HCET
Hemispheric Center for
Environmental Technology
environment • energy • information technology

dme CORPORATION

Final Report

FIU/DME COOPERATIVE AGREEMENT

AGREEMENT # 2001-G-039

Prepared for: DME Corporation

Under Subcontract NO. 52171

Prepared by:
Hemispheric Center for Environmental Technology
Florida International University

February 7, 2003

HCET Hemispheric Center for Environmental Technology
environment • energy • information technology

FIU/DME COOPERATIVE AGREEMENT

AGREEMENT # 2001-G-039

SUBCONTRACT NO. 52171

List of Deliverables:

Electrical Circuit Analysis Sequence Flasher Unit	(April 1, 2002)
Mechanical/Thermal Analysis Sequence Flasher Unit	(April 23, 2002)
Mechanical Design and Analysis Halogen Light Bar	(April 29, 2002)
Supplemental Report Halogen Light Bar	(July 10, 2002)
Design Verification Test (DVT) Final Report	(February 7, 2003)
Close Out Letter	(February 11, 2003)

HCET Hemispheric Center for Environmental Technology
environment • energy • information technology

Electrical Circuit Analysis
Sequence Flasher Unit

for DME Corp.

April 1, 2002

Hemispheric Center for Environmental Technology
Technology Development, Integration, and Deployment Group

Table of Contents

Section **Page**

1 Introduction.....3

2 Sequence Flasher Circuit Analysis.....3

2.1 Mathematical Analysis of Intensity Control circuit.....3

2.2 Mathematical Analysis of Pulse Width Time.....5

2.3 Mathematical Analysis of Voltage Regulation Circuit.....10

2.4 Transient Sweep Analysis.....12

2.5 Monte Carlo Analysis.....25

3 Recommendations and Conclusion.....29

1 Introduction

The overall objective of this project is to test a new low cost approach lighting system (LCALS) that will replace existing FAA MALRS Category 1 ALS. FIU-HCET has performed electrical circuit analysis on the Sequence Flasher Assembly.
The circuit analysis task consists:

1. Mathematical calculation.
2. Software simulation

The task required re-entering the schematics for the sequence flasher into Orcad Capture format in order to do the simulation. This report will discuss the electrical circuit analysis of the Sequence Flasher Assembly and the software simulation. Plots of the system's performance and response were generated using Orcad's Probe software.
The following were the changes provided by DME during our meeting on March 20, 2002.

1. Fix schematic errors. Please see Figures 4, 5, 6, and 7.
2. Incorporate change from 10 μF to 100 μF to capacitors C1, C2, and C9. Also change of input connection to voltage regulator circuit Figure 7.
3. Simulate the current through resistor R37 at three different times in current clamp circuit Figure 7. Please see Figures 26, 27 and 28. Calculate the total current from 15V power supply. Please see Table 1.

2 Sequence Flasher Circuit Analysis

The sequence flasher circuit analysis contains three parts. The mathematical analysis, the transient sweep analysis, and the Monte Carlo analysis. These three parts are essential in receiving accurate results. The three parts also helped us with recommendations that were needed to achieve the desired output parameters given to us by DME.

2.1 Mathematical Analysis for Intensity Control Circuit

Mathematical calculations were generated to find the voltage (see Figure 1) between CR13 and C2. For component values and locations refer to the schematic Figure 1 and Figure 2. When the input is in the positive cycle, the input charges C2. This input also travels through R1, R2, pin 1, pin 2 and ground. To calculate the highest voltage between CR13 and C2 we use the voltage divider equation.

$$V_o = V_i * R_2 / R_2 + R_1$$

Plugging in the values for the variables above we get:

$$(120-1)*300/(6.9k+300)+1 = 4.95 \text{ V}$$

The voltage is 4.95 V after an unlimited charge time on C2. We then calculated the RC cycle time: R1 * C2 = 6.9 ms, and we calculate the AC cycle time: 1 / 60 Hz = 16 ms. The half AC positive cycle time is 8ms. Since it takes 6.9 ms to charge C2 and the half positive cycle time is 8 ms, then C2 is fully charged. To find the highest current we used Ohm's Law, V = IR. The highest current through R2 is:

$$(5 - 1.1) / 300 = 13 \text{ mA}.$$

It appears that CR13 is used for protection in case the voltage rises above 16 volts.

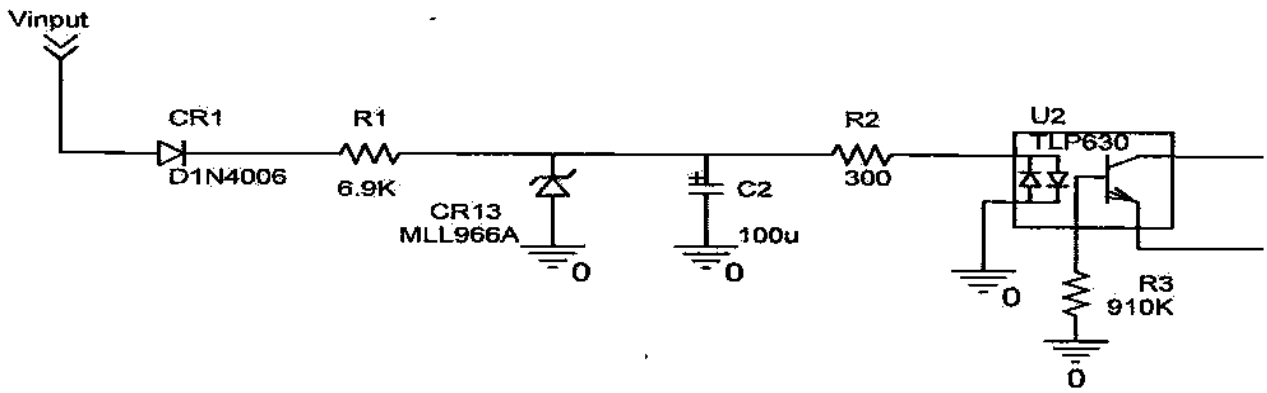

Figure 1 : V_{input} into optp-coupler U1

To increase the current on R2 to 20mA, we must decrease the value of R1, that will raise the voltage between CR13 and C2, and also C2 will charge faster.
When the input is in the negative cycle, it is disconnected by CR1. C2 begins to discharge through R2, and U1. The discharge circuit is shown below:

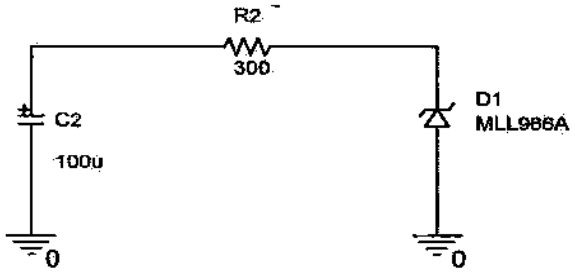

Figure 2: Discharge Circuit

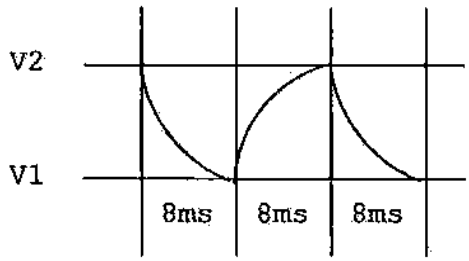

Figure 3: High and low voltage discharge from capacitor C_2

Opto-coupler U1 is simplified as a zener diode, and the voltage across the zener diode is 1.1V. There is no resistor for U1.

Figure 3 represents the discharge of capacitor C_2 with V2 being the high voltage and V1 being the low voltage. In Figure 3 the half cycles are 8 ms. The following calculation is for the voltage ripple entering opto-coupler U1. Please compare the calculated values to Figure 11.

1. $V_1 = V_2 e^{-t/R_2C_2}$; $t = 8$ ms $R_2C_2 = 30$ ms

   $V_1 = 0.76V_2$

Suppose we take C_2 out and calculate the voltage shown in circuit Figure 1.

$V_a = V_{input} * (300/300 + 6900) + 1.1V = 6V$.

The six volts is for the AC cycle time 16 ms.

Now since we are calculating the negative half cycle (8 ms) for discharge, the voltage is now three volts.

In the following equation for V_2 we will use the 3V .

2. $V_2 = V_1 + 3(1 - e^{-t/R_2C_2})$; t = 8 ms $R_2C_2 = 30$ ms

   $V_2 = V_1 + 3 * 0.26 \quad = V_1 + 0.78V$

Now substituting equation two into equation one we get $V_2 = 3.2V$ and $V_1 = 2.4V$.
This will ensure that the opto-coupler will remain on all the time.

2.2 Mathematical Analysis of Pulse Width Time

Mathematical calculations were generated to obtain the pulse time for the three different intensity circuits. The pulse time was calculated using the pulse width equation for a resistor-capacitor circuit. The equation is:
Pulse time (T) = 1.1 x Resistor (Req) x Capacitor (C).
For the low intensity circuit we calculate the resistor value for the equation using resistors R29, R32, R33, R34, and R35 in parallel. For the capacitor value we will use capacitor C6. The equation to calculate resistors in parallel is:

$$\frac{1}{Req} = \frac{1}{R35} + \frac{1}{R34} + \frac{1}{R33} + \frac{1}{R32} + \frac{1}{R29}$$

$$\frac{1}{Req} = \frac{1}{68.1K} + \frac{1}{56.2K} + \frac{1}{15K} + \frac{1}{56.2K} + \frac{1}{15K}$$

$$\frac{1}{Req} = .0001836$$

$Req = 5.45K\Omega$

By plugging in Req into the equation for pulse time we obtain:

$T = 1.1 * Req * C6$ or $T = 1.1 * 5.45K * 0.1\mu F$

$T = 0.6$ ms

Figure 4 shows the resistors in parallel and C6 for the low intensity lighting circuit.

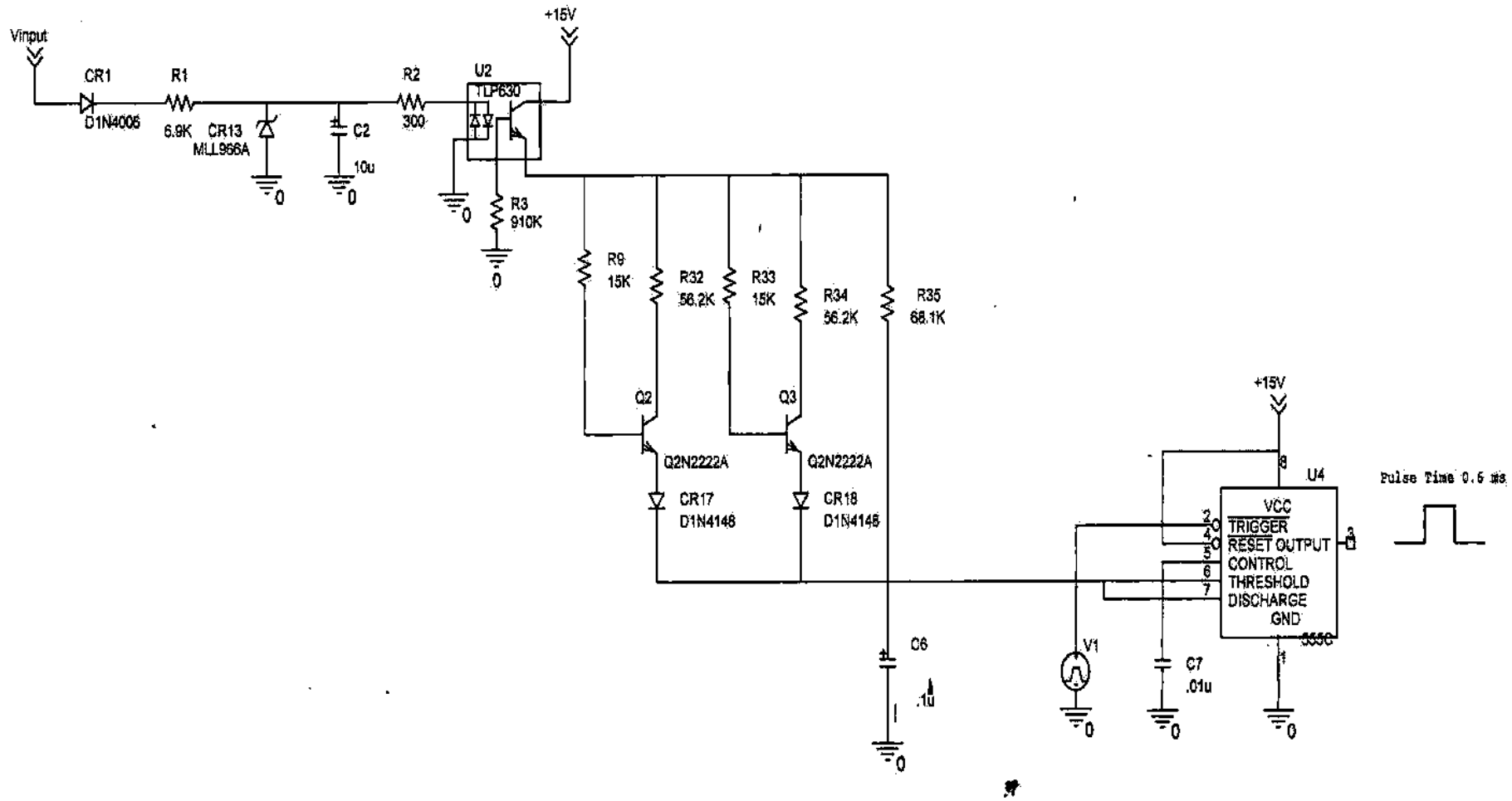

Figure 4: Resistors and capacitor used to generate the pulse width time for the low intensity lighting circuit.

For the medium intensity lighting circuit, we again use the same pulse time equation $T = 1.1 * Req * C$.
First we have to calculate the resistor value for the pulse time equation. The resistors in parallel for the medium intensity lighting circuit are R33, R34, and R35. By using the resistors in parallel equation:

$$\frac{1}{Req} = \frac{1}{R35} + \frac{1}{R34} + \frac{1}{R33} \text{ or}$$

$$\frac{1}{Req} = \frac{1}{68.1K} + \frac{1}{56.2K} + \frac{1}{15K}$$

$$\frac{1}{Req} = .000099144$$

$Req = 10.1K\Omega$

By plugging in Req into the equation for pulse time we obtain:

$T = 1.1 * Req * C6$ or $T = 1.1 * 10.1K * 0.1\mu F$

$T = 1.1$ m

Figure 5 shows the resistors in parallel and C6 for the medium intensity lighting circuit.

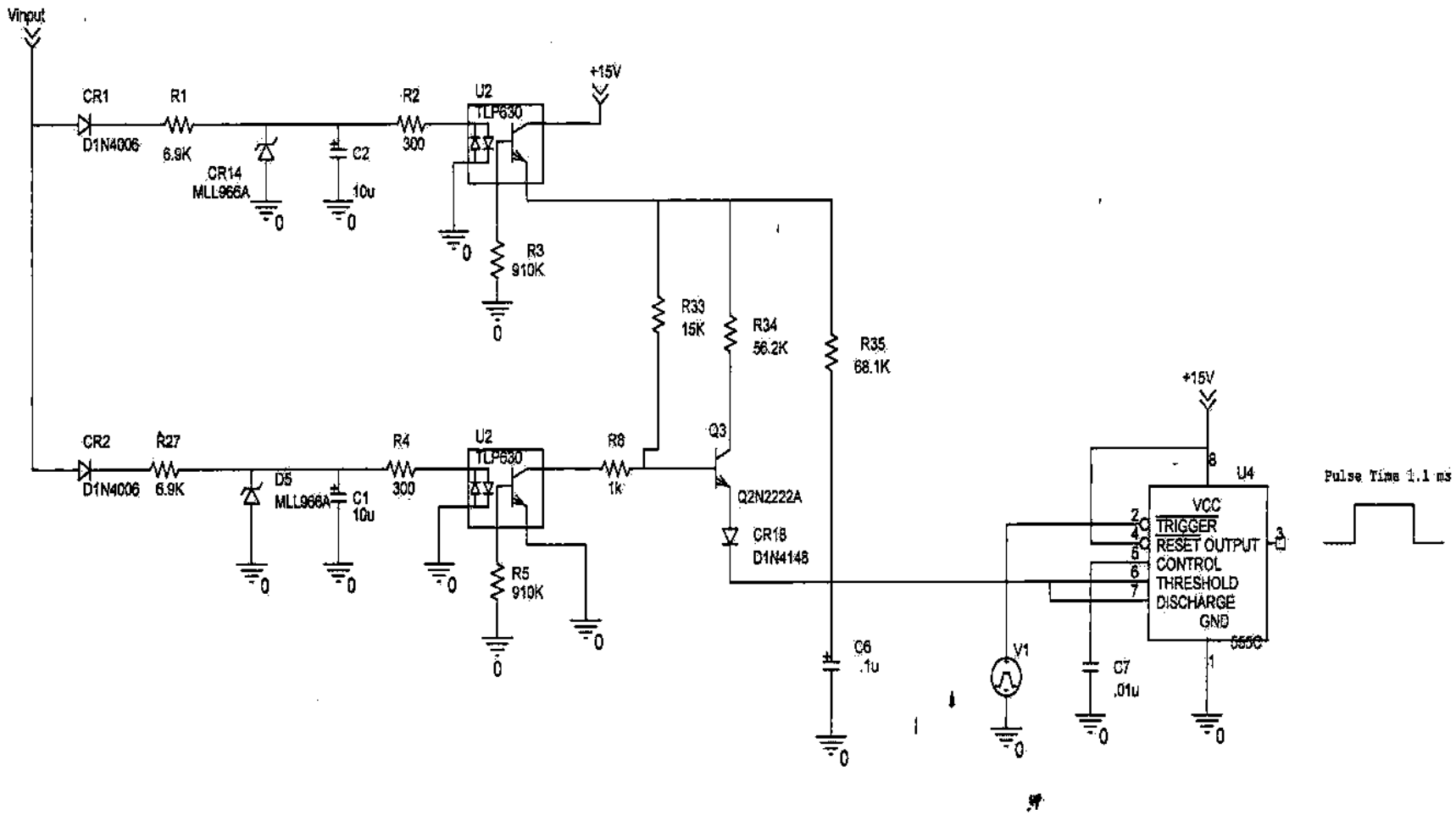

Figure 5: Resistors and capacitor used to generate the pulse width time for the medium intensity lighting circuit.

For the high intensity lighting circuit, we again use the same pulse time equation
T = 1.1 * Req * C.
First we have to calculate the resistor value for the pulse time equation. The Req for the high intensity lighting circuit is 68.1KΩ. Plugging in value for Req into the equation for pulse time we have:
T = 1.1 * Req * C6 or T = 1.1 * 68.1 K * 0.1μF

T = 7.49 ms

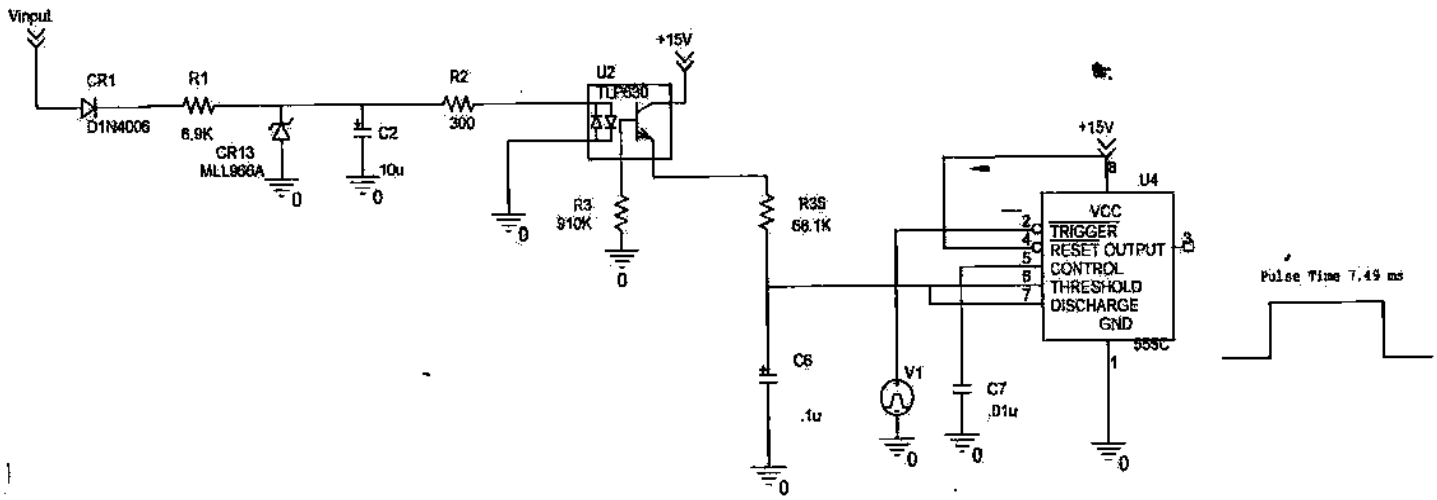

Figure 6 shows the resistor and capacitor for the high intensity light.

Figure 6: Resistor and capacitor used to generate the pulse width time for the high intensity lighting circuit.

2.3 Mathematical Analysis of Current Clamp Circuit

The current clamp circuit takes the input voltage of 120 VAC and feeds it to the halogen bulb of the sequence flasher circuit. For this part of the report we have calculated the values for the voltages of the circuit. For component values and locations refer to the schematic Figure 7. To better understand the calculations derived with the circuit, letters have been placed (A through G) to show the change in voltages.

We start with showing the voltage at point A. When the input (120 VAC, 60 HZ) is at its rising positive cycle, A is positive. The voltage here depends on the load from capacitor C100.

At point B we will use the reference voltage, 2.5 volts, from the regulator diode U8. By using Ohm's law we calculate:
(2.5 / 4.22K) * (732K + 12.1K + 4.22K) = 445 volts.

Since point B is 445 volts, then the regulator diode U8 is off. On the other hand opto-coupler U7 is on. Point A and point F are not connected when point A is in the positive cycle. This is due to diode CR8. When A is in the negative cycle, points F and G are connected. This connection raises the voltage at point A, otherwise it may drop to –500 volts. We can prove this by deleting diode CR8 from our circuit. Now we have Triac Q1 on with resistors R17 and R18. The low resistance at point F (from R17 and R18) gives us zero volts at point A. The zero voltage is when point A is in its negative cycle. Voltage regulators VR3, VR4, and VR7are used to keep the voltage at point C below 11 volts.

To find the voltage at point D we will use Ohm's Law:

(11 / 4.22K) * (4.22K + 12.1K) = 2.8 volts

The 2.8 volts from the equation above protects the regulator diode U8. The overall function of the circuit is to raise the voltage at point A to zero volts when point A is at its negative cycle.

R100, CR100, and C101 are the discharge path for the L100 inductor. The inductor does not like the direct connection to ground.

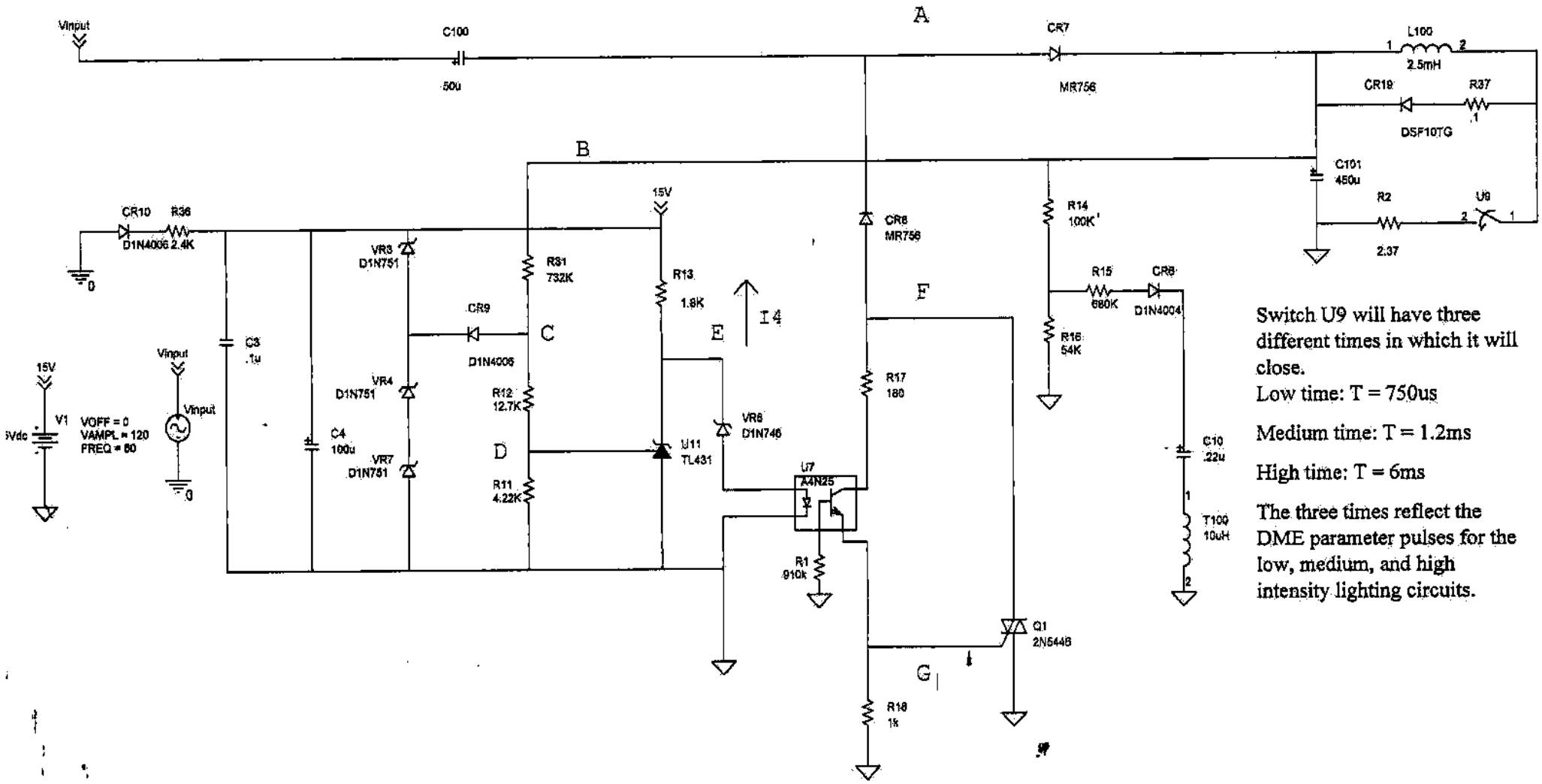

Switch U9 will have three different times in which it will close.

Low time: T = 750us

Medium time: T = 1.2ms

High time: T = 6ms

The three times reflect the DME parameter pulses for the low, medium, and high intensity lighting circuits.

Figure 7: Current Clamp Circuit

2.4 *Transient Sweep Analysis*

The transient sweep analysis uses the component values for the original circuit. For component values and locations refer to the schematic Figure 14, Figure 16, and Figure 18. HCET recommended in its initial analysis to reduce the value of R2, R4 and R6. These new values for the mentioned resistors were given to us by DME. The original value for R2, R4, and R6 decreased from 1KΩ to 300Ω. Also resistor values R1, R26, and R27 are revised by DME to lower values. The resistors decreased from 10KΩ one watt to 6.9KΩ one watt. Another change by DME was to capacitors C1, C2, and C9. The value was changed from 10 μF to 100 μF. For figure 1 the resistor values for R3, R5, and R25 is 910KΩ. In order to simulate this circuit, the base of the opto-couplers (pin 6) cannot be floating. Therefore large resistor values (910KΩ) were placed at that pin to the ground. Also we changed resistor R23 from 1MΩ to 910KΩ. We did this because by using a 1MΩ resistor at opto-coupler U4, we generated no pulse width at the output of opto-coupler (pin 3). During our simulation by changing it to 910KΩ we generated three output pulses that were close to the specified parameters.

All graphs and schematics were generated on Orcad simulation software. First we start with Figure 8 which shows the 120 VAC voltage input. Figure 9 shows the voltage clipped after diode CR1. Figure 10 shows the voltage drop across zener diode CR13. Figure 11 shows the voltage input at pin one of opto-coupler U1. Figure 12 shows the current input at pin one of opto-coupler U1. The next six figures are the sequence flasher circuits at different light intensities, and their corresponding outputs. Figure 14 shows the sequence flasher circuit for low intensity lighting. Figure 15 shows the output pulse of the low intensity lighting circuit. The output pulse is read at pin three of opto-coupler U5, and the square wave is a 1.9 ms pulse. Figure 16 shows the sequence flasher circuit for medium intensity lighting. In Figure 17 we see the output pulse of the medium intensity lighting circuit. The output pulse is given in is read at pin three of opto-coupler U5, and square wave is a 2.5 ms pulse. The last sequence flasher circuit is shown in Figure 18. This circuit is for high intensity lighting. Figure 19 shows the output pulse for the high intensity lighting. The output pulse is read at pin three of opto-coupler U5, and the square wave is an 8.5 ms pulse. The output pulses are transient sweeps that were obtained using Orcad simulation software.

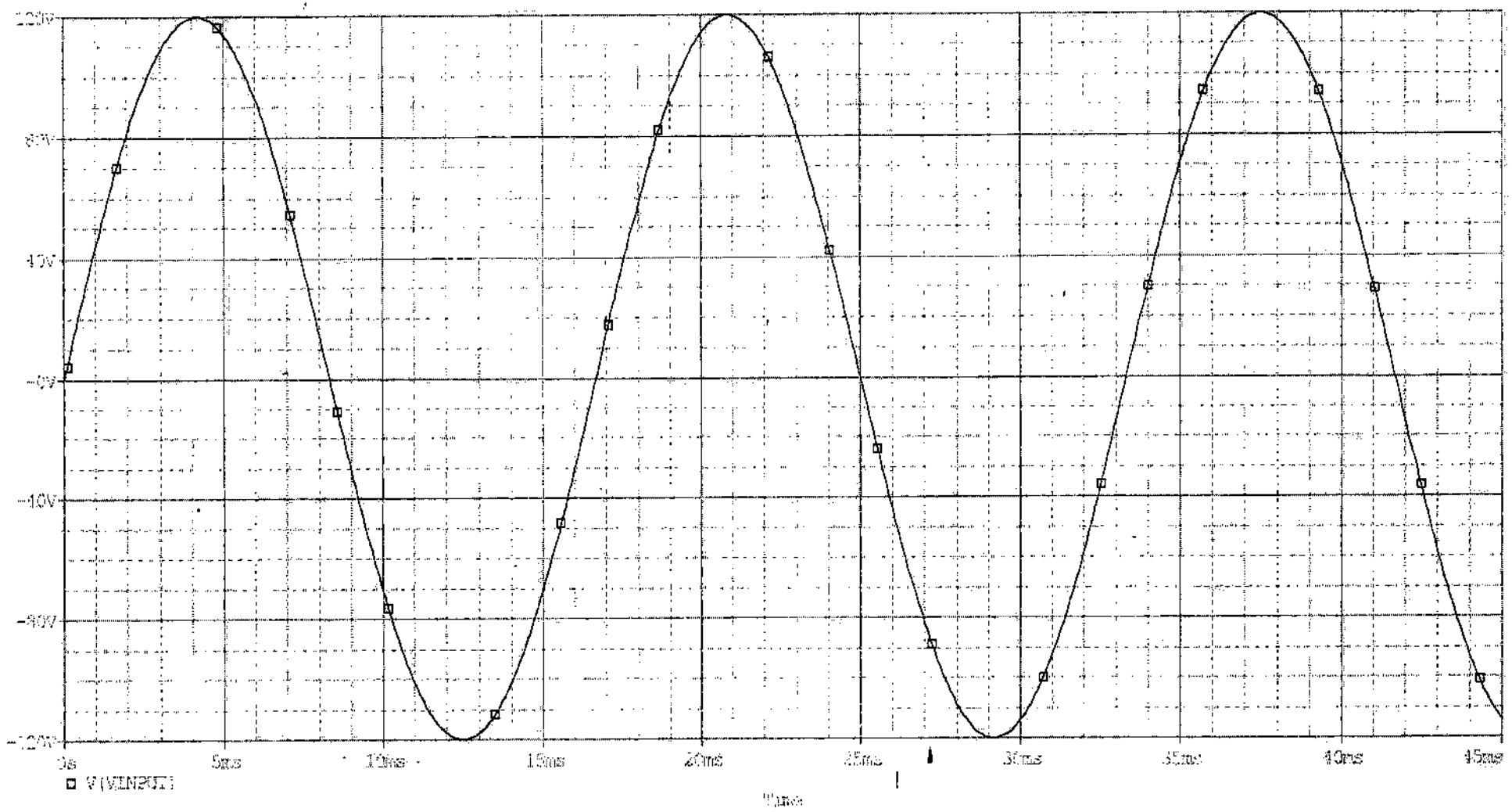

Figure 8: Input voltage 120 VAC/60 HZ at the J2 pins

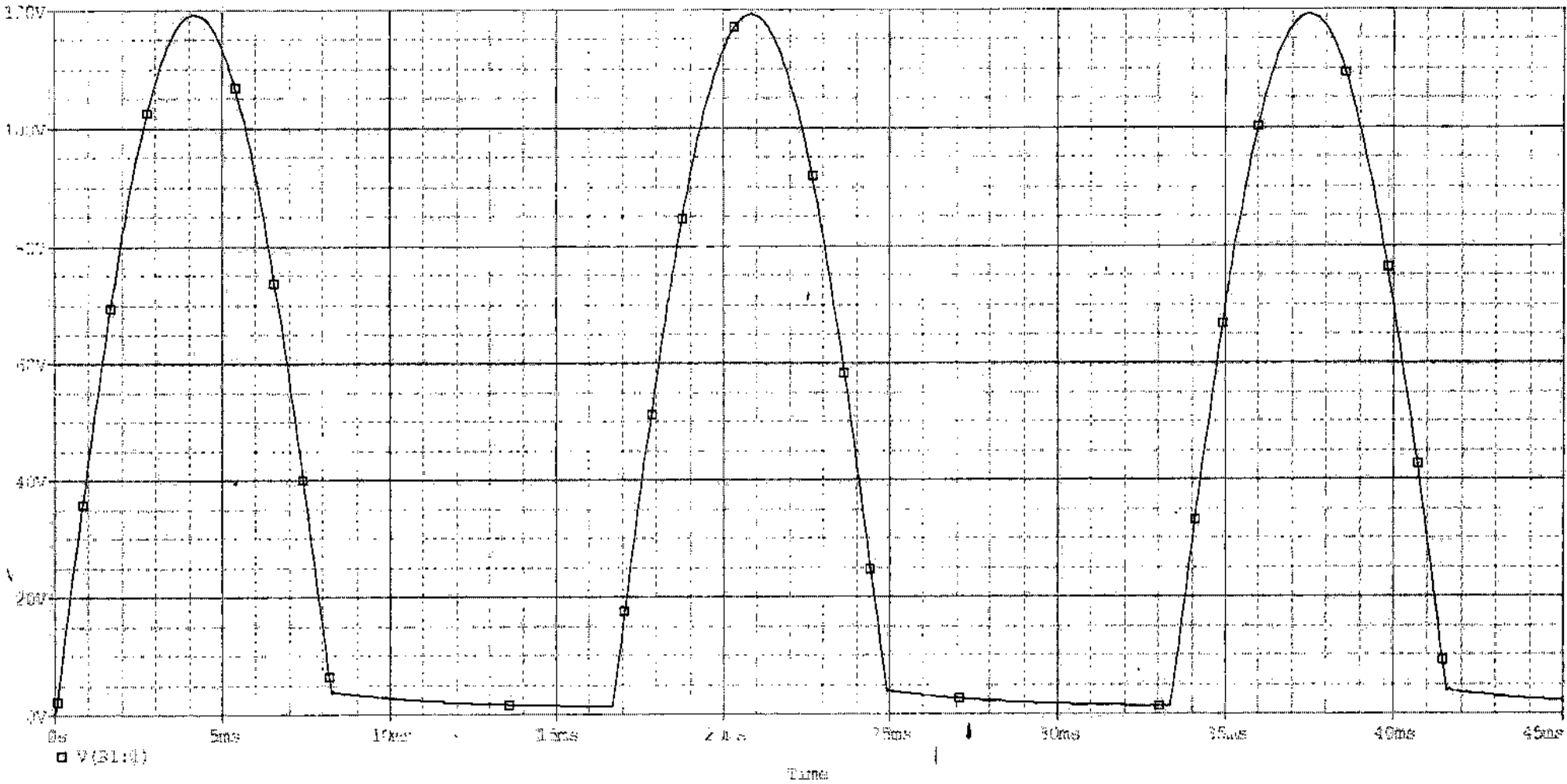

Figure 9: Voltage signal clipped at CR1 diode.

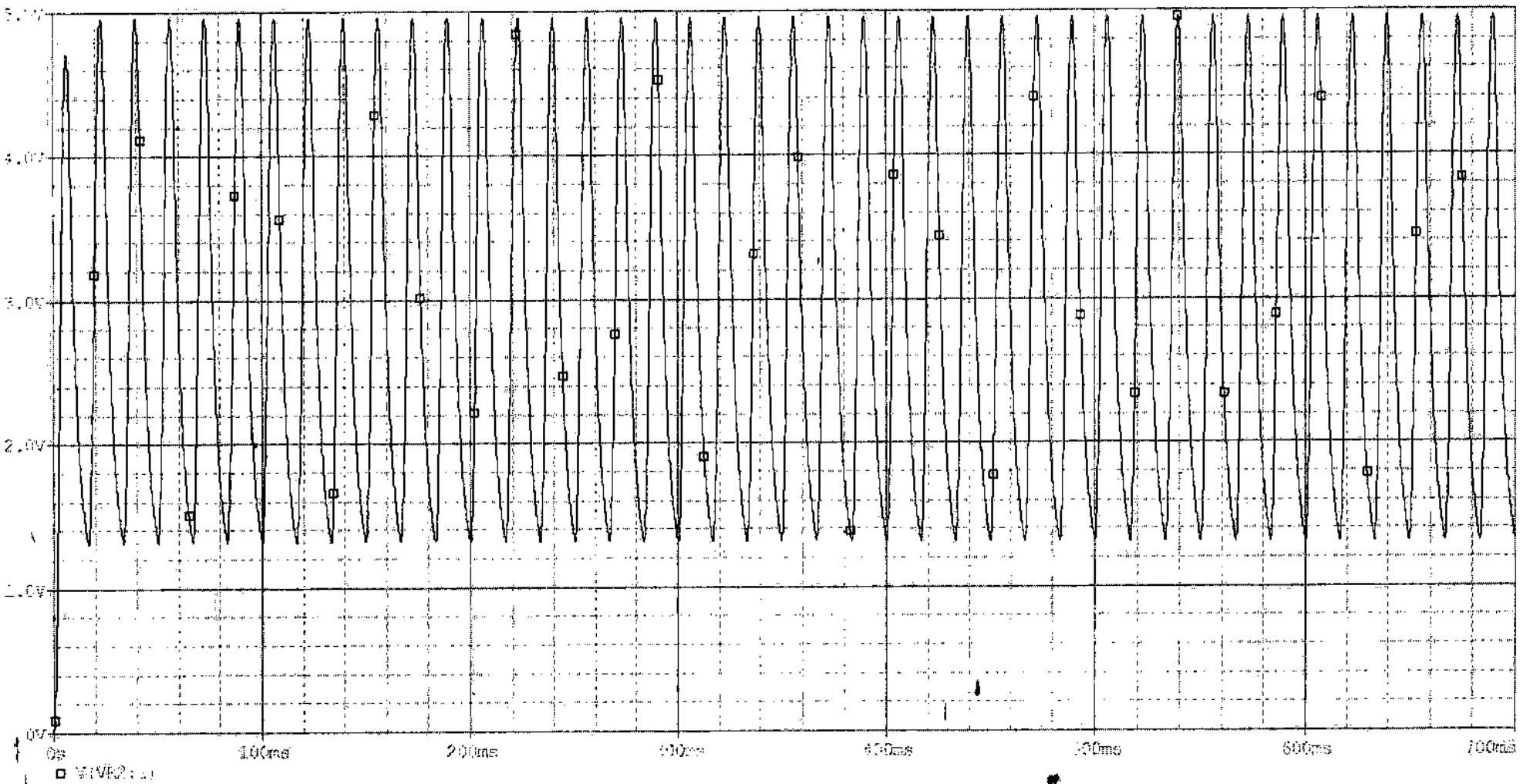

Figure 10: Voltage drop (about 5 volt) at resistor R1 (across CR13)

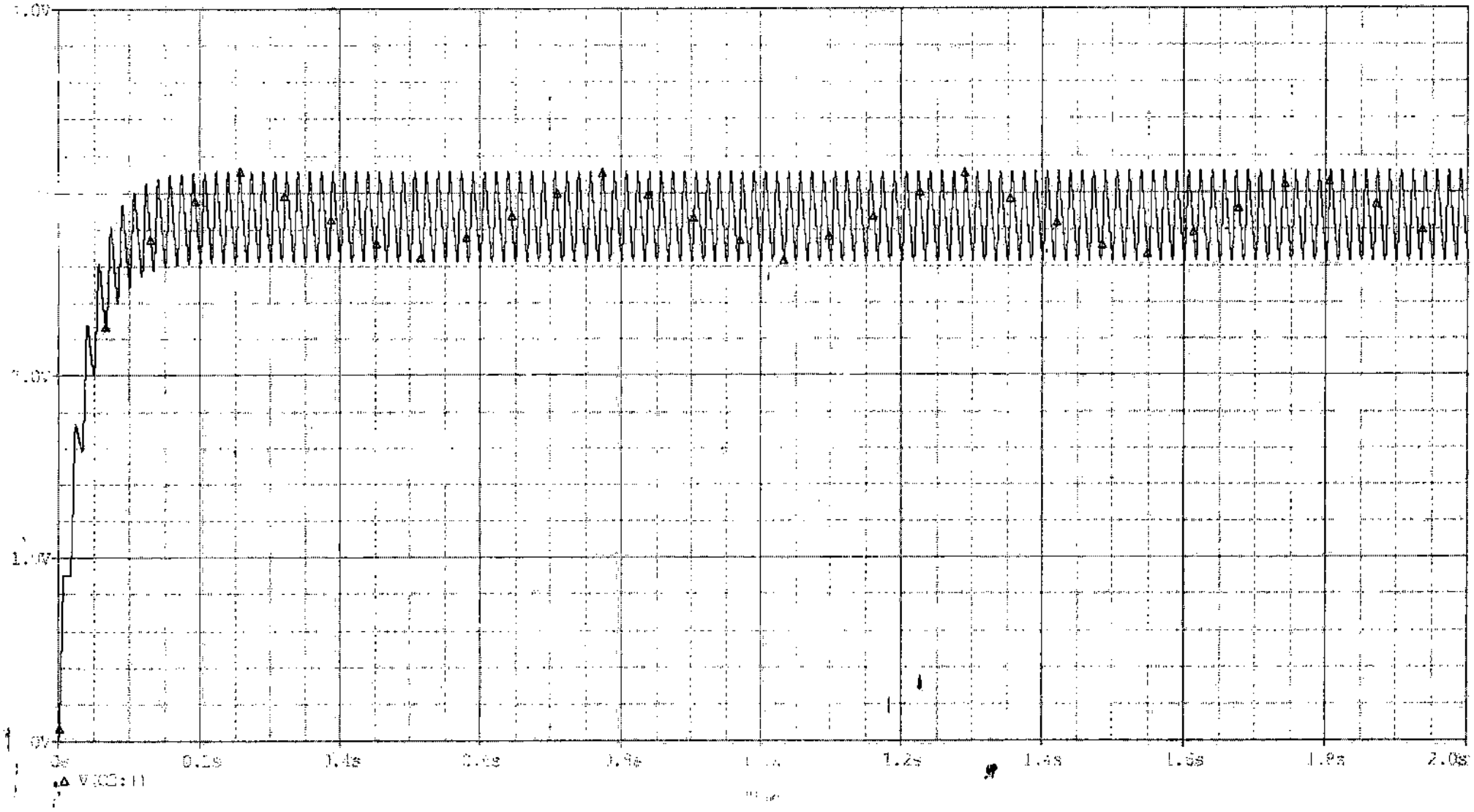

Figure 11: Voltage drop (1.4 volt) across R2 (input pin one of opto-coupler U1).

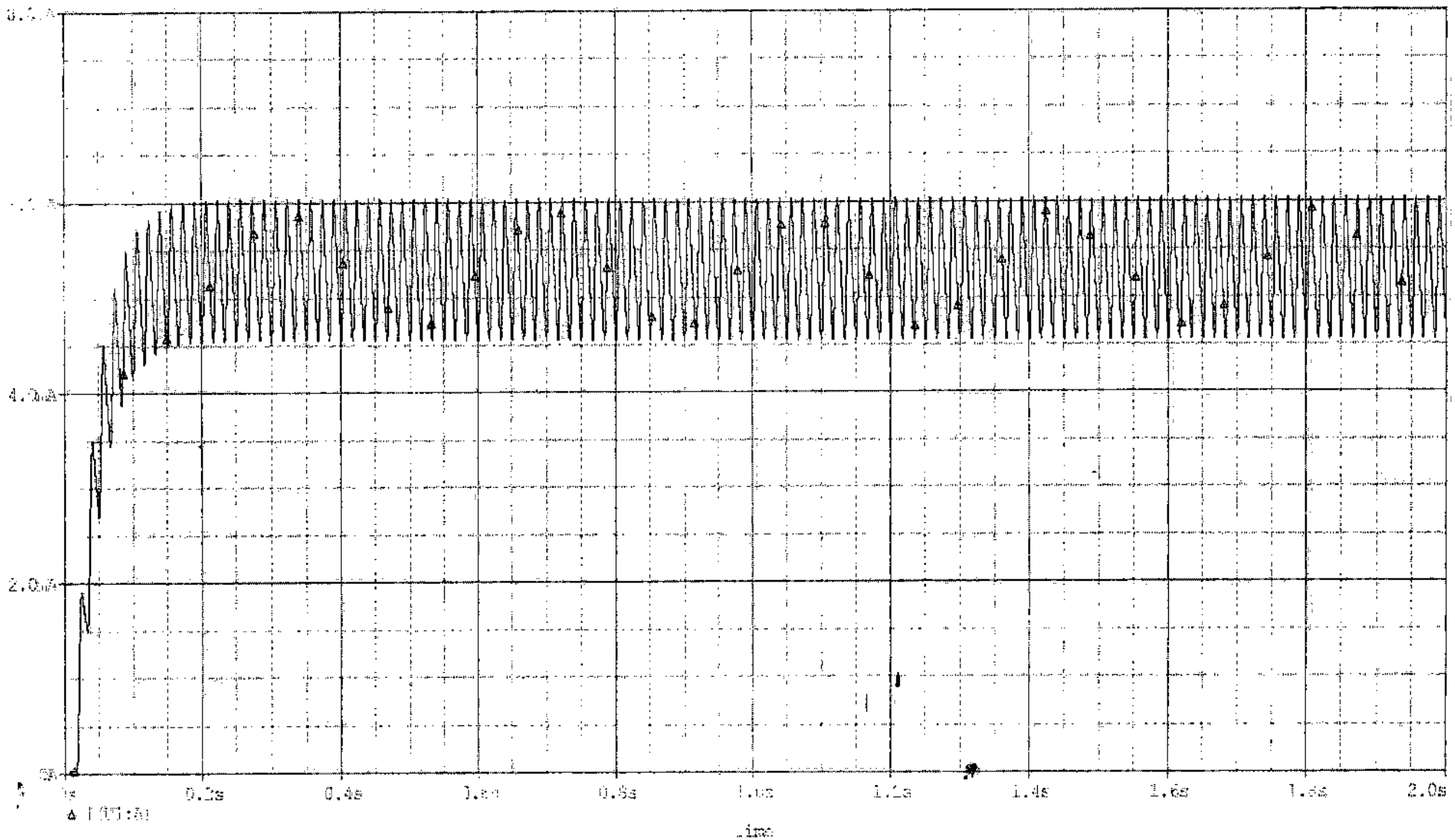

Figure 12: Current through resistor R2 (input current to opto-coupler).

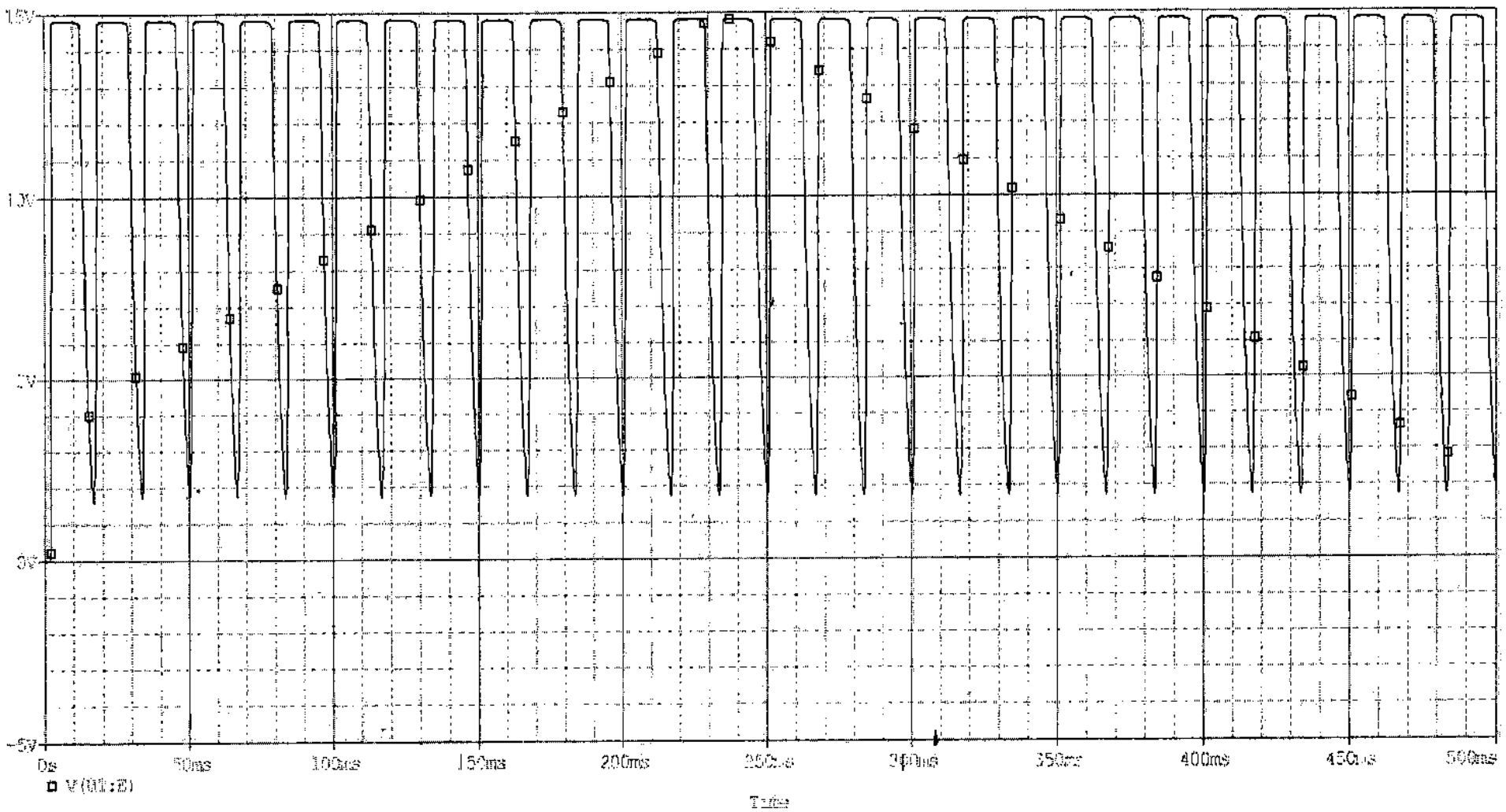

Figure 13: The voltage output at pin four of opto-coupler U1 is 14.8 volts (see schematic for reference designator).

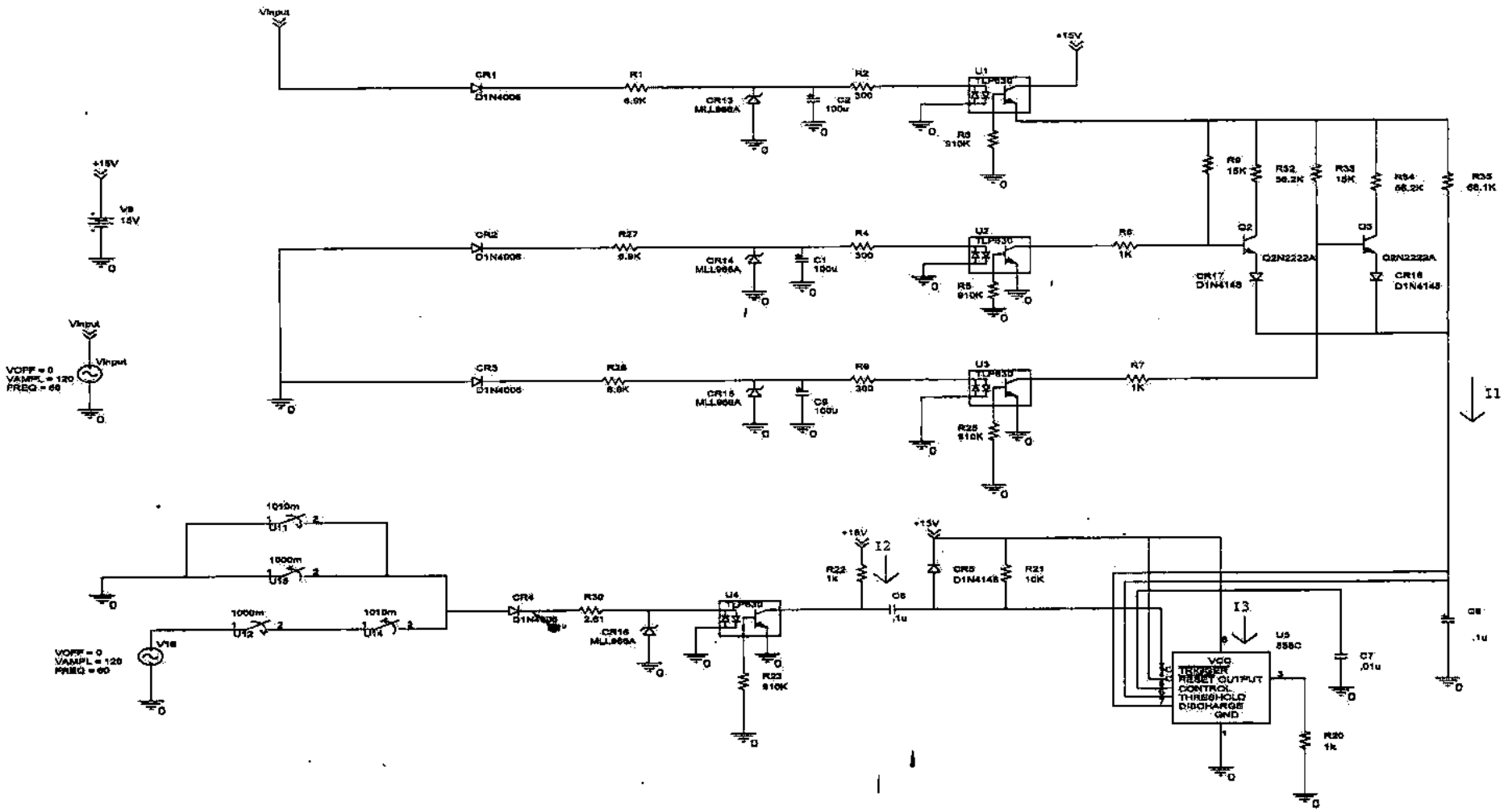

Figure 14: Low intensity lighting circuit

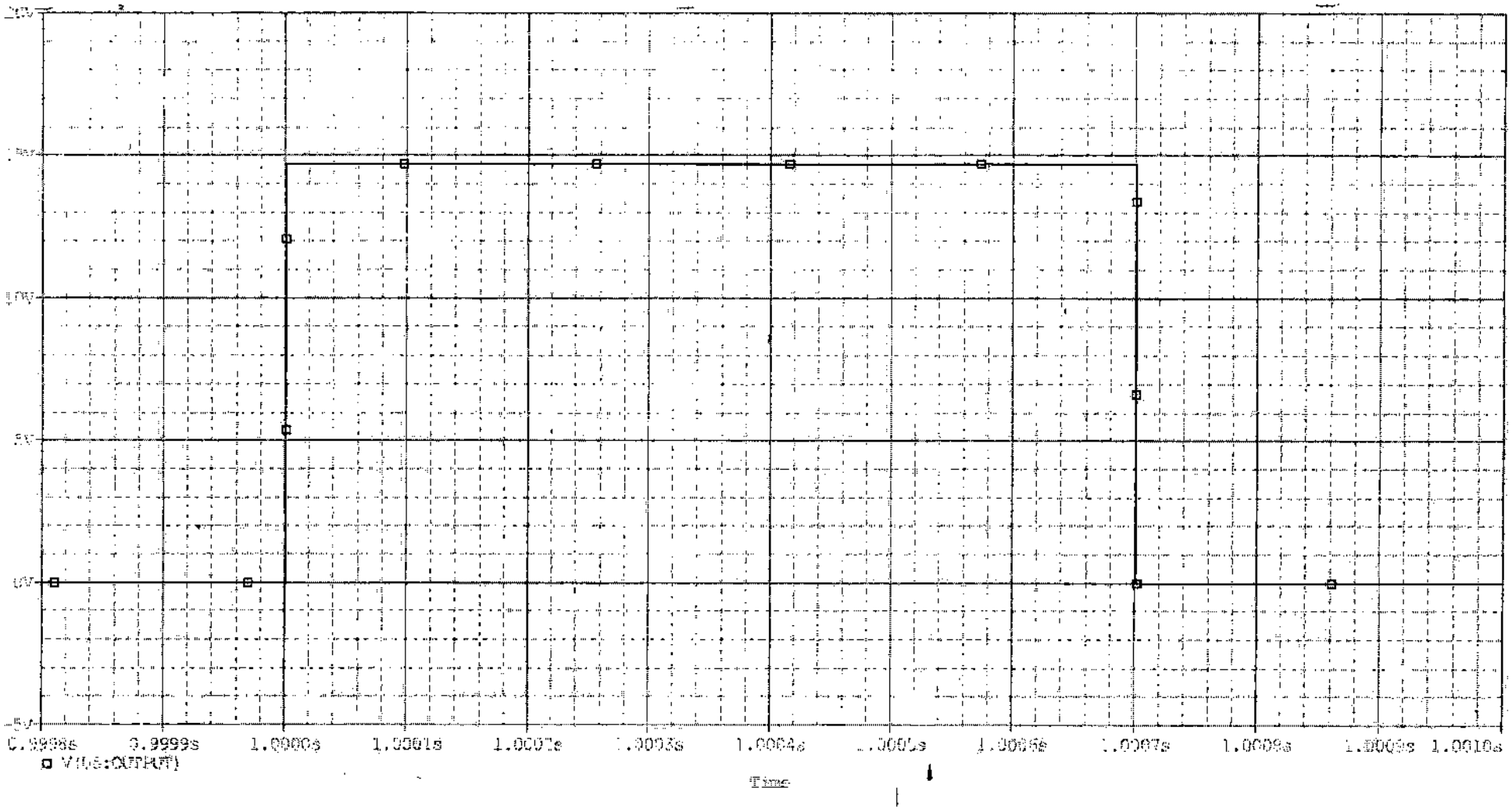

Figure 15: Output pulse for low intensity lighting circuit

The output pulse parameter given to us by DME for the low intensity lighting circuit is between 600 to 700 μs. The output pulse is monitored at pin three of opto-coupler U5, and it measures about 700 μs.

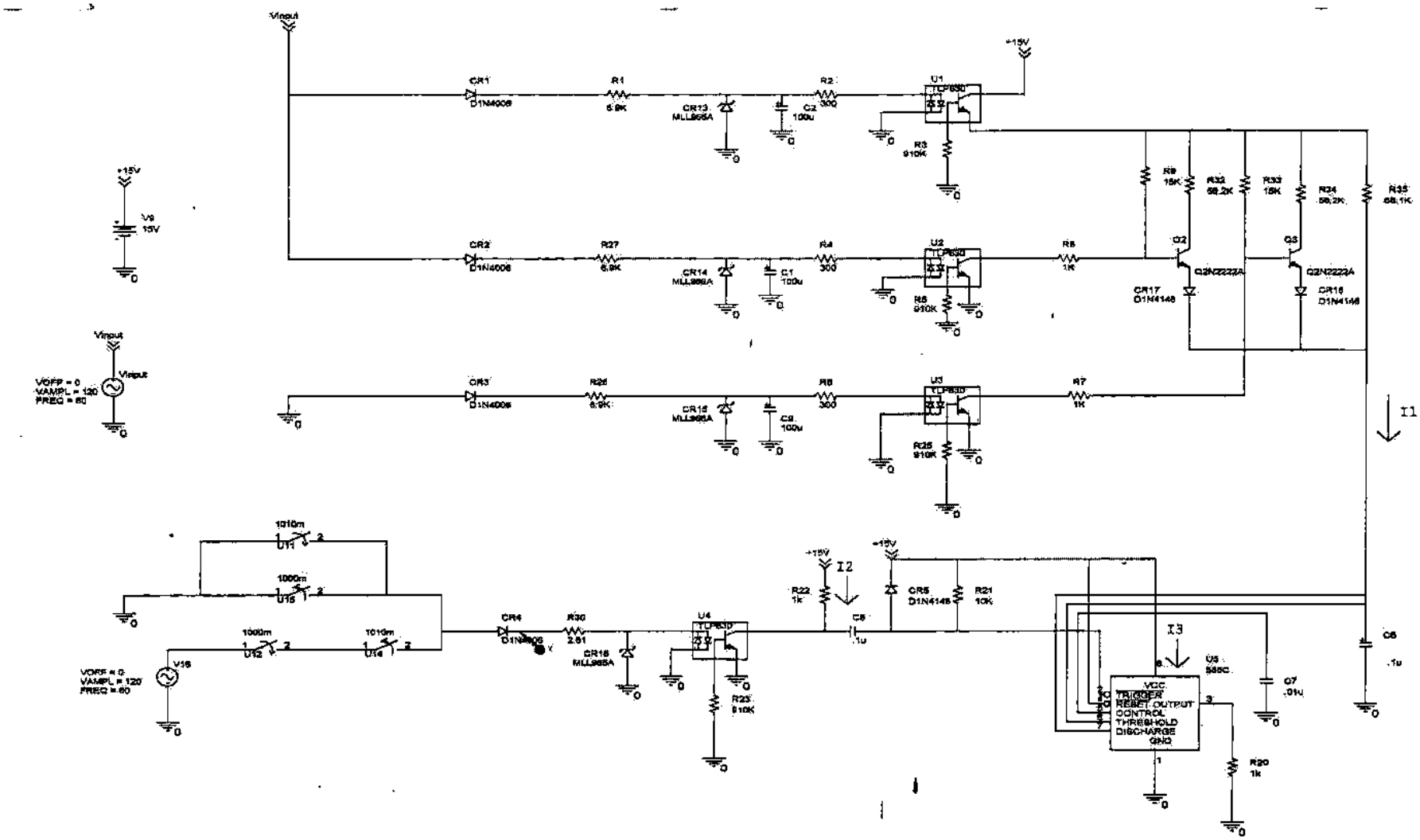

Figure 16: Medium intensity lighting circuit

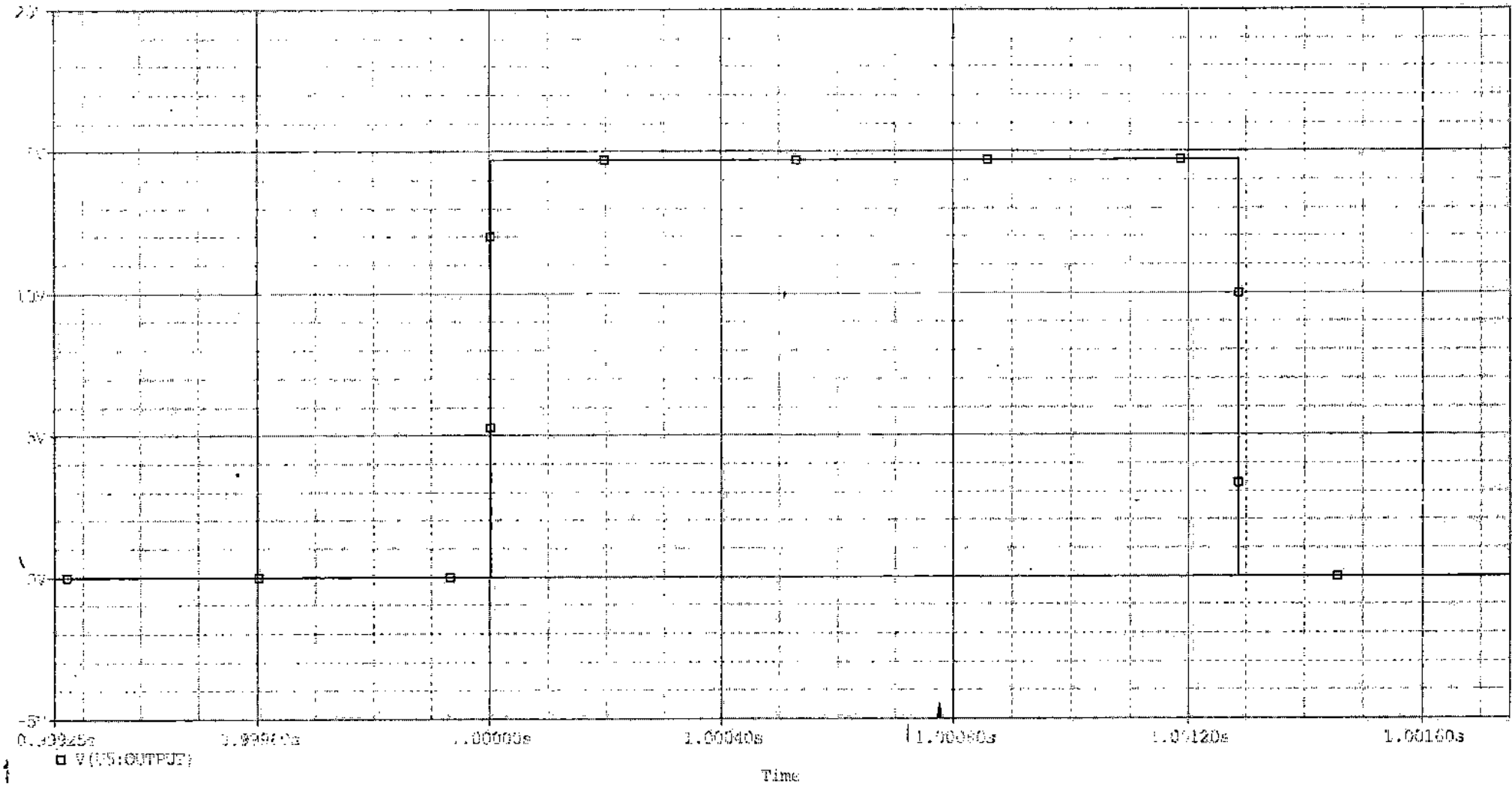

Figure 17: Output pulse of medium intensity lighting circuit

The output pulse is monitored at pin three of opto-coupler U5 (see schematic for reference designator), and the pulse measures approximately 1.3 seconds. The output pulse parameter given to us by DME for the medium intensity lighting circuit is 1.2 ms.

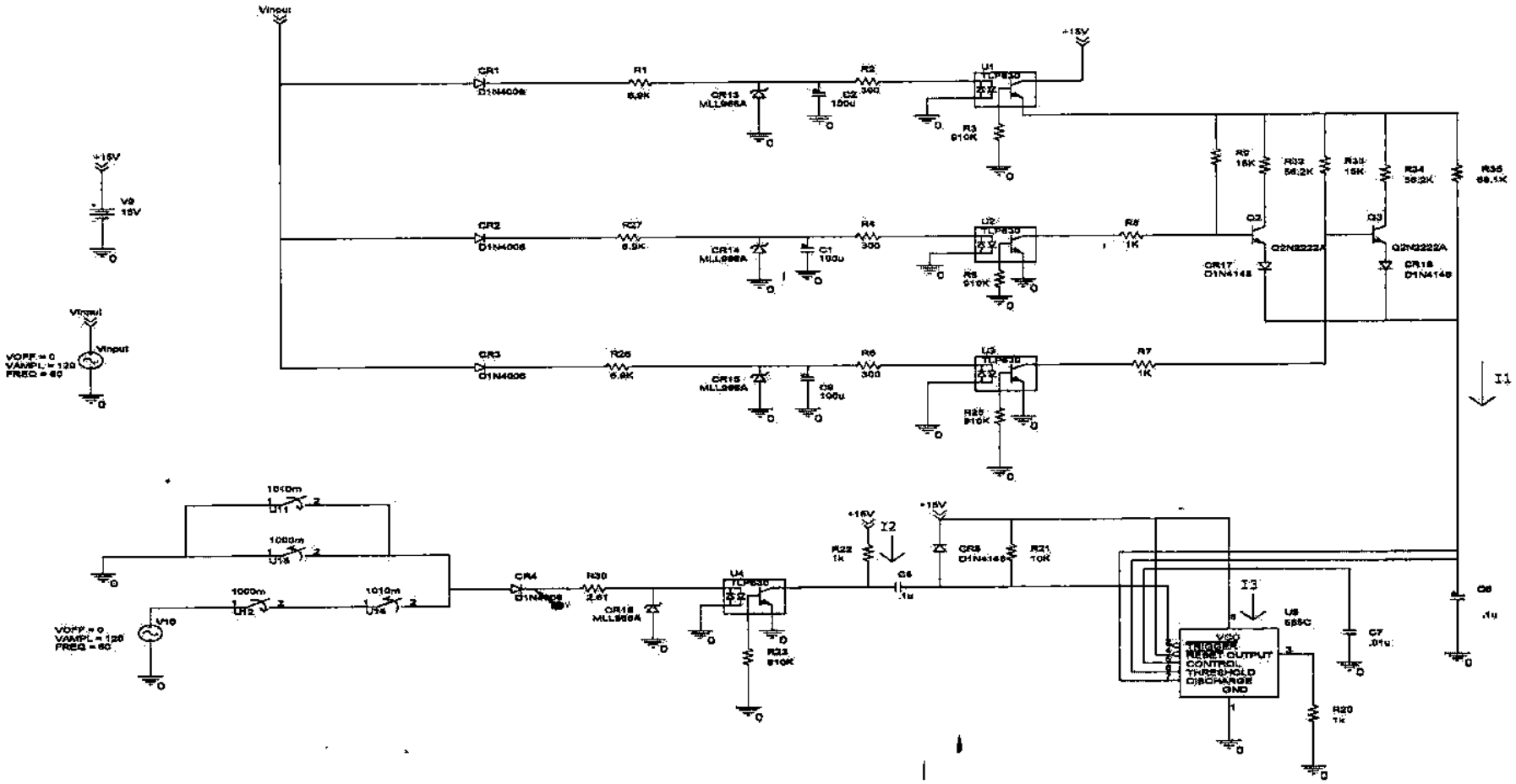

Figure 18: High intensity lighting circuit

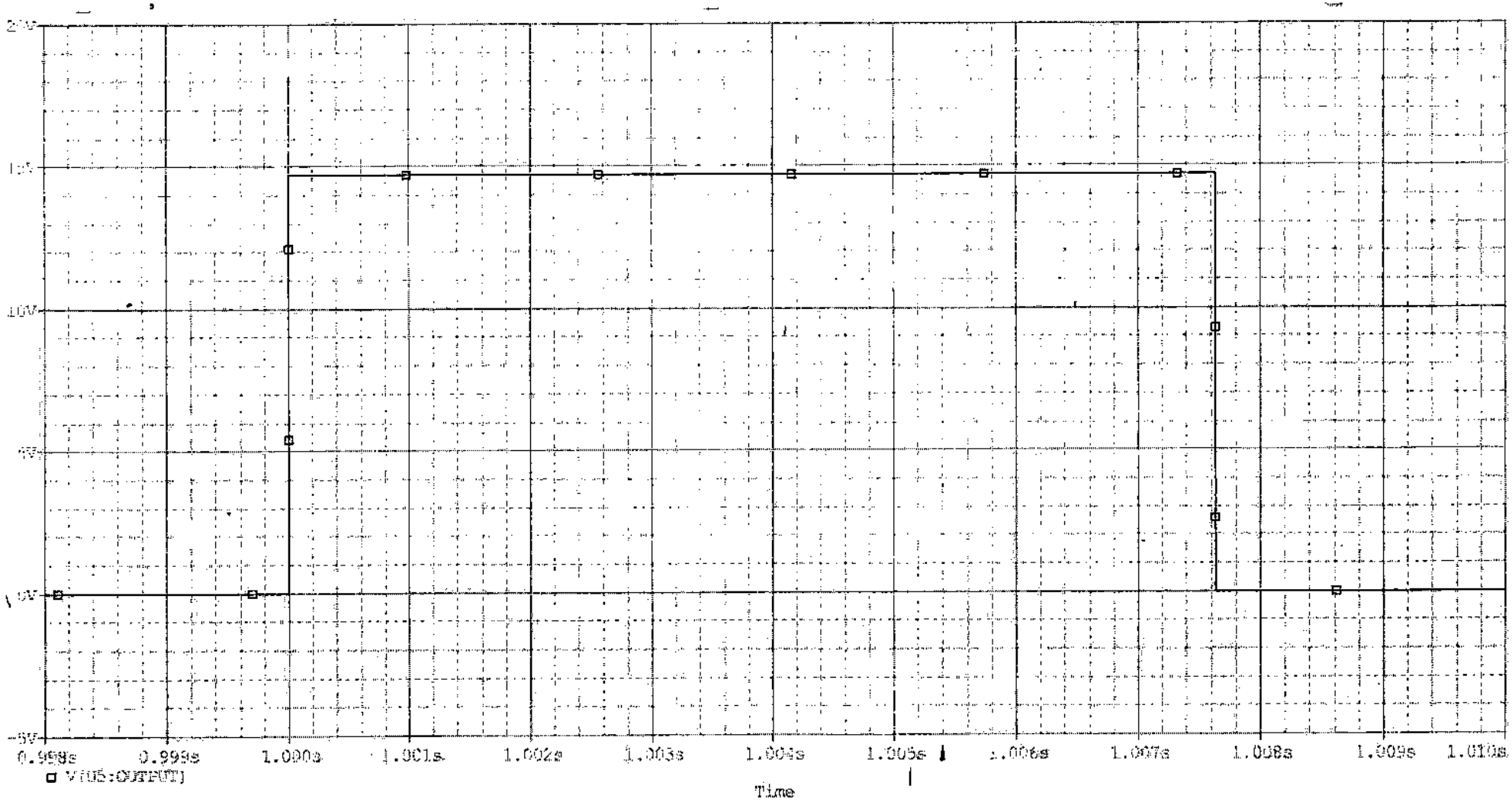

Figure 19: Output pulse of high intensity lighting circuit.

The output pulse is monitored at pin three of opto-coupler U5 (see schematics for reference designator), and the output pulse is 7.6 ms. The output pulse parameter given to us by DME for the high intensity lighting circuit is a 6 ms pulse.

2.5 Monte Carlo Analysis

A Monte Carlo analysis was generated for the three intensity circuits. The tolerances were applied to each resistor and capacitor used. Three traces were simulated to show three different pulses for each intensity lighting circuit. By comparing the transient sweeps (Figure 15, Figure 17, and Figure 19) to the Monte Carlo simulations (Figure 20, Figure 21, and Figure 22) one can view the transient sweep pulse, a pulse close to the transient sweep pulse, and a pulse that is far off from the desired parameters.

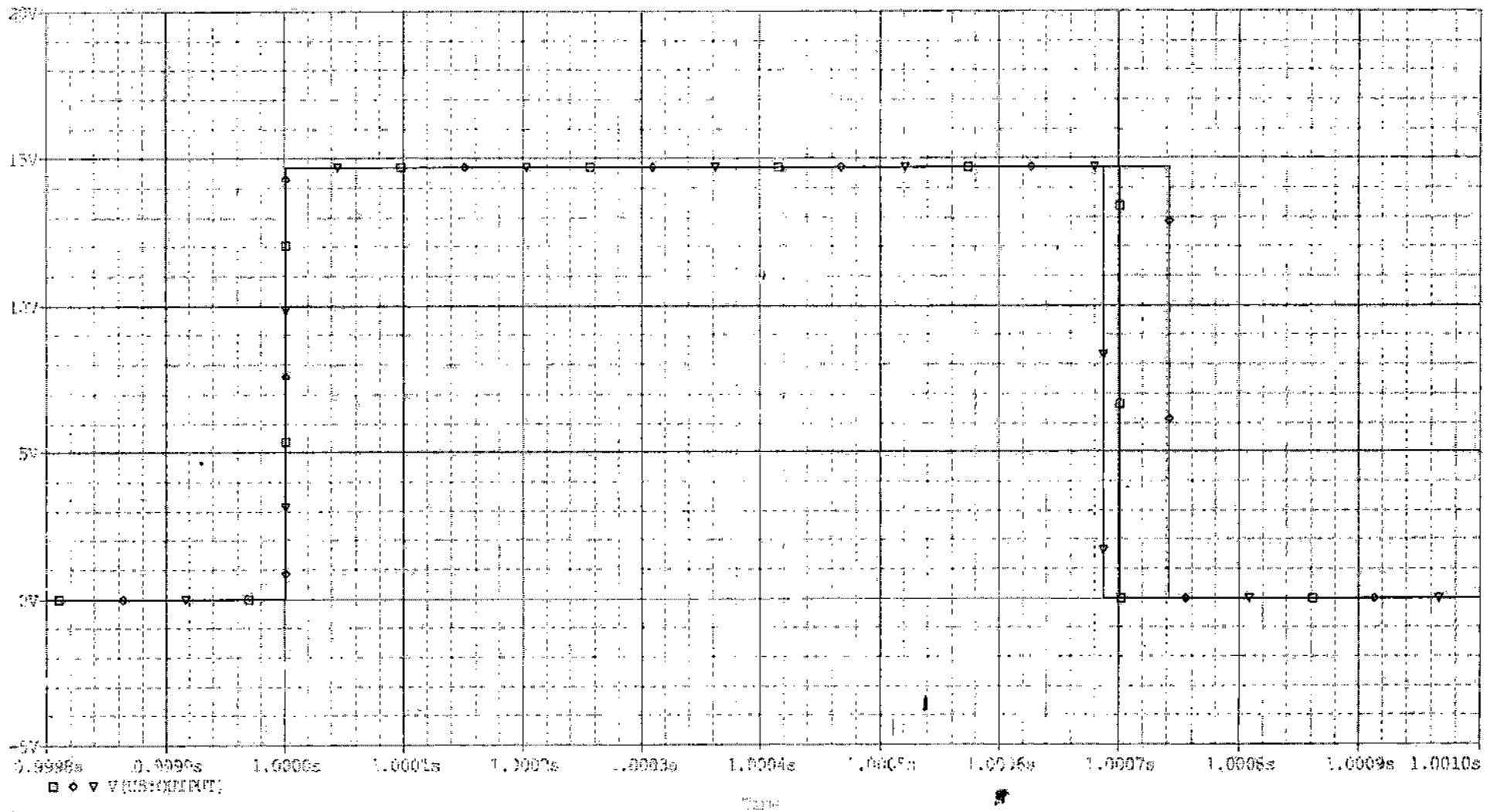

Figure 20: Low intensity lighting circuit Monte Carlo analysis

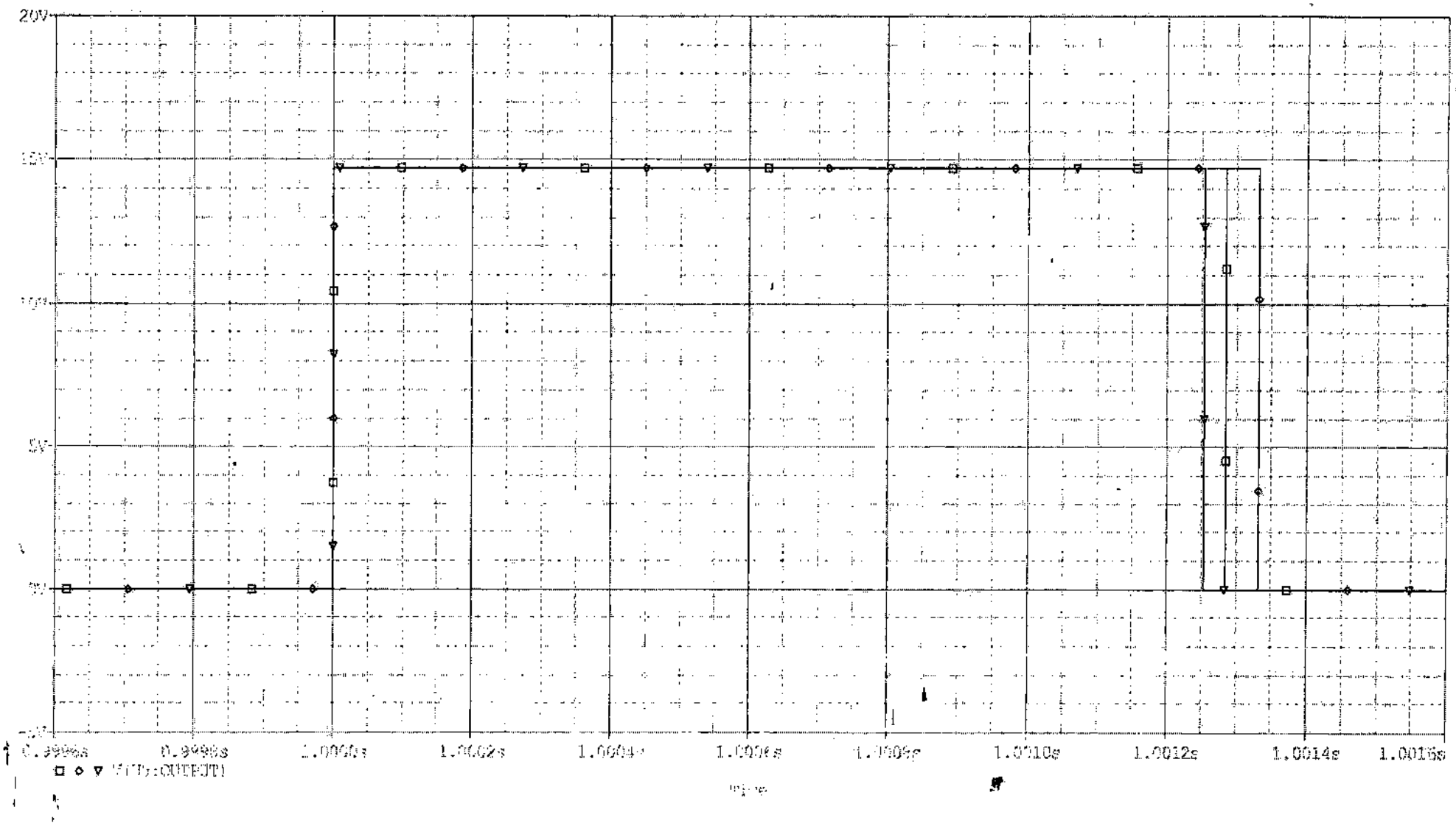

Figure 21: Medium intensity lighting circuit Monte Carlo analysis

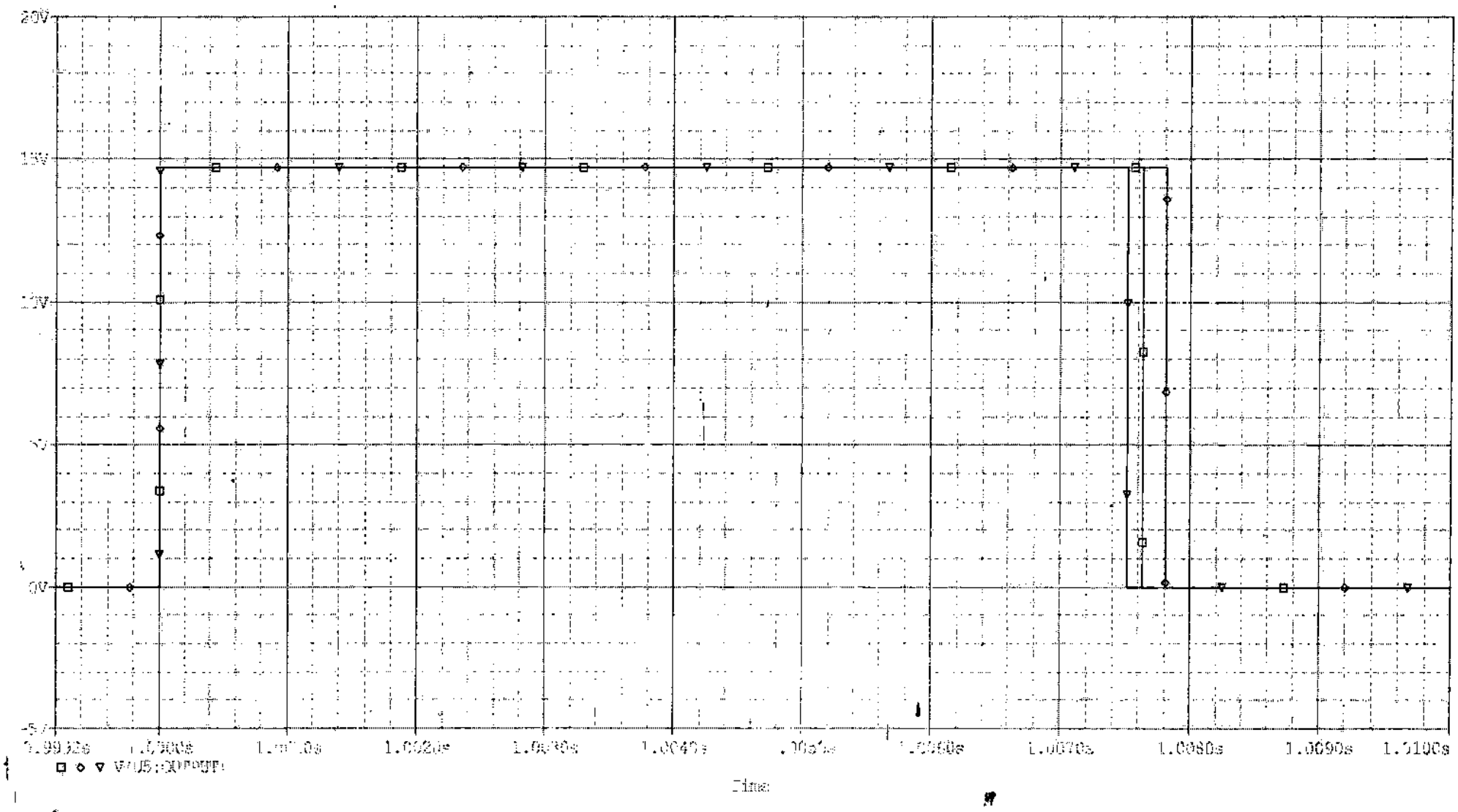

Figure 22: High intensity lighting circuit Monte Carlo analysis

3 Recommendations and Conclusion

To optimize the sequence flasher circuit to the parameters given to us by DME, changes had to be made to the original circuit. All errors were corrected following the meeting at DME on March 20, 2002. On the original circuit the capacitors C1, C2, and C9 were 10 μF, but after the meeting at DME the capacitors to 100 μF. This change caused the current entering the opto-coupler U1 to drop to 6mA. Please see Figure 12 for the simulation. In order to have optimal performance from the opto-coupler the current must be more than 12mA. This is proven in section 2.1 - Analysis for Intensity Control Circuit. DME recommended that we simulate the current through resistor R37 in the current clamp circuit for three different times. This circuit is shown Figure 7. The three different times are the low time (750μs), the medium time (1.2ms) and the high time (6ms). These three times reflect the DME parameter pulses for the low, medium and high intensity lighting circuits. Figures 26, 27, and 28 show the graphs of the currents through resistor R37. Another suggestion by DME was to find the total current drawn from the 15V supply. To find these currents we solved calculations, used datasheets, and verified the values using the Orcad simulation software. Table 1 describes how the currents were found and shows their current values.

FIU-HCET has one recommendation for the sequence flasher circuit. This recommendation is to change resistor R35. Pulse width calculations and transient sweep simulations were performed. First we start with mathematical calculations to find the parameter pulse width for the high lighting intensity circuit. For the high intensity lighting circuit the parameter pulse is a 6 ms pulse. After performing a transient sweep simulation on the high intensity lighting circuit we received a 7.49 ms pulse. By using the pulse width equation T = 1.1 * Req * C with the parameter pulse of 6ms we can generate the correct resistor-capacitor combination to obtain the desired pulse. The following is the calculation for the high intensity lighting circuit:

$$T = 1.1 * Req * C \qquad \text{or} \qquad 6\text{ ms} = 1.1 * Req * .1\mu F$$

Solving for Req we obtain the equation:

$$Req = \frac{6 \times 10^{-3}}{1.1 * .1 \times 10^{-6}} = 54.9\ K\Omega$$

By changing resistor R35 from 68.1 KΩ to 54.9 KΩ, the transient sweep simulation gives us a 5.9 ms pulse. Please refer to Figure 23 to see the pulse for the high intensity lighting circuit. Now using the change in capacitors and to resistor R35 we simulated the medium intensity lighting circuit and the low intensity lighting circuit. For the medium intensity we get a 1.2 ms pulse and for the low intensity we get a 680 μs pulse. To view these pulses see Figure 24 and Figure 25.

Current	Current Calculated	Current Value
I1	This current was calculated from the R equivalent of the High Intensity lighting circuit. The calculation is 15V/ 68.1KΩ. For values please see Figure 18.	220 μA
I2	This current was calculated from the 15V supply next to opto-coupler U4. The calculation is 15V/ R22 or 15V/1KΩ. For values please see Figure 18.	15 mA
I3	This current was found at pin eight of 555 timer U5. For values please see Figure 18.	150 μA
I4	From voltage regulator circuit using the 15 volts, VR6, and R13. The calculation is (15 - 3.3)/1.8K. For values please see Figure 7.	6.5 mA
I5	The maximum supply current for IGBT driver U6. This current was found using IGBT driver's datasheet.	5mA
	Total Current	**26.87 mA**

Table 1: Total current consumed by 15 volt supply

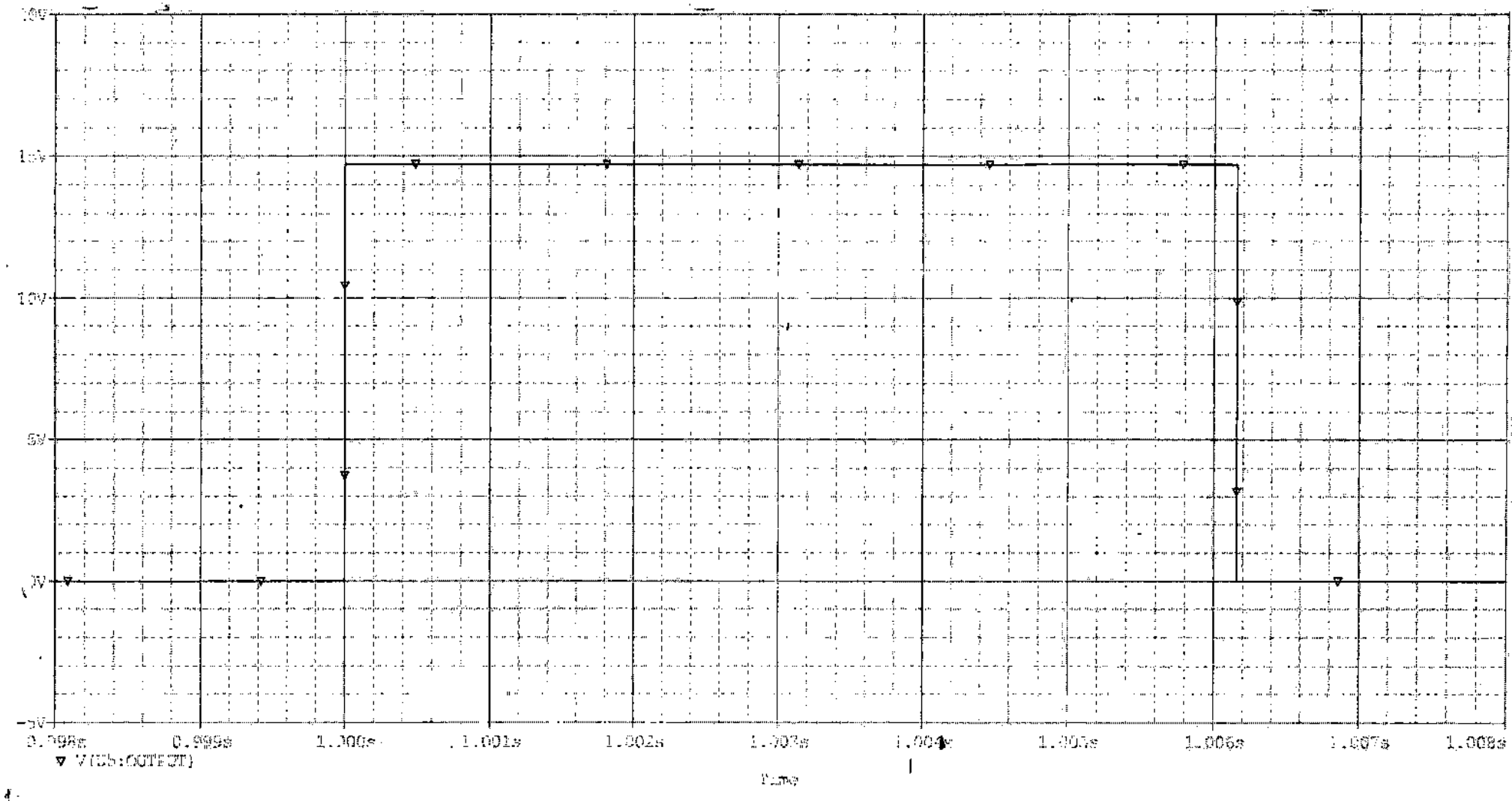

Figure 23: Recommended High Intensity Lighting Circuit

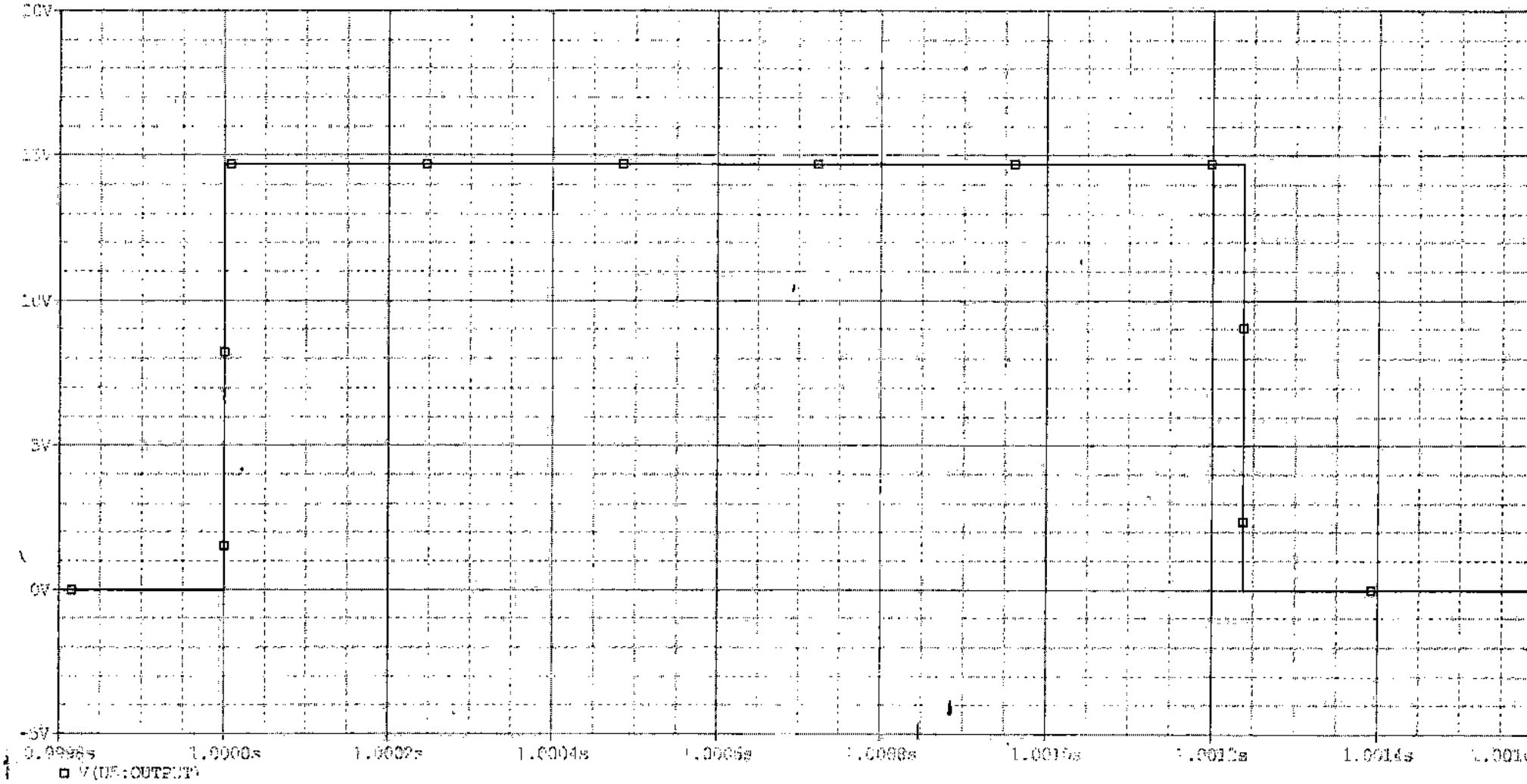

Figure 24: Recommended Medium Intensity Lighting Circuit

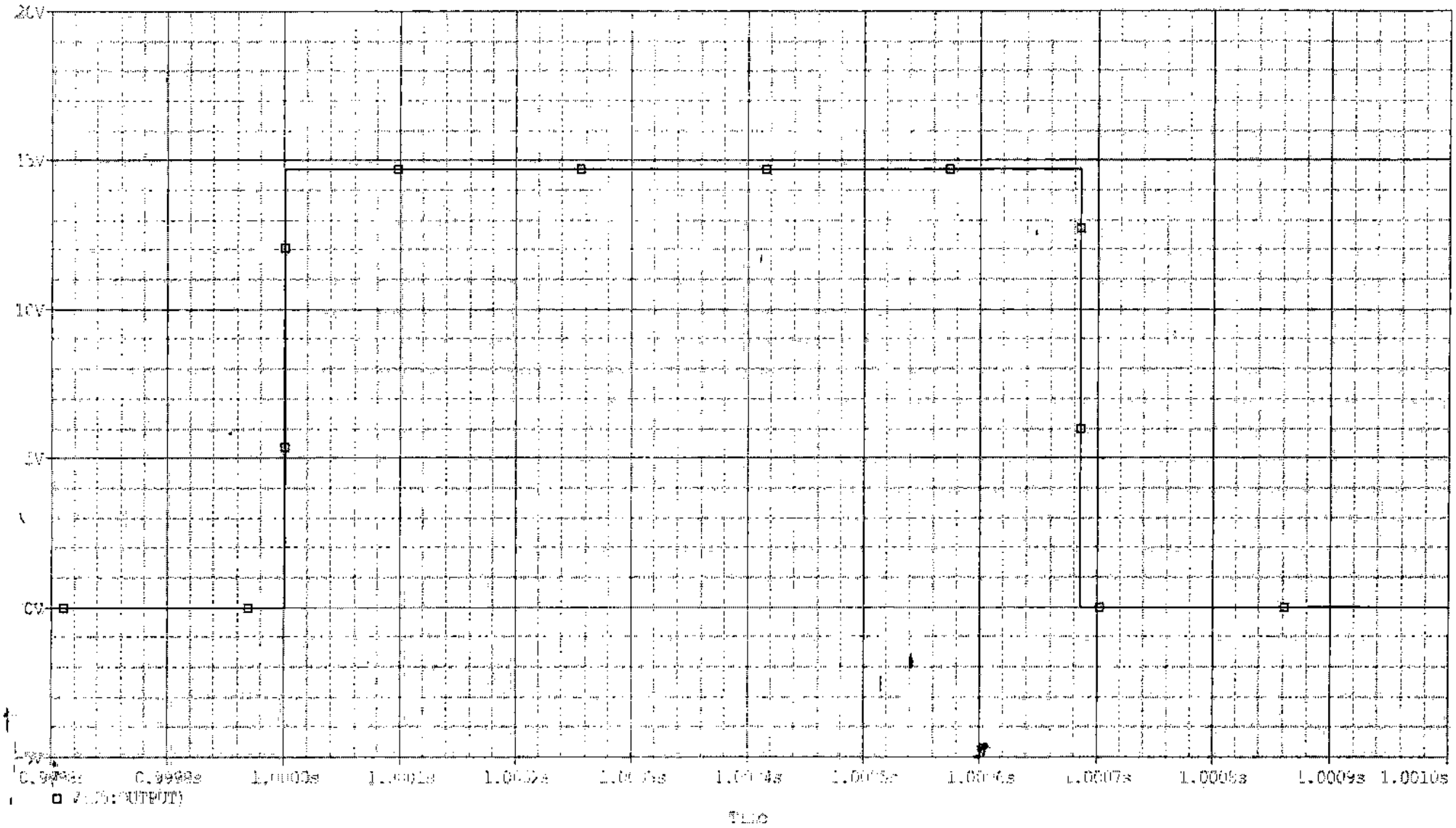

Figure 25: Recommended Low Intensity Lighting Circuit

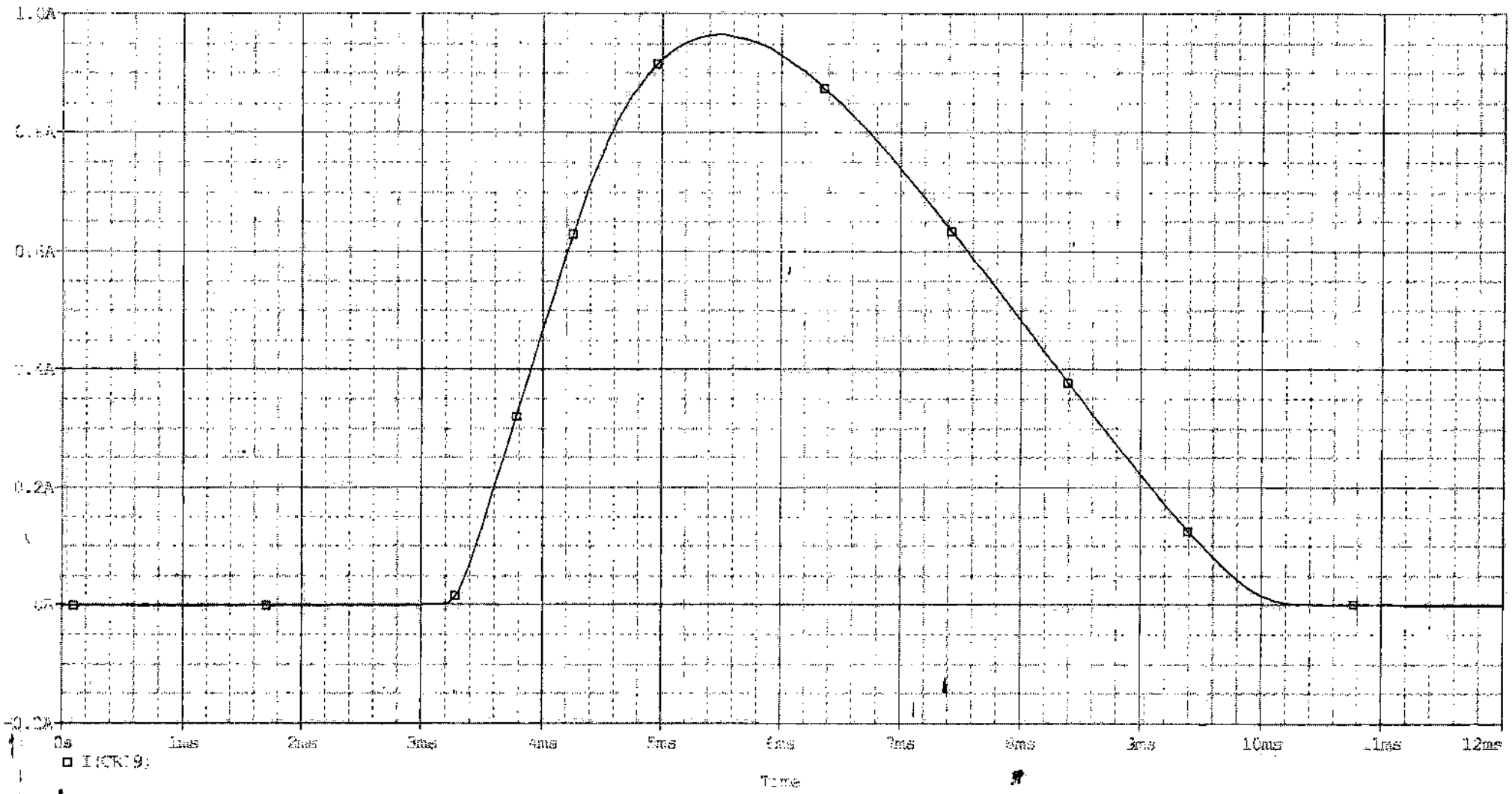

Figure 26: Current through resistor R37 for the low pulse of 750 µs in the current clamp circuit

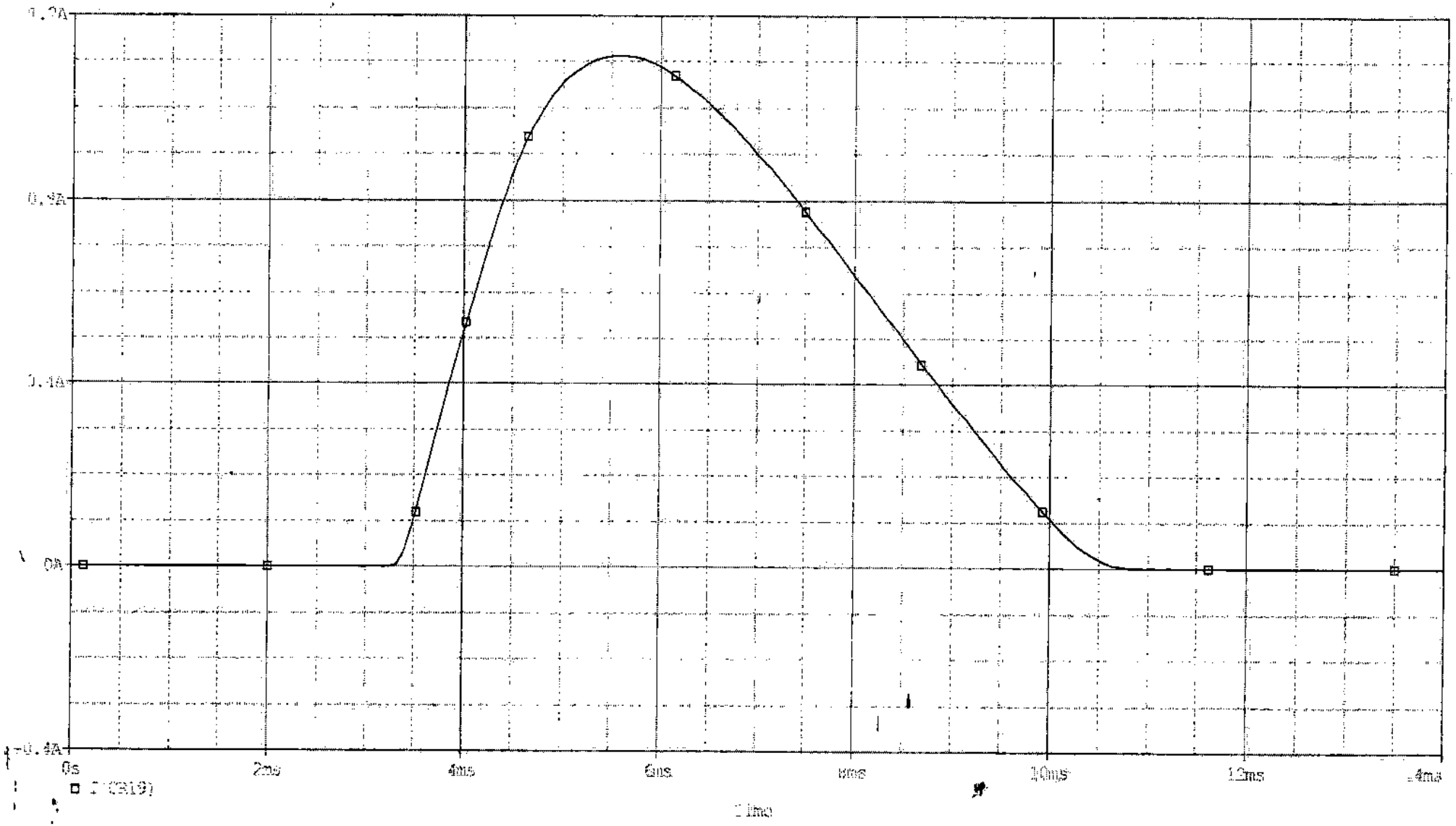

Figure 27: Current through resistor R37 for the medium pulse of 1.2 ms in the current clamp circuit

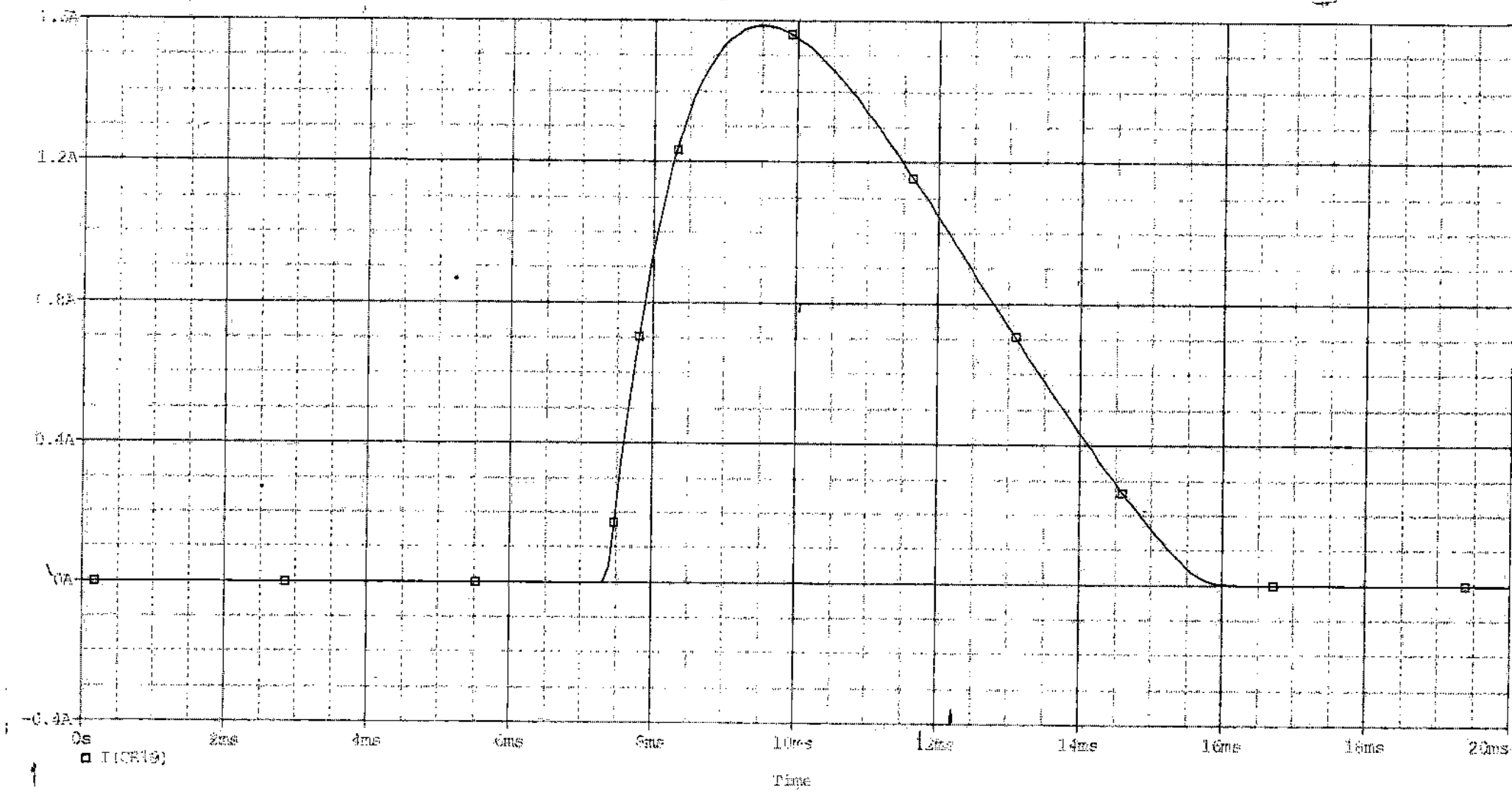

Figure 28: Current through resistor R37 for the high pulse of 6 ms in the current clamp circuit

HCET Hemispheric Center for Environmental Technology
environment • energy • information technology

Mechanical/Thermal Analysis
Sequence Flasher Unit

Prepared for

DME Corp.

Prepared by

Engineering and Technology Program
Hemispheric Center for Environmental Technology
Florida International University

April 23, 2002

Sequence Flasher Unit Mechanical/Thermal Analysis

HCET has completed its mechanical and thermal analysis of the Sequence Flasher Unit (SFU) for DME's low-cost aircraft approach lighting system. For the SFU design, DME provided HCET with preliminary drawings with nominal dimensions and a non-detailed IGES solid model. The cover and the back plate were specified to be aluminum in the drawings; no other component materials were specified. In discussions with DME personnel on April 2, 2002, it was decided that this report should consist of an analysis of the mounting system (since all other components are lightly loaded) and an analysis of the estimated interior temperature of the unit. Calculations were performed using Mathcad software with equations available in engineering reference books. A calculation package was completed for this analysis, with the results outlined in this report.

1.0 Unit Description

The sequence flasher unit designed by DME is composed of thin sheet aluminum. A back plate assembly is 0.125-inch aluminum and has adjustments to allow the tilt angle of the unit to change. There is a cover that attaches to the back plate using four latches (see Figure 1). A gasket between the back plate and the cover provides a weather-tight seal. The entire unit mounts on 6-inch diameter poles or 2-inch diameter poles. For the 6-inch pole, U-bolts and a mounting plate are used to connect the unit. For the 2-inch pole, a tube strap mounts the unit to the pole.

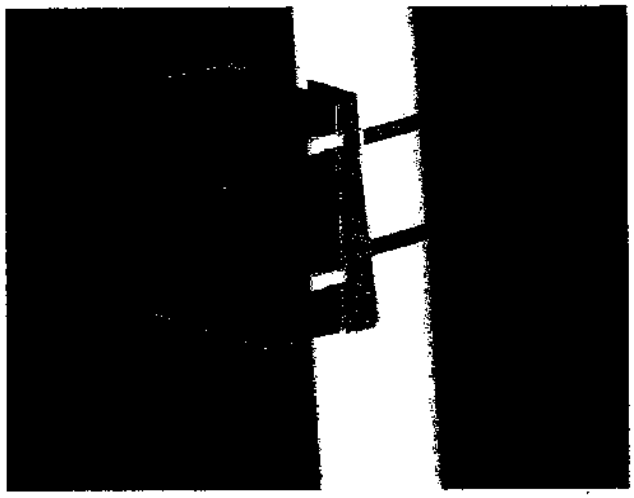

Figure 1. Overall view of the Sequence Flasher Unit.

2.0 Mechanical Analysis

Due to the size, material, and geometry of the sequence flasher unit box, and the relatively light weight of the components, the structure is able to handle the loads imposed by the components themselves. The part of the sequence flasher that could see the highest loads is the connection of the back plate to the 6-inch pole (see Figures 2 and 3). The loading for this connection is not the weight of the components but rather the

degree of tightness with which the nuts are tightened to the U-bolts. Since the bolts are tightened in the field, there is a potential for overloading this part of the structure. For this reason, this part of the structure was selected for analysis. The 2-inch pole connection is achieved by using a tube strap that, if appropriately sized, is not subject to the same loading condition.

DME's design for mounting the sequence flasher unit incorporates two U-bolts of ½-inch diameter, two mounting plates, two foam pads, and the back plate, as shown in Figures 2 and 3. The mounting assembly by itself can be seen in Figure 4. A sleeve on the U-bolts protects the finish of the pole from scratches and, if properly selected, increases the coefficient of friction between the U-bolt and the pole, thus reducing the tendency of the assembly to slide down.

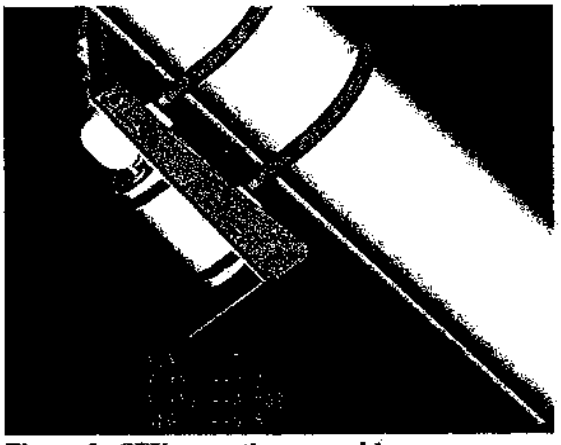

Figure 2. SFU mounting assembly.

Figure 3. SFU mounting unit (part of the back plate assembly removed).

The mounting plate, shown in Figure 5, has dimensions of 9-in by 1.5-in by 0.25-in. The holes are nominally 0.5-in diameter with a distance from the center of the hole to the edge of the mounting plate of 0.81-in. While the exact material specification for the mounting plate was not provided, typical mounting plates for U-bolts are made of 304 stainless steel.

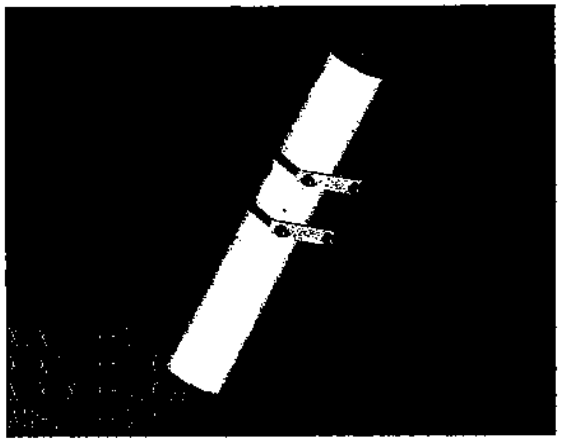

Figure 4. Mounting assembly components.

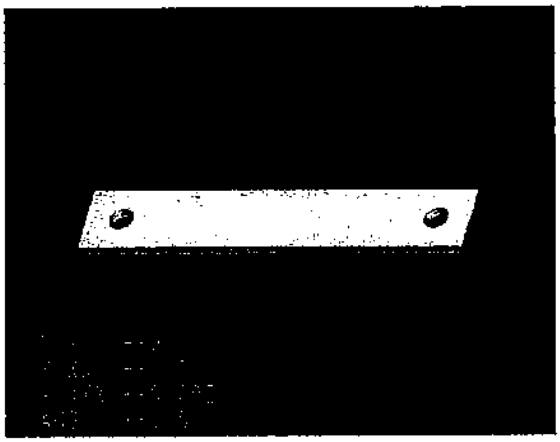

Figure 5. Mounting plate.

2.1 Engineering Model

Based on the geometry of the mounting plate, calculations were made using a line loading in the center of the mounting plate due to the pole and the loads due to the U-bolt. For the analysis, since the mounting plate is so much stronger than the back plate, the assistance of the back plate in resisting the load is ignored, and all of the load is modeled as acting on the mounting plate.

2.2 Mechanical Analysis Results

The calculations performed indicate that for a stress of 30 ksi, on a single mounting plate, the force holding the sequence flasher unit against the pole would be 250 lbf. The yield stress of 30 ksi was used, since the specification for the plate is unknown and virtually all stainless steels have a yield stress at or above 30 ksi. Since each mounting plate can provide a force of 250 lbf, for the two mounting plates, the total force available for holding the sequence flasher on the pole would be 500 lbf. If the sequence flasher unit weighs 10 lb, the coefficient of friction between the U-bolts and the pole would only need to be greater than 0.02. However, the expected coefficient of friction between the U-bolts with the sleeve and the pole is at least an order of magnitude greater. Thus, there should be no problem providing enough force via the U-bolts to hold the sequence flasher unit in place by friction. For the 250 lbf load per mounting plate, the deflection of the plate is calculated as 0.036-in.

If the approximation is made that the coefficient of friction for the threads and nuts is 0.15, the helix angle is ignored, and the friction collar radius of the nut is approximated 2/3 of the pitch diameter of the bolt, an estimated tightening torque on the nut to produce 250 lbf of 13 in-lbf is obtained.

The results listed above are linearly related, which means that if the yield stress is doubled to 60 ksi, the force on the pole would double to 500 lbf per mounting plate; the deflection would double to 0.072-in, and the torque on each nut would double to 26 in-lbf. A torque of 26 in-lbf per nut is still fairly low, and care should be taken by the installer not to exceed that value in order to avoid permanent deformation of the mounting plate. For this case, the minimum allowable coefficient of friction between the U-bolt sleeve and the pole would be half the value than for the 30 ksi yield stress case, with a new value of 0.018-in.

In addition to the mechanical analysis of the sequence flasher unit, HCET has performed an analysis to estimate the steady-state temperature inside the unit.

3.0 Thermal Analysis

The sequence flasher unit (SFU) is essentially a rectangular box that is subject to exterior temperature loading, wind effects, and interior thermal heating due to the electronics components housed by the unit. According to DME, 120 Watts are sent into the unit, where an estimated 90 Watts come out through the flasher window, while the remaining 30 Watts stay inside and are dissipated as heat. Based on an outside temperature of 70°C, the steady-state temperature inside the sequence flasher was calculated.

3.1 Thermal Model

For this analysis, the sequence flasher unit is treated as an airtight box. The interior temperature was taken as uniform, since convection currents will equalize the air temperature inside. The heat transfer mechanism is convection on the inside and outside of the box and conduction through the aluminum wall. The interior temperature is calculated for the steady-state condition, with no wind (worst case scenario), and an outside temperature of 70°C.

3.2 Thermal Model Results

For the conditions outlined in the previous section, the estimated interior temperature of the sequence flasher unit is 107°C. However, if there is a light wind outside the box (~ 5 mph), the interior temperature would lower to 92°C.

4.0 Conclusions

A mechanical and thermal analysis of DME's sequence flasher unit was completed. The mechanical analysis indicates that the most critical components are the mounting plates for the 6-inch pole. These plates may be permanently deformed if field personnel over-tighten the U-bolts holding the unit to the pole. The analysis indicates that while there is adequate strength to hold the sequence flasher against the pole by friction, tightening the nuts on the U-bolts beyond only 13 in-lbf can cause permanent deformation of the mounting plate (assuming the yield stress of the mounting plate is 30 ksi). This component should therefore be stiffened or adequate instructions given to field personnel to avoid over-tightening of the U-bolts. The thermal analysis indicates that for a 70°C exterior temperature with no wind, the estimated temperature inside the cabinet will be 107°C.

HCET Hemispheric Center for Environmental Technology
environment • energy • information technology

Mechanical Design/Analysis
Halogen Light Bar

Prepared for

DME Corp.

Prepared by

Engineering and Technology Program
Hemispheric Center for Environmental Technology
Florida International University

April 29, 2002

Halogen Bar Mechanical Design/Analysis

The Federal Aviation Administration has given DME and Florida International University's Hemispheric Center for Environmental Technology (HCET) a grant for the design of a low-cost approach lighting system (LCALS). This work includes design, analysis, and testing of a sequence flasher system and a halogen light bar system. HCET has already completed the analysis of the sequence flasher unit. This report includes the design and analysis of the halogen light bar (HLB) system.

1.0 Background

In February 2002, HCET obtained the design criteria for the halogen light bar (see Appendix E) and reviewed it during a teleconference with DME. Based on the design criteria, HCET proposed two design concepts. One was a closed frame system, and the other was an open frame system. The closed frame concept is illustrated in Figures 1 through 5.

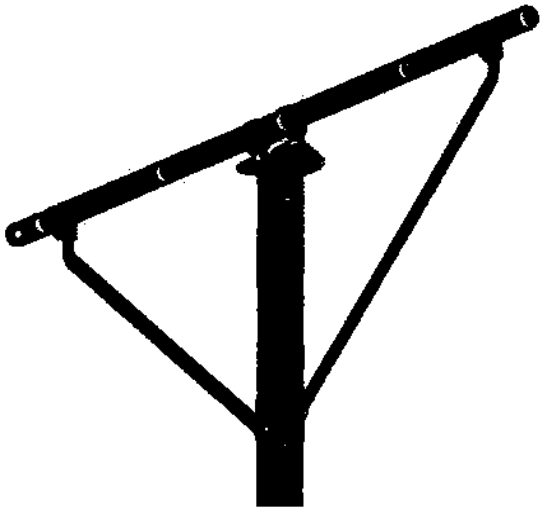

Figure 1. Closed frame light bar concept.

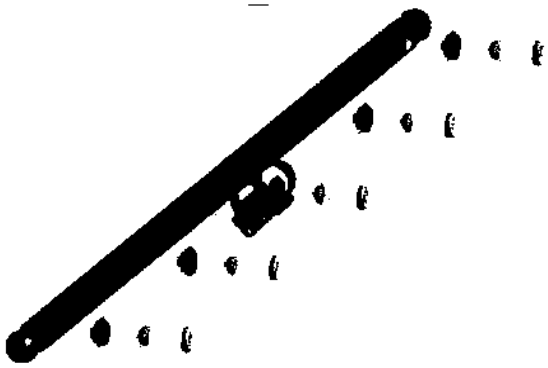

Figure 2. Closed frame exploded view.

Figure 3. Closed frame side view.

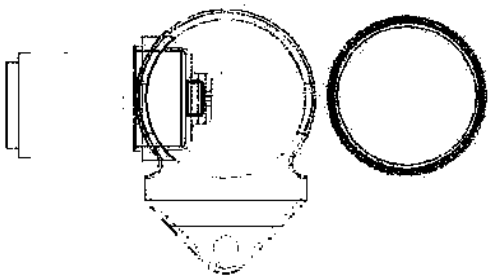

Figure 4. Closed frame side view.

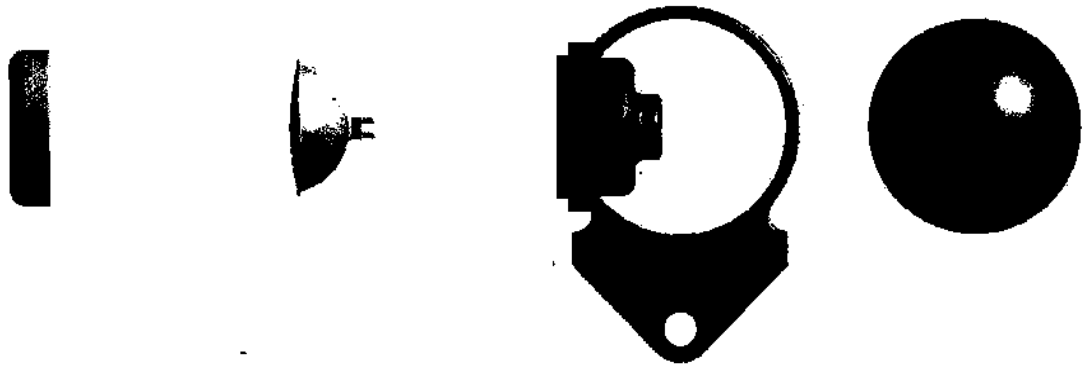

Figure 5. Closed frame side exploded view.

The second concept was based on an aluminum open frame and is illustrated in Figures 6-9.

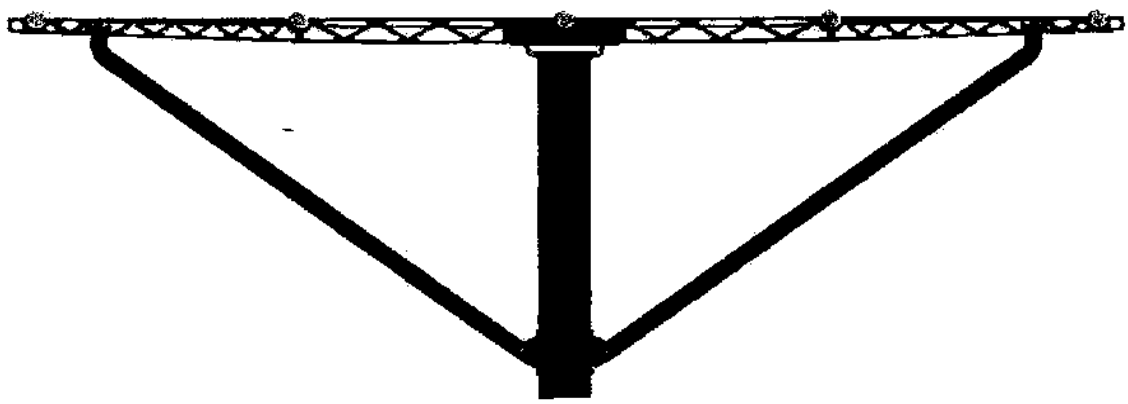

Figure 6. Open frame light bar concept.

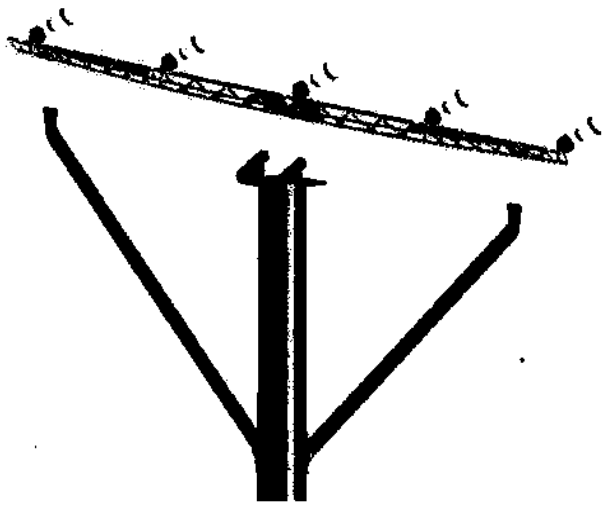

Figure 7. Open frame exploded view.

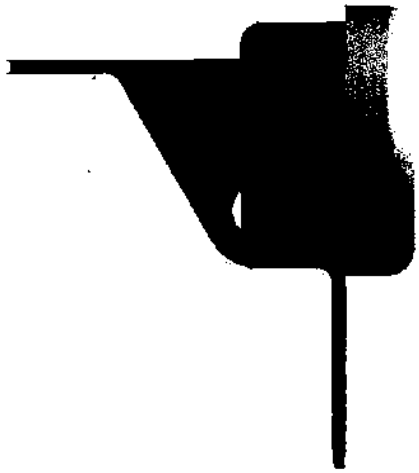

Figure 8. Open frame side view.

Figure 9. Open frame side exploded view.

Both of these systems required manufacturing several key components. While the connector to the halogen light was commercially available, all of the surrounding components to hold the connector and the halogen light bulb had to be manufactured. The open design was based on an aluminum construction that could be easily fabricated by stamping and bending.

On April 2, 2002, both the open and closed system concepts for the HLB were presented to DME. During the meeting, HCET was asked to use a non-metallic material for the bar itself. We were also asked to use off-the-shelf components as much as possible. After the meeting, a search was conducted to look for off-the-shelf items that could be used to produce the halogen light bar system. This search led to an examination of exterior lighting systems. One system in particular appeared to be appropriate for the halogen light bar. This new lamp had a push-on cap, a connector, and wiring for the halogen bulb. The lamp itself is shown in Figure 10. Figures 11-12 show the lamp in an open light bar frame.

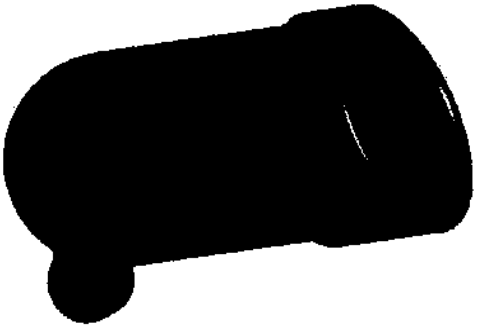

Figure 10. Exterior halogen lamp.

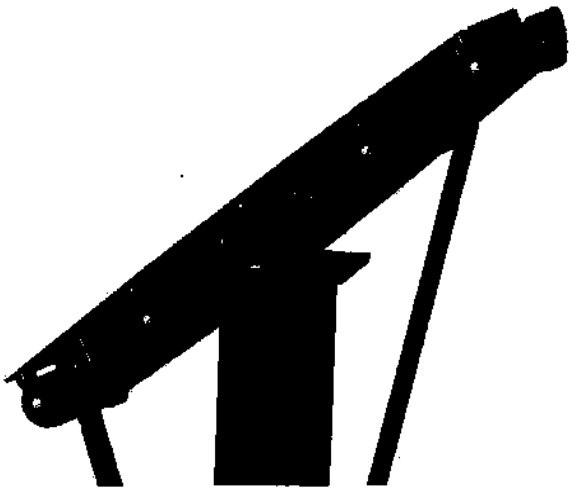

Figure 11. Open frame with exterior lamp.

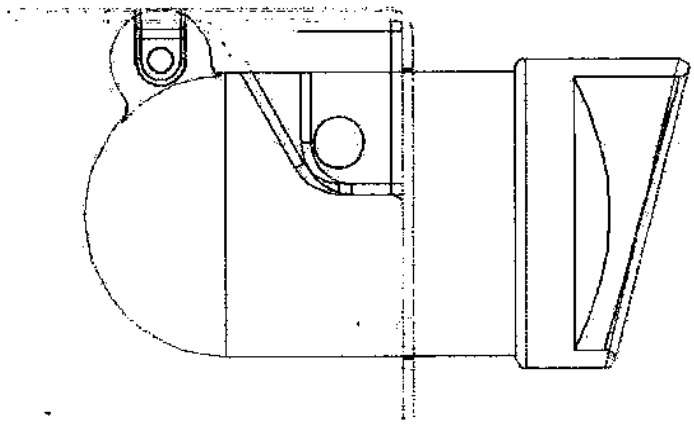

Figure 12. Open frame with exterior light concept.

Several of these lamps were purchased for further examination. Examination revealed that the body was aluminum, while the front cap was rubber. The halogen bulb was held with a metal piece that was pushed into the body by the rubber cap. There was some question as to the repeatability of the alignment of the bulbs when replaced by field personnel. A sample of this lighting system was left at DME for cold temperature testing. Meanwhile, HCET continued searching for alternative light systems that could be used for this project. The search yielded a lamp that was more appropriate and required less modifications. This new lamp was subsequently selected for the final design.

The current design employs an exterior lighting lamp, model 30005, manufactured by Tazz lighting. The construction is all aluminum, and the halogen light is held in place by a large-diameter spring (see Figure 13). By manufacturing a simple spacer in the front, this system will allow for simple and repeatable positioning of the halogen bulb. The lighting includes a tempered glass lens and is suitable for MR16 halogen bulbs up to 12V 50 W. The idea was to use the open L-shaped frame, shown in Figure 6, and replace the lamp in Figures 11 and 12 with the new one, as shown in Figure 14.

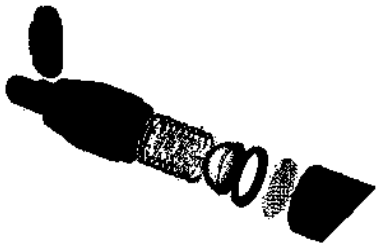

Figure 13. Tazz light- exploded view.

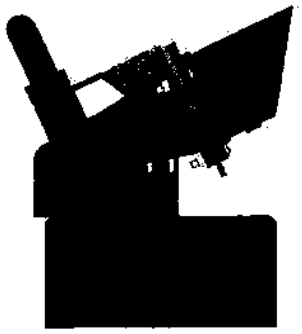

Figure 14. Tazz light in L-frame.

After this design was completed, a mechanical stress/deflection analysis was performed. This analysis showed that the open L-shape was prone to twisting, which could cause significant misalignment of the lights at the ends of the pole when the bar was subjected to a 120 mph wind. Therefore, it was decided to modify the frame to a closed frame that would resist the misalignment.

2.0 Final Concept Description

The final concept for the halogen light bar system designed by HCET is composed of a 1/8-in, 3-in square fiberglass tube with holes spaced 2.5 ft. apart. The holes are used to hold the Tazz 30005 halogen light assemblies. The fiberglass tubing is cut into a truss assembly to minimize wind resistance and weight, as shown in Figures 15 and 16.

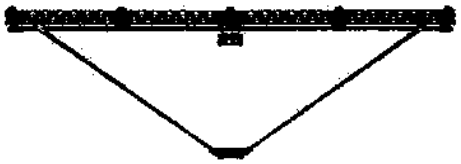

Figure 15. Halogen light bar design.

Figure 16. Halogen light bar design (side).

The lamp was modified with a latch to allow easy removal and installation of the cap for bulb replacement. The back of the lamp contains weather-tight electrical fittings to hold all of the electrical wires.

The HLB has two outriggers made of fiberglass tubing. Miscellaneous hardware is used to keep all of the components together. While the main components can be obtained off-the-shelf, some of the ancillary parts are custom parts and will need to be fabricated.

Unfortunately, given the conflicting constraints of making the system rugged enough to handle 120 mph winds and minimizing the weight (while using off-the shelf, non-metallic materials), HCET was not able to keep the weight at 22 lbs. The overall weight of the halogen light bar, outriggers, mounting cap, and all miscellaneous hardware was estimated to be 29 lbs for the 6-in pole assembly and 25 lbs for the 2-in pole assembly. These weights do not include the transformer that would have to be mounted at the base of the pole. It was not possible to lighten the system so as to include the transformer, given the constraints placed on us for materials (non-metallic).

3.0 Mechanical Analysis

In order to analyze the HCET halogen light bar design, a solid model of the unit was created using Pro Engineer and analyzed using Pro Mechanica. Since the unit is relatively light, the loads caused by the weight of the system itself are low. The highest loads expected for this unit come from the windblasts caused by aircraft. The highest wind speed for the design was specified by DME to be 120 mph. Using this wind speed value, drag parameters were estimated and used as inputs to the finite element model. A description of the model and the assumptions involved are listed in the next section.

3.1 Engineering Model

The halogen light bar was modeled and analyzed using finite element analysis. In order to perform this analysis, it was necessary to estimate the drag force caused by a wind speed of 120 mph, at the maximum density possible for the specified environmental operating range. The drag load was calculated for both the front surface and the rear surface of the HLB. For the front surface, the total load was calculated at 148 lbs (with a 1.3 load safety factor). For the rear surface, 50% of the drag was used (with a 1.3 load safety factor) in order to account for a percent of the air that bypasses the front surface yet might still impinge on the rear surface. The rear surface drag was calculated to be 64 lbs. Therefore, the model uses a uniform surface drag load of 148 lbs on the front of the HLB and a uniform surface drag load of 64 lbs on the rear of the HLB, both in the same direction. The HLB was constrained at the bottom boltholes where the bar mates with the mounting fork. The specifications used for the fiberglass were flexural modulus (lengthwise) of 1600 ksi and poisson ratio of 0.33. The model ignores the contribution of the outriggers to stabilizing the HLB as well as any stiffness contribution from the electrical conduit system. This is a conservative assumption. The loading utilized is shown in Figure 17.

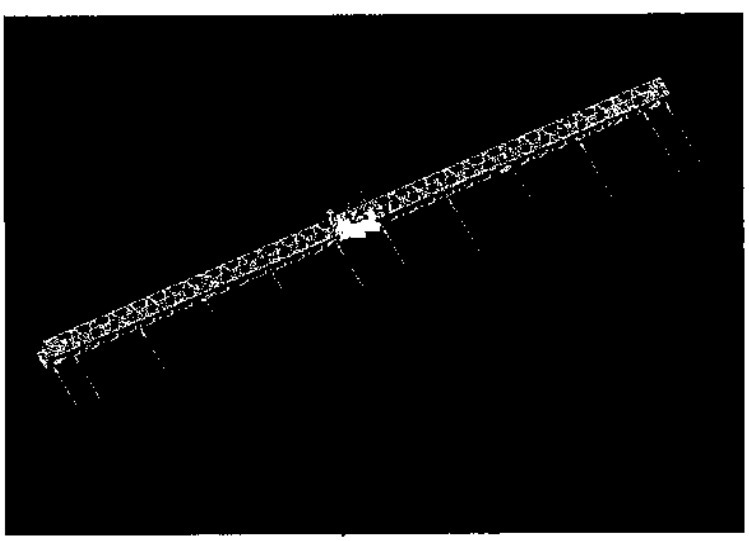

Figure 17. Loading utilized in Pro Mechanica.

3.2 Mechanical Analysis Results

After several iterations of the design process, the final design was produced. With the loads and material specifications listed above, the tip displacement was calculated to be 2.8 inches with a 120 mph wind. Figures 18 and 19 show an actual and an exaggerated view of the deflection (deflection values shown in the figures should be multiplied by 386 to obtain actual deflection in inches).

Figure 18. HLB FEA displacement results (max displacement is 2.8 inches).

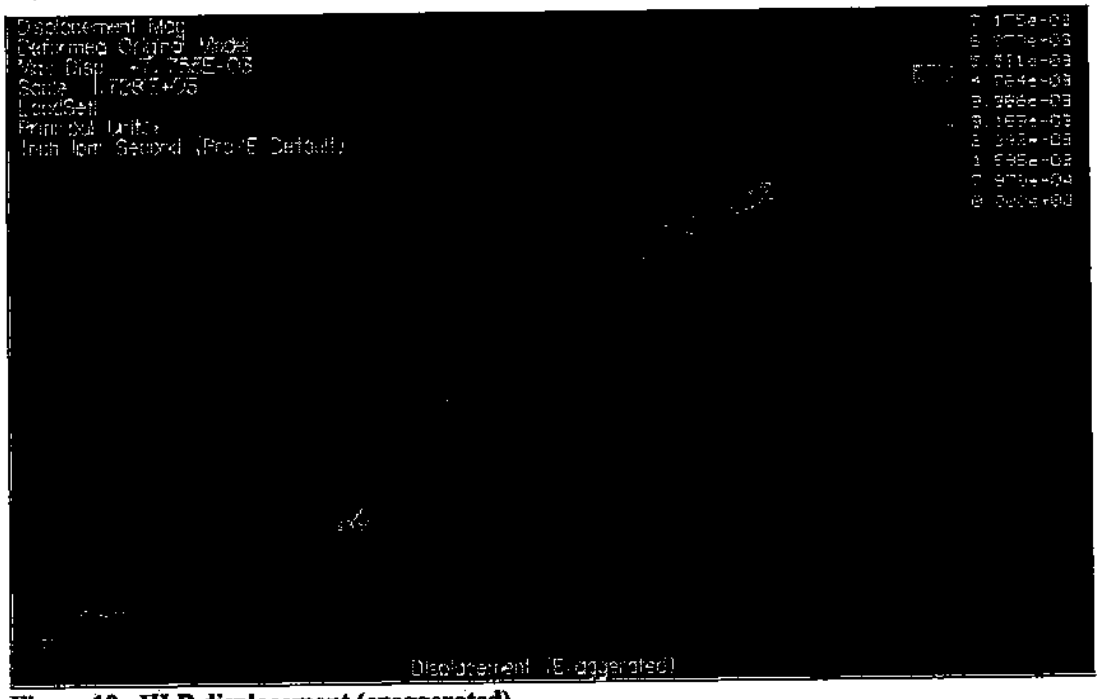

Figure 19. HLB displacement (exaggerated).

For the material and loading specified above, the largest stresses are in the vicinity of 9 ksi. The bar is mostly at a very low stress state except near the center, as shown in Figures 20 and 21.

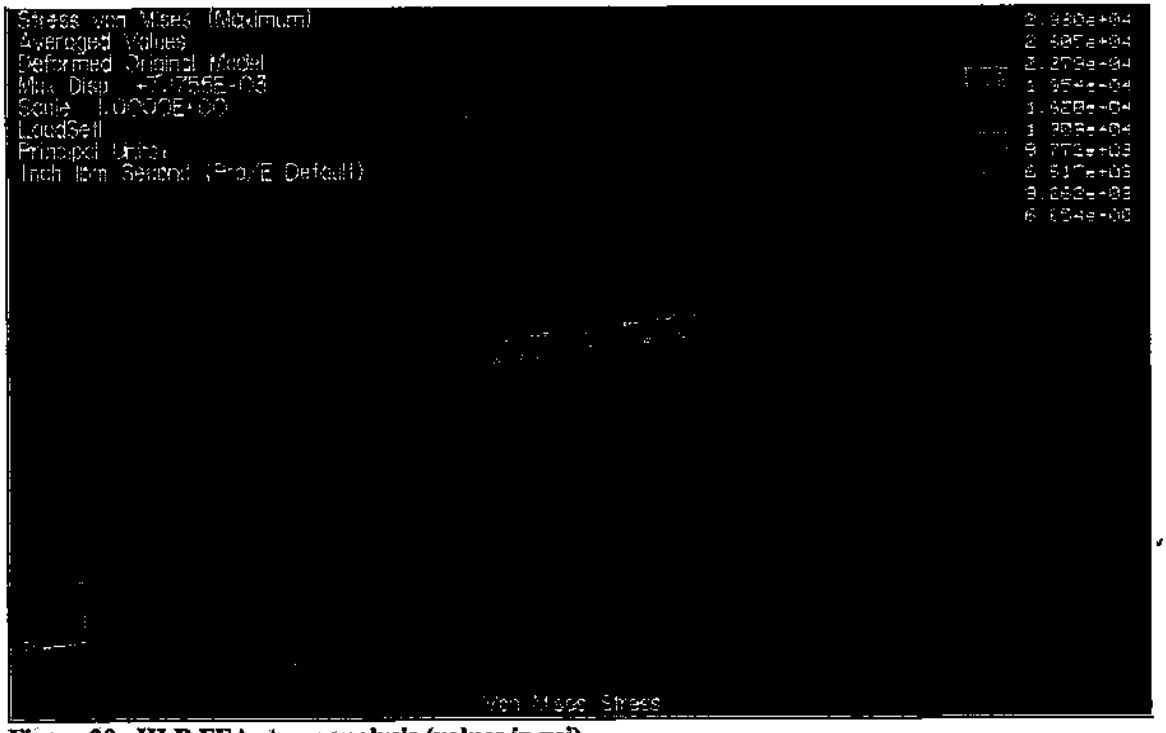

Figure 20. HLB FEA stress analysis (values in psi).

Figure 21. HLB stress near center of bar (note areas of high stress near the first few triangles on either side of the center of the light bar).

Localized areas of high stresses were found near the mounting holes at the constraints; however, the constraints were not selected to be representative of the loads in the vicinity of the holes but rather to allow for an analysis of the stress state far from the constraints.

Material was added near the lamp holes to stiffen the structure at those locations and minimize stress. Due to the closed cross-section of the HLB, the twisting of the structure due to the wind load is negligible, thus guaranteeing that the wind loading will not misalign the lamps in the vertical direction (see Figure 22).

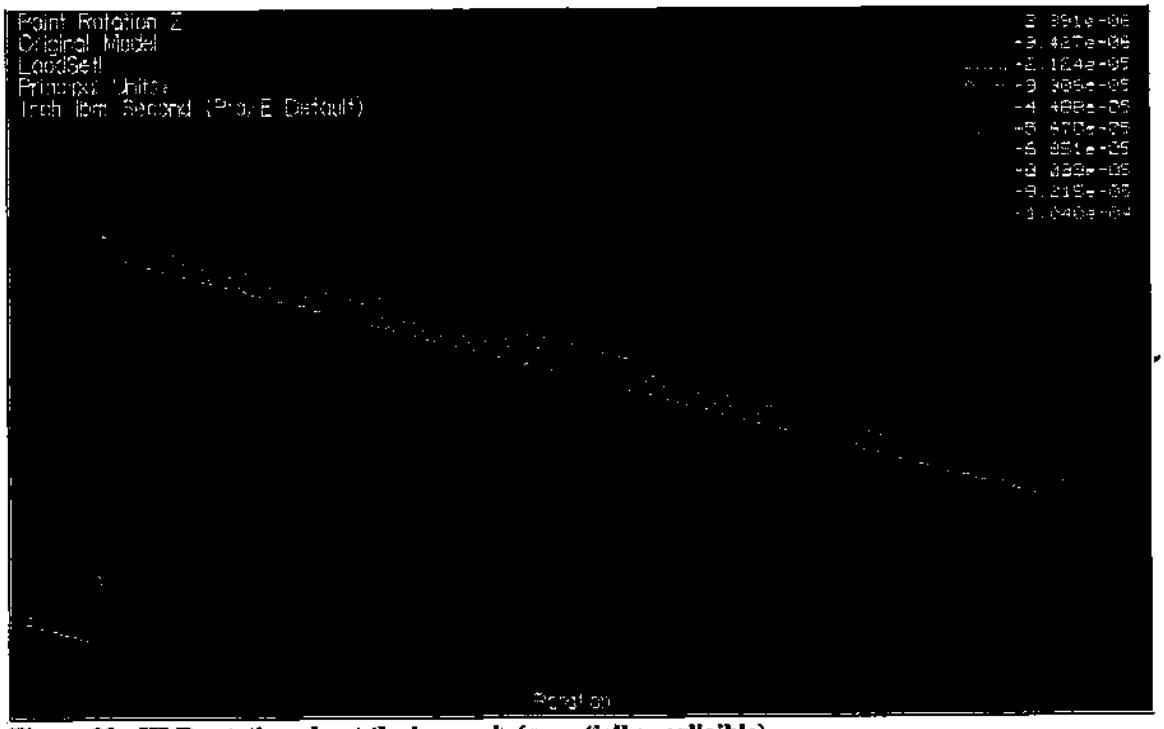

Figure 22. HLB rotation about the long axis (essentially negligible).

Plans for the HLB components were printed and are included in Appendix B. Appendix C has cut-sheets of the purchased components, while Appendix D has a parts tree list for easy reference of parts and drawings. In addition to the mechanical analysis of the HLB, HCET has performed experiments to understand the heat output of the halogen light and its assembly.

3.3 Vibration Analysis

The halogen light bar was also analyzed for vibration. The vibrational model consists of the fiberglass bar and weights at the lamp locations to model the weight of each lamp. The bar was constrained at the mounting holes, and the outriggers were disconnected to obtain the low-end natural frequency data. The analysis shows that the four lowest natural frequencies are 4.7, 7.9, 8.6, and 8.8 Hz. Figures 23 though 26 show the mode shapes for these frequencies (exaggerated by a factor of 20). The first mode is for vibration at 4.7 Hz. As shown in Figure 23, this mode consists of alternating movements of the arms in the vertical direction. Since the vertical movement of the bar is

constrained by the outriggers, this calculated mode can be ignored since the outriggers will stiffen the structure sufficiently so as to move this natural frequency much above 4.7 Hz. The next frequency is 7.9 Hz and corresponds to a similar motion as for the first natural frequency but in the horizontal direction (Figure 24).

Figure 23. Mode shape at 4.7 Hz natural frequency (displacement exaggerated).

Figure 24. Mode shape at 7.9 Hz natural frequency (displacement exaggerated).

The third frequency at 8.6 Hz and the fourth frequency at 8.8 Hz are essentially a flapping motion (Figures 25 and 26) in the horizontal and vertical directions, respectively, where the arms of the HLB "flap" together while the center remains fixed on the support.

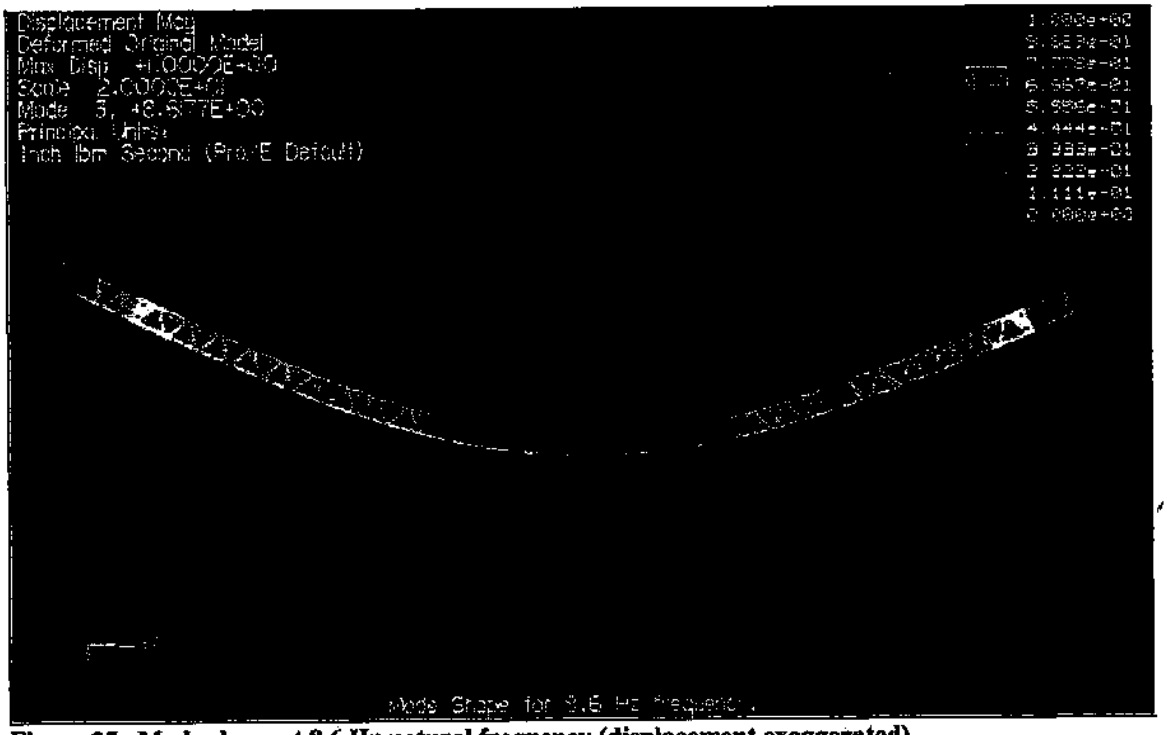

Figure 25. Mode shape at 8.6 Hz natural frequency (displacement exaggerated).

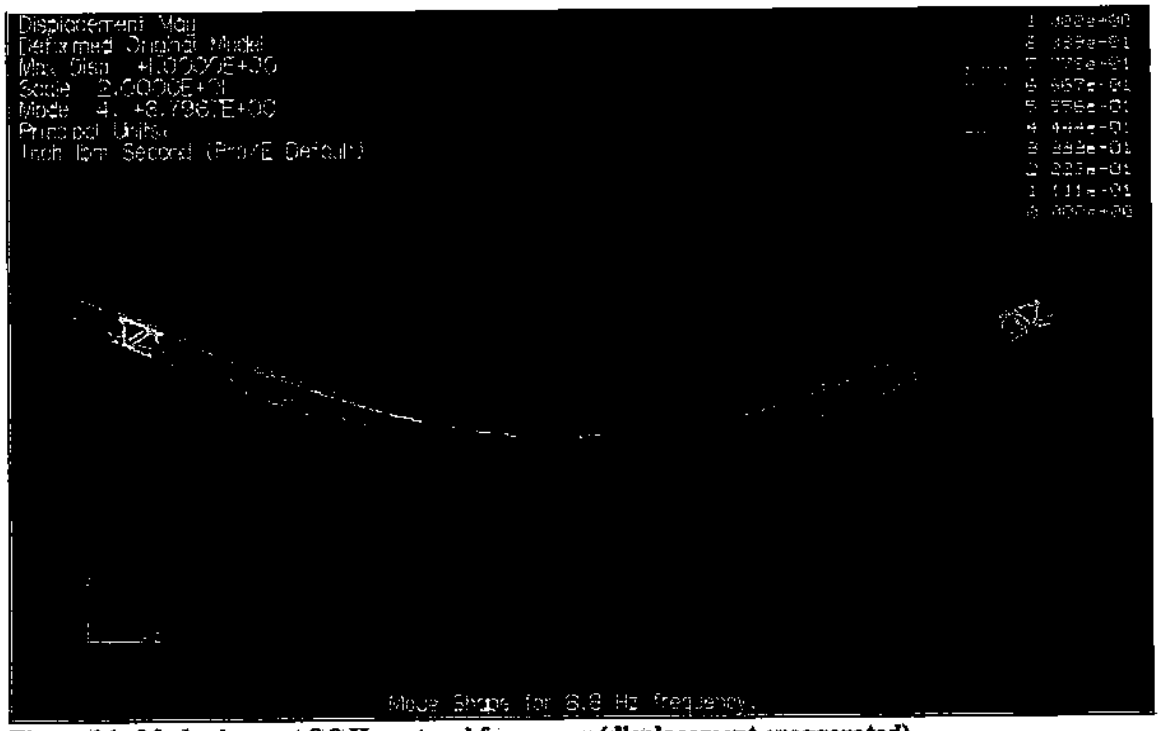

Figure 26. Mode shape at 8.8 Hz natural frequency (displacement exaggerated).

Once again, the mode at 8.6 Hz natural frequency can be ignored since the outriggers will stiffen the structure against vertical motions and will thus increase that natural frequency.

4.0 Thermal Experiments

Halogen light bulbs operate at high temperatures (when compared to incandescent or fluorescent lights). In order to determine the heat generated by these lamps, tests were performed at HCET to estimate the temperature of the bulb and the lamps at various locations. These tests are listed below.

4.1 Halogen Light Bulb Temperature

The thermal testing of the halogen bulb consisted of powering up a lamp, measuring the input voltage and current, and taking temperature measurements at various locations. This testing at an ambient temperature of 22°C revealed that the walls of the bulb ranged in temperature from 50°C to 203°C. In particular, temperature measurements of the back of the flange on the lamp were taken at various clock angles. These measurements were important since they would be a likely contact surface in mounting the lamps. The results show that the temperature does vary with clock angle relative to the location of the tungsten filament. The results from these tests are shown in Appendix A.

4.2 Tazz Lamp Body Temperature Test

A test similar to the one in the previous section was conducted, except that the temperatures were taken at various locations in the body of the lamps. The lamp was turned on for at least 30 minutes, and temperatures were taken. The testing at an ambient temperature of 22°C revealed that the body of the Tazz lamp was at a consistent temperature of 60°C. Appendix A includes the results of this testing along with tests on other lamp models.

5.0 Conclusions

A mechanical design and analysis of the HLB unit was completed. Design drawings were prepared and are included in Appendix B. The mechanical analysis indicates that a 120 mph wind will cause a deflection of 2.8-in with negligible angular misalignment of the structure. The typical stresses the bar will see are low; however, 120 mph winds can create stresses up to 9 ksi. While this is still well below the ultimate stress values listed for pultruded fiberglass tubes (30 ksi typical, with one manufacturer – Shakespeare- indicating 85 ksi flexural strength), fiberglass weakens when it is heated. Therefore, the environmental tests that will be performed on the prototypes will need to verify the system's ability to hold a load, while the lights are on, in the maximum outside temperature conditions allowed.

Appendix A
Lamp Testing

3/01/02

DME-Lamp Experiments

EXPERIMENT I- Halogen Bulb Testing

Equipment

Thermocouple Meter:
Input signal: k
Volts: 115 VAC
Watts: 2w
Serial No. 5322544

Display: -105 +1372 °C
Model: DP116-KC1

Thermocouple:
Ω Omega Hypodermic Probe
HYP 3-16-1- ½ -K-U-48-RP

Lamp: # 1

Initial Data for Lamp # 1

Room Temperature: 22 °C
Input Current: 3.81 Amps
Voltage: 12.1 volts

Results of Lamp # 1

Front surface: max 126 °C = 260 °F
Back surface: 123 °C
Back on light source: 203 °C = 400 °F

Final Temperature of Room: 22 °C

3/05/02

EXPERIMENT II- Halogen Bulb Testing

Equipment

Thermocouple Meter:
Input signal: k
Volts: 115 VAC
Watts: 2w
Serial No. 5322544

Display: -105 +1372 °C
Model: DP116-KC1

Thermocouple:
Ω Omega Hypodermic Probe
HYP 3-16-1- ½ -K-U-48-RP

Lamps: 2 & 3

Initial Data for Lamp # 2

Room Temperature: 21°C
Input Current: 3.81 Amps
Voltage: 12.1 volts

Results on Lamp # 2

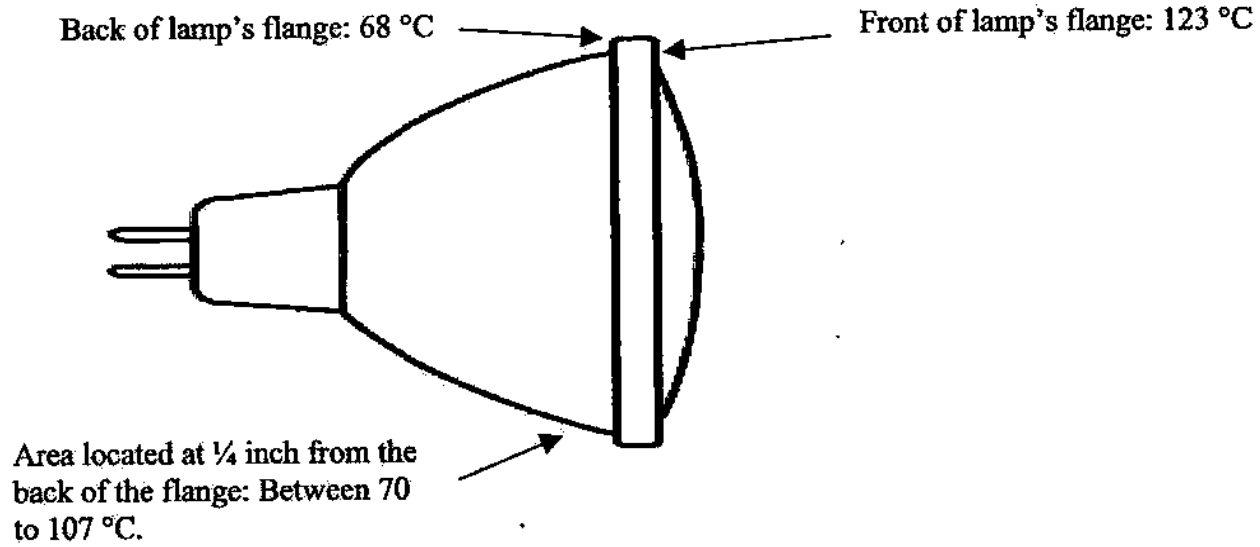

Figure 1. Temperatures in different areas of the lamp's surface.

Figure 2 shows the temperatures of areas located at ¼ inch from the back of the flange on Lamp # 2. All these temperatures are in °C.

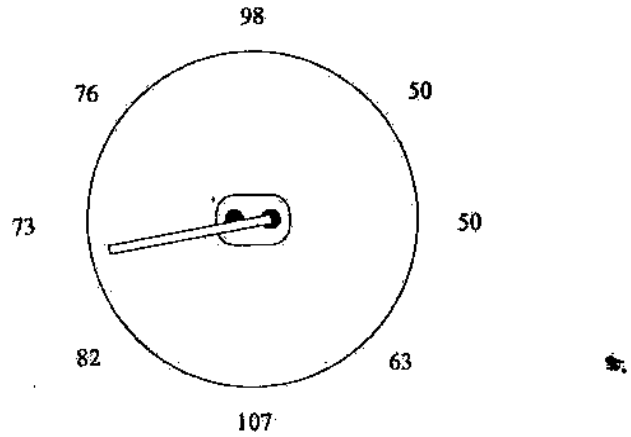

Figure 2. Temperatures in Celsius degrees Lamp # 2.

Initial Data for Lamp # 3

Room Temperature: 21°C
Input Current: 3.78 Amps
Voltage: 12.1 volts

Results of Lamp # 3

Figure 3 shows the temperatures of areas located at ¼ inch from the back of the flange on Lamp # 3. All these temperatures are in °C.

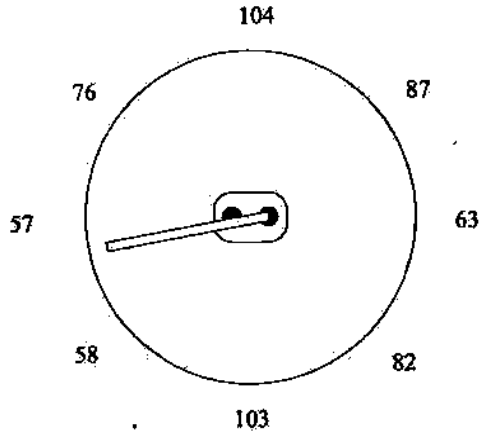

Figure 3. Temperatures in Celsius degrees Lamp # 3.

Final Temperature of Room: 21 °C

04/23/02

HALOGEN LAMP BODY TEMPERATURE

Experiments:

Lamp:

Tazz Lighting 30005, color black, Material: die-cast aluminum body, tempered glass lens, Weight: 14.6 oz/0.9125 lb

Instrument:

Ω Omega Model CL23A Calibrator-Thermometer, K-J-T Thermocouples Thermocouple Type T, Miniature TC jack

Initial:

Room Temp: 22.0°C
Lamp Temp: 24.6-26.3°C

Current: 3.78 Amps
Voltage: 12.0 volts

After 30 minutes:

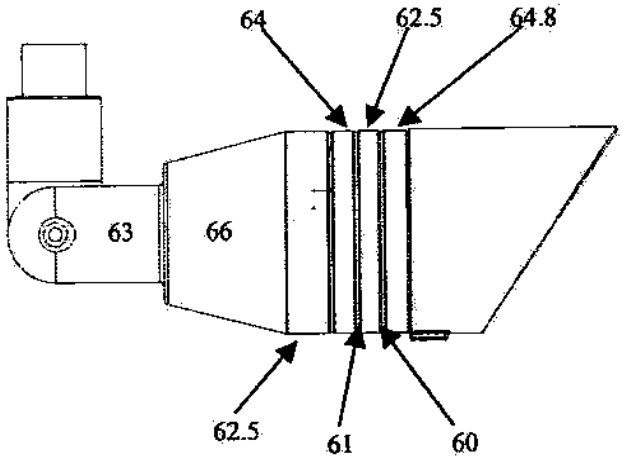

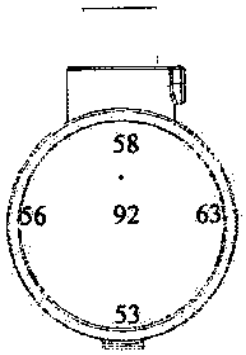

NOTE: All numbers are in °C

Room Temp: 21.6°C

Current: 3.75 Amps
Voltage: 12.1 volts

Lamp:

Sea Gull Lighting 9323-12, color black, Material: aluminum and rubber, glass, Weight: 12.8 oz/0.8 lb

Instrument:

Ω Omega Model CL23A Calibrator-Thermometer, K-J-T Thermocouples Thermocouple Type T, Miniature TC jack

Initial:

Room Temp: 22.0°C
Lamp Temp: 24.6-26.3°C

Current: 3.78 Amps
Voltage: 12.0 volts

After 45 minutes:

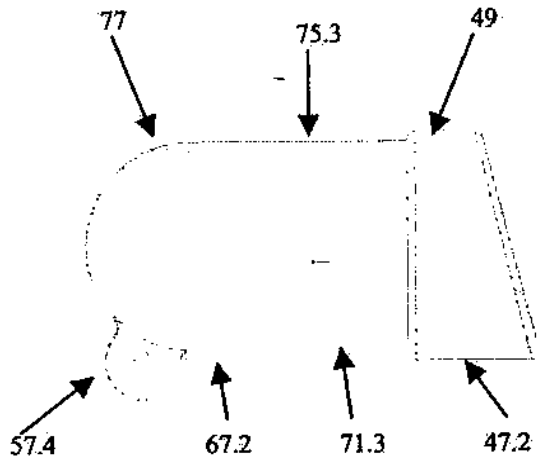

NOTE: All numbers are in °C

Room Temp: 21.7°C

Current: 3.78 Amps
Voltage: 12.3 volts

Lamp:

Tazz Lighting 30002, color green, Material: die-cast aluminum body, tempered glass, Weight: 13.1 oz/0.8188 lb

Instrument:

Ω Omega Model CL23A Calibrator-Thermometer, K-J-T Thermocouples Thermocouple Type T, Miniature TC jack

Initial:

Room Temp: 21.6°C
Lamp Temp: 21.8-22.6°C

Current: 3.80 Amps
Voltage: 12.0 volts

After 30 minutes:

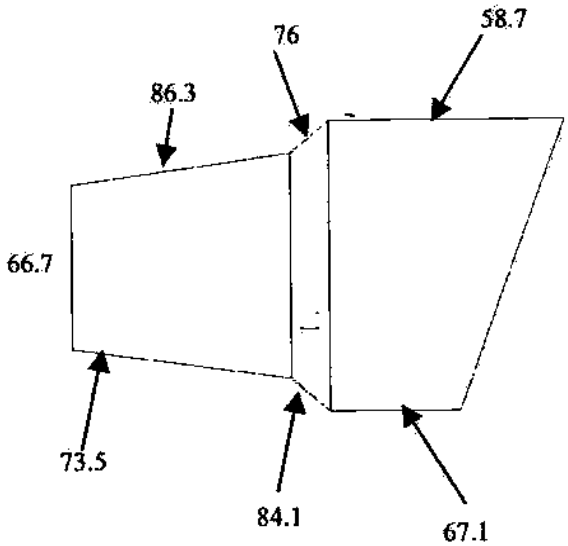

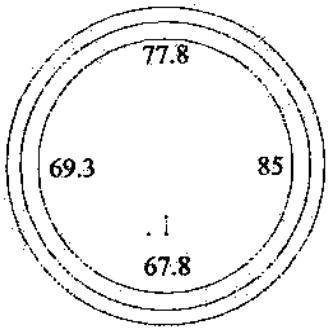

NOTE: All numbers are in °C

Room Temp: 21.3°C

Current: 3.80 Amps
Voltage: 12.2 volts

Appendix B
Final Design Drawings

REVISIONS			
LTR	DESCRIPTION	DATE	APPROVED

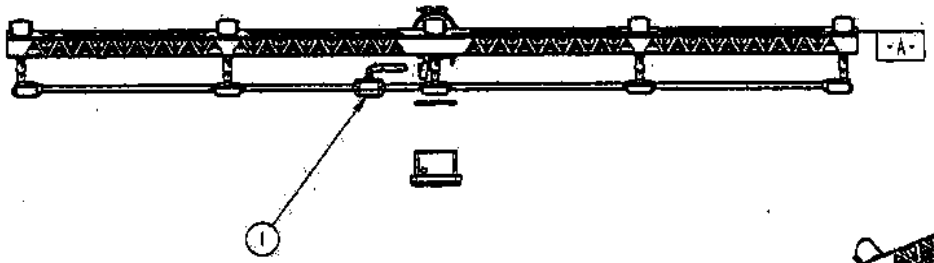

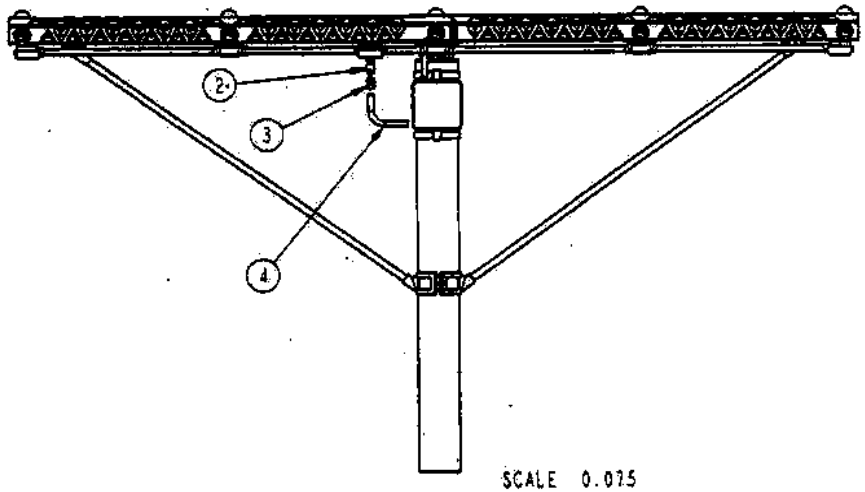

SCALE 0.075

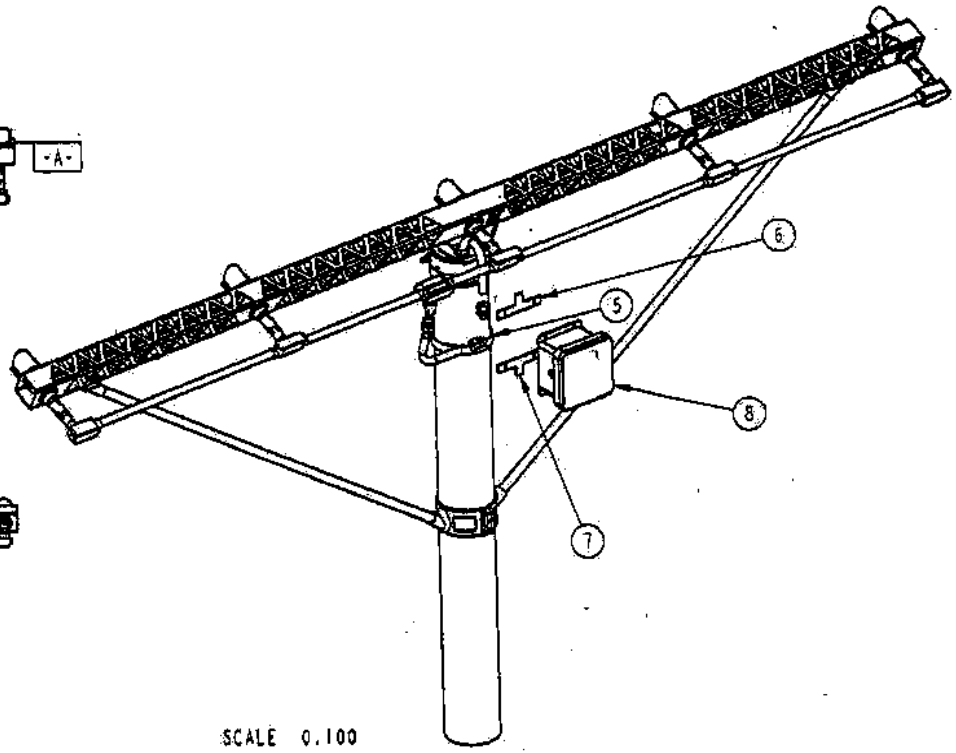

SCALE 0.100

ITEM	PART NUMBER	DESCRIPTION	QTY
8	D076E4XX4013		1
7	D076M3XX3019		1
6	D076M3XX3018		1
5	D076M4XX4003		2
4	D076E4XX4011		2
3	D076E4XX4012		4
2	D076E4XX4010		1
1	D076E4XX4006		1

NEXT ASSY	USED ON
APPLICATION	

UNLESS OTHERWISE NOTED LINEAR DIMS. IN INCHES. TOLERANCES DECIMAL .XX+/- .XXX+/- FINISH ANGULAR +/-
DO NOT SCALE DRAWING
TREATMENT
FINISH
WEIGHT

CONTRACT NO.	
DRAWN	LMONTANEZ
CHECK	JLAFFITTE
SES	LMONTANEZ
ENGR.	LMONTANEZ
Q.A.	LLABOS
MFG.	
DESIGN ACTIVITY	LMONTANEZ
CUSTOMER	DNE

Hawaii Natural Energy Institute

TITLE: TRANSFORMER BOX MOUNTING DETAILS

DWG SIZE	CAGE CODE	DWG NO.	REV.
C		TRANSFORMER	01

SCALE 0.020 | REL. DATE 6/08/02 | SHEET 2 OF 2

DWG NO. TRANSFORMER

REVISIONS			
LTR	DESCRIPTION	DATE	APPROVED

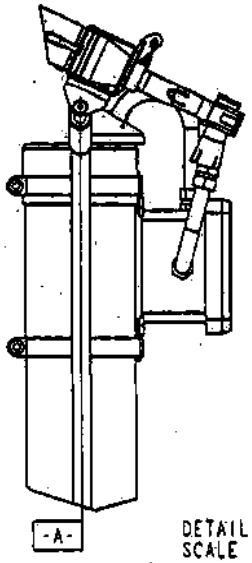

DETAIL D
SCALE 0.200

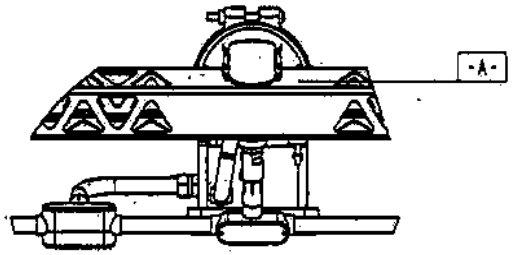

DETAIL C
SCALE 0.200

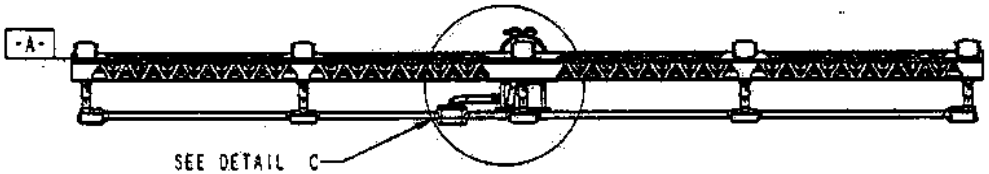

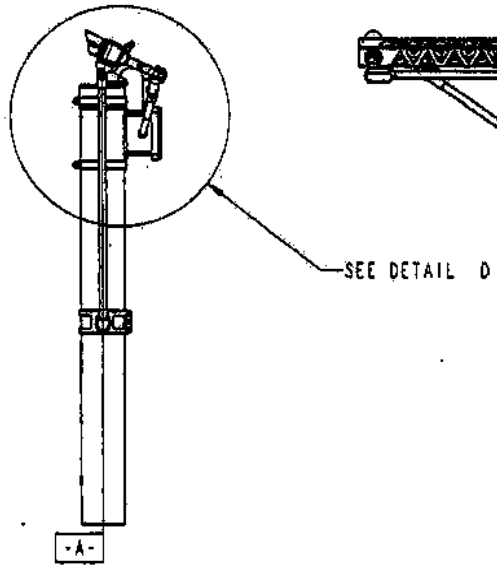

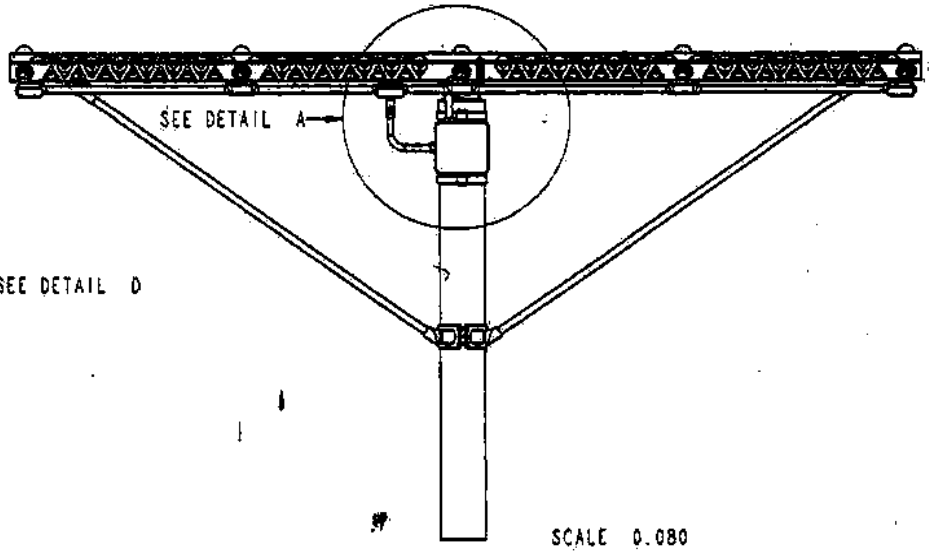

SCALE 0.080

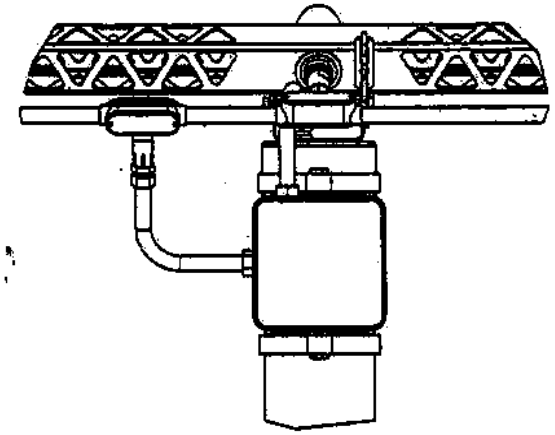

DETAIL A
SCALE 0.200

NEXT ASSY	USED ON
APPLICATION	

UNLESS OTHERWISE NOTED
LINEAR DIMS. IN INCHES.
TOLERANCES
DECIMAL .XX+/- .XXX+/- FINISH ANGULAR +/-
DO NOT SCALE DRAWING
TREATMENT
FINISH
WEIGHT

CONTRACT NO.	
DRAWN	LMONTANEZ
CHECK	JLAFFITTE
DES	LMONTANEZ
ENGR	LMONTANEZ
Q.A.	LLAGOS
MFG.	
DESIGN ACTIVITY	LMONTANEZ
CUSTOMER	DME

NCERT Nanophotonic Center for Environmental Technology

TITLE: TRANSFORMER BOX MOUNTING DETAILS

DWG SIZE	CAGE CODE	DWG NO.	REV.
C		TRANSFORMER	01

SCALE 0.020 | REL. DATE 6/08/02 | SHEET 1 OF 2

DWG NO. TRANSFORMER SH 1 REV 0

REVISIONS			
LTR	DESCRIPTION	DATE	APPROVED

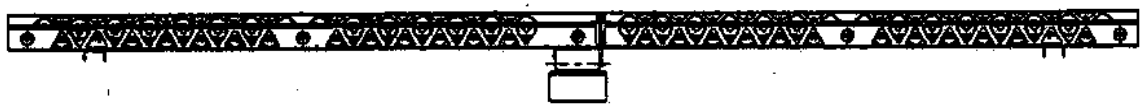

SCALE 0.100

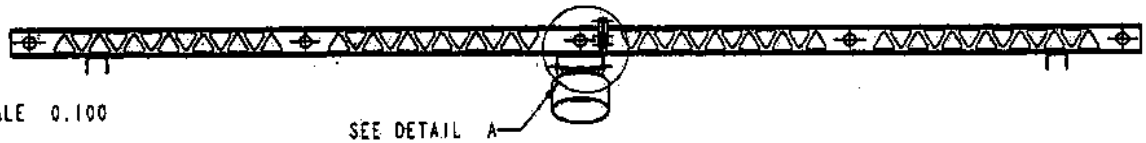

SCALE 0.100

SEE DETAIL A

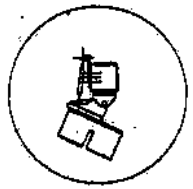

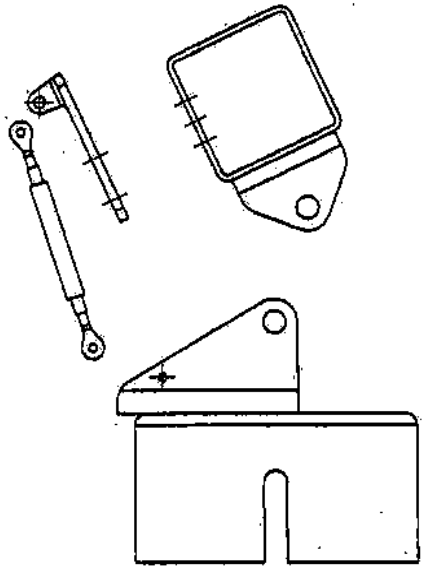

SCALE 0.500

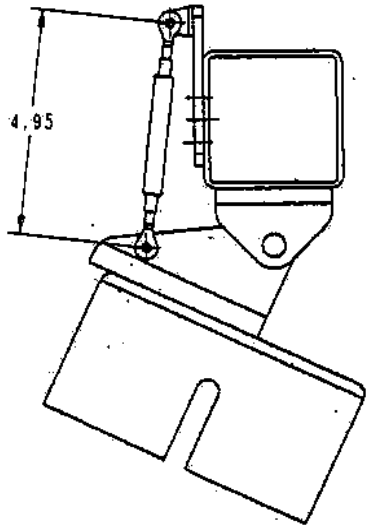

DETAIL B
SCALE 0.500

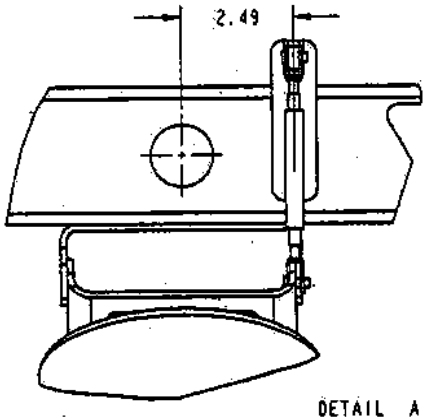

DETAIL A
SCALE 0.500

		UNLESS OTHERWISE NOTED LINEAR DIMS. IN INCHES. TOLERANCES DECIMAL .XX+/- .XXX+/- FINISH ANGULAR +/- DO NOT SCALE DRAWING	CONTRACT NO.
			DRAWN L.MONTANEZ
			CHECK J.LAFFITTE
			DES M.MORALES
			ENGR L.MONTANEZ
		TREATMENT	Q.A.
			MFG.
0676H2XX2092	MLB	FINISH	DESIGN ACTIVITY M.MORALES
NEXT ASSY	USED ON		
APPLICATION		WEIGHT	CUSTOMER DME

NMSU Manufacturing Center for Environmental Technology

TITLE: TURNBUCKLE DETAIL ASSEMBLY

DWG SIZE	CAGE CODE	DWG NO.	REV.
C		TURNBUCKLE	01

SCALE 0.036 | REL. DATE 5/18/02 | SHEET 1 OF 1

DWG NO. TURNBUCKLE

REVISIONS			
LTR	DESCRIPTION	DATE	APPROVED

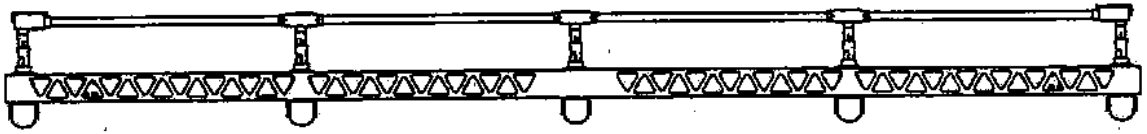

SCALE 0.100

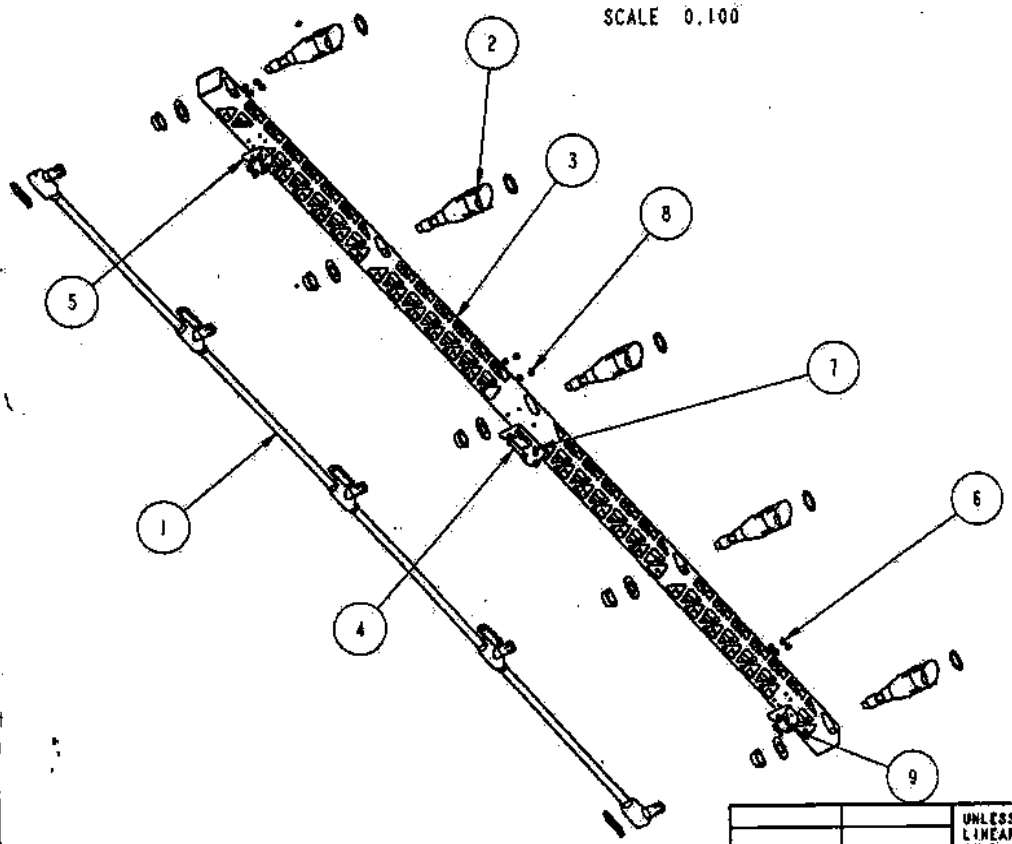

SCALE 0.100

ITEM	PART NUMBER	DESCRIPTION	QTY
9	D076M8XX8012		12
8	D076M8XX8010		12
7	D076M8XX8002		24
6	D076M8XX8001		12
5	D076M3XX3008		2
4	D076M3XX3007		1
3	D076M3XX3000		1
2	D076M2XX2004		5
1	D076L2XX2005		1

D076M2XX2002 HALOGEN LIGHT BAR	
NEXT ASSY	USED ON
APPLICATION	

UNLESS OTHERWISE NOTED
LINEAR DIMS. IN INCHES.
TOLERANCES
DECIMAL .XX+/- .XXX+/-
FINISH
ANGULAR +/-
DO NOT SCALE DRAWING

TREATMENT

FINISH

WEIGHT

CONTRACT NO.

DRAWN L.MONTANEZ
CHECK J.LAFFITTE
DES M.MORALES
ENGR M.MORALES
Q.A.
MFG.

DESIGN ACTIVITY
L.MONTANEZ

CUSTOMER
DWE

NIGHT Nanophotonic Center for Environmental Technology

TITLE: LIGHT BAR SUB ASSY

DWG SIZE	CAGE CODE	DWG NO.	REV.
C		D076M2XX2000	01

SCALE 0.833 | REL. DATE 4/28/02 | SHEET 1 OF 1

DWG NO. D076M2XX2000 SH 1 REV 01

REVISIONS			
LTR	DESCRIPTION	DATE	APPROVED

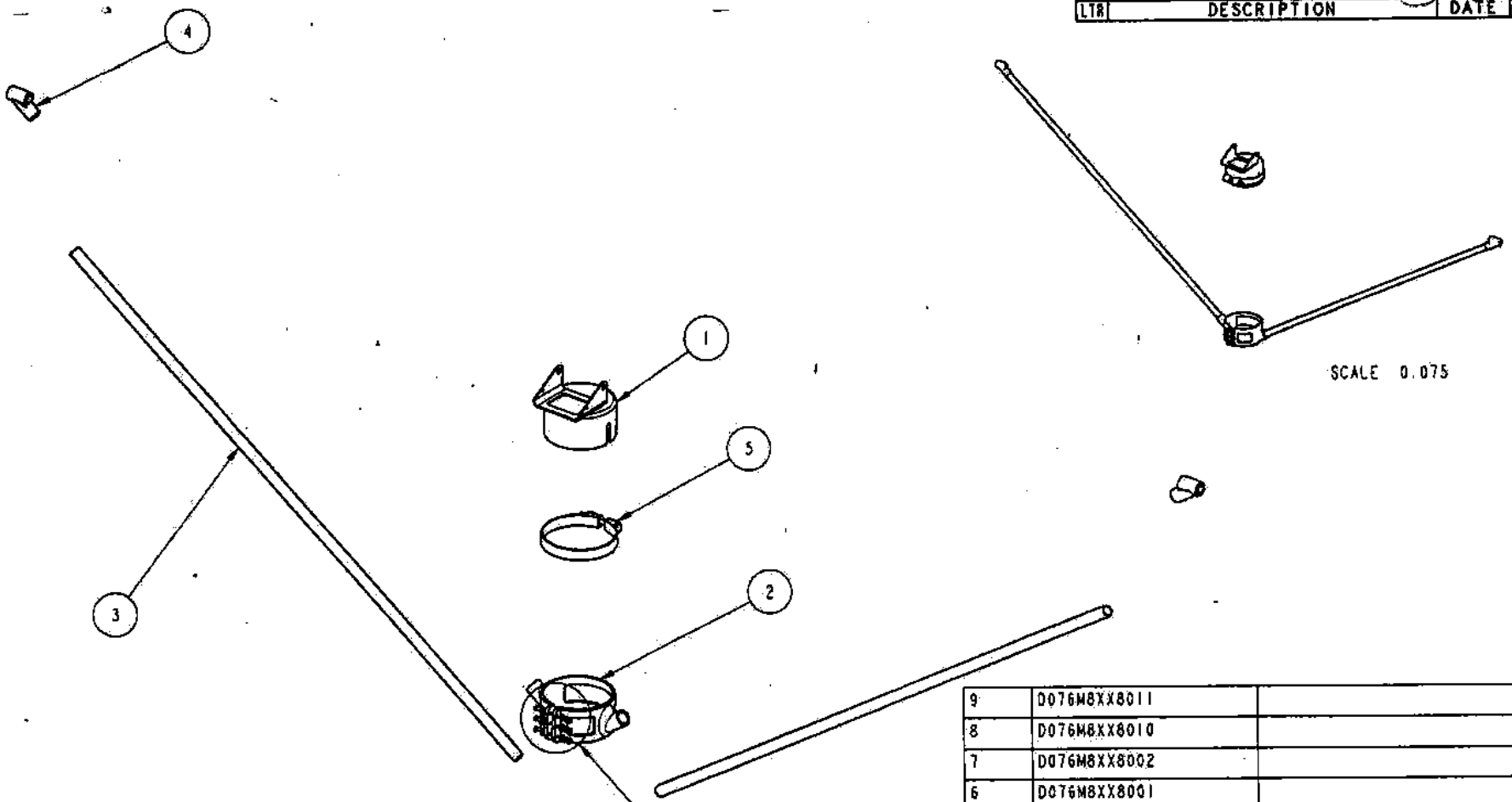

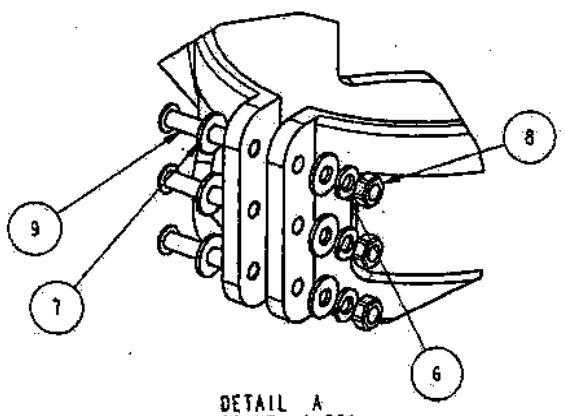

DETAIL A
SCALE 0.750

ITEM	PART NUMBER	DESCRIPTION	QTY
9	D076M8XX8011		3
8	D076M8XX8010		3
7	D076M8XX8002		6
6	D076M8XX8001		3
5	D076M4XX4003		1
4	D076M3XX3006		2
3	D076M3XX3005		2
2	D076M3XX3004		1
1	D076M2XX2003		1

DWG NO. D076M2XX2001 SH 1 REV 0

UNLESS OTHERWISE NOTED
LINEAR DIMS. IN INCHES.
TOLERANCES
DECIMAL .XX+/- .XXX+/-
FINISH
ANGULAR +/-
DO NOT SCALE DRAWING
TREATMENT
FINISH
WEIGHT

D076M2XX2002	HLB
NEXT ASSY	USED ON
APPLICATION	

CONTRACT NO.
DRAWN L.MONTANEZ
CHECK J.LAFFITTE
DES N.MORALES
ENGR L.MONTANEZ
Q.A.
MFG.
DESIGN ACTIVITY M.MORALES
CUSTOMER DME

NDET Manufacturing Center for Environmental Technology

TITLE: POST ATTACHMENTS

DWG SIZE C | CAGE CODE | DWG NO. D076M2XX2001 | REV. 01

SCALE 0.037 | REL. DATE 4/28/02 | SHEET 1 OF 1

REVISIONS			
LTR	DESCRIPTION	DATE	APPROVED

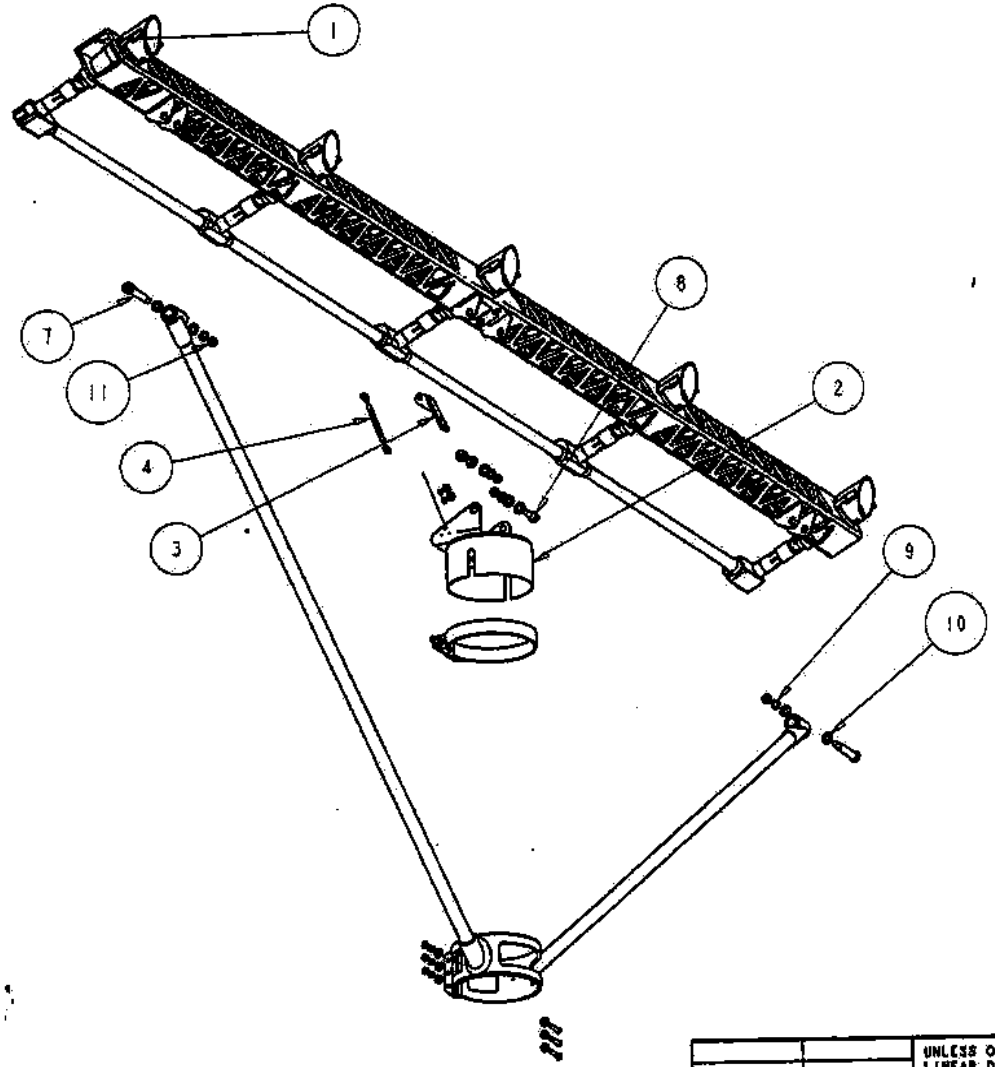

SCALE 0.15

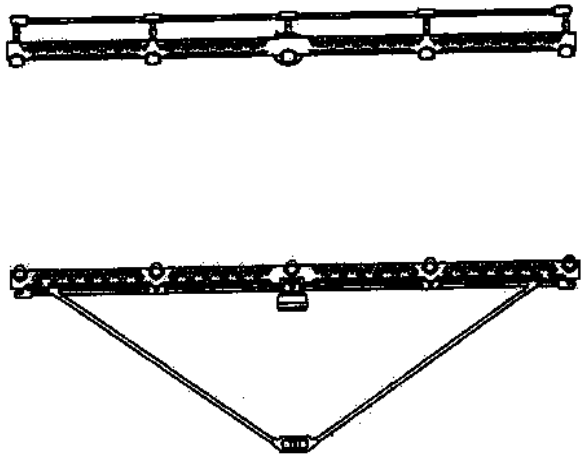

SCALE 0.05

ITEM	PART NUMBER	DESCRIPTION	QTY
11	D076M8XX8008		4
10	D076M8XX8007		8
9	D076M8XX8006		4
8	D076M8XX8005		2
7	D076M8XX8004		2
6	D076M8XX8002		2
5	D076M8XX8001		2
4	D076M4XX4002		1
3	D076M3XX3001		1
2	D076M2XX2001		1
1	D076M2XX2000		1

NEXT ASSY	USED ON
D076M2XX2002 HALOGEN LIGHT BAR	

APPLICATION

UNLESS OTHERWISE NOTED
LINEAR DIMS. IN INCHES.
TOLERANCES
DECIMAL .XX+/- .XXX+/-
FINISH
ANGULAR +/-
DO NOT SCALE DRAWING

TREATMENT

FINISH

WEIGHT

CONTRACT NO.	
DRAWN	M.MORALES
CHECK	J.LAFFITTE
DES	L.MONTANEZ
ENGR	M.MORALES
Q.A.	
MFG.	
DESIGN ACTIVITY	M.MORALES
CUSTOMER	DME

HBCET Hampton Roads Center for Environmental Technology

TITLE: POLE ASSEMBLY

DWG. SIZE	CAGE CODE	DWG NO.	REV.
C		D076M2XX2002	01

SCALE 0.020 | REL. DATE 4/28/02 | SHEET 1 OF 1

DWG NO. D076M2XX2002 SH 1 REV 0

REVISIONS			
LTR	DESCRIPTION	DATE	APPROVED

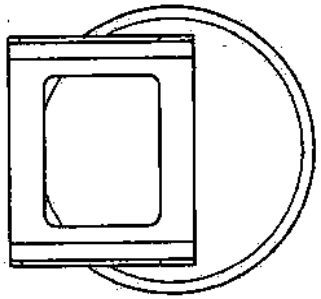

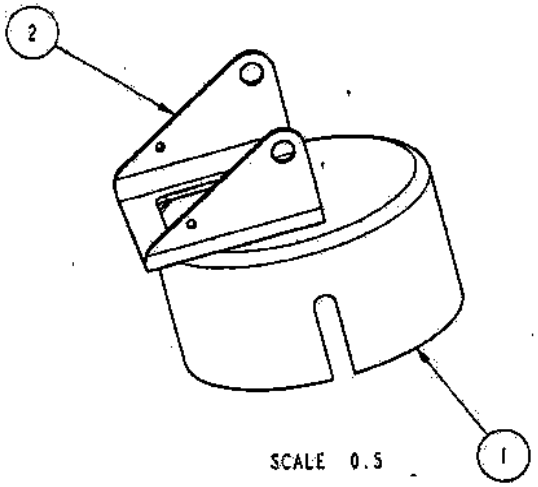

SCALE 0.5

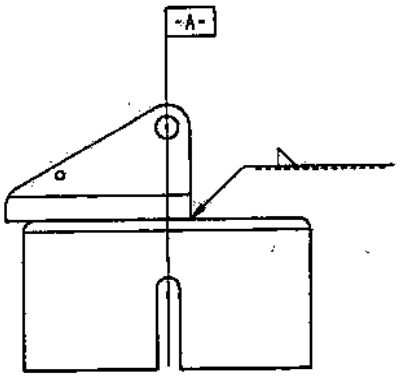

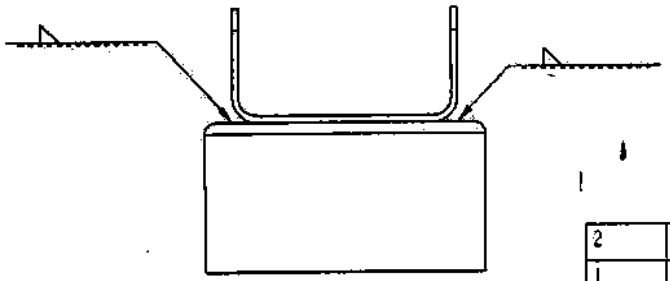

SCALE 0.5

ITEM	PART NUMBER	DESCRIPTION	QTY
2	D076M3XX3003		1
1	D076M3XX3002		1

D076M2XX2001	HALOGEN LIGHT
NEXT ASSY	USED ON
APPLICATION	

UNLESS OTHERWISE NOTED
LINEAR DIMS. IN INCHES.
TOLERANCES
DECIMAL .XX+/- .XXX+/-
FINISH
ANGULAR +/-
DO NOT SCALE DRAWING

TREATMENT

FINISH

WEIGHT

CONTRACT NO.	
DRAWN	L.MONTANEZ
CHECK	J.LAFFITTE
DES	L.MONTANEZ
ENGR	M.MORALES
Q.A.	
MFG.	
DESIGN ACTIVITY	M.MORALES
CUSTOMER	DME

NCBT Hemispheric Center for Environmental Technology

TITLE: POLE CAP ASSY

DWG SIZE	CAGE CODE	DWG NO.	REV.
C		D076M2XX2003	01

SCALE 0.500 | REL. DATE 4/28/02 | SHEET 1 OF 1

DWG NO. D076M2XX2003 SH 1 REV 01

REVISIONS			
LTR	DESCRIPTION	DATE	APPROVED

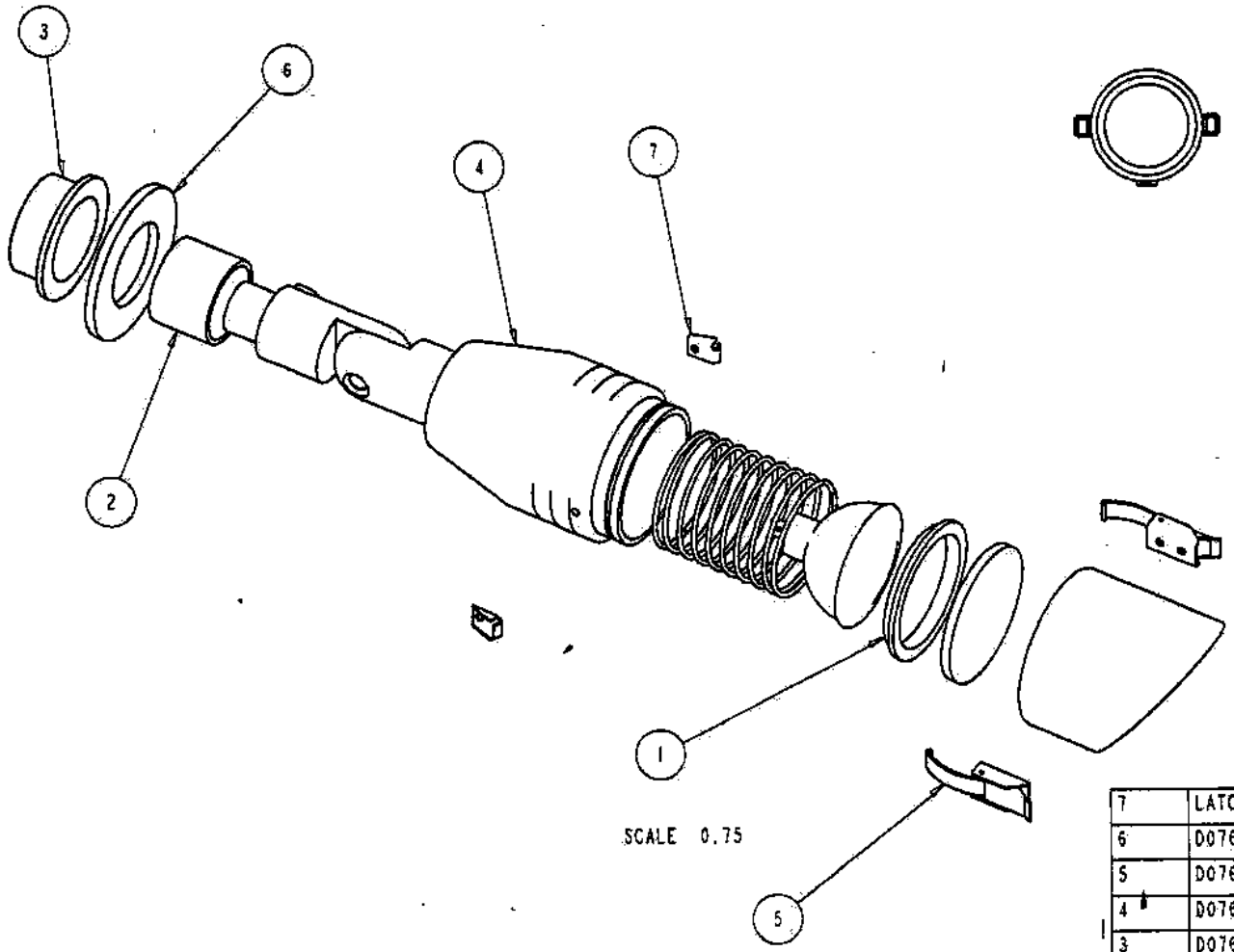

SCALE 0.75

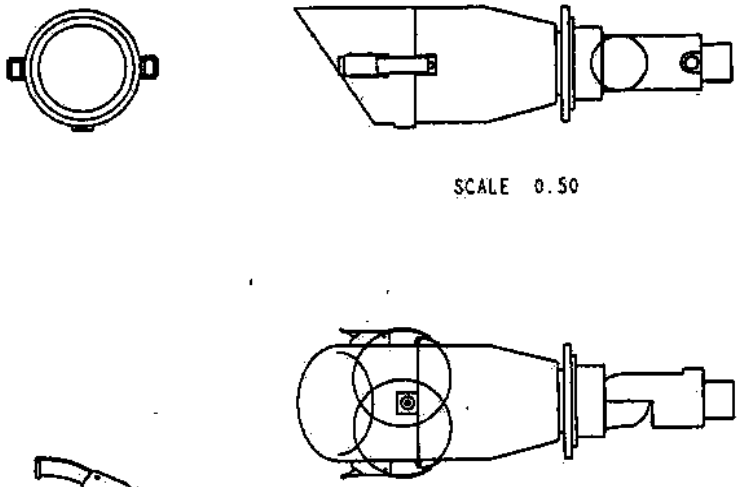

SCALE 0.50

ITEM	PART NUMBER	DESCRIPTION	QTY
7	LATCH_STRIKE		2
6	D076M8XX8009		1
5	D076M4XX4004		2
4	D076M4XX4001		1
3	D076M3XX3011		1
2	D076M3XX3010		1
1	D07[illegible]M3XX3009		1

NOTE:
ITEM 7: RIVETED TO LAMP BODY
ITEM 5: RIVETED TO LAMP CAP

D076M2XX2003	HLB
NEXT ASSY	USED ON
APPLICATION	

UNLESS OTHERWISE NOTED
LINEAR DIMS. IN INCHES.
TOLERANCES
DECIMAL .XX+/- .XXX+/-
FINISH
ANGULAR +/-
DO NOT SCALE DRAWING
TREATMENT
FINISH
WEIGHT

CONTRACT NO.	
DRAWN	M.MORALES
CHECK	J.LAFFITTE
DES	L/MONTANEZ
ENGR	M.MORALES
Q.A.	
MFG.	
DESIGN ACTIVITY	M.MORALES
CUSTOMER	DME

HBCET Hampton Center for Environmental Technology

TITLE: LIGHT MOUNT

DWG SIZE	CAGE CODE	DWG NO.	REV.
C		D076M2XX2004	.01

SCALE 0.500 | REL. DATE 4/28/02 | SHEET 1 OF 1

DWG NO. D076M2XX2004 SH 1 REV 4

REVISIONS			
LTR	DESCRIPTION	DATE	APPROVED

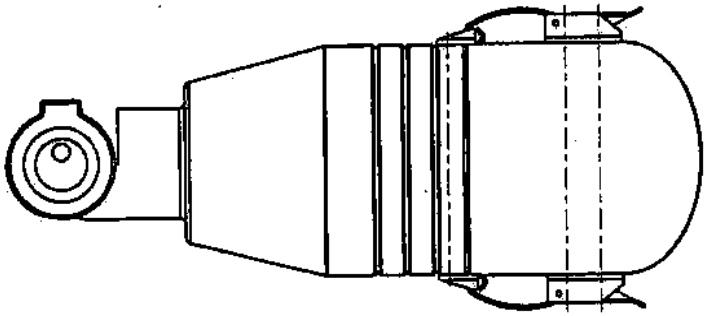

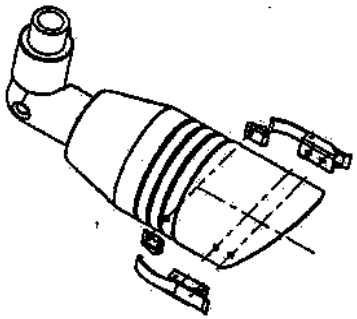

SCALE 0.500

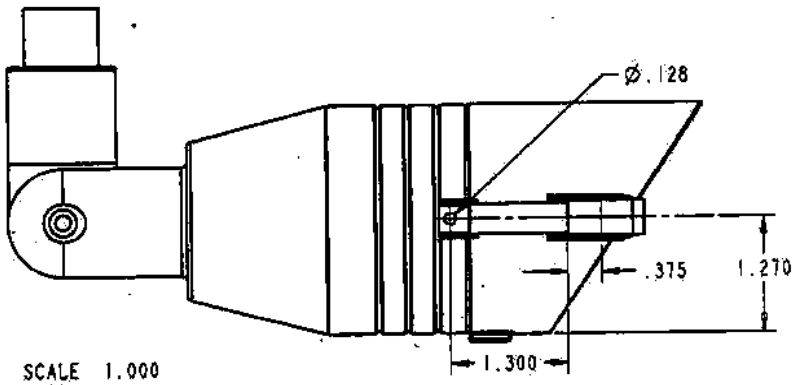

SCALE 1.000

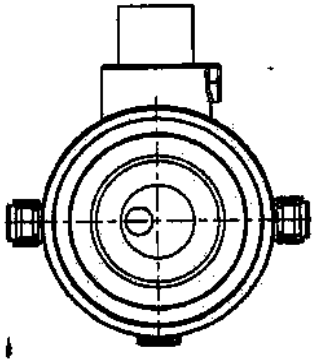

NOTES:
1. MAKE HOLES TO LAMP HOUSING AS PER DRAWING SPECIFICATIONS
2. HOLE FINISH:
   APPLY PRIMER AND PAINT COATS USING SPRAY METHOD IN ACCORDANCE WITH MIL-T-704.
   PRIME COAT SHOULD CONFORM TO:
   TT-P-645 FOR FERROUS METALS
   TT-P-1757 FOR ALUMINUM SURFACES
   INTERMEDIATE AND FINAL COATS SHOULD CONFORM TO TT-E-489
3. MOUNT LATCHES WITH RIVETS
4. APPLY SILICONE TO RIVETS BEFORE MOUNTING

		UNLESS OTHERWISE NOTED LINEAR DIMS. IN INCHES. TOLERANCES DECIMAL .XX+/- .XXX+/- FINISH ANGULAR +/- DO NOT SCALE DRAWING	CONTRACT NO.	
			DRAWN L.MONTANEZ	
			CHECK J.LAFFITTE	
			DES	
			ENGR L.MONTANEZ	
		TREATMENT	Q.A.	
			MFG.	
D061N2XX2004	HLB	FINISH	DESIGN ACTIVITY	
NEXT ASSY	USED ON			
APPLICATION		WEIGHT	CUSTOMER OWE	

MEST Mississippi Center for Environmental Technology

TITLE: LATCH MOUNTING ASSEMBLY

DWG SIZE	CAGE CODE	DWG NO.	REV
C		LATCH_SPECS	01

SCALE 0.500 | REL. DATE 5/18/02 | SHEET 1 OF 1

DWG NO. LATCH_SPECS | SH 1 | REV 0

REVISIONS			
LTR	DESCRIPTION	DATE	APPROVED

NOTES:
1. FINISH:
   MASK AREAS AS NOTED IN THE DRAWING
   USE AVIATION ORANGE PAINT NO. 12197 PER FEDERAL STD 595
   APPLY PRIMER AND PAINT COATS USING SPRAY METHOD
   IN ACCORDANCE WITH MIL-T-704.
   PRIME COAT SHOULD CONFORM TO:
      TT-P-645 FOR FERROUS METALS
      TT-P-1757 FOR ALUMINUM SURFACES
   INTERMEDIATE AND FINAL COATS SHOULD CONFORM TO TT-E-489
2. CONSTRUCT ASSEMBLY BY CUTTING ITEM 3 TO LENGTH
   AS TO MEET THE DIMENSIONS IN THIS DRAWING.

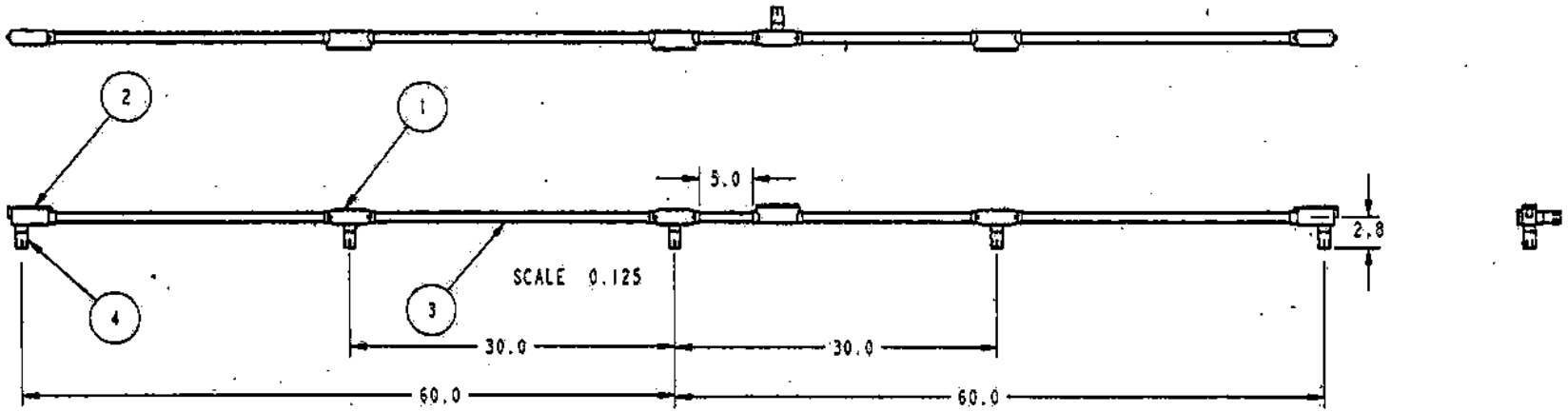

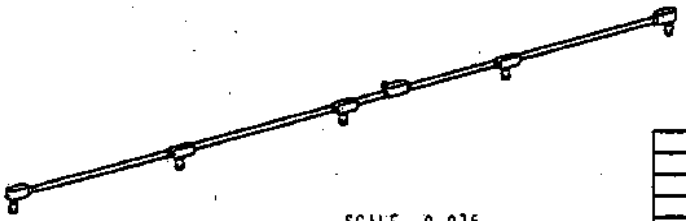

ITEM	PART NUMBER	DESCRIPTION	QTY
4	D076E4XX4010		6
3	D076E4XX4009		1
2	D076E4XX4007		2
1	D076E4XX4006		4

D076M2XX2000	MLB	NEXT ASSY	USED ON
APPLICATION			

UNLESS OTHERWISE NOTED
LINEAR DIMS. IN INCHES.
TOLERANCES
DECIMAL .XX+/- .XXX+/-
FINISH
ANGULAR +/-
DO NOT SCALE DRAWING
TREATMENT
FINISH
WEIGHT

CONTRACT NO.
DRAWN L.MONTANEZ
CHECK J.LAFFITTE
DES M.MORALES
ENGR M.MORALES
Q.A.
MFG.
DESIGN ACTIVITY M.MORALES
CUSTOMER DME

NCET Hemispheric Center for Environmental Technology

TITLE: ELECTRICAL CONDUIT SUB-ASSEMBLY

DWG SIZE	CAGE CODE	DWG NO.	REV.
C		D076E2XX2005	1

SCALE 0.040 | REL. DATE 4/28/02 | SHEET 1 OF 1

DWG NO. D076E2XX2005 SH 1 REV 1

REVISIONS			
LTR	DESCRIPTION	DATE	APPROVED

NOTE
1. MATERIAL: FIBERGLASS BOX BEAM
2. FINISH:
MASK AREAS AS NOTED IN THE DRAWING
USE AVIATION ORANGE PAINT NO. 12197 PER FEDERAL STD 595
APPLY PRIMER AND PAINT COATS USING SPRAY METHOD
IN ACCORDANCE WITH MIL-T-704.
PRIME COAT SHOULD CONFORM TO:
TT-P-645 FOR FERROUS METALS
TT-P-1757 FOR ALUMINUM SURFACES
INTERMEDIATE AND FINAL COATS SHOULD CONFORM TO TT-E-489

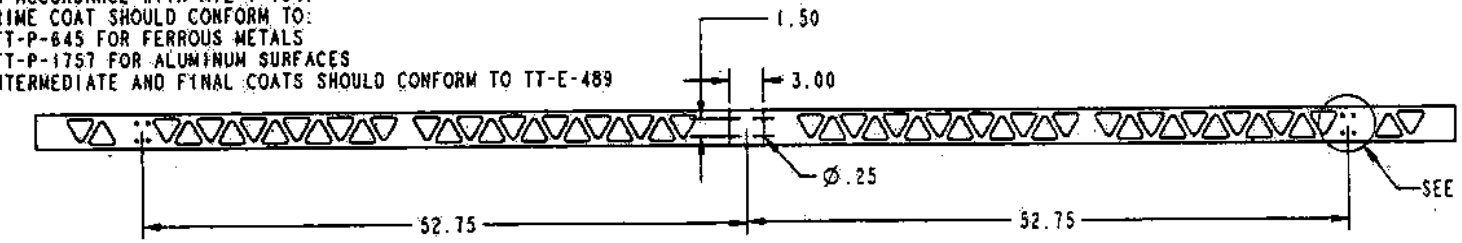

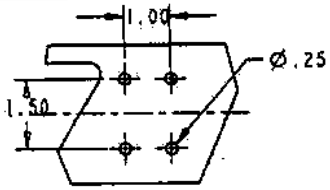

DETAIL C
SCALE 0.5

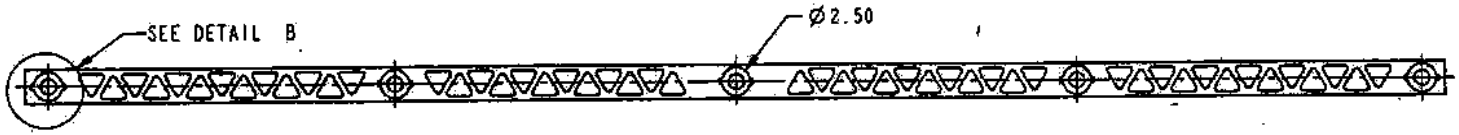

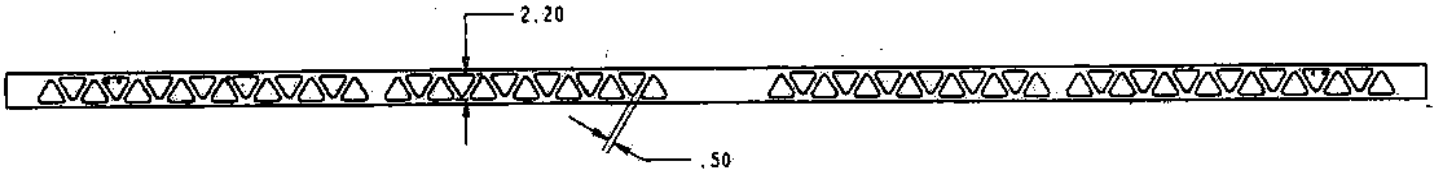

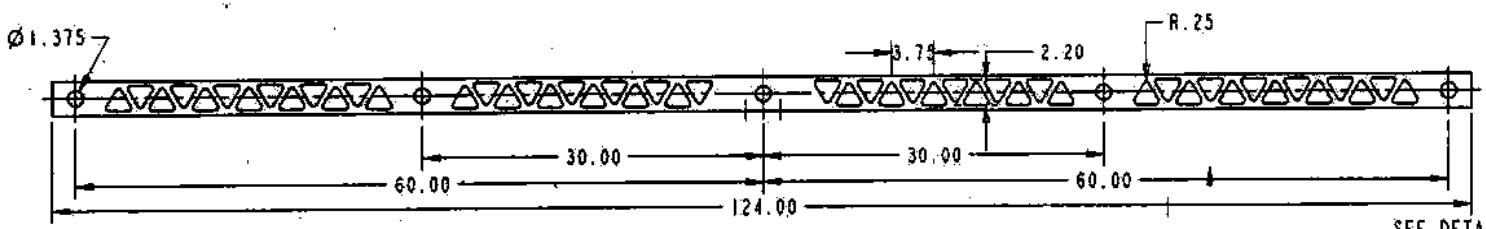

SCALE 0.125

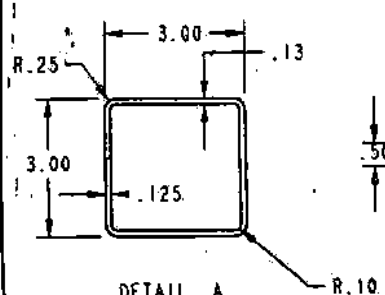

DETAIL A
SCALE 0.5

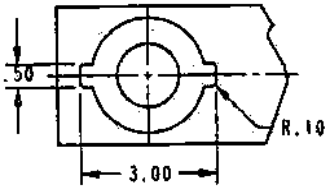

DETAIL B
SCALE 0.5

D076M2XX2000	HLB	UNLESS OTHERWISE NOTED LINEAR DIMS. IN INCHES. TOLERANCES DECIMAL .XX+/- .XXX+/- FINISH ANGULAR +/-	CONTRACT NO.		
NEXT ASSY	USED ON	DO NOT SCALE DRAWING	DRAWN	L.MONTANEZ	
APPLICATION		TREATMENT	CHECK	J.LAFFITTE	
			DES	M.MORALES	
			ENGR	M.MORALES	
			Q.A.		
			MFG.		
		FINISH	DESIGN ACTIVITY	M.MORALES	
		WEIGHT	CUSTOMER	DME	

HSRT Hemispheric Center for Environmental Technology

TITLE: FIBERGLASS BAR 3" X 3" X 1/8" X 10-1/2' LENGTH

DWG SIZE	CAGE CODE	DWG NO.	REV.
C		D076M3XX3000	1

SCALE 0.036 | REL. DATE 4/28/02 | SHEET 1 OF 1

DWG NO. D076M3XX3000 SH 1 REV 1

REVISIONS			
LTR	DESCRIPTION	DATE	APPROVED

NOTE:
1. MATERIAL: EPOXY RESIN FIBERGLASS
MATERIAL STRENGTH 25-KSI OR HIGHER AT 120°C
RESIN SHOULD BE TREATED FOR UV PROTECTION
2. FINISH:
MASK AREAS AS NOTED IN THE DRAWING
USE AVIATION ORANGE PAINT NO. 12197 PER FEDERAL STD 595
APPLY PRIMER AND PAINT COATS USING SPRAY METHOD
IN ACCORDANCE WITH MIL-T-704.
PRIME COAT SHOULD CONFORM TO:
TT-P-645 FOR FERROUS METALS
TT-P-1757 FOR ALUMINUM SURFACES
INTERMEDIATE AND FINAL COATS SHOULD CONFORM TO TT-E-489

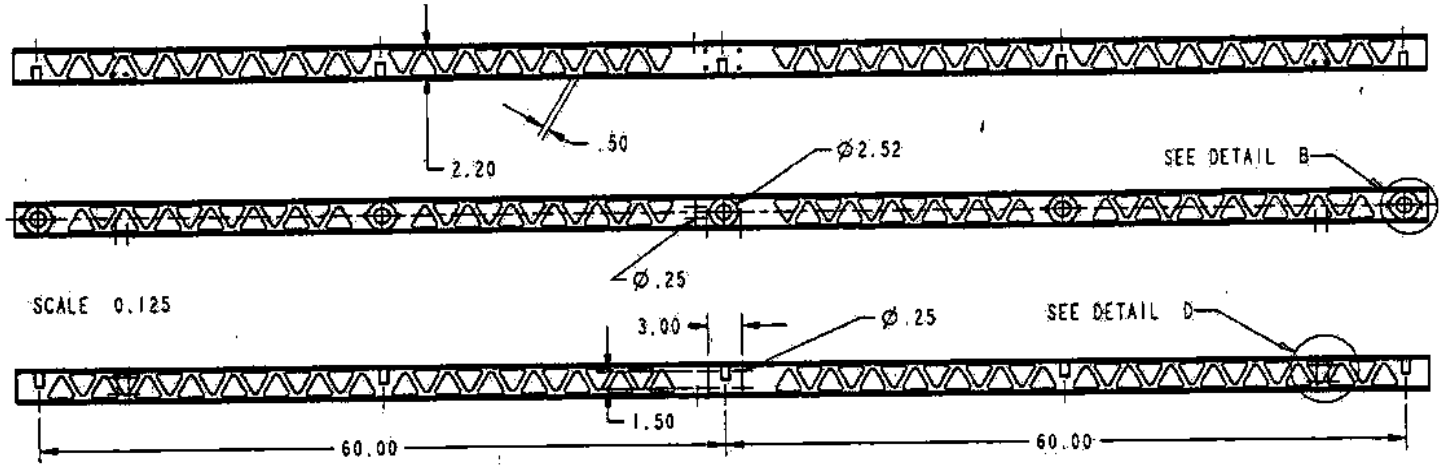

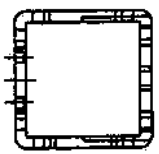

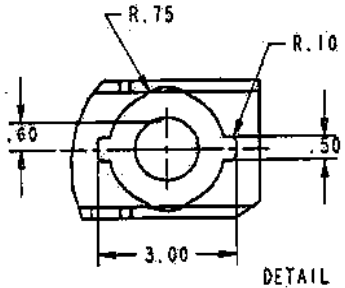

DETAIL B
SCALE 0.500

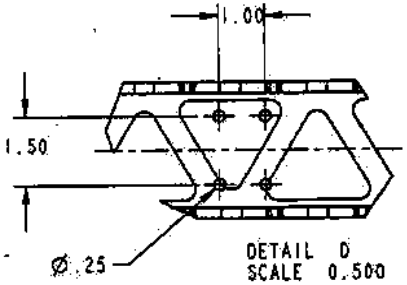

DETAIL D
SCALE 0.500

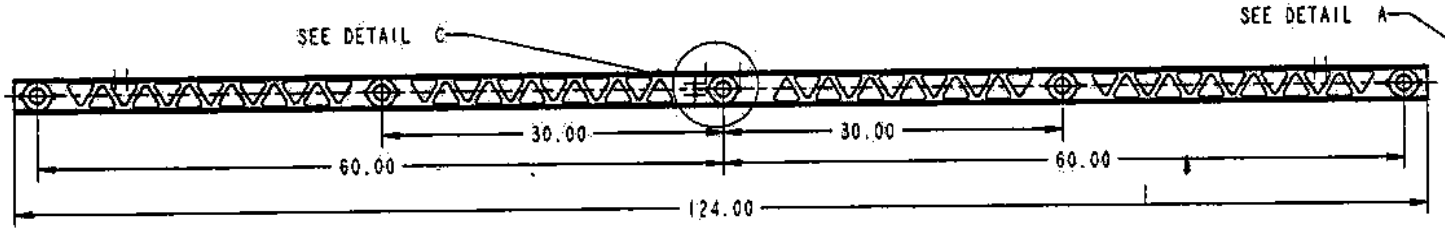

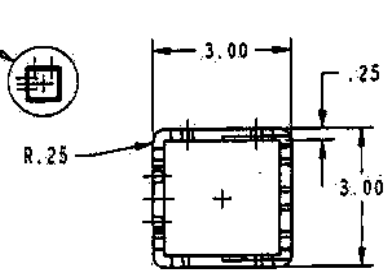

DETAIL A
SCALE 0.500

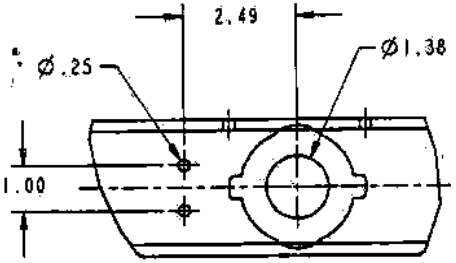

DETAIL C
SCALE 0.500

D076M2XX2000	NLB	FINISH	
NEXT ASSY	USED ON		
APPLICATION		WEIGHT	

UNLESS OTHERWISE NOTED
LINEAR DIMS. IN INCHES.
TOLERANCES
DECIMAL .XX+/- .XXX+/- FINISH ANGULAR +/-
DO NOT SCALE DRAWING
TREATMENT

CONTRACT NO.	
DRAWN	L.MONTANEZ
CHECK	J.LAFFITTE
DES	N.MORALES
ENGR	N.MORALES
Q.A.	
MFG.	
DESIGN ACTIVITY	M.MORALES
CUSTOMER	DME

TITLE:
FIBERGLASS BAR
3" X 3" X 1/4" X 10-1/2' LENGTH

DWG SIZE	CAGE CODE	DWG NO.	REV.
C		D076M3XX3000	1
SCALE .125	REL. DATE 6/15/02	SHEET 1 OF 1	

DWG NO. D076M3XX3000 SH 1 REV 1

REVISIONS			
LTR	DESCRIPTION	DATE	APPROVED

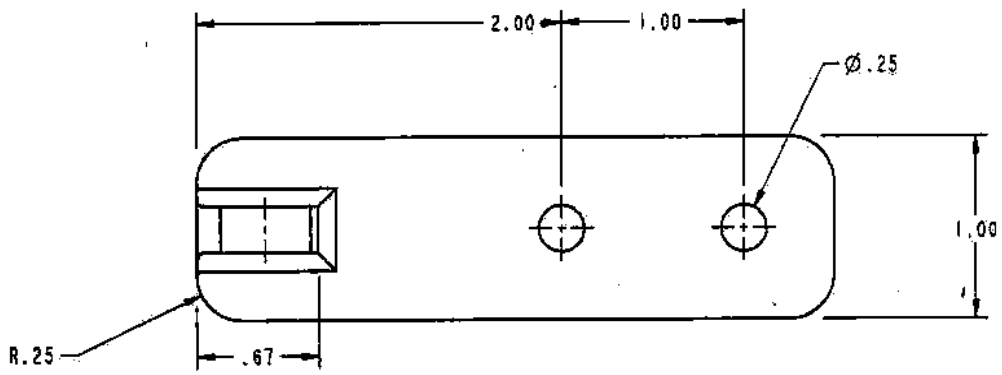

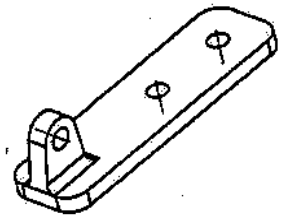

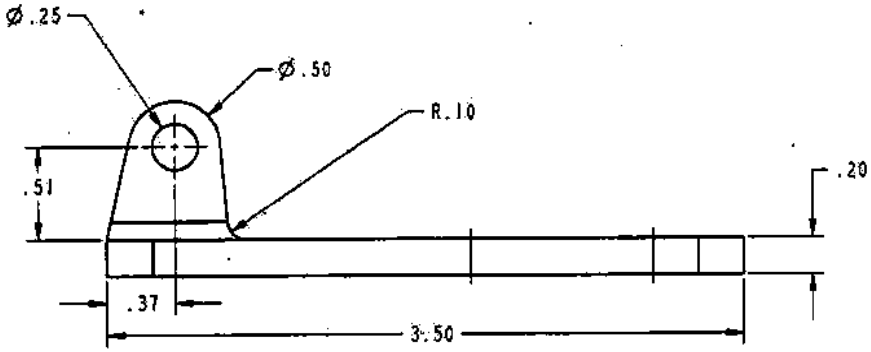

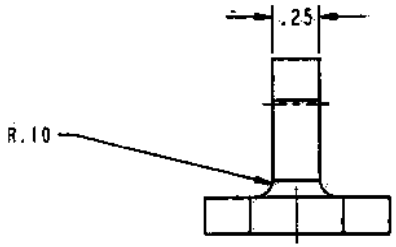

SCALE 2.000

NOTE:
1. MATERIAL: STAINLESS STEEL 316
2. FINISH:
MASK AREAS AS NOTED IN THE DRAWING
USE AVIATION ORANGE PAINT NO. 12197 PER FEDERAL STD 595
APPLY PRIMER AND PAINT COATS USING SPRAY METHOD
IN ACCORDANCE WITH MIL-T-704.
PRIME COAT SHOULD CONFORM TO:
TT-P-645 FOR FERROUS METALS
TT-P-1757 FOR ALUMINUM SURFACES
INTERMEDIATE AND FINAL COATS SHOULD CONFORM TO TT-E-489

D081M2XX2002	MLB	UNLESS OTHERWISE NOTED LINEAR DIMS. IN INCHES. TOLERANCES DECIMAL .XX+/- .XXX+/- FINISH ANGULAR +/-	CONTRACT NO.
NEXT ASSY	USED ON	DO NOT SCALE DRAWING	DRAWN L.MONTANEZ
APPLICATION		TREATMENT	CHECK J.LAFFITTE
		FINISH	DES. M.MORALES
		WEIGHT	ENGR L.MONTANEZ
			Q.A.
			MFG.
			DESIGN ACTIVITY M.MORALES
			CUSTOMER DNE

TITLE: ANGLE CLAMP TURNBUCKLE

DWG SIZE	CAGE CODE	DWG NO.	REV.
C		D08M3XX3001	01

SCALE 1.000 REL. DATE 5/18/02 SHEET 1 OF 1

DWG NO. D08M3XX3001 SH 1 REV 01

REVISIONS			
LTR	DESCRIPTION	DATE	APPROVED

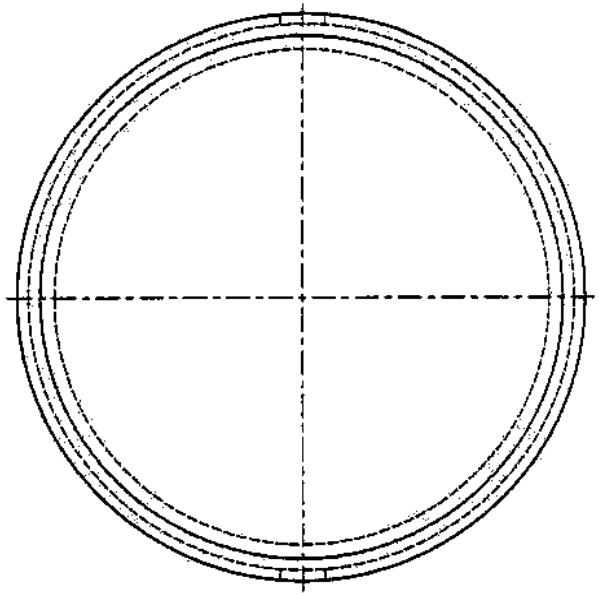

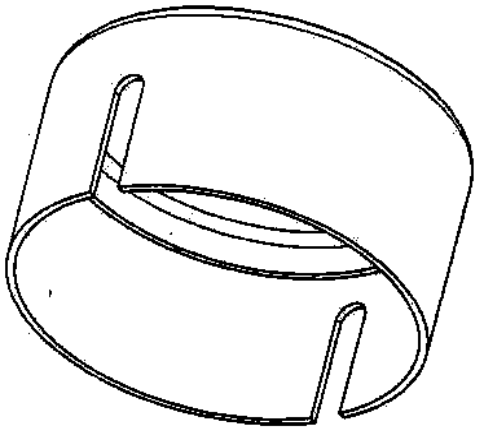

SCALE 0.75

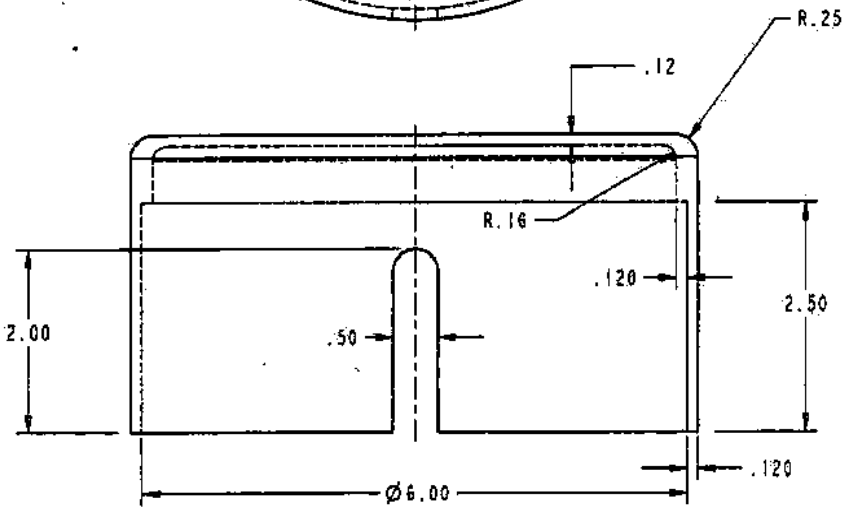

NOTES:
1. MATERIAL: STAINLESS STEEL 316
2. FINISH:
MASK AREAS AS NOTED IN THE DRAWING
USE AVIATION ORANGE PAINT NO. 12197 PER FEDERAL STD 595
APPLY PRIMER AND PAINT COATS USING SPRAY METHOD
IN ACCORDANCE WITH MIL-T-704.
PRIME COAT SHOULD CONFORM TO:
TT-P-645 FOR FERROUS METALS
TT-P-1757 FOR ALUMINUM SURFACES
INTERNEDIATE AND FINAL COATS SHOULD CONFORM TO TT-E-489

SCALE 1.0

D076M2XX2003	HLB
NEXT ASSY	USED ON
APPLICATION	

UNLESS OTHERWISE NOTED
LINEAR DIMS. IN INCHES.
TOLERANCES
DECIMAL .XX+/- .XXX+/-
FINISH
ANGULAR +/-
DO NOT SCALE DRAWING
TREATMENT
FINISH
WEIGHT

CONTRACT NO.	
DRAWN	L.MONTANEZ
CHECK	J.LAFFITTE
DES	M.MORALES
ENGR	M.MORALES
Q.A.	
MFG.	
DESIGN ACTIVITY	M.MORALES
CUSTOMER	DME

NMSU Manufacturing Center for Environmental Technology

TITLE: POLE CAP 6' POLE

DWG SIZE	CAGE CODE	DWG NO.	REV.
C		D076M3XX3002_	1

SCALE 1.000 | REL. DATE 4/28/02 | SHEET 1 OF 1

DWG NO. D076M3XX3002_ SH 1 REV 1

REVISIONS			
LTR	DESCRIPTION	DATE	APPROVED

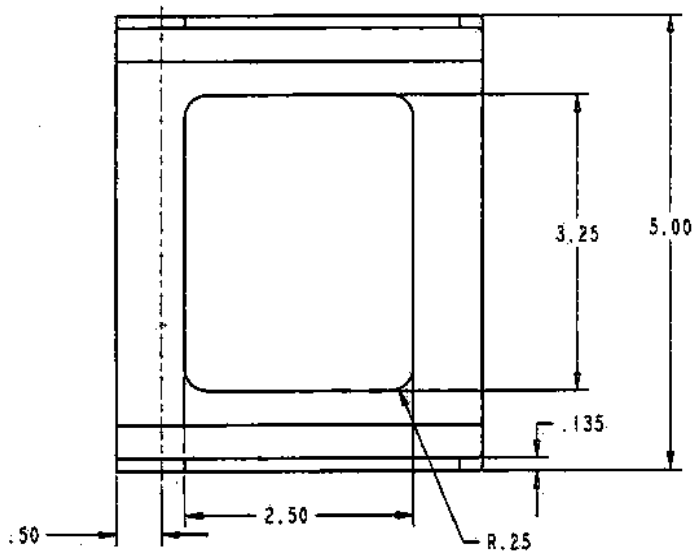

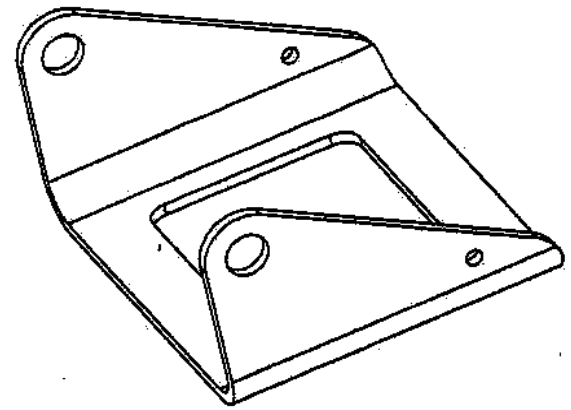

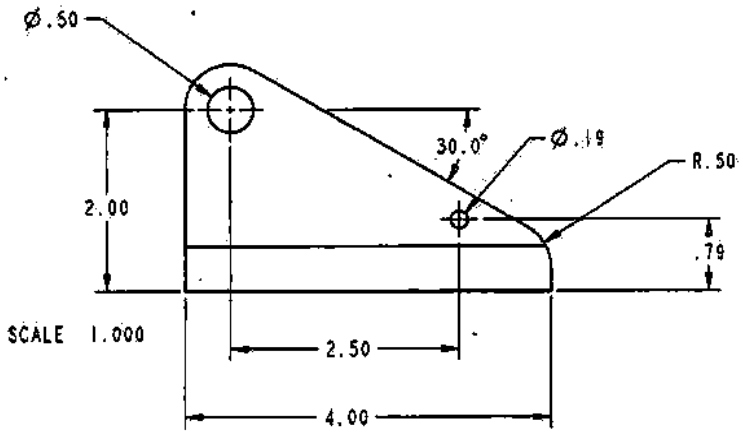

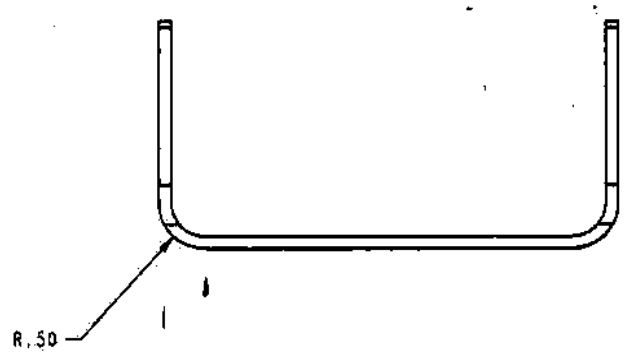

NOTE:
1. MATERIAL: STAINLESS STEEL 316
2. FINISH:
MASK AREAS AS NOTED IN THE DRAWING
USE AVIATION ORANGE PAINT NO. 12197 PER FEDERAL STD 595
APPLY PRIMER AND PAINT COATS USING SPRAY METHOD
IN ACCORDANCE WITH MIL-T-704.
PRIME COAT SHOULD CONFORM TO:
TT-P-645 FOR FERROUS METALS
TT-P-1757 FOR ALUMINUM SURFACES
INTERMEDIATE AND FINAL COATS SHOULD CONFORM TO TT-E-489

D076M2XX2003	HLS	UNLESS OTHERWISE NOTED LINEAR DIMS. IN INCHES. TOLERANCES DECIMAL .XX+/- .XXX+/- FINISH ANGULAR +/- DO NOT SCALE DRAWING	CONTRACT NO.
NEXT ASSY	USED ON	TREATMENT	DRAWN L.MONTANEZ
APPLICATION		FINISH	CHECK J.LAFFITTE
		WEIGHT	DES M.MORALES
			ENGR L.MONTANEZ
			Q.A.
			MFG.
			DESIGN ACTIVITY M.MORALES
			CUSTOMER DME

NCET Nanotechnology Center for Environmental Technology

TITLE: CAP BRACKET 5" POLE

DWG SIZE	CAGE CODE	DWG NO.	REV.
C		D076M3XX3003	01

SCALE 1.000 | REL. DATE 5/20/02 | SHEET 1 OF 1

DWG NO. D076M3XX3003 SH 1 REV 0

REVISIONS			
LTR	DESCRIPTION	DATE	APPROVED

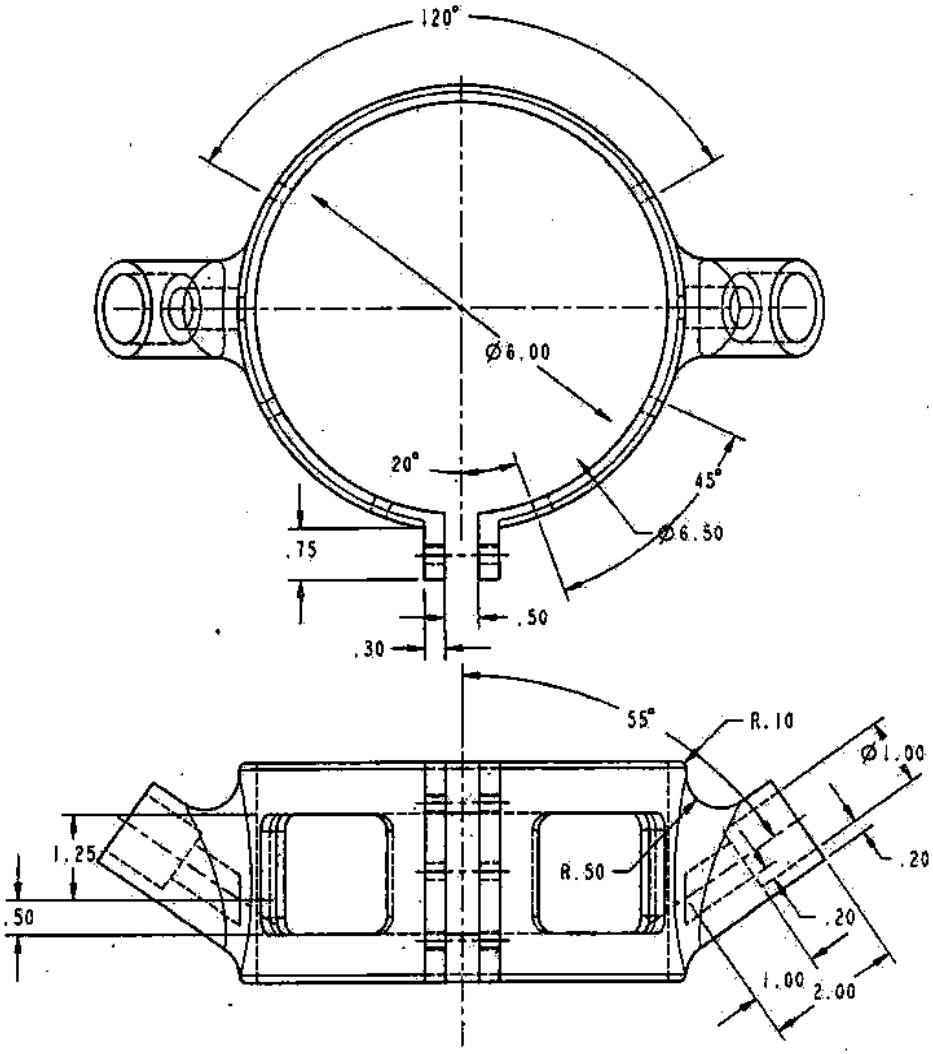

SCALE 0.75

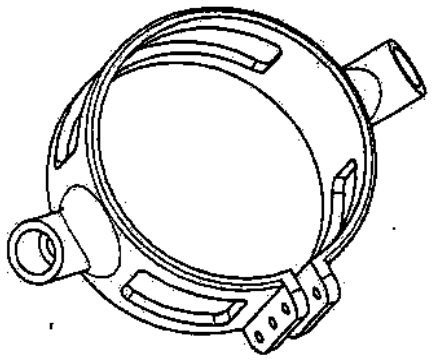

SCALE 0.50

NOTES:
1. MATERIAL: ALUMINUM 6061
2. FINISH:
~~APPLY ANODIZING COATING~~ PRIOR TO PAINTING
MASK AREAS AS NOTED IN THE DRAWING
USE AVIATION ORANGE PAINT NO. 12197 PER FEDERAL STD 595
APPLY PRIMER AND PAINT COATS USING SPRAY METHOD
IN ACCORDANCE WITH MIL-T-704.
PRIME COAT SHOULD CONFORM TO:
TT-P-645 FOR FERROUS METALS
TT-P-1757 FOR ALUMINUM SURFACES
INTERMEDIATE AND FINAL COATS SHOULD CONFORM TO TT-E-489

D076M2XX2001	HLB
NEXT ASSY	USED ON
APPLICATION	

UNLESS OTHERWISE NOTED LINEAR DIMS. IN INCHES. TOLERANCES DECIMAL .XX+/- .XXX+/- FINISH ANGULAR +/-
DO NOT SCALE DRAWING.
TREATMENT
FINISH
WEIGHT

CONTRACT NO.	
DRAWN	L.MONTANEZ
CHECK	J.LAFFITTE
DES	M.MORALES
ENGR	M.MORALES
Q.A.	
MFG.	
DESIGN ACTIVITY	M.MORALES
CUSTOMER	DME

NMSU Manufacturing Center for Environmental Technology

TITLE: MALSR SUPPORT BRACKET 6" POLE

DWG SIZE	CAGE CODE	DWG NO.	REV.
C		D076M3XX3004	1

SCALE 0.500 | REL. DATE 4/28/02 | SHEET 1 OF 1

DWG NO. D076M3XX3004 SH 1 REV 1

REVISIONS			
LTR	DESCRIPTION	DATE	APPROVED

NOTES:
1. MATERIAL: FIBERGLASS PIPE 1"OD
2. FINISH:
   MASK AREAS AS NOTED IN THE DRAWING
   USE AVIATION ORANGE PAINT NO. 12197 PER FEDERAL STD 595
   APPLY PRIMER AND PAINT COATS USING SPRAY METHOD
   IN ACCORDANCE WITH MIL-T-704.
   PRIME COAT SHOULD CONFORM TO:
   TT-P-645 FOR FERROUS METALS
   TT-P-1757 FOR ALUMINUM SURFACES
   INTERMEDIATE AND FINAL COATS SHOULD CONFORM TO TT-E-489

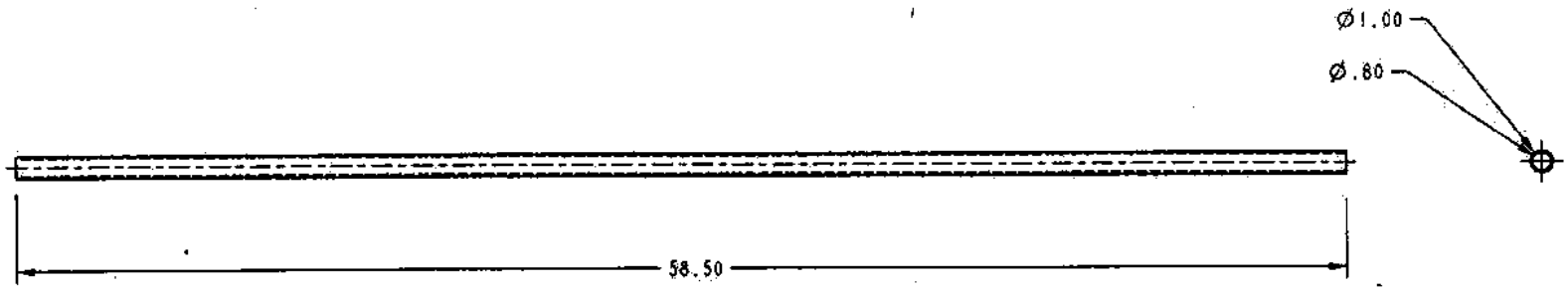

SCALE 0.25

D076M2XX2001	HLB	UNLESS OTHERWISE NOTED LINEAR DIMS. IN INCHES. TOLERANCES DECIMAL .XX+/- .XXX+/- FINISH ANGULAR +/- DO NOT SCALE DRAWING.	CONTRACT NO.	HGRT Hemispheric Center for Environmental Technology	TITLE: OUTRIGGER TUBE
NEXT ASSY	USED ON	TREATMENT	DRAWN L.MONTAREZ		
APPLICATION		FINISH	CHECK J.LAFFITTE		
		WEIGHT	DES N.MORALES		
			ENGR N.MORALES		
			Q.A.		
			MFG.		
			DESIGN ACTIVITY M.MORALES	DWG SIZE C / CAGE CODE	DWG NO. D076M3XX3005 / REV. 1
			CUSTOMER DME	SCALE 0.100 / REL. DATE 4/28/02	SHEET 1 OF 1

DWG NO. D076M3XX3005 SH 1 REV 1

REVISION			
LTR	DESCRIPTION	DATE	APPROVED

NOTES:
1. MATERIAL: STAINLESS STEEL 316
2. FINISH:
MASK AREAS AS NOTED IN THE DRAWING.
USE AVIATION ORANGE PAINT NO. 12197 PER FEDERAL STD 595
APPLY PRIMER AND PAINT COATS USING SPRAY METHOD
IN ACCORDANCE WITH MIL-T-704.
PRIME COAT SHOULD CONFORM TO:
TT-P-645 FOR FERROUS METALS
TT-P-1757 FOR ALUMINUM SURFACES
INTERMEDIATE AND FINAL COATS SHOULD CONFORM TO TT-E-489

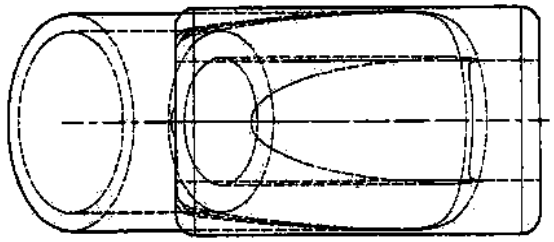

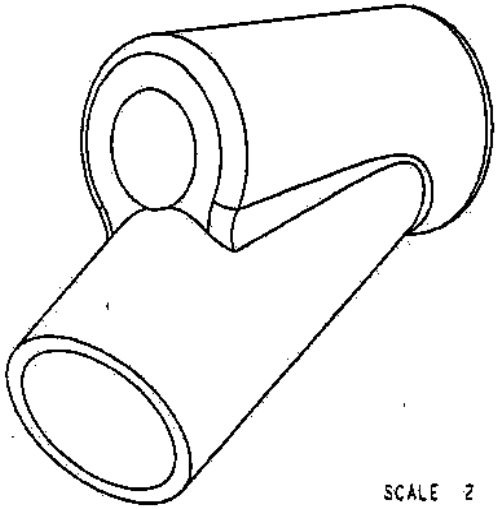

SCALE 2

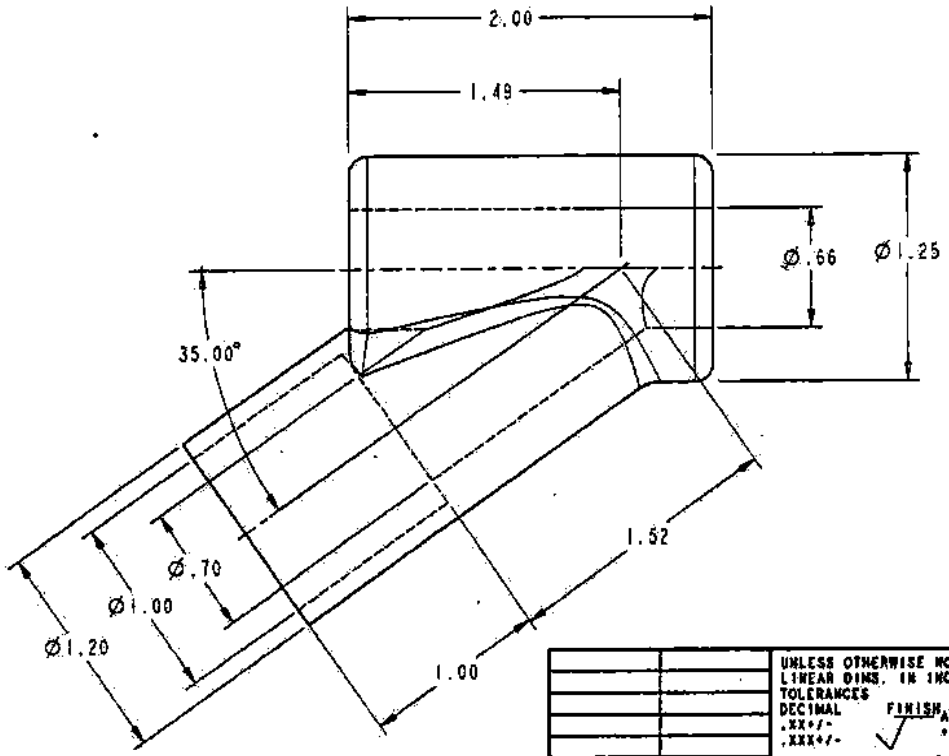

SCALE 2

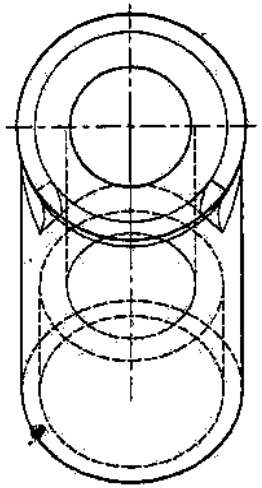

D076M2XX2041	HLB	NEXT ASSY	USED ON
APPLICATION			

UNLESS OTHERWISE NOTED
LINEAR DIMS. IN INCHES.
TOLERANCES
DECIMAL .XX+/- .XXX+/- FINISH ANGULAR +/-
DO NOT SCALE DRAWING
TREATMENT
FINISH
WEIGHT

CONTRACT NO.
DRAWN L.MONTANEZ
CHECK J.LAFFITTE
DES M.MORALES
ENGR M.MORALES
Q.A.
MFG.
DESIGN ACTIVITY M.MORALES
CUSTOMER DME

NCET Hampton Center for Environmental Technology

TITLE: OUTRIGGER CLAMP

DWG SIZE	CAGE CODE	DWG NO.	REV.
C		D076M3XX3006_	1

SCALE 1.000 | REL. DATE 4/28/02 | SHEET 1 OF 1

DWG NO. D076M3XX3006_ SH 1 REV 1

REVISIONS			
LTR	DESCRIPTION	DATE	APPROVED

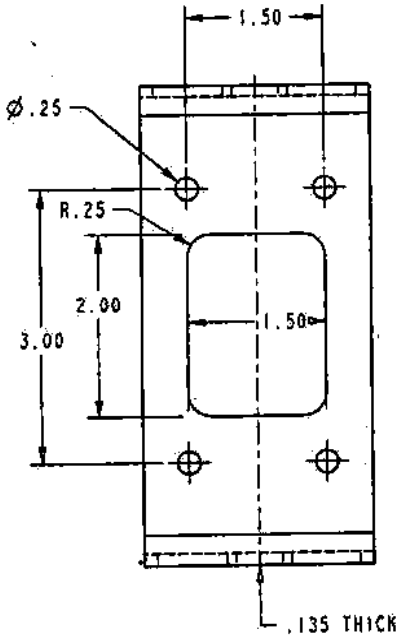

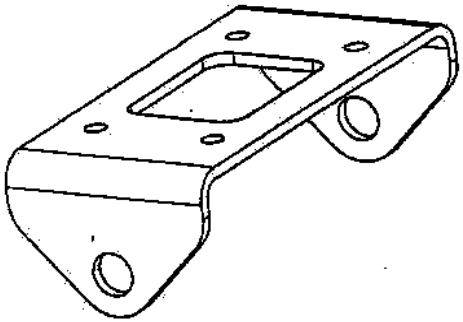

SCALE 1

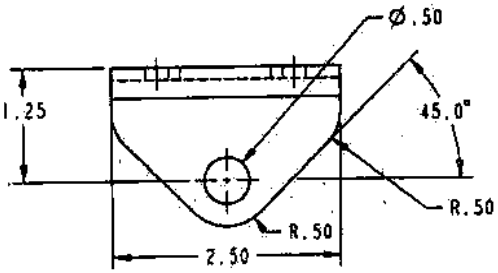

SCALE 1

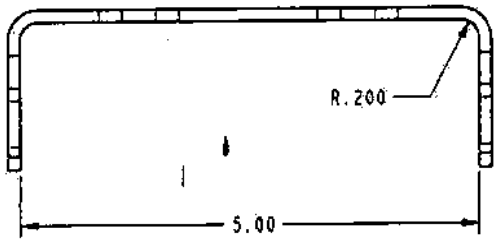

NOTES:
1. MATERIAL: STAINLESS STEEL 316
2. FINISH:
~~APPLY ANODIZING COATING PRIOR TO PAINTING~~
MASK AREAS AS NOTED IN THE DRAWING
USE AVIATION ORANGE PAINT NO. 12197 PER FEDERAL STD 595
APPLY PRIMER AND PAINT COATS USING SPRAY METHOD
IN ACCORDANCE WITH MIL-T-704.
PRIME COAT SHOULD CONFORM TO:
TT-P-645 FOR FERROUS METALS
TT-P-1757 FOR AUMINUM SURFACES
INTERMEDIATE AND FINAL COATS SHOULD CONFORM TO TT-E-489

D076M2XX2040	HLB	NEXT ASSY	USED ON
APPLICATION			

UNLESS OTHERWISE NOTED LINEAR DIMS. IN INCHES.
TOLERANCES
DECIMAL .XX+/- .XXX+/- FINISH ✓ ANGULAR +/-
DO NOT SCALE DRAWING
TREATMENT
FINISH
WEIGHT

CONTRACT NO.
DRAWN L.MONTANEZ
CHECK J.LAFFITTE
DES N.MORALES
ENGR N.MORALES
Q.A.
MFG.
DESIGN ACTIVITY N.MORALES
CUSTOMER DME

NDET Nondestructive Evaluation for Environmental Technology

TITLE: FRAME SUPPORT 1

DWG SIZE C | CAGE CODE | DWG NO. D076M3XX3007 | REV. 1

SCALE 1.000 | REL. DATE 4/28/02 | SHEET 1 OF 1

DWG NO. D076M3XX3007 SH 1 REV 1

REVISIONS			
LTR	DESCRIPTION	DATE	APPROVED

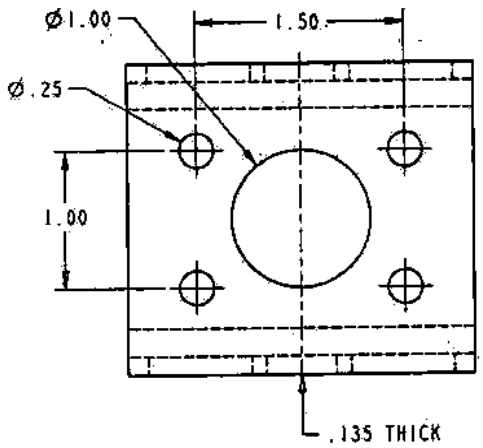

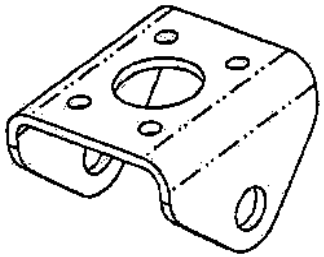

SCALE 1

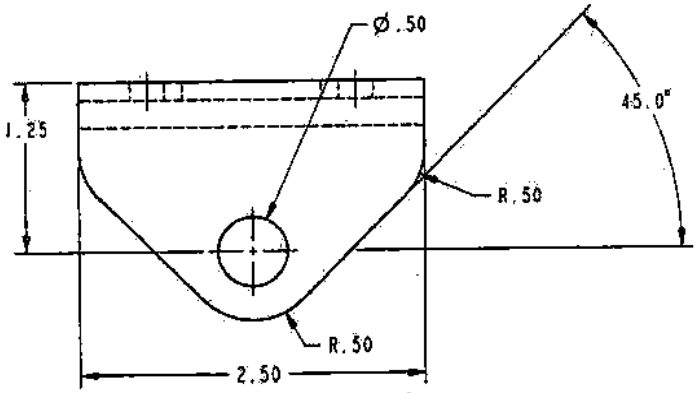

SCALE 1.5

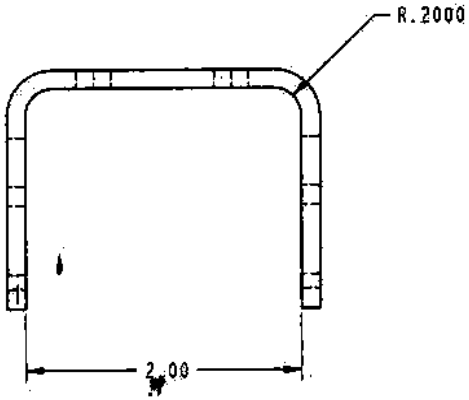

NOTES:
1. MATERIAL: STAINLESS STEEL 316
2. FINISH:
~~APPLY ANODIZING COATING PRIOR TO PAINTING~~
MASK AREAS AS NOTED IN THE DRAWING
USE AVIATION ORANGE PAINT NO. 12197 PER FEDERAL STD 595
APPLY PRIMER AND PAINT COATS USING SPRAY METHOD
IN ACCORDANCE WITH MIL-T-704.
PRIME COAT SHOULD CONFORM TO:
TT-P-645 FOR FERROUS METALS
TT-P-1757 FOR ALUMINUM SURFACES
INTERMEDIATE AND FINAL COATS SHOULD CONFORM TO TT-E-489

D076M2XX2000	HLB	UNLESS OTHERWISE NOTED LINEAR DIMS. IN INCHES. TOLERANCES DECIMAL .XX+/- .XXX+/- FINISH ANGULAR +/- DO NOT SCALE DRAWING	CONTRACT NO.	
NEXT ASSY:	USED ON	TREATMENT	DRAWN L.MORTANEZ	
APPLICATION		FINISH	CHECK J.CAFFETTE	
		WEIGHT	DES M.MORALES	
			ENGR M.MORALES	
			Q.A.	
			MFG.	
			DESIGN ACTIVITY M.MORALES	
			CUSTOMER DME	

NCERT Nanotechnologies Center for Environmental Technology

TITLE: FRAME SUPPORT 2

DWG SIZE	CAGE CODE	DWG NO.	REV.
C		D076M3XX3008	1

SCALE 1.000 | REL. DATE 4/28/02 | SHEET 1 OF 1

DWG NO. D076M3XX3008 | SH 1 | REV 1

REVISIONS			
LTR	DESCRIPTION	DATE	APPROVED

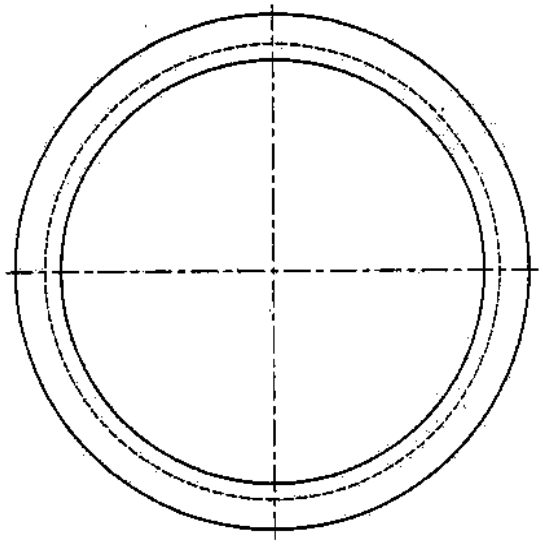

SCALE 1.5

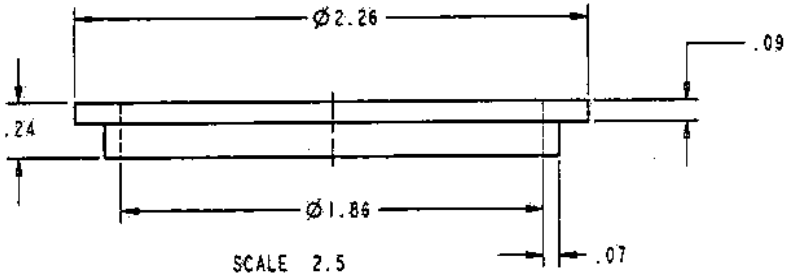

SCALE 2.5

NOTES:
1. MATERIAL: ALUMINUM T6061
2. FINISH:
APPLY ANODIZING COATING
IN ACCORDANCE WITH MIL-T-704.
PRIME COAT SHOULD CONFORM TO:
TT-P-1757 FOR ALUMINUM SURFACES

		UNLESS OTHERWISE NOTED LINEAR DIMS. IN INCHES. TOLERANCES DECIMAL .XX+/- .XXX+/- FINISH ANGULAR +/- DO NOT SCALE DRAWING	CONTRACT NO.		
			DRAWN	L.MONTANEZ	
			CHECK	J.LAFFITTE	
			DES	M.MORALES	
			ENGR	M.MORALES	
		TREATMENT	Q.A.		
			MFG.		
D076M4XX4001	HLB	FINISH	DESIGN ACTIVITY	M.MORALES	
NEXT ASSY	USED ON				
APPLICATION		WEIGHT	CUSTOMER	DNE	

MCET Massachusetts Center for Environmental Technology

TITLE: LIGHT SPACER

DWG SIZE	CAGE CODE	DWG NO.	REV.
C		D076M3XX3009	1

SCALE 1.000 | REL. DATE 4/28/02 | SHEET 1 OF 1

DWG NO. D076M3XX3009 SH 1 REV 1

REVISIONS			
LTR	DESCRIPTION	DATE	APPROVED

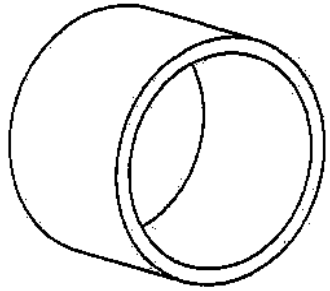

SCALE 2

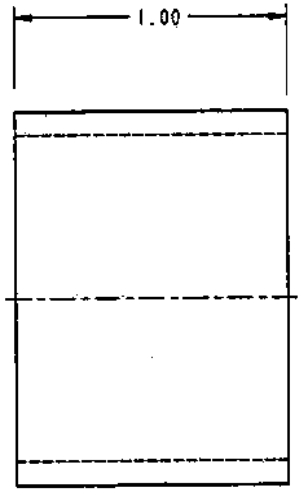

SCALE 3

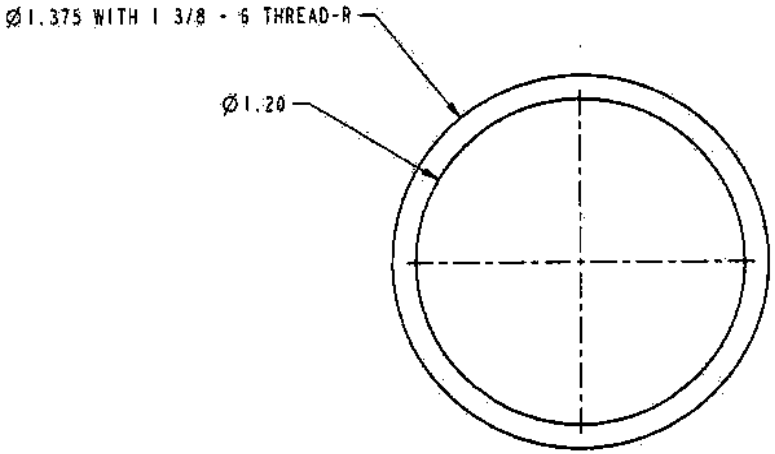

NOTES:
1. MATERIAL: ALUMINUM T6061
2. FINISH:
APPLY ANODIZING COATING
MASK AREAS AS NOTED IN THE DRAWING
PRIME COAT SHOULD CONFORM TO:
TT-P-1757 FOR ALUMINUM SURFACES

D076M2XX2044	HLS	NEXT ASSY	USED ON
APPLICATION			

UNLESS OTHERWISE NOTED
LINEAR DIMS. IN INCHES.
TOLERANCES
DECIMAL .XX+/- .XXX+/- FINISH ANGULAR +/-
DO NOT SCALE DRAWING
TREATMENT
FINISH
WEIGHT

CONTRACT NO.
DRAWN L.MONTANEZ
CHECK J.LAFFITTE
DES M.MORALES
ENGR M.MORALES
Q.A.
MFG.
DESIGN ACTIVITY M.MORALES
CUSTOMER DME

NCET Manufacturing Center for Environmental Technology

TITLE: THREADED SLEEVE

DWG SIZE	CAGE CODE	DWG NO.	REV.
C		D076M3XX3010	1

SCALE 2.000 | REL. DATE 4/28/02 | SHEET 1 OF 1

DWG NO. D076M3XX3010 SH 1 REV 1

REVISIONS			
LTR	DESCRIPTION	DATE	APPROVED

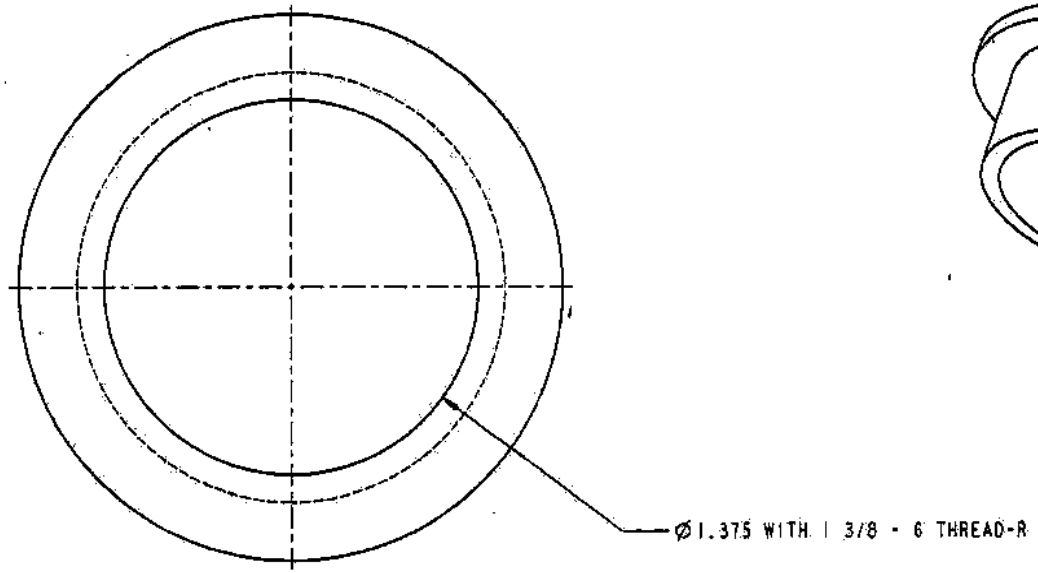

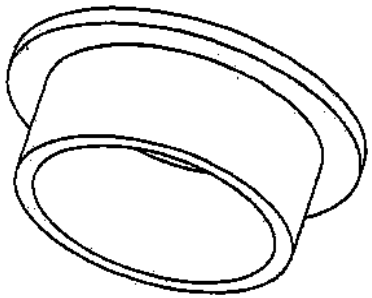

SCALE 2

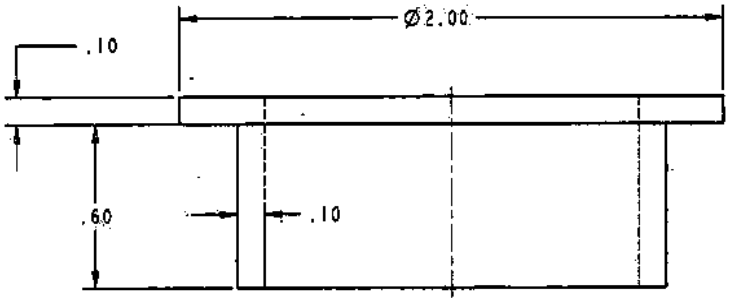

NOTES:
1. MATERIAL: ALUMINUM T6061
2. FINISH:
APPLY ANODIZING COATING PRIOR TO PAINTING
MASK AREAS AS NOTED IN THE DRAWING
USE AVIATION ORANGE PAINT NO. 12197 PER FEDERAL STD 595
APPLY PRIMER AND PAINT COATS USING SPRAY METHOD
IN ACCORDANCE WITH MIL-T-704.
PRIME COAT SHOULD CONFORM TO:
TT-P-1757 FOR ALUMINUM SURFACES
INTERMEDIATE AND FINAL COATS SHOULD CONFORM TO TT-E-489

SCALE 3

		UNLESS OTHERWISE NOTED LINEAR DIMS. IN INCHES. TOLERANCES DECIMAL .XX+/- .XXX+/- FINISH ANGULAR +/-	CONTRACT NO.	
			DRAWN L. MONTANEZ	
			CHECK J. LAFFITTE	
			DES M. MORALES	
		DO NOT SCALE DRAWING	ENGR M. MORALES	
		TREATMENT	Q.A.	
			MFG.	
D076M2XX2004	HLB	FINISH	DESIGN ACTIVITY M. MORALES	
NEXT ASSY	USED ON			
APPLICATION		WEIGHT	CUSTOMER DME	

NMSU Manufacturing Center for Environmental Technology

TITLE: THREADED FLANGE

DWG SIZE	CAGE CODE	DWG NO.	REV.
C		D076M3XX3011	1

SCALE 1.000 | REL. DATE 4/28/02 | SHEET 1 OF 1

DWG NO. D076M3XX3011 SH 1 REV 1

REVISIONS			
LTR	DESCRIPTION	DATE	APPROVED

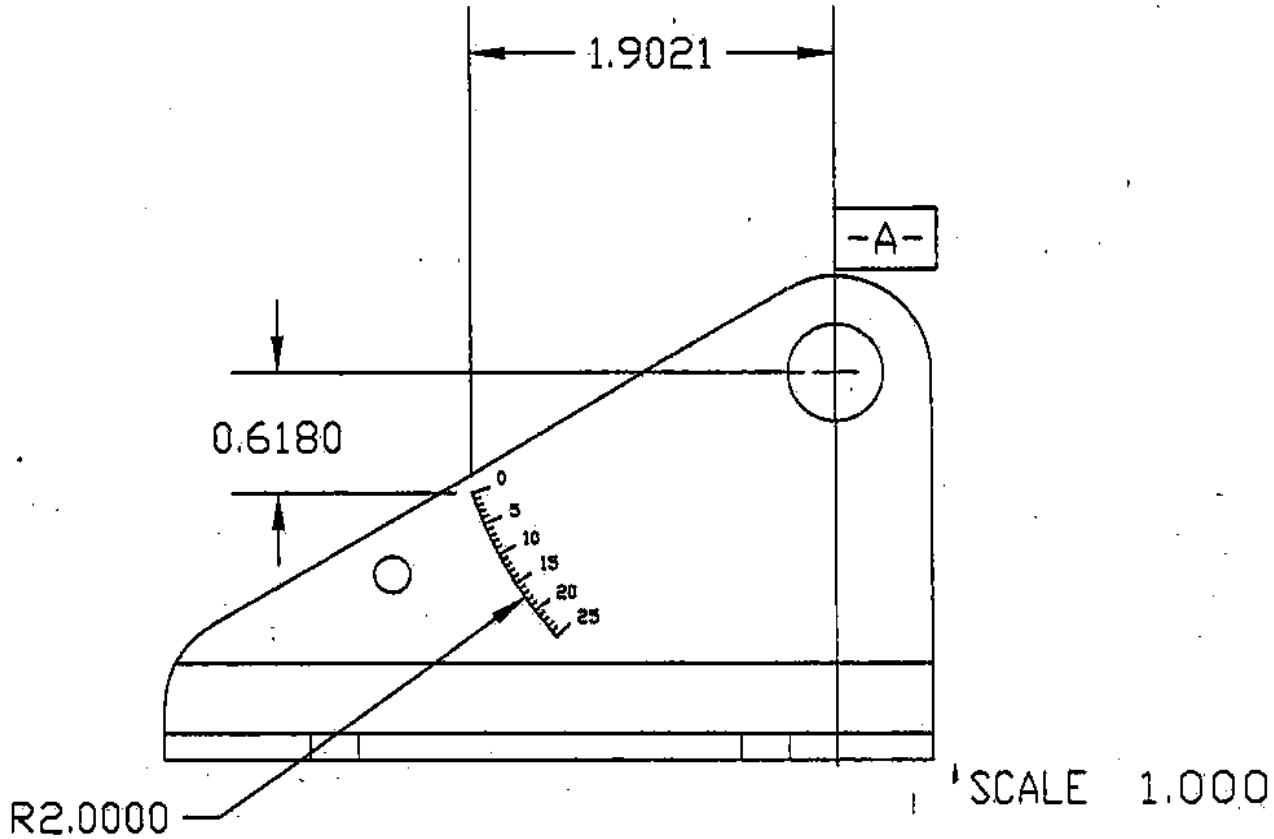

		UNLESS OTHERWISE NOTED LINEAR DIMS. IN INCHES. TOLERANCES DECIMAL .XX+/- .XXX+/- FINISH ANGULAR +/-	CONTRACT NO.
		DO NOT SCALE DRAWING	DRAWN UKONTAMEZ
		TREATMENT	CHECK JLAFFITE
			DES UKONTAMEZ
			ENGR UKONTAMEZ
			Q.A. LLAGOS
			MFG.
D076M2XX2003	HLB	FINISH	DESIGN ACTIVITY UKONTAMEZ
NEXT ASSY	USED ON		
APPLICATION		WEIGHT	CUSTOMER DME

TITLE
ANGLE MARKING DETAIL

DWG SIZE	CAGE CODE	DWG NO.	REV
C			01

SCALE 1:1 | REL.DATE 6/08/98 | SHEET 1

Appendix C
Cut Sheets

Dynaform Shapes Availability

Profile	Size (in.)	ISO	ISOFR	VEFR	Wt./Ft.
Equal Leg Angles	1 x 1/8	•	•	•	.21
	1 1/4 x 1/8				.23
	1 1/2 x 3/16	•	•		.37
	1 1/2 x 1/4	•	•	•	.51
	2 x 1/4	•	•	•	.68
	3 x 1/4	•	•	•	1.04
	3 x 3/8	•	•	•	1.65
	4 x 1/4	•	•	•	1.41
	4 x 3/8	•	•	•	2.23
	4 x 1/2	•	•	•	2.92
	6 x 3/8				3.44
	6 x 1/2	•	•	•	4.50
Channel	2 x 9/16 x 1/8	•	•		.25
	3 x 7/8 x 1/4	•			.77
	3 x 1 x 1/4	•			.87
	4 x 1 1/8 x 1/4	•	•	•	1.11
	4 x 1 3/8 x 3/16		•		.86
	6 x 1 5/8 x 1/4	•	•	•	1.64
	6 x 1 11/16 x 3/8	•		•	2.52
	8 x 2 3/16 x 3/8	•	•	•	3.40
	10 x 2 3/4 x 1/2	•	•	•	5.65
I Beam	3 x 1 1/2 x 1/4				1.11
	4 x 2 x 1/4	•	•		1.46
	6 x 3 x 1/4		•		2.24
	6 x 3 x 3/8				3.29
	8 x 4 x 3/8	•	•	•	4.46
	8 x 4 x 1/2				5.85
	10 x 5 x 3/8				5.78
	10 x 5 x 1/2				7.41
	12 x 6 x 1/2				8.97
	18 x 3/8 x 4 1/2 x 1/2				8.48
	24 x 3/8 x 7 1/2 x 3/4				16.47
Wide Flange Beam	3 x 3 x 1/4	•	•	•	1.69
	4 x 4 x 1/4	•	•	•	2.10
	6 x 6 x 1/4	•	•	•	3.41
	6 x 6 x 3/8	•	•	•	5.05
	8 x 8 x 3/8	•	•	•	6.80
	8 x 8 x 1/2				8.97
	10 x 10 x 3/8				8.78
	10 x 10 x 1/2				11.31
	12 x 12 x 1/2				13.65
Round Tube	1 x 1/8	•	•		.25
	1 1/4 x 1/8				.32
	1 1/2 x 1/8	•	•		.45
	1 1/2 x 1/4		•		.79
	1 3/4 x 1/8				.47
	1 3/4 x 1/4				.94
	2 x 1/4	•	•	•	1.12
	3 x 1/4				1.68

Profile	Size (in.)	ISO	ISOFR	VEFR	Wt./Ft.
Square Tube	1 x 1/8	•	•		.32
	1 1/4 x 1/8				.41
	1 1/4 x 1/4				.68
	1 1/2 x 1/8	•	•	•	.54
	1 1/2 x 1/4			•	.98
	1 3/4 x 1/8 *		•	•	.63
	1 3/4 x 1/4 *	•	•	•	1.10
	2 x 1/8	•	•	•	.69
	2 x 1/4	•	•	•	1.40
	2 1/8 x 3/16 *		•	•	1.14
	2 1/4 x 1/8		•	•	.88
	2 1/2 x 1/4				1.79
	3 x 1/8				1.12
	3 x 1/4	•	•	•	2.15
	4 x 1/4	•	•		2.93
Round Rod	1/4†	•			.04
	3/8†	•		•	.09
	1/2†	•		•	.17
	5/8†	•		•	.27
	3/4†	•		•	.39
	13/16				.46
	1†	•		•	.66
	1 1/4†	•			1.08
	1 1/2†	•			1.56
Square Bar	1 x 1	•			.87
	1 1/4 x 1 1/4				1.31
	1 1/2 x 1 1/2	•	•		1.98
Flat Sheet	1/8 x 48 x 96	•	•	•	1.14
	3/16 x 48 x 96	•	•	•	1.71
	1/4 x 48 x 96	•	•	•	2.34
	3/8 x 48 x 96	•	•	•	3.54
	1/2 x 48 x 96	•	•	•	4.68
	5/8 x 48 x 96				5.79
	3/4 x 48 x 96				6.94
	1 x 48 x 96				7.27
Concrete Embedment Angle	1 x 1 1/2 x 1/4			•	1.00
	1 1/2 x 1 1/2 x 1/4			•	1.10
	2 x 1 1/2 x 1/4			•	1.20
	1 x 1 1/2			•	.95
	2 x 1 1/2			•	1.00
Toe Plate	4 x 1/2 x 1/8 *		•		.49
Threaded Rods and Nuts	3/8-16 UNC			•	.09
	1/2-13 UNC			•	.14
	5/8-11 UNC			•	.23
	3/4-10 UNC			•	.33
	1-8 UNC			•	.50

ISO = Isophthalic Polyester Resin/Olive Green
ISOFR = Isophthalic Polyester Fire Retardant Resin/Light Gray
VEFR = Vinyl Ester Fire Retardant Resin/Beige
Note: Special colors are available.

• Stocked Item
* Stocked in yellow
† ISO stocked in white, VEFR in gray

Typical Coupon Properties

Below are test results for typical coupon properties of Dynaform structural fiberglass shapes and threaded rods and nuts. Properties are derived per the ASTM test method shown. Synthetic surfacing veil and ultraviolet inhibitors are standard.

Dynaform Shapes

Mechanical Properties	ASTM	Units	Value
Tensile Stress, LW	D-638	psi	30,000
Tensile Stress, CW	D-638	psi	7,000
Tensile Modulus, LW	D-638	10^6psi	2.5
Tensile Modulus, CW	D-638	10^6psi	0.8
Compressive Stress, LW	D-695	psi	30,000
Compressive Stress, CW	D-695	psi	15,000
Compressive Modulus, LW	D-695	10^6psi	2.5
Compressive Modulus, CW	D-695	10^6psi	1
Flexural Stress, LW	D-790	psi	30,000
Flexural Stress, CW	D-790	psi	10,000
Flexural Modulus, LW	D-790	10^6psi	1.8
Flexural Modulus, CW	D-790	10^6psi	0.8
Modulus of Elasticity, E	Full Section	10^6psi	2.8
Shear Modulus	———	10^6psi	0.450
Short Beam Shear	D-2344	psi	4,500
Punch Shear	D-732	psi	10,000
Notched Izod Impact, LW	D-256	ft.-lbs./in.	25
Notched Izod Impact, CW	D-256	ft.-lbs./in.	4

(1) Excludes Round Rod and Square Bar

Physical Properties	ASTM	Units	Value
Barcol Hardness	D-495	———	45
24 Hour Water Absorption	D-570	% max	0.45
Density	D-792	lbs./in.^{3}	.062-.070
Coefficient of Thermal Expansion, LW	D-696*	10^{-6}in./in./°C	8

Flammability Properties	ASTM	Units	Value
Tunnel Test*	E-84	Flame Spread	25 max
Flammability*	D-635	———	Non-burning

Electrical Properties	ASTM	Units	Value
Arc Resistance, LW	D-495	seconds	120
Dielectric Strength, LW	D-149	kv/in	35
Dielectric Strength, PF	D-149	volts/mil	200
Dielectric Constant, PF	D-150	@60hz	5

LW = Lengthwise CW = Crosswise PF = Perpendicular to Laminate Face
**Pertains to ISOFR and VEFR only*

Dynaform Threaded Rods and Nuts

Diameter - Threads Per Inch	ASTM	UNITS	3/8-16 UNC	1/2-13 UNC	5/8-11 UNC	3/4-10 UNC	1-8 UNC
Ultimate thread shear using standard fiberglass nut	—	lbs.	1,200	2,400	3,600	4,000	7,000
Ultimate transverse shear-double shear	B-565	lbs.	4,200	7,400	11,600	17,200	27,400
Max. design transverse shear-double shear	—	lbs.	2,100	3,300	4,500	7,500	13,500
Ultimate compressive strength-longitudinal	D-695	psi	47,000	50,000	50,000	50,000	65,000
Ultimate flexural Strength	D-790	psi	66,000	66,000	66,000	66,000	66,000
Flexural Modulus	D-790	10^6psi	2.0	2.0	2.0	2.5	2.75
Ultimate torque strength using fiberglass nut lubricated with SAE 10W-30 motor oil	—	ft.-lbs.	12	18	30	75	100
Dielectric strength	D-149	kv/in.	80	80	80	80	80
Water absorption, 24 hour immersion-threaded	D-570	% max	0.3	0.3	0.3	0.3	0.3
Coefficient of thermal expansion-longitudinal	—	in./in./°F	$6x10^{-6}$	$6x10^{-6}$	$6x10^{-6}$	$6x10^{-6}$	$6x10^{-6}$
Max. recommended operating temp.-based on 50% retention of ultimate thread shear strength	—	°F	212	212	212	212	212
Stud weight	—	lbs./ft.	.087	.143	.227	.333	.500
Flammability	D-635	—	*Self-extinguishing for all*				
Color	—	—	Gray	Gray	Gray	Gray	Gray

Appropriate safety factor must be applied to all ultimate values.
Dynaform Threaded Rods and Nuts are Class 1 flame retardant vinyl ester. Standard length of threaded rod is 48".

Shakespeare®
SINCE 1897

P. O. Box 733, Newberry, South Carolina 29108
Phone (800) 800-9008, Extension 321
FAX (803) 276-8940

MECHANICAL PROPERTIES COMPARISON

MATERIAL:	1X Pultrusion	Low Carbon Steel	Aluminum	Ponderosa Pine	Rigid PVC
Specific Gravity ASTM D792	2.0	7.9	2.5	0.42	1.38
Density ASTM D792	.070	0.29	.092	.016	.052
Conductivity ASTM C177	5	460	1200	0.89	1.3
Coefficient of Linear Expansion ASTM D696 (x .000001)	3	8	13	2	37
Tensile Strength ASTM D638	100,000	27,000	30,000	420	6,200
Tensile Modulus ASTM D638 (x 1,000,000)	6.0	30.0	10.0	-	.39
Flexural Strength ASTM D790	85,000	28,000	30,000	15,400	11,000
Flexural Modulus ASTM D790 (x 1,000,000)	6.0	30.0	10.6	1.2	.35

Pultruded Products

EXTREN®

FIBERGLASS STRUCTURAL SHAPES AND PLATE

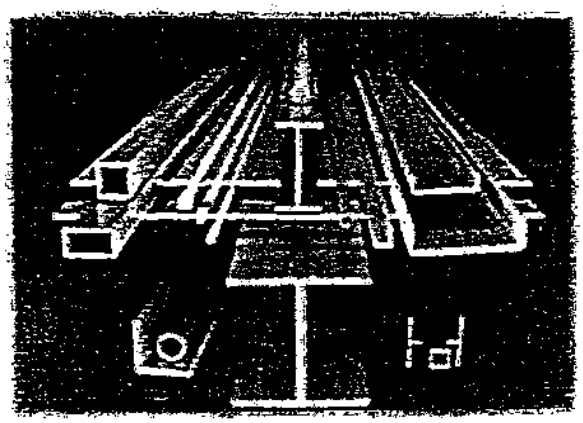

EXTREN® is a proprietary combination of fiberglass reinforcements and thermosetting polyester or vinyl ester resin systems. It is produced in more than 100 standard shapes with all shapes having a surface veil to protect against glass fibers penetrating the resin surface in service and to increase corrosion and UV resistance.

EXTREN® is offered in three series designed for different environments and applications.

SERIES 500
An all-purpose series utilizing an isophthalic polyester resin system with a UV inhibitor. Color: Olive Green

SERIES 525
An all-purpose series utilizing a fire retardant isophthalic polyester resin system with a UV inhibitor. Color: Slate Gray (plus certain handrail and fixed ladder components in yellow)

SERIES 625
A premium series both fire retardant and highly corrosion resistant utilizing a vinyl ester resin system with a UV inhibitor. Color: Beige

Go to the beginning of page

Shapes:
Length:
I.D.:
O.D.:
Thickness

Features and Benefits of EXTREN®

- Corrosion Resistant
- Non-Conductive Thermally and Electrically
- Non-Magnetic Electromagnetic Transparency
- Lightweight
- High Strength
- Dimensional Stability
- Low Maintenance

315-599-0022
Bonny Industrial
Fax: 276-645-0172
Att: Sales

Designing with EXTREN®

The EXTREN® *Design Manual*, developed by Strongwell, is the most

Action: Send fax with quote

STRONGWELL

The World's Largest Pultruder and the USA's Largest Polymer Concrete Precaster!

Terms and Conditions

The Company

- Strongwell's History
- Divisions
- Key Personnel

Pultruded Products

ISO-9001 Certified Pultrusion Facilities

- What is Pultrusion?
- Fiberglass Structural Fabrication
- EXTREN® Structural Shapes & Plate
- DURASHIELD® Foam Core Building Panels
- Custom Pultrusions
- SAFPLATE® Gritted Plate
- SAFRAIL™ Handrail & Ladder Systems
- COMPOSOLITE™ Building Panel System
- SAFPLANK® Planking System
- DURADEK® / DURAGRID® Grating
- FIBREBOLT® Fiberglass Studs and Nuts
- Fiberglass Baffle System

Special Market Products

- Offshore Oil & Gas
- Cooling Tower
- Ladder Components
- Hotel/Motel
- Driveshaft Components
- Electric Transmission Poles
- Tool Handles
- Bridge Girders & Decks

Fiberglass Grating

- DURADEK® Standard
- DURAGRID® Custom
- DURAGRATE® Molded

Precast Polymer Concrete

- What is Polymer Concrete?
- Features of Polymer Concrete

QUAZITE® Utility Products

- Boxes
- Pads
- State DOT Approved Products

POLYCAST® Drain Systems

- Residential Drain
- Industrial Drain
- High Capacity Drain

Machinery & Licensing

- PULSTAR® Pultrusion Machinery
- Licensing of Pultrusion Technology

Strongwell News!

Employment Opportunities

Literature Library

Corporate Offices / 400 Commonwealth Ave. P. O. Box 580 / Bristol, Virginia 24203-0580 USA
540-645-8000 FAX 540-645-8132
e-mail: webmaster@strongwell.com
©2000 Strongwell Corporation. All rights reserved.

Last Modified 12/21/2001 14:20:06

Time: 11:05 AM

Properties

	ASTM TEST METHOD	UNITS/ VALUE	SERIES 500/525 SHAPES	SERIES 625 SHAPES	SERIES 500/525 PLATE ⑤ 1/8" 3.175mm	3/16" - 1/4" 4.76-6.35mm	3/8" - 1" 9.5-25.4mm	SERIES 625 PLATE ⑤ 1/8" 3.175mm	3/16" - 1/4" 4.76-6.35mm	3/8" - 1" 9.5-25.4mm
MECHANICAL										
Tensile Stress, LW	D638	psi N/mm²	30,000 207	30,000 207	20,000 138	20,000 138	20,000 138	20,000 138	20,000 138	20,000 138
Tensile Stress, CW	D638	psi N/mm²	7,000 48.3	7,000 48.3	7,500 51.7	10,000 68.9	10,000 68.9	7,500 51.7	10,000 68.9	10,000 68.9
Tensile Modulus, LW	D638	10^6 psi 10^3N/mm²	2.5 17.2	2.6 17.9	1.8 12.4	1.8 12.4	1.8 12.4	1.8 12.4	1.8 12.4	1.8 12.4
Tensile Modulus, CW	D638	10^6 psi 10^3N/mm²	0.8 5.52	0.8 5.52	0.7 4.83	0.9 6.21	1.4 9.65	1.0 6.89	1.0 6.89	1.4 9.65
Compressive Stress, LW	D695	psi N/mm²	30,000 207	30,000 207	24,000 165	24,000 165	24,000 165	24,000 165	24,000 165	24,000 165
Compressive Stress, CW	D695	psi N/mm²	15,000 103	16,000 110	15,500 107	16,500 114	20,000 138	16,500 114	17,500 121	17,500 121
Compressive Modulus, LW	D695	10^6 psi 10^3N/mm²	2.5 17.2	2.6 17.9	1.8 12.4	1.8 12.4	1.8 12.4	1.8 12.4	1.8 12.4	1.8 12.4
Compressive Modulus CW	D695	10^6 psi 10^3N/mm²	1.0 6.89	1.0 6.89	1.0 6.89	1.0 6.89	1.0 6.89	1.0 6.89	1.0 6.89	1.0 6.89
Flexural Stress, LW	D790	psi N/mm²	30,000 207	30,000 207	35,000 241	35,000 241	30,000 207	35,000 241	35,000 241	30,000 207
Flexural Stress, CW	D790	psi N/mm²	10,000 68.9	10,000 68.9	13,000 89.6	15,000 103	18,000 124	13,000 89.6	15,000 103	18,000 124
Flexural Modulus, LW	D790	10^6 psi 10^3N/mm²	1.5 11.0	1.6 11.0	1.8 12.4	2 13.8	2 13.8	1.8 12.4	2 13.8	2 13.8
Flexural Modulus, CW	D790	10^6 psi 10^3N/mm²	0.8 5.52	0.8 5.52	0.9 6.21	1.1 7.58	1.4 9.65	1.0 6.89	1.1 7.58	1.4 9.65
Modulus of Elasticity ①	full section	10^6 psi 10^3N/mm²	2.6 17.9	2.8 19.3						
Modulus of Elasticity: W & I shapes > 4" W & I shapes > 102mm	full section	10^6 psi 10^3N/mm²	2.5 17.2	2.5 17.2						
Parallel Compressive Shear Stress, LW ②⑤	D3846	psi N/mm²	3,000 20.7	3,000 20.7						
Shear Modulus, LW ③	—	10^6 psi 10^3N/mm²	0.425 2.93	0.425 2.93						
Short Beam Shear, LW ④⑤	D2344	psi N/mm²	4,500 31.0	4,500 31.0			—			
Bearing Stress, LW	D953	psi N/mm²	30,000 207	30,000 207	32,000 220.6	32,000 221	32,000 221	32,000 221	32,000 221	32,000 221
Poisson's Ratio, LW ⑤	D3039	in/in mm/mm	0.33 .330	0.33 .330	0.31 .310	0.31 .310	0.31 .310	0.32 .320	0.32 .320	0.32 .320
Notched Izod Impact, LW	D256	ft-lbs/in J/mm	25 1.33	25 1.33	15 .988	10 1.07	10 1.07	15 .988	10 1.07	10 1.07
Notched Izod Impact, CW	D256	ft-lbs/in J/mm	4 .214	4 .214	5 .267	5 .267	5 .267	5 .267	5 .267	5 .267
PHYSICAL										
Barcol Hardness	D2583	—	45 ⑥	45 ⑥	40	40	40	40	40	40
24 hr Water Absorption ⑦	D570	% Max	0.6	0.6	0.6	0.6	0.6	0.6	0.6	0.6
Density	D792	lbs/in³ 10^{-3}g/mm³	.062-.070 1.72-1.94	.062-.070 1.72-1.94	.060-.068 1.66-1.88	.060-.068 1.66-1.88	.060-.068 1.66-1.88	.060-.068 1.66-1.88	.060-.068 1.66-1.88	.060-.068 1.66-1.88
Coefficient of Thermal Expansion, LW ⑤	D696	10^{-6} in/in/°F 10^{-6} in/in/°C	4.4 8.0	4.4 8.0	4.4 8.0	4.4 8.0	4.4 8.0	4.4 8.0	4.4 8.0	4.4 8.0
Thermal Conductivity ⑤	C177	BTU-in/ft²Hr°F w/(m·°K)	4 .58	4 .58						

All values are minimum ultimate properties from coupon tests except as noted.

① This value is determined from full section simple beam bending of EXTREN® structural shapes.

② The shear stress test results will change radically if the notched orientation is altered. The value in this chart represents the test configuration where the notches are machined parallel to the reinforcing mat. For notches machined perpendicular to the reinforcing mat, this value would be two to three times larger.

③ The Shear Modulus value has been determined from tests with full sections of EXTREN® structural shapes. (See Strongwell's EXTREN® *Design Manual* for further information.)

④ Value would be 50 if the surfacing veil were not there.

⑤ Plate compressive stress/modulus measured edgewise and flexural stress/modulus measured flatwise.

⑥ Values apply to Series 525 and 625.

⑦ Measured as a percentage maximum by weight.

⑧ Span to depth ratio of 3:1; EXTREN® angles will have a minimum value of 4000 psi and the I/W shapes are tested in the web.

⑨ Typical values because these are shape and composite dependent tests.

LW — Lengthwise
CW — Crosswise
PF — Perpendicular to laminate face
N.T. — Not Tested

PROPERTIES	ASTM TEST METHOD	UNITS/ VALUE	SERIES 500/525 SHAPES	SERIES 625 SHAPES	SERIES 500/525 PLATE ⑤ 1/8" 3.175mm	3/16" - 1/4" 4.76-6.35mm	3/8" - 1" 9.5-25.4mm	SERIES 625 PLATE ⑤ 1/8" 3.175mm	3/16" - 1/4" 4.76-6.35mm	3/8" - 1" 9.5-25.4mm
ELECTRICAL										
Arc Resistance, LW ⑥	D495	seconds	120	120						
Dielectric Strength, LW ⑦	D149	KV/in KV/mm	35 1.38	35 1.38	35 1.38	35 1.38	35 1.38	35 1.38	35 1.38	35 1.38
Dielectric Strength, PF ⑦	D149	volts/mil	200	200	200	N.T	N.T	250	N.T	N.T
FLAMMABILITY ⑧										
Flammability Classification (1/16")	UL 94	VO								
Tunnel Test	E-84	25 Max								
NBS Smoke Chamber	E-662	550-700 (Typical)								
Flammability	D635	Self Extinguishing								
UL Thermal Index	Generic	130°C								
British Fire Test	BS 476-7	Class 1								

ASTM SPECIFICATIONS

- ASTM D3917 "Standard Specification for Dimensional Tolerance of Thermosetting Glass-Reinforced Plastic Pultruded Shapes".
- ASTM D3918 "Standard Definition of Terms Relating to Reinforced Plastic Pultruded Products".
- ASTM D3647 "Standard Practice for Classifying Reinforced Plastic Pultruded Shapes According to Composition".
- ASTM D4385 "Standard Practice for Classifying Visual Defects in Thermosetting Reinforced Plastic Pultruded Products".

Options

Strongwell offers a broad range of fiberglass industrial products. Two other products often used with EXTREN® are SAFPLATE® and FIBREBOLT®. A brief description of each is given here. Full-color literature is available for each product.

SAFPLATE®

SAFPLATE® fiberglass gritted plate is a tough, corrosion resistant floor plate. A unique combination of pultruded fiberglass plate and anti-skid grit surface provides a textured solid sheet flooring that is ideal for both wet and dry applications. Used in a variety of applications, such as trench covers to contain vapors and fumes, or pedestrian bridge walkways for sure footing, SAFPLATE® provides a long lasting maintenance free alternative to steel plate for severe, corrosive environments.

SAFPLATE® is available as solid plate or bonded to DURADEK® or DURAGRID® grating. The grit surfaces can be fine, medium or coarse. It is available in 4' x 8' panels in all standard EXTREN® plate thicknesses: 1/8", 3/16", 1/4", 3/8", 1/2" and 3/4". The standard SAFPLATE® is fiberglass reinforced polyester with fire retardant in a gray color. Other resin systems and custom colors are available upon request.

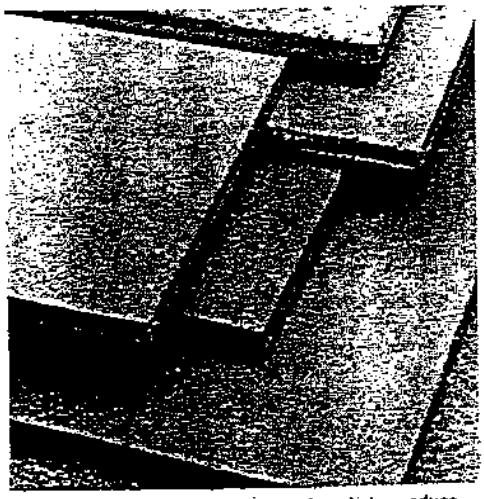

SAFPLATE®, a solid anti-skid flooring, helps reduce worker slips and falls in both wet and dry applications.

FIBREBOLT®

FIBREBOLT® fiberglass studs and nuts are ideal for applications requiring mechanical fasteners that must be non-corrosive, non-conductive and/or transparent to electromagnetic waves. FIBREBOLT® studs are machined from pultruded fiberglass vinyl ester rods. The hex shaped nut is thermoplastic. They are easily assembled with a standard six point socket wrench.

FIBREBOLT® studs and hex nuts are available in diameters of 3/8", 1/2", 5/8", 3/4" and 1" for immediate delivery. Four foot bolt lengths are standard, with custom lengths and partial length threading available on request. Brown is the standard color. The studs and nuts have UV inhibitors to provide resistance to ultraviolet degradation and corrosion.

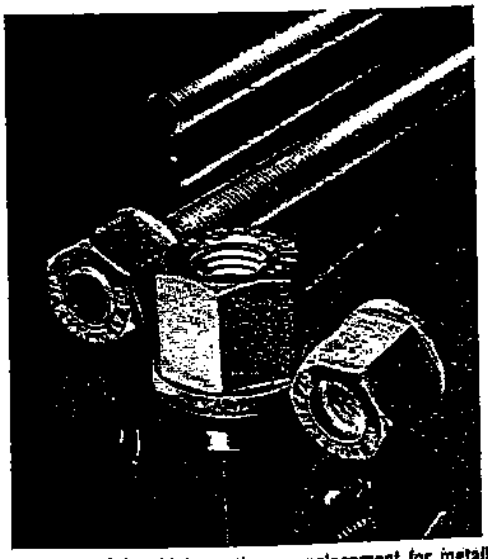

FIBREBOLT® is widely used as a replacement for metallic fasteners in structures that must be non-conductive and/or transparent to electromagnetic waves.

Availability List

STOCKED NONSTOCKED

Equal Leg Angles

1 x 1/8
1-1/4 x 3/16
1-1/2 x 3/16
1-1/2 x 1/8
1-1/2 x 1/4
2 x 3/16
2 x 1/4
3 x 1/4
3 x 3/8
4 x 1/4
4 x 3/8
4 x 1/2
6 x 1/2

1-1/4 x 1/8
2 x 1/8
5 x 1/2
6 x 1/4 *(Stock S-525)*
6 x 3/8

Unequal Leg Angles

1-3/4 x 1-1/4 x 1/4

Channels

2 x 9/16 x 1/8
3 x 7/8 x 1/4
4 x 1-3/8 x 3/16
4 x 1-1/8 x 1/4
5 x 1-3/8 x 1/4
6 x 1-5/8 x 1/4
8 x 2-3/16 x 3/8
10 x 2-3/4 x 1/2 (24' lg.)

1-1/2 x 1 x 3/16
1-1/2 x 1-1/2 x 1/4 *(Stock S-625)*
2 x 7/8 x 1/4
2-5/8 x 1/8 x 1-1/4 x 3/16
3 x 1 x 3/16
4 x 1-1/16 x 1/8
6 x 1-11/16 x 3/8 *(Stock S-500, 30', 40' & 45' lengths)*
8 x 2-3/16 x 1/4
14 x 3-1/2 x 3/4
18 x 2-3/16 x 3/16
24 x 3 x .260

I-Beams

3 x 1-1/2 x 1/4
4 x 2 x 1/4
8 x 4 x 3/8

2 x 1 x 1/8
6 x 3 x 1/4 *(Stock S-525)*
6 x 3 x 3/8
6 x 4 x 1/4
8 x 4 x 1/2
10 x 5 x 3/8
10 x 5 x 1/2
12 x 6 x 1/2 *(Stock S-525)*
18 x 3/8 x 4-1/2 x 1/2
24 x 3/8 x 7-1/2 x 3/4

Wide Flange Beams

3 x 1/4
4 x 1/4
6 x 1/4
6 x 3/8
8 x 3/8
10 x 3/8 (32' lg.)

2 x 1/8
8 x 1/2
10 x 1/2
12 x 1/2

Plate

1/8"
3/16"
1/4"
3/8"
1/2"
3/4"

5/8"
1"

Round Tube

1 x 1/8
1-1/4 x 1/8
1-1/2 x 1/8
1-1/2 x 1/4
2 x 1/8
2 x 1/4
2-1/2 x 1/4
3 x 1/4

3/4 x 3/16
1-1/4 x 3/16
1-3/8 x 3/16
1-3/4 x 1/8
1-3/4 x 1/4
2-3/4 x 1/4
2-3/4 x 3/8
3 x 1/8
3-1/2 x .140
3-1/2 x 1/2
4 x 1/8
4 x 1/4
5 x 1/8
5 x 1/4
6 x 1/8
6 x .156
6 x 1/4
8 x 3/16
10 x 3/16

FIBREBOLT® Studs and Nuts

Stocked in 4' lengths
Size: 3/8", 1/2", 5/8", 3/4", 1"

Rectangular Tube

4 x 1/8 x 2 x 1/4

2-1/2 x 1-5/8 x 1/8
3-1/4 x 2-1/2 x .160
5-1/2 x 1/4 x 2 x 1/2
7 x 4 x 1/4
9 x 6 x 5/16

Square Tube

1 x 1/8
1-1/2 x 1/8
2 x 1/8
2 x 1/4
2 x 1/4 *(Yellow; Series 525)*
3 x 1/4
4 x 1/4

1-1/4 x 1/8
1-1/2 x 1/4
1-3/4 x 1/8 **
1-3/4 x 1/4 **
2-1/2 x 1/4 *(Stock Yellow; S-525)*
3 x 1/8
3 x 3/8
4 x 3/8
6 x 3/8

Square Bar - Thermal Cure Clear

1/2"
5/8"
3/4"
1"
1-1/4"
1-1/2"

Rod - Thermal Cure Clear

1/4"
3/8"
1/2"
5/8"
3/4"
13/16"
7/8"
1"
1-1/8"
1-1/4"
1-1/2"
1-7/8"
2"

Special Pultruded Shapes*

Channel

3-1/2 x 2 x 7/32
16 x 1/4 x 3 x 1/2

Channel (Ladder Rail)

1.70 x .100 x 1.100 x .100
1.875 x .125 x 1.125 x .188
3.150 x .120 x 1.175 x .120
3.29 x .128 x 1.180 x .190
3.31 x .135 x 1.187 x .210
4.0 x .125 x 1.750 x .187

Corner Post

3-1/4 x 1/4

Curb Angle

1 x 1-1/2
1-1/2 x 1-1/2
2 x 1-1/2
(stocked at Chatfield Division)

F-Section

5-1/2 x 1 x 1/4
6 x 1-1/2 x 1/4

Flat Strips

1 x 1/4
2 x 3/16 *(Stock Yellow; S-525)*
2 x 1/4
3 x 3/16
3 x 1/2

Flight Channel

5-1/4 x 1/8 x 2-1/2 x 3/16
7-1/8 x 1/8 x 2-1/2 x 3/16

Fluted Tube

1-1/4

Foam Core Planks

4 x 2
5 x 2
6 x 2
8 x 2

Framing Angle

2 x 2 x 1/4

H-Section

3-1/2 x 1-9/16 x 1-1/2 x 1/4

Hat Section

3-1/2 x 1-7/8 x 2 x 1/8

Square Tube w/Round Hole

1" sq. with 3/4" round hole
1" sq. with 5/8" round hole
1-1/2" sq. with 1" round hole

Stair Riser

8 x 1-1/2 x 1/8

Top Rail

2 x 1/4 modified rd. tube

Z-Section

1-1/4 x 2-1/2 x 1/8

Kick Plate

4 x 1/2 x 3/16 *(Yellow; S-525)*

Slide Guide

2-1/2 x 2-1/4 x 1/4 *(White; S-500)*

Square Tube

2 x .156 *(Yellow; S-625)*

Strut

1-5/8 x 1-5/8 x 5/32 *(Gray; S-525)*

**1-3/4 x 1/8 and 1-3/4 x 1/4 Square Tubes are undersized to allow telescoping.

NOTE: Unless otherwise noted, all dimensions are in inches and stocked lengths are 10' and 20' long. All EXTREN® Series 500 products can be produced to meet NSF potable water standards in minimum mill run quantities. Only products bearing the NSF logo are certified.

Custom Pultrusions

Strongwell produces custom pultrusions in many shapes and materials for hundreds of customers. The special pultruded shapes listed on this page are only a partial listing of dies owned by Strongwell.

* Not necessarily EXTREN® specifications.

ρ = 0.062 #/in3.

STRONGWELL

ISO-9001 Certified Manufacturing Plants

BRISTOL DIVISION*
400 Commonwealth Ave., P. O. Box 580, Bristol, VA 24203-0580 USA
(276) 645-8000 Fax (276) 645-8132
*EXTREN® manufacturing location

CHATFIELD DIVISION
1610 Highway 52 South, Chatfield, MN 55923-9799 USA
(507) 867-3479 Fax (507) 867-4031

www.strongwell.com

R10M1201
©Strongwell

Specializing in Fib

Structures and

Engineering and Fabrication of Fibe

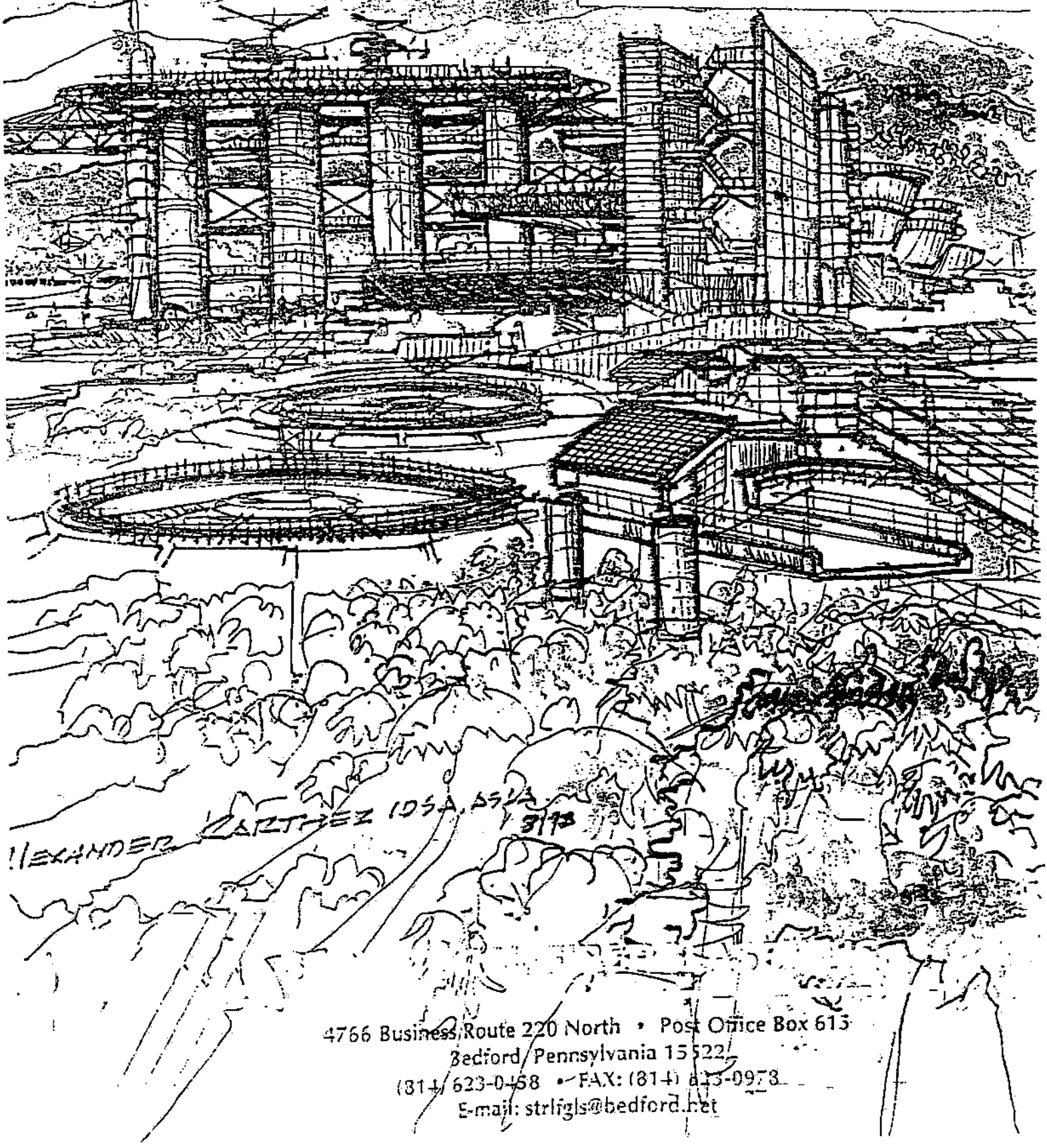

4766 Business Route 220 North • Post Office Box 615
Bedford, Pennsylvania 15522
(814) 623-0468 • FAX: (814) 623-0978
E-mail: strlfgls@bedford.net

FRP Structural Shapes

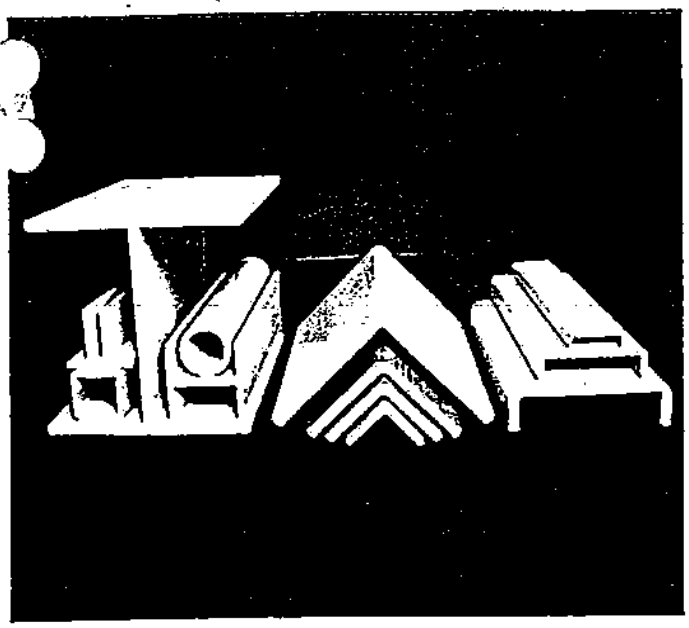

In Stock and Ready to Go

STRUCTURAL FIBERGLASS, INC. (SFI) maintains a large inventory of FRP Structural Shapes.

Fiberglass Reinforced Plastic (FRP) Pultrusions have a surface veil to protect against glass fibers penetrating the resin surface and to increase corrosion and ultraviolet resistance. FRP Pultrusions are offered in three series designed for different environments and applications.

SFI STANDARD RESIN SYSTEMS

Standard Polyester (ST) — General purpose isophthalic polyester resin, with good corrosion resistance. Stocked in olive green color.

Fire Retardant (FR) — Fire retardant isophthalic polyester resin with a Class 1 fire retardance, with an ASTM E-84 flame spread rating of 25 or less and low smoke generation. Stocked in gray or yellow.

Fire Retardant Vinylester (VE) — Fire retardant vinylester resin with a Class 1 fire retardance, with an ASTM E-84 flame spread rating of 25 or less and low smoke generation. It is highly corrosion resistant and capable of higher surface temperatures. Stocked in beige or yellow.

Custom colors are available for all shapes.

STANDARD STOCK STRUCTURAL SHAPES

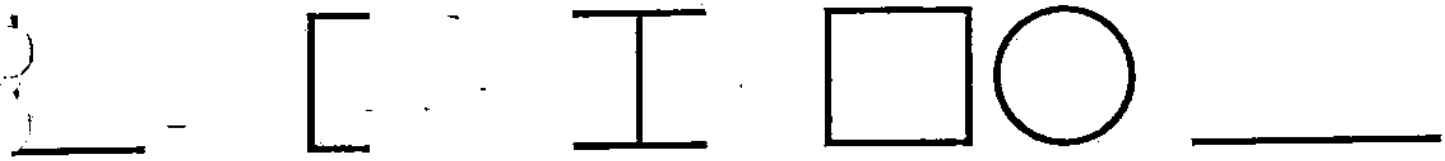

Angle	Channel	Beams	Tubes	Flat Sheet
1 × 1/8	2 × 9/16 × 1/8	IB 4 × 2 × 1/4	Round 1 × 1/8	1/8 × 48 × 96
1 1/2 × 3/16	3 × 7/8 × 1/4	IB 6 × 3 × 1/4	Round 1 1/2 × 1/8	3/16 × 48 × 96
1 1/2 × 1/4	4 × 1 1/8 × 1/4	IB 8 × 4 × 3/8	Round 2 × 1/4	1/4 × 48 × 96
2 × 1/4	6 × 1 5/8 × 1/4	WF 3 × 3 × 1/4	Square 1 × 1/8	3/8 × 48 × 96
3 × 1/4	6 × 1 11/16 × 3/8	WF 4 × 4 × 1/4	Square 1 1/2 × 1/8	1/2 × 48 × 96
3 × 3/8	8 × 2 3/16 × 3/8	WF 6 × 6 × 1/4	Square 1 3/4 × 1/4	
4 × 1/4	10 × 2 3/4 × 1/2	WF 6 × 6 × 3/8	Square 2 × 1/8	
4 × 3/8		WF 8 × 8 × 3/8	Square 2 × 1/4	
4 × 1/2			Square 3 × 1/4	
6 × 1/2			Square 4 × 1/4	

Other structural shapes are also available. Physical properties sheets, pricing and availability information can be obtained by calling the SFI office or Representative.

Local Representative:

Front cover illustration by:
Alexander Karther IDSD, ASLA
Industrial Designer and
Associate Professor of Landscape Architecture
West Virginia University

STRUCTURAL FIBERGLASS, INC.

(814) 623-0458 • FAX: (814) 623-0978

STRUCTURAL FIBERGLASS, INC.

4768 BUSINESS ROUTE 220 NORTH, POST OFFICE BOX 615
BEDFORD, PENNSYLVANIA 15522
(814) 623-0458 FAX (814) 623-0978
E-MAIL: strfgls@bedford.net WEBSITE: WWW.STRUCTURALFIBERGLASS.COM

DATE: 4-29-02

TO: Company: Florida University

Fax Number: 305-348-6308

Attention: Lymari Montanez

FROM: Vicky P

REFERENCE: Price Quote

Number of pages being transmitted – (including this one): 1

Message: Square Tube 1625 3" x 3" x 1/8"
is available in mill run quantity only.
Mill run would be 1,000 lft.
Your cost would be $4.95 LF.
1625 material is ran in a light beige
color.
Should require color match, we would
have to quote on that. However, if customer
needs ran in orange, we can get
quote on this for you.

the only piece around is a 10' piece of Standard Polyester Green, which we can sell you for a prototype. However it is not 1625 material. $49.00

****check out our website @ WWW.STRUCTURALFIBERGLASS.COM****

Chapter 3 Physical and Mechanical Properties

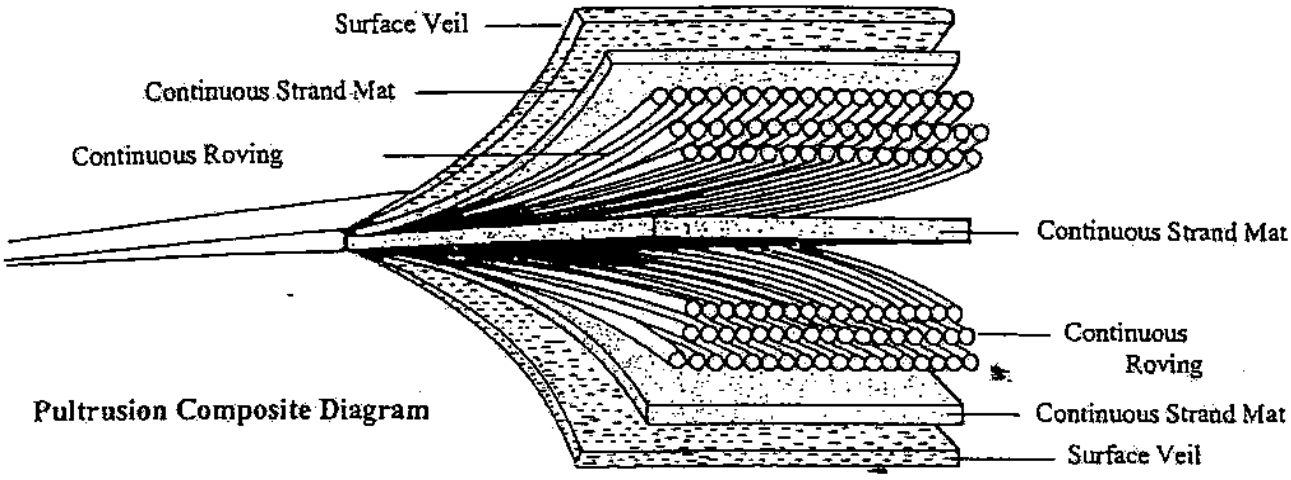

Pultrusion Composite Diagram

Introduction To Design With Pultruded Composites

A pultrusion is a composite of several materials and reinforcements. It presents the opportunity to design product components with properties to meet specific needs. Fiber reinforcements and loadings can be varied to produce a wide range of structural properties in the end product.

Typical structural items contain 45% to 75% glass by weight. This composite type is widely used in the pultrusion industry for determining the standard mechanical properties of pultrusion, and can be modified, if necessary, for special applications. Tensile strengths, for example, can vary from 40 MPa to 1000 MPa, depending on the glass loading, fiber orientation and resin selection.

Fiber Properties

A variety of continuous and woven reinforcement types is also available to the designer. The four major types are E-GLASS, S-GLASS, ARAMID and CARBON. The primary type used is E-glass. Other reinforcements are more costly; and, therefore, used more sparingly in construction.

Table 3-1 Typical Properties of Fibers Used in Pultruded Structural Profiles

Properties are displayed below for virgin fibers, as manufactured.

Property	E-Glass	S-Glass	Aramid	Carbon
Density lbs/in^3	.094	.090	.053	.064
Tensile Strength (psi)	500,000	665,000	400,000	275,000-450,000
Tensile Modulus (10^6 psi)	10.5	12.6	9.0	33-55
Elongation to break (%)	4.8	5.4	2.3	0.6-1.2

Fiber reinforcements are available in a variety of single-strand woven, braided, stitched, and knitted goods, thus adding to the range of properties of the end composite.

Resin Properties

Determination of resin is controlled by factors such as corrosive environments, temperature exposure, and flame retardancy.

Polyesters are the primary resins used in pultrusion. A wide range of polyesters is available with distinct characteristics. The capabilities and needs for these various resins can only be determined by end-use applications. For the selection of a particular polyester, the designer should consult Creative Pultrusions.

Fire-retardant polyesters are also available. Fire retardancy can be altered with the proper blending of different resins. Some of the obtainable results on flammability specifications and tests are presented further in the Material Properties. For superior fire retardancy, phenolic or other specialty resins may be used.

Vinyl ester resins are also commonly used in the pultrusion process. They are used to improve the chemical resistance of the laminate. Because of their chemistry with glass reinforcements, physical properties of the laminate can be expected to increase up to 15%.

Epoxy resins are typically used with carbon fiber reinforcements in applications in which high stiffness and strength requirements are critical. They can also be used with E-glass to improve the physical properties.

Table 3-2 Typical Properties of Resins Used in Pultruded Structural Profiles

Property	Polyester	Vinyl ester	Epoxy	Test Method
Tensile Strength (psi)	11,200	11,800	11,000	ASTM D638
% Elongation	4.5	5	6.3	ASTM D638
Flexural Strength (psi)	17,800	20,000	16,700	ASTM D790
Flexural Modulus (10^6 psi)	0.43	0.54	0.47	ASTM D790
Heat Distortion Temperature (°F)	160	220	330	ASTM D648
Short Beam Shear (psi)	4,500	5,500	8,000	ASTM D2344

Fillers

Various fillers are also used in the pultrusion process. Aluminum silicate (kaolin clay) is used for improved chemical resistance, opacity, good surface finish and improved insulation properties. Calcium carbonate offers improved surfaces, whiteness, opacity and general lowering of costs. Alumina trihydrate and antimony trioxide are used for fire retardancy. Alumina trihydrate can also be used in conjunction with clays for improved insulation properties.

MATERIAL PROPERTIES

Pultex® Fiber Reinforced Polymer Structural Profiles
Rectangular Tubes, Channels, Angles, Square Tubes, Round Tubes

Angle profile sizes are 3" x 3" x 1/4" and less.

1500 Series - Thermoset Polyester – Olive Green
1525 Series - Thermoset Polyester Class 1 FR – Gray
1625 Series - Thermoset Vinyl Ester Class 1 FR – Beige

The following data was derived from ASTM coupon and full section testing. The results are average values based on random sampling and testing of production lots. Composite materials are not homogeneous; and therefore, the location of the coupon extraction can cause variances in the coupon test results. Creative Pultrusions publishes an average value of random samples from production lots.

Beige

Property (coupon values)	ASTM Test	Units	1500/1525 Series	1625 Series
Mechanical				
Tensile Strength (LW)	D638	psi	33,000	37,500
Tensile Strength (CW)	D638	psi	7,500	8,000
Tensile Modulus (LW)	D638	10^6 psi	2.5	3.0
Tensile Modulus (CW)	D638	10^6 psi	0.8	1.0
Compressive Strength (LW)	D695	psi	33,000	37,500
Compressive Strength (CW)	D695	psi	16,500	20,000
Compressive Modulus (LW)	D695	10^6 psi	3.0	3.0
Compressive Modulus (CW)	D695	10^6 psi	1.0	1.2
Flexural Strength (LW)	D790	psi	33,000	37,500
Flexural Strength (CW)	D790	psi	11,000	12,500
Flexural Modulus (LW)	D790	10^6 psi	1.6	2.0
Flexural Modulus (CW)	D790	10^6 psi	0.8	1.0
Modulus of Elasticity	Full Section[2]	10^6 psi	2.8-3.2	2.8-3.2
(Channels)	Full Section[2]	10^6 psi	2.8	2.8
(Square and Rectangular Tubes)	Full Section[2]	10^6 psi	3.2	3.2
Shear Modulus	Full Section[2]	10^6 psi	0.42	0.42
Interlaminar Shear (LW)[3]	D2344	psi	4,500	4,500
Shear Strength By Punch (PF)	D732	psi	5,500	6,000
Notched Izod Impact (LW)	D256	ft-lbs/in	28	30
Notched Izod Impact (CW)	D256	ft-lbs/in	4	5
Bearing Strength (LW)	D953	psi	30,000	30,000
Bearing Strength (CW)	D953	psi	18,000	18,000
Poisson's Ratio (LW)	D3039	in/in	0.35	0.35
Poisson's Ratio (CW)	D3039	in/in	0.15	0.15
In-plane Shear (LW)	Modified D2344[4]	psi	7,000	7,000
In-plane Shear (CW)[5]	Modified D2344[4]	psi	4,500	4,500

LW = lengthwise CW = crosswise PF = perpendicular to laminate face

Note: Creative Pultrusions, Inc. manufactures Pultex® Standard Structural and **SuperStructural** profiles that meet the requirements of both the E17 and E23 grades of the new Euronorm, EN 13 706.

Additional properties located on page 4

MATERIAL PROPERTIES

Pultex® Fiber Reinforced Polymer Structural Profiles

Rectangular Tubes, Channels, Angles, Square Tubes, Round Tubes

Angle profile sizes are 3" x 3" x 1/4" and less.

(cont'd)

Property (coupon values)	ASTM Test	Units	1500/1525 Series	1625 Series
Physical				
Barcol Hardness[1]	D2583		45	45
Water Absorption	D570	% Max	0.6	0.6
Density	D792	lbs/in^3	0.060-0.070	0.060-0.070
Specific Gravity	D792		1.66-1.93	1.66-1.93
Coefficient of Thermal Expansion (LW)	D696	10^{-6}in/in/°F	4.4	4.4
Thermal Conductivity (PF)	C177	BTU-in/ft^2/hr/°F	4	4
Electrical				
Arc Resistance (LW)	D495	seconds	120	120
Dielectric Strength (LW)	D149	KV/in	40	40
Dielectric Strength (PF)	D149	volts/mil	200	200
Dielectric Constant (PF)	D150	@60Hz	5.2	5.2

[1] Pultex® uses a synthetic surface veil that reduces the Barcol Hardness, but does not reflect lack of cure.
[2] Full section testing based on a 3-point bend with simply supported end conditions (Reference The *New and Improved* Pultex® Pultrusion Global Design Manual, Appendix B, for details).
[3] Tested on a 3:1, span to depth ratio.
[4] Follow ASTM D2344, but rotate coupon 90° (cut section of coupon length faces up).
[5] In-plane Shear (CW) values for square tubes and rectangular tubes = 2,500 psi; angles = 3,800 psi

Property	ASTM Test	Value 1525	Value 1625
Flammability Classification	UL94	(VO)	(VO)
Tunnel Test	ASTM E-84	25 Max	25 Max
Flammability Extinguishing	ASTM D635	Self extinguishing	Self extinguishing
NBS Smoke Chamber	ASTM E662	650	650
Flame Resistance (Ignition/Burn)	FTMS 406-2023	55/30 (seconds)	55/30 (seconds)

Creative Pultrusions, Inc. believes the information put forth in this property sheet to be as accurate and reliable as of the date of publication. However, we assume no obligation or liability, which may arise as a result of its use. While Creative Pultrusions, Inc. has no knowledge that the information put forth infringes any valid patent, it assumes no responsibility with respect thereto and each user must satisfy oneself that one's intended application process or product infringes no patent.

Chapter 6 Environmental Considerations

Pultrusions are used in many varied applications. Through experience and laboratory testing, Pultex® Profiles have been evaluated in a variety of environments. The resulting guidelines should be considered if the pultrusion is to be exposed to environmental attack.

Temperature

Pultrusion experiences some property loss from continuous exposure to high temperatures. It is, therefore, recommended that property loss be taken into consideration during design using the following guidelines for Pultex® 1500/1525 Series and 1625 Series.

Table 6-1 Property Retention at Varying Temperatures

	Temperature	Pultex® 1500/1525 Series	Pultex® 1625 Series
Ultimate Stress			
	100° F	85%	90%
	125° F	70%	80%
	150° F	50%	80%
	175° F	Not Recommended	75%
	200° F	Not Recommended	50%
Modulus of Elasticity			
	100° F (37° C)	100%	100%
	125° F (51° C)	90%	95%
	150° F (65° C)	85%	90%
	175° F (79° C)	Not Recommended	88%
	200° F (93° C)	Not Recommended	85%

In applications requiring greater strength retention, it is possible to select a higher performance resin system specifically designed for elevated temperatures. An example is Pultex® 1625 Series Vinyl Ester, which has better strength retention of properties at elevated temperatures. Creative Pultrusions can design additional resin systems to achieve higher temperature ratings. Contact Creative Pultrusions early in the design stages so that confirmation testing can be performed for various temperatures and environments to verify suitability.

Weathering

Most plastic materials undergo some decay and change in appearance during prolonged exposure to outdoor weathering. In order to minimize this effect with pultruded profiles, various options are available.

UV Stabilizers

Pultex® 1500/1525 Series and 1600/1625 Series contain a UV inhibitor for protection against sunlight. It will retard the effect of outdoor weathering, but eventually the profile surface will degrade. A condition, "fiber blooming", will occur on the surface of the profile with subsequent slight deterioration in physical properties.

WORM DRIVE & BAND TYPE HOSE CLAMPS

Lined Stainless Steel Hose Clamps

Excellent for use with silicone rubber and other soft hose applications
Extended band (acts as liner) protects the hose surface and prevents it from extruding or shearing through the band notch as clamp is tightened
Excellent for marine and other demanding applications
One piece stainless steel housing design

Series	Band ½" Width	Housing Material	5/16" Hex Head
Series 67M	316 SS	316 SS	316 SS

SAE Size	Size Range (In.) Min.	Max.	Pkg. Qty.	Order #	Price Ea.
08	½	1	200	49709009	$1.19
10	11/16	1⅛	500	49709033	1.25
12	11/16	1¼	500	49709066	1.24
16	¾	1½	500	49709090	1.24
20	13/16	1¾	500	49709124	1.29
24	1 1/16	2	500	49709157	1.26
28	1¼	2¼	500	49709181	1.27
32	1 5/16	2½	500	49709215	1.30
36	1 13/16	2¾	500	49709249	1.34
40	2 1/16	3	200	49709272	1.42

SAE Size	Size Range (In.) Min.	Max.	Pkg. Qty.	Order #	Price Ea.
44	2 5/16	3¼	200	49709306	$1.69
48	2 9/16	3½	200	49709330	1.69
52	2 13/16	3¼	100	49709363	1.80
56	3 1/16	4	100	49709397	1.76
60	3 5/16	4¼	100	49709421	2.02
64	3 9/16	4½	100	49709454	1.97
72	4 1/16	5	100	49709488	2.04
88	5 1/16	6	100	49709512	2.09
96	5 9/16	6½	100	49709546	2.17

Lox-On™ Hose Clamps

- For extremely demanding installations; corrosion and chemical resistant
- Unique design provides double locking security and high band tension for high sealing pressures
- Patented offset buckle provides full circle seal. Conforms to the contour of the clamped material

Series	Band ½" Width	Housing Material	5/16" Hex Head
Series 69	301 SS	301 SS	305 SS

SAE Size	Min. Size Range (In.)	Max. Size Range (In.)	Pkg. Qty.	Order #	Price Ea.
12	11/16	1¼	500	49708001	$1.62
20	1 11/16	1¾	500	49708035	1.65
32	1 11/16	2¾	500	49708068	1.65
72	1¾	5	50	49708092	2.48
104	4	7¼	50	49708126	2.78

Wraplock™ Series Hose Clamps

- Adjustable Strap type clamp made with unique one piece design
- Large diameter ranges allow reduction in inventory
- Conforms to any shape and size

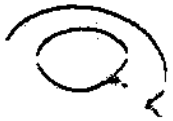

Series	Band ½" Width	Housing Material	5/16" Hex Head
Series 59	Galvanized Steel	Galvanized Steel	Carbon Steel

SAE Size	Min. Size Range (In.)	Max. Size Range (In.)	Pkg. Qty.	Order #	Price Ea.
48	1	3½	100	49710007	$0.71
64	1	4½	100	49710031	0.88
72	1	5	300	49710064	0.94
104	1	7	275	49710098	1.05
136	1	9	300	49710122	1.22
224	1	14½	250	49710155	1.61

T-Bolt Band Clamps

A strong method of assembling hose, duct connections, tubing, and component parts. Used for high torque applications where ordinary hose clamps fail. Provide a 360° sealing surface by using a shoe or formed bridge. Clamp has a ¾" wide - .025" thick, 300 series stainless steel band. Carbon steel bolt and nut.

Nominal Size (In.)	I.D. Min. (In.)	Max. (In.)	Order #	Price Ea.
1½	1.31	1.56	48499008	$4.85
1⅞	1.56	1.81	48499032	4.93
1¾	1.68	1.94	48499065	5.10
2	1.81	2.06	48499099	5.26
2¼	2.06	2.31	48499123	4.66
2½	2.31	2.62	48499156	4.76
2¾	2.56	2.87	48499214	5.00
3¼	3.06	3.37	48499271	5.08
3½	3.31	3.62	48499305	5.00
3¾	3.63	3.94	48499339	5.19
4	3.81	4.12	48499362	5.19
4¼	4.06	4.37	48499396	5.25
4½	4.31	4.62	48499420	5.26
4¾	4.56	4.87	48499453	5.30

Nominal Size (In.)	I.D. Min. (In.)	Max. (In.)	Order #	Price Ea.
5	4.81	5.12	48499487	$5.34
5¼	5.06	5.37	48499511	5.34
5½	5.31	5.62	48499545	5.34
5¾	5.56	5.87	48499578	5.48
6	5.81	6.12	48499602	5.44
6¼	6.06	6.37	48499636	5.49
6½	6.31	6.62	48499669	6.50
6¾	6.56	6.87	48499693	5.55
7	6.81	7.12	48499727	5.59
7¼	7.06	7.37	48499750	6.50
7½	7.31	7.62	48499784	6.65
7¾	7.56	7.87	48499818	6.65
8	7.81	8.12	48499842	5.63
8¼	8.06	8.37	48499875	6.50

Surelok™ Quick Release Hose Clamps

- Ideal for quick clamp installations
- Corrosion and chemical resistant
- Blind free pull through design makes installation quick and easy
- Captured screw design makes engagement and final tensioning trouble free
- Rugged 3/16" band width provides extra clamping surface
- Can never accidentally release open once installed properly

SAE Size	Size Range (In.) Min.	Max.	Pkg. Qty.	Order #	Price Ea.
80	2 7/16	5½	250	49708506	$2.53
128	4¼	8½	100	49708530	2.64
180	7¼	11¾	100	49708563	3.13
190	6⅜	12¾	100	49708597	3.13
218	11¼	14⅛	100	49708621	3.53
242	12¾	15⅝	100	49708654	3.92
258	13¾	16⅝	100	49708688	4.00
282	15¼	18⅛	100	49708712	4.09
306	14 1/16	19⅝	100	49708746	4.17
318	17½	20⅝	100	49708779	4.55
348	19⅝	22¼	100	49708803	4.60

Series	Band 3/16" Width	Housing Material	Screw 5/16" Hex Head
Series 48	304 SS	304 SS	304 SS

Nylon Double Bond Hose Clamps

made in USA

Durable, non-corrosive material and patented double row of teeth design provides for a strong bond which will not loosen with vibration. Easy-to-install without removing hose. Reusable design can handle most moderate non-hydraulic pressure applications. For temperature ranges -40°F to 302°F. Made of UL Listed nylon material.

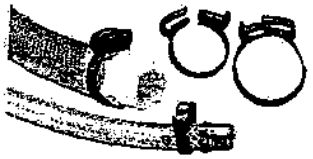

Clamp Dia. Nominal (In.)	Min. (In.)	Max. (In.)	Std. Pkg.	Order #	Price Per Pkg. of 10
¼	0.220	0.276	10	09862004	$3.46
⅜	0.319	0.382	10	09862012	3.46
7/16	0.413	0.500	10	09862020	3.68
½	0.480	0.583	10	09862038	3.87
9/16	0.524	0.646	10	09862046	4.83
⅝	0.594	0.717	10	09862053	4.70
¾	0.732	0.870	10	09862061	4.70
1	0.976	1.130	10	09862079	5.70
1¼	1.150	1.319	10	09862087	6.46
1¾	1.744	1.913	10	09862103	9.15
2	1.965	2.146	10	09862111	10.76

NOTE: When ordering, request a quantity of 1 and you will receive one package of 10. Sold in package quantities only.

Band Style Pipe and Tube Clamps

made in USA

Universal band style clamps used for pipe mountings, mounting brackets, automotive and heavy duty truck and off-road exhaust applications.

- Includes a ⅜-16 x 3.0" (Grade 5) Zinc Plated carriage bolt with serrated flange style locking nut
- Material Thickness A= .120" Band Width, B = 1.00"
- Manufactured from long lasting hot rolled steel
- Zinc Plated clamps resist rust
- All hardware installed on clamp

Fits Pipe Size	Plain Order #	Price Ea.	Zinc Coated Order #	Price Ea.
2.000	08005761	$6.23	08005936	$6.78
2.125	08005779	6.25	08005944	6.80
2.250	08005787	6.26	08005951	6.81
2.500	08005795	6.28	08005969	6.83
2.750	08005803	6.29	08005977	6.84
3.000	08005811	6.31	08005985	6.86
3.250	08005829	6.34	08005993	6.89
3.500	08005837	6.37	08006009	6.92
3.875	08005845	6.39	08006017	6.96
4.000	08005852	6.44	08006025	7.17
4.250	08005860	6.45	08006033	7.18
4.500	08005878	6.47	08006041	7.20
5.000	08005886	6.55	08006058	7.29
5.500	08005894	6.63	08006066	7.37
6.000	08005902	6.72	08006074	7.45
7.000	08005910	6.85	08006082	7.76
8.000	08005928	7.03	08006090	7.95

2" pole

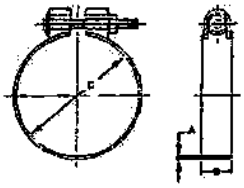

6" pole

8 Pc. Ergonomic Screwdriver Set

INDUSTRIAL QUALITY IMPORT

- 5/16 x 6", 1/4 x 4", 3/16 x 4", and 1/4 x 1½" Slotted
- 0 x 3", 1 x 3", 2 x 4", 2 x 1½" Phillips®
- Black and red ergonomic handles
- Non-slip grip
- Plastic case

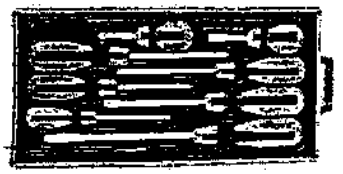

Wt. (Lbs.)	Order #	Price Per Set
2.5	8E01906080	$24.35

We would love to hear your comments.

Hex Nuts > Nut Type > Size (Inch) > Material > Thread

Hex Nuts

1 item matches all of your specifications.

Part Number 94895A031

$5.41 per Pack of 100

Nut Type:	Standard	
Material:	Grade 8 Zinc-Plated Steel	Select to change value
Thread:	Right Hand Thread	Select to change value
Size (Inch):	3/8"-16	Select to change value
Width (Inch):	9/16"	
Height (Inch):	21/64"	

To Order this item, enter a quantity and click on the "Add to Order" button.

View this item on its catalog page.

To change any other features, please start your search again.

We would love to hear your comments.

Lock Washers > Type > Inch Size > Inside Diameter (Inch) > Material

Lock Washers

This item matches all of your specifications.

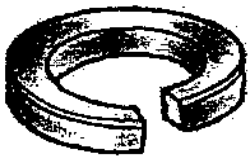

Part Number 91104A031

$5.54 per Pack of 100

Type:	Spring
Style:	high strength spring
Material:	Zinc-Plated Alloy Steel
Inch Size:	3/8"
Inside Diameter (Inch):	.385"
Outside Diameter (Inch):	.680"
Thickness (Inch):	.094"

To Order this item, enter a quantity and click on the "Add to Order" button.

View this item on its catalog page.

To change any other features, please start your search again.

Item matches all of your specifications.

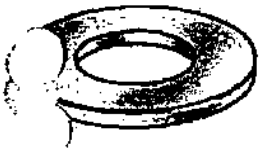

Part Number 98023A031

$3.37 per Pack of 50

Type:	Round
Specification:	SAE
Material:	Zinc-Plated Steel
Screw Size (Inch):	3/8"
Inside Diameter (Inch):	13/32"
Outside Diameter (Inch):	13/16"
Thickness (Inch):	.055"

Select to change value

To Order this item, enter a quantity and click on the "Add to Order" button.

View this item on its catalog page.

To change any other features, please start your search again.

We would love to hear your comments.

Type > Screw Size (Inch) > Inside Diameter (Inch) > Thickness (Inch)

Flat Washers

item matches all of your specifications.

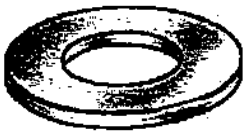

Part Number 91083A040

$2.32 per Pack of 1

Type:	Round
Specification:	SAE
Material:	Plain Steel
Screw Size (Inch):	1-3/8"
Inside Diameter (Inch):	1-3/8"
Outside Diameter (Inch):	2-1/2"
Thickness (Inch):	5/32"

To Order this item, enter a quantity and click on the "Add to Order" button.

View this item on its catalog page.

To change any other features, please start your search again.

Lap Holding Washer → 5 washers

Carlon®

NM Female Adapter
Rigid PVC Schedule 40

Adapts NM conduit to threaded fittings and metallic systems. Female threads/socket. UL listed.

Size In.	Mfr. No.	SKU	Price Each
1/2	5140043C	202916	$0.19
3/4	5140045C	159913	0.49
1 1/4	5140046C	159921	0.53
1 1/2	5140047C	722456	0.57
2	5140048C	160172	0.77

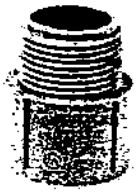

NM Terminal Adapter
Rigid PVC Schedule 40

Adapts NM conduit to boxes and threaded fittings. Male threads/socket. UL listed.

Size In.	Mfr. No.	SKU	Price Each
1/2	5140103C	202894	$0.22
1/2	E943DR	668454	
3/4	5140104C	202908	0.26
1	5140105C	160180	0.41
1 1/4	5140106C	160199	0.51
1 1/2	5140107C	722480	0.51
2	5140108C	160229	0.75

NM Standard Coupling
Rigid PVC Schedule 40

Socket type for joining nonmetallic conduit. UL listed.

Size In.	Qty.	Mfr. No.	SKU	Price Each
1/2	1	6141623C	202878	$0.15
1/2	50	E940DR	668566	
3/4	1	6141624C	202886	0.19
3/4	50	E940ER	668597	
1	1	6141625C	159492	0.39
1 1/4	1	6141626C	159883	0.32
1 1/2	1	6141627C	722413	0.51
2	1	6141628C	159905	0.68

RACO

NM Snap-In ENT Conduit Coupling
UL listed.

Size In.	Qty.	Mfr. No.	SKU	Price Each
1/2	5	7022-8	396346	$
3/4	5	7023-8	396354	

Carlon®

NM Reducer Bushing
Rigid PVC Schedule 40

Socket ends. UL listed.

Size In.	Mfr. No.	SKU	Price Each
3/4 x 1/2	5142220U	533890	$0.49
1 x 1/2	E950FD-CAR	533912	
1 x 3/4	5142221U	533947	0.97
1 1/4 x 1	5142222U	534013	1.17
1 1/2 x 1 1/4	5142223U	732001	1.39

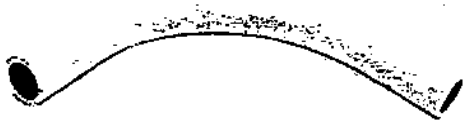

PVC 90° Standard Radius Elbow
Schedule 40 Conduit

UL listed.

Size In.	Mfr. No.	SKU	Price Each
1 1/4	UA9AG-CAR	161322	$

Carlon®

PVC 90° Standard Radius Elbow with Bell End

Schedule 40 Conduit

UL listed.

Size In.	Mfr. No.	SKU	Price Each
1/2	5233823U	703266	$0.51
3/4	5233824U	703459	0.67
1 1/4	5233826U	117589	0.99
1 1/2	5233827U	703574	1.95

PVC 45° Standard Radius Elbow with Bell End

Schedule 40 Conduit

UL listed.

Size In.	Mfr. No.	SKU	Price Each
3/4	5233764U	703056	$0.65
1 1/4	UA7AG8-CAR	260178	[illegible]
1 1/2	UA7AH8-CAR	703705	[illegible]

PVC Access Pull Elbow

Schedule 40/80 Conduit

UL listed.

Size In.	Mfr. No.	SKU	Price Each
1/2	5240100C	202649	$1.69
3/4	5240101C	202637	1.75

Carlon®

PVC Type T Conduit Body

Schedule 40/80 Conduit

UL listed.

Size In.	Volume Cu In.	Mfr. No.	SKU	Price Each
1/2	4	5133563U	202606	$1.46
3/4	12	5133564U	202614	1.71
1	12	5133565U	215562	1.87
1 1/4	32	5133566U	533874	5.37

PVC Type LB Conduit Body

Schedule 40/80 Conduit

UL listed.

Size In.	Volume Cu In.	Mfr. No.	SKU	Price Each
1/2	4	5133663U	450634	$1.17
3/4	12	5133664U	450642	1.37
1	12	5133665U	161012	1.45
1 1/4	32	5133666U	161128	2.92
1 1/2	32	5133667U	722553	4.09
2	63	5133668U	161209	4.85

NM Type X Round Conduit Body

Schedule 40/80 Conduit

Includes screws, gasket, cover, and mounting feet. Not designed for use with wiring devices or light fixtures. UL listed.

Hub Size In.	Volume Cu. In.	Mfr. No.	SKU	Price Each
(4) 1/2	15.16	5133690U	499917	$4.88

Proud Sponsor of the 2002 U.S. Olympic Team

iltight Hole Seals

WIEGMANN

d against dirt, dust, oil and water. Comes standard with a quick wing nut gasket. Steel holes have ANSI 61 powder coat finish.

	Conduit Size (in.)	Interchange Guide Hoffmann	Electro Mate	Mfr's #	Order #	Price Ea.
	½	AS050	ES050	WAS050	54079603	$2.90
St	¾	AS075	ES075	WAS075	54079611	3.77
Ste.	1	AS100	ES100	WAS100	54079629	5.21
Steel	1¼	AS125	ES125	WAS125	54079637	5.83
Steel	1½	AS150	ES150	WAS150	54079645	6.63
Steel	2	AS200	ES200	WAS200	54079652	7.36
Steel	2½	AS250	ES250	WAS250	54079660	15.38
Steel	3	AS300	ES300	WAS300	54079678	20.26
Steel	3½	AS350	ES350	WAS350	54079686	26.37
Steel	4	AS400	ES400	WAS400	54079694	33.83
less Steel	½	AS050SS	ES050SS	WAS050SS	54079751	8.61
less Steel	¾	AS075SS	ES075SS	WAS075SS	54079769	10.99
less Steel	1	AS100SS	ES100SS	WAS100SS	54079777	14.74
less Steel	1¼	AS125SS	ES125SS	WAS125SS	54079785	16.95
less Steel	1½	AS150SS	ES150SS	WAS150SS	54079793	19.01
ess Steel	2	AS200SS	ES200SS	WAS200SS	54079801	21.09

erglass Hinged Box

WIEGMANN

irt, dust, oil and water with indoor/outdoor fiberglass-reinforced er enclosure. Has stainless steel continuous hinge, wall- ng hardware, latches and padlock hasp. UV stabilized and easily d, drilled or sawed. Well-suited to high-temperature and ve environments. Threaded integral bushing for panel or l kit. White steel inner panels are optional.
isures are halogen free and self-extinguishing

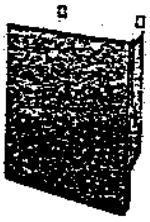

s NEMA/EEMAC Type 4, 4X and 12 specifications
certified LR21001 for use with industrial controls equipment.
8 listed. Type 1, 2, 3, 4, 4X, 12 and 13
tatic Hinged Box – Fiberglass

Dimensions W. (in.)	Depth (in.)	Interchange Guide Hoffmann	Hammond	Mfr's #	Order #	Price Ea.
6	4	A664CHORFG	PJ664T	VJ606HWPL1	05987151	$64.59
	4	A664CHORFG	PJ864T	VJ806HWPL1	05987169	66.78
	4	A1086CHORFG	PJ1086T	VJ1008HWPL1	05987177	74.72
	4	A12106CHORFG	PJ12106T	VJ1210HWPL2	05987185	90.86
	6	A14128CHORFG	PJ14126T	VJ1412HWPL2	05987193	103.18
1.	6	A16148CHORFG	PJ16148T	VJ1614HWPL2	05987201	118.23

ensions W. (in.)	For Box Size H x W (in.)	Interchange Guide Hoffmann	Electro Mate	Hammond	Mfr's #	Order #	Price Ea.
4⅞	6 x 6	A6P6	E6P6	14P0505	MP606S	05987094	$5.75
6⅞	8 x 6	A8P6	E8P6	14P0705	MP806S	05987102	6.29
8⅞	10 x 8	A10P8	E10P8	14P0905	MP1008S	05987110	7.66
5¾	12 x 10	A12P10	E12P10	14P1107	MP1210S	05987128	10.67
10⅞	14 x 12	A14P12	E14P12	14P1311	MP1412S	05987136	11.49
12⅞	16 x 14	A16P14	E16P14	14P1513	MP1614S	05987144	12.32

rglass Raised-Cover ed Box

WIEGMANN

e for bulky components. Fiberglass-reinforced polyester has stainless steel contiguous hinge, wall-mounting hardware, d padlock hasp. UV stabilized for indoor/outdoor use. Easily drilled or sawed and well-suited to high-temperature and environments. Threaded integral bushing for panel or terminal steel inner panels are optional.

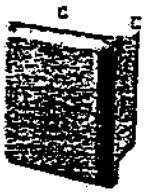

EMA/EEMAC Type 4, 4X and 12 specifications
ified LR21001 for use with industrial controls equipment. CSA

listed. Type 1, 2, 3, 4, 4X, 12 and 13
Raised-Cover Hinged Box

...h. (in.)	Depth (in.)	Wt. (Lbs.)	Mfr's #	Order #	Price Ea.
	4	5	RVJ1008HWPL1	05987235	$82.93
0	4	7	RVJ1210HWPL2	05987243	100.17
2	6	9	RVJ1412HWPL2	05987250	117.68
4	8	11	RVJ1614HWPL2	05987268	126.44

...ann	Electro Mate	Hammond	Mfr's #	Order #	Price Ea.
...8	E10P8	14P0905	MP1008S	05987110	$7.66
...10	E12P10	14P1107	MP1210S	05987128	10.67
...12	E14P12	14P1311	MP1412S	05987136	11.49
A16P14	E16P14	14P1513	MP1614S	05987144	12.32

Pedestal for Oiltight Consolet

WIEGMANN

Columns and bases, order separately, form a sturdy floor mount for your consolet. Wiring can be run through column or directly into the consolet. Columns, 14-gauge steel, have gasketed access plates and 10-gauge flanges. The 18" bases are 10-gauge steel and the 24" bases are 7-gauge. Both bases have added reinforcing, leveling screws and holes to fix them to floor. Columns and bases are interchangeable and ANSI 61 powder coat finish.

W. (in.)	Depth (in.)	Desc.	Interchange Guide Hoffmann	Electro Mate	Hammond	Mfr's #	Order #	Price Ea.
4	4	Column	A44CCOL	E44CCOL	1495C35	WA0404CCOL	54080122	$133.97
6	6	Column	A66CCOL	E66CCOL	1495305	WA0606CCOL	54080130	201.84
18	18	S Base	A18SBASE	E18SBASE	1495XK	WA18SBASE	54080148	88.12
24	24	S Base	A24SBASE	E24SBASE	1495XN	WA24SBASE	54080155	184.84

Fiberglass Screw-Cover Box

WIEGMANN

Fiberglass-reinforced polyester construction insulates and houses controls, instruments and electronic components from oil, dirt, dust and water in high-temperature and corrosive environments. Captive stainless steel cover screws and wall-mounting hardware included. UV stabilized for indoor/outdoor use. Threaded integral bushing for panel or terminal kits. White steel inner panels are optional.

- Enclosures are halogen free and self-extinguishing
- Meets NEMA/EEMAC Type 4, 4X and 12 specifications
- CSA certified LR21001 for use with industrial controls equipment. CSA Enc 4, 5
- UL 508 listed. Type 1, 2, 3, 4, 4X, 12 and 13

Fiberglass Screw-Cover Box

Dimensions Ht. (in.)	W (in.)	Depth (in.)	Interchange Guide Hoffmann	Mfr's #	Order #	Price Ea.
6	6	4	A664CHSCFG	VJ606W	05987037	$51.18
8	6	4	A864CHSCFG	VJ806W	05987045	53.37
10	8	4	A1086CHSCFG	VJ1008W	05987052	61.85
12	10	4	A12106CHSCFG	VJ1210W	05987060	70.88
14	12	6	A14128CHSCFG	VJ1412W	05987078	83.47
16	14	6	A16148CHSCFG	VJ1614W	05987086	99.07

Panels

Dimensions Ht. (in.)	W (in.)	Interchange Guide Hoffmann	Electro Mate	Hammond	Mfr's #	Order #	Price Ea.
4⅞	4⅞	A6P6	E6P6	14P0505	MP606S	05987094	$5.75
6⅞	4⅞	A8P6	E8P6	14P0705	MP806S	05987102	6.29
8⅞	6⅞	A10P8	E10P8	14P0905	MP1008S	05987110	7.66
10½	8⅞	A12P10	E12P10	14P1107	MP1210S	05987128	10.67
12⅞	10⅞	A14P12	E14P12	14P1311	MP1412S	05987136	11.49
14⅞	12⅞	A16P14	E16P14	14P1513	MP1614S	05987144	12.32

Fiberglass Hinged Box with Window

WIEGMANN

Indoor/outdoor fiberglass-reinforced polyester enclosure features a bonded polycarbonate window and twist latch. Has stainless steel contiguous hinge, wall-mounting hardware, latches and padlock hasp. UV stabilized and easily punched, drilled or sawed.
Well-suited to high-temperature and corrosive environments. Threaded integral bushing for panel or terminal kit.

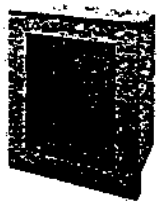

- Meets NEMA/EEMAC Type 4, 4X and 12 specifications
- CSA certified LR21001 for use with industrial controls equipment. CSA Enc 4, 5
- UL 508 listed. Type 1, 2, 3, 4, 4X, 12 and 13

Fiberglass Hinged Box with Window

Dimensions (in.) H	W	D	Interchange Guide Hoffmann	Hammond	Mfr's #	Order #	Price Ea.
12	10	4	A12106CHORFGW	PJ12106TW	CVJ1210HWPL2	05987276	$204.17
14	12	6	A14128CHORFGW	PJ14126TW	CVJ1412HWPL2	05987284	261.09
16	14	6	A16148CHORFGW	PJ16148TW	CVJ1614HWPL2	05987292	291.75
19	17	9		PJ20168TW	CVJ1816HWPL2	05987300	425.83

Panels

Dimensions Ht. (in.)	W (in.)	Interchange Guide Hoffmann	Electro Mate	Hammond	Mfr's #	Order #	Price Ea.
10½	8⅞	A12P10	E12P10	14P1107	MP1210S	05987128	$10.67
12⅞	10⅞	A14P12	E14P12	14P1311	MP1412S	05987136	11.49
14⅞	12⅞	A16P14	E16P14	14P1513	MP1614S	05987144	12.32
19	14 7/16			PJ20168T	MP1816S	05987227	18.06

D081 M8XY 8008

Hex Nuts

For information about nut materials, see page 2947.

Hex (Full) Nuts

Also known as hex finished nuts. These are general purpose nuts, typically in sizes ¼" and larger. Also Available: Grade 5 hex nuts with a plain finish. Ask for 95505A666 and specify screw size.

Dimensions for Hex Nuts—Conform to ANSI/ASME B18.2.2

Screw Size	Wd.	Ht.	Screw Size	Wd.	Ht.	Screw Size	Wd.	Ht.	Screw Size	Wd.	Ht.
¼"	7/16"	7/32"	5/8"	15/16"	35/64"	1¾"	2 1/16"	1 11/64"	2¼"	3⅜"	1 19/64"
5/16"	½"	17/64"	¾"	1⅛"	41/64"	1½"	2¼"	1 9/32"	2½"	3¾"	2 9/64"
⅜"	9/16"	21/64"	⅞"	1 5/16"	¾"	1⅝"	2 7/16"	1 23/64"	2¾"	4⅛"	2 37/64"
7/16"	11/16"	⅜"	1"	1½"	53/64"	1¾"	2⅝"	1½"	3"	4½"	2 37/64"
½"	¾"	7/16"	1⅛"	1 11/16"	37/32"	1⅞"	2¾"	1¾"	3½"	5½"	3½"
9/16"	⅞"	31/64"	1¼"	1⅞"	1 1/16"	2"	3"	1 23/32"	4"	6"	4"

Screw Size	18-8 Stainless Steel Pkg. Qty.		Per Pkg.	Type 316 Stainless Steel Pkg. Qty.		Per Pkg.	Grade 8 Zinc & Yellow Chromate Plated Steel Pkg. Qty.		Per Pkg.	Grade 8 Plain Steel Pkg. Qty.		Per Pkg.	Grade 8 Ultra-Coated Steel Pkg. Qty.		Per Pkg.
¼"-20	100	91845A029	$2.90	100	94804A029	$4.11	100	94895A029	$2.73	100	90499A029	$2.78	100	93827A211	$4.00
¼"-28	100	91845A105	3.05	100	94804A305	5.65	100	94895A805	3.15	100	90499A805	2.84	100	93827A216	4.22
5/16"-18	100	91845A030	4.04	100	94804A030	5.71	100	94895A030	3.70	100	90499A030	3.91	100	93827A219	5.78
5/16"-24	100	91845A115	4.24	50	94804A315	4.45	100	94895A810	4.43	100	90499A810	4.15	100	93827A222	6.00
⅜"-16	100	91845A031	5.69	50	94804A320	4.52	100	94895A031	5.41	100	90499A031	4.30	100	93827A225	7.78
⅜"-24	100	91845A125	7.21	25	94804A325	3.82	100	94895A815	6.33	100	90499A815	6.21	100	93827A228	8.22
7/16"-14	50	91845A300	6.14	25	94804A330	4.55	100	94895A817	10.82	100	90499A032	11.24	100	93827A236	14.00
7/16"-20	50	91845A135	7.18	25	94804A335	6.39	100	94895A820	12.55	100	90499A820	9.16	100	93827A241	14.89
½"-13	50	91845A310	7.08	25	94804A340	4.95	100	94895A823	13.37	100	90499A033	11.20	50	93827A245	9.56
½"-20	50	91845A145	8.44	20	94804A345	5.78	50	94895A825	8.49	50	90499A825	6.80	50	93827A249	10.11
9/16"-12	20	91845A315	7.42	10	94804A348	8.49	50	94895A827	13.27	50	90499A827	13.42	—	—	—
9/16"-18	10	91845A320	4.99	—	—	—	50	94895A830	14.62	50	90499A830	12.22	—	—	—
⅝"-11	25	91845A325	7.59	10	94804A351	4.02	25	94895A035	7.33	50	90499A832	10.05	25	93827A253	9.00
⅝"-18	25	91845A165	8.90	10	94804A355	8.19	25	94895A835	8.02	25	90499A835	6.11	25	93827A255	9.50
¾"-10	20	91845A330	9.94	10	94804A360	6.45	20	94895A036	9.53	50	90499A837	14.80	20	93827A259	11.91
¾"-16	10	91845A175	5.92	5	94804A365	5.62	25	94895A840	13.03	25	90499A840	13.44	20	93827A267	12.53
⅞"-9	10	91845A335	8.95	5	94804A370	5.68	25	94895A842	14.02	25	90499A842	14.96	—	—	—
⅞"-14	5	91845A185	7.23	5	94804A375	6.28	20	94895A845	13.78	20	90499A845	14.92	—	—	—
1"-8	1	91845A038•	1.21	1	94804A038•	1.56	10	94895A038	11.29	10	90499A847	9.78	—	—	—
1"-12	1	91845A203•	2.57	—	—	—	5	94895A850	10.38	5	90499A850	10.63	—	—	—
1"-14	1	91845A205•	2.25	—	—	—	10	94895A855	12.11	10	90499A855	12.76	—	—	—
1⅛"-7	1	91845A039•	2.42	1	94804A039•	2.98	5	94895A857	9.13	5	90499A857	6.49	—	—	—
1⅛"-12	1	91845A215•	4.70	—	—	—	5	94895A858	10.34	5	90499A858	7.36	—	—	—
1¼"-7	1	91845A040•	3.08	1	94804A040•	4.15	5	94895A859	11.40	5	90499A859	10.41	—	—	—
1¼"-12	1	91845A235•	5.75	—	—	—	5	94895A860	14.73	5	90499A860	11.53	—	—	—
1⅜"-6	1	91845A042•	5.87	—	—	—	1	94895A042•	4.47	1	90499A042•	7.27	—	—	—
1⅜"-12	—	—	—	—	—	—	1	94895A863•	5.34	1	90499A863•	3.06	—	—	—
1½"-6	1	91845A041•	5.99	1	94804A041•	6.73	1	94895A041•	5.26	1	90499A041•	3.32	—	—	—
1½"-12	1	91845A265•	9.70	—	—	—	1	94895A865•	6.79	1	90499A865•	4.11	—	—	—
1¾"-5	1	91845A044•	9.83	—	—	—	1	94895A044•	21.00	1	90499A044•	11.93	—	—	—
1¾"-12	—	—	—	—	—	—	1	94895A868•	23.52	1	90499A868•	9.61	—	—	—
2"-4½	1	91845A045•	13.24	—	—	—	1	94895A045•	34.00	1	90499A045•	11.24	—	—	—
2"-12	—	—	—	—	—	—	1	94895A870•	34.94	1	90499A870•	12.00	—	—	—

Screw Size	Grade 5 Zinc-Plated Steel Pkg. Qty.		Per Pkg.	Grade 2 Zinc-Plated Steel Pkg. Qty.		Per Pkg.	Grade 2 Plain Steel Pkg. Qty.		Per Pkg.	Grade 2 Hot-Dipped Galvanized Steel Pkg. Qty.		Per Pkg.
¼"-20	100	95462A029	$1.38	100	90473A029	$1.29	100	90490A029	$1.19	100	90371A029	$2.75
¼"-28	100	95462A505	1.67	100	90473A205	1.29	100	90490A205	1.11	—	—	—
5/16"-18	100	95462A030	2.28	100	90473A030	2.00	100	90490A030	1.88	100	90371A019	3.20
5/16"-24	100	95462A510	2.29	100	90473A210	2.00	100	90490A210	1.89	—	—	—
⅜"-16	100	95462A031	3.28	100	90473A031	2.93	100	90490A031	2.13	100	90371A031	5.30
⅜"-24	100	95462A515	3.36	100	90473A215	2.93	100	90490A215	2.49	—	—	—
7/16"-14	100	95462A032	5.84	100	90473A217	5.24	100	90490A032	3.40	100	90371A032	11.37
7/16"-20	100	95462A520	5.80	100	90473A220	5.24	100	90490A220	4.39	—	—	—
½"-13	100	95462A033	7.76	100	90473A223	6.96	100	90490A033	4.88	50	90371A045	5.81
½"-20	100	95462A525	7.51	100	90473A225	6.96	100	90490A225	5.88	—	—	—
9/16"-12	50	95462A528	6.70	50	90473A227	5.88	100	90490A034	8.59	25	90371A049	10.42
9/16"-18	50	95462A530	6.36	50	90473A230	5.88	100	90490A230	9.16	—	—	—
⅝"-11	50	95462A533	6.52	50	90473A233	7.08	100	90490A035	10.35	25	90371A050	5.95
⅝"-18	50	95462A535	7.59	50	90473A235	7.08	100	90490A235	11.56	—	—	—
¾"-10	25	95462A538	6.00	50	90473A237	11.38	50	90490A436	8.26	25	90371A055	9.47
¾"-16	25	95462A540	6.26	50	90473A240	11.38	50	90490A240	9.67	—	—	—
⅞"-9	25	95462A542	9.93	25	90473A242	9.54	50	90490A037	12.17	10	90371A060	5.96
⅞"-14	25	95462A545	10.76	25	90473A245	9.54	25	90490A245	7.67	—	—	—
1"-8	10	95462A548	6.99	10	90473A038	6.43	20	90490A438	9.79	10	90371A065	9.09
1"-12	5	95462A550	9.02	5	90473A250	8.11	10	90490A250	5.61	—	—	—
1"-14	10	95462A555	6.84	10	90473A255	6.20	20	90490A255	11.01	—	—	—
1⅛"-7	10	95462A557	8.27	10	90473A039	7.46	10	90490A439	6.91	1	90371A067•	1.42
1⅛"-12	10	95462A558	10.39	5	90473A258	4.75	10	90490A258	7.33	—	—	—
1¼"-7	5	95462A559	6.43	10	90473A040	11.60	10	90490A440	9.85	1	90371A070•	2.26
1¼"-12	5	95462A560	7.90	5	90473A260	7.16	5	90490A260	6.51	—	—	—
1⅜"-6	5	95462A562	9.35	5	90473A042	8.46	5	90490A442	6.76	—	—	—
1⅜"-12	5	95462A563	12.30	5	90473A263	11.04	5	90490A263	9.08	—	—	—
1½"-6	1	95462A564•	2.93	1	90473A041•	2.67	5	90490A441	10.49	1	90371A073•	2.83
1½"-12	1	95462A565•	3.57	1	90473A265•	2.25	5	90490A265	10.39	—	—	—

Large-Diameter Grade 2 Plain Steel

Screw Size		Each	Screw Size		EachSc	rew Size		Each	Screw Size		Each
1⅜"-5½	90490A061	$2.68	1⅞"-12	90490A269	$4.34	2½"-4	90490A051	$9.79	3½"-4	90490A310	$107.00
1⅜"-12	90490A266	3.48	2"-4½	90490A048	4.20	2½"-12	90490A275	14.45	3½"-8	90490A316	107.00
1¾"-5	90490A044	2.94	2¼"-4½	90490A048	5.65	3"-4	90490A055	16.53	4"-4	90490A321	125.00
1⅞"-5	90490A065	3.63	2¼"-12	90490A273	9.86	3"-12	90490A280	24.16	4"-8	90490A327	125.00

• Sold individually.

(Continued on following page)

We would love to hear your comments.

Screw Type > System of Measurement > Thread Size > Length > Material > Head Style

Socket Cap Screws

1 item matches all of your specifications.

Part Number 91306A379

1-99 Each $25.15 per 100
100 or more $20.07 per 100

System of Measurement:	Inch	
Material:	Zinc-Plated Steel	Select to change value
Thread Size:	1/4"-20	Select to change value
Length:	3/4"	Select to change value
Drive:	Hex	
Head Style:	Button	Select to change value
Screw Type:	Standard	

To Order this item, enter a quantity and click on the "Add to Order" button.

View this item on its catalog page.

CAD View a technical drawing of this item.

CAD 3D View a 3-D Model of this item.

To change any other features, please start your search again.

) Bar mounting brackets → 12 bolts

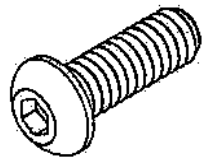

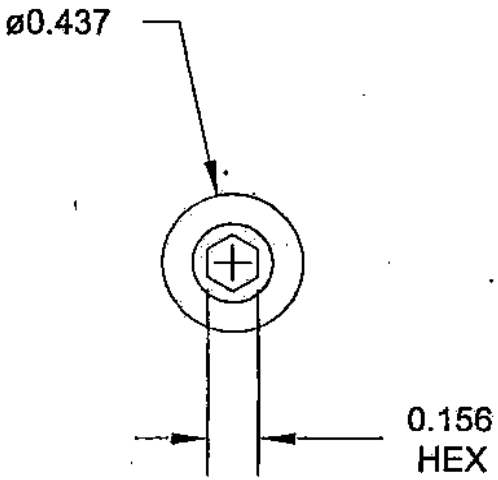

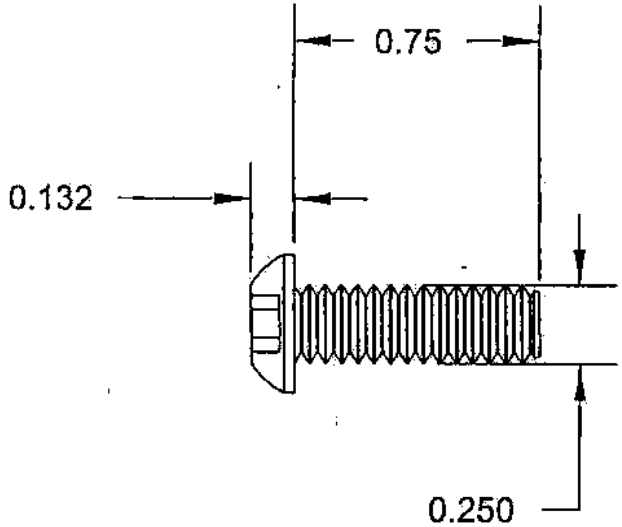

Bar Mounting Brackets → 12 bolts

McMASTER-CARR SUPPLY COMPANY	PART NUMBER 91255A540
DATE JUNE 2000 PAGE 1 OF 1	Alloy Steel Button Head Socket Cap Screw 1/4"-20 Coarse Thread, 3/4" Length
SCALE 0.0 0.5 1.0	
UNLESS OTHERWISE SPECIFIED, DIMENSIONS ARE IN INCHES	http://www.mcmaster.com

(c) 2000 McMaster-Carr Supply Company

Socket Head Cap Screws

Technical drawings and 3-D models available for items with this symbol. CAD

Button-Head Cap Screw Size, Hex Key Information & Dimensions

Screw Size	No. 0	No. 2	No. 3	No. 4	No. 5	No. 6	No. 8	No. 10	1/4"	5/16"	3/8"	1/2"	5/8"
Decimal Approx.	0.060"	0.086"	0.099"	0.112"	0.125"	0.138"	0.164"	0.190"	0.250"	0.312"	0.375"	0.500"	0.625"
Hex Key Size	0.035"	0.05"	1/16"	1/16"	5/64"	5/64"	3/32"	1/8"	5/32"	3/16"	7/32"	5/16"	3/8"
Head Height	0.032"	0.046"	0.052"	0.059"	0.066"	0.073"	0.087"	0.101"	0.132"	0.166"	0.199"	0.265"	0.331"
Head Diameter	0.114"	0.164"	0.188"	0.213"	0.238"	0.262"	0.312"	0.361"	0.437"	0.547"	0.656"	0.875"	1.000"
Minimum Thread Length▲													
18-8 Stainless Steel	1/2"	5/8"	—	3/4"	3/4"	3/4"	7/8"	7/8"	1"	1 1/8"	1 1/4"	1 1/2"	1 3/4"
Alloy Steel	1/2"	1/2"	1/2"	1/2"	1/2"	5/8"	3/4"	1"	1"	1 1/4"	1 1/4"	2"	—

▲ Manufacturing standards allow thread length to vary between the minimum thread length and fully threaded. Screws shorter than the minimum thread lengths listed above are fully threaded.

Button Head CAD

Great for when a wider bearing surface, low head height, or more finished appearance is desired, and in materials too thin to accommodate countersunk flat-head screws. Class 3A thread fit. Length is measured from under head.

18-8 Stainless Steel—Offers excellent corrosion resistance. It can be mildly magnetic. Rockwell hardness is B100. Minimum tensile strength is 100,000 psi.

Alloy Steel—Made of heat-treated alloy steel with a black-oxide finish, these screws exceed Grade 5 and conform to ASTM F835. Rockwell hardness is C39-44 for sizes up to and including 1/2" diameter; C37-44 for sizes over 1/2" diameter. Minimum tensile strength is 145,000 psi for sizes up to and including 1/2" diameter; 135,000 psi for sizes over 1/2" diameter. Made in the U.S.A., except sizes indicated by a •.

Also Available: Zinc-plated alloy steel: 4-40, 6-32 1/4"-20, 5/16"-18, 3/8"-16, and 1/2"-13 sizes in various lengths from 3/4" to 1 1/2". Please ask for 91306A500 and specify size and length.

18-8 Stainless Steel

Lg.	Pkg. Qty.		Per 100
0-80			*Fine Thread*
1/8"	100	92949A050	$13.69
2-56			*Coarse Thread*
1/8"	100	92949A074	$7.58
3/16"	100	92949A076	7.81
1/4"	100	92949A077	7.95
5/16"	100	92949A078	8.67
3/8"	100	92949A079	9.04
1/2"	100	92949A081	12.29
4-40			*Coarse Thread*
1/8"	100	92949A103	$5.02
3/16"	100	92949A105	4.20
1/4"	100	92949A106	4.37
5/16"	100	92949A107	4.45
3/8"	100	92949A108	4.54
1/2"	100	92949A110	4.86
5/8"	100	92949A112	5.15
3/4"	100	92949A113	5.49
1"	100	92949A116	6.27
1 1/4"	100	92949A118 ♦	25.76
5-40			*Coarse Thread*
1/4"	100	92949A131	$13.11
3/8"	100	92949A133	13.19
6-32			*Coarse Thread*
1/8"	100	92949A141	$7.70
3/16"	100	92949A143	4.79
1/4"	100	92949A144	4.92
5/16"	100	92949A145	5.05
3/8"	100	92949A146	5.48
1/2"	100	92949A148	5.72
5/8"	100	92949A150	5.92
3/4"	100	92949A151	6.22
1"	100	92949A153	7.74
1 1/4"	100	92949A160	9.41
1 1/2"	100	92949A157 ♦	52.27
8-32			*Coarse Thread*
3/16"	100	92949A189	$6.08
1/4"	100	92949A190	6.00
5/16"	100	92949A191	6.15
3/8"	100	92949A192	6.23
1/2"	100	92949A194	6.71
5/8"	100	92949A196	7.14
3/4"	100	92949A197	7.51
1"	100	92949A199	8.55
1 1/4"	100	92949A201	8.70
1 1/2"	100	92949A203	13.69
10-24			*Coarse Thread*
1/4"	100	92949A238	$6.71
3/8"	100	92949A240	6.81
1/2"	100	92949A242	7.10
5/8"	100	92949A244	7.78
3/4"	100	92949A245	9.33
7/8"	100	92949A246	9.58
1"	100	92949A247	10.66
1 1/4"	100	92949A249	12.13
1 1/2"	100	92949A251	14.99
2"	50	92949A253 ♦	55.00
10-32			*Fine Thread*
1/4"	100	92949A261	$6.81
5/16"	100	92949A262	6.84
3/8"	100	92949A263	6.90
7/16"	100	92949A264	7.47
1/2"	100	92949A265	7.62
5/8"	100	92949A267	7.78
3/4"	100	92949A269	8.81
7/8"	100	92949A270	9.58
1"	100	92949A271	11.29
1 1/4"	100	92949A272	11.96
1 1/2"	100	92949A273	14.94
1 3/4"	50	92949A274	21.10
2"	50	92949A275 ♦	54.98
1/4"-20			*Coarse Thread*
3/8"	100	92949A535	$10.82
1/2"	100	92949A537	11.20
5/8"	100	92949A539	12.65
3/4"	100	92949A540	13.36
7/8"	100	92949A541	14.88
1"	50	92949A542	16.09
1 1/4"	50	92949A544	17.83
1 1/2"	50	92949A546	20.24
1 3/4"	50	92949A548	24.81
2"	50	92949A550	28.24
2 1/2"	25	92949A552	39.36
3"	25	92949A554	48.70
1/4"-28			*Fine Thread*
3/8"	100	92949A560 ♦	$16.33
1/2"	100	92949A562 ♦	16.97
5/8"	100	92949A563 ♦	17.64
3/4"	100	92949A564 ♦	20.44
1"	50	92949A566	23.23
1 1/4"	50	92949A567	28.09
1 1/2"	50	92949A571 ♦	38.87
5/16"-18			*Coarse Thread*
3/8"	100	92949A576 ♦	$20.54
1/2"	100	92949A578 ♦	21.35
5/8"	100	92949A580 ♦	21.88
3/4"	100	92949A581 ♦	22.50
7/8"	100	92949A583 ♦	24.39
1"	50	92949A582	26.72
1 1/4"	50	92949A585 ♦	31.49
1 1/2"	50	92949A587 ♦	33.81
2"	50	92949A591 ♦	47.05
2 1/2"	50	92949A593 ♦	62.99
5/16"-24			*Fine Thread*
3/8"	100	92949A595 ♦	$58.48
1/2"	100	92949A597 ♦	61.57
5/8"	100	92949A598 ♦	64.75
3/4"	100	92949A599 ♦	67.92
1"	50	92949A603 ♦	75.44
3/8"-16			*Coarse Thread*
1/2"	50	92949A619 ♦	$32.53
5/8"	50	92949A621 ♦	33.53
3/4"	50	92949A622 ♦	35.06
7/8"	50	92949A623 ♦	87.88
3/8"-16 (Cont.)			
1"	50	92949A624 ♦	$37.01
1 1/4"	50	92949A626 ♦	43.89
1 1/2"	50	92949A628 ♦	52.20
2"	50	92949A632 ♦	64.58
2 1/2"	25	92949A634 ♦	140.00
3"	25	92949A636 ♦	99.56
3/8"-24			*Fine Thread*
3/4"	50	92949A650 ♦	$85.71
3/8"-24 (Cont.)			
1"	50	92949A652 ♦	$111.43
1 1/2"	50	92949A655 ♦	136.85
1/2"-13			*Coarse Thread*
3/4"	50	92949A710 ♦	$271.63
1"	50	92949A712 ♦	97.31
1 1/4"	50	92949A714 ♦	102.70
1 1/2"	50	92949A716 ♦	123.22
2"	50	92949A720 ♦	146.87

Alloy Steel

Lg.	Pkg. Qty.		Per 100
2-56			*Coarse Thread*
1/8"	100	91255A074 ♦	$21.21
3/16"	100	91255A076 ♦	26.00
1/4"	100	91255A077 ♦	27.80
5/16"	100	91255A078 ♦	27.48
3/8"	100	91255A079 ♦	29.90
1/2"	100	91255A081 ♦	31.60
3-48			*Coarse Thread*
3/16"	100	91255A091 • ♦	$34.43
1/4"	100	91255A092 • ♦	34.69
3/8"	100	91255A094 • ♦	34.88
4-40			*Coarse Thread*
1/8"	100	91255A103 • ♦	$17.28
3/16"	100	91255A105 •	8.18
1/4"	100	91255A106	7.83
5/16"	100	91255A107	8.78
3/8"	100	91255A108	8.09
1/2"	100	91255A110	8.62
5/8"	100	91255A112 •	14.43
3/4"	100	91255A113 • ♦	15.55
7/8"	100	91255A115 • ♦	17.12
1"	100	91255A116 • ♦	19.98
1 1/4"	100	91255A117 ♦	35.29
5-40			*Coarse Thread*
1/4"	100	91255A121 •	$10.12
3/8"	100	91255A123 • ♦	17.14
1/2"	100	91255A125 ♦	18.57
6-32			*Coarse Thread*
1/8"	100	91255A140 • ♦	$22.56
3/16"	100	91255A142 •	10.00
1/4"	100	91255A144	7.96
5/16"	100	91255A145 • ♦	18.40
3/8"	100	91255A146	8.09
1/2"	100	91255A148	8.62
5/8"	100	91255A150	9.41
3/4"	100	91255A151 • ♦	18.68
7/8"	100	91255A152 ♦	19.46
1"	100	91255A153 • ♦	19.98
1 1/4"	100	91255A155 • ♦	27.50
1 1/2"	100	91255A157 ♦	34.51
8-32			*Coarse Thread*
3/16"	100	91255A189 ♦	$18.00
1/4"	100	91255A190	8.75
5/16"	100	91255A191	12.34
3/8"	100	91255A192	9.28
1/2"	100	91255A194	9.35
8-32 (Cont.)			
5/8"	100	91255A196	$10.67
3/4"	100	91255A197	11.27
1"	100	91255A199	13.06
1 1/4"	100	91255A201 ♦	89.81
1 1/2"	100	91255A203 ♦	94.29
2 1/4"	100	91255A206 ♦	141.89
10-24			*Coarse Thread*
1/4"	100	91255A238	$9.61
3/8"	100	91255A240	9.74
1/2"	100	91255A242	10.15
5/8"	100	91255A244	10.67
3/4"	100	91255A245	11.07
7/8"	100	91255A246	11.93
1"	100	91255A247	13.33
1 1/4"	50	91255A248 • ♦	32.84
1 1/2"	50	91255A250	26.40
2"	50	91255A252 ♦	38.88
10-32			*Fine Thread*
1/4"	100	91255A261	$9.61
5/16"	100	91255A262 ♦	74.50
3/8"	100	91255A263	9.74
1/2"	100	91255A265	10.15
5/8"	100	91255A267	10.67
3/4"	100	91255A269	11.07
7/8"	100	91255A271	11.93
1"	100	91255A273	13.33
1 1/4"	100	91255A274 ♦	80.83
1 1/2"	100	91255A275 • ♦	52.32
1 3/4"	50	91255A276 ♦	36.72
2"	100	91255A278 ♦	36.24
1/4"-20			*Coarse Thread*
1/4"	100	91255A533 • ♦	$18.75
3/8"	100	91255A535	11.18
1/2"	100	91255A537	11.19
5/8"	100	91255A539	11.92
3/4"	100	91255A540	12.44
7/8"	50	91255A541	13.25
1"	50	91255A542	14.35
1 1/4"	100	91255A544 • ♦	46.56
1 1/2"	100	91255A546 • ♦	54.72
1 3/4"	100	91255A548 • ♦	54.72
2"	100	91255A545 ♦	44.88
2 1/2"	100	91255A547 • ♦	44.88
3"	100	91255A549 ♦	67.44

(Continued on following page)

♦ *These sizes are available in less than full-package quantities. Prices are 10% to 25% higher.*

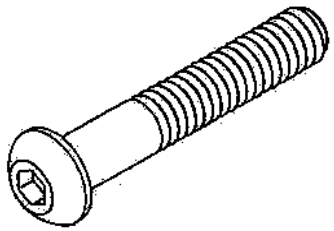

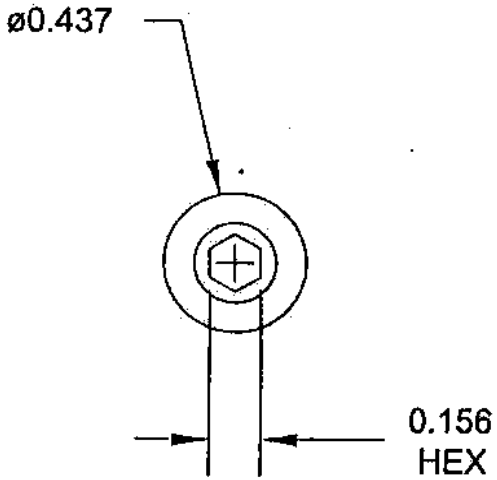

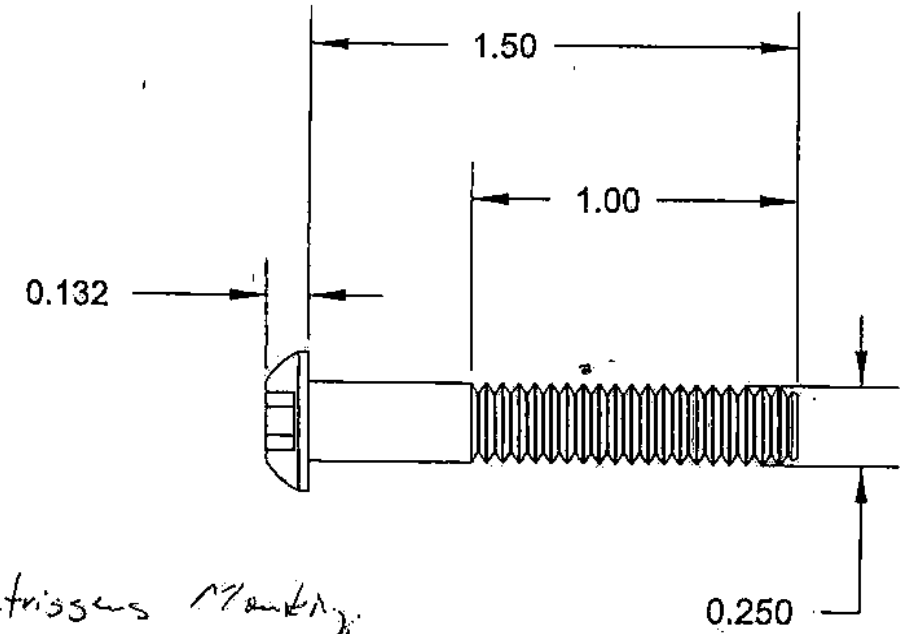

Outrigger Mounting
Tube → 3 holes

NOTES:
THREAD LENGTH SHOWN IS MINIMUM THREAD LENGTH.

McMASTER-CARR
SUPPLY COMPANY

DATE JUNE 2000	PAGE 1 OF 1
SCALE 0.0 0.5 1.0	
UNLESS OTHERWISE SPECIFIED, DIMENSIONS ARE IN INCHES	

PART NUMBER 91255A546

Alloy Steel Button Head Socket Cap Screw 1/4"-20 Coarse Thread, 1-1/2" Lgth, Non-Std Size

http://www.mcmaster.com

(c) 2000 McMaster-Carr Supply Company

We would love to hear your comments.

lat Washers

item matches all of your specifications.

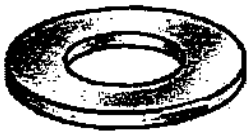

Part Number 91090A105

$4.00 per Pack of 100

Type:	Round
Material:	Zinc-Plated Steel
Screw Size (Inch):	1/4"
Inside Diameter (Inch):	17/64"
Outside Diameter (Inch):	1/2"
Thickness (Inch):	3/64"
Thickness Tolerance:	±.004"

Select to change value

To Order this item, enter a quantity and click on the "Add to Order" button.

View this item on its catalog page.

To change any other features, please start your search again.

For information about material, see page 2947. For shim washers, see pages 2992-2995.

Military Specification 27183 Cadmium-Plated Steel

Perfect for environments where corrosion protection is essential. Material and dimensions meet FF-W-92. Washers are made of C1005-C1020 steel and meet QQ-P-416, Type 2, Class 3. Rockwell hardness is B55.

Screw Size	Dash No.	ID	OD	Thickness, Min.-Max.	Pkg. Qty.		Per Pkg.
0-1	1	0.078"	0.188"	0.016"-.025"	100	98032A413	$4.05
2	2	0.094"	0.250"	0.016"-.025"	100	98032A417	4.05
4	3	0.125"	0.250"	0.017"-.028"	100	98032A421	4.05
4	4	0.125"	0.312"	0.025"-.040"	100	98032A425	3.10
4	44	0.125"	0.375"	0.025"-.040"	100	98032A429	3.81
5	45	0.141"	0.281"	0.025"-.040"	100	98032A432	4.05
6	43	0.156"	0.250"	0.013"-.020"	100	98032A436	3.10
6	5	0.156"	0.312"	0.027"-.048"	100	98032A443	4.05
6	6	0.156"	0.375"	0.036"-.065"	100	98032A447	3.57
8	7	0.188"	0.375"	0.036"-.065"	100	98032A451	4.05
8	41	0.188"	0.438"	0.036"-.065"	100	98032A457	4.43
8	46	0.188"	0.500"	0.051"-.080"	100	98032A462	5.52
10	47	0.219"	0.365"	0.025"-.040"	100	98032A466	3.57
10	8	0.219"	0.438"	0.036"-.065"	100	98032A469	$3.10
10	42	0.219"	0.500"	0.036"-.065"	100	98032A472	4.76
10	49	0.250"	0.562"	0.025"-.040"	100	98032A477	4.52
10	9	0.250"	0.562"	0.051"-.080"	100	98032A481	5.86
10	50	0.250"	0.625"	0.025"-.040"	100	98032A485	4.90
10	48	0.250"	0.938"	0.051"-.080"	100	98032A489	13.10
10	51	0.250"	1.000"	0.051"-.080"	100	98032A492	14.52
1/4"	10	0.281"	0.625"	0.051"-.080"	100	98032A495	6.43
1/4"	52	0.281"	0.734"	0.051"-.080"	100	98032A498	8.33
1/4"	11	0.312"	0.734"	0.051"-.080"	100	98032A501	7.86
5/16"	12	0.344"	0.688"	0.051"-.080"	100	98032A505	6.90
5/16"	13	0.375"	0.875"	0.064"-.104"	100	98032A509	13.10
3/8"	14	0.406"	0.812"	0.051"-.080"	50	98032A514	5.00

Large OD Zinc-Plated Steel and Stainless Steel

Also known as fender/plaster washers, these special-size washers have an extra-wide bearing surface to eliminate the need for patching holes. Zinc-plated steel is made of C1006-C1015 steel and has a Rockwell hardness of B49. Stainless steel washers have a Rockwell hardness of B70. Thickness tolerance for *zinc-plated steel* is ±.004", for *18-8 stainless steel* is ±.007", and for *Type 316 stainless steel* is ±.007". *Slotted* washers can be installed and removed without removing the screw and nut.

Standard

Slotted

Screw Size	ID	OD	Zinc-Plated Steel Thick.	Zinc-Plated Steel Pkg. Qty.	Zinc-Plated Steel	Zinc-Plated Steel Per Pkg.	18-8 Stainless Steel Thick.	18-8 Stainless Steel Pkg. Qty.	18-8 Stainless Steel	18-8 Stainless Steel Per Pkg.	Type 316 Stainless Steel Pkg. Qty.	Type 316 Stainless Steel	Type 316 Stainless Steel Per Pkg.
Standard													
6	9/64"	5/8"	0.031"	100	91090A100	$3.38	0.031"	100	90313A101	$4.47	100	91525A103	$11.33
6	5/32"	9/16"	0.047"	100	91090A102	3.45							
8	11/64"	3/4"	0.040"	100			0.040"	100	90313A102	4.58	50	91525A107	6.66
8	3/16"	3/4"	0.047"	100	91090A101	3.88							
10	13/64"	1/2"	0.047"	100	91090A103	2.73	0.040"	100	90313A2	4.68			
10	13/64"	11/16"					0.040"	100	90313A103	4.97	100	91525A110	14.06
10	13/64"	1"	0.047"	100	91090A120	2.67	0.040"	100	90313A104	7.10	50	91525A114	9.75
10	13/64"	3/4"					0.040"	100	90313A400	7.02			
10	7/32"	1 1/4"	0.047"	100	91090A104	5.80							
1/4"	17/64"	1/2"	0.047"	100	91090A105	4.00							
1/4"	17/64"	9/16"	0.047"	100	91090A106	4.13							
1/4"	17/64"	7/8"	0.047"	100	91090A107	3.75							
1/4"	9/32"	1"	0.047"	100	91090A108	2.75	0.050"	100	90313A107	7.67	25	91525A120	5.36
1/4"	9/32"	1 1/4"	0.047"	100	91090A109	3.70	0.050"	100	90313A108	11.46	25	91525A124	7.24
1/4"	9/32"	1 1/2"	0.047"	100	91090A113	6.09	0.063"	50	90313A109	9.44	25	91525A128	12.07
1/4"	9/32"	2"	0.047"	100	91090A116	13.50	0.063"	10	90313A106	4.68	10	91525A129	9.92
5/16"	21/64"	5/8"	0.047"	100	91090A110	4.71							
5/16"	11/32"	1 1/4"	0.047"	100	91090A111	4.38	0.050"	50	90313A111	6.16			
5/16"	11/32"	1 1/2"	0.047"	100	91090A119	5.37	0.063"	50	90313A110	9.59	10	91525A130	4.65
5/16"	11/32"	2"					0.063"	10	90313A112	4.75	10	91525A133	9.98
3/8"	13/32"	1 1/4"	0.047"	100	91090A121	6.82	0.050"	50	90313A114	6.21			
3/8"	13/32"	1 1/2"	0.047"	100	91090A115	7.11	0.063"	50	90313A115	9.74	10	91525A140	5.11
3/8"	13/32"	1 5/8"	0.047"	100	91090A122	13.18							
3/8"	13/32"	2"	0.047"	100	91090A117	13.75	0.063"	10	90313A116	4.99	10	91525A143	10.10
1/2"	17/32"	1 1/2"	0.047"	50	91090A114	4.68	0.063"	50	90313A117	10.82	10	91525A145	5.62
1/2"	17/32"	2"	0.047"	50	91090A118	6.61	0.063"	10	90313A118	3.80	10	91525A150	7.42
Slotted													
1/4"	9/32"	1 1/2"	0.047"	100	91080A022	13.63	0.047"	10	90313A032	4.70			

Large-OD Case-Hardened Steel

With an expanded bearing surface, these washers help distribute wide loads. Washers are made of C1018 steel and have a Rockwell hardness of B71. They are dark with a black-oxide finish and are case hardened to .003"-.005" deep. Thickness tolerance is ±.005.

Screw Size	ID	OD	Thick.	Pkg. Qty.		Per Pkg.
6	5/32"	9/16"	0.125"	10	92140A101	$4.24
8	3/16"	3/4"	0.125"	10	92140A104	4.55
10	13/64"	1"	0.125"	10	92140A108	4.85
1/4"	9/32"	1"	0.125"	10	92140A112	5.15
1/4"	9/32"	1 1/2"	0.125"	10	92140A114	10.91
5/16"	11/32"	1 1/4"	0.125"	10	92140A116	8.79
3/8"	13/32"	1 5/8"	0.125"	10	92140A118	12.12
1/2"	17/32"	2"	0.125"	10	92140A120	13.65

SAE Type 316 Stainless Steel

These washers offer tighter tolerances than standard washers of comparable size. Rockwell hardness is B70.

Screw Size	ID	OD	Thickness, Min.-Max.	Pkg. Qty.		Per Pkg.
10	7/32"	1/2"	0.036"-.065"	100	91950A027	$10.39
1/4"	9/32"	5/8"	0.051"-.080"	50	91950A029	5.42
5/16"	11/32"	11/16"	0.051"-.080"	50	91950A030	6.78
3/8"	13/32"	13/16"	0.051"-.080"	50	91950A031	8.12
1/2"	17/32"	1 1/16"	0.074"-.121"	25	91950A033	8.39
5/8"	21/32"	1 5/16"	0.074"-.121"	10	91950A035	6.85
3/4"	13/16"	1 1/2"	0.108"-.160"	10	91950A036	9.86

Large OD Zinc-Plated Steel Assortment

This 386-piece zinc-plated steel assortment includes 12 screw sizes. The sizes listed are screw size × washer OD. Includes 48 each: 3/16" × 1", 1/4" × 1". 40 each: 1/8" × 3/4", 5/32" × 7/8", 3/16" × 1 1/4". 30 each: 1/4" × 1 1/4". 24 each: 1/4" × 1 1/2", 5/16" × 1 1/2", 5/16" × 1 5/8", 3/8" × 1 1/4", 3/8" × 1 1/2". 20 each: 5/16" × 1 1/4". Furnished in an 11" Lg. × 5 1/2" Wd. × 1 3/4" Dp. compartmented plastic box with lid chart.

98861A252 ..... Each $39.48

High-Strength 17-7 PH Stainless Steel

Suitable for use in conditions where steel, no matter how well plated, cannot survive. These washers retain the strength and hardness of heat-treated steel with the corrosion resistance of stainless steel. Precipitation-hardened (PH) stainless steels can be heat treated to higher strengths than any other stainless steel. Washers are heat treated to a Rockwell hardness of C40-C48. Thickness tolerance is ±.005". May be mildly magnetic. Made in the U.S.A.

Screw Size	ID	OD	Thick.	Pkg. Qty.		Per Pkg.
1/4"	5/16"	3/4"	0.063"	10	91860A029	$4.39
5/16"	3/8"	7/8"	0.078"	10	91860A030	7.78
3/8"	7/16"	1"	0.078"	10	91860A031	9.19
7/16"	1/2"	1 1/4"	0.078"	5	91860A032	6.58
1/2"	9/16"	1 3/8"	0.078"	5	91860A033	6.30
9/16"	5/8"	1 1/2"	0.090"	5	91860A034	7.80
5/8"	11/16"	1 3/4"	0.120"	1	91860A035•	3.69
3/4"	13/16"	2"	0.131"	1	91860A036•	4.61
1"	1 1/16"	2"	0.131"	1	91860A038•	4.92

• Sold individually.

Washers > Type > Inch Size > Inside Diameter (Inch) > Material > Package Quantity

Lock Washers

Item matches all of your specifications.

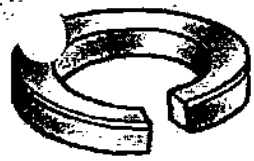

Part Number 91102A750

$0.83 per Pack of 100

Type:	Spring
Style:	Regular Spring
Material:	Zinc-Plated Steel
Inch Size:	1/4"
Inside Diameter (Inch):	.260"
Outside Diameter (Inch):	.487"
Thickness (Inch):	.062"
Package Quantity:	100

Select to change value

Select to change value

To Order this item, enter a quantity and click on the "Add to Order" button.

View this item on its catalog page.

To change any other features, please start your search again.

) – Outisser Mounting Tube 3

-) – ~~Bar~~ Mounting ~~Bracket~~ → Washers
Bar Brackets 12

( )

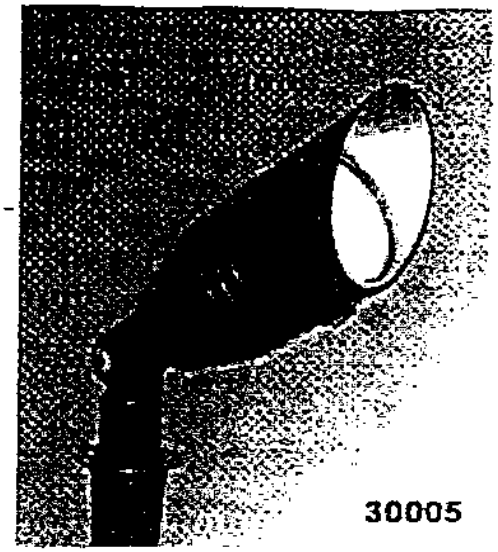

30005

30005

Die-Cast Aluminium Body
With Tempered Glass Lens,
Non-Corrosive Stake And Hood.

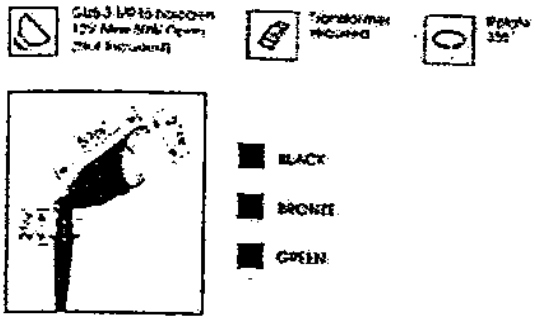

30005

Next>

Halogen lamps

Low-voltage dichroic reflector MASTERline ES

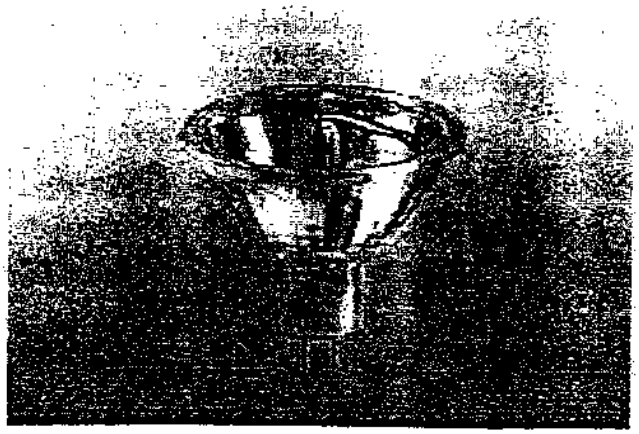

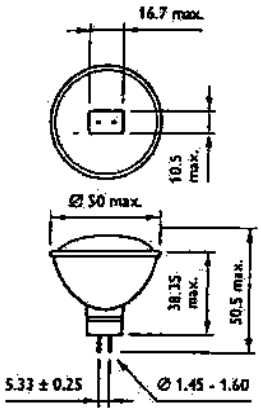

Dimensions in mm

Notes: 1. All types designed for 12 V power supply. Lamp characteristics are given for 12 V. Cap GU 5.3 interchangeable with GX 5.3 IEC 61-1.
2. Numerical technical data given are average values and do not refer to single lamps.
3. Manufacturer reserves the right to change specifications without prior notice.

The MASTERline ES is an advanced MR16 lamp with infrared technology introduced by Philips.
Like its predecessor, the MASTERline PLUS, the MASTERline ES sets a new standard in performance in display lighting dichroics.
The technology used by Philips is based on the application of a heat-reflecting coating on the inner lamp burner. Normally only 10-15 % of the energy consumed by a halogen lamp produces visible light; the rest is lost as heat. The infrared burner coating reflects an important part of the waste heat back to the filament, so less energy is needed to operate the lamp.
Moreover the lamp has a revolutionary compact and precision-shaped double-ended burner which enables the infrared reflecting coating to perform to its fullest potential.
The MASTERline ES is the best long life low-voltage product in the world, with a burner efficacy (lm/W) improvement of up to 40 %!

The increased efficacy serves to lower the energy consumption while maintaining light output.
Only the MASTERline ES is aimed at replacing MASTERline PLUS and all conventional MR16 lamps (35/50/75 W) offering energy savings of up to 40 %.
All the other benefits of halogen lighting, such as bright, sparkling white light, excellent colour rendering, dimming possibilities and almost perfect lumen maintenance, are retained.
MASTERline ES offers the widest range of high-performance MR16 lamps on the market.

Other benefits of MASTERline ES
- Low UV output ; strongly reduced fading of goods.
- Colour temperature of up to 3150 K accentuating objects.
- Complex reflector design for excellent beam performance.
- GU 5.3 base; extra retention in luminaire

Applications
Shops/stores, hotels, restaurants, exhibitions/art galleries

Technical and lighting data

Type	Voltage V	Wattage W	Beam angle degs	Cap/ base	ANSI	Luminous intensity cd	Average life h	Ordering number	EOC
14578	12	20	8	GU5.3	ESX	6500	5000	9240 458 17100	413642
14579	12	20	36	GU5.3	BAB	1000	5000	9240 459 17100	413673
14580	12	30	8	GU5.3	N.A.	11000	5000	9240 460 17100	413703
14581	12	30	24	GU5.3	N.A.	3350	5000	9240 461 17100	413758
14582	12	30	36	GU5.3	N.A.	1600	5000	9240 462 17100	413789
14583	12	30	60	GU5.3	N.A.	750	5000	9240 463 17100	413826
14584	12	35	8	GU5.3	FRB	14000	5000	9240 464 17100	413871
14585	12	35	24	GU5.3	FRA	4400	5000	9240 465 17100	413970
14586	12	35	36	GU5.3	FMW	2200	5000	9240 466 17100	424327
14587	12	35	60	GU5.3	-	1050	5000	9240 467 17100	424358
14588	12	45	8	GU5.3	EXT	16000	5000	9240 468 17100	424389
14589	12	45	24	GU5.3	EXZ	5450	5000	9240 469 17100	424419
14590	12	45	36	GU5.3	EXN	2850	5000	9240 470 17100	424440
14591	12	45	60	GU5.3	FNV	1300	5000	9240 471 17100	424471

PHILIPS

Polar intensity diagrams

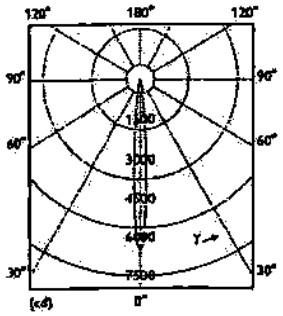

MASTERline ES 12V 20W 8dgr

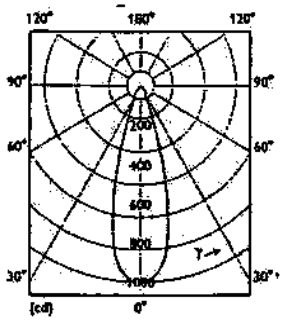

MASTERline ES 12V 20W 36dgr

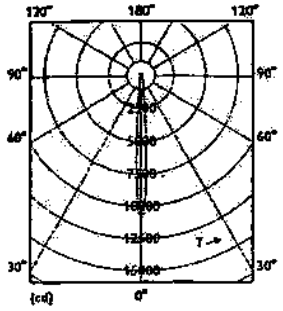

MASTERline ES 12V 30W 8dgr

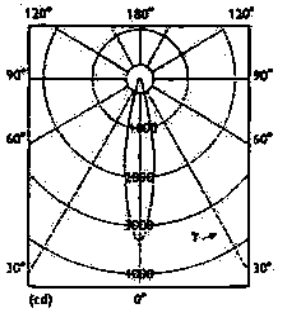

MASTERline ES 12V 30W 24dgr

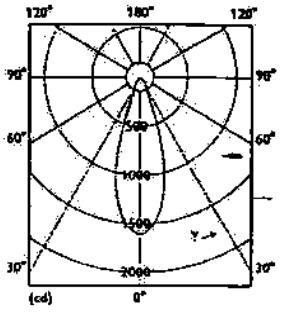

MASTERline ES 12V 30W 36dgr

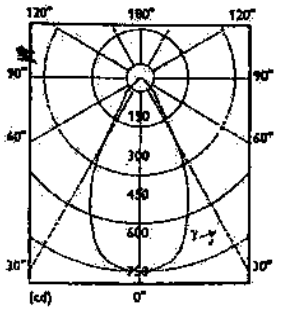

MASTERline ES 12V 30W 60dgr

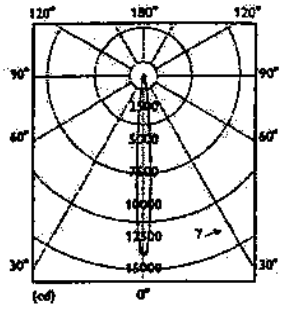

MASTERline ES 12V 35W 8dgr

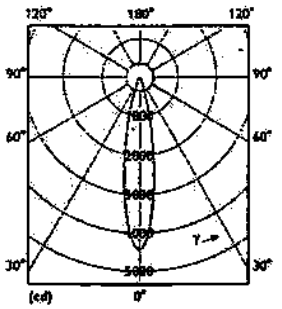

MASTERline ES 12V 35W 24dgr

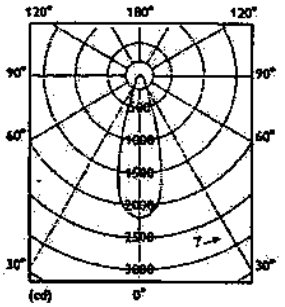

MASTERline ES 12V 35W 36dgr

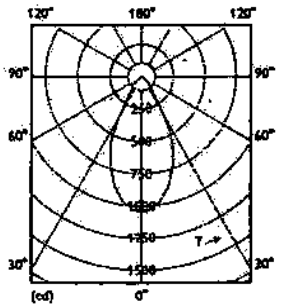

MASTERline ES 12V 35W 60dgr

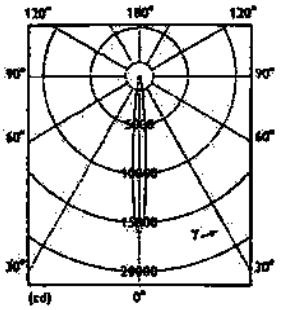

MASTERline ES 12V 45W 8dgr

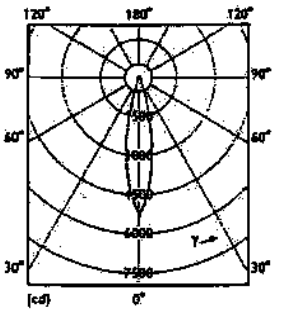

MASTERline ES 12V 45W 24dgr

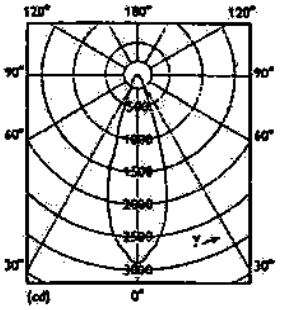

MASTERline ES 12V 45W 36dgr

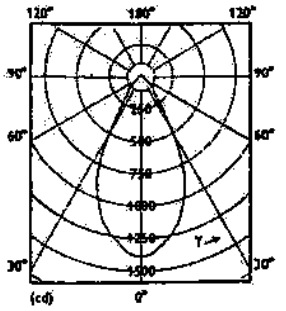

MASTERline ES 12V 45W 60dgr

MasterLine® ES IRC MRC-16 Lamps

Superior accent lighting with measurable energy savings

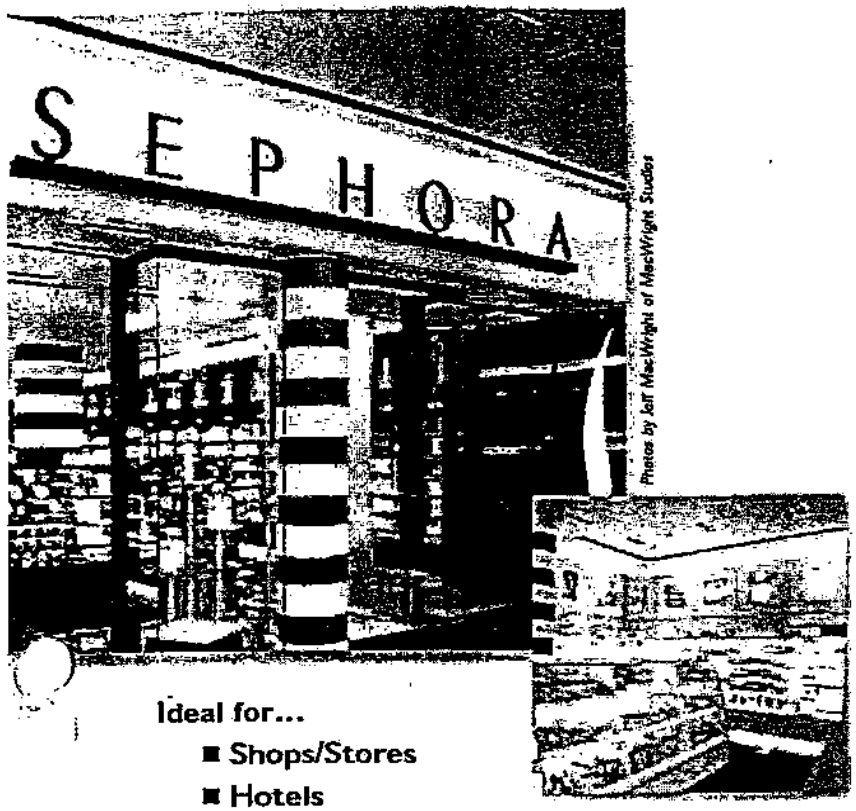

Photos by Jeff MacWright of MacWright Studios

Ideal for...

- Shops/Stores
- Hotels
- Restaurants
- Exhibition/Art Galleries
- Track and Recessed Fixtures

Innovation

MasterLine® ES features a double-ended IRC burner and hard-coat dichroic reflector

Energy Saver

- Up to 30% more energy efficient than standard MR-16s
- Save $7.50 per lamp when replacing standard MR-16s*

Superior Light Quality

- Features a smooth, round beam for effective accent lighting
- Color consistent white light
- Glass lens minimizes UV and product fading

Long Life

Lasts 5000 hours for lower maintenance costs

* Based on $.10/kw per hour for 5000 hours. 35W MasterLine ES replaces 50W standard MR-16.

Philips Lighting Company

PHILIPS

Let's make things better.

Philips Lighting Company
200 Franklin Square Drive • P.O. Box 6800
Somerset, NJ 08875-6800
1-800-555-0050
www.lighting.philips.com/nam
A Division of Philips Electronics North America Corporation
Printed in USA 8/01 P-5431-A

Philips Lighting
281 Hillmount Road
Markham, Ontario L6C 2S3
A Division of Philips Electronics Limited

MasterLine® ES IRC MRC-16 Lamps

Electrical, Technical and Ordering Data (Subject to change without notice)

Product Number 046677-	Ordering Code	Lamp Watts	Lamp Volts	Base	Approx. Color Temp. (Kelvin)	Avg. Center Candle Power	Approx. Beam Spread (Degrees)	Rated Average Life (Hrs.)	Replaces Standard MR-16
36345-7	20MRC16/IRC/SP8	20	12	GU 5.3	3100	6500	8	5000	20W or 35W
36346-5	20MRC16/IRC/FL36	20	12	GU 5.3	3100	1000	36	5000	20W or 35W
36348-1	35MRC16/IRC/SP8	35	12	GU 5.3	3100	14000	8	5000	50W
36349-9	35MRC16/IRC/NFL24	35	12	GU 5.3	3100	4400	24	5000	50W
36351-5	35MRC16/IRC/FL36	35	12	GU 5.3	3100	2200	36	5000	50W
36352-3	35MRC16/IRC/WFL60	35	12	GU 5.3	3100	1050	60	5000	50W
36353-1	45MRC16/IRC/SP8	45	12	GU 5.3	3100	16000	8	5000	50W or 75W
36355-6	45MRC16/IRC/NFL24	45	12	GU 5.3	3100	5450	24	5000	50W or 75W
36357-2	45MRC16/IRC/FL36	45	12	GU 5.3	3100	2850	36	5000	50W or 75W
36358-0	45MRC16/IRC/WFL60	45	12	GU 5.3	3100	1300	60	5000	50W or 75W

Light Distribution

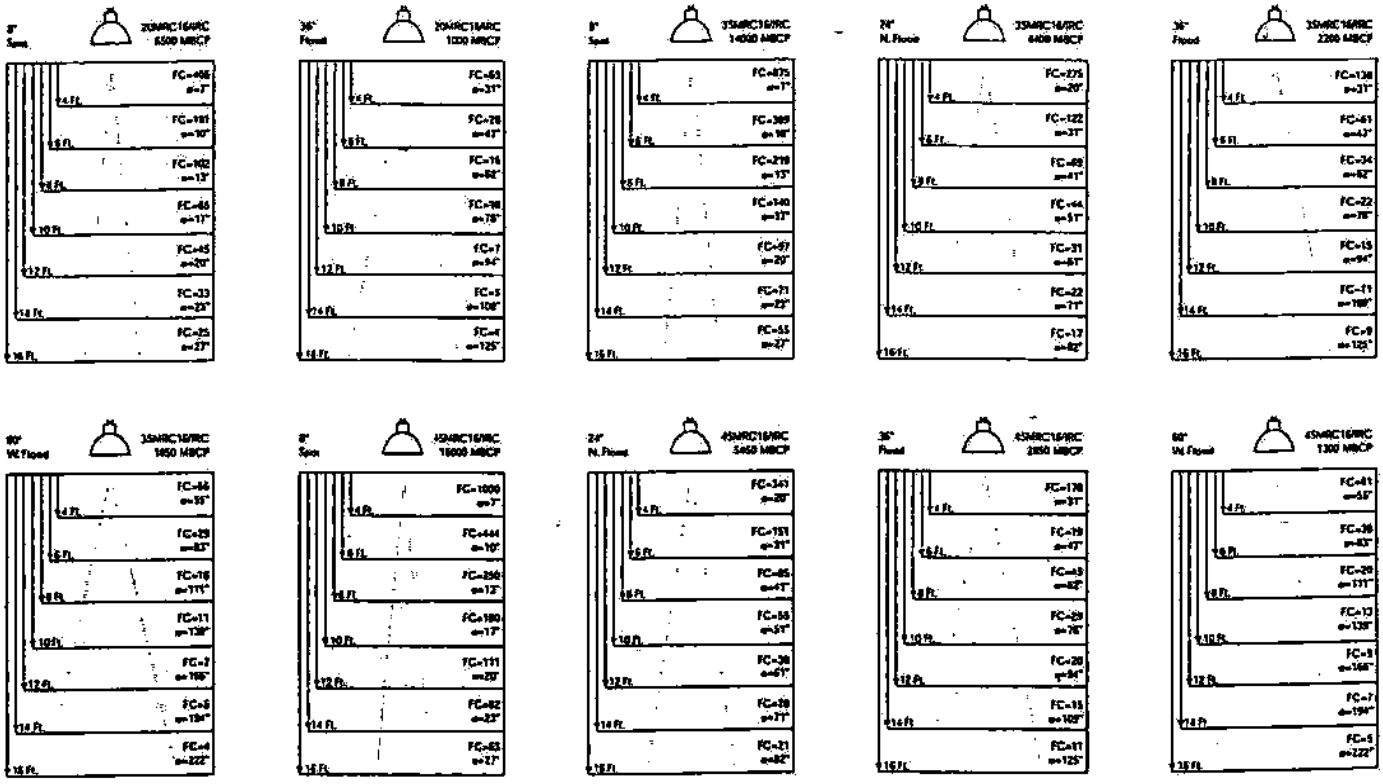

MBCP = Maximum Beam Candlepower
Ø = Diameter of beam spread in inches
FC = Footcandles measured at 0°

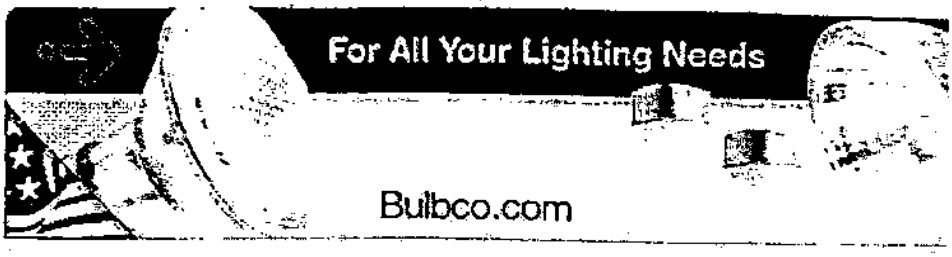

Bulbco.com

ORDER DIRECT
Energy Savers
Fluorescent
Full Spectrum
Halogens
HID. Lamps
Incandescent
Longlife Bulbs
Miniatures
Projector Lamps
Christmas Lights
Club & d.j. Lights
Gifts & Novelties
Neon Lights
New Fun Lights
Rope Lighting
Lighting Catalogs
Lighting Ballasts
Lighting Fixtures
Lighting Parts
Lighting Sale

ORDER DIRECT
Show Order
Search
Info
Privacy Policy
Index

Search

Search by keywords or description.
If you can't find it here try the side buttons.

Track Light Kits

MR16 Square Track
Click here for More.

Availability: Usually ships the same business day.

MR16 Square Track
310 **$75.00, 4/ $120.00**
Buy Now !

MR16 Roun
Click here fo

Availability: ships the sa business da

MR16 Roun
312 **$75.00, $130.00**
Buy Now !

MR16 Gimble Ring
Click here for More.

Availability: Usually ships the same business day.

MR16 Gimble Ring
314 Regular price: $85.00 Sale price: **$78.00, 2/$140.00**
Buy Now !

Par30 Gimb
Click here fo

Availability: ships the sa business da

Par30 Gimb
316 Regula $49.00 Sale **$45.00, 2/$8**
Buy Now !

R30 Straight Cylinder

R30 Step C
Click here fo

Email

Click here for More.

Availability: Usually ships the same business day.

R30 Straight Cylinder 318 $44.00, 4/$155.00

Buy Now !

Availability: ships the sa business da

R30 Step C 320 $45.00, $155.00

Buy Now !

R30 Bullet Cylinder

Click here for More.

Availability: Usually ships the same business day.

R30 Bullet Cylinder 322 $45.00, 4/ $155.00

Buy Now !

Email This Page To A Friend!

Please call us at (954) 360-0090 if you have any questions or con
Or email your inquiry to our customer service department.

Appliance | Energy savers | Fluorescent | Full spectrum | Halogen Incandescent | Long life bulbs | Miniatures | Stage,Studio | Projec | Black lights | Ballasts | Track lighting | Christmas lights | Dj lights Gift lights | Rope lights | Best buys

Privacy Policy | Terms of Use | © 2002 Light Bult Inc. All rights reserved.

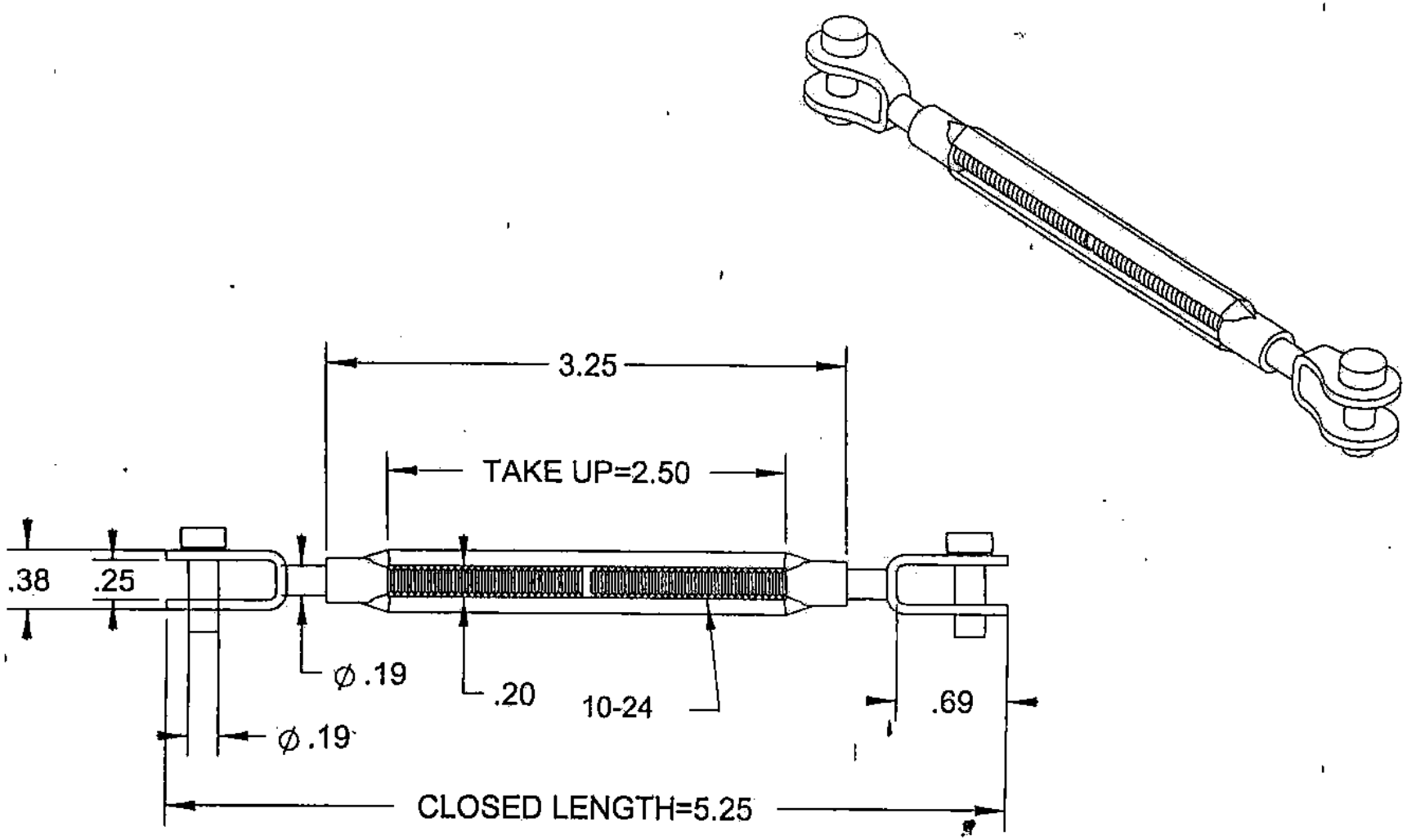

LENGTH TOLERANCE +/- .25

MATERIAL: Cast Type 316 Stainless Steel

WORKING LOAD LIMIT: 360 lbs.

OPEN LENGTH: (FULLY EXTENDED) 7.75

McMASTER-CARR SUPPLY COMPANY

DATE Nov 16 2001 | PAGE 1 OF 1

SCALE 0 0.5 1

UNLESS OTHERWISE SPECIFIED, DIMENSIONS ARE IN INCHES

PART NUMBER: 30315T61

TURNBUCKLE, JAW & JAW

http://www.mcmaster.com

(c) 2000 McMaster-Carr Supply Company

For information about turnbuckles, see page 1262.

Forged Steel Stub End Turnbuckles

The stub ends on these self-colored turnbuckles are easily welded into place or threaded. Take-up section of stub ends have Unified National Coarse threads. Complete turnbuckles consist of a turnbuckle body and stub-end fittings on each side. Meet Federal Specification FF-T-791b, Type I, Form I.

Also Available Stubs and jam nuts. For stubs, please ask for 2995T444 and specify thread size, take-up length, and left- or right-hand thread. For jam nuts, please ask for 2995T222 and specify thread size and left- or right-hand thread. Jam nuts are not available for 1¼"-7 or 1½"-6 thread sizes.

Complete Turnbuckle

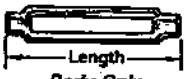

Body Only

Thread Size	Take-Up	Complete Turnbuckles: Closed Length	Work Load Limit, lbs.		Each 1-5	Each 6-Up	Turnbuckle Bodies: Length		Each 1-5	Each 6-Up
¼"-20	4"	10"	500	2996T14	$7.61	$6.78	4.81"	2995T14	$5.01	$4.35
5/16"-18	4.5"	11"	800	2996T15	9.37	8.34	5.56"	2995T15	6.72	5.83
⅜"-16	6"	16"	1,200	2996T16	9.94	8.85	7.13"	2995T16	7.03	6.11
½"-13	6"	16"	2,200	2996T17	11.24	10.01	7.5"	2995T17	7.33	6.44
½"-13	9"	19"	2,200	2996T18	15.37	13.70	10.5"	2995T18	11.64	10.12
½"-13	12"	22"	2,200	2996T19	19.71	17.56	13.5"	2995T19	13.54	11.78
⅝"-11	6"	16"	3,500	2996T21	13.93	12.41	7.88"	2995T21	9.08	7.97
⅝"-11	9"	19"	3,500	2996T22	19.99	18.17	10.88"	2995T22	13.98	12.16
⅝"-11	12"	22"	3,500	2996T23	22.81	20.74	13.88"	2995T23	16.01	13.91
¾"-10	6"	17"	5,200	2996T24	17.86	16.24	8.25"	2995T24	12.19	10.69
¾"-10	9"	20"	5,200	2996T25	22.97	20.88	11.25"	2995T25	14.56	12.77
¾"-10	12"	23"	5,200	2996T26	32.28	29.35	14.25"	2995T26	22.08	19.38
¾"-10	18"	29"	5,200	2996T47	47.73	43.39	20.25"	2995T47	33.16	29.09
⅞"-9	6"	18"	7,200	2996T28	23.80	21.63	8.63"	2995T28	15.46	13.57
⅞"-9	12"	24"	7,200	2996T29	41.46	37.69	14.63"	2995T29	25.32	22.02
⅞"-9	18"	30"	7,200	2996T51	71.62	65.11	20.63"	2995T51	34.29	30.59
1"-8	6"	19"	9,800	2996T321	29.57	26.88	9"	2995T321	18.61	16.04
1"-8	12"	25"	9,800	2996T331	44.64	40.58	15"	2995T331	21.14	18.86
1"-8	18"	31"	9,800	2996T52	70.81	64.37	21"	2995T52	38.24	34.29
1¼"-7	6"	20"	14,800	2996T371	47.59	43.27	9.75"	2995T371	24.21	21.48
1½"-6	6"	20.5"	21,000	2996T431	68.80	62.54	10.38"	2995T431	35.55	32.27

Forged Stainless Steel Turnbuckles

Type 316 stainless steel turnbuckles have Unified National Coarse threads. All eyes are oval unless noted. See page 1262 for dimensional drawings.

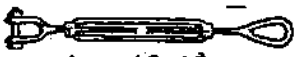

Jaw and Oval Eye

Stub and Stub

END FITTING SPECIFICATIONS

Thread Size	Work Load Limit, lbs.	Eye End A	Eye End B	Eye End C	Jaw End G	Jaw End H	Jaw End J	Jaw End K
¼"-20	500	1"♣	0.45"♣	0.9"	0.78"	0.45"	0.21"	1.06"
5/16"-18	800	1.13"♣	0.5"♣	1"	0.9"	0.5"	0.25"	1.19"
⅜"-16	1,200	1.25"	0.51"	1.02"	1.13"	0.56"	0.31"	1.41"
½"-13	2,200	1.71"	0.71"	1.42"	1.4"	0.63"	0.38"	1.75"
⅝"-11	3,500	1.94"	0.87"	1.74"	1.63"	0.82"	0.5"	2.31"
¾"-10	5,200	2.44"	0.98"	1.96"	1.94"	1"	0.63"	2.69"
1"-8	10,200	3.35"	1.35"	2.7"	2.5"	1.25"	0.78"	3.59"

♣ Round eye end fittings.

TURNBUCKLE BODIES

Thread Size	Length		Each★
¼"-20	4.75"	3022T11	$13.93
5/16"-18	5.44"	3022T12	18.33
⅜"-16	7.13"	3022T13	23.91
½"-13	7.5"	3022T14	30.74
⅝"-11	7.85"	3022T15	39.37
¾"-10	8.15"	3022T16	55.68
1"-8	9"	3022T18	81.27

Thread Size	Take-Up	Eye & Eye: Closed Length		Each★	Jaw & Jaw: Closed Length		Each★	Jaw & Eye: Closed Length		Each★	Stub & Stub: Closed Length		Each★
¼"-20	4"	8"	3022T31♣	$38.91	7.5"	3022T51	$51.74	8"	3022T41♥	$44.77	9"	3022T21	$30.65
5/16"-18	4.5"	9.75"	3022T32♣	47.63	9.2"	3022T52	60.57	9.4"	3022T42♥	54.76	10.5"	3022T22	37.11
⅜"-16	6"	12.4"	3022T33	55.48	11.5"	3022T53	69.38	12.1"	3022T43	63.22	15"	3022T23	42.63
½"-13	6"	14.4"	3022T34	75.50	13.25"	3022T54	86.28	13.75"	3022T44	81.87	15"	3022T24	55.33
⅝"-11	6"	15.6"	3022T35	99.93	14.5"	3022T55	134.27	15.2"	3022T45	122.53	16"	3022T25	70.39
¾"-10	6"	17.5"	3022T36	126.02	16.75"	3022T56	177.30	17"	3022T46	146.73	16.5"	3022T26	85.04
1"-8	6"	21"	3022T38	241.74	20.1"	3022T58	343.44				18.75"	3022T28	162.47

♣ Round eye end fittings. ♥ Jaw and round eye end fittings.

Cast Stainless Steel Turnbuckles

Cast Type 316 stainless steel construction gives you strength and corrosion resistance at an economical price. All eyes are round. See page 1262 for dimensional drawings.

Jaw & Jaw Turnbuckles— Furnished with two removable pins and circle cotters for easy connection to most anchoring eyes and eye bolts.

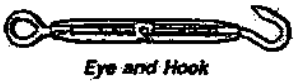

Eye and Hook

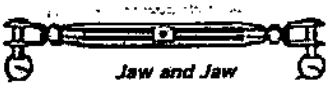

Jaw and Jaw

END FITTING SPECIFICATIONS

Thread Size	Work Load Limit, lbs.♠	Work Load Limit, lbs.▲	Eye End A	Eye End B	Hook End D	Hook End E	Hook End F	Jaw End G	Jaw End H	Jaw End J	Jaw End K
10-24	330	45	0.69"	0.31"	0.69"	0.31"	0.28"	0.38"	0.25"	0.19"	0.69"
¼"-20	440	100	0.88"	0.38"	0.88"	0.41"	0.38"	0.5"	0.31"	0.25"	0.75"
5/16"-18	840	250	1.06"	0.44"	1.06"	0.47"	0.44"	0.59"	0.38"	0.31"	0.94"
⅜"-16	1260	450	1.38"	0.63"	1.38"	0.53"	0.5"	0.75"	0.44"	0.38"	1.06"
½"-13	2200	850	1.63"	0.63"	1.63"	0.66"	0.63"	0.81"	0.5"	0.5"	1.56"
⅝"-11	2800	1650	1.88"	0.63"	1.88"	0.66"	0.63"	1.06"	0.69"	0.63"	2"

♠ Eye & eye and jaw & jaw. ▲ Eye & hook and hook & hook.

Thread Size	Take-Up	Eye & Eye: Closed Length		Each★	Eye & Hook: Closed Length		Each★	Hook & Hook: Closed Length		Each★	Jaw & Jaw: Closed Length		Each★
10-24	2.5"	5.25"	30315T51	$10.70	5.25"	30315T21	$10.70	5.25"	30315T31	$10.70	5.25"	30315T61	$10.82
¼"-20	3"	6.5"	30315T52	12.20	6.5"	30315T22	12.20	6.5"	30315T32	12.20	6.5"	30315T62	14.98
5/16"-18	4"	8"	30315T53	16.93	8"	30315T23	16.93	8"	30315T33	16.93	8"	30315T63	19.42
⅜"-16	6"	11"	30315T54	23.83	11"	30315T24	23.83	11"	30315T34	23.83	11"	30315T64	28.35
½"-13	6"	12"	30315T15	37.80	12"	30315T25	37.80	12"	30315T35	37.80	12"	30315T45	38.53
⅝"-11	8"	15.5"	30315T56	68.63	15.5"	30315T26	68.63	15.5"	30315T36	68.63	16"	30315T66	86.18

★ Prices are approximately 10% lower when you buy quantities of 6 or more.

Warning! Never exceed work load limits of items on this page.

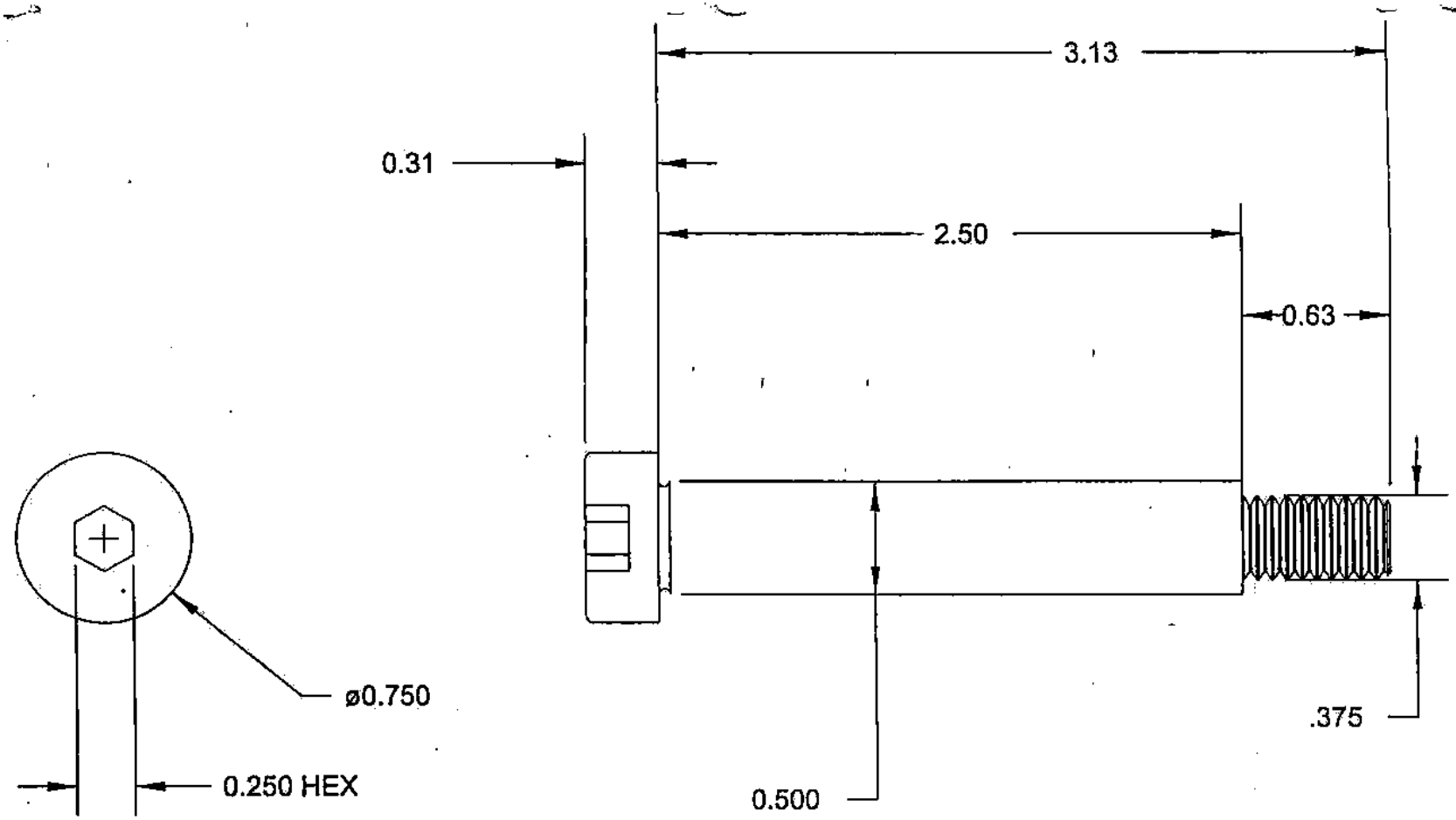

McMASTER-CARR
SUPPLY COMPANY

DATE JUNE 1999	PAGE 1 OF 1
SCALE 1=.71	

UNLESS OTHERWISE SPECIFIED,
DIMENSIONS ARE IN INCHES

PART NUMBER 90298A722

18-8 Stainless Steel Standard Shoulder Screw 1/2"Shoulder Dia, 2-1/2"Shoulder Lg,3/8"-16 Thread

http://www.mcmaster.com

(c) 1999 McMaster-Carr Supply Company

We would love to hear your comments.

Screw Type > Shoulder Diameter > Shoulder Length > Material

Shoulder Screws

1 item matches all of your specifications.

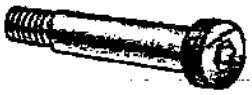

Part Number 90298A722

1-4 Each $6.29 Each
5 or more $5.32 Each

System of Measurement:	Inch	
Screw Type:	Standard	
Drive:	Socket	
Material:	18-8 Stainless Steel	Select to change value
Thread Size:	3/8"-16	
Shoulder Diameter:	1/2"	
Shoulder Length:	2-1/2"	Select to change value

To Order this item, enter a quantity and click on the "Add to Order" button.

View this item on its catalog page.

View a technical drawing of this item.

View a 3-D Model of this item.

To change any other features, please start your search again.

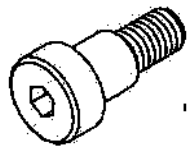

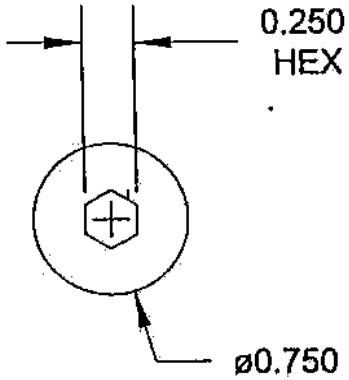

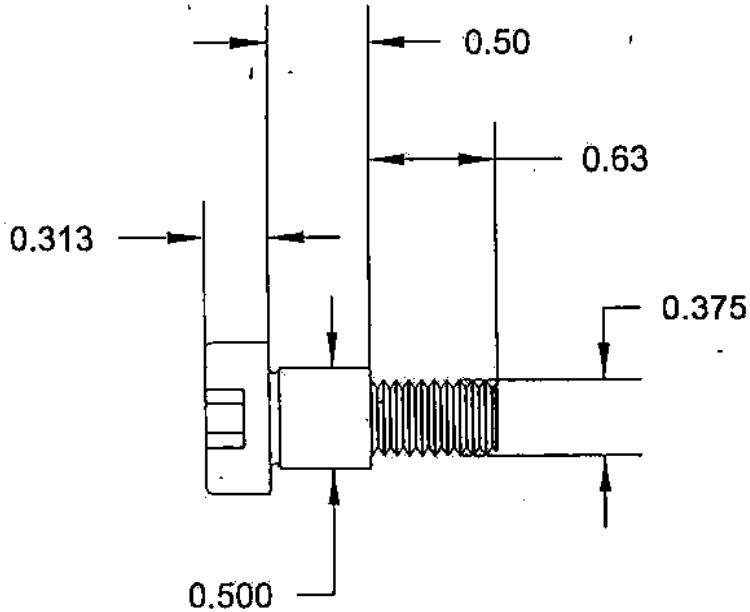

McMASTER-CARR
SUPPLY COMPANY

DATE JANUARY 2001	PAGE 1 OF 1
SCALE 0.0 0.5 1.0	
UNLESS OTHERWISE SPECIFIED, DIMENSIONS ARE IN INCHES	

PART NUMBER 97345A700

316 STAINLESS STEEL STANDARD SHOULDER
SCREW 1/2 SHOULDER DIA 1/2 SHOULDER
LG 3/8 -16 THREAD

http://www.mcmaster.com
(c) 2001 McMaster-Carr Supply Company

Surface-Mounted Draw Latches

For information about draw latches, see page 2762; for information about keying, see page 2730.

Additional Information *Click here for mounting plate dimensions for the latches on this page.*

Work-Load Rated Draw Latches

Work-load rated to secure enclosures, containers, and cases. Some of these latches also offer a longer reach than standard draw latches. Mounting screws not included.

Choose *stainless steel, EPDM rubber,* or *urethane rubber* latches for corrosion resistance. *EPDM rubber* latches also absorb vibration and compensate for slight misalignment. Temperature range is −65° to +302° F.

Work load limit is the maximum amount of force the latch can withstand without affecting its operation or appearance.

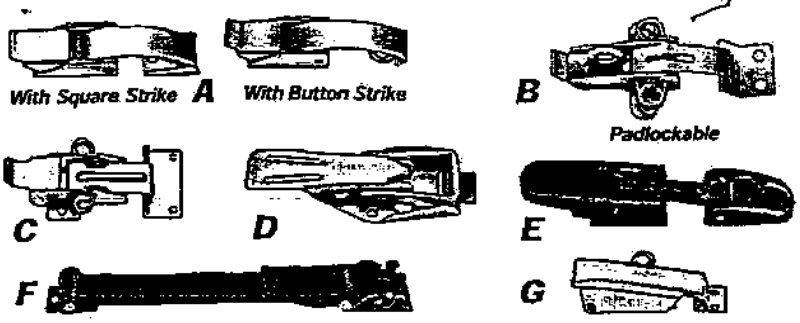

	Reach Distance	Overall Size★ Lg.	Wd.	Proj.	Work Load Limit, lbs.	Screw Size	Max. Padlock Shackle Dia.	Finish	With Square Strike Each		With Button Strike Each	
Nonlocking—Steel												
A	1 3/16"	1 3/4"	1/2"	5/16"	85	#4	—	Zinc Plated	1844A51	$3.79	1844A41	$3.79
A	1 11/16"	3 5/32"	51/64"	9/16"	200	#8	—	Zinc Plated	1844A52	5.17	1844A42	5.17
A	2 1/4"	4 1/2"	1 3/16"	23/32"	200	#10	—	Matte Black	1844A63	12.76	1844A61	12.19
B	1 1/2"	4 5/64"	1 7/8"	37/64"	400	#12 (strike), #5 (latch)	—	Zinc Plated	1863A16	4.17	—	—
C	2 1/16"	3 13/32"	2 1/16"	25/32"	400	#8	—	Zinc Plated	1501A32	5.32	—	—
Nonlocking—Type 304 Stainless Steel												
A	1 3/16"	1 3/4"	1/2"	5/16"	85	#4	—	Bright	1844A31•	7.10	1844A21•	7.21
A	1 11/16"	3 5/32"	57/64"	9/16"	200	#8	—	Bright	1844A32•	10.21	1844A22•	10.21
B	1 1/2"	4 5/64"	1 7/8"	37/64"	380	#5 (strike), #12 (latch)	—	Bright	1863A17	8.41	—	—
C	2 1/16"	3 13/32"	2 1/16"	25/32"	380	#8	—	Bright	1501A34	9.62	—	—
Nonlocking—EPDM Rubber												
E	3 1/16"	10"	1 57/64"	17/32"	25	#10	—	Black	4015A24	22.13	—	—
E	7 1/16"	15"	1 57/64"	17/32"	43	#10	—	Black	4015A27	26.90	—	—
Nonlocking—Urethane Rubber												
F	7 3/4"	14 9/32"	1 7/8"	15/32"	500	#10	—	Black	4015A28	38.93	—	—
F	7 3/4"	14 9/32"	1 7/8"	15/32"	500	#10	—	Black	4015A29♠	50.73	—	—
Padlockable—Steel												
A	1 13/16"	3 5/32"	57/64"	61/64"	285	#8	21/64"	Zinc Plated	1844A53	5.17	1844A43	5.17
A	2 1/4"	4 1/2"	1 3/16"	1 1/8"	200	#10	13/32"	Matte Black	1844A64	12.76	1844A62	12.19
D	2 15/16"	8 1/2"	3 1/2"	1"	1650	3/8" (latch)■	5/16"	Zinc Plated	12685A61	29.96	—	—
Padlockable—Type 304 Stainless Steel												
A	1 11/16"	3 5/32"	57/64"	61/64"	200	#8	21/64"	Bright	1844A33	10.21	1844A23	10.21
B	1 1/2"	4 5/64"	1 7/8"	7/8"	380	#12	3/8"	Bright	1863A31	9.49	—	—
Padlockable—Type 316 Stainless Steel												
G	11/16"	2 31/64"	55/64"	5 3/64"	110	#5	3/16"	Polished	1863A82	7.56	—	—

★ Overall length includes strike. • Blade is 17-7 PH stainless steel.
♠ Mounting plate, lever handle, and keeper are Type 302 stainless steel. ■ Strike has no screw holes; designed for welding.

Compression Spring Draw Latches

When fully closed, the springs provide constant holding tension for a tight latch. The springs begin compressing when the latch first engages the strike and continue compressing as the latch closes. Screws are not included.

Work load limit is the maximum amount of force the latch can withstand without affecting its operation or appearance.

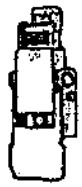
H

J

K

	Reach Distance	Overall Size★ Lg.	Wd.	Proj.	Work Load Limit, lbs.	Screw Size	Max. Padlock Shackle Dia.	Finish		Each
Internal Spring										
Nonlocking—Steel										
H	1 3/8"	2 39/64"	1 1/8"	13/32"	—	#6	—	Zinc Plated	1794A41	$5.01
Nonlocking—Type 304 Stainless Steel										
H	7/16"	1 13/32"	17/32"	15/64"	—	#2	—	Bright	1794A51	5.76
H	1 3/8"	2 39/64"	1 1/8"	13/32"	—	#6	—	Bright	1794A43	5.05
J	1 3/8"	2 51/64"	1 1/8"	37/64"	250	#6	—	Bright	1794A55♣	12.14
Padlockable—Type 304 Stainless Steel										
J	1 3/8"	2 51/64"	1 1/8"	29/32"	250	#6	21/64"	Bright	1794A54♣	7.39
External Spring										
Nonlocking—Steel										
K	1"	2 13/64"	1 3/8"	29/64"	—	■	—	Plain	1734A14	4.40
K	1 1/8"	2 13/32"	1 3/8"	29/64"	—	#7 (latch), #6 (strike)	—	Zinc Plated	1734A12	3.74
K	1 1/4"	3 1/2"	1 53/64"	37/64"	—	#12 (latch), #10 (strike)	—	Zinc Plated	1734A26	7.89
Nonlocking—Type 304 Stainless Steel										
K	1 1/4"	3 1/2"	1 53/64"	37/64"	—	#12 (latch), #10 (strike)	—	Bright	1734A13	13.31
K	7/8"	2 1/4"	1 7/16"	1/2"	—	#5	—	Satin	1734A27	6.44
Padlockable—Steel										
K	1 1/16"	2 31/32"	1 3/8"	51/64"	—	#7 (latch), #6 (strike)	5/16"	Zinc Plated	1734A11	4.99
K	1 3/16"	3 37/64"	1 13/16"	59/64"	—	#12 (latch), #10 (strike)	3/8"	Zinc Plated	1734A15	8.77

★ O'all lg. includes strike. ♣ Has secondary latch to help prevent accidental opening. ■ No screw holes; designed for welding.

Ejector Lever Draw Latches

Not only does this latch pull the door and frame together for a secure hold, but when you unlatch, it actually pushes the door out for easy opening. Perfect for panels and electrical enclosures. Push down on the lever to latch; pull up to unlatch.

Latches are through-hole mount, designed to latch surfaces that are at 90° angles. Made of black polyester with zinc-plated steel pawl. Temp. range is 14° to 104° F. Size is 2 1/8" Lg. × 43/64" Wd. × 63/64" Proj. Requires 13/32" Lg. × 5/8" Wd. mounting hole.

Work load limit is the maximum amount of force the latch can withstand without affecting its operation or appearance.

Max. Door Thick.	Reach Distance	Work Load Limit		Each
1/32"-1/16"	1/2"	100 lbs.	1405A1	$7.67
1/16"-3/32"	1/2"	100 lbs.	1405A2	7.67
1/32"-1/8"	1/2"	100 lbs.	1405A3	7.67

Appendix D

Parts Tree List

Light bar assembly

Subtitle

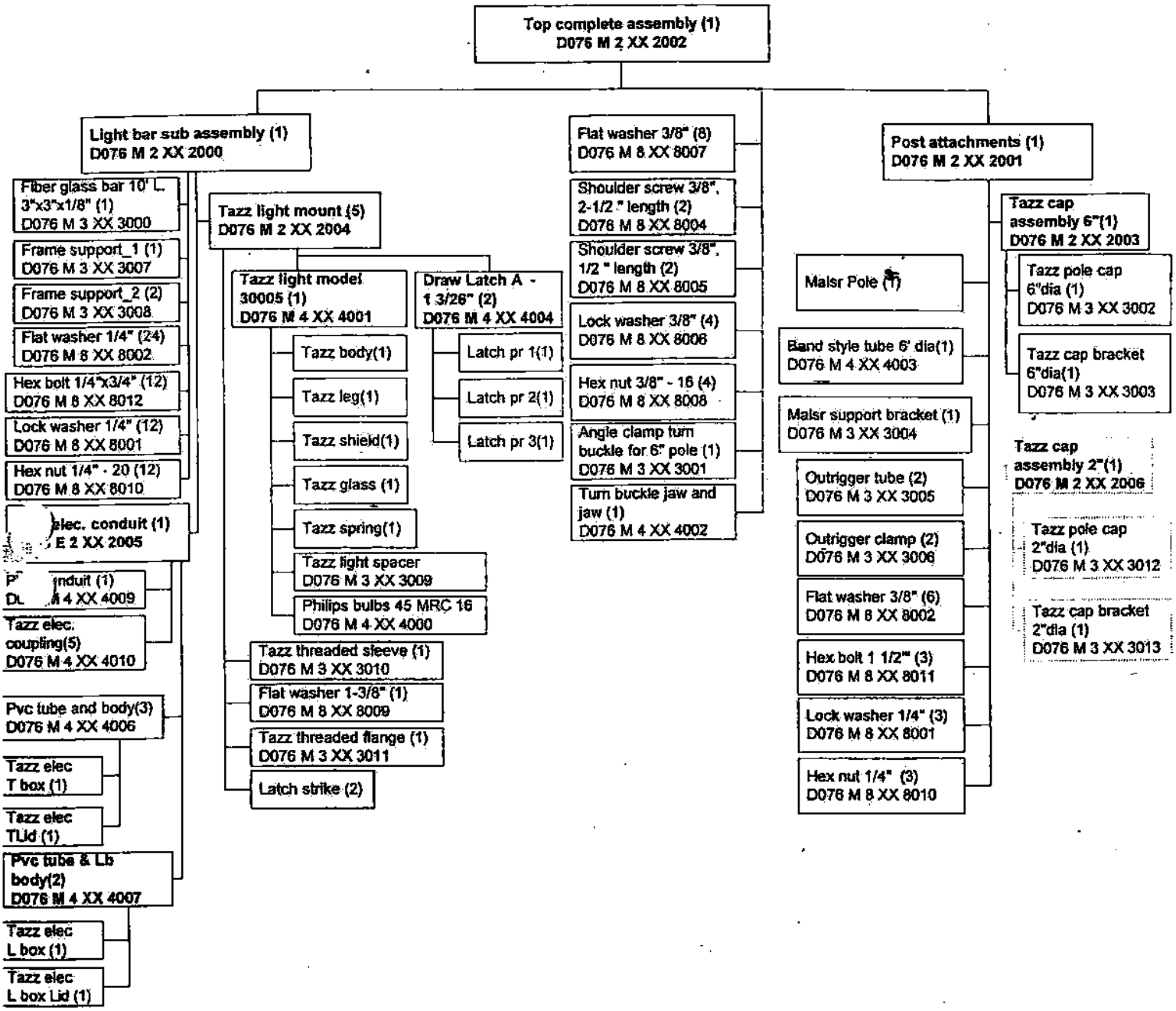

Title: Light bar assembly Tree structure		Revisions		
		No.	Date	Description
Date Original 4/28/2002	Scale N/A			
Latest revision 01	Job No.	CHECKED BY J.Laffitte	DRAWN BY M.Morales	HCET Hemispheric Center for Environmental Technology

Appendix E

Design Criteria

November 23, 1999

Revised on 5/10/2002

Design Goals for Halogen Lightbar Assembly

The purpose of this document is to outline the requirements necessary for the design of a low cost Halogen Lightbar assembly.

1. Mechanical Goals

- Reference is made to applicable portions of FAA-E-2325d.
- Weight - shall not exceed 22 lb. including five lamps and two outriggers.
- Size - shall be 10' long, supported at the center by two outriggers for stability.
- Color of the assembly shall be Aviation Orange. Color shall be permanent and non-fading.
- The mounting hardware of the assembly shall accommodate either round or square poles and should resist turning due to wind forces. _
- Temperature: -55°C to +70°C operating (this includes direct sunshine)
- Altitude: 10,000 ft. Max.
- Rugged construction is imperative.
- Vibration – Must be capable of sustaining vibration caused by airfield winds and those caused by jet-blasts. Winds up to 120 mph shall not cause damage.
- Protection against snow accumulation and ice formation that might obstruct or diminish light output needs to be addressed.
- Preferred materials - Non Metallic (RADAR reflection).
- Halogen lamps have a protective cover, which may be sufficient protection against the elements.

2. Accessibility:

- Each lamp shall be easily replaceable without affecting its alignment in the assembly. Replacement of the lamp shall be effortless and shall be accomplished without the removal of screws or other hardware. Captive latches or other means shall be used. Screws shall not be used, due to poor accessibility with ice and snow. Captive latches, if used, shall not become inoperative due to weather conditions such as ice and snow.

3. **Aiming:**

- The lightbar shall have provision for adjustment of the aiming-angle in increments of 1° or less. Total adjustment range shall be 0° to +25° above horizontal. Final setting shall be stable and non-creeping due to aging and temperature changes. Continuous adjustment is acceptable. An angle indicator is required and must be permanently marked. Adjustment shall be implemented without the use of additional aiming devices.

4. **Companion Transformer:**

A low voltage transformer is required at every lightbar to provide the operating voltage for the Halogen lights.

This 10:1 voltage-transformer converts the incoming 120, 75 and 50-Volt potentials to 12, 7.5 and 5.0 Volts respectively.

The transformer shall be located at the center of the lightbar for short distribution of heavier gage wires. Due to weight constraints, the transformer may be alternately located at the base of the lightbar pole (not desirable), in a NEMA housing above the frangible coupling. The housing shall be part of the pole and shall have a hinged access door that can accommodate a lock.

Two wires shall be provided from the transformer housing to the lightbar to power the five lamps. Lightning arresters shall be housed within the transformer housing. Input and output connections on the transformer shall be block terminals. This will alleviate the need for additional terminal blocks for interconnections. Additional terminals shall be provided to accommodate two lightning arresters.

5. **Lamp monitoring assembly**

- A small torroidal transformer will be included with each lamp's wiring. This transformer will sense the presence of current flow in the lamps and provide direct indication of the lamps integrity. One wire will be common with each monitoring transformer. The second wires (one from each monitoring transformer) will be terminated on a small terminal block for connection to the monitoring station (1 + 5).

6. **Electrical Requirements**
   - Transformer Input Voltage: 120, 75 50 VAC / 50/60 Hz.
   - Input Power: 280 Watts Max.
   - Halogen Lamp Input Voltage: 12, 7.5 5.0 VAC / 50/60 Hz.

7. **Halogen Lamp:**
   - The selected lamp shall be Philips 45MRC16/IRC/SP8 (8°), or equivalent.

8. **Optional Application**
   - Lightbars may be used for 'Threshold' applications. 15 lightbars across a 150 ft wide runway will provide the required intensity.

     For this application a green filter is required. Provision shall be made to accommodate such filter in front of each lamp.

HCET Hemispheric Center for Environmental Technology
environment • energy • information technology

Supplemental Report
Halogen Light Bar

Prepared for

DME Corp.

Prepared by

Engineering and Technology Program
Hemispheric Center for Environmental Technology
Florida International University

July 10, 2002

On April 29, 2002, HCET authored a report for DME entitled: "Mechanical Design/Analysis Halogen Light Bar". As a supplement to that report, HCET offers this report, which covers some of the items discussed during the design review held at DME on May 15, 2002, and in separate meetings at DME on May 22, 2002 and June 6, 2002.

1.0 Issues

The following items had issues associated with them:

1) Details for mounting the turnbuckle that adjusts the angle of the Halogen Light Bar (HLB)
2) Details for mounting the transformer box
3) Details for the cap showing the wiring to the HLB
4) Details for the angle measurement marking
5) Electrical schematic for wiring of the lights
6) Maximum allowable weight of the bar
7) Name on the drawings should not reflect the name "Tazz"
8) Ice loading of the HLB. Reference was made to RTCA 160.

All of these items and/or changes are depicted in the drawings (size C) that accompany this report. All items except #6 (DME action) and #5 and #8 (HCET actions) were provided in size A paper on June 19, 2002. Item 6, "Maximum weight of the bar", was addressed by DME by obtaining the weights of the existing light units, which is 52 lbs. The ice loading issue of Item #8 was addressed during the design review; however, HCET obtained a copy of RTCA/DO-160D document to determine the ice loading. This document does not indicate the thickness of the ice but rather indicates that a layer of hard ice should be "to a thickness defined by the APPLICABLE EQUIPMENT PERFORMANCE STANDARD..." The document indicates that the applicable equipment performance standard can be the manufacturer's equipment specification. At this point, HCET holds that the structural loading due to a 1.5 inch thick layer of ice throughout the entire bar (equivalent to the ice that fits the interior volume of the bar) is within the capabilities of the light bar.

During the June 19, 2002 meeting, components from an existing light bar were shown to HCET personnel to determine whether they could be adapted to the design. The components were adaptable and DME took the task of incorporating these components into the design.

2.0 Revisions

In the June 19, 2002 drawings, slight revisions/modifications were made on the following objects:

1) Fiberglass light bar: thickness changed to 0.25 inch from 0.125 inch
2) Fiberglass light bar: hole size for the lamp slightly increased and shape slightly changed
3) Pole mounting cap has hole for wiring

The thickness to the light bar was changed due to an allowed increase in the weight of the unit. The hole for the lamps then changed because of the fiberglass wall-thickness change.

The recommended material for the fiberglass is an epoxy resin fiberglass or other fiberglass resin which maintains an ultimate strength of at least 25 ksi at high temperatures (120°C).

3.0 Ramifications of Revisions

The thickness increase of the light bar has several ramifications: the weight of the HLB is increased by 6 lbs, the safety factor of the design is increased, and the natural frequencies of vibration also increased (the structure is stiffer). An additional benefit of changing the thickness of the fiberglass bar is that 3-inch square fiberglass tubing, becomes a standard size for most fiberglass manufacturers at 1/4-inch thickness while 1/8-inch thickness is typically a non-stock item.

Creative Pultrusions, Inc., provided material specification for an epoxy-resin fiberglass coupon of triaxial fiberglass (90°, ±45°, 46 oz/sq yd fabric). An analysis was performed by modeling the fiberglass as a transversely isotropic material with the following specifications:

Parameter	Value
Density	0.07 lb/cubic inch
Elastic Modulus (Lengthwise)	3.92 Msi
Elastic Modulus (Crosswise)	2.26 Msi
Poisson ratio (Lengthwise)	0.35
Poisson ratio (Crosswise)	0.15
Shear Modulus	0.42 Msi

The same estimated wind load of the previous report was used (148 lb in the front surface of the bar and 64 lb in the rear surface). For these parameters, the maximum displacement due to the estimated drag force of a 120 mph wind is approximately 1 inch. The most critical stress occurs in the center of the light bar, at the top and bottom of the center lamp hole. At this location, we have a high stress of 10 ksi and a high heat load due to the center lamp. The temperature at that location could theoretically reach near 120°C when the outside temperature is 70°C. In practice, one would not encounter that situation of maximum drag load and maximum temperature load due to the cooling effect generated by the wind producing the drag load. Moreover, the lamp hole shape has a small cut out to avoid direct contact of the halogen lamp with the fiberglass at the maximum stress location, thus decreasing the temperature effect. The epoxy resin fiberglass used for the light bar should have an ultimate strength of 25 ksi at 120°C for a 2.5 factor of safety.

New vibration modes and natural frequencies were calculated for the thicker fiberglass beam. For the bar without outriggers, there were several low natural frequencies near 14

Hz. These included flapping of the arms symmetrically back and forth or up and down and anti-symmetric flapping where the left side moves forward while the right side moves backwards.

For the bar with the outriggers, the model was constrained so that it could not move vertically at the outrigger mounting points. This resulted in the following modes and natural frequencies: 15 Hz, front to back anti-symmetric flapping; 17 Hz, symmetrical flapping front to back; and 70 Hz, up-down S-shaped mode with fixed nodes at the outrigger mounting points.