FAA-C-1391b
January 25, 1991
SUPERSEDING
FAA-C-1391a, 12/04/73

U. S. Department of Transportation

Federal Aviation Administration

Specification

INSTALLATION AND SPLICING OF UNDERGROUND CABLES

FAA-C-1391b
January 25, 1991
SUPERSEDING
FAA-C-1391a, 12/04/73

FAA-C-1391b
January 25, 1991
SUPERSEDING
FAA-C-1391a, 12/04/73

CONTENTS

1. SCOPE 1

2. APPLICABLE DOCUMENTS 1
2.1 Federal specification 1
2.1.2 Military specifications 1
2.1.3 Federal Aviation Administration specifications 1
2.1.4 National Electrical Manufacturers Association (NEMA) standards 2
2.1.5 Underwriters' Laboratories (UL), Inc. standards . . . 2

3. REQUIREMENTS 2
3.1 Materials and workmanship 2
3.1.1 Government-furnished cable 3
3.1.2 Contractor-furnished cable 3
3.1.3 Workmanship 4
3.2 Trenching 4
3.2.1 Precautions 4
3.2.2 Excavations 4
3.2.2.1 Rock 5
3.2.2.2 Cable location and depth requirements 5
3.2.3 Backfilling 5
3.2.3.1 Underground Cable 5
3.2.4 Restoration 6
3.3 Installation of underground ducts 6
3.3.1 General 6
3.3.1.1 Conduit burial 6
3.3.1.2 Duct size, material, and installation 6
3.3.1.3 Access penetrations 6
3.3.1.4 Mandrel requirements 6
3.3.1.5 Spare ducts 6
3.3.1.6 Duct protection 7
3.3.2 Ducts encased in concrete 7
3.3.3 Ducts without concrete encasement 7
3.4 Installation of cables 7
3.4.1 Direct earth burial 8
3.4.1.1 Separation between direct earth burial cables 8
3.4.1.2 Cable slack loop, direct earth burial 8
3.4.2 Cable installation in duct 8
3.4.2.1 Cable pulling 9
3.4.2.2 Separation of cables installed in conduit or duct 9
3.4.3 Cable installation in manholes 11
3.4.3.1 Separation of cables in manholes 11
3.4.3.2 Cable racking 11
3.4.4 Cable terminations 11

3.4.5 Cable grounding 12
3.4.6 Cable guard wires 12

CONTENTS (continued)

3.5 Cable marking 13
3.5.1 Cable tagging 13
3.5.2 Cable markers 13
3.6 Cable Splicing 14

4. QUALITY ASSURANCE PROVISIONS 16
4.1 Cable testing 16
4.2 Power cables, 5,000 volts 17
4.2.1 Power cables, above 5,000 volts 17
4.3 Cables, 5,000 volts, series lighting 17
4.4 Power cables, 600 volts and below 18
4.5 Control and telephone cables 18
4.5.1 Acceptable conductors 18
4.5.2 Cable testing 18
4.6 Coaxial cables 19
4.6.1 Testing after installation 19
4.6.2 Pulse reflection test 19
4.6.3 Electrical test 19
4.7 Failure of cable under test 19

5. PREPARATION FOR DELIVERY 19

6. NOTES 20
6.1 General 20
6.2 Conflicts between documents 20

APPENDIX A, SPLICING ARMORED COAXIAL CABLE 21

TABLES

Table I. Maximum Allowable Non-Armored Cable Pull Using Dynamometer or Rope 10

Table II. Cable Splicing Specification Equivalents 16

Table III. Control and Telephone Cable Conductors 18

ILLUSTRATIONS

Figure 1. Typical Cable Tag 13

Figure 2. Typical Cable Run Marker 14

1. SCOPE.- This specification covers minimum requirements for installation of electrical cables buried directly in the earth or installed in underground duct or conduit. It includes trenching, installation, splicing or other joining of cables, and testing of cables for acceptability.

2. APPLICABLE DOCUMENTS.- Current issues of the following documents in effect on the date of the invitation-for-bids or request-for-proposals form a part of this specification, and are applicable to the extent specified herein.

2.1 Federal specification

WW-C-581 Galvanized Steel Conduit

(To obtain copies of federal specifications, contact General Services Administration offices in Washington DC, Atlanta, Boston, Chicago, Dallas, Denver, Kansas City MO, Los Angeles, New York, San Francisco, and Seattle.)

2.1.2 Military specifications

MIL-I-3825 Insulating Tape, Self-Fusing

MIL-C-38359 Cable, Power, Electrical, Airport Lighting

(Single copies of military specifications, standards, and handbooks may be requested by mail or telephone from Naval Forms and Publications Center, 5801 Tabor Ave., Philadelphia PA 19120. Not more than five items may be ordered on a single request; the invitation-for-bid or contract number should be cited where applicable. Only latest revisions [complete with latest amendments] are available; slash sheets must be individually requested. Request all items by document number. For information on subscription service, direct inquiries to the above address with additional marking, "ATTN: CODE 56.")

2.1.3 Federal Aviation Administration specifications

L-823 Plug and Receptacles, Cable Connectors

L-824 Underground Electrical Cables for Airport Lightning Circuits

FAA-E-2793 Cable, Electrical Power, 500 to 25,000 Volts

FAA-E-2013 Cable, Electrical Power, 600 to 15,000 Volts

FAA-E-2042 Cable, Electrical Control, Exterior

FAA-E-2072 Cable, Telephone, Exterior

FAA-E-2171 Cable, Coaxial, Armored, M17/6-RG11

FAA-E-2271 Cable, Coaxial, 50-Ohm, Foam Dielectric, 1/2 and 7/8 Inch

FAA-E-2524 Cable, Radio Frequency, Foam Dielectric, 1/2 and 7/8 Inch, Corrugated Type

FAA-E-2619 Cable, Coaxial, RG-35/U, Armored

(Copies of FAA specifications may be obtained from the Contracting Officer in the office issuing the invitation-for-bids or request-for-proposals. Requests should fully identify material desired, i.e., specification, standard, amendment, drawing numbers, and dates. Requests should cite the invitation-for-bids, request-for-proposals, contract involved, or other use to be made of the requested material.)

2.1.4 National Electrical Manufacturers Association (NEMA) standards

TC 6 Plastic Utilities Duct for Underground Installation.

(For copies of NEMA Standards, contact the National Electrical Manufacturers Association, 155 East 44th Street, New York, NY 10017.)

2.1.5 Underwriters' Laboratories (UL), Inc. standards

UL 651 Rigid Non-metallic Conduit

(For copies of UL standards contact Underwriters' Laboratories Inc., Publications Department, 207 E. Ohio Street, Chicago, IL 60611.)

2.1.6 Institute of Electrical and Electronics Engineers (IEEE) Standards

IEEE-404-1977 Standard for Power Cable Joints

IEEE-48-1975 Standard for Cable Terminations

(For copies of IEEE standards, contact IEEE Standards Office, 345 East 47th St., New York, NY 10017-2394.)

2.1.7 American National Standards Institute (ANSI) Standards

ANSI C119.2-1974 Water Immersion Test

ANSI C119.1-1974 Sealed Insulated Underground Connector System Rated 600 Volts

(For copies of ANSI standards, contact the American National Standards Institute, Inc., 1430 Broadway, New York, NY 10018.)

3. REQUIREMENTS

3.1 Materials and workmanship.- The requirements of this specification shall be considered as minimum requirements and shall not relieve the contractor from furnishing and installing higher grades of materials and workmanship than specified herein when so required by the contract drawings and specifications.

3.1.1 Government-furnished cable.- Government-furnished cable will be delivered to the contractor in accordance with the provisions of the contract. The contractor shall test the cable in accordance with paragraph 4.1 and report electrical or physical cable defects within two weeks of cable receipt. If adequate cable lengths are unavailable for testing on the reel, a visual inspection shall be made and any damage reported. The required tests shall then be made immediately after unreeling. Hidden defects discovered when installing the cable shall be reported to the Contracting Officer in accordance with the contract provisions.

3.1.2 Contractor-furnished cable.- Single and multi-conductor power, control and signal cables furnished by the contractor shall conform to the following FAA specifications where appropriate:

FAA-E-2013	for single- and multi-conductor power cables used in 600 to 5,000 volt applications;
FAA-E-2042	for use in electrical control applications;
FAA-E-2072	for use in telephone communications;
FAA-E-2171, -2271, -2524, -2619	as appropriate for coaxial communications cables.
FAA-E-2793	for single- and multi-conductor power cables used in 5,000 to 25,000 volt applications;
L-824	Class C, 5 KV for airport single-conductor series lighting cable. Cable conforming to MIL-C-38359, Class II is an acceptable alternative.

For applications where no FAA specification is appropriate, the cable shall meet the following minimum requirements:

(a) Copper conductors.

(b) Thermoplastic, thermosetting, or silicon rubber insulation.

(c) Neoprene, polyethylene, or vinyl jacket for normal areas and PTFE (teflon) jacket in areas exposed to fuel, oil, solvent or chemical leakage, excessive ground water or extremely acidic soil.

(d) For rated voltages to 8 KV, insulation shall have a minimum continuous voltage withstanding capability of 4 times rated voltage (but not less that 150 volts). For rated voltages above 8 KV, insulation shall have a minimum continuous voltage withstanding capability of 3 times rated voltage. Cable voltage surge capabilities shall be 15 times rated voltage for voltages to 8 KV, 9 times rated voltage for voltages above 8 KV through 15 KV, and 7 times rated voltage for voltages above 15 KV through 25 KV.

(e) The pull strength of the completed cable(s) shall exceed the expected installation forces by a minimum of 50 percent.

3.1.3 Workmanship.- All work shall be done by experienced personnel regularly engaged in this type of work. All cable splices shall be performed only by experienced and qualified cable splicers. Before any cable splices are made, the Contracting Officer may request a sample splice be made for his approval. When required by the local government, the workers shall be properly licensed.

3.2 Trenching

3.2.1 Precautions.- The contractor shall take all reasonable precautions to protect existing underground equipment and utilities such as fuel tanks, water lines, and buried control and power cables. All known FAA power and control cables leading to and from any operating facility will be marked in the field by the Contracting Officer for the information of the contractor before starting work in the general vicinity. The contractor shall contact utility companies and the airport sponsor for the location of existing utility lines and airport sponsor cables. Thereafter, through the entire construction period, buried equipment and utilities shall be protected from damage. The contractor shall immediately repair, with equal material by skilled workmen, any underground cables damaged by contract workers, equipment or work. Prior approval from the Contracting Officer shall be obtained for the materials, workers, time of day or night, method of repairs, and for any temporary or permanent repairs the contractor proposes to make. Upon completion, any repair work shall be inspected and approved by the Contracting Officer with the concurrence of the affected utility company or airport sponsor.

3.2.2 Excavations.- Where turf is well established and sod can be removed, it shall be carefully stripped and properly stored. The contractor shall excavate all trenches for direct-earth burial cable as follows:

(a) At the depth specified in paragraph 3.2.2.2 .

(b) To a width of not less than six inches for single or multiple runs of power, or control and signal cable.

(c) To a width and depth which will provide horizontal or vertical separation of power cables as specified in paragraph 3.4.1.1 from other power cables of different voltage ratings, or from any power cable and any control or signal cable.

(d) Backfill shall be firmly tamped in the separation area.

NOTE: Control and signal cables may be installed without separation from each other.

Unless otherwise specified, all cables in the same location and running in the same general direction shall be installed in the same trench. Trenches for cables may be excavated manually or with powered trenching equipment. Walls of trenches shall be essentially vertical so that a minimum of shoulder surface is disturbed. The bottom surface of trenches shall be essentially smooth and free from coarse aggregate. Unless otherwise specified, trenches shall be opened only for the time required to install and inspect cables. The trench shall be closed in the same working day.

3.2.2.1 Rock.- Where rock is encountered, it shall be removed to a depth of 3 inches below the required cable depth, and shall be replaced with a bedding material of earth or sand containing no mineral aggregate particles that would be retained on a 1/4-inch sieve. When ledge is encountered, the Contracting Officer shall be consulted regarding alternatives such as re-routing, transition to overhead lines, or installation in rigid steel conduit.

3.2.2.2 Cable location and depth requirements.- Unless otherwise specified all cables, ducts, and conduits shall be installed as follows:

(a) Direct-earth-burial cables shall be a minimum of 24 inches below finished grade when on airport or government controlled property, and 36 inches below finished grade when off airport or government controlled property. Cables shall not be direct buried under paved areas, roadways, railroad tracks, or ditches.

(b) Underground ducts shall be installed so that the tops of all such ducts are at least 18 inches below finished grade. Underground ducts, except rigid steel conduit, shall not be installed under paved areas, roadways, railroad tracks, or ditches.

(c) Concrete-encased duct or rigid steel conduit shall be installed so that the top of the concrete envelope or conduit is not less than 18 inches below the bottom of paving when installed under runways, taxiways, and other paved areas; and not less than 18 inches below finished grade when installed in unpaved areas.

(d) When cable is routed under railroad tracks, it shall be in rigid-steel conduit or concrete-encased duct with the top of the duct not less than 42 inches below the base of the rail.

3.2.3 Backfilling.- Trenches shall not be excessively wet and shall not contain pools of water during backfilling operations. Trenches shall be completely backfilled and tamped level with the adjacent surface. If necessary to obtain the desired compaction, backfill material shall be moistened or aerated. When sod is to be placed over a trench, backfill shall be stopped at a depth equal to the thickness of the sod to be used. Any excess excavated material shall be removed in accordance with instructions of the Contracting Officer.

3.2.3.1 Underground Cable.- After underground cable has been installed the trench shall be backfilled. The first layer of backfill shall be 3 inches deep, loose measurement, and shall be either earth or natural sand containing no material aggregate particles that would be retained on a 1/4-inch sieve. This layer shall not be compacted, except as noted in paragraph 3.4.1.1. The second layer shall be 9 inches deep, loose measurement, and shall contain no particles that would remain on a 1-inch sieve, the remainder of the backfill shall be excavated or imported material and shall not contain stone aggregate larger than 4 inches maximum diameter. The second and subsequent layers shall be thoroughly tamped and compacted to at least the density of the adjacent undisturbed soil and to the satisfaction of the Contracting Officer.

3.2.4 Restoration.- Where sod has been removed it shall be replaced as soon as possible after the backfilling is completed. All areas disturbed by the trenching, storing of dirt, cable laying, pad construction, and other work shall be restored to the original condition. Restoration shall include any necessary grading, fertilizing, liming, seeding, sodding, sprigging or mulching as required to restore the disturbed area to match the adjacent area. Where trenching cuts through paved areas, the surface shall be properly backfilled and resurfaced with paving similar to the original paving. Resurfaced areas shall be level with original paving, free from cracks and capable of withstanding full traffic loads without settling or cracking. The contractor shall be held responsible for maintaining all disturbed and restored surfaces until final acceptance.

3.3 Installation of underground ducts

3.3.1 General.- All underground ducts shall be: (a) Rigid-steel conduit (heavy wall) conforming to Federal Specification WW-C-581, or (b) Rigid non-metallic conduit (duct) conforming to UL 651 or NEMA TC 6.

3.3.1.1 Conduit burial.- Rigid-steel conduits may be direct earth buried. Rigid non-metallic conduits shall be concrete encased.

3.3.1.2 Duct size, material, and installation.- Ducts shall be of the size, material, and type indicated on the drawings or specifications. Standard precast spacers shall be used for duct support and alignment. Where no size is indicated on the drawings or specifications, the ducts shall not be less than 4 inches inside diameter. All duct lines shall be laid to slope toward handholes, manholes, and duct ends for drainage. Grades shall be at least 3 inches per 100 feet. On runs where it is not practicable to maintain the slope all one way, the duct line shall be sloped from the center in both directions toward manholes, handholes or duct ends. Pockets or traps where moisture may accumulate shall be avoided.

3.3.1.3 Access penetrations.- Where a steel conduit penetrates a wall of a manhole or handhole, a grounding bushing shall be provided. These grounding bushings shall be connected to each other and to the earth ground system with No. 6 AWG bare copper conductors.

3.3.1.4 Mandrel requirements.- The contractor shall mandrel each duct he installs and each existing duct in which he installs or replaces cable. An iron-shod mandrel, not more than 1/4-inch smaller than the bore of the duct, shall be pushed through each duct with jointed conduit rods. The mandrel shall have a leather or rubber gasket slightly larger than the duct hole.

3.3.1.5 Spare ducts.- All spare ducts installed by the contractor shall be provided with No. 10 AWG copper-clad steel pull wires or polyolefin pull lines with a minimum tensile strength of 200 pounds. The open ends of the spare ducts shall be sealed with removable tapered plugs, of a type recommended by the duct manufacturers. The plug shall be adapted to firmly secure the pull wire.

3.3.1.6 Duct protection.- All ducts shall be securely fastened in place during construction and progress of the work, and shall be plugged to prevent seepage of grout, water, or dirt. Any duct section having a defective joint shall not be installed. Trenching for ducts shall be in accordance with paragraph 3.2 of this specification.

3.3.2 Ducts encased in concrete.- All concrete encasement ducts shall be placed on a layer of concrete not less than 3 inches thick prior to its initial set. Where two or more ducts are encased in concrete the contractor shall space them not less than 1-1/2 inches apart (measured from outside wall to outside wall) using spacers applicable to the type of duct. As the duct laying progresses concrete not less than 3 inches thick shall be placed around the sides and top of the duct bank. End bells or couplings shall be installed flush with the concrete encasement where required. Interlock spacers shall be used every 5 feet to insure a uniform spacing between ducts. All bottom spacers shall be secured to 1-inch by 3-inch boards to prevent sinking and overturning. All joints in adjacent ducts shall be staggered a minimum of 24 inches apart and shall be made completely waterproof prior to concreting.

3.3.3 Ducts without concrete encasement.- Trenches for single-duct lines shall be not less than 6 inches nor more than 12 inches wide, and the trench for two or more ducts installed at the same level shall be proportionally wider. Trench bottoms for ducts without concrete encasement shall be made to conform accurately to grade to provide uniform support for the duct along its entire length. A 3-inch layer of bedding material shall be placed around the ducts. The bedding material shall contain no particles that would be retained on a 1-inch sieve. The bedding material shall be tamped until firm. When two or more ducts are installed in the same trench without concrete encasement, they shall be spaced not less than 2 inches apart (outside wall to outside wall) in a horizontal direction or not less than six inches apart (outside wall to outside wall) in a vertical direction.

3.4 Installation of cables.- Wherever possible, cable shall be run in one piece, without splices, from connection to connection. The number of splices shall be minimized. If the job plans do not include a schedule for laying each reel of cable, the contractor shall provide such a plan for approval of the Contracting Officer prior to installing any of the cable. The plan shall be predicated on the use of the longest practicable lengths of cable to minimize splicing requirements.

(a) When cable cutting is required, cable ends shall be effectively sealed against moisture immediately after cutting. The method of sealing shall be approved by the Contracting Officer. Bends of a radius less than eight times the diameter for rubber-covered or plastic-covered cable, or twelve times the diameter for metallic armored cable shall not be made. Cable that has been kinked shall not be installed.

(b) When unreeling, an observer shall be stationed at the reel to report any cable irregularities. Unless specifically stated in the plans, non-armored cable shall be used in duct and armored cable used for direct earth burial. Non-armored coaxial and series lighting cable may be direct

earth buried when not otherwise specified. Grounding conductors, where required, shall be No. 6 AWG bare copper wire, minimum.

3.4.1 Direct earth burial.- Direct earth burial cable shall be unreeled in place in the open trench or adjacent to the trench, and carefully placed in the trench bottom. Pulling the cable into the trench, or dragging it over the ground will not be permitted.

3.4.1.1 Separation between direct earth burial cables.

(a) Power cables of the same circuit may be laid together in the trench without separation.

(b) Power cables of different circuits of less than 600 volts may be laid in the same trench without separation.

(c) Power cables rated 5,000 volts shall be separated a minimum of 6 inches from all other power cables rated 600 volts and below, and from all control and signal cables.

(d) Power cable of more than 5,000 volts shall be separated a minimum of 12 inches from power cables rated 5,000 volts and below, and from all control and signal cables.

(e) Control and signal cables may be in the same trench without separation from each other.

(f) Backfill separating cables shall be firmly tamped.

(g) Where cables of different types (i.e., power and control or signal) or different voltages are jointly installed as stated in (a) through (e) above, the individual cables or groups of cables shall be clearly and unambiguously identified by voltage and type.

3.4.1.2 Cable slack loop, direct earth burial.- A cable slack loop of 3 feet plus or minus 6 inches shall be left on each end of cable runs, and all points where cable connections are brought above ground. The slack loop shall be installed at the same minimum depth as the cable run. Loops shall have no bends with an inner radius less than twelve times the outside diameter of the cable. Where cable is brought above ground, additional slack left above ground shall be as shown by the drawings or as directed by the Contracting Officer. Cable loops shall not be installed on coaxial cable. Joints in coaxial cables shall be made in accordance with the contract specification.

3.4.2 Cable installation in duct.- The contractor shall verify that the duct is open, continuous, and clear of debris before installing cable. Cable shall be installed in a manner to prevent harmful stretching of the conductor, injury to the insulation, or damage to the outer protective covering. All cable ends shall be sealed with moisture-sealing tape before pulling, and shall be left sealed until connections are made. Where more than one cable is to be installed in one duct, all cables shall be pulled at the same time. In no case shall a splice be pulled into a duct.

3.4.2.1 Cable pulling.- The apparatus used to pull cable at the entrance to the manhole shall be a pulling tube or shall consist of a framework and two sheaves, the diameter of the sheaves being at least ten times that of the diameter of the largest cable. Cable installed in the duct may be pulled by a power winch or by hand. Adequate cable pulling compound shall be used. The type of pulling compound shall be approved by the Contracting Officer. Petroleum grease shall not be used. The surface of any cable sheath or jacket shall not be damaged to a depth greater than 1/10th the original thickness or be flattened out-of-round more than 1/10th the outside diameter.

(a) Table I lists maximum pulling tensions for commonly installed cables. Maximum pulling tensions for cables not listed in this table shall be obtained from the cable manufacturer.

(b) The limitations in Table I do not preclude the use of steel or wire rope for cable pulling. A dynamometer graduated to indicate the tension on the cable being pulled can be used, or the contractor shall adapt a rope harness properly sized to limit pull tension to the value indicated. Any combination of a group of cables to be pulled into a duct shall not exceed the sum of individual allowable tension of each cable plus 15 percent.

(c) To minimize splicing, the longest practicable lengths of cable shall be pulled into the ducts at one time. Unless otherwise specified, manholes and handholes should be as far apart as practicable for the type of cable installed. Under no condition should the distance between handholes or manholes exceed 600 feet. If possible, the maximum cable length to be pulled shall be obtained from the cable manufacturer. An estimate of the absolute maximum length of pull in a straight duct may be calculated as follows:

$$L = T \times KW$$

Where:
- L = length of cable pull in feet,
- T = total tension in pounds,
- K = coefficient of friction, 0.3 for single cables, 0.4 for multiple cables, and
- W = weight of all cables being pulled in pounds per foot.

This formula is based on new, level, straight plastic duct and the use of adequate cable pulling compound.

3.4.2.2 Separation of cables installed in conduit or duct.

(a) Power cables of the same circuit shall be installed in the same duct.

(b) Power cables of less than 600 volts for different circuit may be installed in the same duct.

(c) Power cables shall not be installed in the same duct with control and signal cables.

Table I. Maximum Allowable Non-Armored Cable Pull Using Dynamometer or Rope.

CABLE	TENSION (Pounds)	ROPE DIAMETER (INCHES)			
		Cotton	Manila	Dacron	Nylon
2 - 1c #8 Solid	275	3/16			
3 - 1c #8 Solid	367	1/4	3/16		
4 - 1c #8 Solid	550		1/4		
2 - 1c #6 Stranded	420	1/4	3/16		
3 - 1c #6 Stranded	630	5/16	1/4		
4 - 1c #6 Stranded	840	3/8		3/16	
1 - 2c #8 Stranded	305	1/4			
1 - 3c #8 Stranded	395	1/4			
1 - 4c #8 Stranded	585		1/4		
1 - 2c #6 Stranded	455	1/4	3/16		
1 - 3c #6 Stranded	685	5/16			
1 - 4c #6 Stranded	880	3/8	5/16	3/16	
1 - 6c #12 Stranded	315	1/4			
1 - 12c #12 Stranded	630	5/16	1/4		
1 - 12PR #19 Solid	230	3/16			
1 - 25PR #19 Solid	541		1/4		
1 - 50PR #19 Solid	1061	7/16			3/16
1 - 100PR #19 Solid	2000		15/32	5/16	
RG-11/U	85	3/16			
RG-213/U (RG-8/U)	125	3/16			
RG-214/U (RG-9/U)	145	3/16			
RG-216/U (RG-13/U)	135	3/16			
RG-217/U (RG-14/U)	250		1/4		
RG-218/U (RG-17/U)	800	7/16			

(d) Power cables shall not be installed in the same duct with power cables of a lower voltage rating.

(e) Control and signal cables may be installed in the same duct.

(f) Power cables may be installed in the same duct system as control and signal cables, but power cable shall be installed in a different duct separated a minimum of 3 inches (outside wall to outside wall) from ducts that encase control and signal cables. Power cables rated more than 600 volts shall be separated from control and signal cables to the maximum extent possible in the duct system.

3.4.3 Cable installation in manholes.- Power and control cables shall be installed in separate manholes unless otherwise specified on the job plans. If space is available, cable slack sufficient for one splice for each cable shall be left in each manhole.

3.4.3.1 Separation of cables in manholes.- When it is not possible to install power and other cable types in separate manholes, they shall be installed on opposite sides. In addition, the entire exposed length of all control and signal cables shall be fireproofed by applying a 1/4 inch minimum thickness of arc-proofing 3M No. 7700 or equal, in accordance with the manufacturer's instructions.

(a) Where cables of different types (i.e., power and control or signal) or different voltages are jointly installed as stated in (a) through (e) of paragraph 3.4.2.2, the individual cables or groups of cables shall be clearly and unambiguously identified by voltage and/or type.

(b) Where it is suspected that interference on signal or control lines is caused by their proximity to power cables, the control or signal cables and/or the power cables shall be shielded. These shields shall be grounded.

3.4.3.2 Cable racking.- Cable racks in manholes and handholes are furnished under manhole/handhole specifications. These racks shall be either made of plastic or galvanized steel provided with porcelain insulators. Cables shall be carefully formed on the racks around the interior of manholes or handholes, avoiding sharp bends or kinks. All splices and cables shall be tied to cable racks using 1/8-inch nylon line. Where possible, splices shall be a minimum of 2 feet from the mouth of the duct opening into the manhole or handhole. Where this is not possible, splices shall be located as advised in the manhole/handhole specification or drawing. Where feasible, splices in different cables shall be staggered.

3.4.4 Cable terminations.- All control and signal cables shall be terminated as specified. All power cable terminations rated above 5,000 volts shall be made with a stress-relief devices. Where potheads are used, the contractor shall strictly conform with the manufacturer's installation recommendations. Where terminations are made at transformer bushings, both high and low voltage exposed conducting surfaces shall be taped for full rated voltage, e.g., for full primary voltage on the primary side and for full secondary voltage on the secondary side, and coated with Glyptal red enamel or equal.

3.4.5 Cable grounding.

(a) Shields on shielded power cables shall be grounded at each end. The grounding conductor shall be No. 2 AWG bare copper and connected to a ground rod by exothermic welding, hydraulic crimping, or explosive crimping using a tap connector. Exothermic weld connections and hydraulic crimping connections may be direct buried. Explosive crimped connections shall be located in access wells. The shields or armor on direct earth buried power cables shall be grounded on each end, but not at each splice.

(b) Control cable shields shall be grounded at each end. Intermediate splices in control cables shall be insulated from ground to values equal to that of the original cable.

(c) Telephone cable shields shall be grounded at one end only. The shield shall be insulated from ground equal to that of the original cable at each splice.

(d) Coaxial cable shields shall be insulated from ground throughout the length of the cable run, or as shown on the drawings. These cable shields shall terminate at connectors mounted on metal bulkhead connector plates. These connector plates shall be a minimum of 1/4 inch thick and shall be constructed of tinned copper or other material compatible with the cable line connectors. The connectors shall provide a path to ground for cable shields except when the shield must be isolated for proper equipment operation. If external and internal cables are of a different size, the connector size change may be accomplished by the feed-through connectors at the plate. The bulkhead connector plate shall be bonded to the earth electrode system with a No. 2/0 AWG insulated copper cable, colored green with a red tracer. The bulkhead connector plate shall also be bonded to building steel, where building steel is properly bonded to the earth electrode system. Exothermic welds or FAA approved pressure connectors shall be used for these connections.

3.4.6 Cable guard wires.- Where indicated on the drawings, the contractor shall install cable guard wires to protect underground conductors from the effects of lightning discharges. Guard wires may be direct earth buried or installed in nonmetallic ducts. Each guard wire shall be a bare solid No. 6 AWG copper conductor installed not less than 10 inches above the buried conductors or ducts. One guard wire shall be installed above the centerline of conductor or duct runs of 3 feet or less in width. Two guard wires shall be installed for conductor or duct runs greater than 3 feet in width with each guard wire not greater than 12 inches from the outside edges of the conductor or duct runs. Guard wires shall be grounded at each end of the cable run to a 3/4 inch by 10-foot long copper-clad ground rod driven not less than 12 inches below grade. Ground rods shall be installed 6 feet from the cable or duct installation and shall be connected to the guard wires with No. 2 AWG bare copper conductors. All connections to the ground rods and guard wires shall be exothermic welds.

3.5 Cable marking.

3.5.1 Cable tagging.- All cables shall be tagged in each manhole or handhole with not less than two tags per cable, one near each duct entrance hole. Tags shall be attached to cable immediately after installation. Cable terminations and potheads shall be tagged as to function, i.e., facility which it serves or other pertinent data. Tags shall be circular in shape, 2-inch minimum diameter and of not less than 0.020-inch thick copper or 0.0625-inch thick lead. Steel lettering dies, 1/4-inch minimum size or the equivalent engraving process, shall be used to mark the tags. Each tag shall be securely attached to the cable using 1/8-inch nylon cord. Tags shall be marked with an abbreviation of the name of the facility or facilities served by the cable plus an appropriate letter: "P", "T", "C", or "R" (Power, Telephone, Control, or Radio Frequency respectively). Where telephone type cable is used for control functions it shall be marked "T" instead of "C." Where more than one identical cable is used to serve the same facility, they may be bundled under one tag unless job plans state otherwise. Figure 1, Typical Cable Tag, indicates the type of cable tag required.

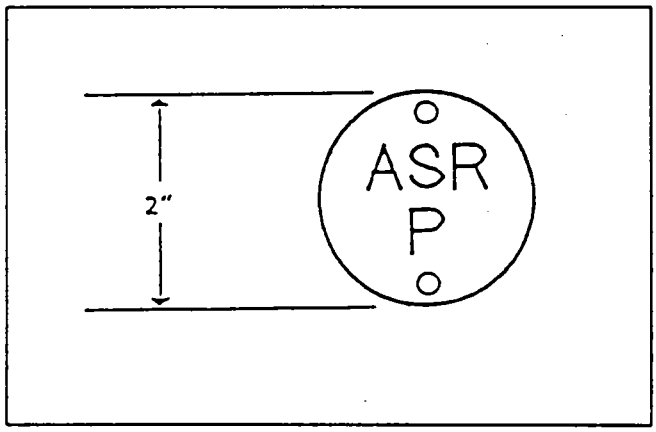

Figure 1. Typical Cable Tag.

3.5.2 Cable markers.- The location of direct earth burial cables shall be marked at grade surface with concrete slabs, 2-feet square by 6-inch thick. These markers shall be placed every 200 feet along a cable run, at each change of direction of the cable, and at each cable splice. These markers shall be installed within 24 hours of the final backfill of the cable trench. Markers shall be installed flat in the ground with the top approximately 1 inch above the finished grade. After the concrete marker has set a minimum of 24 hours, the top surface shall be painted with bright orange paint manufactured specifically for uncured exterior concrete. Markers shall not be installed in concrete or asphalt surfaces. Each cable marker shall have the following information impressed upon its top surface:

(a) The word "CABLE."

(b) Name of facility served, e.g., "ASR," "VORTAC," "ALS."

(c) Abbreviations for all the types of cables installed, e.g., "P" for Power, "C" for Control, "T" for Telephone, and "R" for Radio Frequency (coaxial).

(d) An arrow to indicate the direction or change of direction of the cable run.

(e) Any additional information, as directed by the Contracting Officer.

Manholes and handholes shall be identified by "FAA-POWER" or "FAA-CONTROL" markings on the covers. These markings shall be cast into steel covers, or die stamped into a nominal 1/16 inch minimum thickness copper plate brazed or fastened to the cover with a minimum of two 10-32 brass screws.

The contractor shall obtain approval from the Contracting Officer for the information to be impressed on the cable markers and the method used to make the impressions. Letters shall be 4 inches high, 3 inches wide and 1/2 inch deep. An example is shown in Figure 2, Typical Cable Run Marker.

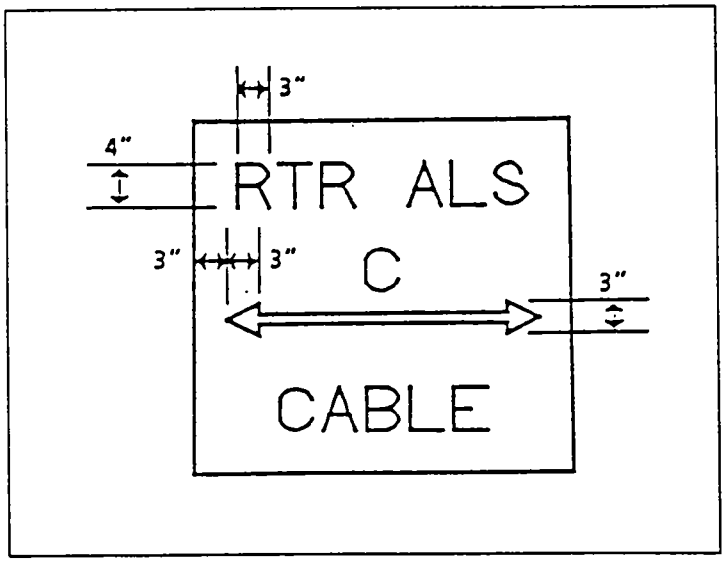

Figure 2. Typical Cable Run Marker.

3.6 Cable Splicing.- The use of underground splices shall be minimized. Where underground splices are required, they shall be installed in handholes or manholes. Direct-earth burial of splices shall only be allowed where indicated on the drawings or as approved by the Contracting Officer. Each cable splicer shall be qualified in making cable splices and in the use of the specified cable splicing kits. The Contracting Officer may request a test splice of each type and voltage rating from each cable splicer. The contractor shall obtain approval of the splice and cable splicer from the Contracting Officer prior to making any field splices. All cable splicing methods and materials shall be of a type recommended by the splicing materials manufacturer for the cable to be spliced. All splices shall be as

manufactured by Raychem Corporation, 300 Constitution Drive, Menlo Park CA 94025; Sigmaform Corporation, 2401 Walsh Avenue, Santa Clara CA 95051; 3M Corporation, 3M Center, St. Paul MN 55101; or approved equal as follows:

(a) Power cables above 5,000 volts. Use standard splicing kits as manufactured by Raychem Corporation, Energy Division, HVS-1520 and HVS-2520, or approved equal.

(b) Power cables 601 to 5,000 volts. Use standard splicing kits as manufactured by Raychem Corporation, Energy Division, HVS-800, or Sigmaform Corporation, APL-L823-14C-54-1, 2, or 3, as appropriate, or approved equal. For unshielded series lighting power cables a field installed plug-in splice in accordance with FAA specification L-823, "Plug and Receptacle Cable Connectors," shall be used. When plug and receptacle are subject to water submersion, such as in threshold fixture cans, an "APC" Raychem, "APL" Sigmaform, or approved equal splice cover shall be added.

(c) Power cables 600 volts and below. Use heavy-wall self-sealing heat-shrinkable tubing manufactured by Raychem Corporation, Energy Division, Part No. "WCSM," Sigmaform Corporation, Part No. "SST," or approved equal.

(d) Control and telephone cables. Use standard splicing kits as manufactured by Raychem Corporation, Telecommunications Division, "XAGA 1600," Sigmaform Corporation, "STEB," or approved equal. Type "D" polyurethane re-enterable encapsulant shall be used for encapsulation of the wire bundle and cable core moisture blockage. An approved encapsulant is available from Texocom, Garland TX; or 195RE encapsulant from Hexcel Corporation, Dallas TX. Cable preparation shall include, and particular attention shall be given to cleaning the grease filling from the splice area. Use a non-reacting, non-residue type solvent.

(e) Coaxial cable (nonpressurized). Appendix A, "Underground Splicing of RG-164 Armored Coaxial Cable" presents a procedure for splicing coaxial cables. This procedure shall be adapted by the contractor for all cable to be installed and shall be submitted to the Contracting Officer for approval prior to any cable splicing.

(f) Connectors, power cable. Stranded cable conductor connections shall be made using crimp connectors utilizing a crimping tool designed to make a complete crimp before the tool can be removed.

(g) Connectors, control and telephone cable. Amp Picabond type connectors #61292-2 are preferred for splicing telephone pair conductors, because of their small size. Other connectors may be used with prior approval. Control cable connectors shall be crimp or solder type. If crimp connectors are used, they must be installed with a ratchet type tool which requires full compression before it releases. Insulation for connectors may be either factory applied or field taped.

(h) Cable armor and shields. Armor and shield shall be made continuous through a splice. Armor and shield shall be folded back prior to splicing, then reinstalled across the splice and bonded with approved bonding clips, or

soldering when copper material is used. If the armor is galvanized, it shall be bolted. Excess threads should be cut from bolts and wrapped with butyl tape so there are no sharp projections prior to using heat-shrink tubing.

(i) Evaluation of "or equal products." Deviation from the requirements of paragraph 3.6 may be allowed with prior Contracting Officer approval. To obtain product approval, the contractor shall submit samples of the product proposed, drawings showing splicing method details, and a statement of his experience making splices with the product. In addition, products shall meet the standards in Table II, "Cable Slicing Specification Equivalents."

Table II. Cable Splicing Specification Equivalents.

PRODUCT IDENTIFIED IN PARAGRAPH	APPLICATION STANDARD	LEVEL OF ACCEPTANCE
3.6 (a)	1. IEEE-404-1977, Standard for Power Cable Joints.	Meet or exceed.
	2. IEEE-48-1975, Standard for Cable Terminations.	Meet or exceed.
	3. ANSI C119.2-1974 Water Immersion Test.	Meet or exceed.
3.6 (b)	Same as 3.6 (a).	Meet or exceed.
3.6 (c) and (e)	ANSI C119.1-1974 Sealed Insulated Underground Connector System Rated 600 Volts.	Meet or exceed.

4. QUALITY ASSURANCE PROVISIONS

4.1 Cable testing.- All cable testing shall be performed by the contractor in the presence of the Contracting Officer. The contractor shall furnish all necessary test instruments, except where otherwise indicated. All instruments shall have been calibrated within a two year period preceding cable testing by a laboratory approved by the measurement instrument manufacturer. All cables shall be tested before installation, after each splice, and again upon completion of the installation. All testing shall be completed on contractor-installed cable before connection is made to any existing cables. The FAA will test existing cables prior to connecting to contractor-installed cables.

4.2 Power cables, 5,000 volts.- Conductors, splices, and other contractor performed connections shall be tested at 10,000 volts. Tests shall be made between conductors and from each conductor to ground with the cable shield and armor grounded. To assure that the cable is completely charged, each test shall continue for a period of not less than 1 minute after instrument readings stabilize. Minimum acceptable insulation resistance value of the cable is 50 megohms. Unless cable length exceeds 10,000 feet, no reduction in the specified insulation resistance should be allowed. In cases where cable length exceeds 10,000 feet, the minimum allowable insulation resistance may be corrected downward based on the total number of 10,000-foot cable segments (i.e.; up to 10,000 feet, 50 megohms; 10,000 to 20,000 feet, 50 x 2 megohms; 20,000 to 30,000 feet, 50 x 3 megohms, etc.).

Tests shall be made for continuity of cable shield armor. An ohmmeter-type instrument may be used. The contractor shall demonstrate that circuits are properly connected, including operation of each lighting and power circuit for not less than one-half hour.

4.2.1 Power cables, above 5,000 volts.- Power cables rated above 5,000 volts shall be tested as in paragraph 4.2, except that the test voltage shall be twice the cable voltage rating plus 1,000 volts.

4.3 Cables, 5,000 volts, series lighting.- After completing installation, each series loop with its connectors and lighting transformers shall be tested for insulation resistance. Test shall be conducted in accordance with paragraph 4.2 with both ends of each loop disconnected from the series cutouts at the substation, except for the following:

(a) If the transformers cannot withstand a DC voltage of 10,000 volts, the test shall be performed at the highest allowable transformer voltage.

(b) Depending upon the number of lighting transformers in the loop and their individual insulation resistances, the allowable loop insulation resistance may be reduced, based on the parallel summation of the cable and transformer insulation resistances. However, the cable insulation resistance shall never be less than the minimum value allowed in paragraph 4.2.

With both ends of each loop disconnected from the series cutouts at the substation, each loop will also be tested for loop resistance with the

lighting transformers installed. The DC circuit resistance of each series loop shall be calculated using of the following formula:

$$R_{total} = (R_x \times L_m) + (R_t \times T_n)$$

Where: R_{total} = Loop resistance

R_x = Resistance of the cable conductor per 1,000 feet (0.64 ohms @ 68 degrees Fahrenheit)

L_m = Length of loop in thousands of feet.

R_t = Resistance of the transformer primary as measured with a Wheatstone bridge.

T_n = Number of series transformers in loop.

The loop resistance shall be measured with a Wheatstone bridge or equivalent instrument and recorded. The measured resistance value shall not exceed the calculated resistance by more than 20 percent.

4.4 Power cables, 600 volts and below.- All power cables shall measure not less than 50 megohms resistance between conductors, and between conductors and ground. Measurements shall be taken at not less than 500 volts DC.

4.5 Control and telephone cables.- After installation these cables shall comply with the requirements of Table III.

Table III. Control and Telephone Cable Conductors.

CABLE SIZE	MINIMUM NUMBER OF ACCEPTABLE CONDUCTORS
12 pair or less	All
13 through 25 pair	All, except 1 pair
Over 25 pair	All, except 2 pairs

4.5.1 Acceptable conductors satisfactorily pass tests for (a) continuity, (b) freedom from short circuits, and (c) a minimum of 50 megohms resistance between conductors and from each conductor to grounded shield when tested at not less than 500 volts DC.

4.5.2 Cable testing.- The contractor shall test the cable prior to installation and tag any defective conductor pairs that are found. The contractor shall notify the Contracting Officer of any unusable conductors found. These may be subtracted from the allowable number of excepted

conductors specified in Table III, if the cable is government furnished. Tests between unpaired conductors showing an insulation resistance below infinity on a 500-volt, 100-megohm, or equivalent insulation-measuring instrument shall be tabulated by the contractor and furnished to the Contracting Officer. This report shall indicate measured resistance values.

NOTE: Some telephone cables may include an extra conductor pair, and if so, may have one pair tagged as defective by the manufacturer. This extra conductor pair shall not be included in the minimum number of acceptable pairs listed in Table III.

4.6 Coaxial cables.- The insulation and loop resistance of radio frequency cables shall be measured prior to installation. The results shall be recorded and furnished to the Contracting Officer. The insulation test shall be made between the center conductor and shield with a 500-volt DC instrument. The loop resistance test shall also be made in the same way, but with the center conductors shorted to the shield at the far end of the cable. This test shall be made with a bridge, ohmmeter, or other suitable instrument.

4.6.1 Testing after installation.- After installation, the conductor-to-shield and conductor-to-ground resistance shall exceed 50 megohms when measured at 500 volts DC. Loop resistance shall be within 10 percent of the measured values prior to installation, e.g., measured resistance per 1,000 feet of cable on a reel, multiplied by each 1,000 feet and fraction thereof of installed cable. Shield-to-ground insulation shall be measured and the results furnished to the Contracting Officer.

4.6.2 Pulse reflection test.- The FAA will conduct pulse reflection tests on coaxial cables which carry trigger or video information. These tests will be conducted prior to and after cable installation to determine if discontinuities were introduced in the cable during installation. Discontinuities can be caused by improper connector installation or mechanical damage to the cable. Test results will be recorded and furnished to the contractor.

4.6.3 Electrical test.- A hipot tester with microammeter current leakage meter, or equivalent, will be used to apply 3,000 volts DC between the inner and outer conductors for a minimum period of 3 minutes. While this voltage is applied, no noticeable current shall flow between the inner and outer conductors after the charging current has stabilized.

4.7 Failure of cable under test.- If the contractor-furnished cable fails to meet test requirements after installation, the contractor shall repair or replace, at his expense, the sections of cable proven defective. If the cable is government furnished and the failure results from a manufacturer's defect not detectable prior to installation, the government will repair or replace the cable. If the government-furnished cable fails to meet test requirements after installation, due to faulty installation practices, the contractor shall repair or replace the sections of cable proven defective.

5. PREPARATION FOR DELIVERY.- Not applicable.

6. NOTES

6.1 General.- This specification is to be used as part of the contract documentation for construction and facility modification projects that do not require major design efforts. No waivers to contractors, other than those indicated as alternatives, are allowed. This specification is not to be used as a design guide. For design information, consult FAA-STD-019, "Lightning Protection, Grounding, Bonding and Shielding Requirements for Facilities"; FAA-STD-020, "Transient Protection, Grounding, Bonding and Shielding Requirements for Equipment"; Order 6950.19, "Practices and Procedures for Lightning Protection, Grounding, Bonding, and Shielding Implementation"; Order 6950.20, Considerations for Lightning Protection, Grounding, Bonding and Shielding" and other documentation as applicable.

6.2 Conflicts between documents.- In all but the smallest of modification or construction contracts, conflicts are unavoidable between the various documents cited in the contract or referenced in an included specification. Any proposal request using this document should contain the following provisions: "Prospective contractors shall, as part of their proposals, enumerate, identify, and list conflicts that exist within the contract documents, and between those documents and the rules, regulations, and codes of the local utility company and local, county or state governing bodies."

APPENDIX A. SPLICING ARMORED COAXIAL CABLE

Use the following procedure to splice RG-164 armored coaxial cable for underground installation:

1. Strip 6 inches of outer cable jacket from each end to be spliced.

2. Install a 12-inch length of Raychem WCSM 51/16 mm, or equal, over one end of the cable and a 6-inch length of Raychem WCSM 38/12 mm, or equal, over the other end of the cable to be spliced. Slide both sleeves back out of the way.

3. Loosen the armor, unwrap and fold it back to expose the inner jacket. Cut the inner jacket 4 inches from the cable end. Cut the outer jacket 2 inches from the cable end.

4. Fold back and temporarily tape the braided shield with Scotch 88. Cut the dielectric 1-inch from inner jacket cut, and approximately 3 inches from the end of cable. This will provide overlap for braid and armor. CAUTION: Do not nick the center conductor. Cut approximately 3/4 through the dielectric then bend to break the dielectric loose.

5. Slide a 4-inch long Raychem WCSM 28/9 mm, or equal, on same cable end as the 12-inch length.

6. Trim center conductor to a length of 1-inch, crimp and solder using a Burndy "YSV," or equal, butt connector. Fill the cavity over the connector and between dielectric, with Scotch #23 tape. Dimension of fill shall be the same as dielectric diameter. Center 4-inch sleeve and heat-shrink.

7. Remove the temporary tape (step 4) and return the braided shield over the splice. The shield will overlap. Tape the ends to hold the shield tight against the previous splice sleeve, solder the overlapping shield halves all around to form a good electrical connection. Center and heat-shrink a 6-inch sleeve over the spliced braid.

8. Spiral rewrap the armored shield across the splice and bolt the overlapping ends. Use a No. 12 bolt and nut. Cut excess threads and tape over bolt and nut so there are no sharp projections.

9. Center and heat-shrink a 12-inch sleeve over the splice.

Procedures for other coaxial cables (RG-11A, etc.) shall be similar to that described for RG-164 except that sizes of tubing and butt connectors shall be appropriate for the cable to be spliced. To size tubing, select a size so the cable is between 20-80% of the expanded-to-contracted range of the tubing.

Approved splicing materials are Raychem Corporation's "WCSM, Sigmaform Corporation's "SST", or approved equal. Dimensions (ID expanded/ID recovered) are for Raychem materials. If materials are supplied by others or different size coaxial cables are used, size tubing accordingly.