FAA-E-2738A
November 17, 1988
Superseding
FAA-E-2738

U.S. Department of Transportation

Federal Aviation Administration

Specification

Radio Control Equipment (RCE)

CONTENTS

Paragraph	Title	Page
1.	SCOPE AND CLASSIFICATION	1
1.1	Scope	1
1.2	Classification	4
1.3	Definitions	4
2.	APPLICABLE DOCUMENTS	4
2.1	FAA Documents	4
2.1.1	FAA Specifications	4
2.1.2	FAA Standards	4
2.1.3	Other FAA Documents	5
2.2	Military and Federal Publications	5
2.2.1	Military Specifications	5
2.2.2	Military Standards	6
2.2.3	Other Military Documents	6
2.3	Other Standards	6
2.3.1	American National Standards Institute Standards	6
2.3.2	Industry Standards	7
2.3.3	Federal Standards	7
2.4	Precedence of Documents	7
3.	REQUIREMENTS	9
3.1	General Requirements	9
3.1.1	Equipment and Services to be Furnished by the Contractor	9
3.1.2	Government Furnished Equipment and Services	9
3.2	Equipment Characteristics	9
3.2.1	Functional Requirements	10
3.2.1.1	Operational Functions	10
3.2.1.2	Maintenance and Recovery Functions	16
3.2.2	Modularity Requirements	18
3.2.2.1	Modularity Concept	18
3.2.2.2	Sizes of Facilities	21
3.2.2.3	Module Types	21
3.2.2.4	Interfaces	21
3.3	Module Requirements	25
3.3.1	Type I Modules	25
3.3.1.1	Trunk Termination Module (Type IA1)	25
3.3.1.2	Filter and Modem Module (Type IA2)	34
3.3.1.3	Channel Control Module (Type IB2)	40
3.3.1.4	Radio Equipment Interface Module (Type IB1)	57
3.3.1.5	Trunk Restoral Switch and Audio Bridging Module (Type IC1)	58
3.3.1.6	Reserved	63
3.3.1.7	Reserved	63
3.3.1.8	Channel Configuration Controller Module (IE)	63
3.3.1.9	Master Configuration Controller Module (IF)	65
3.3.1.10	RMS/RMM Interface Module (Type IG)	67

CONTENTS (Cont'd)

Paragraph	Title	Page
3.3.2	Type II Modules	67
3.3.2.1	Trunk Termination Module (Type IIA1)	67
3.3.2.2	Filter and Modem Module (Type IIA2)	67
3.3.2.3	Channel Control Module (Type IIB2)	68
3.3.2.4	Voice Switching and Control System Interface Module (Type IIB1)	75
3.3.2.5	Trunk Restoral Switch and Audio Bridging Module (Type IIC1)	78
3.3.2.6	Reserved	78
3.3.2.7	Reserved	78
3.3.2.8	Channel Configuration Control Module (Type IIE)	78
3.3.2.9	Master Configuration Controller Module (Type IIF)	79
3.3.2.10	RMS/MPS Interface Module (Type IIG)	79
3.3.3	Other Special Modules	80
3.3.4	Typical Module Configuration	80
3.3.4.1	Basic VHF/UHF Selective or Split Channel	80
3.3.4.2	Two or More Basic Channels at a Control Facility	81
3.3.4.3	Two or More Basic Channels Combined on a Single Trunk	81
3.4	Data Interchange Requirements	81
3.4.1	General	81
3.4.1.1	Purpose of Data Interchange	81
3.4.1.2	Data Interchange Characteristics	84
3.4.2	RCE Functions and Message Characteristics	85
3.4.2.1	Operational and Control Functions	86
3.4.2.2	MPS Message Characteristics	96
3.4.3	Traffic Data	97
3.5	Software Design Requirements	98
3.5.1	Real-Time Quality Control (RTQC) Capability	98
3.5.2	Software Implementation	98
3.5.2.1	Executive	98
3.5.2.2	Program Structure	99
3.5.2.3	Program Language	99
3.5.2.4	Compiler	100
3.5.2.5	Adaptation	100
3.5.2.6	Maintenance Software	100
3.5.3	Software Documentation	100
3.5.3.1	Program Design Instructions	101
3.5.3.2	Executive Program	101
3.5.3.3	Functional Program Elements	101
3.5.3.4	Program Logic Instructions	102
3.5.3.5	Operator's Instructions	103
3.5.3.6	User's Manual	103
3.6	Maintenance Requirements	104
3.6.1	Maintenance Functions	104
3.6.2	Maintenance Hardware	105
3.6.3	Maintenance Software/Firmware	105

CONTENTS (Cont'd)

Paragraph	Title	Page
3.6.4	Test Equipment	106
3.6.4.1	Standard Test Equipment	106
3.6.4.2	Special Test Equipment	106
3.6.4.3	Maintenance Tools	106
3.6.5	Service Life	106
3.6.6	Environmental Requirements	107
3.7	Reliability and Maintainability Requirements	107
3.7.1	General	107
3.7.1.1	Reliability, Maintainability Definitions	107
3.7.2	Reliability Numerics	110
3.7.2.1	Mean-Time-To Restore (MTTR) Numerics	111
3.7.3	Reliability Program Plan	112
3.7.3.1	Reliability Management	112
3.7.3.2	Reliability Program Tasks	112
3.7.4	Maintainability Program Plan	117
3.7.4.1	Maintainability Management	117
3.7.4.2	Maintainability Demonstration	118
3.8	Physical Characteristics	118
3.8.1	Electrical Design	118
3.8.1.1	Ambient Conditions	118
3.8.1.2	Non-Operating Conditions	118
3.8.1.3	Module Removal and Insertion Damage	119
3.8.1.4	Printed Circuit Boards	119
3.8.1.5	Parts and Materials	119
3.8.1.6	Loss of Voltage	120
3.8.1.7	Solderless Wrapped Electrical Connections	120
3.8.1.8	Socket Requirements	120
3.8.2	Mechanical Design and Construction	120
3.8.2.1	Equipment Room Mechanical Layout	120
3.8.2.2	Cabinet and Enclosure Construction	121
3.8.2.3	Equipment Ventilation	122
3.8.2.4	Distribution Frames	122
3.8.2.5	Cabinet or Enclosure Prewiring	123
3.8.3	Cabling	124
3.8.3.1	Power Cables	124
3.8.4	Utilization of Commercial Equipment in RCE	124
3.8.4.1	Commercial Equipment Defined	124
3.8.4.2	Justification of Utilization	124
3.8.4.3	Inclusion in RCE Design	125
3.9	Power Requirements	125
3.9.1	General	125
3.9.2	RCE Type I Site Power Requirements	125
3.9.2.1	AC/DC Load Center Requirements	126
3.9.3	RCE Type II Site Power Requirements	130
3.9.3.1	RCE Type II Installation Powered from the GFE AC Load Center	130
3.10	System Performance Requirements	131
3.10.1	General	131
3.10.2	Audio Parameters	131

CONTENTS (Cont'd)

Paragraph	Title	Page
3.10.2.1	Impedance	132
3.10.2.2	Noise	132
3.10.2.3	Impulse Noise	132
3.10.2.4	Crosstalk	132
3.10.2.5	Frequency Response	132
3.10.2.6	Harmonic Distortion	133
3.10.2.7	Intermodulation Distortion	133
3.10.2.8	Audio Level Regulation	133
3.10.3	Data Parameters	133
3.10.3.1	Transparency	133
3.10.3.2	Data Rate	133
3.10.3.3	Signal Characteristics	133
3.10.3.4	Distortion	134
3.10.3.5	Error Rate	134
3.10.3.6	Switching Time	134
3.10.4	Functional Response to Messages	134
3.10.4.1	Response Time Verification	136
3.10.4.2	Temperature Tests	136
3.10.4.3	Noise Tests	136
3.10.5	Channel Recovery	137
3.10.5.1	Start Up	137
3.11	Factory Test Bed Requirements	137
3.11.1	Test Bed Design Requirements	138
3.11.2	First Article Module Test Bed Configurations	139
3.11.3	Production Module Test Bed Configurations	139
3.11.4	GFE and Services Applicable to the Test Bed	139
3.11.5	Test Bed Data Storage and Retrieval	139
3.12	Documentation	140
3.12.1	Instruction Manuals	140
3.12.2	Computer Programs	140
3.12.3	Site Installation, Cutover, Test and Checkout	140
3.12.4	Configuration Management	141
4.	QUALITY ASSURANCE	141
4.1	Test Planning	141
4.1.1	Factory Tests	142
4.1.1.1	Module Design Qualification Tests	142
4.1.1.2	Module Configuration Design Qualification Tests	143
4.1.1.3	Reliability Demonstration Testing	143
4.1.1.4	Maintainability Demonstration Testing	143
4.1.1.5	Production Testing	144
4.1.2	On-Site Tests	145
4.2	Electromagnetic Interference (EMI)	145
5.	PREPARATION FOR DELIVERY	146
5.1	Direct Shipment to a Site	146
5.1.1	Small Component Material	146

CONTENTS (Cont'd)

Paragraph	Title	Page
5.2	Material for Inventory Storage	146
5.3	Packing of Systems or Subsystems for Storage	146
6.	NOTES	146
6.1	Note on Information Items	146
6.2	The Following Documents are Listed for Reference and Information Purposes:	146
APPENDIX A:	GLOSSARY	A-1
APPENDIX B:	RADIO CONTROL EQUIPMENT/COMMON VOICE SWITCHING AND CONTROL EQUIPMENT INTERFACE REQUIREMENTS RCE-540-006	B-1
APPENDIX C:	RADIO CONTROL EQUIPMENT/SOLID STATE RADIO EQUIPMENT INTERFACE REQUIREMENTS RCE-540-001	C-1
APPENDIX D:	RADIO CONTROL EQUIPMENT/REMOTE MAINTENANCE MONITORING SYSTEM INTERFACE REQUIREMENTS RCE-540-004	D-1

LIST OF ILLUSTRATIONS

Figure number		Page
Figure 1	Modularity Concept	19
Figure 2	Typical Module Configuration for a Single Channel	20
Figure 3	IA1 Module Interconnections Without a IC1 Module	32
Figure 4	IA1 Module Interconnections with a IC1 Module in the Site Configuration	33
Figure 5	IA2 Module Element Functional Configuration Illustration	36
Figure 6	Module IB2 - IB1 Remoting Circuits and Application	59
Figure 7	Basic VHF/UHF Channel Configuration	60
Figure 8	Illustrative Example of a Typical Site Channel Configuration (1 Split Channel, 1 Selective Channel and One Spare Trunk)	61
Figure 9	2 and up to 6 IB2 Modules on a Single Trunk Radio Site Configuration	82
Figure 10	2 and up to 6 IIB2 Modules on a Single Trunk Control Facility Configuration	83
Figure 11	Suggested Message Format (Short)	87
Figure 12	Suggested Message Format (Long)	89

LIST OF TABLES

Table Number		Page
Table 1	Summary of Major FAA Control and Remote Facilities Applicable to RCE	3
Table 2	RCE Sizing - Design Requirements	22
Table 3	RCE Module Nomenclature	23
Table 4	RCE Interfaces	24
Table 5	RCE Module Sizing Requirements	26
Table 6	Line Sensor Alarm Threshold	31
Table 7	IB2 - IB1 Module Interfaces Electrical Characteristics	42
Table 8	IB2 - IA2 Module Interfaces --Electrical Characteristics--	48
Table 9	Decoding and Correlation of Line Sensor Alarms	51
Table 10	IIB2 - IIB1 Module Interfaces - Electrical Characteristics	70
Table 11	IIA2 - Module Configurations Required in Response to Trunk Failure Conditions	76
Table 12	RCE Message Rate	97
Table 13	Minimum RCE MTBF Requirements (Note)	111
Table 14	Maximum RCE MTTR Requirements (Note)	112
Table 15	Functional Message Response Time	135

Department of Transportation
Federal Aviation Administration
Specification

RADIO CONTROL EQUIPMENT (RCE)

1. SCOPE AND CLASSIFICATION

1.1 Scope - This specification defines the equipment to be provided as a replacement of the existing voice frequency signaling and control equipment (tone) utilized in voice radio air/ground Air Traffic Control (ATC) and Flight Service Stations (FSS) operations. The new radio control equipment (RCE) will have the capability to be installed at en route, terminal and FSS control facilities and their associated air/ground radio sites on a channel by channel basis, provide ability to interface with Remote Maintenance Monitoring (RMM) sensors at radio sites, and provide Remote Monitoring Subsystem (RMS) capability. At the remote air/ground radio sites where air/ground radio communications are provided, the RCE channel will interface with existing solid state radio transmitters and receivers, and the transmission facilities which connect these sites to the control facility. At the control facilities the RCE channel will interface with transmission facilities, existing relay panels and patch panels associated with four channel equipment installed in en route and terminal facilities, the Integrated Communications Switching System (ICSS) installed in terminal and Automated Flight Service Station (AFSS) facilities, and the Voice Switching and Control System (VSCS) which will later replace the four channel equipment and existing 300 and 301 type switching systems. The RCE will be designed as a basic

set of modules which can be configured to interface with these systems and the radio site transmitters and receivers and provide the channel signaling and control functions listed below:

(a) Selective or split push-to-talk radio transmitter keying control

(b) Push-to-talk (PTT) confirmation signaling

(c) Main/standby control signaling (radio transmitters and receivers)

(d) Remote receiver selective muting control signaling

(e) Standard interfaces with voice switching and control equipment at control facilities and solid state radio transmitters and receivers at remote sites

(f) Dual control of a frequency by two control facilities with override provisions

(g) Standard interfaces with RMM equipment

(h) External tone and high level noise suppression

(i) Digital signaling and control techniques in place of existing tone signaling and relay control techniques

(j) Standard audio transmit and receive levels and standard transmission line interfaces

(k) Automatic channel recovery from trunk failures.

In addition to the above channel functions, the RCE will provide the capability to bridge up to six (6) radio channels on a single trunk. Use of the digital signal and control technique covered in Section 3.4 will eliminate the need for specially conditioned lines required by the current tone equipment and provide an improvement of approximately 10:1 in PTT time delay. The reliability and maintainability design requirements of an RCE channel will be consistent with the objectives of FAA Order 6000.30, Maintenance Policy for the 80s. The RCE will also eliminate other deficiencies of the existing tone/relay equipment such as false transfers of radio from main to standby equipment and lack of main/standby selection confirmation.

The types and quantities of remote and control facilities where RCE may be installed are as indicated in Table 1.

TABLE 1

SUMMARY OF MAJOR FAA
CONTROL AND REMOTE FACILITIES
APPLICABLE TO RCE

Type of Facility	Approximate Number of Existing Facilities	Approximate Average Number of Channels per Facility
Type II Control Facilities		
Air Route Traffic Control Center (ARTCC)	24	54
Terminal Radar Approach Control (TRACON)	175	12
Airport Traffic Control Tower (ATCT)	465	6
Automated Flight Service Station (AFSS)	61	28
Area Control Facility (ACF)	22 (future)	50
Type I Remote Radio Facilities		
Remote Communication Air/Ground Site (RCAG)	558	2.5
Remote Radio Transmitter/ Receiver Site (RTR)	733	6*
FSS Remote Communications Outlet (RCO)	1014	1.7
Remote Communications Facility (RCF)	650 (future)	12(future)

*Includes both TRACON and Tower channels.

The modularity concept of the RCE will provide standard interchangeable channel modules which can be utilized at any type of remote site and any type of control facility. In addition to the RCE technical functional and modularity requirements, this specification also includes requirements for reliability and maintainability, physical characteristics, performance, factory test bed, deliverable documentation, DC power supplies for remote sites with a 4 hour battery reserve capability, and quality assurance provisions.

1.2 Classification - RCE modules will consist of the following types:

Type I - Radio Site Modules
Type II - Control Facility Modules

The module identifications and applications required under each type and the sizing characteristics involved for each application are defined and specified in Sections 3.2.2 and 3.3.

1.3 Definitions - Definitions of terms and acronyms as used in this specification are further provided in Appendix A.

2. APPLICABLE DOCUMENTS

2.1 FAA Documents - The following FAA specifications, standards, drawings and National Airspace System (NAS) configuration management documents of the issues in effect on the date of the request for proposals, unless otherwise stated in the document listing, form a part of this specification and are applicable to the extent specified herein.

2.1.1 FAA Specifications -

FAA-D-2494/b	Technical Instruction Book Manuscript: Electronic, Electrical, and Mechanical Equipment, Requirements for Preparation of Manuscript, and Production of Books
FAA-E-2290	Control Equipment-Radio Channel
FAA-G-2100	Electronic Equipment--General Requirements

2.1.2 FAA Standards -

FAA-STD-002	Engineering Drawings
FAA-STD-016	Quality Control System Requirements
FAA-STD-018	Computer Software Quality Program Requirements

FAA-STD-020	Transient Protection, Grounding, Bonding and Shielding Requirements for Equipment
FAA-STD-021	Configuration Management, Contractor Requirements
FAA-STD-025	Preparation Of Interface Control Documents

2.1.3 Other FAA Documents -

NAS-IR-41024201	Interface Requirements Document Voice Switching and Control System to Radio Control Equipment
NAS-IR-41024202	Interface Requirements Document Tower Communication System (TCS)/Radio Control Equipment (RCE)
NAS-MD-790	Remote Maintenance Monitoring System Interface Control Document, Maintenance Processor Subsystem To Remote Monitoring Subsystems and Remote Monitoring Subsystem Concentrators
NAS-MD-792	Operational Requirements for the Remote Maintenance Monitoring System (RMMS)
FAA-Order 1800.8	National Airspace System Configuration Management
FAA Order 6000.30	Maintenance Policy of the 80s
FAA Order 6470.29	Maintenance of En Route Air/Ground Communication Facilities.

2.2 Military and Federal Publications - The following Military publications, of the issue in effect on the date of the request for proposals, form a part of this specification and are applicable to the extent specified herein.

2.2.1 Military Specifications -

MIL-E-17555	Electronic and Electrical Equipment, Accessories and Repair Parts; Packaging and Packing of
MIL-G-45204	Gold Plating, Electrodeposited
MIL-S-83734E	Sockets, Plug-in Electronic Components, Dual-in-Line (DIPS) and Single-In-Line Packages (SIPS), General Specification For

2.2.2 Military Standards -

MIL-STD-454	Standard General Requirements for Electronic Equipment
MIL-STD-461	Electronic Emission and Susceptibility Requirements for the Control of Electromagnetic Interference
MIL-STD-462	Electromagnetic Interference Characteristics, Measurement of
MIL-STD-470	Maintainability Program Requirements
MIL-STD-471	Maintainability Demonstration
MIL-STD-721	Definition of Effectiveness--Terms for Reliability, Maintainability, Human Factors, and Safety
MIL-STD-781	Reliability Tests, Exponential Distribution
MIL-STD-785	Reliability Program for Systems and Equipment Development and Production

2.2.3 Other Military Documents -

MIL-HDBK-217	Reliability Stress and Failure Rate Data for Electronic Equipment
MIL-HDBK-472	Maintainability Prediction
TR-74-268	RADC Nonelectronic Notebook

2.3 Other Standards - The following standards, of the issue in effect on the date of the request for proposals, form a part of this specification and are applicable to the extent specified herein.

2.3.1 American National Standards Institute (ANSI) Standards -

ANSI X3.4	American National Standard Code for Information Interchange
ANSI X3.5	Flow Chart Symbols and Their Usage in Information Processing

ANSI X3.28	American National Standard Procedures for the Use of the Communication Control Characters of American National Standard Code for Information Interchange in Specified Data Communication Links

2.3.2 Industry Standards -

EIA-RS-232	Interface between Data Terminal Equipment and Data Communication Equipment Employing Serial Binary Data Interchange
EIA-RS-363	Standard for Specifying Signal Quality for Transmitting and Receiving Data Processing Terminal Equipment Using Serial Data Transmission at the Interface with Nonsynchronous Data Communication Equipment
EIA-RS-404	Standard for Start-Stop Signal Quality Between Terminal Equipment and Non-Synchronous Data Communication Equipment
EIA-RS-422	Electrical Characteristics of Balanced Voltage Digital Interface Circuits
EIA-RS-423	Electrical Characteristics of Unbalanced Voltage Digital Interface Circuits
NFPA-70	National Electrical Code

2.3.3 Federal Standards -

FED-STD-1010	Telecommunications: Bit Sequencing of the American National Standard Code for Information Interchange in Serial-by-Bit Transmission

2.4 Precedence of Documents - If requirements of the contract, this specification or subsidiary documents, are in conflict the following precedence shall apply:

(a) Contract - The contract shall have precedence over all other documents

(b) Specification - This specification shall have precedence over all documents referenced herein

(c) Applicable Documents - Any applicable document referenced herein shall have precedence over all subsidiary documents reference therein.

(Copies of this specification and other applicable FAA specifications, standards, drawings and other documents may be obtained from the Contracting Officer in the Federal Aviation Administration Office issuing the invitation for bids or request for proposals. Requests should fully identify material desired, i.e., specification, standard, amendment, and drawing numbers and dates. Requests should cite the invitation for bids, request for proposals, or the contract involved or other use to be made of the requested material.)

(Single copies of applicable federal and military specifications, standards, and other documents may be obtained by ordering through the Naval Publications and Forms Center (NPFC), Philadelphia, which is the Department of Defense Single Stock Print (DOD-SSP) and distribution center for unclassified specifications and standards. Documents may be ordered by writing: Naval Publications and Forms Center, 5801 Tabor Avenue, Philadelphia, Pennsylvania 29120; or calling: Area Code: 215, 697-3321, Monday through Friday, from 8 a.m. to 4:30 p.m. (Philadelphia time).)
(Copies of American National Standards Institute (ANSI) standards may be obtained from American National Standards Institute, Inc., 1430 Broadway, New York, NY 10018.)

(Copies of Electronic Industries Association (EIA) specifications may be obtained from Electronic Industries Association, Engineering Department, 2001 Eye Street, N. W., Washington, DC 20006.)

(Information on obtaining copies of the National Electrical code may be obtained from the National Fire Protection Association, (NFPA) 60 Batterymarch Street, Boston, Massachusetts 02110).

(Federal standards are available from the Government Services Administration (GSA), acting as agent for the Superintendent of Documents. A copy for bidding and contracting purposes is available from GSA Business Services Centers. Copies are for sale at the GSA, Specification Consumer Information Distribution Branch, Building 197, (Washington Navy Yard), Washington, DC 20407 for 25 cents each.)

3. REQUIREMENTS

3.1 General Requirements - The Radio Control Equipment (RCE) shall be designed and constructed to ensure compliance with all the requirements contained herein and in the contract schedule.

3.1.1 Equipment and Services to be Furnished by the Contractor - The contractor shall provide all necessary engineering, management, services, and materials required to design, construct, fabricate, test, deliver, and install complete operational RCE channels and channel configurations at FAA Air Traffic Control (ATC) and Flight Service control facilities and their associated air/ground communication radio sites. Table 1 identifies the types and quantities of control facilities (Type II) and radio communication sites (Type I) where RCE modules may be installed. Overall RCE channel design and functional requirements are covered in section 3.2. Specific functional and sizing requirements for RCE modules are covered in section 3.3. The deliverable equipment, services and documentation shall be furnished in accordance with the contract schedule and the requirements contained herein.

3.1.2 Government Furnished Equipment and Services - Government furnished equipment, documentation and services will be in accordance with the contract schedule and section 3.11 of this specification.

3.2 Equipment Characteristics - The RCE shall be designed to replace the existing radio tone signaling and control equipment currently used in en route, terminal and flight service air/ground communication operations. The existing tone signaling and control equipment is designed to be utilized on a channel-by-channel basis. The RCE, therefore, shall also be designed to have the capability to be installed and operated on a channel-by-channel basis. The RCE shall consist of standard interchangeable modules which can be configured to provide the required channel functions. An RCE air/ground communication channel shall provide an interconnection between the position's voice switching and radio control equipment (i.e., 300 system and associated four channel equipment, ICSS, VSCS and TCS) and the remote transmitters and receivers controlled by the position equipment supported by those switching systems. The RCE channel shall respond to control actions initiated by ATC controllers or flight service specialists in accordance with 3.2.1 and provide both audio and control signals to and from the remote radio equipment and the control facility's voice switching system. An RCE channel shall have the following characteristics as further defined in 3.2.2, 3.3 and 3.4.

(a) Simultaneous 2-way transmission of voice and 300 baud monitoring and control signals.

(b) Alternative transmission of 1200 baud control signals from a control facility to a remote facility without simultaneous voice transmission.

(c) Automatic transfer between voice with 300 baud data mode and 1200 baud data only mode.

The construction of RCE channels shall be in accordance with the modularity requirements covered in 3.2.2 and shall provide standard compatible interfaces with position voice-switching systems, radio equipment, transmission lines, and elements of the Remote Maintenance Monitoring System (RMMS).

3.2.1 Functional Requirements - Each RCE channel shall provide the following operational and maintenance and recovery functions. Operational functions shall consist of radio frequency selective pairing or split frequency operation; push-to-talk, push-to-talk confirmation, push-to-talk release; audio transmit; audio receive; main/standby transmitter and receiver selection; remote transceiver tuning; remote receiver selective muting; multiple channels on a single trunk; trunk lockout; and dual control site frequency override. Maintenance and recovery functions shall consist of automatic split/selective recovery, automatic trunk restoral, remote loop back, order wire, and RMMS capability. Detail requirements for each function are specified in the following subparagraphs.

3.2.1.1 Operational Functions -

3.2.1.1.1 Radio Frequency Selective and Split Operation - The RCE modules shall be configured into functional channels as specified in 3.2, above, in such a manner that each channel may be operated in a split frequency or selective frequency mode. Split mode operation shall permit operation of two assigned frequencies using one 4-wire trunk for each frequency, with independent signaling and control functions and audio on each trunk. In this mode it shall be possible to selectively key either transmitter or both transmitters simultaneously. Also it shall provide for receiving audio from either receiver or both receivers simultaneously. Any channel configuration at a Type II facility shall have the capability to operate with either a single site or separate sites in the split mode of operation with each frequency assigned to the split mode capable of operating simultaneously on a non-interfering basis. The selective mode shall provide the same functions as the split mode

except that both frequencies shall utilize one 4-wire trunk and one common data channel for signaling and control functions, instead of two. Selection of either mode shall be as determined by site adaptation data and the contract schedule. A channel operating in the split frequency mode with both of the frequencies provided at the same remote site shall have the capability to automatically recover from a failed trunk condition by shifting to the selective mode as required under paragraph 3.2.1.2.1.

3.2.1.1.2 Push-to-Talk Function - The push-to-talk function shall consist of transmission of push-to-talk signals to the remote site, return of push-to-talk confirmation signals, transmission of audio to the remote site, generation of lockout signals, push-to-talk trunk override capability, and push-to-talk release including automatic release in the event of trunk failure as specified in the following subparagraphs.

3.2.1.1.2.1 Push-to-Talk Signals - The voice switching and control equipment shall provide a push-to-talk status signal at the frequency interface with the RCE channel in accordance with Appendix B. The RCE shall encode this status signal and transmit it to the remote site at 1200 bauds in accordance with the data interchange requirements stated in 3.4. At the remote site the RCE shall decode this signal and provide a transmitter keying signal to the selected transmitter and mute the associated receiver via the RCE radio interface specified in Appendix C. The keying signal shall remain in the keying state until a PTT release signal is received from the control facility. The RCE shall recognize the end of the push-to-talk status signal from the voice switching and control equipment interface and encode this signal for transmission to the remote site at 1200 bauds as specified in 3.4. At the remote site, the RCE shall decode this signal and release the transmitter keying signal(s) and unmute the associated receiver(s). In the event of channel failure, including a trunk failure, as defined in 3.3, the transmitter keying signal(s) shall be automatically released and the associated receiver(s) unmuted. The RCE data interchange requirement at 1200 bauds for the PTT signal shall include the capability to selectively key either or both of the frequencies assigned to the channel in both the selective and split modes of operation. In the case where up to six (6) channels are assigned to a trunk (up to twelve frequencies) the RCE shall provide the capability to selectively key the associated transmitters in any combination using a common data transmission format as specified in 3.4.

3.2.1.1.2.2 Push-to-Talk Confirmation - The RCE equipment at the remote site shall recognize the combination of a keying signal and a squelch break condition at the associated receiver's interface as

specified in 3.3 and Appendix C, encode this combination as a PTT confirmation signal and return the resulting signal to the control facility at 300 bauds as specified in 3.4. At the control facility the RCE shall decode this signal and provide a PTT confirmation signal to the voice switching and control equipment channel interface in accordance with Appendix B. This signal shall remain until an encoded signal is received from the remote site indicating the end of the confirmation. When the conditions that caused the confirmation at the remote site terminate, as a result of PTT termination on a transmitter or receiver failure, the Type I RCE shall generate an encoded signal to indicate the end of PTT confirmation, as specified in 3.4. This signal shall be transmitted to the Type II facility at 300 bauds. Upon recognition of this signal, the Type II RCE shall remove the PTT confirmation signal(s) on the voice switching and control equipment interface. A trunk failure shall also cause termination of this PTT confirmation signal.

Where multiple frequencies are assigned to the same trunk, the RCE shall recognize the combination of keying signal and squelch break on multiple frequencies when multiple frequencies are simultaneously keyed, encode the combination of frequencies for transmission to the control facility, and at the control facility shall simultaneously provide confirmation signals to indicate which frequencies are actually keyed.

3.2.1.1.2.3 Trunk Lockout - At control facilities where more than one radio position may access their remote radio frequencies through the same trunk, a trunk lockout capability shall be provided to assure that two or more positions do not gain simultaneous access to the trunk. Upon recognition of the PTT confirmation encoded signal from the remote facility, the Type II RCE shall apply a trunk lockout signal to the voice switching and control equipment interface (Appendix B) for each frequency sharing the trunk except those that are actually being keyed, as identified in the encoded PTT confirmation signal. These lockout signals shall remain until released by an encoded signal indicating the end of PTT confirmation or a trunk failure indication. The trunk lockout shall not preclude a single position's ability to transmit simultaneously on multiple frequencies assigned to the same trunk. The capability to establish a trunk lockout condition for all channels connected to the trunk in the event that the trunk has failed and remains in the failed condition for more than 3 seconds, shall also be provided.

3.2.1.1.2.4 Frequency Override - For installations requiring that multiple control facilities have access to the same transmitter/ receiver combinations at a remote radio site, a lockout and

override feature shall be provided to assure that a facility can not access a frequency already in use unless it has been programmed for override. Upon recognition of the conditions for PTT confirmation, the Type I RCE shall return an encoded PTT confirmation signal to the facility originating the transmission as previously described, an encoded frequency lockout signal to any other Type II facility sharing the frequency which is not assigned an override capability through adaptation data, and an encoded PTT confirmation signal to any Type II facility sharing the frequency which is programmed to have override capability. The Type II facility shall return either the frequency lockout signal or a PTT confirmation signal to the voice switching and control equipment interface as determined by the encoded signal received.

A PTT attempt from a Type II facility where frequency lockout is in effect shall be inhibited and shall have no effect on the current transmission. A PTT attempt from a Type II facility where the PTT confirmation is in effect shall be encoded and sent to the Type I facility as previously described, shall take control of the assigned transmitter, and shall cause the frequency lockout signal to be returned to the overridden Type II facility, thereby releasing its control.

3.2.1.1.2.5 Audio Transmit - The RCE shall provide an audio path from the voice switching system interface with RCE for each frequency in accordance with Appendix B. The RCE shall transmit the audio signal to the remote site transmitter(s) audio input via the audio RCE radio transmitter interface(s) specified in Appendix C. The audio characteristics required for each RCE module contained in a channel configuration shall be in accordance with 3.3. When two or more channels are connected to the same trunk, the RCE at both the Type II and Type I facilities shall bridge the channel audio paths onto the single trunk. At the Type II facility, each frequency assigned to the channel so bridged shall interface with the voice switching and control equipment in accordance with Appendix B. At the Type I facility, each frequency on the channel so bridged shall interface with the corresponding radio equipment in accordance with Appendix C. Simultaneous audio transmission on a single trunk from the bridged audio connection shall be controlled by the trunk lockout feature specified in paragraph 3.2.1.1.2.3.

3.2.1.1.3 Audio Receive - In the absence of an RF signal, the output of each receiver will normally be muted off and the absence of squelch break signal at the interface (Appendix C) will indicate that no signal is being received. Under these conditions, the associated audio circuits in the Type II RCE shall be muted to

eliminate any objectionable trunk noise. Upon receipt of an RF signal, the receiver will generate a squelch break signal at the Type I RCE interface. Upon recognition of this signal, in the absence of a transmitter keying signal, the Type I RCE shall generate a coded squelch break signal and transmit it to the associated Type II facility(ies) over the trunk(s) associated with that frequency. This transmission shall take place at 300 bauds as indicated in 3.4. The encoded message shall include information in its coded structure to identify the frequency involved. The Type II RCE shall recognize the encoded squelch break signal and unmute the audio channel to the voice switching and control equipment for the indicated frequency. The audio shall remain in an unmuted state until another encoded signal is received upon recognition of the end of the squelch break condition at the receiver.

The RCE channel shall transmit the audio signals to the control facility bridged on one trunk, if in the selective mode, or independently on two trunks if in the split mode. For multi-frequency trunks, the audio output from up to twelve (12) receivers shall be bridged to the common trunk. At the Type II RCE, the bridged audio shall be gated to the voice switching and control equipment frequency interface(s) identified by the squelch break signal(s).

3.2.1.1.4 Remote Receiver Selective Muting - The voice switching and control equipment will present remote muting orders from the position operators to the Type II RCE interface. These will be in the form of separate signals, one for each assigned frequency as specified in Appendix B. The Type II RCE shall encode these signals when they appear, and transmit them to the Type I RCE at 1200 bauds as described in 3.4. The Type I RCE shall decode the information and locally mute the audio signal returning from the receiver on the indicated frequency(ies).

When the mute condition goes into effect, the Type I RCE shall generate an encoded message and transmit it to the corresponding Type II RCE at 300 bauds as indicated in 3.4. The Type II RCE shall convert to a signal on the indicated frequency interface to the voice switching and control equipment, as specified in Appendix C, for display at the operating position, to provide a receiver muted indication.

A mute condition shall be terminated when the mute signal from the voice switching and control equipment is removed. Removal of this signal shall cause the Type II RCE to generate an encoded message indicating termination of the function and identifying the frequency

involved, and shall transmit it via the assigned channel to the Type I RCE at 1200 bauds. The Type I RCE shall recognize this encoded message and terminate the mute condition for that frequency. Upon termination of the mute condition, the Type I RCE shall encode a message indicating such action and shall transmit it to the Type II RCE which shall remove the mute indication signal to the voice switching and control equipment interface.

3.2.1.1.5 Main/Standby Selection Control Signaling - Normally two transmitters and two receivers are assigned to each required frequency at a remote radio site. One transmitter and one receiver are assigned as main equipments, the second units remain in a standby capacity to be brought into service under control of the voice switching and control equipment or by maintenance action at the Type II or Type I maintenance panels. The RCE shall provide the means for transferring operation from one transmitter or receiver to the other as directed from the control (Type II) facility or the site maintenance panel.

The voice switching and control equipment will provide a transmitter main/standby control signal and a receiver main/standby control signal to the Type II RCE for each assigned radio frequency as specified in Appendix B. Upon a change of a transmitter main/standby control signal from one state to the other, the Type II RCE shall encode this information and transmit it to the Type I RCE at 1200 bauds as specified in 3.4. The Type I RCE shall recognize this coded information and provide a signal on the appropriate transmitter interface as specified in Appendix C to cause activation of the other transmitter and antenna switchover. A response signal from the transmitters will indicate which unit is activated. Upon change of this signal, the Type I RCE shall encode the signal and transmit it to the Type II RCE at 300 bauds as indicated in 3.4. The Type II RCE shall recognize this coded sequence and produce a signal to the voice switching and control equipment, as indicated in Appendix B, to indicate which transmitter is in service. Similar command and response functions shall be provided for receivers.

3.2.1.1.6 Remote Transceiver Tuning - Some air/ground radio equipment includes the capability to be tuned to allow operation at any of a number of frequencies rather than a single preassigned frequency. Such equipment must be controlled by special equipment at both the site and control facility. Any Type II RCE channel which is associated with a remote tunable transceiver shall accept a tuning command from the voice switching and control equipment as specified in Appendix B. The tuning command shall consist of a

control signal and digital identification of the desired frequency as specified in 3.4 and Appendix B. The Type II RCE shall encode the command, including a digital sequence representing the frequency identification, and transmit it to the corresponding Type I RCE at 1200 bauds as specified in 3.4. The Type I RCE shall recognize this digital sequence and provide a signal, including the digital frequency identification, to the tunable transceiver as specified in Appendix C.

While it is in its tuning cycle, the tunable transceiver will provide a signal to the Type I RCE to indicate that the transceiver is not ready, as specified in Appendix C. The Type I RCE shall recognize the "transceiver not ready" signal, encode the signal and transmit it to the Type II RCE at 300 bauds as specified in 3.4. The Type II RCE shall recognize this coded sequence and generate a signal to the voice switching and control equipment in accordance with Appendix B, to indicate that the remote transceiver is not ready. When the tuning cycle is complete and the transceiver is ready, it will present a "transceiver ready" signal, as specified in Appendix C. The Type I RCE shall recognize this signal, generate the appropriate encoded signal and transmit it to the Type II RCE at 300 bauds as described in 3.4. The Type II RCE shall recognize this coded signal and generate a signal to the voice switching and control equipment to indicate that the transceiver has completed its tuning cycle and is ready for operation. This signal shall be as specified in Appendix B.

3.2.1.1.7 Multiple Channels on a Single Trunk - The RCE shall be capable of operation in a variety of configurations as specified in 3.2.2 below. Some of these configurations involve the use of a single trunk for up to six (6) channels (12 frequencies). The logical design of the functional interfaces and the design of the encoded signals between facilities shall provide each of the functional requirements listed herein on a frequency by frequency basis and simultaneous operation on multiple frequencies for combinations up to 12 frequencies per trunk.

3.2.1.2 Maintenance and Recovery Functions - The RCE shall have the capability required to monitor and provide fault alarms for all module configurations, including trunks on a continuous basis. Upon detection of failures, the RCE shall automatically provide alarms at the control facility maintenance panel for both Type II and Type I equipment and trunks. For trunk failures, the RCE shall automatically perform reconfiguration action required to restore the affected channels. A remote loop back function and an order wire capability shall be provided to support the isolation of failures and corrective action. The RCE shall support the RMS function by

providing a data path for the exchange of RMM data as specified in 3.3 and 3.4. Maintenance features shall be provided as specified in 3.6. Reliability and maintainability design requirements shall be as specified in 3.7.

3.2.1.2.1 Recovery from Trunk Failure - The RCE shall provide the capability to monitor each trunk and detect failures as described in 3.3. Upon detection of a trunk failure the RCE shall have the capability to automatically take one of the following actions: 1) combine both frequencies served by a channel operating in the split mode onto the remaining trunk and operate in the selective mode, 2) switch to a spare trunk, if so configured, or 3) combine multiple channels (up to a maximum of six) onto a single trunk. Adaptation data at each facility shall include the restoral action to be taken for each potential failure condition and shall provide for multiple failures as well as single failures. The adaptation data shall be coordinated between both the Type I facility and the Type II facility to which it is connected, to assure that corresponding action will take place at both ends of the channel. In addition, the RCE shall provide appropriate alarm and status information to the maintenance panels at both the Type I and Type II facilities to indicate the failure detected and the status of the recovery action.

3.2.1.2.2 Remote Loop-back - Each of the RCE modules that serves as a path for voice and/or data signals shall include a remote loop-back capability as specified in 3.3. Loop-back at any module shall be initiated and terminated by command from the control facility maintenance panel. The capability to insert, transmit, receive and measure test signals (tones and data) shall be provided at the maintenance panel at the control facility. Loop-back testing will normally be conducted with a trunk off-line; however, if loop-back is performed on an on-line trunk, it shall be terminated automatically by a PTT signal.

3.2.1.2.3 Order Wire - An order wire feature shall be included in the RCE to provide a voice communication capability between the maintenance panels at the interconnected Type I and Type II facilities. The order wire connections shall be initiated either from the maintenance panel at a Type I facility by taking the order wire handset off hook, or from the Type II facility maintenance panel by selecting the desired remote facility. Upon initiation, the order wire capability shall be automatically provided via a spare trunk or a trunk freed by either shifting a channel from split mode to selective mode or combining multiple channels on a trunk.

The specific steps to be taken to provide the order wire at each facility shall be included in the adaptation data. The adaptation data shall include alternatives to provide the order wire capability despite single or multiple trunk failures as long as at least one trunk remains operational.

3.2.1.2.4 Remote Maintenance Monitoring Capability - A complete remote maintenance monitoring capability shall be provided by the RCE. Each channel shall include the capability to monitor sensors associated with the remote radio transmitters and receivers, organize the data, and transmit it to the control site for delivery to a Maintenance Processor Subsystem (MPS) or a Remote Maintenance Monitoring System concentrator in response to polling messages from the MPS, as specified in NAS-MD-790 and Appendix D of this specification. The data rate for interface with the MPS shall be 2400 bits per second.

3.2.2 Modularity Requirements - The RCE shall consist of a family of standard interchangeable modules that may be assembled in various configurations to provide all functions specified in 3.2.1.

3.2.2.1 Modularity Concept - The modularity concept of the RCE is illustrated in Figure 1. Channels shall be comprised of modules designed to meet the functional requirements specified in 3.2.1 for each type of facility and over the range of sizes specified below.

Type II RCE modules shall be designed to operate in the following types of control facilities: ARTCCs, TRACONs, Towers and AFSSs and ACFs. The RCE at these facilities shall provide interfaces with existing position equipment, voice switching and control systems (ICSS, TCS and VSCS) and RMS/MPS equipment on the facility side, and standard voice band width transmission facilities on the trunk side, through the use of specific interface modules.

Type I RCE modules shall operate in remote air/ground radio sites, including RCAGs, RCOs, RTRs and consolidated air/ground radio sites. At these facilities the RCE shall interface with radio transmitters and receivers and RMS equipment or RMM sensors as well as the voice band width transmission facilities, also through interface modules.

All modules shall be interchangeable within each category listed in Table 3, for application at any Type II or Type I facility, i.e., a IA1 may be utilized at any Type I facility and a IIA1 module can be used at any Type II facility.

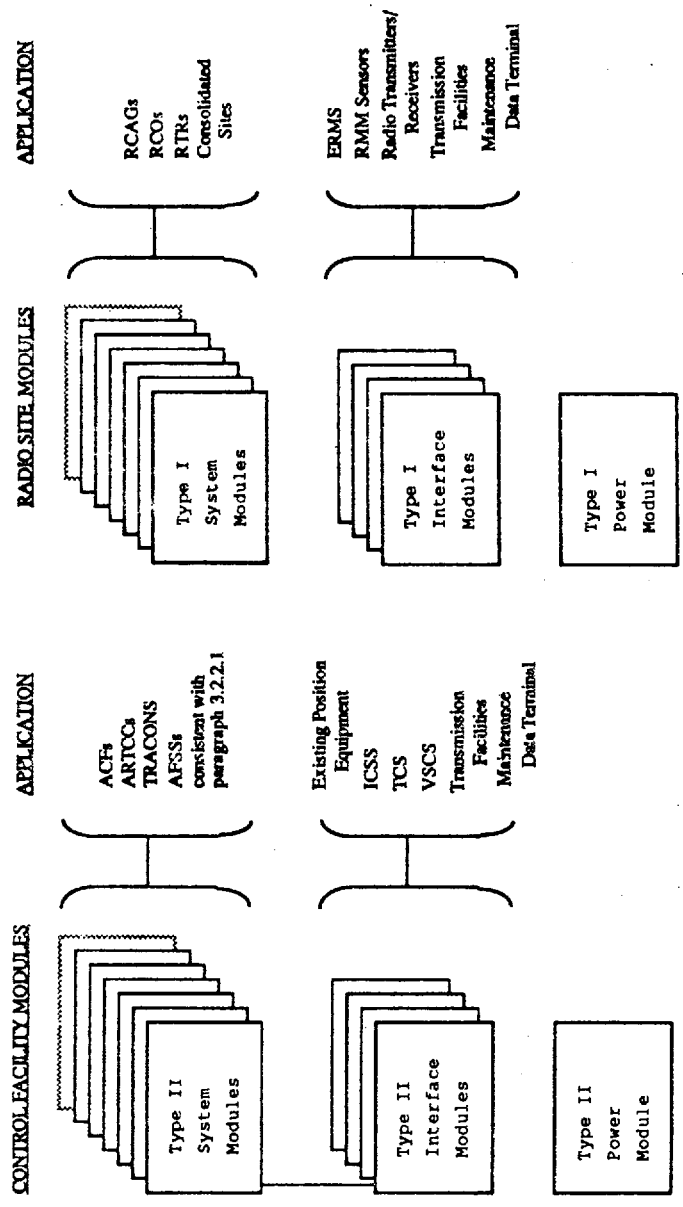

FIGURE 1
MODULARITY CONCEPT

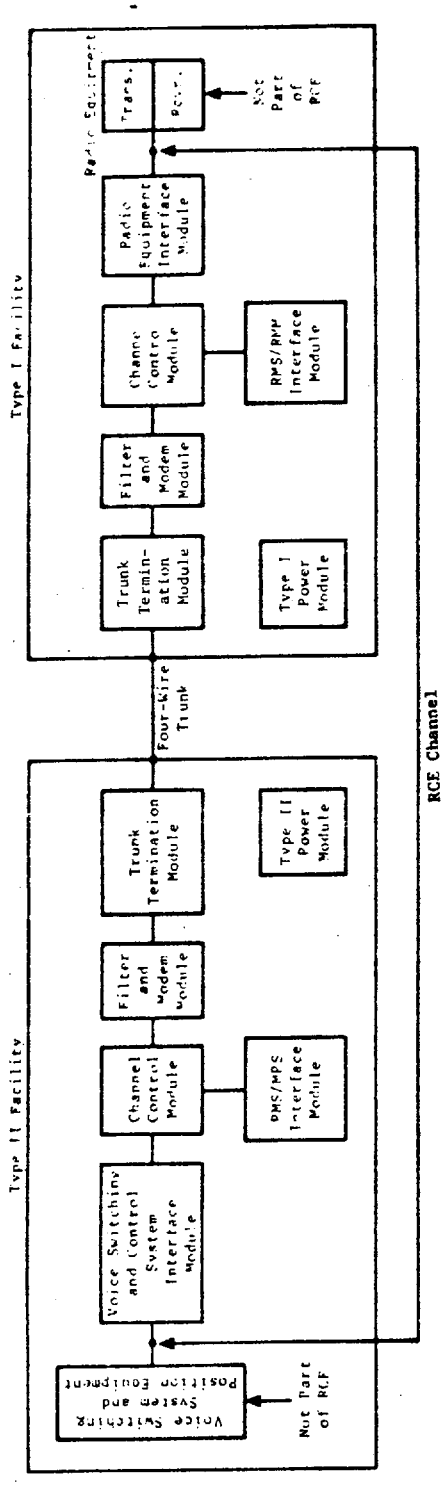

FIGURE 2

TYPICAL MODULE CONFIGURATION
FOR A SINGLE CHANNEL

A typical configuration of modules required to implement a single RCE channel is illustrated in Figure 2. This figure indicates the functional role and the relationship of the various modules.

3.2.2.2 Sizes of Facilities - The size ranges for the various facility types are given in Table 2. For control facilities (Type II facilities) the table indicates the size range by giving the maximum and minimum number of channels to be accommodated. The largest and smallest number of remote sites and the type of such sites are also shown.

For remote air/ground radio facilities (Type I facilities) the table indicates the largest and smallest of such sites by indicating numbers of transmitters and receivers.

3.2.2.3 Module Types - The module types required to implement any anticipated RCE installation are listed in Table 3. This table identifies the modules by their function and gives the designation used throughout this specification.

3.2.2.4 Interfaces - The RCE shall include interfaces with solid state radio transmitters, receivers, and antenna transfer relays. The RCE DC power subsystem specified in Section 3.9 shall supply DC power to both RCE equipment and the radio equipment. In addition, it shall interface the Environmental Remote Monitoring Subsystem (ERMS) if the remote site is so equipped, or remote monitoring sensors at locations where no ERMS is provided. At a control facility it shall interface with radio console equipment via interfaces with voice switching and control equipment. Interfaces shall be provided with the Maintenance Processor Subsystem located at ARTCCs and Maintenance Sectors. The interfaces with the ARTCC MPS shall be a direct interface in accordance with NAS-MD-790 and Appendix D. RCE/RMMS interfaces at AFSS and ATCT and TRACONS will be via a concentrator (RMSC) or direct via a leased line to the MPS located at the ARTCC or the Sector MPS. An Interface Control Document (ICD) for RCE/RMMS interface shall be provided in accordance with NAS-MD-790, and the operational requirements as specified in NAS-MD-792. The RCE shall also interface with Government Furnished Equipment (GFE) AC primary power load centers. Both Type I and Type II facilities shall have interfaces with the voice band width transmission facilities as specified in 3.3, that interconnect them.

These interfaces are listed in Table 4. Each external interface shall be made through a module, so that future changes in interface characteristics may be accommodated through a change in that module, and not affect other modules.

TABLE 2

RCE SIZING - DESIGN REQUIREMENTS

TYPE II FACILITIES FACILITY TYPE	TOTAL NO. OF CHANNELS*		TOTAL NO. OF SITES CONTROLLED (LOCAL & REMOTE)		TYPE OF SITE CONTROLLED
	MIN	MAX	MIN	MAX	
ARTCC	9	68	3	41	RCAG
TRACON	4	24	1	5	RTR
ATCT	2	12	1	2	RTR
ACF	19	103	7	30	RTR
AFSS	15	113	5	75	RCO,EFAS, RTR

TYPE I FACILITIES FACILITY TYPE	TOTAL NO. OF TRANSMITTERS**		TOTAL NO. OF RECEIVERS**		REMARKS
	MIN	MAX	MIN	MAX	
RCAG	2	32	2	32	
RTR	2	48	2	48	
RCO	2	12	2	12	Excludes NAVAIDS
EFAS	2	4	2	4	
CONSOLIDATED SITE	12	48	12	48	Includes RCAG, RTR, RCO, EFAS

* Each channel shall provide for the control of two (2) frequencies.
** Includes, VHF, UHF, fixed tuned main + standby equipment and tunable transceivers.

TABLE 3

RCE MODULE NOMENCLATURE

RADIO SITE MODULES

Designation	Function
IA1	Trunk Termination Module
IA2	Filter and Modem Module
IB2	Channel Control Module
IB1	Radio Equipment Interface Module
IC1	Trunk Restoral Switch and Audio Bridging Module
IE	Channel Configuration Controller Module
IF	Master Configuration Controller Module
IG	RMS/RMM Interface Module

CONTROL FACILITY MODULES

Designation	Function
IIA1	Trunk Termination Module
IIA2	Filter and Modem Module
IIB2	Channel Control Module
IIB1	Voice Switching and Control System Interface Module
IIC1	Trunk Restoral Switch and Audio Bridging Module
IIE	Channel Configuration Controller Module
IIF	Master Configuration Controller Module
IIG	RMS/MPS Interface Module
RCEC	RCE Concentrator Module

TABLE 4

RCE INTERFACES

1. RADIO SITE (Type I)

Solid State Radio Equipment
- Transmitters
- Receivers
- Antenna Transfer Relays

Remote Monitoring
- Environmental Remote Monitoring Subsystem (ERMS)
- RMM Sensors (GFE)
- Maintenance Data Terminal (MDT)

2. CONTROL SITE (Type II)

Voice Switching and Control Equipment
- 300 and 301 Type Systems
- ICSS
- VSCS
- TCS

Remote Monitoring
- Remote Monitoring System Concentrator (RMSC)
- Maintenance Processor Subsystem (MPS)
- Maintenance Data Terminal (MDT)

3. VOICE BAND WIDTH TRANSMISSION FACILITIES

Type 3002 or FAA-S-1142a (referred to as 1142) four-wire (4-Wire) transmission facilities or equivalent 300 Hz to 3000 Hz voice grade private line circuit, with no equalization

4. AC PRIMARY POWER

Commercial AC Power (GFE load centers at either Type I or Type II facilities)

Uninterruptable Power Supply (UPS) AC power (GFE load centers at Type II facilities only)

3.3 Module Requirements - Table 5 provides an identification of RCE modules required for Type I (Remote facilities) and Type II (Control facilities). The table also provides minimum and maximum module sizing requirements associated with the various types of facilities for which module configurations are required to provide the overall channel functions specified in 3.2.1. Design features of each module type indicated in the table shall permit the fabrications, test delivery and installation of each individual type in quantities as specified in the contract schedule. The integration of these modules into operational configurations shall be possible by providing matched module interfaces which will permit field installation personnel to establish the required configurations. On-site cabling and wiring shall be minimized by utilization of plug-in module insertion in prewired assemblies, subassemblies or cabinets, as specified in 3.8 for this purpose. These assemblies, subassemblies or cabinets shall be designed to accommodate the maximum sizing values indicated in Table 2 for each type of facility. All Type I modules shall be interchangeable with their corresponding types at any Type I facility. Similarly, all Type II modules shall be interchangeable with those provided at any Type II facility. Typical module configurations which are required for specific functional configurations are covered in 3.3.4. The following subparagraphs define the functions to be performed by each module type shown in Table 5. The contractor may reallocate control functions between the various modules or add subset modules if it is determined that it is cost effective to do so and also provides benefits in production, test, installation maintenance, flexibility, performance and reliability factors. In no case however, shall the basic function of the module, as specified herein, be changed. If additional modules which may be subsets of the basic modules defined below are required, these modules shall be assigned subscript identifications and become a part of the basic module type. For example, if it were necessary to partition module IIB2, its subset modules would become IIB2-1, IIB2-2, etc. The overall functions of the IIB2 module however, shall not be changed nor its interchangeability be compromised.

3.3.1 Type I Modules

3.3.1.1 Trunk Termination Module (Type IA1) - Type IA1 modules shall be utilized to provide RCE interfaces with 4-wire transmission facilities. Functions required by this module are as follows:

(a) Provide isolation and impedance matching.

(b) Provide protection against high line voltages due to lightning hits or high voltage interference.

TABLE 5

RCE MODULE SIZING REQUIREMENTS

TYPE I	IA1		IC1		IA2		IB2		IB1		IE		IF		IG	
FACILITIES	MIN	MAX	MIN	MAX	MIN	MAX	MIN	MAX	MIN	MAX	MIN	MAX	MIN	MAX	MIN	MAX
RCAG	2	24	0	1	1	12	1	12	2	24	0	1	0	0	1	12
RCO	3	24	1	1	2	12	2	12	3	24	1	1	0	0	2	12
RTR	2	24	0	1	1	12	1	12	2	24	0	1	0	0	1	12
RCF	6	24	1	1	3	12	3	12	6	24	1	1	0	1	3	12
EFAS	1	2	0	0	1	1	1	1	2	2	0	0	0	0	1	1

SEE NOTES 1 & 2

TYPE II	IIA1		IIC1		IIA2		IIB2		IIB1		IIE		IIF		IIG		RCEC	
FACILITIES	MIN	MAX	MIN	MAX	MIN	MAX	MIN	MAX	MIN	MAX	MIN	MAX	MIN	MAX	MIN	MAX	MIN	MAX
ARTCC	18	136	1	6	9	68	9	68	18	136	1	6	1	1	9	68	1	1
TRACON	8	48	1	2	4	24	4	24	8	48	1	2	0	1	4	24	1	1
ATCT	4	24	1	1	2	12	2	12	4	24	1	1	0	0	2	12	1	1
AFSS	30	225	2	10	15	113	15	113	30	225	2	10	1	1	15	113	1	1
ACF	44	219	4	28	19	103	19	103	36	189	4	28	1	1	19	103	1	1

SEE NOTES 1 & 2

TABLE 5 (CONTINUED)

NOTES:

1. THE GENERAL RELATIONSHIPS ON WHICH TABLE 5 IS BASED ARE AS FOLLOWS:

   (a) A1 MODULES = NUMBER OF RADIO TRUNKS, INCLUDING SPARES AND ORDER WIRES

   (b) A2 MODULES = 1/2 A1 MODULES (EACH A2 PROVIDES 2 AUDIO INPUTS/OUTPUTS + 300 AND ONE 1200 DATA I/O)

   (c) B2 MODULES = 1/2 NUMBER OF B1 MODULES
   = NO. OF A2 MODULES

   (d) B1 MODULES = NUMBER OF FREQUENCIES

   (e) C1 MODULES = $\frac{A1}{24}$; ONE REQUIRED IF A1 > 2

   (f) E MODULES = # C1 MODULES

   (g) F MODULES = REQUIRED IF # E MODULES IS > 1

   (h) G MODULES = # OF B2 MODULES

   (i) RCEC MODULES = 1 PER TYPE II FACILITY

2. SIZE OF C1 MODULES AS FOLLOWS:

   MAXIMUM SIZE -(MODULAR CONSTRUCTION)

   C1 = 24 X 24 AUDIO MATRIX (4 WIRE)

   CONTROLLED BY E MODULE

(c) Provide the capability to loop back the transmit pair of the 4-wire facility to the receiver pair on the secondary side of the isolation transformer under remote control of the Type II control facility or by manual control at the Type I facility maintenance panel.

(d) Provide audio level sensing and encoded level read-out on the Type I receiving pair and provide for the connection of a 2225 Hz pilot tone on the transmitting pair of trunks on which no 300 or 1200 baud modems tones are sensed.

(e) Provide terminations on other RCE modules as follows:

1. Termination on either of the two line ports of a designated IA2 module, as determined by site adaptation data, when a IC1 module is not utilized in the site configuration

2. Termination on the line side of a IC1 module when this module is included in the site configuration

The (1) or (2) option shall be implemented during site installation of the required site configuration and will not require automatic changeover from one option to the other, once installed.

3.3.1.1.1. Isolation and Impedance Matching Functions - The electrical characteristics of this function shall be as follows:

(a) Isolation - Transformer coupled

(b) Impedance - 600 ohms, balanced to ground.
The longitudinal balance shall be 40 dB minimum

(c) Input Composite Audio Level = -9 dBm +/-1 dB (To IA2 module or IC1 module)

(d) Output Composite Audio Level = -9 dBm +/-1 dB (From pilot tone, IA2 module or IC1 module)

(e) Crosstalk between transmit and receive paths - not less than 72 dB

(f) The transmit level at the IA1 module interface with the trunk shall be 0 dBm +/-1 dB for type 3002 trunk or equivalent, and -8 dBm +/-1 dB for FAA-S-1142a trunk or equivalent.

(g) The receive level at the IA1 module interface with the trunk shall be -16 dBm +/-4 dB for type 3002 trunk or equivalent, and -17 dBm +/-4 dB for FAA-S-1142a trunk or equivalent.

3.3.1.1.2 High Voltage Protection Function - Although lightning and high voltage protection may be incorporated in the transmission line termination provided by a common carrier or government owned facilities, high voltage surges which exceed the limits of RCE modules may be propagated over the line/RCE demarcation point. The IA1 module therefore shall contain additional protection devices, as determined by the contractors design, to prevent damage to RCE modules or module elements.

3.3.1.1.3 Loop Back Function - Loop back of the transmitting and receiving pairs of a 4-wire transmission facility terminating in a IA1 module shall be implemented via a straightforward line-to-line connection on the RCE side of the isolation transformer. Pads and amplifiers are not required in this connection. The receiving line sensor (3.3.1.1.4), shall be included in the loop back connection but shall remain connected to its associated IB2 module. The pilot tone connected to the transmitting line shall however, be disconnected to permit audio response testing on the trunk in the loop back mode. The control for any IA1 module loop back connection shall be in a designated IB2 module, as determined by site adaptation data. The loop back function shall be remotely initiated at the controlling Type II facility by a maintenance action, and also by a local maintenance action at the Type I facility.

3.3.1.1.4 Audio Level Sensing Function - The IA1 module shall contain an audio level sensor permanently bridged on the RCE side of the isolation transformer on the incoming pair of the 4-wire facility and a 2225 Hz switchable pilot tone bridged connection on the RCE side of the isolation transformer on the outgoing transmitting pair. The bridging loss shall not exceed 0.1 dB. The characteristics of this sensor and its interfaces and the pilot tone shall be as follows:

1. The sensor shall continually monitor signals received on the receiving pair of the transmission facility. These signals will have the following characteristics:

   (a) Voice signals combined with 300 baud data modulated tones, or 300 baud data tones without voice present, or unmodulated 300 baud tones

   (b) 1200 baud data tones without voice or 300 baud tones, with and without modulation

(c) 2225 Hz pilot tone unmodulated sinusoidal

(d) Received 3002 trunk transmission level ranges for (a), (b) and (c) above will normally fall within the following ranges:

1. 3 second average composite level of voice + 300 baud tones = -16 dBm +/- 4 dB

2. 300 baud tones without voice present = -19 dBm +/- 4dB

3. 1200 baud tones = -16 dBm +/- 4 dB

4. Trunk circuit noise = 43 dBrnC
   = -45 dBm

   (Assume maximum case for 1000-1500 mile circuit length)

5. Pilot tone (2225 Hz) = -16 dBm +/- 4 dB

2. The sensor shall deliver encoded level status and alarm signals to an associated IB2 module, or a IE module, as determined by the site configuration and adaptation data, in accordance with Table 6. IB2 or IE module responses to sensor alarms indicated in this table shall be in accordance with 3.3.1.3.2.2.1 Table 9.

3.3.1.1.5 Terminations on Filter and Modem (IA2) Modules - When a IC1 module is not utilized, up to two IA1 modules shall be assigned to a specific IA2 module, as determined by site adaptation data. The IA2 module assigned shall be the module which connects with the IB2 module containing the IA1 line sensor inputs covered in paragraph 3.3.1.1.4. Figure 3 provides an illustration of the required interconnections. Figure 4 illustrates the interconnections required when a IC1 module is utilized in the site configuration. The electrical interfaces between the IA1 module and the IA2 and IB2 modules shall be such that no adjustments of module design or performance parameters shall be required when either the Figure 3 or Figure 4 configurations are utilized. Functional requirements of the IC1 module are specified in 3.3.1.5.

TABLE 6
LINE SENSOR ALARM THRESHOLD

SENSED LINE CONDITION	THRESHOLD LIMITS (Note)	INPUT TO IB2 MODULE (Note)
1) line idle		
(a) 300 baud tones	nominal level -19 dBm	no alarm
	high level -15 dBm	hi level alarm
	low level -23 dBm	low level alarm
(b) loss of 300 baud tones	noise level (-45 dBm) for 40 ms or less	no alarm
	noise level or open line for > 40 ms	line alarm
2) voice receiving plus 300 baud tones	nominal level -16 dBm	no alarm
	high level -12 dBm	hi level alarm
	low level -20 dBm	low level alarm
	noise level (-45 dBm) or open line for > 40 ms	line alarm
3) 1200 baud		
(a) 1200 baud tones	same as 2 above	same as 2 above
(b) loss of 1200 baud tones	same as 2 above	same as 2 above
4) Pilot tone	nominal level - 16 dBm	no alarm
	high level - 12 dBm	hi level alarm
	low level - 20 dBm	low level alarm
	loss of tone > 3 Sec	line alarm

Note:

All alarms shall automatically be released when levels return within their threshold limits. The IB2 or IE module shall count and report these alarms in accordance with 3.3.1.3.2.2.1. All threshold values indicated in this table are initial design requirements and are subject to evaluation and final determination during first article configuration testing in the factory test bed as required in Section 4 of this specification. The values indicated do not account for seasonal variations in nominal levels of approximately +/- 5dB. The final determination of both nominal and alarm thresholds shall include adjustments for these variations. The line sensors therefore shall be designed to provide adjustable thresholds within +/- 10dB of the values indicated in the table.

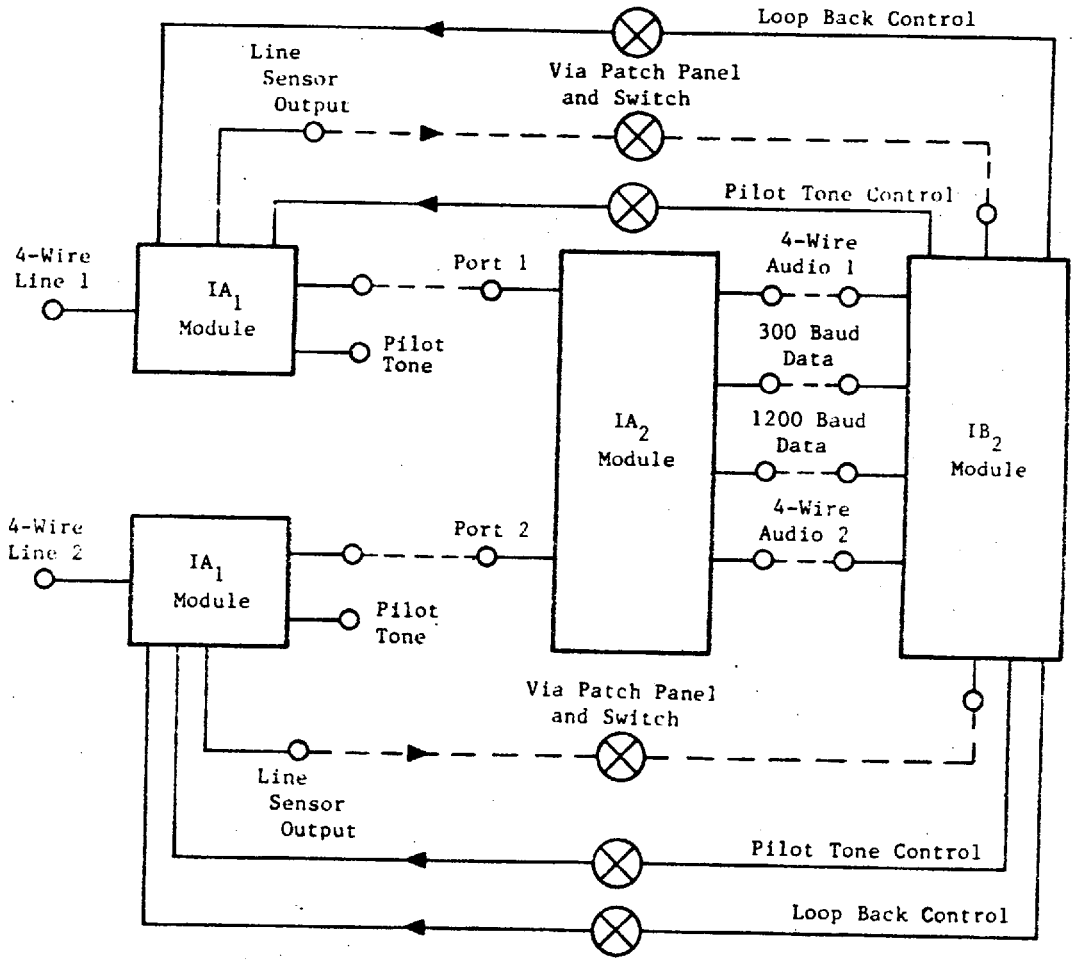

FIGURE 3
IA_1 MODULE INTERCONNECTIONS WITHOUT A IC_1 MODULE

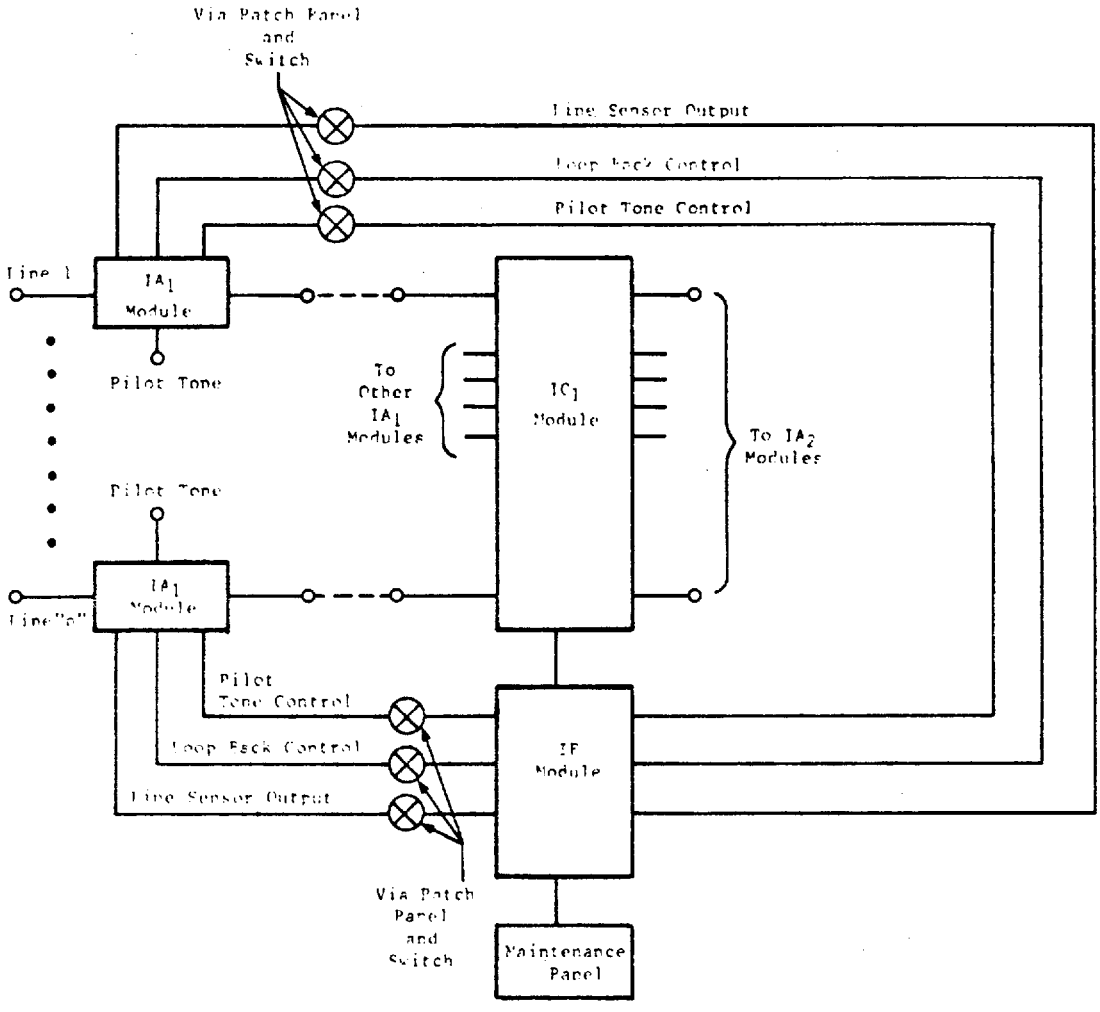

FIGURE 4

IA_1 MODULE INTERCONNECTIONS WITH A IC_1 MODULE
IN THE SITE CONFIGURATION

3.3.1.2. Filter and Modem Module (Type IA2) - Type IA2 modules shall provide all line transmission audio and data level amplification, level regulation, filtering, 300 and 1200 baud modems and other logic required to transmit and receive both audio and data signals under primary control of the IB2 module. This module shall contain provisions for inputs on the module IB2 side to either connect directly to either or both of the two audio ports and the 300 baud and 1200 baud data ports of an assigned IB2 module, as determined by site adaptation data. The IA2 module shall also provide optional connection capability for direct connections to assigned IA1 modules or to a IC1 module, when it is included in the site configuration, as illustrated in Figures 3 and 4. Functions required by the IA2 module are as follows:

(a) Audio band pass and band reject filtering to provide simultaneous transmission of voice and 300 baud data on a 3002 unconditioned voice channel with the capability of by-passing the filters

(b) Reserved

(c) Tone and noise suppression

(d) Standard data interfaces and modems for the interchange of 300 and 1200 baud data between IB2 and IIB2 modules and between IE and IIE modules.

(e) Timing, control and switching logic functions for the connection, disconnection of 1200 baud modem inputs and outputs, and the automatic assignment of both 300 and 1200 baud modem inputs and outputs to either or both of the two line ports of the module. The control for these connections shall be in the associated IB2 module.

The transmit composite voice and data transmission level control may be optionally located in the IA1 module. If analog, the basic channel levels in 3.3.1.2.2 apply.

3.3.1.2.1 Audio Band pass and Band Reject Filtering Requirements - Filter configurations shall meet the following requirements:

(a) Voice band pass - within + 1.5 dB of the 1000 Hz value between 300-1825 Hz and between 2425-3000 Hz

(b) Band reject - at least 50 dB below the 1000 Hz value between 1945-2305 Hz

(c) 300 baud band pass - within + 1.5 dB of the 1000 Hz value between 1950-2300 Hz

(d) Test and validation - unique frequency attenuation characteristics of the filters are not accounted for in (a), (b) and (c) above. The precise characteristics at filter 3 dB points and filter electrical and mechanical design features shall be subject to Government approval. The band pass and band reject filter characteristics shall be such that the reliability, maintainability and performance requirements of Sections 3.7 and 3.10 of this specification can be met and validated in first article tests in the factory testbed.

3.3.1.2.1.1 Filter Configuration - Figure 5 illustrates the functional filter configurations required in the IA2 module. The figure is not intended to represent a required design. Other elements indicated in the figure are covered under the appropriate subparagraphs of this section.

3.3.1.2.2 Transmit and Receive Voice and Data Transmission Level Control and Regulation - Transmission level control for voice and data shall be provided by the IA2 module. Adjustable gain amplifiers, impedance matching and attenuators shall be utilized as required to establish the input and output level requirements specified below:

(a) The composite rms output level at line ports 1 and 2 shall not exceed -9 dBm nominal averaged over a 3 second period with a nominal voice input level, from their corresponding IB2 modules of -9 dBm +/- 1.5 dB and a nominal 300 baud data output level from the 300 baud modem (Refer to Figure 5). The level balance between the 300 baud data signal and the voice (up to 15 dB) shall be set by initial adjustments on their corresponding output amplifiers before being bridged on the line port. Once set, the amplifiers shall maintain their gain within +/- 1.0 dB. The precise output level to the trunks and the proper balance between 300 baud data and voice levels required for minimum mutual signal interference shall be determined during first article testing in the factory testbed.

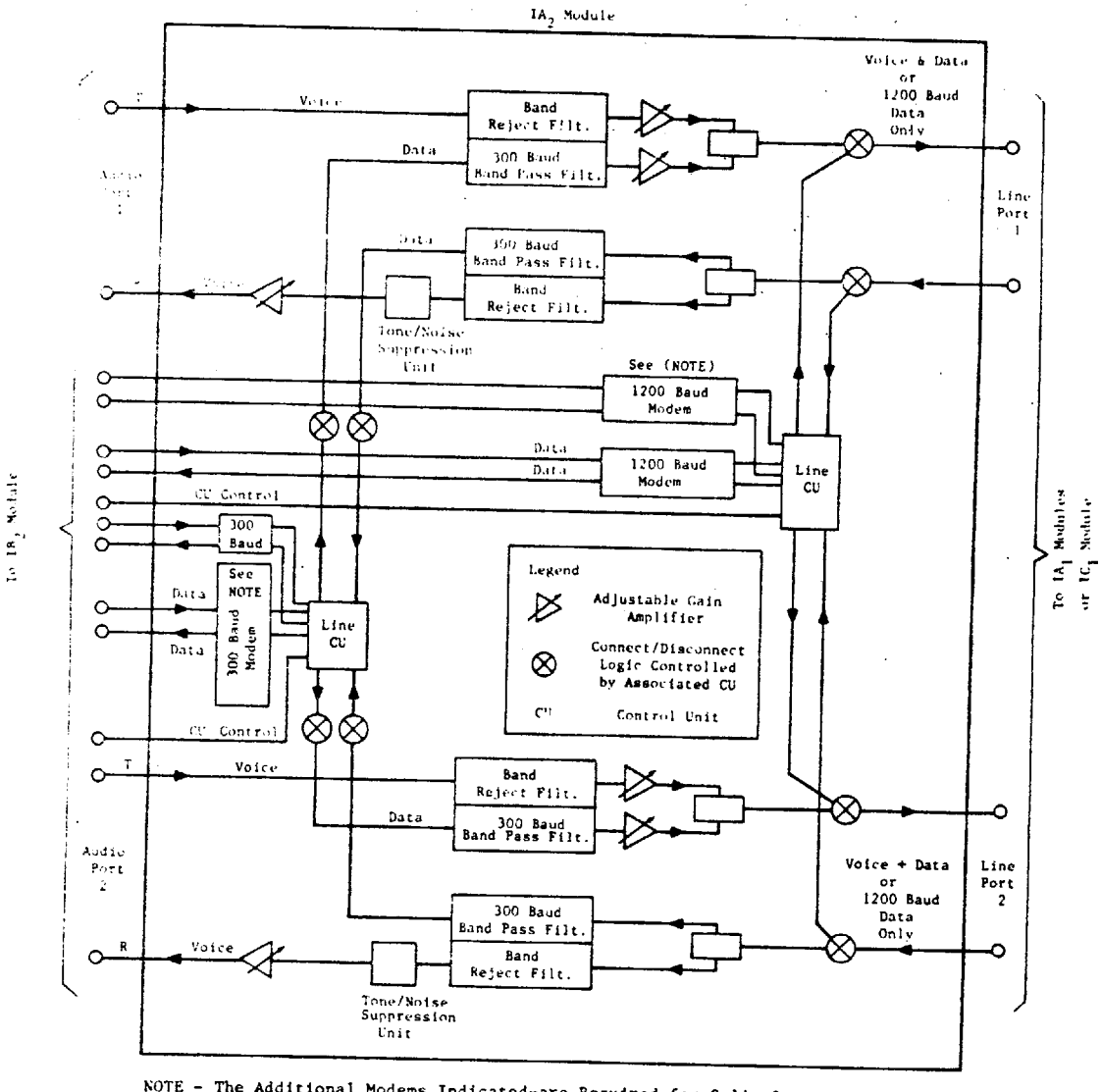

NOTE - The Additional Modems Indicated-are Required for Split Operation and shall be Plug-in Subset Modules of the Basic IA_2 "Selective" Module

FIGURE 5
IA_2 MODULE ELEMENT FUNCTIONAL CONFIGURATION ILLUSTRATION

(b) The composite rms receive level at line ports 1 and 2 will nominally be -9 dBm +/- 4 dB. The incoming levels delivered to the 300 baud modem and the receive band reject filter will depend on the level balance between voice and data signals at the Type II transmitting facility and as indicated in (a) above. The nominal average rms voice level delivered to audio ports 1 and 2 towards the IB2 module, however, shall be -9 dBm +/-1.5 dB regardless of the level balance between voice and data contained in the composite input signal at the line ports. The receive voice amplifier shall maintain this level over an input range of +/- 10 dB from the established balanced level. A site adaptable capability shall be provided to disable the automatic gain/level regulation function, thereby converting the receive voice amplifier with AGC into a fixed gain linear amplifier. The gain stability shall be within +/- 1.0 dB.

(c) Transmitting and receive levels of the 1200 baud modem shall be in accordance with the nominal line port levels covered in (a) and (b) above, e.g., -9 dBm +/- 4 dB transmit and receive. Output and input level adjustment capability shall be provided by the modem.

(d) All nominal voice levels indicated in (a) and (b) are 1000 Hz test tone levels which shall be utilized for initial transmission level adjustments and regulation required under these subparagraphs. Correlation of the specified 1000 Hz test tone levels with talker volumes and the determination of final values of test tone levels shall be made during first article testing in the factory test bed as specified in 3.11 and 4.0. Levels indicated for 300 baud and 1200 baud data transmission apply to the unmodulated modem carrier idle on-line "mark" condition.

3.3.1.2.3 Tone and Noise Suppression - Tone and noise suppression to prevent the propagation of high level tones or noise in the 300-1825 Hz and 2425 - 3000 Hz audio pass band towards the IB2 module shall be provided in the IA2 module. This element may be incorporated in the receive amplifier or may be a separate element in the voice receiving path. The tone and noise suppression element shall detect single or composite tones of any frequency in the voice pass band and also detect a high noise signal of any type that may be present in the audio output towards the IB2 module. This element shall have the following characteristics:

(a) A single frequency, composite tones or noise having levels greater than the nominal regulating range of the amplifier (+/-10 dB) shall reduce the nominal -9 dBm level at the audio port to the IB2 module by 20 dB to 22 dB for the duration of the high level interfering signals.

(b) The suppression unit shall have a response time of not greater than five (5) milliseconds in performing the required suppression function. It shall also recover to a normal state within ten (10) milliseconds after the interfering tone or noise is no longer detected. If the high level condition persists for 3 seconds or more and does not correlate with the line sensor alarm requirements of Table 6, a separate alarm shall be provided to the maintenance panel by the IB2 module indicating an RCE high level condition. This alarm shall be transmitted to the Type II facility in the same manner as required for the line sensor alarm transmission resulting in an alarm indication at the Type II facility maintenance panel and an RCE alarm status message to the MPS.

3.3.1.2.4 Standard Data Interfaces and MODEM Requirements - 300 baud and 1200 baud data interfaces with their respective modems shall be in accordance with EIA Standard RS-232. Data inputs and outputs to and from the IB2 module shall meet the requirements of this Standard. Data interchange requirements between a Type I facility and a Type II facility (between IB2 and IIB2 modules), via IA2 and IIA2 modules, shall be as specified in 3.4. Modems utilized in the IA2 module shall as a minimum, have the following features:

(a) Frequency Shift Keying (FSK) for 300 baud operation in the pass band specified in 3.3.1.2.1.

(b) Type of modulation for the 1200 baud modem shall be FSK.

(c) Send and receive transmission level control.

(d) Operate over unconditioned 300-3000 Hz 4-wire voice facilities composed of combinations of physical cable, T carrier, L carrier, N carrier, microwave and future satellite and fibre optic links, in a full duplex mode.

(e) Asynchronous serial binary data operation.

(f) Fast carrier "on"/"off" detection and minimum clear to send delays consistent with the requirements of 3.4 and 3.10.

(g) Compatible with encoding/decoding, formatting and CRC error detection logic, software and firmware in the IB2 module as may be provided to satisfy the requirements of 3.3.1.3 and 3.4.

(h) Remote data loop back capability for test and maintenance.

(i) Loss of carrier in excess of 40 ms shall present a steady SPACE signal to the IB2 module.

3.3.1.2.5 Timing, Control and Switching Logic Functions - The IA2 module shall contain the required logic for establishing the voice plus 300 baud data mode and the 1200 baud mode upon receipt of appropriate control signals from the IB2 module, as illustrated in Figure 5. The logic required to establish the 300 baud and 1200 baud modes on either line port 1 or line port 2, also under primary control of the IB2 module, shall also be contained in this module. The modem control units shall provide the connect and disconnect control and also provide the associated timing control as required by 3.4. and 3.10 The connect and disconnect switching functions for the required modes of operation shall provide voice and data circuit configurations as follows:

(a) Selective channel operation on Audio Port 1 and Line Port 1 with 300 baud data, plus voice or 1200 baud data connected to Line Port 1.

(b) Same as (a) except connected to Audio Port 2 and Line Port 2.

(c) Split frequency operation with voice plus 300 baud data and 1200 baud data connected to both Line Ports 1 and 2. Two 300 baud and two 1200 baud modems shall be provided for this mode both under control of the IB2 module with separate 300 and 1200 baud interfaces. This mode shall be designed into the IA2 module configurations such that the provision of the additional modems and IB2 module interfaces, can be implemented by plug-in sub-set modules when split operation is required by the contract schedule.

(d) Split line/modems operation where the transmitting voice and transmitting sides of each modem connect to the transmitting pair of line port 1 and the receiving sides, voice and modems, connect to the receiving pair of line port 2.

When a path is disconnected either by selective/split or Line Port 1 or 2 assignment configurations established by the IB2 module or disconnected during the sequence involved in alternate 1200 baud-voice + 300 baud connections required under 3.4, all

disconnected paths shall terminate in a resistive load rather than remain in an "open" state to avoid transient impulses or noise from being generated during sequential switching operations or the disconnected elements in the module.

3.3.1.3 Channel Control Module (Type IB2) - The IB2 module together with its associated IB1 modules and other interfacing modules shall provide the basic control mechanism at the Type I facility, for voice and data signaling and control of one radio channel. By definition, a radio channel includes a configuration of RCE modules at both the Type I and Type II facility which shall provide voice and signaling and control functions for two frequency outlets. The RCE channel shall interface with the voice switching and control system radio position equipment at the Type II control facility and with assigned radio transmitters, receivers or transceivers at the Type I facility. The radio channel shall operate with both frequencies combined on a single trunk (selective mode) or operate in a split mode where each frequency operates independently on a separate trunk. Interfaces with position equipment at the Type II facility shall be provided by the IIB1 modules as specified in Appendix B.

Interface with radio transmitters, receivers or transceivers shall be provided by the IB1 modules as specified in Appendix C. Two (2) IB1, and IIB1 modules are required for each IB2 and IIB2 module. Each B1 module shall be assigned to one of the two frequencies of the channels. Voice and data interchange on each channel, including combined (selective) or split operation of the two frequencies, shall be controlled by the interoperations of the IIB2 and IB2 modules as specified in 3.4. The required functional and electrical characteristics of the IB2 module shall be as specified in the following subparagraphs.

3.3.1.3.1 Interfaces - The IB2 module shall interface with two IB1 modules, one IA2 module, IC1, and IE modules when included in the site configuration, and one IA1 module per trunk (two (2) IA1 modules maximum). In addition, the IB2 module shall interface with the IG module to permit RMS data to access 300 baud data paths controlled by the IB2 module.

3.3.1.3.1.1 Interface Characteristics - Module IB2 electrical and functional interface characteristics for each of the interfaces required in 3.3.1.3.1 shall be as defined in the following sub-paragraphs.

3.3.1.3.1.1.1 IB1 Module Interfaces - Each IB2 module shall be assigned to operate with two IB1 modules as determined by site adaptation data. Each IB1 module shall interface with its assigned IB2 module such that the following functions are performed via these interfaces:

(a) Voice transmit and receive connections (4-wire)

(b) PTT control

(c) PTT release control

(d) Transmitter/Receiver main/standby control and confirmation signals

(e) PTT confirmation

(f) Receiver squelch break indication

(g) Receiver AGC voltage

(h) Remote tuning control of transceivers

(i) Transceiver tuning confirmation

(j) IB2 - IB1 module remoting capability

(m) Dual control facility frequency control and override

The IB2 module shall decode messages received from the IIB2 module of the control facility and provide the appropriate signal to the IB1 modules over the above interface connections. The IB2 module shall also encode signals received from its associated IB1 modules for transmission to the same IIB2 module at the control facility. This data interchange shall be in accordance with 3.4.

The electrical characteristics of the IB1 module interfaces shall be as specified in Table 7.

TABLE 7
IB2 - IB1 MODULE INTERFACES
--ELECTRICAL CHARACTERISTICS--

FUNCTIONAL INTERFACE	REQUIRED ELECTRICAL CHARACTERISTICS	
1. Voice transmit to IB1 modules	Impedance	- 600 ohms +/- 60 ohms at the transmitter voice input via the IB1
	Level	- 9 dBm (split or selective) adjusted to deliver a -10 +/-0.5 dBm signal to the transmitter via the IB1 module.
	Crosstalk	- 300 baud in-band and 1200 baud tones shall not exceed -50 dBm. Cross-talk attenuation between IB2 module voice interfaces shall not be less than 72 dB
	Noise	- Total noise including hum and the effects of the 300 baud tones shall not exceed -65 dBmC at the nominal voice output level of -9 dBm +/- 1 dB
2. Voice receive from IB1 modules	Impedance	- 600 ohm +/- 60 ohms balanced output from receiver via IB1 module
	Level	- Receiver audio test tone level set to 0 dBm +/- 2dB The expected voice variation shall be +5 db to -10 dB dependent upon RF and AF gain control settings. The IB1 module shall, however, deliver a voice level of 0 dBm, averaged over a 3 second period, to this interface. (See 3.3.1.4 for IB1 module requirements).

Note: All RCE noise measurements are made with a C-message weighing filter, AGC's within the path set to nominal gain, and data tone removed.

TABLE 7 (CONTINUED)

FUNCTIONAL INTERFACE		REQUIRED ELECTRICAL CHARACTERISTICS
2. Voice receive from IB1 Modules (cont.)	-Crosstalk -	Crosstalk attenuation between IB2 module voice Interfaces shall not be less than 72 dB. The muting of receiver audio at a Type I Facility shall be implemented as a function of the IB2 module. The IB1 module shall provide the unmuted receiver output to the IB2 module.
3. Push to talk	-PTT control -	A decoded PTT control signal to either or both IB1 modules shall be an unambiguous DC voltage applied to these interfaces. The duration of this applied voltage shall be controlled by the IB2 module. This voltage shall activate transmitter keying interface in the IB1 module in accordance with 3.3.1.4
4. Push to talk Release	-PTT release -	A decoded PTT release signal to either or both IB1 modules shall be an unambiguous DC voltage applied to the PTT control interfaces. The release signal shall be controlled by the IB2 module and shall result in the release (deactivation) of the transmitter keying interface in the IB1 module in accordance with 3.3.1.4. The "idle" condition on these interfaces shall be the release signal.
5. Transmitter/Receiver main/standby control		Selection of the No. 1 or No. 2 transmitter and No. 1 or No. 2 receiver assigned to each IB1 module shall be controlled by the IB2 module. Two DC interfaces shall be provided for each IB1 module. One interface shall be utilized for transmitter switchover control and the other for receiver switchover control. A decoded DC voltage on either the transmitter or receiver main/standby interfaces shall cause the IB1 module to connect transmitter No. 1 and receiver No. 1 to the voice and other associated interfaces.

TABLE 7 (CONTINUED)

FUNCTIONAL INTERFACE	REQUIRED ELECTRICAL CHARACTERISTICS
5. Transmitter/Receiver Main/Standby control (continued)	A distinct, unambiguous DC voltage on either of the abcve control interfaces shall cause the IB1 module to connect transmitter No. 2 and receiver No. 2 to the voice and other control interfaces. It shall be possible to establish any combination of No. 1 and No. 2 transmitters and receivers assigned to the IB1 module by application of the appropriate voltages on these interfaces. Implementation of switchovers in the IB1 module shall be as specified in 3.3.1.4. An unambiguous DC voltage on a M/S confirmation interface applied by the IB1 modules, shall indicate that the M/S transfer has been completed. A distinct, unambiguous DC voltage shall indicate that the S/M transfer has been completed. The IB2 module shall encode these confirmation signals and transmit them to the control facility in accordance with 3.2 and 3.4.
6. PTT confirmation	The IB1 module shall transmit a PTT confirmation signal over a DC interface to the IB2 module. This signal shall be a DC voltage applied at the IB1 module and shall remain on for the duration of the keyed state of the selected transmitter. A distinct unambiguous DC voltage shall be applied to this interface when the PTT keyer unit in the transmitter is released. Further requirements for this function are covered in 3.3.1.4

TABLE 7 (CONTINUED)

FUNCTIONAL INTERFACE	REQUIRED ELECTRICAL CHARACTERISTICS
7. Receiver squelch break indicator	The state of the on-line receiver squelch break circuit shall be transmitted to the IB2 module via a DC interface. The IB1 module shall apply distinct, unambiguous DC voltages indicating when the squelch break circuit is open or closed.
8. Receiver AGC voltage	A DC interface shall be provided to transmit the on-line receiver AGC voltage to the IB2 module. This voltage shall be derived directly from the receiver via the IB1 module. The resistance and sensor in this path shall be such that any current flow over this interface are consistant with Appendix C Table 4-14. The voltage ranges will be between 0 and 10 volts DC and shall be encoded in 0.1 volt increments and transmitted to the IIB2 module in accordance with 3.3.1.3.1.1.1.
9. Remote tuning control of Transceivers	A DC interface shall be provided to transmit digital DC tuning signals to the tuning heads of transceivers which interface with the IB1 modules. The tuning signals shall be an output of the I32 module and shall be compatible with the input circuit and timing requirements of the digital receiver of the tuning head. Transceiver commands decoded by the IB2 module shall also be transmitted over this interface.

TABLE 7 (CONTINUED)

FUNCTIONAL INTERFACE	REQUIRED ELECTRICAL CHARACTERISTICS
9. Remote tuning control of Transceivers (continued)	These commands will consist of receiver squelch "ON" or "OFF" control and power "ON"/"OFF" control. PTT control, main/standby control and receiver muting control shall utilize the fixed frequency interfaces described in items 1-8, and 11 with the IB1 module providing the required interface connections
10. Tuning Confirmation	Upon completion of the transceiver tuning process the tuning head will return a "READY" signal to the IB1 module. The IB1 module shall transmit this signal over a DC interface to the IB2 module by applying a DC voltage on this interface.
11. IB2 - IB1 module remoting	A module remoting circuit which will permit a IB2 module at one facility to interface with a IB1 module at another facility shall be provided as specified in 3.3.1.4.1.
12. Dual Control site frequency	The IB2 - IB1 module interfaces required for this function shall be as specified in 3.3.1.3.2.4.

3.3.1.3.1.1.2 IA2 Module Interfaces - IB2 modules shall interface directly with one (1) IA2 module. These interfaces shall consist of two (2) audio 4-wire ports, one 300 baud port and one 1200 baud port for selective operation and two similar data ports for split operation to match the IA2 split mode requirement specified in 3.3.1.2.5 (c). In the "selective" mode only one audio port shall be utilized with the audio paths to and from the two (2) IB1 modules bridged in the IB2 module via switched connections. The switch shall have the capability of automatically transferring the bridged connection to either of the two ports interfacing with the IA2 module under control of a command received from the IIB2 module at the control facility or by a local maintenance action. Similarly the IB2 module shall provide for "split" operation where by each IB1 module voice input/output is connected to a designated port interfacing with the IA2 module based on site adaptation data. The "selective" to "split" operation shall be provided in accordance with the contract schedule. In both the "selective" or "split" mode the 300 baud and 1200 baud data paths shall provide all signaling and control functions for the two frequencies assigned to the associated IB1. The electrical characteristics associated with these interfaces shall be in accordance with Table 8.

3.3.1.3.1.1.3 IA1 Module Interfaces - Line sensor interfaces shall be provided to directly connect the IA1 module line sensor output to designated IB2 modules as determined by site adaptation data. The line sensor outputs shall be in accordance with 3.3.1.1.4, Figures 3 and 4, and Table 6. The interface shall be such that the capability to assign any two IA1 module line sensors to designated IB2 modules or the IE module contained is provided. As indicated in Figures 3 and 4 a patch panel and a switch shall be utilized for these purposes. This capability is required when more than one IB2 module is connected to a single four-wire trunk and sensor outputs from the IA1 module therefore, shall be assigned to the IE module contained in the configuration. The sensor output switching functions shall be controlled by the IE module to provide the required IB2 module connections, in accordance with site adaptation data or reconfiguration commands. At the contractor's option the required switching element may be a separate module unit or a subset module of the IC1 module. Control of the 2225 Hz pilot tone applied to the transmitting pair of the 4-wire trunk when a 300 or 1200 baud modem is not connected to that line shall be a function of the IB2 module. Therefore a direct control path is required to implement this function.

TABLE 8

IB2 - IA2 MODULE INTERFACES
--ELECTRICAL CHARACTERISTICS--

FUNCTIONAL INTERFACE	REQUIRED ELECTRICAL CHARACTERISTICS
1. Voice Transmit and Receive to and from the IA2 module	Impedance - Each audio port shall provide an input and output impedance of 600 ohms +/- 60 ohms when connected either as "selective" frequency combination or as a "split" frequency Level - (a) Output level to IA2, -9 dBm +/- 1.5 dB in split or selective mode, -9 dBm +/- 1 dB in "paired" mode (b) Input level from IA2, -9 dBm +/- 1.5 dB (The tone and noise suppression element may reduce this level by 20 dB in accordance with 3.3.1.2.3.)
2. 300 and 1200 Baud Data Transmit and Receive to and from the IA2 module	Local and remote DCE loop back capability shall be provided to permit fault isolation testing to be done under DTE control (IB2). These interfaces shall also provide control for switching the DCE to and from one of two alternate ports as specified in 3.3.1.2.5.

3.3.1.3.1.1.4 Bridging and Control Module Interfaces - Modules IE interfaces with the IB2 module shall be as required for each of these interfacing modules to perform their required functions. The functions of the IB2 module shall be as specified in 3.3.1.3.2.

3.3.1.3.1.1.5 RMMS Processor Interface - IG modules interfaces for transmitting RMM/RMS data through the IB2 modules shall be in accordance with 3.3.1.10.

3.3.1.3.1.1.6 Maintenance Panel Interface - The IB2 module shall interface with the RCE Type I Facility maintenance panel to provide local test and maintenance capability for RCE channel configurations and interfaces. Alternatively, where more than one channel is included in the site configuration, the maintenance panel interfaces shall be provided by the IE module. (See Figures 7 and 8 for illustrations).

3.3.1.3.2 Functional Requirements - The IB2 module shall provide an integrated capability to operate with its interfaces and to perform internal functions as specified in the following paragraphs. The contractor shall allocate these functions to hardware, firmware or software to provide a cost effective module assembly.

3.3.1.3.2.1 Selective/Split Voice Transmit/Receive Control - The IB2 module shall provide transmit and receive voice transmissions between the IB1 and IA2 modules. Transmission levels between these modules shall be as specified under the interface requirements stated in 3.3.1.2.2, and Tables 7 and 8. The IB2 module shall provide a 4-wire switching and bridging network and associate controls to permit combining of the two IB1 module voice inputs and outputs on a single audio port interfacing with the IA2 module. The network shall provide for a combined output on either of the two audio ports, or split operation, where each IB1 module can be connected to either one of the two audio ports towards the IA2 module. The bridging loss in the combined (selective) mode shall not exceed 3 dB. All IB2 module connections established by this switching network shall be under the remote control of the control facility's IIB2 module and also under local control of the Type I facility's maintenance panel. These controls will normally be exercised during the initial site configuration implementation, reconfiguration due to line/trunk or equipment failures, reconfiguration for operating reasons, and reconfiguration for test and maintenance reasons. Voice loop back capability at the IB2 - IB1 module interface shall also be provided by the switching network. These connections shall be remotely and locally controlled in the same manner as specified above.

3.3.1.3.2.2 Decoding and Encoding Functions - All data interchange messages received and transmitted via the interfaces with the IA2 module shall be decoded and encoded by the IB2 module. Decoded messages received from the control facility IIB2 module shall result in the IB2 module establishing the required operational or control function. Encoding of functional inputs received from the IB1 modules over the IB2-IB1 module interfaces and other interfaces and transmission of the encoded messages to the control facility IIB2 module via the interfaces with the IA2 module shall also be provided in the IB2 module.

The message formats, protocols, error detection requirements and message priority schemes for both 300 baud and 1200 baud data exchange for each operational and control function, received or transmitted, shall be in accordance with 3.4. The IB2 module shall convert decoded messages to analog or digital logic states as required by the functional interfaces covered under 3.3.1.3.1 and conversely, encode and transmit the analog or digital logic status of incoming functional interfaces as covered under that paragraph and 3.4.

3.3.1.3.2.2.1 Decoding and Correlation of Line Sensor Alarms - The line sensor alarms transmitted from the IA1 modules to their associated IB2 module, as specified in 3.3.1.1.4 and Table 6 shall be handled in accordance with the alarm criteria specified in Table 9 where a IE module is not included in the site configuration. Control of these functions, however, shall be handled by the IE module if included in the site configuration as specified in 3.3.1.8 (b).

3.3.1.3.2.3 Voice Loop Back Function - The capability to connect the voice transmit output to the voice receive input of each IB2 module, under control of the IIB2 module at the control facility shall be provided. This loop back connection shall be a direct line to line connection without amplifiers or other control elements in the IB2 module in the loop back path and implemented by the switching network of the IB2 module as specified in 3.3.1.3.2.1. For either the split or the selective modes of operation the loop back connections shall be made at either IB1 module interface but not both simultaneously, and as determined by decoding the loop back message from the control facility. The capability to establish these loop back connections from the local Type I facility maintenance panel shall also be provided but shall in this case, provide a capability to insert test or measuring equipment in series with or bridged on the loop back path.

TABLE 9

DECODING AND CORRELATION OF LINE SENSOR ALARMS

ALARM CONDITION (REFER TO TABLE 6)	MODULE IB2 FUNCTIONAL RESPONSE
1. Selective Configuration No Spare Trunk Available	
(a) High level alarm continuous for ≥ 3 seconds	Encodes alarm status and transmits to IIB2 module per 3.4. If < 3 seconds no action taken
(b) Low level alarm continuous for ≥ 3 seconds	Encodes alarm status and transmits to IIB2 module per 3.4. If < 3 seconds, no action taken. If the error rate (300 or 1200 baud) exceeds the thresholds stated in 3.4 the IB2 module shall classify this condition as a failed line and respond in accordance with 1(c).
(c) Noise level or open line for ≥ 40 ms and loss of modem tone	If 3 or more alarm conditions of this category occur over a 10 second period or the condition is sustained for ≥ 3 seconds the IB2 module shall classify this condition as a failed line. The IB2 module shall then apply a PTT release signal to both IB1 modules, mute the receivers and inhibit all encoding and decoding functions. When normal levels are sensed, this inhibit mode shall be released and the PTT release and muting restored to normal idle function states. A "clear to send" signal shall simultaneously be transmitted back to the IIB2 module at the control facility. However, the IB2 module shall not transmit encoded data until it has received a "clear to send" signal from the IIB2 module, as specified in 3.4

TABLE 9 (CONTINUED)

DECODING AND CORRELATION OF LINE SENSOR ALARMS

ALARM CONDITION (REFER TO TABLE 6)	MODULE IB2 FUNCTIONAL RESPONSE
2. Selective Configuration with Spare Trunk Available and Connected to IA1, IA2 and IB2 Ports.	
(a) High level alarm continuous for ≥ 3 seconds on operating trunk. No pilot alarm on spare trunk	Same as 1 (a)
(b) Low level alarm continuous for ≥ 3 seconds on operating trunk, no pilot alarm on spare trunk	Same as 1 (b) except failed line response shall be in accordance with 2 (c)
(c) Noise Level or Open line for ≥ 40 ms on operating trunk, no pilot alarm on spare trunk	If 3 or more alarm conditions of this category occur over a 10 second period or the condition is sustained for ≥ 3 seconds the IB2 module shall classify this condition as a failed line. The IB2 module shall then automatically switch the combined "selective" configuration to the spare trunk connected to the spare port towards the IA2 module. A control signal to the IA2 module shall simultaneously be transmitted which shall result in the transfer of the 300/1200 baud modems to the spare trunk and IB2 module terminations in the IA2 module. In addition, control signals shall be transmitted to the IA1 modules which shall disconnect the pilot tone on the transmitting pair of the spare trunk and connect the pilot tone to the transmitting

TABLE 9 (CONTINUED)

DECODING AND CORRELATION OF LINE SENSOR ALARMS

ALARM CONDITION (REFER TO TABLE 6)	MODULE IB2 FUNCTIONAL RESPONSE
(c) (Continued)	pair of the failed trunk. The switching time shall not exceed 1 millisecond. Concurrent with these operations the PTT, mute and encoding/decoding inhibit conditions covered in 1 (c) shall be applied and an alarm/switchover message transmitted to the control facility over the good trunk configuration in accordance with 3.4. Upon completion of the switchover the decoding/encoding inhibits shall be removed and all interfaces restored to a normal "idle" state within 1 millisecond and the IB2 module shall transmit a "clear to send" message. However the IB2 module shall not transmit operational or control data signal until it has received a "clear to send" signal from the IIB2 module as specified in 3.4. When the line sensor output on the failed trunk returns to normal threshold values the configuration established by the above procedures shall not be changed until a reconfiguration message is received from the IIB2 module
3. Selective configuration with spare trunk available (same configuration as (2)) but simultaneous alarms on both trunks per items 1 (a), (b) and (c) and 2 (a), (b), and (c)	Module IB2 responses shall be as specified under 1 (a), (b) and (c) except messages, including the state of both trunks for (a) and (b). Failed response shall be as required in 1 (c) except in addition, the pilot tone on the transmitting pair of the spare trunk shall remain connected

TABLE 9 (CONTINUED)

DECODING AND CORRELATION OF LINE SENSOR ALARMS

ALARM CONDITION (REFER TO TABLE 6)	MODULE IB2 FUNCTIONAL RESPONSE
4. Split Configuration Alarm conditions as covered under 1 (a), (b) and (c) and 2 (a), (b) and (c)	Response criteria under items 1 (a), (b) and 2 (a) and 2 (b) shall apply for each trunk. Alarm messages shall identify which of the two lines are being reported when either trunk is classified as failed under the criteria of (b) and (c). The IB2 module shall automatically combine (pair) the two IB1 modules on the good trunk, with the 300/1200 baud modems in the IA2 module to the good trunk and perform the same operations and responses as covered under 2 (c).
5. Split Configuration Both trunks in a failed state	Where both split trunks are in the failed condition as defined in 1 (c) and 2 (c) the IB2 module shall respond as required under 1 (c) for each IB1 module and perform the inhibit functions in the IB2 module. If the line sensors indicate both trunks have been restored to normal threshold values the IB2 module shall retain the split configuration. However if only one of the two trunks indicate a normal value the IB2 module shall combine the two IB1 module in a selective mode and perform the functional responses required under (4) above

3.3.1.3.2.4 Dual Control Site Frequency Override Functions - The capability to control designated frequencies at a Type I site from two different control facilities shall be provided. The capability to designate either of the two control facilities as the primary or secondary priority user, as an installation wiring option, shall be incorporated in the design of the IB2 and IB1 modules. A configuration of this type shall perform the following functions:

(a) Either control facility shall have independent capability of voice and signaling and control transmission to and from a common transmitter/receiver and its standby equipment by bridging the IB2 - IB1 module interfaces at the IB1 module interfacing with the designated transmitter/ receiver. Each IB2 module shall independently decode and encode the functional interface signals to and from the common IB1 module and complete all the voice and data interchanges required to and from both control facilities simultaneously except for the functions involved in an override state. The three functions that are involved in an override state are push-to-talk, push to talk confirmation, and receiver muting. The override states shall be in accordance with (b) below.

(b) A PTT signal originating at the primary control facility shall result in a PTT encoded lock out signal to be transmitted to the secondary control facility. The primary control facility shall receive a PTT confirmation signal. The PTT signal received from the primary control facility shall also result in muting the receiver path at the control facility for the duration of the PTT but the receiver path at the secondary facility shall not be muted. A PTT signal originating at the secondary control facility shall result in a PTT confirmation signal transmitted to both the secondary and primary control facilities. The receive path at the secondary facility shall be muted during its PTT operation but the receive path at the primary control facility shall not be muted. At any time during the secondary control facility's PTT state a PTT signal from the primary control facility shall result in a release of the secondary facility's PTT control and a trunk lockout signal transmitted to the secondary control facility resulting from the primary facility's PTT as stated above. The receiver muting states shall also be established as described above.

3.3.1.3.2.5 Multiple IB2 Modules Assigned to a Single Trunk - Up to six (6) IB2 modules may be assigned to a single trunk via the IA2 and IC1 modules for certain configurations (3.3.4). The IE module, shall perform parallel/series input/output control and formatting of messages, as covered in 3.4, based on the encoded individual outputs of the IB2 modules in the configuration and the decoding and distribution of received messages from the Type II facility. Voice transmit and receive functions of each IB2 module shall be combined by the IC1 module, under control of the IE module as described in 3.3.1.8. For this configuration each IB2 module shall contain remote receiver muting control capability. When a muting command is received and decoded by the IB2 module it shall attenuate the receiver output by up to 50 dB, adjustable. The mute state shall be encoded and transmitted to the IE module and shall remain in that state until a mute release message has been received. When released, that state shall also be encoded as an acknowledgment message and transmitted to the IE module. PTT signals, MAIN/STANDBY signal and other control and confirmation signals in either direction in each IB2 module shall be as previously covered except that the IE module shall provide master control and formatting of combined messages to and from the control facility as covered in 3.3.1.8 and 3.4. IB2 module interfaces with the RMMS processor, and responses to, line sensor outputs from the IA1 module as specified shall not apply when the multiple configuration is implemented. Interfaces applicable to the multiple configuration including line restoral/reconfiguration functions shall be controlled by the IE module in accordance with 3.3.1.8 and 3.5 via its interfaces with the IB2 modules and the IC1 module.

3.3.1.3.2.6 Separated Transmitter and Receiver Site (RT, RR) Configuration - When a control facility operates with main and standby transmitters and receivers at separate transmitter and receiver sites a IB2 module is required at each site along with its associated IB1, IA2 and IA1 modules. The IB2 - IB1 module remoted interfaces for this configuration shall be as specified in 3.3.1.4.1. The IB2 modules shall provide for the transmission of RT and RR site voice and data RCE operational and control functions, RMM and data to and from the control facility over the RT, RR and remoting IB2 - IB1 lines. The corresponding IIB2 module at the control facility shall combine the voice and data in a single channel module interface with the position equipment. The IIB2 shall also combine the data from the RT and RR sites into a single IIG module interface.

3.3.1.3.2.7 PTT Confirmation and Squelch Break Functions - The PTT confirmation signal to be encoded for transmission to the control facility IIB2 module shall be an output of a logic element in the IB2 module which shall receive both the PTT confirmation from the IB1 module per Appendix C and the receiver squelch break signal from the associated receiver on the same frequency which was keyed by the PTT signal. When both signals are present, the output of the logic element shall be encoded as a PTT confirmation message. If the squelch break signal is not accompanied by a PTT confirmation input, the output of the logic element shall be encoded as a squelch break message and transmitted to the control facility.

Both the PTT confirmation and squelch break indications shall appear on separate interfaces with the IB1 module as specified in Table 7 Item 6 and Item 7. In considering the squelch break indication as an input to the PTT confirmation signal, the time delay of the "opening" of the squelch circuit, as a function of the received signal strength and the time constant of the AGC circuit, will be in the order of 120 milliseconds. This delay shall be considered in the design of the logic element to insure that the output PTT confirmation signal is a valid sum of the two inputs.

3.3.1.4 Radio Equipment Interface Module (Type IB1) - The IB1 module shall provide direct compatible interfaces with designated radio transmitters, receivers or transceivers, as assigned by site adaptation data, in accordance with Appendix C. The IB1 module shall also interface with its assigned IB2 module as specified in 3.3.1.3.1.1.1 and Table 7. The IB1 module shall provide the required conversions of the audio and control signals applied at IB2 module interfaces, establish the appropriate interface state at this interface for functions originating in the IB1 module or associated radio equipment, and establish the electrical connections between these interfaces and the associated radio equipment to implement the required radio operational and control functions required by this specification. Each IB1 module shall provide the capability to interface with a main and standby transmitter, a main and standby receiver, and an optional transceiver in lieu of a standby fixed frequency transmitter and receiver. The switchover mechanisms required to change from main to standby equipment, including antenna switchovers, shall be provided by the IB1 module under control of the appropriate signal at the IB2 module interface. The IB1 module shall provide optional wiring to interface with a remote IB2 module as specified and illustrated in 3.3.1.4.1. All physical connections between the IB1 module and the assigned transmitters, receivers or transceivers shall be in accordance with Appendix C.

3.3.1.4.1 Module IB2 - IB1 Remoting Function - The separated transmitter and receiver site configuration covered under 3.3.1.3.2.6 shall utilize module IB2 - IB1 remoting arrangements as specified herein and as illustrated in Figure 6. Data signals shall be transmitted in both directions to provide the IB2 - IB1 module interfaces required in Table 7. The remoting circuits shall be transparent to these interface requirements. In addition to providing both voice and simultaneous data transmission, these circuits shall contain provisions for detecting a cable failure and provide the IB2 modules at each facility with a remoting line failure alarm. Functional reconfiguration at the control facility resulting from this alarm state shall be in accordance with 3.3.2.3.2.6 and 3.4. The contractor may utilize any proven cost effective technique in providing simultaneous voice and data transmission over the remoting facilities which meet the requirements of Table 7 and 3.10 of this specification. The use of an additional line or trunk, other than the two lines or trunks per frequency pair is prohibited.

3.3.1.5 Trunk Restoral Switch and Audio Bridging Module (Type IC1) - The IC1 module shall be a non-blocking solid state switch under control of the IE module as specified in 3.3.1.8 and 3.5. This module shall have a capability to accommodate from two (2) to twenty-four (24) line terminations and a corresponding number of equipment terminations. The line terminations shall be the IA1 modules and the equipment terminations shall be the line ports of the IA2 module (2 per IA2 module). Techniques used to implement the IC1 module shall avoid a common failure mode that would result in more than one channel (2 frequencies) being made inoperative for more than 20 milliseconds after detection of a failure regardless of the configurations established. The IC1 module shall perform the combining and decombining of the voice/audio inputs and outputs of the IA2 modules on a single trunk or a group of trunks. The IC1 module shall perform the following functions:

(a) Connect any one of up to 24 IA1 modules to any other one of the 24 IA1 modules. This connection shall be considered as a line-to-line connection.

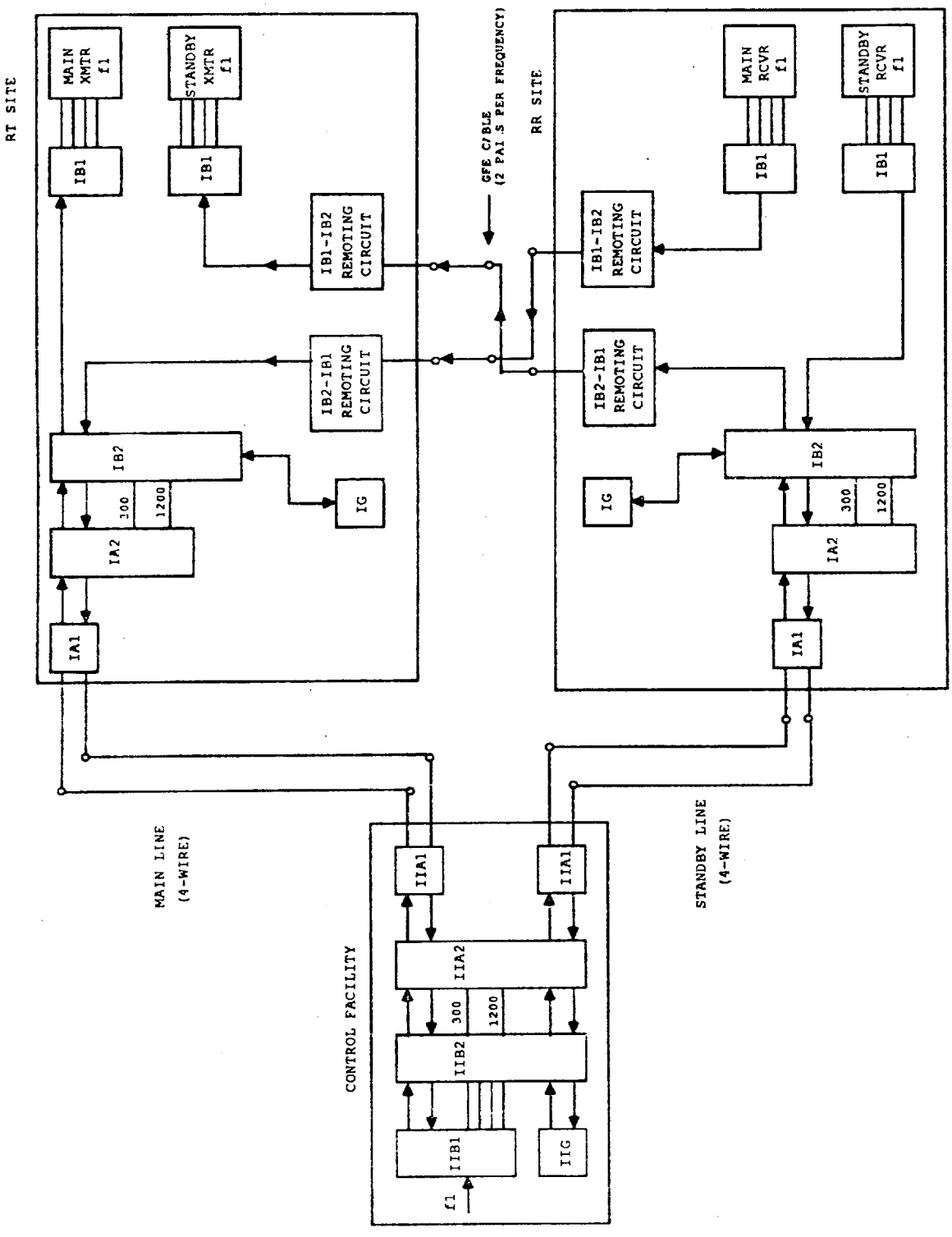

FIGURE 6
MODULE IB2 - IB1 REMOTING
CIRCUITS AND APPLICATION

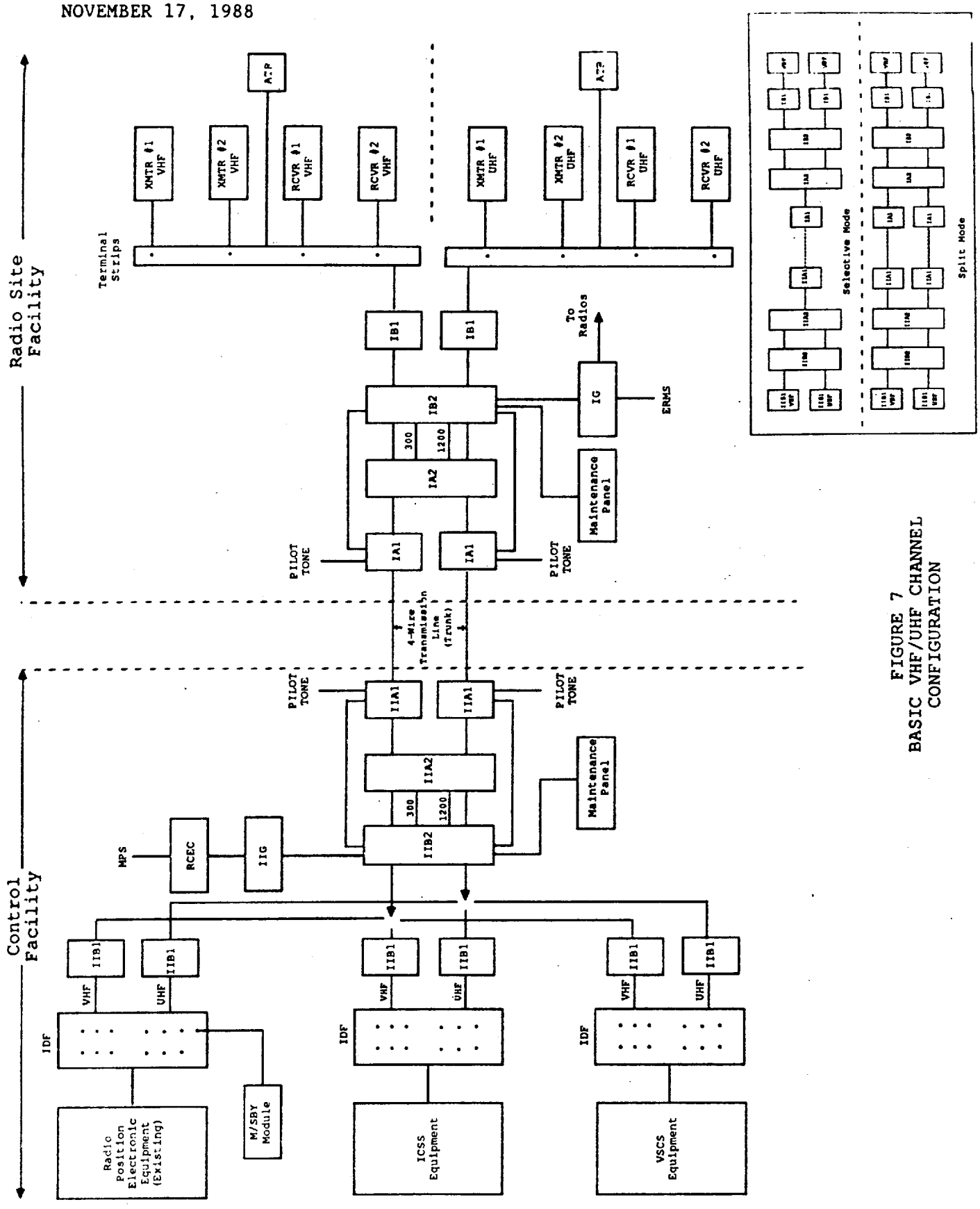

FIGURE 7
BASIC VHF/UHF CHANNEL CONFIGURATION

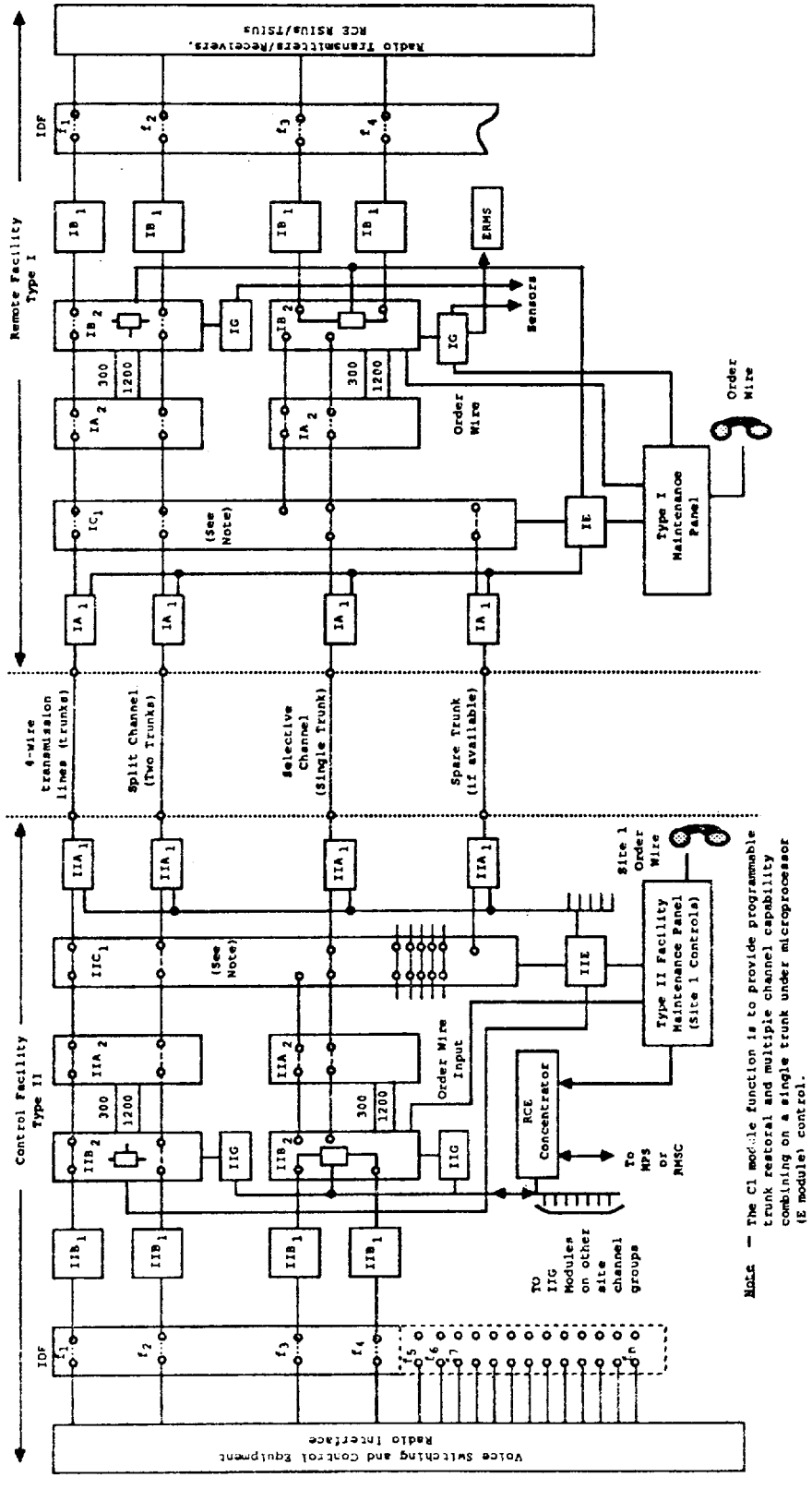

Note — The C1 module function is to provide programmable trunk restoral and multiple channel capability combining on a single trunk under microprocessor (E module) control.

FIGURE 8
ILLUSTRATIVE EXAMPLE OF A TYPICAL SITE
CHANNEL CONFIGURATION
(1 SPLIT CHANNEL, 1 SELECTIVE CHANNEL, AND ONE SPARE TRUNK)

(b) Connect any one of up to 24 IA1 modules to any line port of up to 12 IA2 modules (24 total ports). This interconnection shall provide a connection between the IA1 module and the assigned IA2 module line port without an adjustable amplifier in the connection. The insertion loss introduced by any path established through the IC1 module shall not exceed 0.5 dB. Hum, noise and other transmission parameters shall meet the requirements of 3.10. The module shall be capable of simultaneously operating with all 24 X 24 paths connected. The assignment or reassignment of port to port connections to be established shall be based on site adaptation data, and configuration commands under control of the IE module. Any connection once so established shall permit each IB2 module to combine its two frequencies on a single audio port for selective channel operations or split both frequencies and perform all other functions as specified in 3.3.1.3.2.

(c) The capability to combine the outputs and inputs of any 2 and up to 6 IA2 modules out of 12 on any one out of 24 audio ports of the IA1 modules shall be provided. All combinations within these maximums shall be accommodated and simultaneously handled. The insertion loss of the bridged connections, regardless of the number of IA2 modules combined, shall not exceed 1.0 dB. All IA2 modules and associated IB2 modules configured in this manner shall be capable of performing all functions specified in 3.3.1.2 and 3.3.1.3.2 with the exceptions specified below:

1. Data interchange with the control facility and data for combined configurations shall be under control of the IE modules as specified in 3.3.1.8, and 3.4

2. Responses to line sensor alarms and line failure conditions shall be a function of the IE module as specified in 3.3.1.8

3. Modules IC1, IA2 and IB2 interfaces with the IE module shall be such that the site maintenance panel shall be able to establish any test configuration in or controlled by any IB2 module contained in the combined configurations.

(d) In addition to the switching functions, IC1 module may, at the contractor's option, also provide the control for the connection and disconnection of the 2225 Hz pilot tone to the transmitting pair of the trunk circuit at the IA1 module in lieu of the IB2 module control specified in 3.3.1.3.1.1.3 in order to associate such control with any trunk restoral action implemented by the IE module as specified in 3.3.1.8. If not integrated with the IC1 or a subset of the IC1 module, this function may be implemented as a separate module unit controlled by the IE module.

(e) This module may, at the contractors option, also be utilized to control the connections between the line sensor outputs from each IA1 module to the IE or alternately to designated IB2 modules. Responses to alarm conditions however shall be under control of the IE module when included in the site configuration.

3.3.1.5.1 Trunk Recovery - The IC1 module under IE module control shall establish the required connections as determined by site configuration adaptation data and the restoral/recovery procedures specified in 3.3.1.8, 3.4, and 3.5. All connections established shall remain in that state until a reconfiguration/restored or maintenance command is inputted from the IE module. In the event of a IE module failure all connections established in the IC1 module shall remain in the state existing prior to the failure.

3.3.1.5.2 IC1 Module Interconnection Monitoring - Connections established within the IC1 modules shall be monitored by the IE module. If a failed path is detected, the IE module shall reestablish the connection via spare switch linkages within 20 milliseconds. Other failures detected (including but not limited to, short circuits and misrouted paths) shall not result in any degradation of more than one channel. The IC1 modules shall be designed to provide this capability by containing sufficient paths to accommodate this requirement based on failure rate and reliability considerations, for all modules sized to meet the delivery requirements of the contract schedule.

3.3.1.5.3 Configurations Employing IC1 Modules - IC1 modules shall be provided in accordance with the contract schedule. The criteria for their use and size is dependent upon the number of trunks and IA1 modules required to serve the radio equipment complement at the site and the number of RCE channels. A typical configuration employing a IC1 module is illustrated in Figure 8.

3.3.1.6 (Reserved)

3.3.1.7 (Reserved)

3.3.1.8 Channel Configuration Controller Module (Type IE) - A module configuration which includes IC1 module shall also include a IE module. The IE module shall be a stored program controller capable of performing the local control functions and interface functions as required in 3.3.1.5 based on site adaptation data and also resulting from direct data interchange with the IIE module at the control facility as specified in 3.4. Software or firmware for this module shall meet the requirements of 3.5. The IE module, in addition to the control functions required above, shall as a minimum, perform the following functions:

(a) Establish channel configurations in the IC1 modules and reconfigurations as determined by stored adaptation data and by commands and adaptation data updating received from the IIE module at the control facility.

(b) Perform trunk restoral functions in accordance with stored recovery procedures based on line sensor output data in accordance with 3.5 and 3.6 and based on the alarm threshold values of Table 6.

(c) Provide operational and fault data collection storage and reporting capability of RCE module status and assignments as specified in 3.5 and 3.6.

(d) Provide stored diagnostics and control programs for the purpose of local and remote testing of modules and module configurations and an interface with the site maintenance panel for local testing, in accordance with 3.6.

(e) Reserved.

(f) Provide I/O capability at the site maintenance panel to permit a portable entry and read-out device to enter configuration and reconfiguration commands, perform diagnostic testing and perform other functions as specified in (c) and (d) above, 3.5, and 3.6.

(g) Provide a direct data channel interface with a IF module when utilized in the site configuration as specified in 3.3.1.9.

(h) When 2 and up to 6 channels are combined on a single trunk, the IE module shall combine the data inputs generated by the IB2 modules that share the trunk to form a single composite message for transmission to the control site via the assigned trunk and based on site adaptation data. This data bridging shall correspond to the audio bridging configuration covered in 3.3.1.5. Messages received from the control facility over the common trunk shall be distributed to the module(s) assigned to the channels that share the common trunk so that each may perform the actions required. Techniques utilized for the implementation of the data bridging function shall avoid a common failure mode that would result in more than one channel (2 frequencies) being made inoperative for more than 20 ms, regardless of the configuration established.

(i) Provide data exchange with the site maintenance panel as required to display maintenance information and to support testing and maintenance functions in accordance with 3.6.

<u>3.3.1.8.1 Electrical Characteristics</u> - The IE module shall consist of a microprocessor, memory elements, associated logical elements and I/O capabilities required to perform all control and interfacing functions defined above and in this specification for the maximum sized site shown in Table 5. The contractor shall allocate hardware, firmware and programmable software, as dictated by his design approach, to meet these requirements. Software and firmware

designs and other characteristics shall meet the requirements of 3.5. The microprocessor selected shall be of proven design and used in control functions similar to those required for this application. In addition, it shall have a demonstrated MTBF of at least 5000 hours. The storage elements consisting of RAM, ROM and PROM devices, as applicable, shall be solid state and shall have a demonstrated failure rate equal to or exceeding representative values contained in MIL-HDBK-217 for the environment in which they will be utilized. Prior to utilization in the first article deliverable IE module, the contractor shall submit design and performance and reliability data on the selected processor and memory units for government review and approval. The contractor shall not procure these elements for the RCE until such approval is received. Government response to this request for approval will be within thirty (30) days from the time of submittal. A modified IE module shall be provided when an IF module is required. The modifications required are as specified in 3.3.1.9. If the modifications cannot be implemented by simple on-site wiring and programming options a special module designed for this application may be substituted and shall be designated as a IE(F) module.

3.3.1.9 Master Configuration Controller Module (Type IF) - When two or more IE modules are required by the site configuration, and as required by the contract schedule, a IF module shall be provided to permit master control of site configuration/reconfigurations, site maintenance and common storage of site adaptation data, and fault data collection normally resident in each IE module. This IF module shall interface with the site maintenance panel in lieu of the IB2 or IE modules and shall have the same capability required in 3.3.1.8. Sizing of the IF module shall accommodate the maximum module configuration shown in Table 5. The IE modules shall retain control of all functions specified under 3.3.1.8 with the following exceptions:

(a) Interfaces with the site maintenance panel

(b) Storage and update of site adaptation data

(c) Initiation of channel configuration/reconfiguration actions

(d) Initiation of fault isolation and diagnostic actions

(e) Storage of the site data collected by the IE modules as required in 3.5

The functions under (a) through (e) shall be assignable to the IF module. The functional, interface, and electrical requirements of the IF module shall be as specified in the following sub-paragraphs.

3.3.1.9.1 Interfaces - The IF module shall interface with the IE modules via a processor to processor high speed data channel. These interfaces shall provide data interchange between these modules to implement the functions specified in 3.3.1.9.2. Based on site adaptation data, the IE modules shall control the frequency channels (trunks) to be utilized for the interfacility connections. Data interchange between IF and IIF modules shall be via the IE and IIE module interfaces in accordance with 3.4.

3.3.1.9.2 IF Module Functions - The basic function of the IF module shall be to provide common storage and associated software to permit effective control of the IE modules in the site configuration. Control of the configurations established by each IE module and central control for testing and fault isolation for all module configurations at the site shall be provided by this module via the interfaces specified in 3.3.1.9.1. In addition to the functions specified in 3.3.1.9 Items (a) through (e), the following functions shall be performed:

(a) Store and classify data collected by the IE modules in accordance with 3.5

(b) Store diagnostic programs for testing and fault isolation for each configuration controlled by the IE modules as required by 3.6

(c) Store site configuration and reconfiguration maps for each IE module configuration including line, equipment and frequency assignments

(d) Respond to data entry commands from the maintenance panel

(e) Respond to requests for data from the control facility IIF modules via the IE module interface and change and update site adaptation data for each IE module in accordance with messages received from the IIF modules in accordance with 3.4 and 3.5

(f) In the event of a site power interruption or outage recovery, provide the control for initialization, recovery and restart procedures of the IE modules and the required program down loading in accordance with 3.5. Non-volatile storage shall be provided as required for this purpose

3.3.1.9.3 Electrical Characteristics - The electrical characteristics of the IF module shall comply with the requirements of 3.3.1.8.1 as applicable to the functions and interfaces required under 3.3.1.9, 3.3.1.9.1 and 3.3.1.9.2.

3.3.1.10 RMS/RMM Interface Module (Type IG) - The IG module shall monitor sensors and perform the required RMS control functions associated with the radio transmitter and receiver equipment served by one IB2 module. In addition, the IG module shall be capable of interfacing with, either by direct connection or via an interfacility microprocessor (figure 8), government furnished environmental and security sensors associated with the facility. Monitoring, encoding, initiation of alarms, report messages, polling message handling, response message transmission, remote maintenance control functions, etc., shall be in accordance with NAS-MD-790, paragraph 3.4 of this specification, and Appendix D. The IG module shall interface with the maintenance panel to monitor RCE status information and with its associated IB2 module for purposes of receiving and transmitting data through the 300 baud data channel. The interface between the IG and IB2 module shall include provisions for checking the accuracy of the data transferred and for controlling its flow.

If feasible, and as determined by the contractor's module designs, functions and firmware/software required for the RMM/RMS operations may be allocated to other RCE modules in the channel configuration providing the IG module design and that of other modules remain standard and interchangeable for all site applications indicated in Table 5.

3.3.2 Type II Modules - Type II modules shall have identical functions with their corresponding Type I modules except as modified herein.

3.3.2.1 Trunk Termination Module (Type IIA1) - All requirements specified for the IA1 module under 3.3.1.1 shall apply except as follows:

(a) The loop back connection shall not be provided.

3.3.2.2 Filter And Modem Module (Type IIA2) - All requirements specified for the IA2 module under 3.3.1.2 shall apply except as follows:

(a) Type I facility data loop back shall be initiated by a local maintenance action at the Type II facility.

(b) Tone and noise suppression alarm conditions shall apply to the Type II RCE configuration with separate alarms provided for Type II and Type I RCEs.

(c) References to the IB2 and IC1 modules shall apply to the equivalent Type II modules, as appropriate.

3.3.2.3 Channel Control Module (Type IIB2) - The IIB2 module provides encoding and decoding functions for a channel which in general are the reverse of IB2 module functions; i.e., PTT is encoded by the IIB2 module and decoded by the IB2 and PTT confirmation is encoded by the IB2 and decoded by the IIB2, etc. In addition, there are differences in interfaces and control mechanisms. To the maximum extent feasible, however, logic elements common to both the IB2 and IIB2 modules shall be identical. Some variations in control logic and interface logic, including firmware or software variations may be introduced to satisfy the following requirements and the requirements of 3.4.

3.3.2.3.1 Interfaces - The IIB2 module shall interface with two IIB1 modules, one IIA2 module, IIC1, IIE, IIG modules, when included in the control facility configuration, and two IIA1 modules. Interfaces with IIA1, IIA2, IIC1 modules shall be equivalent to IB2 module interfaces. Functions of the IIG module and its interfaces with the IIB2 module and external RMS/MPS shall be as specified in 3.3.2.10.

3.3.2.3.1.1 Interface Characteristics - Module IIB2 electrical and functional interface characteristics for each of the interfaces required in 3.3.2.3.1 shall be as defined in the following subparagraphs.

3.3.2.3.1.1.1 IIB1 Module Interfaces - Each IIB2 module shall be assigned to operate with two IIB1 modules as determined by site adaptation data. Each IIB1 module shall interface with its assigned IIB2 module such that the following functions are performed via these interfaces:

(a) Voice Transmit and receive connections (4-wire) for the frequency assigned.

(b) PTT operate and release status and confirmation signals.

(c) Receiver muting control and confirmation signals.

(d) Trunk PTT lockout signal.

(e) Main/Standby transmitter and receiver selection control and confirmation signals.

(f) Dual control site frequency override in accordance with 3.3.2.3.2.4.

(g) Transceiver selection and tuning control signals and tuning confirmation signals.

(h) Receiver AGC voltage.

Paragraph 3.3.2.4 provides the functional interface requirements between the IIB1 modules and the control facility voice switching system. The IIB2 module shall encode and transmit messages to corresponding IB2 modules or IIE modules for each control signal at the IIB1 module interfaces and decode messages from the corresponding IB2 modules or IIE module and apply the appropriate interface levels at the IIB1 module interfaces. Data interchange between IB2 and IIB2 modules and IE and IIE modules shall be in accordance with 3.4. The electrical characteristics of the IIB2-IIB1 module interfaces shall be as specified in Table 10.

3.3.2.3.1.1.2 IIA2 Module Interfaces - The requirements of 3.3.1.3.1.1.2 shall apply with the following exceptions:

(a) The split/selective operation of the bridging switches shall be under control of commands received from the control facility maintenance panel and automatic switching responses to line sensor alarm conditions as specified in Table 9, as applicable to the IIB2 - IIA2 interfaces.

(b) Substitute IIB2, IIA2 and IIA1 as module identifications used in that paragraph and in Table 8, as appropriate.

3.3.2.3.1.1.3 IIA1 Module Interfaces - The requirements of 3.3.1.3.1.1.3 shall apply except references to Type I modules shall be changed to Type II modules as appropriate.

3.3.2.3.1.1.4 Bridging and Control Module Interfaces - Module IIE interfaces with the IIB2 module shall be as required for each of these interfacing modules to perform their required functions. The functions of the IIB2 module shall be as specified in 3.3.2.3.2. The functions required by the IIE module shall be as specified in 3.3.2.8.

3.3.2.3.1.1.5 RMS/MPS Interface Module (Type IIG) - The IIB2 modules shall directly interface with IIG modules to provide the RMS/MPS functions and interfaces as specified in 3.3.2.10.

3.3.2.3.1.1.6 Maintenance Panel Interface - IIB2 modules shall interface with the RCE Type II facility maintenance panel to provide local and remote testing and maintenance capability. Features and capabilities to be provided by the maintenance panel shall be as specified in 3.6. Alternately the maintenance panel shall interface with the IIE module when included in the site configuration in the same manner as specified for the IE module.

TABLE 10

IIB2 - IIB1 MODULE INTERFACES - ELECTRICAL CHARACTERISTICS

FUNCTIONAL INTERFACE	REQUIRED ELECTRICAL CHARACTERISTICS
1. All Interfaces	Standard interfaces shall be provided as required in this table regardless of the characteristics of voice switching system. The IIB1 module shall provide the required conversions as specified in 3.3.2.4.
2. Voice Receive From IIB1 Module	(a) Impedance - 600 ohms +/- 60 ohms, balanced. (b) Level - 0 dBm +/- 1.5 dB. (Assumes a dynamically regulated amplifier is included in the position equipment which maintains its set output level within +/- 1.5 dB over A dynamic input range of +/- 30 dB.) (c) Noise - Total noise including hum and noise level shall not exceed +23 dBrnC. (d) Crosstalk-Not greater than -72 dB. (e) Reserved. (f) Frequency Response - 300-3000Hz +/- 3 dB of the 1000 Hz response. Response shall continuously decrease above 3000 Hz and below 300 Hz. (g) Harmonic Distortion - Less than 2.5 percent.

TABLE 10 (CONTINUED)

FUNCTIONAL INTERFACE	REQUIRED ELECTRICAL CHARACTERISTICS
3. Voice Transmit to IIB1 Module	(a) Impedance - 600 ohms +/- 60 ohms, balanced. (b) Level - 0 dBm +/- 1.5 dB (split or selective) (c) Noise - Total noise including hum and the effects of the 300 baud tones shall not exceed -65 dBmC at the nominal voice output level of 0 dBm. (d) Crosstalk - Crosstalk between IIB2 module voice interfaces shall not be greater than -72 dB (e) Tone and Noise Suppression - The voice input to the IIB2 module from the IIA2 module, in the presence of tones and noise shall, reduce the levels specified in (b) above by 20 db in accordance with 3.3.1.2.3.
4. Push-To-Talk Signal	Unambiguous DC voltage on PTT interface from IIB1 Module
5. Push-To-Talk Release	Unambiguous DC voltage on PTT interface from IIB1 Module

Note: All RCE noise measurements are made with a C-message weighing filter, AGC's within the path set to nominal gain, and data tones removed.

TABLE 10 (CONTINUED)

FUNCTIONAL INTERFACE	REQUIRED ELECTRICAL CHARACTERISTICS
6. Remote Mute Signal From IIB1 module	Unambiguous DC voltage on Remote Mute interface
7. Remote Mute Release from IIB1 module	Unambiguous DC voltage on remote mute interface.
8. Main/Standby Control Signal from IIB1 Module	(a) Transmitter/Receiver Control: Main - Unambiguous DC voltage on M/S transmitter or receiver control interfaces. Standby - Unambiguous DC voltage on the above interfaces.
9. PTT Confirmation From IIB2 Module	An unambiguous DC voltage on PTT confirmation interface shall indicate that PTT has been completed.
10. Main/Standby Selection Confirmation Signals from IIB2 Module	A distinct, unambiguous voltage on transmitter or receiver selection confirmation interface
11. PTT Trunk Lockout Signal From IIB2 Module.	An unambiguous DC voltage on trunk lockout interface.
12. Transceiver Tuning Signals from IIB1 Module and Other Transceiver Control Signals	Tuning signals and other control signals generated by the control equipment shall be passed through the IIB1 module to the IIB2 module via a transceiver tuning control interface. Precise signal characteristics in the forward and return paths over this interface shall be as determined by the contractor based on the characteristics of the GFE transceivers and their remote tuning mechanisms. PTT, PTT confirmation, and PTT trunk lockout, plus voice inputs and outputs shall, however, be in accordance with items 1 through 10 above. The type and location of transceivers shall be as specified in the contract schedule.
13. Receiver AGC voltage from IIB2 module.	AGC voltage as decoded by the IIB2 module.

3.3.2.3.2 Functional Requirements - The IIB2 module shall provide an integrated capability to operate with its interfaces as required under 3.3.2.3.1 and to perform internal functions as specified in the following paragraphs. The contractor shall allocate these functions to hardware, firmware, or software to provide a cost effective module assembly.

3.3.2.3.2.1 Selective/Split Voice Transmit/Receive Control - The IIB2 module shall provide transmit and receive voice transmissions between the IIB1 and IIA2 modules and 4-wire switching and bridging functions as specified in 3.3.1.3.2.1 with the following exceptions:

(a) The IIB2 module connections established by its switching network shall be under the local facility maintenance panel control, line sensor response control as specified in Tables 6 and 9 and applicable, firmware or software and site adaptation data.

(b) Voice loop back capability at the IIB2 - IIB1 module interface is not required.

3.3.2.3.2.2 Decoding and Encoding Functions - The encoding and decoding functions shall be as specified in 3.3.1.3.2.2 except that Type II modules shall be substituted for Type I modules and the term "control facility" shall be replaced by "Type I" facility. Functional interfaces shall be as specified in 3.3.2.3.1 rather than 3.3.1.3.1.

3.3.2.3.2.2.1 Decoding and Correlation of Line Sensor Alarms - Each Type IIB2 module shall provide for the decoding and correlation of line sensor outputs specified in Table 6 for the IIA1 module assigned to work with that module in accordance with site adaptation data. The alarm information transmitted to the IIB2 module in accordance with Table 6 shall also be decoded and correlated with the line sensor outputs from its associated IIA1 modules. As determined by line and error rate correlation, the IIB2 module shall perform the same operations as required in Table 9 except as modified below:

(a) A failed line classification shall result in transmitting a trunk lockout signal to the IIB1 module until normal levels are sensed and a "clear-to-send" signal is received from the Type I facility. This capability shall be programmable based on site adaptation data.

(b) The IIB2 module shall not transmit the "clear-to-send" signal to the Type I facility until a "clear-to-send" signal is received from the Type I facility and the line sensor levels from its associated IIA1 modules have returned to normal levels.

(c) All line sensor alarms, as received from the Type I facility and are locally received from the IIA1 modules, shall be displayed at the control facility maintenance panel for the duration of the alarms via the associated IIB2 module interface. The capability to establish the same or different configuration of the channel from those automatically performed under Table 9, at both the Type II and Type I facility, shall be provided at the Type II facility maintenance panel. When line sensor outputs restore to normal values and "clear-to-send" signals have been received and transmitted, the alarm indications shall automatically be extinguished. Indicators on the maintenance panel, however, shall be provided with a capability to display the condition that an alarm had occurred but subsequently cleared itself.

3.3.2.3.2.3 Voice Loop Back Function - Provisions shall be made in the IIB2 module to accept a remote voice loop back command from the control facility maintenance panel to establish the connections required by 3.3.1.3.2.3. The capability to insert test and measuring equipment at the maintenance panel in both transmitting and receiving voice paths when either in the split or selective configuration shall be provided. When in this mode a trunk lockout signal shall be applied to the IIB1 module interfaces and the voice receive paths towards the IIB1 modules at this interface, shall be muted.

3.3.2.3.2.4 Dual Control Site Frequency Override Functions - For the case covered under 3.3.1.3.2.4 the IIB2 module at the secondary facility shall apply a trunk lockout signal to the IIB1 modules upon receipt of the encoded lockout signal from the Type I facility. The receive voice path towards the IIB1 module shall not be muted. The IIB2 module configuration required when two control facilities are separated by a distance not exceeding 3 miles of direct cable and each control the same transmitter/receiver combination at a Type I facility on the same trunk, shall be as

specified for the multiple IIB2 module single trunk configuration covered in 3.3.2.3.2.5. In this case the PTT trunk lockout signal shall be locally provided by the IIB2 module as specified in that paragraph and transmitted to the IIB2 module at the secondary facility. The lockout signal shall not be transmitted to the primary control facility, as designated by site adaptation data. Upon receipt of the lockout signal at the secondary site the IIB2 module shall apply a PTT trunk lockout signal to its IIB1 modules in the same manner as specified above. The receive voice paths of the locked out IIB1 modules, as in the first case, shall not be muted. If the secondary facility is in a PTT state and the primary facility also goes to a PTT state the IIE module shall override the secondary PTT (preempt and release) and return a PTT trunk lockout signal to the secondary IIB2 module.

3.3.2.3.2.5 Multiple IIB2 Modules Assigned to a Single Trunk - Up to six (6) IIB2 modules may be assigned to a single trunk, based on site adaptation data, via the IIA2 and IIA1 modules under control of the IIE module. The IIE module shall perform group control and formatting of messages as covered in 3.3.2.8 and 3.4, based on the encoded individual outputs of the IIB2 modules in the configuration and the reverse decoding and distribution of received messages from the IB2 or IE module at Type I facility. Voice transmit and receive functions of each IIB2 module shall be combined by the IIC1 module under control of the IIE module as described in 3.3.2.5 and 3.3.2.8. Responses to line sensor outputs from the IIA1 modules and line sensor alarm data received from the Type I facility as specified in 3.3.2.3.2.2.1 shall not apply when the multiple configuration is implemented. All restoral and channel reconfiguration control, shall instead, be provided by the IIE module in accordance with 3.3.2.8 and 3.5 via its interfaces with the IIA1, IIB2 and IIC1 modules.

3.3.2.3.2.6 Separated Transmitter and Receiver Site (RT, RR) Configuration - The IIB2 modules shall provide the controls and IIB1 module interfaces required to satisfy the requirements of 3.3.1.3.2.6 and 3.4. Operational configurations in the IIA2 module resulting from trunk failures between sites shall be as specified in Table 11. The IIB2 module shall combine the transmit and receive paths associated with condition 4 of Table 11 on to the IIB1 module interfaces via its switching and bridging network.

3.3.2.4 Voice Switching and Control System Interface Module (Type IIB1) - The IIB1 modules shall provide the functional interfaces between the voice switching and control equipment and the IIB2 modules. Interfaces with the IIB2 modules shall be in accordance with Table 10 and interfaces with the voice switching and control equipment's radio position electronic equipment shall be as specified in Appendix B and NAS-IR-41024201. The IIB1 modules shall interface with five types of radio position electronic equipment; i.e., four-channel and solid state equipment presently installed at en route and terminal control facilities, ICSS which will be installed at AFSSs and terminal facilities replacing existing equipment, the future VSCS equipment which will be

TABLE 11

IIA2 - MODULE CONFIGURATIONS REQUIRED
IN RESPONSE TO TRUNK FAILURE CONDITIONS

FUNCTIONAL INTERFACE	REQUIRED ELECTRICAL CHARACTERISTICS
1. All Trunks Operational	Voice transmit and receive plus 300 and 1200 baud data on Line Port 1
2. RT Trunk Fails (RT-RR Remoting Trunks Operational)	Voice transmit and receive plus 300 and 1200 baud data on Line Port 2
3. RR Trunk Fails (RT-RR Remoting Trunks Operational)	Same as (1) above
4. RT-RR Remoting Trunks Fail (RT and RR Trunks Operational)	Voice transmit and transmitting sides of 300 and 1200 baud modems on transmitting side of Line Port 1. Voice receive and receive sides of 300 and 1200 baud modems on receive side of Line Port 2. When the RT-RR trunks are restored as sensed by the IIB2 module, the IIB2 module shall automatically restore the IIA2 module configuration to condition (1). In the failed state, PTT confirmation shall be the squelch break signal only. The IIB2 module shall interpret this signal, in the absence of the combined PTT keyer voltage signal and the squelch break, as a PTT confirmation by correlation with the RT-RR line failure alarm.

installed at en route and Regional TRACON facilities as a future replacement of the present four channel equipment, and the TCS which will be installed in Air Traffic Control Towers (ATCT). The IIB1 module shall provide the logical and electrical conversions to and from these equipments based on the functional and electrical characteristics required at the IIB2 module interfaces as specified in Table 10. The engineering models of the radio position electronic equipment to be fabricated by the contractor for the factory testbed in accordance with 3.11 shall be used to test and evaluate the IIB1 module/position equipment interface functions and specific logical designs required to provide and respond to the specified IIB2 voice and signal/control interface requirements. IIB1 modules designed for each type of position equipment shall be interchangeable with those at any other facility in which that type of radio position electronic equipment is installed. Interchangeability of IIB1 modules designed for different types of position equipment is required. Functional requirements applicable to the IIB1 module shall be as specified in the following subparagraphs. Subset nomenclatures for each application have been assigned for illustrative purposes. The contractor, subject to government approval, may assign other subset identifications consistent with 3.3.

The contractor shall provide a quick connect/disconnect intermediate distribution frame (IDF) designed to terminate the radio position electronic equipment interfaces and IIB1 module interfaces. The sizing of the IDF shall be consistent with the requirements of Table 2, plus 25% expansion capability for each unit delivered in accordance with the contract schedule. The contractor shall cable all IIB1 module interfaces to the RCE side of the IDF. The government will provide all connections to the position side. Cross connections shall be made by the contractor in accordance with site adaptation data consistent with terminations illustrated in Figures 7 and 8.

<u>3.3.2.4.1 Four Channel Equipment</u> - The IIB1 module shall be designed to interface with the relay panels associated with the existing four channel equipment. Interface functions and electrical characteristics to and from the relay panels for each frequency shall be in accordance with Appendix B. The IIB1 module shall contain adjustable amplifiers and attenuators as required to provide the appropriate input/output audio levels based on the IIB2 module interface characteristics specified in Appendix B. It also shall contain the required logic to convert the output/input control signals from and to the four-channel relay panels as required to satisfy the standard IIB1 input/output control signal interfaces with the IIB2 modules as specified in that Appendix.

<u>3.3.2.4.2 ICSS Equipment</u> - IIB1 Interface functions and electrical characteristics to and from the ICSS radio position equipment for each frequency shall be in accordance with Appendix B. The conversion equipment in the IIB1 module required to provide standard interface levels towards the IIB2 module as specified in the Appendix, shall correspond to the requirements of 3.3.2.4.1, as applicable.

3.3.2.4.3 VSCS Equipment - VSCS equipment is planned to be installed at en route centers and regional TRACONS and be responsive to "sector suite" communications requirements. These requirements may impose some variations in the manner of handling air/ground communications and the configuration of radio frequency channels. Regardless of the techniques utilized in the VSCS for implementing the control functions associated with voice air/ground communications the RCE shall, however, provide standard interfaces with the VSCS. The contractor shall fabricate engineering models of two VSCS simulated radio positions and their control electronics to be utilized in the RCE test bed as test equipment in accordance with 3.11 and the contract schedule and the design assumptions contained therein. The IIB1 module interfaces with the engineering model shall be according to interfaces specified in Appendix B and NAS-IR-41024201.

3.3.2.4.4 TCS Equipment - TCS equipment is planned to be installed in Air Traffic Control Towers and be responsive to "tower" communication requirements between controllers or specialists and aircraft via air-ground radio equipment. The IIB1 module interfaces with the TCS shall be according to interfaces specified in Appendix B and NAS-IR-41024202.

3.3.2.5 Trunk Restoral Switch and Audio Bridging Module (Type IIC1) - Requirements for the Type IIC1 module shall be as specified for the IC1 module in 3.3.1.5 through 3.3.1.5.3. References in those paragraphs to Type I modules shall be considered as references to the equivalent Type II modules, as applicable.

3.3.2.6 Reserved.

3.3.2.7 Reserved.

3.3.2.8 Channel Configuration Control Module (Type IIE) - The IIE module shall provide equivalent functional and electrical characteristics to those specified in 3.3.1.8 and 3.3.1.8.1, except as adapted for utilization in a Type II module configuration. The IIE module shall provide Type II facility/configuration adaptation data and program storage, and shall also store the adaptation data and operational programs for its associated remote IE module(s). Adaptation data changes and updating requirements and procedures, shall be as specified in 3.5. Channel configuration and reconfiguration functions for both the Type II and Type I facility module configurations, including software down loading capability, shall be under control of the IIE module including restoral procedures required in response to trunk, equipment or power failures.

When two or more IIB2 modules are assigned to the same trunk via the IIE, IIA2, and IIA1 modules, the IIE module, upon detection, of a PTT message from the IIB2 modules, shall transmit a trunk lockout signal to each IIB2 except the one on which the PTT signal originated. The IIB2 module shall apply the appropriate trunk lockout interface signal to the IIB1 module interface as specified in 3.3.2.3.1.1.1. If the voice switching and

control equipment position PTT lockout circuit permits a broadcast PTT signal on more than one frequency at specific positions, the IIE module shall permit more than one PTT signal to be transmitted on the trunk. The PTT trunk lockout signal shall not be transmitted to the IIB2 modules in this case and shall not inhibit the simultaneous transmission of PTT signals and audio associated with any of the frequencies selected at a position. The IIE module shall return a trunk lockout to any other IIB2 module attempting to PTT the frequency assigned to that trunk which is not programmed for simultaneous keying.

The IIE module shall also collect and store operational and fault data, as required in 3.5, for both the control facility and remote site configurations. In addition to the MPS/RMS polling and data exchange for RCE and radio equipment at type I sites, the IIE module shall have the capability to request RCE status from its associated IE module. The IIE module site configuration data base and site status shall be continually maintained in this manner for the purpose of implementing channel recovery procedures in the event of an RCE failure condition. Remote site fault and alarm reporting capability via a similar connection between the IIE and IE modules, established either automatically or by manual initiation at the Type II facility maintenance panel shall be provided as required in 3.6. When a IIF module is included in a Type II facility configuration, allocation of the IE and IIE module storage of data, operational programs and initiation of configuration and reconfiguration actions and procedures shall be as specified in 3.3.2.9.

3.3.2.9 Master Configuration Controller Module (Type IIF) - When two or more IIE modules are required by the Type II module configuration and as required by the contract schedule, a IIF module shall be provided. The functions and characteristics required for this module shall be as specified for the IF module in 3.3.1.9 through 3.3.1.9.3, except as tailored to apply to Type II modules and the Type II facility sizing characteristics specified in Table 5. In addition, a configuration data link shall be provided to the VSCS interface as specified in NAS-IR-41024201. Peripheral equipment shall be provided as required by the contractor's design to provide for centralized test and maintenance capability in accordance with 3.6, and centralized channel assignment configuration/reconfiguration capability as required in 3.5. Failure of the IIF module shall however, not inhibit the capabilities of the IIE and IE modules in performing control and restoral functions and associated reconfigurations specified in 3.3.1.8, Item (b) and as applicable, in 3.3.2.8.

3.3.2.10 RMS/MPS Interface Module (Type IIG) - Requirements specified for the IG module in 3.3.1.10 shall apply with the following exceptions and additions:

(a) RMS data path connections through the IIG and associated IIB2 modules shall be subject to a priority interrupt scheme controlled by the IIB2 module as specified in 3.4.

(b) Each IIG module shall have a unique address. The RCE/MPS interface design shall have the capability to store these addresses and the associated frequency identifications, trunk identification, site identification and radio transmitter/ receiver identifications, as site adaptation data for each IIG module and its associated IIB2 module.

(c) The contractor shall prepare a preliminary interface control document (ICD) in accordance with the contract schedule, covering the RMS processor/RCE bus or multiplex interfaces with the IIG modules including storage requirements for the module IIG address codes and site adaptation data as a function of the sizing parameters in Table 2. The ICD shall provide protocols and procedures for RMS data interchange between the RMS processor and the IIG modules and between IIG and IG modules consistent with the requirements of NAS-MD-790. The final ICD, subject to validation during the first article testing in the factory test bed, shall be prepared and submitted in accordance with the contract schedule. The content and format of the ICD shall be in accordance with FAA-STD-025.

(d) Type IIG modules shall be integrated in a Type II facility configuration as required by the contract schedule and as illustrated in Figures 7 and 8.
(e) Type IIG modules are not required to monitor sensors external to RCE.

3.3.3 Other Special Modules - Special modules included in the contractor's design which are required to implement the specification requirements, particularly section 3.2.1 and its subparagraphs, and which have unique interface and functions not specifically covered in this section or Appendices B, C and D shall be provided and clearly defined in the design data submitted in accordance with the contract schedule. Subject to government approval, the contractor shall assign appropriate nomenclatures to these modules consistent with paragraph 3.3 or alternately, as a continuation of the alphabetical sequence used in this specification.

3.3.4 Typical Module Configuration - Typical module configurations which will be utilized for en route, terminal and FSS air-ground operations are described and illustrated in the following subparagraphs. Deliverable configurations and module quantities however, including first article configurations, shall be as specified in the contract schedule. As specified in 3.3 and 3.8, prewired assemblies shall be provided to permit field installation personnel to establish the required configuration by plug-in module insertion in these assemblies with minimum on-site wiring and cabling.

3.3.4.1 Basic VHF/UHF Selective or Split Channel - All RCE channel module configurations shall contain the basic two frequency selective or split channel capability. A typical channel is illustrated in Figure 7. Variations from the basic channel configuration to accommodate the need to reconfigure in response to trunk failure conditions and utilizing IC1, IE, IIC1 and IIE modules is illustrated in Figure 8. The channel configurations illustrated in Figure 7 and 8 are applicable to all operational environments, i.e., en route, terminal and FSS.

3.3.4.2 Two or More Basic Channels at a Control Facility - Most control facilities will require more than the one basic channel as illustrated in Figure 8. In accordance with Table 2, a control facility could have up to 225 frequencies (AFSS) which would require 56 channel configurations of the type illustrated or 19 configurations of the type illustrated in Figure 10.

3.3.4.3 Two or More Basic Channels Combined on a Single Trunk - Where two and up to six channels are combined on a single trunk, the required control facility configuration and radio site configurations will correspond to those illustrated in Figures 9 and 10. These configurations shall provide selective keying, selective remote muting and PTT trunk lockout as required by this specification and as illustrated in the figures.

3.4 Data Interchange Requirements

3.4.1 General - The RCE modules shall provide the capability to exchange data as indicated in other sections of this specification and as required in this section. This section identifies the functions that are to be implemented through digital techniques and delineates those characteristics that are essential to meet the operational control and support functions of this specification. Specific techniques and details of implementation not otherwise specified are left to the option of the contractor.

3.4.1.1 Purpose of Data Interchange - Data interchange is required in the RCE to implement operational, control, reconfiguration and support functions. Operational functions are functions associated with the initiation of a radio transmission and therefore have specific time limitations. Examples of operational functions include push-to-talk (PTT), squelch break, and confirmation signals. Control functions are those that establish conditions which control modes of transmissions and include main/standby switchover, selective muting, and transceiver tuning. An additional function involves the support of operations external to the RCE. The system to be supported is the Remote Maintenance Monitoring System (RMMS).

All the above functions require data interchange between IB2 and IIB2 modules and between IE and IIE modules. The data shall flow over RCE channels using modems located in the IA2 and IIA2 modules and trunk interface equipment located in the IA1 and IIA1 modules.

The following paragraphs specify the general characteristics of the digital RCE channels to be provided. Paragraph 3.4.2, below, provides more detailed characteristics of the functions to be performed and the messages required to support those functions. Paragraph 3.4.3 includes projections of the traffic volume that the design must support.

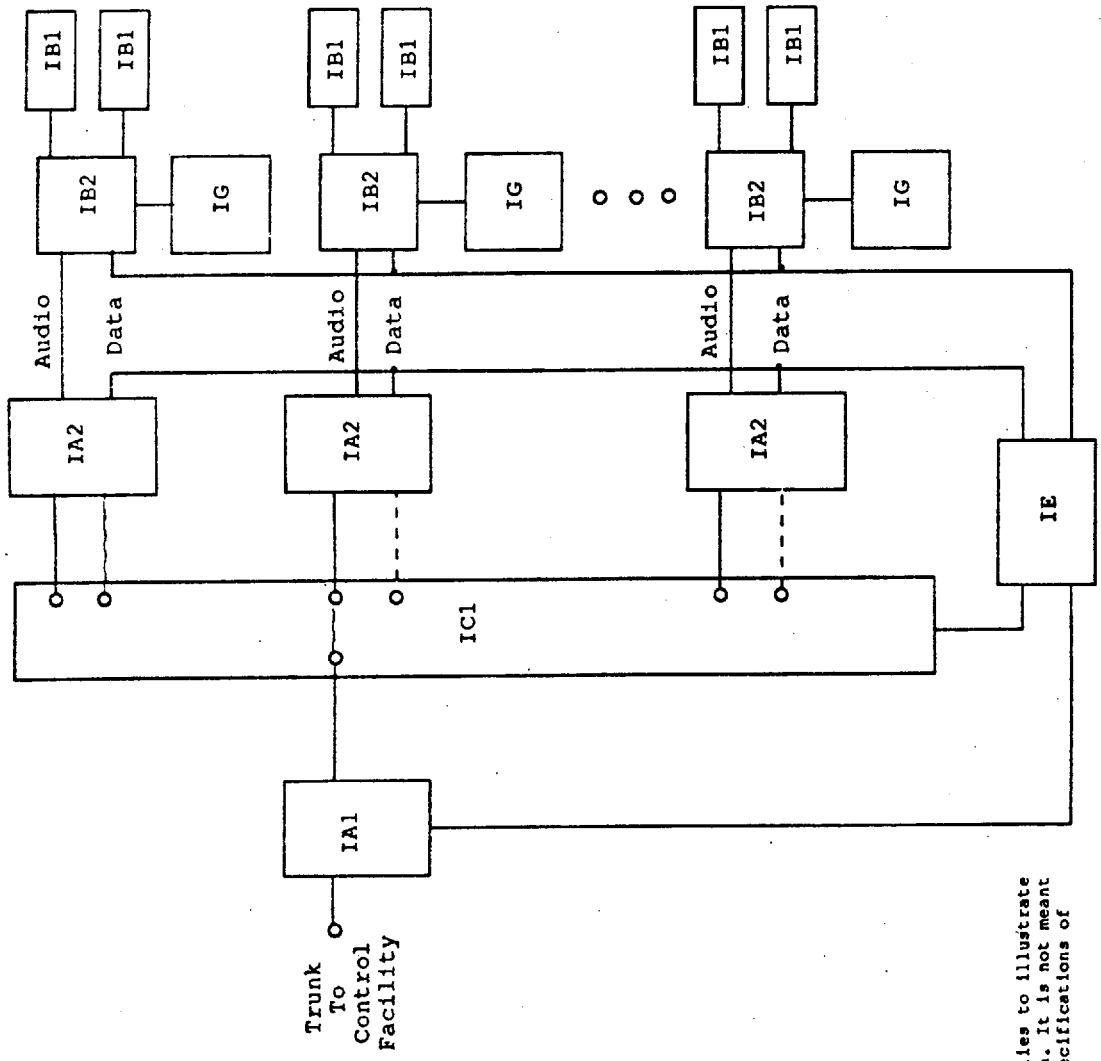

NOTE: This drawing applies to illustrate the configuration shown. It is not meant to supersede module specifications of this document.

FIGURE 9

2 AND UP TO 6 IB2 MODULES ON A SINGLE TRUNK RADIO SITE CONFIGURATION

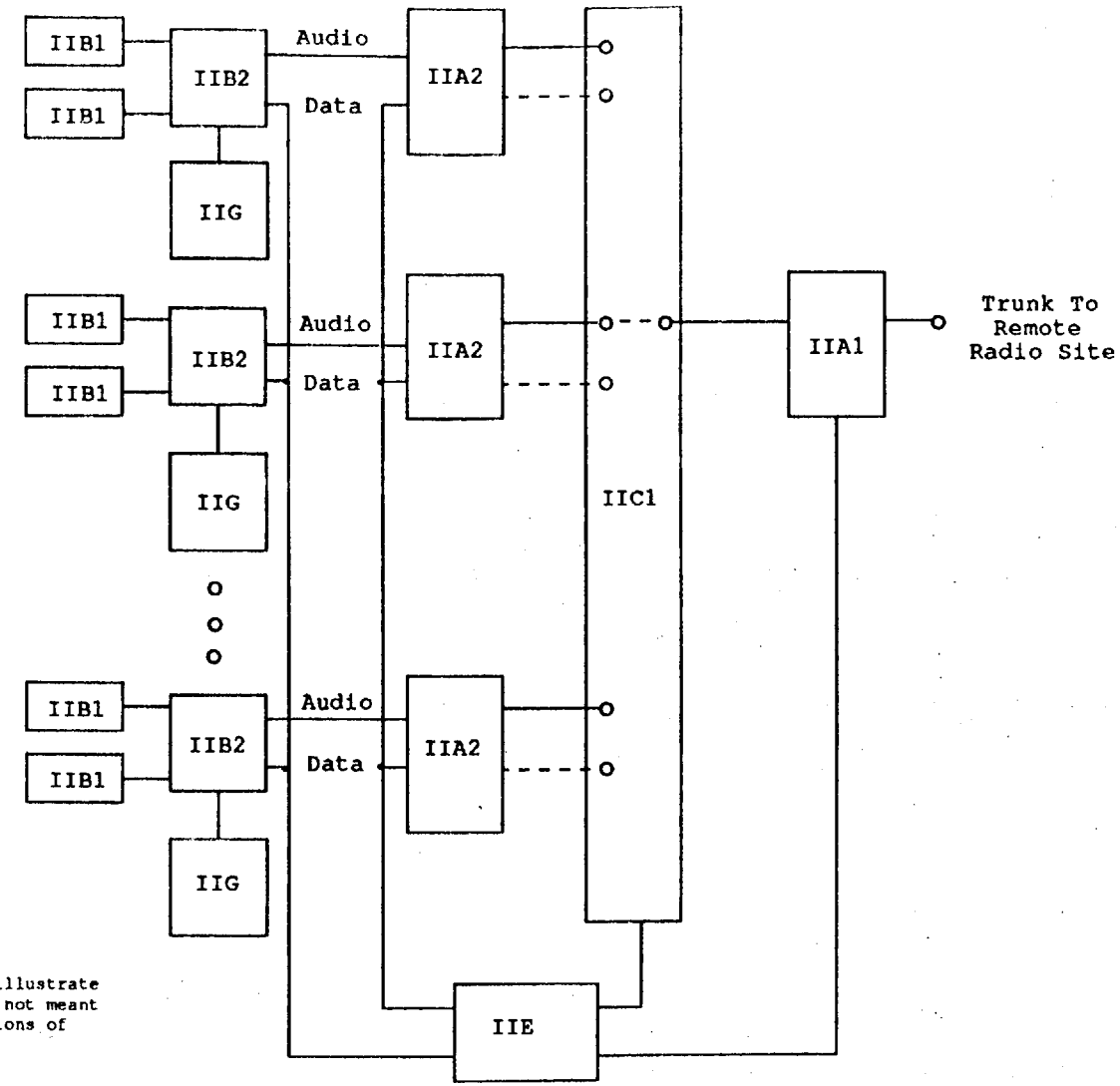

NOTE: This drawing applies to illustrate the configuration shown. It is not meant to supersede module specifications of this document.

FIGURE 10

2 AND UP TO 6 IIB2 MODULES ON A SINGLE TRUNK

CONTROL FACILITY CONFIGURATION

3.4.1.2 Data Interchange Characteristics - The RCE modules shall provide a data interchange capability within each RCE channel. The following paragraphs describe the general characteristics of the data paths to be provided.

3.4.1.2.1 Data Rates - Each RCE channel shall include the capability for data transmission at 300 and 1200 bauds. The 300 baud capability shall be frequency shift keyed. Suitable filtering shall be provided so that voice and data may be transmitted simultaneously without operational interference (see section 3.3). The 1200 baud capability shall also use FSK techniques but the wider band width requirements of 1200 baud transmission preclude the simultaneous transmission of voice signals. Under quiescent conditions, the equipment shall be in the voice plus 300 baud mode. The equipment design shall provide the capability to select the 1200 baud capability by internal logic within the IIA2 and IA2 modules to allow transmission of certain operational commands. Switching between modes at both the initiating facility and its associated facility shall be accomplished within 5ms. At the receiving end of the channel, disappearance of the 300 baud carrier shall be interpreted as the command to switch to the 1200 baud mode. Disappearance of the 1200 baud carrier shall be interpreted as the command to return to the 300 baud plus voice mode. Switchover between modes shall be accomplished within 5 ms after disappearance of a carrier. Disappearance of both carriers for 3 sec. or more shall be interpreted as a channel failure.

3.4.1.2.2 Mode - All data transfers shall be in asynchronous mode characters. Each character shall consist of one start interval, eight data intervals and one stop interval. Duration of intervals shall be nominally 1/300 sec. for 300 baud operation and 1/1200 sec. for 1200 baud operation. Tolerance on the interval duration shall be established by the contractor to assure that all contributing factors do not produce signal distortion, as defined in EIA Standard RS-363, in excess of 40% at the receiving modem. Duration of the stop interval may be extended to accommodate external data sources which use longer stop intervals per character and to accommodate minor variations in data rate.

3.4.1.2.3 General Message Format Constraints - The system shall provide the capability to exchange messages of four types: operational messages, control messages, reconfiguration messages and support messages. operational messages are messages associated with the initiation of a radio transmission or the acceptance of a received radio transmission. Such messages shall be kept as short as possible and shall be given priority over other messages due to the time constraints on the operational functions. Control messages are messages that affect the processing of subsequent operations. Reconfiguration messages are reconfiguration commands initiated by firmware or software routines and programs. Support messages are messages to be transmitted for the RMMS. Specific information as to the format of the various types of messages is included in section 3.4.2 and specific information as to the command functions of the messages are specified in 3.2.1.

3.4.1.2.4 Code - Every message shall consist of a number of 8 bit characters for transmission in asynchronous mode. Due to the limitations on message length, operational messages, control messages and configuration messages shall be comprised of characters for which each bit in each character frame has some meaning. Where specific alphabetic or numeric information is required in the message, the ASCII code set, as specified in ANSI standard X3.4 with bit sequence as specified in FED-STD-1010, shall be used. Possible bit assignments for operational and control messages are illustrated in section 3.4.2.1.1.

The RCE shall transport messages in support of the RMMS requirements. Codes used for such messages shall be in accordance with NAS-MD-790.

3.4.1.2.5 Accuracy Control - Every operational, control and configuration message shall be ended with a Cyclic Redundancy Check (CRC). The number of bits to be used in the CRC shall be determined by the contractor to assure that no more than one in one million such messages is received with an undetected error(s). An acknowledgement (ASCII "ACK") shall be returned for each such message accurately received. A negative acknowledgement (ASCII "NAK") shall be returned in response to any such message received containing an error(s). The negative acknowledgement shall cause the sending B2 module or E module to repeat the message. In the event the error condition persists and the number of repeats exceeds one out of 1000 messages attempted, the system shall interpret the condition as a channel failure. Signal characteristics including distortion, error rates and switching times shall meet the performance requirements of paragraphs 3.10.3.2 through 3.10.3.6 and 3.10.4.

The RCE shall include provision for checking the accuracy of support messages (RMMS messages) and for controlling its flow.

3.4.1.2.6 External Support Interface - The interface between the B2 and G modules shall be in accordance with EIA RS-232. The Request to Send (RS) pin shall be used by the G modules until the appropriate signal appears on the Clear to Send (CS) pin.

3.4.2 RCE Functions and Message Characteristics - The RCE functions that require the transfer of digital information between a control facility(ies) and remote facilities may be described as operational, control reconfiguration functions and support functions. The operational and control functions require a short message structure to allow the information to be transferred and action completed quickly to support a voice transmission. The

reconfiguration and support functions involve messages of longer duration. RMMS systems shall be supported by providing a channel that is virtually transparent to the code, format and protocol of the system.

3.4.2.1 Operational and Control Functions - While operational and control functions differ in their characteristics and time considerations, the messages that control them shall adhere to a common format.

3.4.2.1.1 Operational and Control Message Format - It is the intent of this specification to require that the contractor develop message formats that meet all the system requirements and at the same time allow his implementation to operate as efficiently and effectively as possible. The following is provided to serve as an example to illustrate the characteristics of a common format.

A message in the suggested format will normally consist of four 8 bit characters as illustrated in Fig 11. These are transmitted in the familiar asynchronous form with one start interval and one stop interval to identify the characters and provide synchronization.

The first four information bits of the first character in the suggested example contain a command code. Typical command codes required are:

Push-To-Talk (PTT) (Selective and Split Operation)
Push-To-Talk (PTT) Release
PTT Confirmation
Squelch Break
Selective Mute and Mute Confirmation
Transmitter Main to Standby Switchover and Confirmation
Receiver Main to Standby Switchover and Confirmation
Transceiver Tune and Confirmation
Loop Back
Trunk Lockout
Dual Control Facility Frequency Override

The remaining four bits of the first character and eight bits of the second character are used to indicate, in this example, to which frequencies of the maximum configuration of 12 frequencies on a single trunk the code applies. Thus, a PTT command code with one bits in the 5th and 7th positions of the first character would indicate that the PTT applies to the first and third of the assigned frequencies.

CHARACTER	INTERNAL	CONTENT
1	Start 1 2 3 4 5 6 7 8 Stop	Command Code
2	Start 1 2 3 4 5 6 7 8 Stop	Channel Select
3	Start 1 2 3 4 5 6 7 8 Stop	Spare or AGC Voltage
4	Start 1 2 3 4 5 6 7 8 Stop	CRC Code

FIGURE 11
SUGGESTED MESSAGE FORMAT
(SHORT)

Release of a function is ordered by sending the command code with zero bits in the frequency positions to be released. The third character is left for future assignment and the fourth character in the example is a Cyclic Redundancy Check (CRC).

The Transceiver Tune function requires additional information. For example, the frequency to which the transceiver is to be tuned. It is suggested that this item be encoded in ASCII characters and transmitted in six character positions starting with the third character. This will yield a longer (9 character) format with the CRC in the 9th character position (Figure 12).

The suggested message format has been devised to minimize the message length while at the same time allowing only two standard message sizes. Since no start-of-message characters is provided, the start interval of the first character must be interpreted as the start-of-message. This leads to the possibility that the message receipt functions could be triggered by a noise burst. Special format checks shall be made to avoid inadvertent acceptance of such noise bursts. In the event a noise burst should be accepted as a message, the CRC check should show it to be invalid resulting in a NAK response. The control protocol shall provide for this situation. The message contains no special symbol to indicate the end of the message or location of the CRC. These shall be identified by character count, and the longer messages shall be identified by recognition of the Operation Code(s) specifying the longer length.

3.4.2.1.2. Specific Messages - All the operational and control functions are triggered by events or combinations of events local to or remote from the facility that must execute the function. The purpose of data transmission of operational and control messages is to transfer knowledge of such triggering events from the source of those events to the location that must take action on them. This section will list such events indicating the message operations command name, the source of information, the purpose, the data rate for transmission, the precedence with respect to other messages and any special characteristics required of the protocol that controls the flow of such messages.

3.4.2.1.2.1 Push-to-Talk (PTT) Command - Push-to-Talk results from the depression of a microphone push-to-talk key by an air traffic controller or flight service specialist. Its purpose is to key a radio transmitter operating on a selected frequency. At his option, the controller or specialist may select multiple frequencies, in which case several transmitters are to be keyed one for each of the selected frequencies.

CHARACTER	INTERNAL	CONTENT
1	Start, 1, 2, 3, 4, 5, 6, 7, 8, Stop	Command Code
2	Start, 1, 2, 3, 4, 5, 6, 7, 8, Stop	Channel Select
3	Start, 1, 2, 3, 4, 5, 6, 7, 8, Stop	Frequency 1st Digit
4	Start, 1, 2, 3, 4, 5, 6, 7, 8, Stop	Frequency 2nd Digit
5	Start, 1, 2, 3, 4, 5, 6, 7, 8, Stop	Frequency 3rd Digit
6	Start, 1, 2, 3, 4, 5, 6, 7, 8, Stop	Frequency 4th Digit
7	Start, 1, 2, 3, 4, 5, 6, 7, 8, Stop	Frequency 5th Digit
8	Start, 1, 2, 3, 4, 5, 6, 7, 8, Stop	Frequency 6th Digit
9	Start, 1, 2, 3, 4, 5, 6, 7, 8, Stop	CRC Code

FIGURE 12
SUGGESTED MESSAGE FORMAT
(LONG)

The PTT signal arrives at the RCE as a contact closure or voltage on a wire connection from the radio position electronic equipment. The signal enters the RCE through a IIB1 module which passes it to a IIB2 module. When the PTT state appears, the IIB2 module shall generate a digital message containing a PTT operation command, "one" bits in specific positions to indicate which frequencies are to be keyed and a Cyclic Redundancy Check (CRC) code. When the PTT state disappears (PTT release), another message shall be generated containing the PTT operation code, "zero" bits in all the frequency positions and ending with a CRC.

PTT messages shall be transmitted to the remote facility at 1200 bauds. Since the normal (idle line) mode is 300 bauds plus voice, a control signal shall be supplied to the IIA2 module to cause it to switch to its 1200 baud mode. Loss of the 300 baud carrier is the signal to the receiving IA2 module (at the remote site) to shift to its 1200 baud mode, enabling it to receive an operational or control message. The message shall be demodulated in the IA2 module and sent, bit by bit, to the IB2 or IE module which shall check it for accuracy, return an ACK, (at 300 bauds) to the control site and provide a voltage level, via the appropriate IB1 module(s) to key the designated transmitter(s). If the accuracy check should indicate that the received message contained errors, a NAK shall be returned and no further action shall be taken until an accurate command message is received. After transmitting the PTT message, the IIB2 module shall command the IIA2 module to shift back to the 300 baud plus voice mode, to enable the transfer of voice signals and RMS data.

If the IIB2 or IIE module should be in the process of transmitting another operational or control message when the PTT is received, the PTT message shall be delayed until ACK is received for the current message. If the circuit should be in use for transmission of a support system message, that message shall be interrupted by gating off the data input and interrupting the 300 baud carrier. If the message being interrupted is a polling message from the MPS (300 bauds) interrupting the carrier and switching to the 1200 baud carrier shall cause the corresponding IA2 module at the remote site to switch to its 1200 baud mode, thereby enabling transmission of the PTT message. After completion of the PTT message, the circuit shall revert to its 300 baud plus voice mode. The control protocol for the RMMS transfer will initiate a repeat of the interrupted message.

For configurations at which multiple frequencies share a trunk, PTT messages will be generated by all IIB2 modules that are assigned to the interfaces. The IIE modules shall accept messages from trunks, up to 6 IIB2 modules, and combine these bit-by-bit to form a single message containing "one" bits in all the frequency positions representing the frequencies on which the PTT signals occurred. While the PTT messages generated should be roughly simultaneous, the IIE module shall be designed to accommodate a time differential of up to 10 ms between them to allow for variations in the arrival time of the PTT signals from the voice switching equipment.

3.4.2.1.2.2. PTT Confirmation Command - PTT confirmation command is an indication that the PTT has reached a transmitter, and that the transmitter is actually keyed. Circuitry shall be included in the IB2 module to recognize the logical "and" combination of the PTT voltage that keys a transmitter and the squelch break of the corresponding receiver. When the combination of these two signals is recognized, the IB2 module shall generate a digital message containing a PTT confirmation operation command, "one" bits in specific positions to indicate the frequency or frequencies involved and a CRC code. When either the PTT voltage or the squelch break level falls, a PTT release confirmation message shall be generated containing the PTT confirmation operation command, "zero" bits in the appropriate positions, and a CRC code.

The PTT confirmation message shall be transmitted to the control facility at 300 bauds. Since the circuit from the IA2 to the IIA2 will always be in the 300 baud plus voice mode, no mode switching is required. After demodulation in the IIA2, the message shall be sent to the IIB2 which shall perform the accuracy checks and return the appropriate ACK or NAK to the remote site. If the message contains errors, the NAK response shall be returned, the message shall be rejected and the message shall be retransmitted. Return of the ACK or NAK shall take place in the 300 baud mode.

If the IB2 module should be in the process of transmitting another operational or control message, the PTT confirmation message shall be delayed until an ACK is received for the current message. If the circuit should be in use by the RMMS function for transmission of a routine report message, the RMMS message shall be interrupted. Protocol in the RMMS elements will provide for retransmission of such messages. If the circuit should be in use by the RMS system for transmission of an alarm message, the PTT confirmation message shall be delayed until the completion of the RMS alarm message. The existence of an alarm message will be indicated by a voltage level on one of the pins in the EIA-RS-232 interface connector.

For installations at which multiple frequencies share a trunk, PTT confirmation messages will be generated by all IB2 modules that are assigned to the trunk. The IE and IIE modules shall accept messages from up to six (6) B2 modules and combine these bit-by-bit to form a single message containing "one" bits in all the frequency positions representing the frequencies keyed. This combination shall be performed "on the fly" to minimize time delay. While the PTT confirmation messages from the IB2 modules should be roughly simultaneous, the IE modules shall be designed to accommodate a time differential of up to 20 ms between them to allow for variations in time constants and differences in squelch settings.

3.4.2.1.2.3 Remote Site Trunk Lock Out Command - When dual control sites share the same transmitter a feature is needed to inhibit either site from simultaneously attempting to key the transmitter. When dual facilities access the common transmitter over separate trunks, the knowledge of which facility initiated the transmission is at the remote site. A special message shall be returned to the secondary site during PTT transmission from the primary site to cause it to be locked out.

The IB2 module on the secondary channel shall recognize the condition that the associated transmitter is being keyed by the primary channel and that the keying signal was not generated in that IB2 and that a squelch break is present on the corresponding receiver. When this combination of signals is recognized, the IB2 on the secondary channel shall generate a message consisting of a lock out operation command, "one" bits in specific positions to indicate the frequency or frequencies involved and a CRC code. A PTT confirmation signal, however, shall be returned to the primary site. Another message, consisting of the lockout operation command, zero bits in the specific frequency positions, and a CRC code, shall be returned to the control facility if any of the lockout conditions terminate, to indicate the end of the lockout condition. The trunk lock out message shall be transmitted at 300 bauds in the same manner as the PTT confirmation message. Precedence relationships with other messages shall be the same as those for the PTT confirmation message. The override capability for dual control site frequency control as required in 3.2.1 and 3.3, shall be designed into this data interchange function.

3.4.2.1.2.4 Squelch Break Command - The Squelch Break command is an indication that a signal is being received and the source of the signal is not a PTT on the associated transmitter. It shall be used to gate the audio to the associated frequency channel interface.

Circuitry in the IB2 module shall recognize the logical "and" combination of a squelch break and the inverted PTT voltage for the corresponding transmitter as received via the IB1 module interface. Thus the message will be initiated only when there is squelch break and the corresponding RCE controlled transmitter is not transmitting. Upon recognition of these conditions the IB2 module shall generate a message containing the Squelch Break command operations, a "one" bit in the specific position to indicate the frequency involved, a binary representation of the AGC voltage from the receiver and a CRC code. Termination of the squelch break conditions shall cause the generation of another message containing the Squelch Break operation command, "zero" bits in the various frequency positions, "zero" bits in the AGC voltage positions and a CRC code.

The Squelch Break message shall be transmitted to the control facility in the same manner as the PTT confirmation message. Precedence relationships with other digital messages shall be the same as for PTT confirmation.

For installations where several receivers share the same trunk, the IE module shall accept Squelch Break messages from IB2 modules associated with the various receivers and pass a composite message to the trunk. The IE module in outputting the composite message shall accommodate up to 20 ms total time difference between the first and last of the individual squelch break messages. The number of receivers shared by a single trunk shall be assigned by local adaptation.

3.4.2.1.2.5 Remote Mute Command - When multiple channels share a trunk, the muting of receivers shall take place at the remote site. When a remote mute command is recognized, the IIB2 modules shall generate a digital message consisting of a remote mute operation command, "one" bits in selected positions to indicate the frequencies to be muted and a CRC code. When a remote mute level falls, indicating that the function is to be terminated, another message shall be generated containing the remote mute operation command, "zero" bits in positions representing the frequencies that should not be muted and a CRC code.

Remote mute messages shall be transmitted to the remote site at 1200 bauds in the same manner as that described for the PTT message (Paragraph 3.4.2.1.2.1). At the remote site the IB2 module shall recognize the message, perform the accuracy checks, return ACK or NAK to the control facility and generate appropriate DC levels through the IB1, and adapter modules to control the mute function.

The precedence relationships of the remote mute message shall be the same as for the PTT message (Paragraph 3.4.2.1.2.1).

3.4.2.1.2.6 Transmitter Main/Standby Command - The transmitter Main/Standby function gives an air traffic controller the ability to transfer operation on any selected frequency to a second transmitter.

The Main/Standby command shall enter the RCE at the IIB1 module interface as specified in Appendix B. The IIB1 module shall pass the signal to the IIB2 module. When the signal appears, the IIB2 shall generate a digital message consisting of a Transmitter Main/Standby operation code, "one" bits in positions representing frequency channels for which the second transmitter is to be used and "zero" bits in positions representing those frequency channels for which the primary transmitter is to be used, and a CRC code.

Transmitter Main/Standby messages are transmitted to the remote site at 1200 bauds in a manner identical to the PTT message (Paragraph 3.4.2.1.2.1). The precedence relationships of the transmitter Main/Standby message are the same as those described for the PTT message (Paragraph 3.4.2.1.2.1).

3.4.2.1.2.7 Receiver Main/Standby Command - The Receiver Main/Standby function provides the capability to switch operation between two receivers.

The signal shall pass through the IIB1 module to the IIB2. Upon detection of the voltage change, the IIB2 module shall create a message consisting of a Receiver Main/Standby operation code, "one" bits in positions representing those frequency channels for which the second receiver is to be used and "zero" bits to indicate those for which the primary receiver is to be used, and a CRC code.

The message shall be transmitted to the remote site at 1200 bauds. The means for transmission and the precedence relationships shall be identical as for the PTT message (Paragraph 3.4.2.1.2.1).

3.4.2.1.2.8 Tune Transceiver - The purpose of the Tune Transceiver function is to provide a future capability to cause a remote transceiver to tune to a specific frequency.

The Tune Transceiver function is initiated at the radio position where pushbuttons are provided to initiate the selection and tuning procedure and to key in the desired frequency. The RCE interface shall be in accordance with Appendix B and NAS-IR-41024201.

Upon recognition of the voltage level change on the command interface, the IIB2 module shall generate a message containing a Tune Transceiver operation code, a "one" bit and a series of "zero" bits in positional notation format to indicate which of a maximum of 12 transceivers served by the channel is being addressed, a series of seven digits of ASCII coded information to indicate the frequency desired and a CRC code.

The resulting message shall be transmitted to the remote site at 1200 bauds. The transmission scheme and precedence relationships shall be the same as for the PTT message (Paragraph 3.4.2.1.2.1). At the remote site, the Transceiver Tune message shall be accepted by the IB2 module which shall respond with an ACK or NAK response, and relay the frequency assignment to the assigned transceiver via the IB1 module interface with the transceiver as specified in Appendix C.

3.4.2.1.2.9 Transceiver Not Ready - Upon start of the tuning cycle, a remote transceiver returns a signal to the user's operating position to indicate that the transceiver is in its tuning cycle. At the end of the cycle, removal of the signal indicates that the transceiver is ready for operation on the new frequency.

These signals shall interface the RCE at the IB1 module interface. On detection of transition to the level indicating that the transceiver is cycling, the IB2 shall generate a message consisting of a Transceiver Not Ready operation code, a "one" bit in the appropriate position to indicate the channel involved and a CRC code. On return to the normal level, the IB2 shall generate another message consisting of the Transceiver Not Ready operation code, a "zero" bit in the channel position and a CRC code.

These messages will be transmitted to the control facility at 300 bauds, following the same technique and precedence relationships as the PTT Confirmation message (Paragraph 3.4.1.2.2).

Upon receipt of each of these messages, the associated IIB2 at the control facility shall make the appropriate accuracy checks and return an ACK or NAK as appropriate. Upon receipt of a valid message, the IIB2 shall generate a voltage level on the interface to the position equipment.

3.4.2.1.2.10 Remote Loop Back - As an aid to maintenance, a remote loop back function is required. In response to a command entered at the control facility maintenance panel, the 4-wire line shall be switched at the remote site. Upon detection of the command signal the IIB2 or IIE module shall generate a message consisting of a loopback operation command, "one" bits in positional notation to indicate which channels (frequencies) are to be looped back and a CRC code. When a return to normal voltage level is detected, another message shall be generated with "zero" bits in the specific positions to indicate which channels are to be returned to their normal operation status.

These messages shall be sent to the remote site at a 1200 baud rate following the technique and assuming the same priority relationship to other messages as the PTT message (Paragraph 3.4.2.1.2.1).

At the remote site the messages shall be detected by the IB2 or IE, module which shall accomplish the required switching in response to the Loop Back initiation and termination messages.

3.4.2.1.2.11 RCE Maintenance Data Collection - Maintenance data indicating the operability of various RCE modules shall be collected and displayed continuously at the maintenance panel at each RCE site. A summary of the data collected at each remote RCE site shall be transmitted periodically to the associated control site for display at its maintenance panel. The data shall be transmitted to the control facility at 300 bauds, using the data paths associated with the various voice channels. The specific data to be collected and displayed and the format for transmission shall be determined by the contractor and shall be subject to approval by the FAA.

Alarm conditions indicating operation outside of the normal design range for the RCE modules, shall be recognized by the IB2 or IE modules (IIB2 or IIE modules at control facilities) for immediate display at local maintenance panel. Alarm conditions recognized at remote sites shall be encoded and transmitted to the associated control facility for display, as those conditions are recognized. RCE alarm messages shall be transmitted at a high priority level, ahead of any RMMS alarm messages, but shall not interrupt operational RCE messages.

All alarm conditions recognized and selected RCE maintenance data shall be transferred to a IG or IIG module for relay to the MPS. Message exchange procedures and formats for all messages required by this specification or by the contractor's design shall be documented in an interface control document (ICD) to be prepared by the contractor.

3.4.2.2 MPS Message Characteristics - Messages from the MPS are expected to be polling messages and will have a length of around 10 to 20 characters. The purpose of these messages is to solicit reports from the RMS microprocessors at the remote sites. Messages from the RMS microprocessors are of two types, reports and alarms. Report messages are relatively long, 100 characters or more. Alarm messages are relatively short, 20 to 30 characters. All messages will be composed of 8 unit characters organized in a 10 unit asynchronous format. The RCE shall be transparent to the code, message format, message length, and control protocol used by the RMMS.

3.4.2.2.1 Precedence - Polling messages and report messages shall have a precedence lower than that of RCE operation and control messages. If a polling or report message should be presented for transmission while an RCE message is in process, the polling or report message shall be delayed until the RCE message is completed and acknowledged. The RCE shall accomplish this delay by maintaining an OFF condition on the clear to send (CS) circuit in

the EIA-RS-232 interface until the channel is available, at which time the clear-to send circuit shall be returned to the ON state. If the data channel is required for an RCE operational or control message while a polling or report message is in process, the polling or report message shall be interrupted by switching the CS circuit to the OFF condition.

The RMS control protocol shall assure that the interrupted message is repeated at a later time.

Alarm messages being returned from the remote site are considered to be of high precedence, however, since the RCE operational and control messages are of short duration, they shall not be interrupted. The alarm message shall be delayed by holding the clear-to-send circuit in its OFF state until the RCE message is complete and acknowledged.

3.4.3 Traffic Data - Each RCE channel shall be designed to accommodate traffic volume representing the peak rate on the busiest channel at the busiest facility. The following message rates are representative and are provided as criteria for load and throughput analyses for firmware and software designs.

TABLE 12

RCE MESSAGE RATE

Type of Facility	Peak Minute Message Rate, Messages/Minute	Peak Hour Message Rate, Messages/Minute
En Route	12	4
Terminal	16	4
Tower	30	8
AFSS	2	1/2

These figures represent peak operational data message rates on single channels, in either direction. Where channels are bridged and controlled simultaneously on a common trunk, these figures represent the message rate for the bridged combination using a single data path between the Type I and Type II facilities.

3.5 Software Design Requirements - The RCE system software programs, shall be delivered with their associated hardware as part of each RCE modular configuration contractual delivery. The deliverables shall also include the complete documentation for all software programs in accordance with 3.5.3 and the contract schedule. The failure of any processor or software control shall not adversely affect the performance of any other processors. In the event of processor failure, all established voice and data transmission paths shall continue operation with no degradation of performance. Existing connections establishing paths for voice or data shall not be disturbed when start-up or failure recovery modes are initiated and executed under software program control. Standards for the development of programs shall be as required in FAA-STD-018, Computer Software Quality Program Requirements and in Part I Section B and C of the RCE Contract. It is not the intent of this specification to duplicate the requirements of those documents.

3.5.1 Real-Time Quality Control (RTQC) Capability - The software shall provide a real-time system performance capability for monitoring the strategic functions of each RCE channel. The RTQC capability shall supplement without duplicating the RMMS functions provided by in the IG module.

3.5.2 Software Implementation - Whenever used, the RCE software shall consist of separate routines to implement the various function requirements, so that individual routines may be modified or replaced without affecting other functional areas. The routines shall be exercised under control of an executive which shall assure that timing constraints are met. The resulting software, together with its associated hardware shall implement all the required RCE functions as allocated by the contractor's design and shall satisfy the following constraints.

3.5.2.1 Executive - The executive program shall provide supervisory control and direction of RCE software operation. This executive program shall include but not be limited to oversight of the following:

(a) Subprograms for the monitoring of input signals of inquiry, command, and confirmation of actions accomplished.

(b) Subprograms for processing and interpreting input signal sequences.

(c) Subprograms for the generation and routing of information and command signals.

It shall be possible to modify the executive program and associated subroutines so that the software is adjusted to perform at a specific location as required by local adaptation.

3.5.2.2 Program Structure - Programs shall be structured on the basis of simplicity and clarity using the following guidelines:

(a) Only the process construct (BEGIN-END), the decision construct (IF, IF-THEN-ELSE, CASE), and the looping construct (WHILE, REPEAT-UNTIL) shall be used.

(b) The allowed structured constructs may be nested or sequentially combined. The process construct may in fact be another separate subroutine or module (which must also be implemented using only the allowed structured constructs).

(c) Each module, procedure, routing, or source-code segment shall have a single-entry and single-exit structure.

(d) Program self-modification of instructions during execution is prohibited.

(e) Programs shall be designed and coded such that upon interrupt or termination, the values of the various parameters, indexes, and other local variables as of the last usage are recoverable.

3.5.2.3 Program Language - The contractor shall code the operational program and any additional operational support subprograms in such a manner as to enable the computer programming subsystem to operate in the most efficient manner possible in regard to computer processing time, memory element storage and other resources. The large majority of the coded instructions and data used shall be coded in the approved high order programming language. If, in order to meet the requirements of this specification, selected subprograms and data tables must be coded in assembly language, it shall be the contractor's responsibility to assess the relative cost/benefit factors involved. The contractor shall be responsible for identifying those subprograms selected, along with appropriate justification, to FAA for review and approval.

3.5.2.4 Compiler - A compiler shall be provided to permit making changes to any of the computer programs, using an off-line processor. This compiler shall be designed such that all software (operational and off-line) programs delivered as part of this procurement can be modified with minor revisions, major changes, or complete rework. The language used shall be a "high level" language to be specified by the contractor subject to review and comment by the Government prior to start of the contractor programming effort. The compiler shall include suitable utility programs for loading, modifying, dumping, editing, etc. as required for effective use in modifying the programs in support of future changes in FAA operating procedures. The use of these programs shall be incorporated in the programming documents to be delivered in accordance with paragraph 3.5.3 and the contract schedule.

3.5.2.5 Adaptation - The operational program shall be adjusted to perform as required at a specific installation site by means of adaptation. Adaptation shall be accomplished by loading the operational program into the operational configuration of a RCE followed by loading of the adaptation tables either from a card reader, magnetic disc or tape. The adaptation tables shall be produced by an adaptation assembler which shall be designed to operate as an off-line program in conjunction with off-line equipment in the RCE configuration. The input to the adaptation assembler shall be in the highest level symbolic language feasible. The contractor shall define the input symbolic language and the input format of control and data information subject to review and comment by the Government. This requirement shall be incorporated in the programming documents to be delivered in accordance with the contract schedule.

3.5.2.6 Maintenance Software - Maintenance software, in addition to the RTQC functions required under paragraph 3.5.1, shall be provided as required to meet the requirements of paragraph 3.2.1 and 3.6.

3.5.3 Software Documentation - Software documentation shall be provided which, through text and illustrations, will provide a complete understanding of the software structure and organization. It shall clearly and concisely describe each function and its implementation. The documentation shall be in sufficient detail to allow skilled programmers to add or delete functions and to modify functions in support of changes in operating procedures, changes in network organization, and future interfaces. Software documentation shall be as required in the following paragraphs and in accordance with Part I Section B and C of the contract schedule.

3.5.3.1 Program Design Instructions - Program design instructions shall consist of a description of program functions, subprograms. internal tables, parameters, and data formats. Program design shall be a systematic top-down method with a hierarchical structure of identifiable programs, subprograms, modules, procedures, and routines. The highest level of control logic resides at the top of the hierarchy; the computational or algorithmic functions reside at the lower levels. Programming levels shall be structured so that a lower level does not call on a higher level.

3.5.3.2 Executive Program - The description of the executive program shall include a discussion of the flow of program data and the means of controlling that flow. Specific information shall include:

(a) A description of the inputs and outputs and the processing by each subprogram.

(b) The source, purpose, and predicted rate of occurrence for all internal and external program interrupts.

(c) Assignment of priorities and permissible cycle times for each subprogram.

(d) Logic and timing functions.

3.5.3.3 Functional Program Elements - Descriptions of RCE system software programs shall include program purpose, special requirements, supporting documentation, and the information outlined below.

3.5.3.3.1 Program Capacities - The program descriptions shall include a summary of the program capacities including memory storage, core and timing values, processing time requirements for each subprogram, and the total number of displays, requests, and inputs and outputs available. The maximum number of displays, requests, and inputs and outputs that can be accommodated simultaneously shall also be defined.

3.5.3.3.2 Interfaces - The interfacing of the RCE software with the RMMS system shall be fully described in the interface control document (ICD) required by 3.4.2.1.2.11. The descriptions shall include data quantity, frequency, rate, format, and content. Where interfacing is extensive, the description shall incorporate a functional block diagram or equivalent to supplement the explanatory text.

3.5.3.3.3 Program Inputs - All inputs to the program shall be identified by type, source, units of measure, limits, precision, and frequency of information arrival. A tabular presentation may be used.

3.5.3.3.4 Processing Of Data - The purpose and a description of each mathematical operation shall be provided. The narrative shall identify accuracies required, sequence and timing of events, and relevant restrictions or limitations. Derived equations shall be shown with appropriate mathematical and control signals adequately defined.

3.5.3.3.5 Data Base Descriptions - All items contained in the computer program data base, site configuration and adaptation data shall be described to include, as appropriate, a descriptive title, most significant bit, number of bits, coding type, scaling factor, and item value. Each file and each table within the file shall be listed. The function of each shall be described, and the location and required amount of storage space shall be provided. Constants, their values, and their descriptions shall be listed. The availability of certain tabulated information is a requirement for performing software functions. Such information shall be tabulated and stored in the systems software where it shall be accessible for use in the appropriate routines. These tabulations shall include but need not be limited to the following:

(a) Data identification characteristics associated with each operating position main/standby selection module.

(b) Data identification characteristics associated with each radio position electronic equipment frequency channel input.

(c) Data identification characteristics for all air-to-ground equipment used in connection with the RCE.

(d) Reconfiguration information on the preferred regrouping of the data and voice signals associated with each RCE frequency inlet and outlet by trunk assignment for a variety of trunk failures.

3.5.3.3.6 Program Outputs - All outputs (internal and external) shall be identified by type, units of measure, scaling, precision, format, destination, and frequency of transmission. A tabular presentation may be used.

3.5.3.4 Program Logic Instructions - Program logic shall be provided as flow charts and program listings showing the step-by-step instructions within the program. Where necessary,

appropriate text shall be provided to supplement this data. Listings may be bound separately where length of routines and physical size of printouts advocates this approach.

3.5.3.4.1 Flow Charts - Flow charts shall be prepared in conformity with ANSI Standard X3.5, Flowchart Symbols and Their Usage in Information Processing.

3.5.3.4.2 Listings - Listings related to the computer program shall be provided as outlined in the following subparagraphs.

3.5.3.4.2.1 Program Listings - The listing of a compiled program shall include source language statements and comments with resulting object machine instructions interspersed appropriately (together with actual or equivalent assembler statements, if available). Relative location of instructions and operands shall be exhibited together with statement labels and identification numbers. All descriptions of reference procedures, routines, and data shall be included in conjunction with this listing and arranged for convenient access.

3.5.3.4.2.2. Cross-Reference Listings - A cross-reference listing shall be provided relating each data name to the location of every other statement referring to it, and relating each routine to the location of every other routine calling upon it. The list shall be exhibited as a sequential table in alphanumeric order.

3.5.3.4.3 Load Maps - The contractor shall describe the format, method, and location in which the various components and portions thereof are loaded into the software memory. This mapping shall include delineating all of the portions of the program that are to be concurrently resident in the device in question and the location and size of each portion of the program. If the system has more than one defined configuration or mode of operation for the software, the contractor shall describe this information for each configuration or mode.

3.5.3.5 Operator's Instructions - The contractor shall provide operator's instructions that fully describe the uses of the program, the hardware requirements including input, output, and storage instructions, the requirements and control of data tape or card decks, and operator communication with the computer.

3.5.3.6 User's Manual - A user's manual shall be provided and shall contain the program language, calls and control information, references, input and output requirements, storage requirements, and any restrictions.

3.6 Maintenance Requirements - RCE modules and configurations at control and radio site facilities shall provide the capability of being maintained by the level of personnel required as specified in 3.7 including normal unattended operation of remote sites. Visits to remote sites for corrective or preventive maintenance actions shall be in accordance with the 90 day criterion also specified in 3.7. Radio transmitters and receivers and site facility parameters will be under the maintenance control of the MPS as defined in NAS-MD-790 with the RMS data exchange for this maintenance function handled through RCE interfaces with remote site and control facility interfaces with the RMS and MPS. The RCE maintenance panels therefore shall have the capability of forwarding alarm and status information to the MPS processor for this purpose in the message format required by NAS-MD-790. The capability shall also be provided for the MPS to address the IE, IIE or IIF modules via these interfaces for the purpose of RCE fault data and adaptation data retrieval and commanding selective diagnostic or configuration routines to enable local and remote control by the MPS of designated maintenance test configurations and procedures. The contractor shall provide the criteria for the selection of appropriate test and diagnostic routines which can be remotely controlled by the MPS and identify those diagnostics or test and maintenance procedures which must be handled at the maintenance panels. The government shall make the selection and provide approval for the implementation of selectable options subsequent to the maintainability design review required in 3.7 and as required by the contract schedule.

3.6.1 Maintenance Functions - The maintenance control functions shall provide the capability for local and remote module and configuration testing, for easy substitution of failed modules or module plug-in components, loop back testing, injection of test signals and other functions required to detect, isolate and restore failed units to an operational condition within the maximum MTTR values specified in Table 14. Maintenance actions at both the control facility and remote sites shall be centered at the maintenance panels which shall be equipped with appropriate indicators, entry and read-out devices as may be required by the contractor's design. To the maximum extent feasible, test equipment shall be integrated with and built into the maintenance panel. The maintenance panel in addition shall provide a voice order wire circuit capability, including handsets and signaling, to provide maintenance personnel at the control facility and each radio site with voice communications capability. The trunks selected for order wire purposes shall be under control of the control facility's maintenance panel and as determined by site adaptation data.

The maintenance panel shall include an RS-232 interface for connection of a portable terminal to operate in asynchronous mode at 2400 or 9600 bauds. This connectivity shall include the means for:

1. A two way exchange of messages with the MPS via the 300 baud data channel associated with one of the operating voice channels.

2. Examining or modifying the adaptation data in an operating air/ground voice channel.

3. Initiating and monitoring test and maintenance functions.

Controls shall be provided at the maintenance panel to designate the channel and the function to be performed. When functions 2 or 3, above, are selected at a remote (Type I) facility, a suitable indication shall be provided at the maintenance panel of the corresponding Type II facility, and further access at the Type I facility shall be inhibited until an uninhibit signal is received from the Type II facility. An uninhibit visual indicator shall be provided at the site maintenance panel. A summary of alarm information normally displayed at the remote site maintenance panel shall also be transmitted for display at the control facility's maintenance panel and the MPS. The method of handling this alarm information exchange shall be via the maintenance panel interface with the site IB2, IIB2, IE, IIE or IIF modules in accordance with 3.3, 3.4, and 3.5 and the RMS/MPS interface at type II facilities required by these paragraphs.

3.6.2 Maintenance Hardware - In addition to the maintenance panel requirements covered in 3.6.1, maintenance aids such as patch panels, test and measuring equipment, distribution frames and module test points shall be provided to facilitate maintenance actions and service restoration of RCE. The capability to rapidly change local or remote frequency channel assignments, trunk assignments, and module configurations by manual actions or by commands from a centralized position such as the control facility's maintenance panel, shall be provided as maintenance hardware. Software and firmware required to implement this capability shall be provided in accordance with 3.5 and 3.6.3.

3.6.3 Maintenance Software/Firmware - Maintenance software and firmware shall be organized to handle automated fault detection, isolation and reporting maintenance functions including restoral actions at both the control and radio site configurations. Corrective and preventive maintenance diagnostics shall be provided as required to meet the MTTR requirements of Table 14. Software and firmware organization and storage criteria including site configuration and adaptation data organization and criteria shall be as specified in 3.5.

3.6.4 Test Equipment - The contractor shall recommend, as required by the contract schedule, standard and special test equipment that may be required, in addition to built in test capability, to support factory test bed testing and maintenance and equipment to support field maintenance of the RCE. The recommendations for the test equipment shall be based on consideration of the maintainability requirements of this specification and for the test and repair of replaceable modules at designated work centers.

3.6.4.1 Standard Test Equipment - An itemized list of any required standard commercially available test equipment shall be provided by the contractor. The list shall indicate the make and model and describe the application and functional characteristics of each item. The government may provide this equipment as GFE, where available, or require the contractor to purchase selected items from this list in accordance with the contract schedule.

3.6.4.2 Special Test Equipment - Special test equipment is defined as test equipment required for maintenance of the RCE and not available as a standard catalog item from any manufacturer including the RCE contractor. Special test equipment shall be provided by the contractor as required, to augment standard or built in test equipment.

3.6.4.3 Maintenance Tools - The contractor shall supply a complete list of all tools, standard and special, required for maintenance and repair of the RCE. Special tools shall be provided with the equipment as part of the basic contract. Standard tools shall be adequately described for easy identification and procurement by the Government. Special tools are defined as tools required for maintenance and repair of the RCE and are not available as standard catalog items from any manufacturer including the contractor.

3.6.5 Service Life - RCE equipment shall be designed and constructed to have a service life of at least 20 years with the maintenance and maintainability procedures established in response to the maintainability, reliability and environmental conditions required by this specification. During its service life the RCE shall be capable of continuous operation 24 hours a day, 7 days per week and 365 days per year. Spare parts to be provided for the required continuous operation over this service life shall be in accordance with the contract schedule.

3.6.6 Environmental Requirements - The environmental conditions under which the RCE shall perform in accordance with the requirements of this specification are as follows:

(a)	Control Facility	+10 degrees C to +50 degrees C with relative humidity between 10% to 80% and altitude above sea level between 0 and 10,000 feet
(b)	Remote Site or Consolidated Site	-29 degrees C to +50 degrees C with humidity between 5% to 90% and altitude above sea level between 0 and 15,000 feet.

3.7 Reliability and Maintainability Requirements

3.7.1 General - RCE modules and module configurations at control and radio site facilities shall have inherent reliability and maintainability characteristics that shall permit unattended operation of radio sites and require minimum maintenance personnel at control facilities. The reliability of each RCE module shall be such that any configuration of modules, as required by the contract schedule, shall meet the MTBF requirements of 3.7.2. Maintainability design shall be consistent with the maintenance requirements specified in 3.6 and shall meet the MTTR requirements of 3.7.2.1. The RCE reliability and maintainability designs shall provide the capability to sustain full operational capability at remote sites for at least 90 days without the need of maintenance personnel visits for either corrective or preventive maintenance actions during this period. The MTTR values shall be such that cumulative fault correction or preventive maintenance actions shall be completed in less than 8 hours during a scheduled site visit for the largest site configuration indicated in Table 2. The control facility configuration represented by the largest facility indicated in Table 2 shall require no more than one (1) on-site skilled technician for one eight hour period of a 24 hour day.

3.7.1.1 Reliability, Maintainability Definitions - The reliability and maintainability definitions applicable to this specification shall be in accordance with the MIL-STD-721 with the additions or modifications described below.

(a) Reliability - The probability that a unit, element, or function will not fail under specified operational, stress and environmental conditions during a specified time period. This includes hardware, and software elements. Reliability predictions and demonstrations shall be in accordance with 3.7.3, 3.7.5 and 4.0, Quality Assurance.

b. Maintainability - A measure of the capability to detect, isolate, restore and repair failures or fault in an operational configuration of hardware, firmware and software in a cost effective manner. Maintainability encompasses measures applicable to certification factors. A maintainability analysis of a system design or module configuration is required to establish and validate mean-time-restore/repair (MTTR) values.

(c) Functional Failures - The loss of a required function or the degradation of a function which results in unacceptable performance.

(d) Hardware/Software Failure - A device, component, module, assembly, etc., that does not function within its specified limits. Such failures may or may not cause a functional failure but will require maintenance actions to restore the faulty unit to an operational state.

(e) Single Thread - A series or series/parallel configuration of modules or elements required to perform a specified function. All elements in a single thread reliability model, whether dedicated to the function or shared common elements which are utilized in more than one function, shall be assigned a failure rate which is applicable to the single thread function model. Where redundant elements are required to meet the numerical requirements of 3.7.2 they shall be included in the single thread model. The single thread reliability/availability is solved by math modeling in accordance with MIL-STD-785.

(f) Mean-Time-To-Restore (MTTR) - The time required to detect, isolate, report, replace and confirm operational performance of a failed unit, element, module, assembly, etc. Bench repair time of the failed unit is not included. The validation of MTTR values shall be in accordance with the requirements of 3.7.4., and 4.0, Quality Assurance.

(g) Functional Availability - The probability that a function is in a fully compliant operational state during a specified time period. It is normally defined as:

$$\text{Availability (A)} = \frac{\text{UP TIME}}{\text{TOTAL TIME}}$$

or

$$\text{Availability} = \frac{\text{UP TIME}}{\text{UP TIME \& DOWNTIME}}$$

If the UPTIME is the Mean Time Between Failure (MTBF) and the DOWNTIME is the Mean Time To Restore (MTTR) then

$$\text{Availability} = \frac{\text{MTBF}}{\text{MTBF + MTTR}}$$

(h) Failure Rate - The expected number of failures that will occur during a specified period of time. The symbol λ is normally used to denote this value for a nominal time period of 10xE6 hours. Values of λ for typical electronic devices are obtained from government sources such as MIL-HDBK-217, Government-Industry Data Exchange Program (GIDEP), Tri-Service Failure Rate Data (FARADA).

(i) Mean-Time-Between-Failures - MTBF - Mean Time Between Hardware Failures is based on the failure rate (λ) values. If the failure rate is N x 10xE-6 then the MTBF is the reciprocal of this value or $\frac{10xE6}{N}$.

(j) Commercial Equipment - An item procured by the contractor from a manufacturer or supplier (including the contractor) and electrically incorporated into the end item, module or article exactly as procured. An item which is procured or fabricated in accordance with the contractor's drawing or specifications may or may not be considered a commercial item. Items not classified as commercial equipment will be considered to be new design items.

(k) Module - A preassembled, organized group of parts complete in itself which is an element that can be removed and/or replaced as a single entity.

(l) Common Equipment - Hardware/firmware or hardware/software whose use in some form is required by different functional configurations.

(m) Dedicated Equipment - Hardware/firmware or hardware/software whose application is restricted solely to a single functional configuration.

(n) Service Life - The intended useful life of the system or functional configuration. Short life items, where utilized, are replaced or replenished as required on a scheduled basis under a preventive maintenance plan. Preventive maintenance DOWNTIME must be included in reliability/availability modeling and calculations per item (g) above.

3.7.2 Reliability Numerics - Each RCE module shall have a combined total failure rate (λTM) such that when integrated into a specific functional configuration containing n modules the

$$\text{Configuration MTBF} = \left[\sum_{i=1}^{n} \lambda TMi \right]^{-1}$$

where λTM is the combined total failure rate of each Type I and Type II module in the configuration. For the purpose of reliability modeling, trunk facilities between a control facility and associated radio sites shall be considered to have an availability of one (1). Likewise, software and firmware shall also be considered as having an availability of one (1) for reliability modeling purposes. However, data interchange failures, not related to trunk failures or software, shall be considered as originating in a hardware failure and would therefore be covered by the λTM value. Error rate performance criteria which relates error rates and message re-transmission thresholds to trunk transmission sensor thresholds and failure conditions shall be as specified in 3.3, 3.4, and 3.10. Software and firmware reliability shall be validated by testing in accordance with Section 4.

The minimum MTBF required shall be as specified in Table 13. The contractor shall have the have the option to use a multiple channel reliability testing configuration to reduce the overall testing time required to demonstrate the reliability requirements. In the event that this option is chosen, the contractor shall be required to demonstrate by analysis the MTBF requirements for each configuration specified in Table 13. Any proposed multiple channel configuration shall be subject to government approval and concurrence.

TABLE 13
MINIMUM RCE MTBF REQUIREMENTS (Note)

CONFIGURATION	TYPE I FACILITY MTBF (HOURS)	TYPE II FACILITY MTBF (HOURS)	REMARKS
FIGURE 7	37,000	24,000	Basic U/V Channel Split or Selective Mode
FIGURE 10	--	3,000	6 IIB2 MODULES on a Single Trunk
FIGURE 9	4,000	--	6 IB2 Modules on a Single Trunk

NOTE - Excludes Radio Equipment, Position Equipment and other Non-RCE Interfacing Systems or Equipment.

3.7.2.1 Mean-Time-To Restore (MTTR) Numerics - Each RCE module shall have an assigned MTTR of TMi which shall be derived by the contractor based on experience factors or the prediction techniques covered by MIL-HDBK-472 and validated through maintainability demonstrations as required by 3.7.4.1.3, 3.7.4.2 and Section 4. The configuration MTTR of modules shall satisfy the following expression:

$$\text{Configuration MTTR} = \frac{\sum_{i=1}^{n} (\lambda TMi)\ (TMi)}{\sum_{i=1}^{n} \lambda TMi}$$

where TM is the time to restore a failed module in accordance with definition (f) in 3.7.1.1. The maximum MTTRs associated with the three configurations indicated in Table 13 shall be in accordance with Table 14.

TABLE 14
MAXIMUM RCE MTTR REQUIREMENTS (NOTE)

CONFIGURATION	TYPE I FACILITY MTTR (HOURS)	TYPE II FACILITY MTTR (HOURS)
FIGURE 7	0.5	0.5
FIGURE 10	--	1.0
FIGURE 9	0.75	--

Note: MTTR values do not include travel time to a facility and assumes spare modules are available at the site location. One skilled technician shall be assumed for each facility.

3.7.3 Reliability Program Plan - The contractor shall prepare a reliability program plan, in accordance with MIL-STD-785. The reliability program plan shall be submitted in accordance with the contract schedule.

3.7.3.1 Reliability Management - The contractor shall have one clearly identified organization element which will be responsible for ensuring the effective execution of the reliability program. The individual designated as head of this reliability management organization shall have the necessary authority, resources and access to higher management to enable him/her to implement and enforce the requirements specified herein.

3.7.3.2 Reliability Program Tasks - The reliability program shall include all the task elements of Section 5 of MIL-STD-785 with the following tasks modified as indicated in the paragraphs that follow.

3.7.3.2.1 Design Reviews - The reliability program shall include design review of the system; its functions, hardware, software and performance. These reviews shall be critical audits of the design to analytically demonstrate and assure compliance to the requirements stipulated herein. As a minimum, two design reviews shall be held.

They are a preliminary design review and a critical (prior to design release to manufacturing) design review. The Government will participate in all reviews. The Government shall be notified in accordance with the contract schedule prior to the occurrence of any review. The contractor shall submit complete design data packages prior to the scheduled date of each design review in accordance with the contract schedule. Items to be covered as a minimum in the preliminary and critical reviews are the tasks that follow.

3.7.3.2.2 Reliability Apportionment - The reliability requirements shall be apportioned to each of the constituent components of the system. These apportionments shall be based upon the functional requirements and shall show how the contractor intends to comply with the requirements stipulated herein. The apportionments shall be submitted in accordance with the contract schedule. Any changes in the apportionments shall be submitted for the Government's review. The approval or disapproval of any apportionment does not release the contractor from meeting the reliability requirements specified herein.

3.7.3.2.3 Reliability Modeling - The RCE shall be reliability modeled. The models shall include single thread models and subsystem models for each of the configurations shown in Table 13. The models generated shall accurately reflect the relationship between each of the functional requirements and the equipment complement: Critical paths and elements relative to any of the defined functions shall be highlighted. The single thread models and subsystem models shall be used to generate the functional reliability predictions. The models must then show in sufficient detail the relationship between the functional requirements as delineated herein and the hardware elements required by the particular design proposed to accomplish these requirements.

3.7.3.2.4 Failure Mode, Effects and Criticality Analyses - A Failure Mode, Effects and Criticality Analysis (FMECA), based on all functional requirements, shall be initiated as an integral part of the design process. A preliminary FMECA shall be submitted in accordance with the contract schedule. Reviews of the models and FMECAs will continue through preliminary design and all changes and revisions shall be available for final review during the critical design review. The FMECA shall be conducted down to the level of repair in normal maintenance for the equipment contemplated (e.g., printed circuit card, module, component, power supply, etc.). For each replaceable element, the applicable modes of failure shall be injected into the analyses to ascertain areas of criticality based upon failures and their levels of expectancy (i.e., failure rates). The results of the FMECA shall be used to evaluate the model, determine the areas of criticality and if needed determine appropriate design

changes. The analysis shall highlight single point failures. Particular attention shall be paid to redundant equipment applications to ensure that the redundancy is not invalidated by obscure circuit effects or sneak circuit paths. As a minimum, the FMECA shall contain the following information for each potential failure mode:

(a) Component, item, etc., identification
(b) Failure mode
(c) Cause
(d) Symptoms or local effects
(e) Compensating provisions
(f) Effect on system function/operations
(g) Mode failure rate
(h) Comments and recommended resolution of problem area.

3.7.3.2.5 Reliability Analysis and Prediction - Reliability predictions shall be made based upon each of the elements of the RMA model. The analyses shall be based upon an ambient input air temperature +25 degrees C. Part local temperatures for the final analysis shall be based on thermal measurements, as required by paragraph 3.7.3.2.5.1. Where applicable the analysis shall utilize MIL-HDBK-217 or RADC Nonelectronic Notebook, TR-74-268, for prediction purposes. For parts not specifically covered by MIL-HDBK-217 or RADC Nonelectronic Notebook TR-74-268, predictions shall be submitted based upon the input environmental conditions stipulated and a justified rationale for the failure rates used to arrive at the prediction. The failure rates used and their justification are subject to Government review and approval. The contractor shall also submit an overall failure rate for his proposed system. This prediction shall use the same failure rate ground rules as applied to the reliability prediction, but it shall include the total failure rates of all equipments and hardware included in the system and thus provide a measure of the maintenance workload necessary to maintain the system.

3.7.3.2.5.1 Thermal Design Analysis - The contractor shall determine the thermal profile in any packaging configuration he plans to use. His design shall provide the means necessary to assure that all parts, components, and equipments, as they are used, are compatible with the required environmental conditions invoked by this specification. The contractor shall analyze his packing arrangement when determining the thermal profile. Where it is determined that hot spots and/or localized areas of elevated temperature exist, these shall be instrumented as necessary and design changes shall be implemented to bring these temperatures within the required limits of this specification.

A preliminary thermal analysis shall be submitted as part of the preliminary reliability analysis. The final thermal analysis and verification shall be submitted as part of the final reliability analysis data package.

3.7.3.2.6 Part Applications - The contractor shall ensure proper application of all parts. In new designs and for modified commercial equipment, the part applications for these designs or modifications shall comply with the requirements of FAA-G-2100. Part applications for commercial equipment shall be within the parts and materials ratings under all specified conditions of use. Non-standard parts desired for use in these designs or modifications must be approved by the Government prior to their use.

3.7.3.2.7 Commercial Equipment Control - Where commercial equipments or items are considered for use in the RCE, the procurement documentation the contractor intends to use shall be submitted to the Government for review and consent prior to subcontract placement. This documentation shall contain sufficient performance requirements for proper part selection and delineation by the vendor. The procurement documentation shall require the vendor to provide all data necessary for logistic support. This data should consist of such items as data sheets, parts lists, test procedures and maintenance routines. Requirements for information on parts should include identification by reference to industry standard part numbers, and other information such as special screening. The product assurance technology that is employed by the contractor to ensure product integrity shall establish MTBF and MTTR levels which are consistent with the requirements of this specification.

3.7.3.2.8 Failure Reporting, Analysis and Corrective Action - The contractor shall establish a closed loop system for reporting all failures. A closed loop system is one in which the Assurance Technologies Disciplines (usually R&M and QC) receive individual failure reports and assure that repair, replacement and corrective action is carried forth. A focal point is required to assure that all failures are resolved, from identification of the incident to close out. The level of equipment (e.g., circuit board, module, etc.) within the manufactured, subcontracted and commercial equipment for which the contractor intends to maintain failure records shall be delineated. As a minimum, failures occurring from the time design is released to manufacturing shall be reported with analysis and results. The reporting shall commence with the first application of power and continue through completion of all testing. The failure report shall include all pertinent conditions concerning the failure occurrence, in sufficient detail to permit an adequate and conclusive failure analysis. It shall include, as a minimum, the following:

(a) Failure identification with date and time

(b) Equipment involved, level of failure, i.e., component, diagnosis time, and repair and checkout times.

(c) Environment condition, type of operation.

The contractor shall analyze each failure to determine its cause (i.e., manufacturing defect, misapplication of part, test error, secondary failure, etc.). Each failure analysis shall include any development of corrective action that may be necessary to prevent failure occurrence. The corrective action process in the closed loop system shall assure that all impacted equipments, whether in process or in the field, receive the necessary corrective action to update that particular equipment to meet the new design requirement necessary to prevent failure duplication. For failures occurring during the reliability demonstration test, the analysis shall also indicate relevance or justification for nonrelevancy. Failure data reports, including analysis results, shall be maintained by the contractor and shall be made available to the Government on request. The Government representative shall be notified of any failure within one working day of the occurrence.

3.7.3.2.8.1 Failure Summary Reports - Monthly summaries shall be submitted during all phases of manufacture and test commencing with the first articles and all subsequent modules. They shall include identification of each failure analysis report, the equipment failure mode and cause of failure, corrective action recommended, status of corrective action implementation, and relevancy (for reliability demonstration test failure). The summaries shall be so reported that trends, patterns, etc., can be discerned.

3.7.3.2.8.2 Subcontractor and Commercial Equipment Failure Reporting - The contractor shall establish a closed loop system for reporting of all failures in deliverable subcontractor and commercial equipment, to commence with the first application of power. Each failure report shall be traceable to the specific equipment in which the failure occurred. All of the requirements of paragraphs 3.7.3.2.8 and 3.7.3.2.8.1 shall apply.

3.7.3.2.9 Reliability Demonstration - Demonstration of achievement of reliability requirements shall be accomplished by means of the reliability demonstration tests as described in Section 4.0, Quality Assurance.

3.7.4 Maintainability Program Plan - The contractor shall prepare a maintainability program plan in accordance with MIL-STD-470 in its entirety, except as modified by this specification. The program plan shall include a milestone chart including program review points, and design reviews, analyses and predictions, and maintainability demonstration. The maintainability program plan shall be submitted in accordance with the contract schedule.

3.7.4.1 Maintainability Management - The contractor shall have one clearly identified organizational element which will be responsible for planning and managing the maintainability program. The individual designated as head of this maintainability organization shall have the necessary authority and resources and report at a level having full contract responsibility to implement and enforce the maintainability program. The maintainability organization may be part of the reliability organization as defined in Paragraph 3.7.3.1.

3.7.4.1.1 Maintainability Apportionment - The reliability requirements shall be allocated to establish detailed equipment maintainability requirements. These allocations should be in consonance with the reliability requirements imposed upon the various subsystems and functions. These maintainability equipment apportionments shall become the detailed equipment requirements; however, the contractor shall retain the necessary flexibility required to reallocate or to trade-off available parameters to meet system requirements. The allocation shall be submitted in accordance with the contract schedule.

3.7.4.1.2 Maintainability Analysis and Predictions - Maintainability analyses and predictions shall be performed for each element of the RMA model. Maintainability analysis shall be in accordance with MIL-STD-470. Predictions of mean corrective maintenance shall be performed in accordance with Procedure II, Part B, Corrective Maintenance, MIL-HDBK-472. Preventive maintenance requirements shall be determined and the schedule, procedure, and the estimated duration of each preventive maintenance task shall be reported as part of the maintainability prediction results. When required, those portions of the system down for preventive maintenance shall be capable of being brought into an on-line operational state within 10 minutes.

Preliminary analysis and predictions results shall be submitted in the RMA Analysis and Prediction Report and updated thereafter as design or system changes are required and additional data are obtained.

Analyses and predictions shall be reviewed as part of each design review. Final submission shall be in accordance with the contract schedule.

3.7.4.2 Maintainability Demonstration - RCE shall meet the specified numerical requirements over the full range of environmental conditions specified in Section 3.8. A maintainability demonstration in the factory test bed shall be conducted in accordance with Section 4.

3.8 Physical Characteristics - In complying with the requirements of this specification, the contractor shall design, construct, and deliver standardized cabinets, racks and modules, consistent with the requirements of 3.3. The contractor shall employ standard parts, materials and processes. Solid-state circuits shall be utilized to the maximum extent possible. Use of vacuum tubes in the RCE design is prohibited. All EPROM's shall be installed on their respective circuit cards in sockets (3.8.1.8 Socket Requirements). Redundant elements, where provided, shall be replaceable without interrupting service. The RCE configuration at any facility shall be electrically and mechanically expandable by the addition of modules, and, where required and permitted, by the addition of cabinets/racks, up to the maximum size for that facility type (i.e., up to 113 channels for Type II control facilities; up to 12 channels for Type I remote facilities). This expansion shall be in modular increments and shall not require replacing equipment or disruption of service to the existing operational system. The overall design of the RCE shall meet all the requirements of this specification and the referenced sections and paragraphs of FAA-G-2100 contained herein.

3.8.1 Electrical Design - The RCE shall be designed to operate from primary AC power sources as specification in 3.9. The RCE shall be designed to operate over the range of service conditions specified in 3.8.1.1 and in accordance with FAA-G-2100, paragraph 3.3.4.1 and the non-operational conditions specified in 3.8.1.2 below.

3.8.1.1 Ambient Conditions - The RCE shall be designed to operate over the range of ambient conditions specified below or, if not specified, in accordance with FAA-G-2100, Table 2.

		Temp.	Altitude (ft. above sea level)
(a) Type I Facility	-	-29 degrees C to +50 degrees C	0 to 15,000
(b) Type II Facility	-	Environment I	

3.8.1.2 Non-Operating Conditions - Non-operating conditions for the RCE are those conditions affecting equipment in storage, in shipment,

in the process of being installed on site and installed on site but non-operating. The RCE equipment shall meet the requirements of FAA-G-2100 Table 2 (a), (b), and (c) for these conditions.

3.8.1.3 Module Removal and Insertion Damage - All equipment shall be designed to enable the removal and insertion of modules and printed circuit boards (PCB) in an operating configuration without causing or inducing damage or transients to any equipment external to the module or PCB. This provision applies even if the module or PCB is inserted into the wrong module or PCB position.

(a) Induced Transients - A means shall be provided to enable the removal or insertion of any module or PCB in an operating configuration without generating any electronic disturbance.

(b) Expansion - A means shall be provided to enable the addition of modules or PCBs to spaces previously assigned for expansion without causing any damage or inducing any transient condition as specified above.

(c) Circuit Isolation - All circuits shall be designed so that no damage will occur when the equipment is operated with the operating controls and maintenance adjustments set to any possible configuration of settings. No failures shall occur in an operating configuration due to activation of any operational controls.

(d) Maintenance Actions - With the equipment in an operating configuration, removing or inserting a single printed circuit board within a module, due to maintenance actions to repair any equipment failure, shall only affect the channel under maintenance, and shall not affect the function or performance of any other channel.

3.8.1.4 Printed Circuit Boards - PCBs shall be in accordance with FAA-G-2100, paragraph 3.5.23. PCBs which deviate in any manner from the FAA-G-2100 requirements shall be classified as non-standard parts and must follow the required non-standard part approval procedures provided in FAA-G-2100, Appendix I.

3.8.1.5 Parts and Materials - Parts and materials shall be selected in accordance with FAA-G-2100, Sections 3.5 and 3.6. Microelectronic devices utilized shall meet the requirements of 3.5.20 of FAA-G-2100. Microprocessor utilization shall be subject to Government approval as specified in 3.3.1.8.1 of this specification and the contract schedule.

3.8.1.5.1 Windows - Equipment window applications shall be in accordance with FAA-G-2100, paragraph 3.3.3.6.

3.8.1.5.2 Ferrous Materials - Ferrous materials shall be in accordance with FAA-G-2100, paragraph 3.6.4. Ferrous materials shall not be used for withdrawal slides without a non-standard part approval from the FAA. Ferrous materials used in the construction of rack panels shall be in accordance with FAA-G-2100, paragraph 3.3.3.3b.

3.8.1.5.3 Identification, Marking, and Labels - Identification, marking, and labels shall be in accordance with FAA-G-2100, Section 3.9.

3.8.1.6 Loss of Voltage - In multiple voltage modules or any other contractor provided equipment, the loss or variance of any voltage, including loss of voltage caused by activation of circuit protector devices shall not cause or induce any damage to any component in the RCE or other interfacing equipment.

3.8.1.7 Solderless Wrapped Electrical Connections - Solderless wrapped electrical connections shall be in accordance with FAA-G-2100, paragraph 3.3.2.8.

3.8.1.8 Socket Requirements - Sockets used to meet the requirements of paragraph 3.8 shall meet the requirements of military specification MIL-S-83734E.

3.8.2 Mechanical Design and Construction - The RCE shall be mechanically designed and constructed to permit ready access to all modules, PCBs, units, assemblies, etc. The construction shall be such that all parts, test points, terminals, and wiring are accessible for circuit checking, adjustment, maintenance and repair without requiring the partial or complete removal of any adjacent module or unit.

3.8.2.1 Equipment Room Mechanical Layout - The basic RCE design and mechanical layout shall include accommodation of all RCE configurations and capacities. The largest Type II facility configuration, including aisle space shall not occupy more than 700 square feet. The equipment room mechanical layout of the RCE cabinets and distribution frames shall be adaptable to emplacement in a 20 x 40 foot area. Aisle space between equipment rows shall be 4 feet as a minimum for cabinet front access and 2.5 feet as a minimum for cabinet rear access. An area approximately 10 x 15 feet will be provided adjacent to the RCE for clear work space. All RCE equipment at a maximum sized Type I facility (excluding power equipment and batteries) shall be contained in not more than two (2) racks or cabinets. The battery and power assembly racks and floor space requirements shall be as determined by the contractor's design but subject to review and approval by the Government at the preliminary design review. However, the maximum floor space required by this equipment shall not exceed 100 square feet. The actual equipment room layout shall be configured in accordance with the Site Installation and Transition Plan (3.12.3).

3.8.2.2 Cabinet and Enclosure Construction - The maintenance panels, located at control or Type I facilities, shall include indicator lamps, built-in test equipment, and provisions for entry and readout devices. At Type II facilities the maintenance panel shall be located in the RCE cabinet or enclosure equipment area. The layout of the panels is left to the contractor subject to review and approval by the Government. The Government shall approve or reject the proposed panel layouts at the first design review (see paragraph 3.7.3.2.1). The maintenance panel shall be installed in the RCE cabinets or enclosures at Type I facilities. The RCE cabinets and enclosures shall be designed for an average weight distribution or floor loading not to exceed 125 lb/sq. foot. The structural strength and rigidity of the cabinets and enclosures shall be such that normal handling in loading, shipping, unloading, and setting into position for installation and later reloading, shipping, unloading, and setting into position in another facility will not result in any permanent set or deformation that would impair or interfere with the removal or addition of equipment or modules and the ease of maintenance. Removal of equipment or modules or physical interchanging of equipment or modules shall not cause any permanent set or deformation to the cabinets or enclosures. Panels and chassis shall be adequately braced and of sufficiently small size and weight to permit removal and replacement by one person. The structural strength and rigidity of all cabinets shall be independent of any strength or rigidity provided by access doors or mounted or attached equipments. Louvered exhaust vents shall be designed such that foreign objects cannot enter the cabinet through the louvers. Where equipment cabinet or enclosure lifting devices (hooks, rings, etc.) are installed for convenience during handling, such devices shall be replaced, after installation, with suitable cups after removal of the lifting device. Storage shall be provided in the cabinet or enclosure for the lifting device for later use in removing, relocating, and reinstalling the cabinet or enclosure. All equipment cabinets and enclosures, including those at remote locations, shall be designed to fasten to the floor. All equipment racks and enclosures shall meet the requirements of FAA-G-2100, paragraph 3.3.3.3 as applicable. Each RCE site configuration shall be readily expandable to accommodate the maximum capacity specified for that type facility. This expansion shall be accomplished as follows:

(a) All partially filled or utilized RCE cabinets or enclosures shall be capable of being completely filled or utilized without modification or additional wiring of any kind including external connections. Full capacity of cabinet or enclosure electronics shall be achieved simply by addition of plug-in PCBs and modules.

(b) Cabinets or enclosures required solely to meet future expansion requirements at any type facility shall be provided as required by the contract schedule.

(c) Floor space shall be provided and left open in each facility equipment room layout (paragraph 3.8.2.1) for the cabinets or enclosures in (b) above, so that expansion in the future can be achieved by installation of the complete cabinets, or enclosures. These additional cabinets or enclosures shall be installed without requiring the shutdown or interruption of the existing operational system.

(d) A single channel enclosure, to include a single channel DC power system, shall be provided for facilities at which there are up to two frequencies, and no expansion is anticipated. This enclosure shall be capable of being installed in an existing FAA equipment rack containing main and standby radios and associated equipment for two complete frequencies. This enclosure shall contain standard RCE modules in accordance with the module requirements specified, and shall meet the performance requirements as specified in paragraph 3.10.

3.8.2.2.1 Electromagnetic Interference (EMI) Control - All RCE cabinets, and enclosures shall be designed and fabricated to satisfy the EMI requirements listed in paragraph 4.2 of this specification.

3.8.2.3 Equipment Ventilation - The RCE shall be designed to operate in a room environment without the need for heating or forced-air cooling or ventilation. Any space coolers or heaters installed in Type I facilities shall be for maintenance personnel comfort only. Any ventilation equipment installed at Type I facilities contained within the RCE equipment racks or cabinets shall be powered from the AC primary power. The RCE, however, shall be capable of operating without AC power for a minimum period of 4 hours.

3.8.2.4 Distribution Frames - Distribution frames shall be provided to terminate trunk circuits and radio position electronics equipment interfaces with RCE. A main distribution frame (MDF) will be provided by the Government as part of the common carrier facility.
The contractor shall provide the cables required for the interconnection of the RCE and the MDF. The contractor shall provide an intermediate distribution frame (IDF) and all associated cabling to RCE modules. For Type I sites, IDF shall be an integral part of the RCE cabinets; for Type II sites, a separate, free-standing (IDF) shall be provided. The IDF shall be provided with blocks which allow the Government supplied cables from the radio position electronics equipment interfaces to be terminated. The contractor shall provide at least 25% more connectors than required for the initial capacity specified for each facility. Wire and cables used in the RCE shall be as specified in paragraph 3.5.38 of FAA-G-2100.

3.8.2.4.1 Patch Panels - Patch panels shall be provided as required to accomplish the maintenance functions described in section 3.6 of this specification.

3.8.2.5 Cabinet or Enclosure Prewiring - All RCE cabinets and enclosures shall be prewired as specified in the following paragraphs. All cables and wires, harnessed or single, shall be suitably protected against chafing, where required, and such protection shall be independent of the individual wire or cable insulation or jacket.

3.8.2.5.1 Facility Expandability - The RCE cabinets and panels shall be fully prewired to accept the PCBs and modules required for expansion in accordance with paragraph 3.8.2.2(a). The cabinet or enclosure interconnecting cables required for expansion in accordance with paragraph 3.8.2.2.(a) shall be provided as described in paragraph 3.8.2.5.2. These cables shall be terminated within the RCE cabinets or enclosures. Where one end of the cable terminates in a cabinet or enclosure which is not initially supplied, it shall be tied back and secured pending expansion. Interconnecting cables between those cabinets required solely for expansion in accordance with paragraph 3.8.2.2(b) shall be provided as required.

3.8.2.5.2 Cable Entrance and Exit - Cabinet or Enclosure interconnecting cables shall normally enter and exit through the top. At facilities with raised floors, cables may be routed from overhead cable trays along the side of the RCE cabinet/enclosure to allow cables to be routed beneith the floor. Such cable runs shall be enclosed with removable covers to allow access by technicians for maintenance. Direct cabling through the sidewall of cabinets, excluding power cabling, at least six inches above the floor, may be utilized within a subsystem where distance is considered a critical factor by the contractor in circuit performance. Direct cabling shall not in any way compromise the requirements of expandability. The contractor shall provide cable entrances and exits with coverplates, where required.

3.8.2.5.3 Cable End Terminations - Signal cable end terminations shall be solderless quick disconnect terminal blocks and/or solderless wirewrap terminal blocks or connectors. Power cable and terminations shall be screw-type terminal blocks, pressure contact terminal blocks or connectors. Where connectors are used, each connector shall be provided with at least ten percent spare contacts. Cable connectors associated with RS-232 interfaces shall comply with that standard.

3.8.2.5.3.1 Cable Connector Keying - Cable connectors need not be keyed but each cable end and its terminating socket shall be clearly marked with the proper reference designations in accordance with paragraphs 3.8 and 3.9 of FAA-G-2100.

3.8.2.5.4 Maximum Facility Expansion - Expansion shall be accomplished by the addition of RCE cabinets enclosures and distribution frames. Prewiring of initial RCE cabinets or enclosures to accommodate maximum expansion shall be provided. However, if interconnecting cables between existing RCE cabinets or enclosures are required to be added to accomplish the maximum size facility configuration, the terminations for these cables in accordance with paragraph 3.8.2.5.3 shall be provided in the initial RCE cabinets or enclosures.

3.8.3 Cabling - The contractor shall provide all intra and interconnecting cables and connectors required for factory testing, site installations, check out, and acceptance testing and operations and maintenance of the system. This requirement applies to all locations.

3.8.3.1 Power Cables - All RCE AC power cables and wiring shall be in accordance with 3.9.

3.8.4 Utilization of Commercial Equipment in RCE - Where expressly permitted by other paragraphs of this specification, the contractor may elect to use commercially available equipment, subject to Government approval, within the constraints identified in the following subparagraphs:

3.8.4.1 Commercial Equipment Defined - Commercial equipment is defined as equipment items which may be included, subject to Government consent, in the RCE which:

(a) Are not specifically designed to meet an FAA specification.

(b) Are standard product line, catalog-listed items available from two (2) or more suppliers.

(c) Have published technical descriptions and operational/storage environment characteristics.

(d) Have supporting instruction manuals for theory of operation and user procedures, maintenance, repair, logistics support and detailed trouble shooting procedures.

3.8.4.2 Justification of Utilization - The utilization of any commercial item in RCE shall be justified and handled through the non-standard part approval procedures defined in FAA-G-2100. Government consideration will be given to the use of commercial equipment proposed by the contractor, under the following general guidelines:

(a) An FAA-approved item is not available to fit the requirement.

(b) The use of the item in RCE shall not compromise the functional, availability, maintainability, and performance and service condition requirements of this specification.

(c) Reliability predictions and demonstrations performed on the item in accordance with paragraphs 3.7.3 and 3.7.5 and Section 4.0 of this specification meet the reliability requirements of this specification.

3.8.4.3 Inclusion in RCE Design - All such items when incorporated in the RCE design shall be included in the RCE design data by manufacturer, model number and type. A complete list of this equipment shall be prepared and maintained as part of the system design data. Changes in design which involve form, fit or function as they relate to mechanical and electrical interfaces and functions specified in the system design data shall not be incorporated in the RCE or RCE documentation without prior Government approval.

3.9 Power Requirements

3.9.1 General - The RCE design shall meet as a minimum all power requirements contained herein. Paragraph 3.9.2 contains power requirements for the RCE Type I equipment, and paragraph 3.9.3 defines power requirements for RCE Type II equipment.

3.9.2 RCE Type I Site Power Requirements - At all Type I RCE installations AC primary power will be provided as GFE. The RCE shall include modularly sized DC power subsystems based on floating storage batteries with the battery charger operating from the facility AC mains. These RCE power subsystems shall additionally power all associated air/ground radio equipment. Refer to quantities in Table 2. The DC power subsystem shall provide + 24 volt DC outputs for Type I RCE and air/ground radio equipment with a four (4) hour battery reserve for full site operations in the event of the loss of AC primary power.

For design purposes the power requirements for the air/ground radio equipment (which normally consists of main and standby transmitters and receivers) are as follows:

a. Duty Cycles
Receivers on 100%
Transmitters on 100%; Keyed 50%

b. Receiver Load
0.4 amperes

c. Transmitter Load
Keyed: 5.0 amperes
Unkeyed: 0.2 amperes

d. Battery Voltage
22-30 Vdc at the equipment

The sizing requirements of IB1 modules for each Type I facility are specified in Table 5. The number of IB1 modules delivered to a Type I facility including the assignment of radio equipment to the IB1 module shall be in accordance with the contract schedule. Each IB1 module serves main and standby transmitters and receivers as defined in 3.3. The design shall provide for modular expansion of the DC power subsystem to accommodate ranges within the minimum/maximum requirements of Tables 2 and 5. Range increments shall be as determined by the contractor's design.

3.9.2.1 AC/DC Load Center Requirements - AC input power to the RCE will be provided by the FAA via a government furnished AC load center to interface the RCE power subsystem. An RCE DC load center shall be provided to route DC power to both the RCE and other site equipment. The RCE DC load center shall provide overcurrent protection, line voltage monitoring "on" "low" and "off" voltage status indications and on-off switching. The contractor shall be responsible for physically interfacing the RCE DC load centers with the FAA load center.

3.9.2.1.1 AC Line Characteristics - The AC voltage at the GFE primary power load center will be 102 vrms to 138 vrms, single phase, 57 Hz to 63 Hz. The contractor shall provide data on AC line power requirements for each site configuration required by the contract schedule and shall include this data in the Site Installation Plan as specified in 3.12.3. RCE equipment connected to the FAA load center shall operate under the conditions specified in 3.3.2.5 of FAA-G-2100.

3.9.2.1.2 Start-Up Surges - The RCE peak inrush current during start-up shall not exceed 5 times the normal peak operating current. The duration of the inrush current shall not exceed the requirements of FAA-G-2100 where the duration is defined as the time from input power application to the time at which the power returns to its steady state value.

3.9.2.1.3 AC Load Center - The RCE DC power subsystem charging equipment AC load center interfaces shall have the following characteristics.

3.9.2.1.3.1 Line Controls - Each control switch, relay, circuit breaker, fuse or other device, which acts to disconnect the AC supply line energizing the equipment, shall be in accordance with the applicable portions of the National Electrical Code. Switches or circuit breakers which function as "main power" switches, operating either directly or through a contactor to disconnect the AC line from the equipment shall break the AC line immediately after it enters the DC load center, via terminal block or connector, and before it reaches fuses or other parts. Each RCE assembly which is

energized by direct connection to the AC line shall have, as a minimum, a front-panel mounted "main power" switch or circuit breaker, a front-panel mounted AC line indicator light (reference FAA-G-2100, paragraph 3.5.17), and a front-panel mounted AC line indicating type fuse-holder if a circuit breaker is not provided (reference FAA-G-2100, paragraph 3.5.12). Electrical overload protection shall be provided in accordance with MIL-STD-454, Requirement 8 class 1 equipment, except that paragraph 4.4 of Requirement 8 is not applicable.

3.9.2.1.3.2 Isolation - For each individual chassis unit which is to be connected to the AC supply line, the DC resistance to ground from each input line terminal shall be not less than 1 megohm (AC line disconnected; fuses in place; AC line control contacts closed).

3.9.2.1.3.3 Alarm - The RCE AC load center interface shall provide an AC line alarm function. A dry contact closure shall be generated if the AC line voltage decreases below that level sufficient for proper battery charger and battery assembly operation for ten seconds or longer. The alarm shall be supplied at the maintenance panel and also transmitted back to the control site via the 300 baud data channel in one of the interconnecting trunks.

3.9.2.1.4 Battery Charger - The RCE battery charger shall be all solid state. AC line power shall be derived from the RCE/AC load center interface. A standard commercially available battery charger shall be used.

3.9.2.1.4.1 Alarm - A battery charger alarm function shall be provided. This alarm shall provide the equivalent of a dry contact closure in the event that the battery charger is unable to properly charge site batteries. The contractor shall provide design data relative to alarm implementation at the preliminary design review meeting. This data shall include the inter-relationships between battery characteristics, site loading requirements and internal battery charger alarm monitoring. The type of battery charger chosen shall be subject to government approval.

3.9.2.1.4.2 Charger Operation Requirement - The battery charger shall provide normal site RCE and air/ground equipment operation under all conditions of battery charging.

3.9.2.1.4.3 Charging Time - Recharge time to reach 80% capacity shall not exceed twice the discharge time. The contractor shall submit for government approval the minimum recharging time for the battery charger and batteries chosen versus site requirements for various battery discharge conditions.

3.9.2.1.4.4 Loss of AC Power - Under conditions of loss of AC line power or significant decreases of AC line voltage, the battery charger shall not provide a battery discharge path which results in lowering the site RCE battery reserve operation time below four (4) hours.

3.9.2.1.4.5 Operation without Battery Assembly - All performance requirements of the RCE and air/ground equipment shall be maintained when operating with the battery assembly in place. However, the Type I site shall be operable from the DC subsystem without the battery assembly in place without any greater degradation in performance than would be experienced from operating directly from the primary AC power source.

3.9.2.1.5 Battery Assembly - The battery assembly shall consist of all required batteries and all required battery interconnections, connections to the battery charger and connections to the RCE DC load center.

3.9.2.1.5.1 Battery Type - The type of batteries to be used shall be recommended by the contractor and is subject to government approval. Documentation concerning all power equipment specified in this paragraph shall be provided in accordance with 3.12.

3.9.2.1.5.2 DC Output Voltages - The output voltages shall meet all voltage requirements contained in this specification, 3.9.2, and any other voltages as determined by the contractor's design for the RCE, and all voltages required for air/ground equipment operation.

The contractor shall establish all required tolerances for output voltage variation, ripple, etc.

3.9.2.1.5.3 Output Capacity - The battery assembly shall be of sufficient capacity to furnish DC power for normal battery float operation of any of the site equipment configurations as indicated in Tables 2 and 5. Specifically, adequate power shall be available to simultaneously operate all site RCE and air/ground equipment for a minimum of 4 hours with no primary AC supply for any power supply modular unit required at a site.

3.9.2.1.5.4 Alarm - Each battery assembly operational voltage shall be monitored. The contractor shall determine voltage tolerances and appropriate overvoltage and undervoltage alarm limits. In the event any operational voltage exceeds an alarm limit an alarm signal shall be supplied to the maintenance panel and also transmitted back to the control site via the 300 baud data channel in one of the interconnecting trunks.

3.9.2.1.6 DC Load Center - A DC load center shall be provided to interface between the battery assembly and all RCE and air/ground radio equipment loads.

3.9.2.1.6.1 Capabilities - The DC load center shall provide the capability to monitor the DC voltage at each load distribution output. The DC voltage at any selected load distribution output shall be displayed by a digital readout which is accurate to within + 0.1%. The DC load center shall also provide one switch for each distribution output so that any combination of distribution outputs can be open-circuited for maintenance purposes. The DC load center shall provide a means to measure the DC current output to any selected load distribution output. Current in the selected load distribution output line shall be displayed by a digital readout which is accurate to within + 0.1%. No current or voltage measurement shall interrupt or degrade RCE and/or air/ground radio equipment operation. The capability for simultaneous voltage and current measurements on any given load distribution output shall be provided. Each operational voltage line from the battery assembly shall be protected by individual fuses or circuit breakers, located on the DC load center front panel, and placed electrically prior to DC load-splitting.

3.9.2.1.7 DC Distribution - The DC distribution system includes all apparatus required to effect DC power distribution between the DC load center and the RCE racks, panels and/or chassis, as appropriate, and air/ground radio equipment.

3.9.2.1.7.1 Feeder Locations - Feeder systems shall use overhead cabling. Feeder systems shall use underfloor cabling where raised floors are provided.

3.9.2.1.7.2 Branch Circuits - Branch circuits shall be provided to the lowest assembly level as determined by the contractors design.

3.9.2.1.7.2.1 Branch Circuit Protection - Each branch circuit shall contain a circuit breaker or switch/fuse combination for assembly protection. Distribution shall be so applied that circuit protectors in branch circuits will open prior to the opening of circuit protection in the DC load panel. Any external short circuit in the distribution system shall cause no damage to the battery assembly, battery charger or distribution system.

3.9.2.1.7.2.2 Branch Circuit Alarms - Each circuit protector shall contain means for activating a remote alarm. This alarm shall be supplied to the maintenance panel and transmitted back to the control site via the RCE/RMS interface.

3.9.2.1.7.3 Grounding, Bonding, Shielding and Transient Protection - Requirements for grounding, bonding, shielding and transient protection shall be as specified in applicable portions of FAA-STD-020. The Government will furnish the earth ground and AC power ground at all installations. The contractor shall furnish all other grounds as required by this specification. Grounding systems tied to earth ground shall be isolated from each other to prevent cross coupling through the ground system. The contractor shall submit for government approval his grounding plan as part of the Site Installation and Transition Plan (refer to 3.12.3).

3.9.3 RCE Type II Site Power Requirements - All RCE Type II modules shall utilize the same DC values as their corresponding Type I modules. The RCE power subsystem at Type II facilities shall only provide power to RCE modules and their interfaces.

The contractor shall submit a plan for implementing Type II power requirements in the Site Installation and Transition Plan (refer to 3.12.3).

3.9.3.1 RCE Type II Installation Powered from the GFE AC Load Center - GFE AC primary power will be provided at all Type II facilities and will have the same characteristics as stated in 3.9.2.1.1. The RCE power subsystem shall include AC to DC conversion equipment in modular sizes to accommodate the power requirements for RCE equipment quantities identified in Table 2. No provision shall be made for power to non-RCE equipment. Battery backup in the RCE DC power subsystem at Type II facilities will normally not be required since the primary AC power furnished at the GFE AC load center will be derived from the facility's UPS configuration. However, the contractor shall provide a design option in accordance with the contract schedule, to the Type II facility RCE DC power subsystem which shall be capable of providing the same four (4) hour battery reserve capability, similar to the requirement for a Type I site, for application where a GFE UPS is not provided.

The contractor shall supply an RCE DC load center similar to that specified for the Type I facility with provisions for the optional battery charger and battery assemblies. For each group of channels the contractor may, at his option, supply modular DC load centers and power distributions identical to those supplied in the corresponding Type I facility. Alternatively, a central DC source with optional provisions for a battery assembly and charger providing the same voltages as specified for the Type I facility may be utilized providing the capacity and reliability requirements are met. All branch circuit and alarm considerations for each group of modules within the power group shall be the same as those for the Type I facility as specified in 3.9.2. as applicable. Grounding, bonding, shielding and transient protection shall be in accordance with 3.9.2.1.7.3 except as required for adaption to each Type II facility.

3.10 System Performance Requirements

3.10.1 General - Minimum performance requirements for individual RCE modules are provided with the description of those modules in section 3.3. This section specifies the end-to-end performance requirements. In order to meet these overall performance requirements, it may be necessary for the contractor to establish performance levels for the individual modules that are more stringent than those specified in section 3.3. The contractor may budget the various performance parameters among the modules involved in order to provide optimum performance at minimum cost.

All performance numerics apply between the IDF in a control site (Type II facility) and the terminal strip in a remote site (Type I facility). These are the points at which connection is made to GFE radio position electronics equipment interfaces at the control site and radio transmitter and receiver interfaces at the remote radio sites. Furthermore the RCE performance numerics are isolated from the performance of trunk facilities by applying the performance characteristics of a trunk simulator as specified in 3.11.1. Thus, the performance requirements of the RCE are isolated from any degradations from the radio position electronics equipment, the radio transmitter/receiver complex or variability in the interconnecting trunks. First article tests and design qualification tests specified in Section 4. will be performed in the test bed facility (3.11), assuring that the measurements will be made in complete isolation.

The RCE shall meet the functional and performance requirements of this specification when aligned and adjusted in accordance with procedures in the RCE system instruction manual. When operated in accordance with system functional requirements, performance requirements shall be met over the full range of service conditions specified in 3.8. In addition, performance requirements shall be met during light, moderate or full peak-busy hour system traffic loading.

3.10.2 Audio Parameters - The following characteristics shall apply to all audio signals passing through the system whether they originate in the control site or remote site. In all cases the parameters shall apply equally to signals injected at the control site IDF and measured at the remote site terminal strip, and to signals injected at the remote site terminal strip and measured at the control site IDF.

3.10.2.1 Impedance - Each audio circuit shall be designed to match impedance levels as specified in 3.3. The minimum return loss at the VSCE (IIB1), and Common Carrier Trunk (A1) RCE interface shall be as follows:

Frequency	Return Loss
300 - 800 Hz	>= 21 dB
800 - 2500 Hz	>= 24 dB
2500 - 3000 Hz	>= 21 dB

The return loss of the RCE radio interfaces shall be 26 dB minimum. Measurement of return loss shall be according to MIL-STD-188-100, dated 15 November 1972 paragraph 40.3.10.4. Over the frequency range of 300 to 3000 Hz the longitudinal balance at the VSCE (IIB1), and Common Carrier trunk (A1) RCE interfaces shall be 40 dB minimum.

3.10.2.2 Noise - The combined hum and noise level of any single path of an idle audio circuit, with both ends of the circuit properly terminated, shall not exceed +23 dBrnC. Noise shall be measured with a Western Electric 3A Noise Measuring Set through a C-message weighing filter, or the equivalent.

3.10.2.3 Impulse Noise - The peak level of impulse-type noise generated within the system when measured on a single path of an idle audio circuit, with both ends of the circuit properly terminated, shall not exceed one (1) hit within a 15 minute period above a level of +50 dBrnC. Impulse noise shall be measured through a C-message weighing filter, or the equivalent.

3.10.2.4 Crosstalk Attenuation - The crosstalk attenuation between any transmit and receive path of an audio circuit or between any two (2) four-wire circuits shall not be less than 72 dB.

3.10.2.4.1 In-Band Signaling Notch Crosstalk - Audio crosstalk into the in-band signaling notch shall exceed 50 dB. Conversely, audio signaling tones used for in-band signaling shall be at least 65 dB below the nominal voice level when measured at the receiving voice path audio termination. The 300 baud signaling notch in the 300 - 3000 Hz audio path shall not cause objectionable effects on voice intelligibility, recognition, and interference when voice and 300 baud signals are simultaneously transmitted or received.

3.10.2.5 Frequency Response - The audio signal amplitude at frequencies between 300 and 1825 Hz and between 2425 and 3000 Hz shall be within +/- 1.5 dB of the 1000 Hz amplitude level. This excludes the in-band signaling notch pass-band. The data notch pass-band filter amplitude response relative to the response at 2125 Hz shall be within +/- 1.5 dB between 1950 and 2300 Hz. The RCE roll-off characteristics of the voice frequency paths below 300 and above 3000 Hz shall, as a minimum, be that of at least a second order filter having a decreasing amplitude slope of greater than 9 dB/octave for frequencies less than 150 Hz and greater than 4000 Hz. The data notch pass-band filter and the band reject

filter characteristics with respect to the 1000 Hz level in the 1825 to 2425 Hz region shall be as determined by the Contractor's design, but shall meet the requirements of paragraph 3.10.2.4.1 as a minimum, and shall be subject to government approval as required under 3.3.1.2.1 (b).

3.10.2.6 Harmonic Distortion - For a single tone input level of 0 dBm at the IIB1 input or +10 dBm at the IB1 input the total harmonic distortion at the output interface shall be as follows:

Frequency	Total Harmonic Distortion
300 - 800 Hz	< 4.0 %
800 - 1825 Hz	< 2.5 %
2425 - 3000 Hz	< 2.0 %

The measurement shall be band limited to 300 - 3000 Hz.

3.10.2.7 Intermodulation Distortion - The rms sum of all intermodulation products resulting from any two frequencies between 300 and 3000 Hz when applied to an audio circuit each at a level of -3 dBm shall not exceed -37 dBm.

3.10.2.8 Audio Level Regulation - Audio level regulation shall be provided as specified in 3.3.

3.10.3 Data Parameters - Each RCE channel shall provide data exchange capability as well as audio capability. On the outbound leg (from control site to remote site) a 300 baud capability shall be provided operating in an inband notch within the audio channel and a 1200 baud capability to operate in place of the 300 baud plus audio capability. On the return leg (from remote site to control site), only the 300 baud plus audio capability shall be provided. These data capabilities shall be used for the exchange of operational and control messages and for the support of other systems external to the RCE. Data exchange with external systems shall be through EIA-RS-232 interfaces located in the IB2 and IIB2 modules. The following characteristics shall apply to all data transfers whether they use the 300 baud,1200 baud or 2400 baud capability. Furthermore, they shall apply to both the outbound and inbound legs of the four-wire trunk capability. Each characteristic shall apply to signals applied at an EIA-RS-232 interface and measured at the other EIA-RS-232 interface.

3.10.3.1 Transparency - Operation of the RCE data capability shall be independent of the character structure, character code, message frame structure, information content, and message duration of the data being transmitted.

3.10.3.2 Data Rate - The RCE data capability shall be unaffected by data rate variations of up to 2% from the nominal data rate.

3.10.3.3 Signal Characteristics - All data interfaces with source equipment and interfaces with destination equipment shall adhere to the characteristics established by EIA-RS-232.

3.10.3.4 Distortion - All data interfaces with source equipment shall operate satisfactorily with signal distortion levels up to those indicated for EIA-RS-404 Performance Category II. Output distortion with input signals over the range for Performance Category II and transmission via a trunk simulator as specified in 3.11.1, shall not exceed the signal quality limits for Performance C.

3.10.3.5 Error Rate - Bit error rate on data channels in the RCE shall not exceed one bit error in 10xE8 bits when transmitting data continuously for 96 hours. This bit error rate shall be provided on all 300 baud and 1200 baud channels. The bit error rate shall be measured in the test bed environment with a trunk simulator, as specified in 3.11.1, connecting the Type II to Type I equipment. These measurements shall be made without noise injection in the trunk simulator. The measurements shall be made by injecting random character streams at an RS-232 interface comparing the character stream at the destination RS-232 interface with that at the source and counting bit errors.

3.10.3.6 Switching Time - Switching between the 300 baud plus audio capability and the 1200 baud capability is initiated in response to some stimulus such as depression of a push-to-talk bus. The switchover to 1200 baud capability at the remote site takes place when the tones associated with the 300 baud FSK transmission disappear. Return to the 300 baud capability takes place when the 1200 baud tones disappear. This process is described in 3.4.1.2.1.

Switchover from 300 to 1200 baud capability or from 1200 to 300 baud capability shall be complete, and the system shall be capable of supporting transmission at the new data rate, within 5 ms after the change in voltage level that initiates the switchover. Switchover time shall be measured in the test bed environment with the trunk simulator (3.11.1) providing the connection between the Type II and Type I equipment.

3.10.4 Functional Response to Messages - Functional control of the RCE and of the associated radio transmitters and receivers and operator console equipment interfaces shall be controlled by the logical combination of various driving functions which are generally in the form of contact closure or DC levels. When the driving function is at one facility and the control must take place at another facility, the required transmission of information shall be by means of operational and control messages as described in 3.4.2.1. The transmission techniques result in some time delay, which must be held to a minimum.

TABLE 15
FUNCTIONAL MESSAGE RESPONSE TIME (Note)

Control Function	Required Response Time	
	Without Noise Injected	With Noise Injected Per 3.10.4.3
	Maximum Time	Maximum Time
Push-To-Talk	40 ms	100 ms
PTT Confirmation	160 ms	340 ms
Push-To-Talk Release	40 ms	100 ms
Squelch Break	160 ms	340 ms
Remote Selective Mute	40 ms	100 ms
Transmitter/Receiver M/SB Selection	40 ms	100 ms
Dual Control Facility Frequency Override	40 ms	100 ms
Remote Loop Back	50 ms	120 ms

NOTE: Response times are defined as the time interval from the application of the driving or controlling state to the B1 module interface at the facility initiating the action, until the required state appears at the B1 module interface at the facility being controlled. Functional message response times shall exclude the five (5) millisecond switching time (3.10.3.6.), time delay to account for time skew of multiple initiating signals (3.4.2.1.2.4), any delays resulting from contention with other control functions or messages (3.4.2.1.2.1 and 3.4.2.1.2.2), and transmission propagation time.

The RCE shall be designed to exercise the required functions within the time constraints listed in Table 15. For each listed control function there shall be a release function. Release functions shall have the same time constraints as the function they release, and shall be measured from the time of removal of the driving function. These two constraints shall be met over the following temperature ranges:

Type I Equipment	-29 degrees C to +50 degrees C
Type II Equipment	+10 degrees C to +50 degrees C

3.10.4.1 Response Time Verification - Time required for initiation and release of all operational and control functions contained in this specification shall be measured as a part of the First Article Tests and Design Qualification Tests described in section 4. These tests shall be performed in the factory test bed environment as described in 3.11 with a trunk simulator as described in 3.11.1 providing the connection between Type II and Type I equipment.

3.10.4.2 Temperature Tests - Response times and functional performance shall be verified for all First Article RCE equipment operating over the temperature range specified in 3.10.4 above. These tests shall be performed in the test bed environment as specified in 3.10.4.1.

3.10.4.3 Noise Tests - Response times specified in Table 15 shall be verified under various conditions of circuit noise. Noise shall be injected in the trunk simulator as described in 3.11.1 in both the inbound and outbound legs of the trunk. Tests shall be run in the presence of impulse noise and separate tests shall be run with white noise. Three hundred baud and 1200 baud modes shall both be subject to the noise tests.

Impulse noise tests shall be run with function activations at a rate of one activation per second. Impulse noise shall be simultaneously injected at random intervals at an average rate up to two impulses per second. Impulse amplitude shall be varied over the range from -31 dBm to 0 dBm. Impulse duration shall be varied over the range from 0.5 ms to 30 ms in 0.5 ms steps. White noise tests shall be conducted with function activations at a rate of one activation per second. White noise shall be simultaneously injected at various levels from -45 dBm to -25 dBm in 5 dB steps of 3.5 seconds duration.

Data shall be collected consisting of a count of the number of functional initiations for each test interval, the number of activations that are delayed longer than the times specified in Table 15 during each test interval, and the number of initiations that do not result in an activation for each test interval.

No more than 1 out of 1000 single functional activations shall be delayed longer than the maximum time specified when noise is injected as specified herein. No more than one PTT initiation shall fail to result in a true transmitter keying state and a true release state during a 96 hour test period with noise being injected as specified herein and with PTT functions occurring at a rate of one per second.

3.10.5 Channel Recovery - For all channel configurations, any failure within the RCE or external trunk transmission facilities shall be recognized within 20 ms following the failure condition. Recovery procedures shall be completed within one second following the determination that an actual failure has occurred. Alarm messages shall be delivered to the control site, displayed and recorded within 3 seconds of the failure determination.

3.10.5.1 Start Up - All channel configurations shall include the ability to start operation following a power off condition at either the Type I or Type II facility, without the requirement for manual activation. The RCE equipment shall be fully operational within one minute of the availability of stable power. A power off alarm shall be displayed at the Type II facility maintenance panel within 3 seconds after a.c. power off condition exists.

3.11 Factory Test Bed Requirements - The contractor shall design and install a factory test bed which shall permit the testing and evaluation of RCE modules and module configurations as required by this specification and the contract schedule. The test bed shall integrate contractor provided engineering models of simulated radio position and GFE equipment and associated RCE IIB1 module interface adapters, if required, which shall be utilized for man/machine functional controls and displays to validate functional and performance characteristics of RCE module configurations. This equipment shall be furnished in accordance with the contract schedule and as defined below:

(a) Existing console radio position equipment for a total of 16 frequencies - 4 positions, 2 of each type each with 8 frequencies [4 channel and solid state (FAA-E-2290)].

(b) ICSS radio position equipment and RCE interfaces for 24 frequencies - 2 positions each with 12 frequencies.

(c) VSCS radio position equipment associated with the planned sector suite concept for 12 frequencies - 2 positions each with 6 frequencies.

The contractor is not required to design these models in conformance with any set of specifications except that all man/machine functions associated with en route, terminal and FSS air/ground operations, including the required displays and indicators, are provided and are functionally responsive and interact with the IIB1 modules in accordance with their specified interfaces covered in Appendix B, NAS-IR-41024201, and NAS-IR-41024202. The position equipment for these models shall be mounted in desk top consoles. Wiring and cabling of the positions, interfaces, including adapters where provided, shall be integrated in the test bed. Each set of positions (2), as a minimum shall include PTT lockout capability, PTT confirmation indicators, transmitter/receiver select capability, a headset, microphone or foot switch, remote selective receiver muting control with appropriate indicators, voice transmit and receive capability on any of the selected frequencies, voice transmit and receive audio level control, loudspeaker/headset operation and syllabic indicators. Main/standby transmitter/receiver selection and control capability shall also be provided in these models. Parts and materials used in these models shall utilize good commercial grade new elements and are not subject to the requirements of 3.8 of this specification.

3.11.1 Test Bed Design Requirements - The factory test bed shall have the capability of establishing any of the module configurations required by this specification and as required by the contract schedule. 4-Wire transmission facility demarcation points shall be established to permit the interconnection of a radio site configurations with control facility configurations either by direct connections or via trunk simulators. The trunk simulators shall provide the transmission characteristics of a 4-wire type 3002 circuit, or equivalent including the capability for injection of impulse noise at variable amplitudes and rates and the injection of white noise of variable levels. The test bed design shall have the capability of connecting up to 12 trunk simulators. The quantity of trunk simulators to be provided initially shall be in accordance with the contract schedule. The test bed shall consist of all necessary connectors, cabling, patch panels, processors, peripherals, power, test and measuring equipment and maintenance equipment as required to conduct individual module testing, configuration functional testing and performance testing in accordance with 3.10 and Section 4. The capability for off-line reduction and analysis and the display and print-out of selected performance factors shall be provided. Provisions for loading a module configuration with variable traffic volumes including voice, PTT and other RCE control functions and RMS data via the appropriate modules, shall be provided. All interfaces between modules and external systems, including position equipment and radio equipment interfaces for any configuration in the test bed shall be identical to those required in a delivered site configuration.

3.11.2 First Article Module Test Bed Configurations - The test bed shall be capable of performing functional, performance, reliability and maintainability testing in accordance with Section 4, on individual modules and module configurations mounted in their pre-wired subassembly, assembly or cabinet frames. The quantity and types of modules and the module configuration of first article unit shall be as specified in the contract schedule. Since the environmental requirements of radio site modules differ from the control facility environment, the test bed shall be capable of performing end-to-end channel and configuration testing with simultaneous and separate environmental conditions established for the Type II and Type I module configurations under test and evaluation. Environmental ranges shall be as specified in 3.8.

3.11.3 Production Module Test Bed Configurations - The factory test bed shall be utilized to provide factory government acceptance of deliverable production modules. The test bed therefore shall have the capability of performing type testing (as defined in FAA-G-2100, paragraph 4.3.3), configuration testing, software testing and all other tests as specified in Section 4 for all deliverables required by the contract schedule. The test bed therefore shall be maintained by the contractor in a calibrated condition throughout the duration of the contract and subject to periodic inspection and operable status testing by the Government.

3.11.4 GFE and Services Applicable to the Test Bed - Where deemed necessary by the Government and as specified in the contract schedule, VHF and UHF radio equipment, external interfaces and other equipment will be provided by the Government which shall be installed in the test bed by the contractor. This equipment shall interface with contractor furnished Type IB1 modules and Type IIB1 modules and other RCE modules as required by this specification. Standard test and measuring equipment will be furnished, subject to government concurrence and approval. A list of standard test equipment required by the contractor for test bed utilization shall be submitted not later than 6 months prior to the date of first article delivery to the test bed. The Government will also furnish any available documentation on 4-channel radio position equipment, ICSS radio position equipment and VSCS radio position equipment to provide references applicable to the design and fabrication of the position equipment engineering models to be utilized and categorized as special test equipment.

3.11.5 Test Bed Data Storage and Retrieval - Test data, adaptation data utilized, and all other data recorded during each use of the test bed for first article and deliverable units shall be permanently stored on magnetic media. These media shall be considered as test documentation. The test bed data retrieval

capability required in 3.11.1 shall be available to the Government upon request, to provide display and printout of selected test data for quality assurance and failure trend analyses purposes, as required by the contract schedule.

3.12 Documentation - RCE documentation shall be delivered as required by the contract schedule and as required by this specification. Documentation shall include hardware, firmware, and software design data, test bed design data, test procedures, configuration management, technical and program reports, installation plans, instruction books, and other documentation to be supplied in accordance with the contract schedule. The contractor shall plan for design review conferences throughout the first article design and fabrication phase of the contract. These conferences will require design data and other relevant documentation which shall be made available to the Government representatives at these conferences for purposes of review, and discussions and approvals where required by the contract schedule and by this specification.

3.12.1 Instruction Manuals - The contractor shall prepare instruction manuals in accordance with the requirements of FAA-D-2494/b and with quantities as specified in the contract schedule. If standard commercial equipment is utilized either in RCE module designs or channel configurations the supplier's instruction manuals will be acceptable if judged by the Government to be sufficiently complete so as to meet the information content specified in FAA-D-2494/b. When so approved, the commercial instruction manual material, however, shall be integrated into the text of the RCE instruction manuals. Software related information in instruction manuals shall not duplicate material required in contract deliverable software documentation. Software related material included in the instruction manuals shall be in accordance with documentation standards required under 3.5.3 Software Documentation.

3.12.2 Computer Programs - Complete documentation of all processor software or firmware shall be provided in response to the requirements of 3.5 and the contract schedule. This documentation shall clearly reflect Type I and Type II modules and module configurations and functions. Documentation shall include computer program organizational specifications (CPOS), performance specifications, program flow charts and program listings in the highest level language in which the programs are written as specified in 3.5.

3.12.3 Site Installation, Cutover, Test and Checkout - The contractor shall provide one Master Installation and Transition Plan and Installation and Transition Plans for each site location specified in the contract schedule. The Master Plans shall include all proposed standard implementation methodologies, general

maintenance, installation and cutover procedures, expansion criteria, test and checkout procedures, Government equipment and services required, floor plans, cabling and grounding practices and other items relevant to planning, scheduling, shipping, and emplacement related to delivery dates and the required operational dates. The Site plans shall provide specific details concerning each site and site peculiar variations from the Master Plans. Upon completion of a site installation and acceptance by the Government the contractor shall submit two copies of the "as built" site installation drawings including cabling, power, floor plan and equipment identifications. The "as built" drawings shall indicate all changes or variations from the Site Installation and Transition Plan and the Master Plans as applicable. Engineering drawings shall meet the requirements of FAA-STD-002.

3.12.4 Configuration Management - The contractor shall provide a Configuration Management Plan in accordance with FAA-STD-021, Appendix I and the contract schedule. The plan shall reflect both hardware and software plans. The contractor shall be responsible for its implementation and application to subcontractors, vendors, and suppliers. Upon acceptance of the First Articles the equipment's configuration, including the appropriate descriptive documentation, shall be baselined. Thereafter, the contractor shall submit any engineering change proposal which affects baselined hardware, software or documentation (e.g., instruction books, installation drawings, etc.) to the Government for approval in accordance with FAA Order 1800.8.

4.0 Quality Assurance - The contractor shall provide and maintain a quality control system in accordance with FAA-STD-016, Quality Control System Requirements, and FAA-STD-018, Computer Software Quality Program Requirements. The quality control system shall provide for controls and for inspections and tests required to substantiate product quality for, as a minimum, hardware, firmware, software, design, production, procurement, tests, maintenance, training, spares, installation and all deliverable documentation.

4.1 Test Planning - An overall test control document including the format of test procedures and test data forms (Master Test Plan) shall be provided with provisions for continual updating. The Master Test Plan shall contain separate sections covering factory tests and site tests. The factory tests shall be conducted in the factory test bed in accordance with 3.11. Site tests shall include a repeat of selected performance and interface testing previously completed in the factory test bed. As part of the Master Test Plan, the contractor shall provide an index of appropriate test procedures associated with each RCE module and identify the tests to be used to demonstrate compliance with each of the module functions. The

Master Test Plan shall clearly indicate, by specification paragraph reference the correlation of the test procedure with specific specification requirements. The factory test bed shall be used for all individual module level testing and module configuration testing. Module level and configuration testing shall be conducted at each site as validation that compliance to the specification requirements have been achieved in the site environment, subsequent to installation and checkout. Test procedures shall be prepared and available for Government review and approval in accordance with the contract schedule. Test procedures shall list all test equipment and test software required. Test equipment descriptions shall include make, model, serial number and certification data. Test software and other test equipment built into the factory test bed shall be subject to Government test bed design approval as specified in 3.11.

4.1.1 Factory Tests - The factory test bed shall initially be utilized for first article testing and subsequently for continual production testing. First article testing shall consist of module design qualification testing, module integrated configuration testing, reliability demonstration testing and maintainability demonstration testing. Production testing shall consist of module performance testing and integrated module configuration testing for each deliverable module configuration. If a module design is modified as approved by the Government due to field experience or production factors the affected module shall be subject to another design qualification test prior to further production authorization. The Master Test Plan shall be updated to reflect the modification and revised test procedures as required. In addition, revisions to all documentation impacted by the modification shall be implemented within 5 days after Government approval of the design qualification test data. The Master Test Plan shall therefore contain a cross reference to all documentation relating to individual module designs including but not limited to reliability and maintainability documentation, design data, spares and installed "as built" configurations.

4.1.1.1 Module Design Qualification Tests - Each first article module required by the specification and contract schedule including its interfaces shall be individually tested in the factory testbed. These tests shall validate the hardware, firmware and software design data, the requirements of the specification, the input/output allocated performance requirements as determined by the contractor's design, mechanical and packaging designs and maintenance features. The Government will witness these tests prior to their integration into the required module configuration. The Master Test Plan shall describe and justify the module design qualification tests and any external test or simulation techniques required as may be applicable to individual module testings. Firmware and software associated with a module shall meet the requirements of 3.5 and FAA-STD-018.

4.1.1.2 Module Configuration Design Qualification Tests - First article modules previously approved by individual design qualification tests shall be integrated into test bed module configurations as specified in the contract schedule. These configurations shall include the position equipment engineering models, system interfacing components, GFE radio transmitters, receivers and transceivers and trunk simulators as required in 3.11.

Each first article configuration established shall be tested for end-to-end functional performance requirements as specified in 3.2 and 3.10 as applicable to the configuration. Reliability and maintainability testing and demonstrations shall be conducted on each configuration in accordance with 4.1.1.3 and 4.1.1.4. The Master Test Plan shall describe and justify all module configuration design qualification tests, the method of traffic loading for voice and data interchange, simulation techniques and the method for collecting, formatting and analyzing configuration test results.

4.1.1.3 Reliability Demonstration Testing - The contractor shall perform a reliability demonstration test on each first article configuration established in the test bed. The position equipment engineering models, the GFE radio equipment and the trunk simulators shall be excluded from data collection but functionally utilized. The basic accept/reject criteria shall be as specified in 3.7.2 Table 13. The reliability demonstration shall be performed in accordance with Test Plan VI C of MIL-STD-781C. Testing shall be performed at ambient temperature of +25 degrees +/- 5 degrees, Celsius for Type II and Type I configurations.

4.1.1.4 Maintainability Demonstration Testing - The same configurations of first article modules used for reliability testing in accordance with 4.1.1.3 shall be utilized by the contractor to conduct corrective and preventive maintenance demonstrations in accordance with MIL-STD-471. The task selections shall be as outlined in Appendix A of MIL-STD-471 and based on the Maintainability Failure Modes and Effects Analysis required in 3.7.3.2.4. Method I, Plan A1; plus Plan B2 of MIL-STD-471 shall be employed by the contractor for both statistical and non-statistical corrective maintenance tasks. The contractor shall submit 300 sample corrective maintenance tasks in accordance with the procedures outlined in Appendix A of MIL-STD-470 for each module configuration established in the test bed. The Government will randomly select 30 of these tasks for statistical corrective maintenance demonstration. Correction of failures which occurred during the reliability demonstration and other corrective maintenance tasks selected by the Government, totalling 30 tasks, shall be used for the non-statistical corrective maintenance demonstration. For both the statistical and non-statistical corrective maintenance demonstration, individually, the MTTRs shall not exceed the values specified in 3.7 Table 14.

4.1.1.4.1 Preventive Maintenance Demonstration Tasks - The contractor shall develop a preventive maintenance plan, including all preventive maintenance tasks and the frequency at which they will be performed. These tasks and frequencies shall be consistent with the requirements of 3.6 and 3.7. Each preventive maintenance task shall be performed during the preventive maintenance demonstration on all first article configurations established under 4.1.1.3 and 4.1.1.4. The ability to perform preventive maintenance without degrading functional RCE performance shall be demonstrated. Preventive maintenance tasks and their frequency shall be incorporated as part of the Instruction Book as required in 3.12.1.

4.1.1.5 Production Testing - The Master Test Plan shall include procedures for production testing including production test software. Production tests shall be performed on all deliverable modules to insure each module meets the required design and performance characteristics established during first article testing. Type testing shall be performed as specified in paragraph 4.3 of FAA-G-2100. Each configuration of modules required to be delivered shall be established in the factory test bed after individual module testing, and as a minimum the following system tests shall be conducted:

(a) All channel functional requirements specified in Section 3.2.1 of this specification are met

(b) All tests required to validate that the performance requirements specified in paragraph 3.10 of this specification have been met

(c) All software, firmware program packages including site adaptation data are in agreement with the contract schedule and specification requirements

(d) All interfaces are functionally operative in accordance with the requirements of 3.3, 3.4, Appendices B, C, and D, and the appropriate Interface Requirement Documents (IRDs).

4.1.2 On-Site Tests - The Master Test Plan shall include on-site testing procedures for both Type I and Type II facility installations as well as overall testing between the Type I and Type II module configurations utilizing the assigned 4-wire transmission facilities connecting the two facilities. All tests shall be conducted using operational and maintenance software/firmware and adaptation data associated with both Type I and Type II facility configurations specified in the contract schedule. As a minimum the following tests shall be performed:

(a) Channel operational and support functional performance testing for the installed configuration

(b) Channel recovery functions

(c) Simultaneous control, operation, and maintenance data interchange

(d) Maintenance panel interoperation between Type I and Type II configurations including portable terminal operation including order wire operation

(e) MPS/RMS data interchange transparency and priority interrupts

(f) Validation of data interchange procedures and protocols as required by 3.4 and as implemented by the contractor's design under maximum load conditions

(g) Interoperation with all system interfaces at the Type I and Type II facility.

4.2 Electromagnetic Interference (EMI) - The factory test bed shall be utilized to conduct EMI tests as defined in MIL-STD-461 and MIL-STD-462. Execution of the following tests is required to satisfy the EMI contract obligations:

CE01	CS01	RE01	RS02*
CE02	CS02	RE02	RS03
CE03	CS06		
CE04			

*RS02 test levels shall be +/- 1000 Volts

For purposes of testing, power filters and cable duct shielding shall be incorporated in the test bed. These features shall not be required for deliverable system configurations. The EMI/EMC limits presented in MIL-STD-461 shall be used as test guidelines and reference data and not to establish EMI test pass or fail criteria. If, after installation at Type II and Type I sites and prior to final site acceptance an EMI related problem occurs, the contractor shall perform an analysis which shall identify the problem. If the problem is caused by a deficiency in design or packaging of the contractor supplied equipment, the deficiency shall be corrected by the contractor at no cost to the government. If the problem is a result of environmental conditions beyond the control of the contractor, the government will be responsible for resolving the problem.

5. Preparation For Delivery

5.1 Direct Shipment to a Site - Shipment of material from the contractor's plant to a specific site within the continental limits of the United States shall be via a padded electronic type moving van and prepared for delivery in accordance with MIL-E-17555, Level A. Shipment of material to Alaska, Hawaii and Puerto Rico shall be in accordance with the contract schedule.

5.1.1 Small Component Material - Small individual items or components shall be packed and marked both internally and on the exterior surface of the container. Packing of this material shall be in accordance with MIL-E-17555, Level C.

5.2 Material for Inventory Storage - Material being delivered for inventory storage shall be packed in accordance with the requirements of MIL-E-17555, Level A.

5.3 Packing of Systems or Subsystems for Storage - Systems or subsystems to be placed in storage at an FAA or Government facility shall be packed in accordance with MIL-E-17555, Level A.

6. Notes

6.1 Note on Information Items - The contents of this section are for information and reference purposes only and not part of the requirements of this specification unless specifically incorporated in the contract schedule.

6.2 The Following Documents are Listed for Reference and Information Purposes:

(a) FAA HDBK 6530.2 Interphone Switching System

(b) DOT HDBK DOTPRS-1 Manual for Control of Property in Possession of Contractors

(c) FAA ORDER 6000.30 Airway Facilities Service Policy Decisions for the Maintenance Program of the 1980s

(d) National Airspace System Plan, June 1988

(e) Integrated Communications Switching System (ICSS) Specification, FAA-E-2767

(f) VSCS Specification, FAA-E-2731

APPENDIX A:

GLOSSARY ACRONYMS

AND DEFINITIONS

APPENDIX A

GLOSSARY
ACRONYMS AND DEFINITIONS

The following acronyms and definitions appear in this specification and its appendicies.

ACRONYMS

ACF	Area Control Facility
AFSS	Automated Flight Service Station
A-G	Air-Ground
AGC	Automatic Gain Control
ARTCC	Air Route Traffic Control Center
ATC	Air Traffic Control
ATCT	Airport Traffic Control Tower
BPF	Band Pass Filter
BUEC	Back Up Emergency Communications
CTS	Coded Time Source
CU	Control Unit or Communications Unit
EFAS	En Route Flight Advisory Service
FAA	Federal Aviation Administration
FSS	Flight Service Station
GFE	Government Furnished Equipment
Hz	Hertz
ICSS	Integrated Communications Switching System
IFR	Instrument Flight Rules
MPS	Maintenance Processor Subsystem
M/S	Main/Standby
NAVAID	Navigational Aid
NDB	Non-Directional Beacon
PTT	Push-To-Talk
RCAG	Remote Center Air-Ground
RCE	Radio Control Equipment
RCO	Remote Communications Outlet
RMC	Remote Monitor Control
RML	Radar Microwave Links
RMM	Remote Maintenance Monitoring
RMMS	Remote Maintenance Monitoring System
RMS	Remote Monitoring Subsystem
RTR	Radio Transmitter/Receiver Site
TCS	Terminal Communications System
TRACON	Terminal Radar Approach Control
UHF	Ultra High Frequency
UPS	Uninterruptible Power Supply
VHF	Very High Frequency
VOR	VHF Omni Range
VORTAC	Combined VOR/TACAN Navigational Aid
VSCE	Voice Switching and Control Equipment
VSCS	Voice Switching and Control System
VFR	Visual Flight Rules

DEFINITIONS

Audio	The voice signal received from or transmitted to aircraft.
Audio Gate	The term given to a solid-state switching device in the transmit and receive audio paths at both control and remote facilities which completes or interrupts the associated audio path and ensures audio signals appear at appropriate interfaces only.
Band Pass Filter	A filter introduced in the transmission path to permit passage of a selected frequency band at minimum transmission loss and sharply attenuate frequencies on either side of the pass-band at a very high transmission loss. (Usually > 50 db)
Band Reject Filter	A filter introduced within a selected pass-band to sharply attenuate a narrow selected band of frequencies within the pass-band (usually > 50 db). This filter creates a "notch" in the normal transmission pass-band.
Combining	Bridging more than one frequency on a single transmission line.
Common Control	Common control refers to those elements of the RCE which in some way affect the operations of one or more other elements. An example would be the element under whose direction a reconfiguration is carried out in order to compensate for a malfunction.
Component	Refers to a distinct sub-assembly of a system, the equipment installed in a facility, or a module.
Configuration	Refers to the physical arrangement and interconnection of equipment installed in a facility or between facilities.
Connectivity	All the hardware, software, and firmware required between two system or sub-system demarcations to support the existing and future operational requirements of the system or subsystems.

DEFINITIONS (Continued)

Consolidated Facility	The facility resulting from the combining of two or more smaller facilities. A consolidated facility may replace the smaller facilities, which are then closed, or it may control the smaller facilities remotely and continue to provide most of the services originally provided by the individual facilities.
Control Command	A binary word representing a particular control command together with the address for the control command.
Control Facility	A manned installation housing all the equipment and personnel required to perform and control specific local and remote air/ground communications functions.
Control Signal	A specific change in an electrical parameter, such as current, voltage, impedance, or frequency, which shall indicate remote muting, remote muting release, No. 1 and No. 2 equipment switching, and any other signals other than operational signals.
Decimal Digits	The Arabic figures 0 through 9.
Demarcation	Typically, a distribution panel or frame where two distinct systems or subsystems are interconnected; the electrical boundary between two systems or subsystems.
Dry-Contact Closure	A signal typically produced by the closing of a mechanical relay or an electronic switch.
Dual Control	Two positions at separate control facilities are assigned the same transmitter and receiver (radio channel) with primary and secondary control priorities.
Fail-safe	The system response which minimizes the effects of a system related failure on critical system functions.
IDF	Intermediate distribution frame, the demarcation between radio positions electronics equipment and RCE.

Interlock Function	The interlock function in air-ground communications prevents one controller from accessing a transmit capability when it is in use by another controller. The purpose of the interlock is to prevent mixed audio signals. In priority override the channel is cleared before the priority source takes over.
Local	Equipment or actions located or occurring in a building housing a control facility.
Main	Refers to equipment normally on-line as opposed to equipment normally off-line or in a standby status. May be used simply to differentiate between two redundant pieces of equipment.
Mixing	Combining audio signals from two or more sources and adjusting the power level of the resulting signal to within tolerances.
Mute	The suppression of voice or radio receive signals. The degree of suppression may be fixed or adjustable.
No. 1/No. 2	Used simply to differentiate between two redundant pieces of equipment.
Off-line	The term given to particular equipment available for operational use only after switching between equipments occurs.
On-line	The term given to the particular equipment in actual operational use as opposed to equipment available for use only through the electrically exchanging or switching of equipments.
Operational Command	A binary word representing a particular operational signal together with the address for the operational signal.
Operational Commands	Operational commands are those signals which facilitate the establishment of air-ground communications. They include the PTT command, PTT confirm, and PTT release and squelch break.

Operational Signal	A specific change in an electrical parameter, such as current, voltage, impedance, or frequency, which shall indicate PTT, PTT confirmation, PTT release, squelch break, squelch break release.
Override	The seizing of control of a shared transmitter by an operator at one control facility from an operator at another control facility.
Paired Frequencies	A specific VHF and UHF frequency assigned to a specific sector, combined on a dedicated single transmission line.
Path	The complete physical circuit from system input to system output including all circuit components required for the transmission of audio, audio plus data at 300-baud, and data at 1200-baud.
Radio Channel	A frequency-pair that can be operated in a selective or split mode.
Radio Position Electronics Equipment	All the equipment, components, and circuitry in control facilities related to air/ground radio communications and not included as part of RCE.
Receiver	Refers to one on-line and one off-line air/ground radio communications receiver. The two receivers shall be designated No. 1 and No. 2 or main and standby.
Reconfiguration	Refers to the electrical reassignment of trunks or channels through switching. Reconfiguration shall occur automatically or be manually initiated from the maintenance console or panel.
Remote	Equipment or actions not located or occurring in a building housing a control facility.

Remoting	Transfer of a local signaling and control at a given control or radio facility to a remote control facility. The remoted control functions would include transmitter keying (PTT), receiver muting, main/standby radio transmitter/receiver control, transceiver tuning and remote maintenance monitoring and remote certification capability.
Remote Facility	An installation housing all the equipment required to perform specific air/ground communications functions under control of a separately located control facility.
Selective Mode	A single trunk is utilized for a frequency-pair whereby each frequency can be selectively keyed.
Site	Any location where equipment is to be supplied or installed.
Split Mode	Each frequency operates on a dedicated trunk.
Standby	Refers to equipment normally off-line or in a backup status as opposed to equipment normally on-line. May be used simply to differentiate between two redundant pieces of equipment.
Switch	A solid-state device employed to shift equipment electrically from an on-line to off-line status and vice versa; to connect or disconnect transmission paths.
Transmission Line	A 4-wire (transmit and receive) or 2-wire (transmit and receive only) transmission facility which connects a control facility with its associated air-ground site. This facility will have a nominal bandwidth of 300 Hz to 3000 Hz and is either leased from the common carrier or derived from FAA owned and maintained radio microwave systems or local cable systems. This facility is also normally called a trunk.

Transmission Level	The power level at the input and output of the transmission line. This level is normally expressed in the "dbm" (decibels above or below a referenced power level of 1 milliwatt into a 600 ohm load, i.e., 0 dbm = 1 milliwatt into a 600 ohm load. The equation is: (+) dbm = 10 log (power in milliwatts referenced to 1 milliwatt). Therefore, all values of dbm are 'minus' for all values of milliwatts less than one (1) and 'plus' for all values greater than one (1). Table 1 of FAA Order 6470.29 provides conversions of voltage and milliwatt values + dbm levels for quick reference purposes.
Transmitter	Refers to one on-line and one off-line air/ground radio communications transmitter. The two transmitters shall be designated No. 1 and No. 2 or main and standby.
Trunk	The equivalent of an unconditioned four-wire type 3002 telephone trunk, FAA-S-1142a trunk, a dry-pair (metallic pair) GFE trunk, an RML voice channel, a Unity Gain Circuit, or a channel derived from satellite or fiber-optic transmission systems.
Type I	Refers to an air/ground communications remote facility or to the RCE modules typically installed in a remote facility.
Type II	Refers to an air/ground communications control facility or to the RCE modules typically installed in a control facility.
Unit	Refers to any one of several pieces of equipment such as the No. 1 transmitter, or the No. 2 receiver.
Voice	See audio.

APPENDIX B:

RADIO CONTROL EQUIPMENT

COMMON VOICE SWITCHING AND

CONTROL EQUIPMENT

INTERFACE REQUIREMENTS

RCE-540-006

TABLE OF CONTENTS

Paragraph	Title	Page
1.	SCOPE	B-1
1.1	Purpose	B-1
2.	APPLICABLE DOCUMENTS	B-1
2.1	FAA Specifications	B-1
2.2	Other FAA Documents	B-3
2.3	Other Documents	B-3
3.	REQUIREMENTS	B-3
3.1	General Requirements	B-3
3.2	Specific IIB1 Module Requirements	B-3
3.2.1	Interface with Four Channel Equipment	B-4
3.2.2	Interface with ICSS Equipment	B-4
3.2.3	Audio Signal Requirements	B-4
3.2.4	Control Signal Requirements	B-5

LIST OF ILLUSTRATIONS

		Page
FIGURE 3-1:	EXAMPLE OF ICSS/RCE INTERFACE ADAPTATION	B-8

LIST OF TABLES

TABLE 1-1:	RCE FUNCTIONAL INTERFACE PARAMETERS WITH FOUR-CHANNEL, ICSS AND VSCS EQUIPMENT	B-2
TABLE 3-1:	VOICE TRANSMIT	B-6
TABLE 3-2:	VOICE RECEIVE	B-7
TABLE 3-3:	PUSH-TO-TALK	B-11
TABLE 3-4:	PUSH-TO-TALK CONFIRMATION	B-13
TABLE 3-5:	MAIN/STANDBY TRANSMITTER SELECTION	B-14
TABLE 3-6:	MAIN/STANDBY RECEIVER SELECTION	B-15
TABLE 3-7:	MAIN/STANDBY TRANSMITTER SELECTION CONFIRMATION	B-16
TABLE 3-8:	MAIN/STANDBY RECEIVER SELECTION CONFIRMATION	B-17
TABLE 3-9:	REMOTE RECEIVER MUTING	B-18
TABLE 3-10:	REMOTE RECEIVER MUTING CONFIRMATION	B-19
TABLE 3-11:	TRUNK LOCKOUT	B-20
TABLE 3-12:	RECEIVER SQUELCH BREAK	B-21
TABLE 3-13:	RECEIVER AGC VOLTAGE	B-22
TABLE 3-14:	TRANSCEIVER TUNING CONTROL	B-23
TABLE 3-15:	TRANSCEIVER TUNING CONFIRMATION	B-24

1. SCOPE - This document defines the requirements for a Common Voice Switching and Control Equipment Interface module (Common IIB1 module). This module, as part of the Radio Control Equipment (RCE) set of modules, will be capable of interfacing with the Integrated Communications Switching System (ICSS), the Four-Channel Radio Equipment, the Voice Switching and Control System (VSCS), and the Tower Communication System (TCS) without the need for external adapters. These requirements are presented on a function by function basis at the common IIB1 module interfaces with the voice switching and control equipment. VSCS and TCS interfaces with RCE are defined in NAS-IRD-41024201 and NAS-IR-41024202 respectively. However IIB1 module interface requirements to these systems are addresses in this document.

1.1 Purpose - The purpose of this document is to define and describe the common IIB1 module requirements at a level of detail consistent with the RCE Specification. It is intended to provide specific requirements for the common IIB1 module without modifying the overall performance and functional design requirements of the IIB1 module specified in FAA-E-2738A.

2. APPLICABLE DOCUMENTS

The following FAA specifications have been used to develop and support the common IIB1 module interface requirements specified in this document.

2.1 FAA Specifications

FAA-E-2738A	Radio Control Equipment (RCE), November 17, 1988
FAA-E-2767	Integrated Communications Switching System (ICSS), September 19, 1985.

TABLE 1-1

RCE FUNCTIONAL INTERFACE PARAMETERS WITH FOUR CHANNEL AND ICSS

FUNCTION		FOUR-CHANNEL	ICSS
Transmit Audio	Level	0 dBm +/- 1.5 dB	Same (Note 1)
	Impedance	600 +/- 60 ohms	Same (Note 1)
Receive Audio	Level	0 dBm +/- 1.5 dB	Same (Note 2)
	Impedance	600 +/- 60 ohms	Same (Note 2)
PTT		Contact	Contact (Note 1)
PTT Confirmation		Voltage	Voltage
M/S Transmitter Selection		Contact	Contact
M/S Receiver Selection		Contact	Contact
M/S TX Confirmation		Voltage	Voltage
M/S RCVR Confirmation		Voltage	Voltage
RX Remote Muting		Contact	Voltage
RX Remote Muting Confirmation		Voltage	Voltage
Trunk Lock-Out		Voltage	Voltage
RX Squelch Break Indicator		Voltage	Voltage
RX AGC Voltage		Voltage	Voltage
Transceiver Tuning		Voltage	Voltage
Transceiver Tuning Confirmation		Voltage	Voltage

NOTES:

1. Dual input ports in the IIB1 module are required for main and standby transmit audio and PTT signals from the ICSS.

2. Dual output port in the IIB1 module are required for main and standby receive audio signals to the ICSS.

2.2 Other FAA Documents -

FAA-Order 6630.4	En Route Communication Installation Standards Handbook
FAA-Order 6630.5	Terminal Communications Installation Standards Handbook
NAS-IR-41024201	VSCS\RCE Interface Reaquirements Document
NAS-IR-41024202	TCS\RCE Interface Requirements Document

2.3 Other Documents -

Instruction Manual main-standby selector module Model SM-8RC (M/S), IM-1990, GRM Corporation, May 1979.

Sonicraft Final Site Survey Report completed under FAA Contract Number DTFA01-84-Y-01045.

3. REQUIREMENTS

3.1 General Requirements - The common IIB1 module (designated IIB1 module hereafter) shall be designed and constructed to ensure compliance with the RCE functional and performance requirements contained in the RCE Specification (FAA-E-2738A). These requirements include operational and maintenance and recovery functions, reliability, maintainability, physical characteristics (including modularity), transportability, and environmental conditions (including EMI). The specific functional features and electrical characteristics necessary to provide the IIB1 module with the capability to interface with the ICSS or the four-channel equipment are defined in this document. VSCS and TCS general requirements are contained in this document. Specific RCE interface requirements to the VSCS and TCS are contained in NAS-IR-41024201 and NAS-IR-41024202 respectively.

3.2 Specific IIB Module Requirements - The IIB1 modules shall provide the functional interfaces between the voice switching and control system. Interfaces with the voice switching and control system's radio position electronic equipment shall be as specified in Tables 3-1 through 3-15. The IIB1 modules shall interface with four types of radio position electronic equipment; i.e., four channel and solid state equipment presently installed at en route and terminal control facilities, ICSS which will be installed at AFSSs and terminal facilities replacing existing equipment, the TCS at Air Traffic Control Towers, and the future VSCS equipment which will be installed at en route and Regional TRACON facilities as a future replacement of the present four channel equipment. The IIB1 module shall provide the logical and electrical conversions to and from these equipments based on the functional and electrical

characteristics required at the IIB2 module interfaces as specified in FAA-E-2738A. The engineering models of the radio position electronic equipment to be fabricated by the contractor for the factory testbed in accordance with 3.11 of FAA-E-2738A shall be used to test and evaluate the IIB1 module/position equipment interface functions and specific logical designs required to provide and respond to the specified IIB2 voice and signal/control interface requirements. The IIB1 module designed to interface with each type of position equipment shall be interchangeable with those at any other facility in which that type of radio position electronic equipment is installed.

3.2.1 Interface with Four Channel Equipment - The IIB1 module shall be designed to interface with the relay panels associated with the existing four channel equipment. Interface functions and electrical characteristics to and from the relay panels for each frequency shall be in accordance with Tables 3-1 through 3-15. The IIB1 module shall contain amplifiers and attenuators as required to provide the appropriate input/output audio levels based on the IIB2 module interface characteristics specified in FAA-E-2738A. It also shall contain the required logic to convert the output/input control signals from and to the four channel relay panels as required to satisfy the standard IIB1 input/output control signal interfaces with the IIB2 modules.

3.2.2 Interface with ICSS Equipment - Interface functions and electrical characteristics to and from the ICSS radio position equipment for each frequency shall be in accordance with Tables 3-1 through 3-15. The conversion equipment in the IIB1 module required to provide standard interface levels towards the IIB2 module shall correspond to the requirements of 3.2.1 above, as applicable.

3.2.3 Audio Signal Requirements - The audio (voice) signal characteristics at the RCE interface with voice switching and control equipment (VSCE) are presented in Tables 3-1 and 3-2. In these and subsequent tables, the generic term "VSCE" is used for all the types of position equipment that the RCE will interface including ICSS, VSCS, TCS, Four Channel, and Channel control equipment made by GRM Corporation such as FA-8165, FA-9334, and SM-8RC (M/S)

main/standby selector module. In addition to the impedance and level requirements, Table 3-1 and 3-2 also provide other requirements that the IIB1 module shall satisfy in support of the voice transmit and receive interface characteristics. The majority of these requirements are generated by the need to provide separate main and standby voice transmit and receive interface connections to and from the ICSS. As illustrated in Figure 3-1, a capability is required in the IIB1 interface implementation to provide signal connectivity between the main or standby voice signals and the common interface into the RCE. Control of the main or standby Voice Transmit shall be controlled by the Transmitter Antenna Transfer signal from the ICSS. Similarly, control of the main or standby Voice Receive shall be controlled by the Receiver Antenna Transfer signal. The IIB1 module shall provide the capability to either bypass the main/standby voice combining or separating feature, as applicable, or to latch it in one state when the common IIB1 module is used in facilities not involving ICSS. Non-selected paths shall be terminated in an appropriate resistive load to minimize intrusion of noise. Circuitry for performing the main/standby voice/transmit selection shall be located on the RCE side of the impedance matching transformers located in the IIB1 module. Loading shall be adequate to support the level regulation requirements of both the RCE and ICSS during the transition as well as during steady state operation.

3.2.4 Control Signal Requirements - Tables 3-3 through 3-15 state, on a Function by function basis, the specific requirements at the RCE interface with the VSCE for the control signals to and from the IIB1 module. For each function, the requirements that the IIB1 module must satisfy in support of the functional interface characteristics are provided.

TABLE 3-1

VOICE TRANSMIT

SOURCE: Voice Switching and Control Equipment (VSCE)

DESTINATION: IIB1 Module

INPUT IMPEDANCE: 600 ohms, transformer coupled (provided by the IIB1 module) reference. The minimum return loss shall be as follows:

Frequency	Return loss
300 - 800	>=21 dB
800 - 2500	>=24 dB
2500 - 3000	>=21

Measurement of return loss shall be according to MIL-STD-188-100, dated 15 Nov 1972, paragraph 40.3.10.

INPUT LEVEL: -5 to 0 dBm (from the VSCE)

OTHER IIB1 MODULE REQUIREMENTS:

a. Provide 10 megohm (minimum) ground isolation.

b. Provide adequate loading to support level regulation requirements.

c. Provide dual input ports for main and standby audio signals (from the ICSS).

d. Provide means to convert (or combine) separate main or standby interfaces into one voice transmit interface with the IIB2 module (as specified in FAA-E-2738A).

e. Provide proper terminations for non-selected paths.

f. Main or standby connectivities shall be established within 50 ms after main/standby transmitter select function is activated.

g. Provide means to bypass the combining feature or to latch it in one (main or standby) state for operations not involving ICSS.

h. Main/standby connectivities shall be controlled by the main/standby transmitter antenna transfer (from the ICSS).

TABLE 3-2

VOICE RECEIVE

SOURCE: IIB1 Module

DESTINATION: VSCE OUTPUT

IMPEDANCE: 600 ohm , transformer coupled, reference. The minimum return loss shall be as follows:

Frequency	Return loss
300 - 800	>-21 dB
800 - 2500	>-24 dB
2500 - 3000	>-21 dB

Measurement of return loss shall be according to MIL-STD-188-100, dated 15 Nov 1972, paragraph 40.3.10.

OUTPUT LEVEL: 0 dBm +/- 1.5 dB (nominal)

OTHER IIB1 MODULE REQUIREMENTS:

a. Provide 10 megohm (minimum) ground isolation.

b. Provide adequate loading to support level regulation requirements.

c. Provide dual output ports for main and standby audio signals (to the ICSS).

d. Provide means to separate single receive audio interface with the IIB2 module (as specified in FAA-E-2738A) into main or standby receive audio for use with ICSS equipment.

e. Provide proper terminations for non-selected paths.

f. Main or standby connectivities shall be established within 50 ms after main/standby receiver select function is activated.

g. Provide means to bypass separating feature or to latch it in one (main or standby) state for operations not involving ICSS.

h. Main/standby connectivities shall be controlled by the main/standby receiver antenna transfer (from the ICSS).

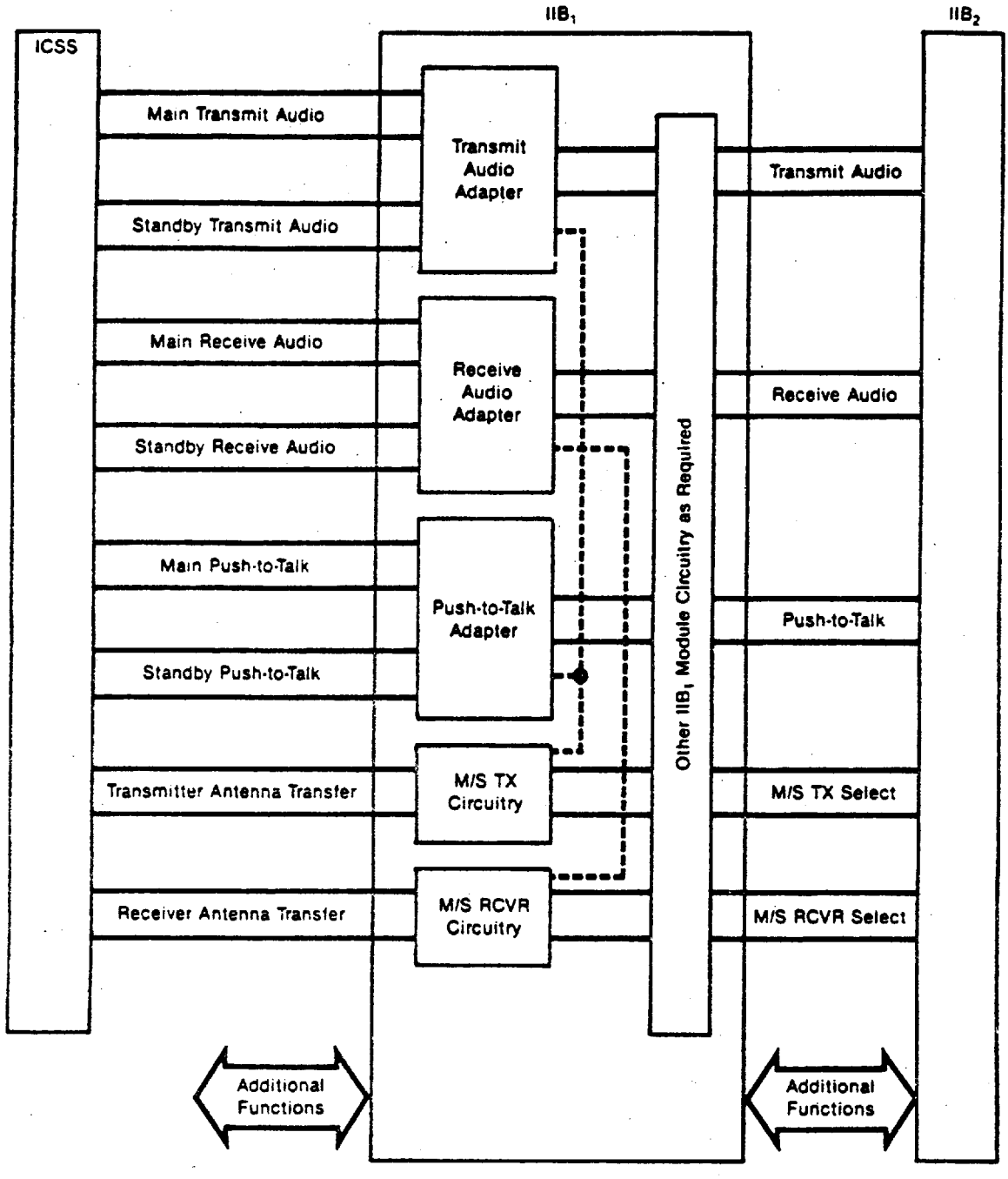

FIGURE 3-1
EXAMPLE OF ICSS/RCE INTERFACE ADAPTATION

The IIB1 module design shall incorporate the capability to operate with either voltage or contact closure signals provided by the VSCE for 1) PTT, 2) main/standby transmitter selection and 3) main/standby receiver selection functions. The IIB1 module shall provide the means to combine separate main or standby PTT interfaces provided by the ICSS into one interface connectivity with the IIB2 module. This requirement is illustrated in Figure 3-1.

The IIB1 module design shall include the capability to either bypass the combining feature or to latch it in one state when the module is used in installations not involving ICSS.

Since the PTT, remote receiver muting and main/standby commands may be derived from contact closures, means shall be provided to avoid detrimental effects caused by contact operation. Debounce circuitry as required by the implementation used, shall be employed to avoid multiple activations. Suitable filtering shall be provided to control impulse noise.

In addition the IIB1 module shall provide two signal options for 1) PTT confirmation, 2) main/standby transmitter selection confirmation and 3) main/standby receiver selection confirmation functions. Option 1 consists of a balanced differential voltage output (two wire interface) with the positive and negative voltage ranges given in the corresponding tables to indicate the state of the confirmation function. Option 2 consists of a positive voltage (+5 VDC, nominal) to indicate standby selection confirmation or 0 VDC (nominal) to indicate main selection confirmation.

In order to satisfy option 2 for the confirmation functions, the IIB1 module shall also provide the means, including external pins and appropriate circuit protection, to drive indicator lamps in the SM-8RC (M/S) main-standby selector module.

The trunk lockout, receiver squelch break, receiver AGC voltage, transceiver tuning control, and tuning confirmation functional requirements are specified in Tables 3-11 through 3-15. The IIB1 module is required to provide the balanced differential voltage output as indicated for trunk lockout, receiver squelch break, and tuning confirmation functions. The IIB1 module shall provide transparent paths for the AGC voltage decoded by the IIB2 module and for the serially encoded transceiver tuning signal originated by the VSCE.

The IIB1 module shall provide ground connectors as required by the contractor design and in accordance with FAA-E-2738A. Similarly, the IIB1 module shall provide the means including alternate external connectors, as necessary, to satisfy the various input/output signal options specified in this document. In addition, the IIB1 module shall provide appropriate protection for interface circuits as required by the contractor's design approach. Other IIB1 module requirements are presented for each function in Tables 3-3 through 3-6. The implementation of these requirements is needed to support the interface signal requirements specified in the tables.

TABLE 3-3

PUSH-TO-TALK

SOURCE: VSCE

DESTINATION: IIB1 Module

INPUT SIGNAL REQUIREMENTS:

	Option 1 (VSCS, TCS)	Option 2 (Four-Channel, ICSS)
PTT Activated	+2 to +6 VDC	- contact closed - contact and wire resistance 25 ohms or less - maximum contact current 100 mA
PTT Released	-6 to -2 VDC	- contact open - 10 megohm minimum resistance between terminals

OTHER IIB1 MODULE REQUIREMENTS:

a. Provide means within the same module to accept option 1 and 2 parameters and the logical and electrical conversion for interface compatibility with IIB2 module in accordance with FAA-E-2738A, Table 10.

b. Provide dual input ports for main and standby PTT signals (from the ICSS).

c. Provide means to convert (combine) separate main or standby interface into one PTT interface with the IIB2 module (as specified in FAA-E-2738A, Table 10).

d. Main or standby connectivities shall be established within 50ms after main/standby transmitter select function is activated.

e. Provide proper terminations for non-selected paths as required.

f. Provide means to avoid detrimental effects caused by contacts.

TABLE 3-3
(Concluded)

PUSH-TO-TALK

g. Provide means to bypass the combining feature or to latch it in one (main or standby) state for operations not involving ICSS.

h. Main/standby connectivities shall be controlled by the main/standby transmitter antenna transfer (from the ICSS).

i. Provide external pins as required for appropriate interface connections.

j. Use of submodules or internal strapping to satisfy options shall not be permitted unless otherwise approved by the FAA.

k. For Option 1:

   1. A balanced differential voltage input (two wire interface) is required.

   2. The IIB1 module shall provide a load impedance (line to line) of 4 K ohms or greater and a minimum line to ground impedance of 10 times the load impedance.

   3. Transmission time between signal states will be within the range of 10 to 100 microseconds.

TABLE 3-4

PUSH-TO-TALK CONFIRMATION

SOURCE: IIB1 Module

DESTINATION: VSCE

OUTPUT SIGNAL REQUIREMENTS:

	Option 1 (VSCS, ICSS, TCS)	Option 2 (SM-8RC)
PTT Confirmation	+2 to +6 VDC	+5 +/-0.5 VDC Maximum current 200 mA
PTT Release Confirmation	-6 to -2 VDC	0 +/- 0.5 VDC

OTHER IIB1 MODULE REQUIREMENTS:

a. Means within the same module to provide option 1 and 2 parameters including external pins as required for interface connections. The use of submodules or internal strapping to satisfy options shall not be permitted unless otherwise approved by the FAA.

b. For option 1, the IIB1 module shall provide a balanced differential voltage output (two+ wire interface) and short circuit protection. The transition time between signal states shall be within the range of 10 to 100 microseconds. The VSCE will provide a load impedance (line to line) of 4 K ohms or greater and a minimum line to ground impedance of 10 times the load impedance.

c .For option 2, the IIB1 module shall provide sufficient power (1.0W, nominal) to drive the key indicator lamp in the SM-8RC (M/S) main standby selector module. The IIB1 module shall also provide short circuit protection.

TABLE 3-5

MAIN/STANDBY TRANSMITTER SELECTION

SOURCE: VSCE

DESTINATION: IIB1 Module

INPUT SIGNAL REQUIREMENTS:

	Option 1 (VSCS,TCS)	Option 2 (Four-Channel, ICSS, SM-8RC)
Main Transmitter	-6 to -2 VDC	- contact open - 10 Megohm minimum resistance between terminals
Standby Transmitter	+2 to +6 VDC	- contact closed - contact and wire resistance 25 ohms or less - maximum contact current 100 mA

OTHER IIB1 MODULE REQUIREMENTS:

a. Provide means within the same module to accept option 1 and 2 parameters and the logical and electrical conversion for interface compatibility with IIB2 module in accordance with FAA-E-2738A, Table 10.

b. Provide means to avoid detrimental effects caused by contacts.

c. Provide external pins as required for appropriate interface connections.

d. Use of submodules or internal strapping to satisfy options shall not be permitted unless otherwise approved by the FAA.

e. For option 1, a balanced differential voltage input (two wire interface) is required. The IIB1 module shall provide a load impedance (line to line) of 4 K ohms or greater and a minimum line to ground impedance of 10 times the load impedance. Transition time between signal states will be within the range of 10 to 100 microseconds.

TABLE 3-6

MAIN/STANDBY RECEIVER SELECTION

SOURCE: VSCE

DESTINATION: IIB1 Module

INPUT SIGNAL REQUIREMENTS:	Option 1 (VSCS,TCS)	Option 2 (Four-Channel, ICSS, SM-8RC)
Main Receiver	-6 to -2 VDC	- contact open - 10 Megohm minimum resistance between terminals
Standby Receiver	+2 to +6 VDC	- contact closed - contact and wire resistance 25 ohms or less - maximum contact current 100 mA

OTHER IIB1 MODULE REQUIREMENTS:

a. Provide means within the same module to accept option 1 and 2 parameters and the logical and electrical conversion for interface compatibility with IIB2 module in accordance with FAA-E-2738A, Table 10.

b. Provide means to avoid detrimental effects caused by contacts.

c. Provide external pins as required for appropriate interface connections.

d. Use of submodules or internal strapping to satisfy options shall not be permitted unless otherwise approved by the FAA.

e. For option 1, a balanced differential voltage input (two wire interface) is required. The IIB1 module shall provide a load impedance (line to line) of 4 K ohms or greater and a minimum line to ground impedance of 10 times the load impedance. Transition time between signal states will be within the range of 10 to 100 microseconds.

TABLE 3-7

MAIN/STANDBY TRANSMITTER SELECTION CONFIRMATION

SOURCE: IIB1 MODULE

DESTINATION: VSCE

INPUT SIGNAL REQUIREMENTS:

	Option 1 (VSCS,ICSS,TCS)	Option 2 (SM-8RC)
Main Confirmation	-6 to -2 VDC	0 +/- 0.5 VDC
Standby Confirmation	+2 to +6 VDC	+5 +/- 0.5 VDC maximum current 200 mA

OTHER IIB1 MODULE REQUIREMENTS:

a. Means within the same module to provide option 1 and 2 parameters including external pins as required for interface connections. The use of submodules or internal strapping to satisfy options shall not be permitted unless otherwise approved by the FAA.

b. For option 1, the IIB1 module shall provide a differential voltage output (two wire interface) and short circuit protection. The transiltion time between signal states shall be within the range of 10 to 100 microseconds. The VSCE will provide a load impedance (line to line) of 4 K ohms or greater and a minimum line to ground impedance of 10 times the Load impedance.

c. For option 2, the IIB1 module shall provide sufficient power (1.0W, nominal) to drive the appropriate indicator lamp in the SM-8RC (M/S) main/standby selector module. The IIB1 module shall also provide short circuit protection.

TABLE 3-8

MAIN/STANDBY RECEIVER SELECTION CONFIRMATION

SOURCE: IIB1 Module

DESTINATION: VSCE

OUTPUT REQUIREMENTS:	Option 1 (VSCS,ICSS,TCS)	Option 2 (SM-8RC)
Main Confirmation	-6 to -2 VDC	0 +/- 0.5 VDC
Standby Confirmation	+2 to +6 VDC	+5 +/- 0.5 VDC maximum current 200 mA

OTHER IIB1 MODULE REQUIREMENTS:

a. Means within the same module to provide option 1 and 2 parameters including external pins as required for interface connections. The use of submodules or internal strapping to satisfy options shall not be permitted unless otherwise approved by the FAA.

b. For option 1, the IIB1 module shall provide a balanced differential voltage output (two wire interface) and short circuit protection. The transition time between signal states shall be within the range of 10 to 100 microseconds. The VSCE will provide a load impedance (line to line) of 4 K ohms or greater and a minimum line to ground impedance of 10 times the load impedance.

c. For option 2, the IIB1 module shall provide sufficient power (1.0W, nominal) to drive the appropriate indicator lamp in the SM-8RC (M/S) main/standby selector module. The IIB1 module shall also provide short circuit protection.

TABLE 3-9

REMOTE RECEIVER MUTING

SOURCE:	VSCE
DESTINATION:	IIB1 Module
INPUT SIGNAL REQUIREMENTS:	
Mute	+2 to +6 VDC
Unmute	-6 to -2 VDC

OTHER IIB1 MODULE REQUIREMENTS:

a. Provide the logical and electrical conversion for interface compatibility with the IIB2 module in accordance FAA-E-2738A Table 10.

b. The IIB1 module shall provide a balanced differential voltage output (two wire interface).

c. Transition time between signal states shall be within the range of 10 to 100 microseconds.

d. The IIB1 module shall provide short circuit protection on the differential output. The VSCE will provide a load impedance (line to line) of 4K ohms or greater and a minimum line to ground impedance of 10 times the load impedance.

TABLE 3-10

REMOTE RECEIVER MUTING CONFIRMATION

SOURCE:	IIB1 Module
DESTINATION:	VSCE
OUTPUT SIGNAL REQUIREMENTS:	
Mute Confirmation	+2 to +6 VDC
Unmute Confirmation	-6 to -2 VDC

OTHER IIB1 MODULE REQUIREMENTS:

a. The IIB1 module shall provide a balanced differential voltage output (two wire interface).

b. Transition time between signal states shall be within the range of 10 to 100 microseconds.

c. The IIB1 module shall provide short circuit protection on the differential output. The VSCE will provide a load impedance (line to line) of 4K ohms or greater and a minimum line to ground impedance of 10 times the load impedance.

TABLE 3-11

TRUNK LOCKOUT

SOURCE:	IIB1 Module
DESTINATION:	VSCE

OUTPUT SIGNAL REQUIREMENTS:

Trunk Lockout Activated	+2 to +6 VDC
Trunk Lockout Released	-6 to -2 VDC

OTHER IIB1 MODULE REQUIREMENTS:

a. The IIB1 module shall provide a balanced differential voltage output (two wire interface).

b. The transition time between signal states shall be within the range of 10 to 100 microseconds.

c. The IIB1 module shall provide short circuit protection on the differential output. The VSCE will provide a load impedance (line to line) of 4 K ohms or greater and a minimum line to ground impedance of 10 times the load impedance.

TABLE 3-12

RECEIVER SQUELCH BREAK

SOURCE:	IIB1 Module
DESTINATION:	VSCE
OUTPUT SIGNAL REQUIREMENTS:	
Receiver unsquelched (squelch break)	+2 to +6 VDC
Receiver squelched	-6 to -2 VDC

OTHER IIB1 MODULE REQUIREMENTS:

a. The IIB1 module shall provide a balanced differential voltage output (two wire interface).

b. The transition time between signal states shall be within the range of 10 to 100 microseconds.

c. The IIB1 module shall provide short circuit protection on the differential output. The VSCE will provide a load impedance (line to line) of 4 K ohms or greater and a minimum line to ground impedance of 10 times the load impedance.

TABLE 3-13

RECEIVER AGC VOLTAGE

SOURCE: IIB1 Module

DESTINATION: VSCE

OUTPUT SIGNAL REQUIREMENTS:

Maximum Voltage	+10.0 VDC
Minimum Voltage	0.0 VDC

OTHER IIB1 MODULE REQUIREMENTS:

a. The IIB1 module shall provide a two wire interface with the VSCE.

b. The IIB1 module shall provide at the RCE/VSCE interface the receiver AGC voltage as decoded by the IIB2 module in steps of 0.1 VDC.

c. The VSCE will provide a load impedance of 100 K ohms or greater.

TABLE 3-14

TRANSCEIVER TUNING CONTROL

SOURCE: VSCE

DESTINATION: IIB1 Module

INPUT SIGNAL REQUIREMENTS:

Tuning Signal	Serially encoded asynchronous message at 9600 baud
Logical 1 or Positive State	+2 to +6 VDC
Logical 0 or Negative State	-6 to -2 VDC

OTHER IIB1 MODULE REQUIREMENTS:

a. A balanced differential voltage input (two wire interface) is required.

b. The IIB1 module shall provide a load impedance (line to line) of 4 K ohms or greater and a minimum line to ground impedance of 10 times the load impedance.

c. The IIB1 interface shall accept tuning control signals from the VSCE in accordance with the requirements of NAS-IR-41024201.

TABLE 3-15

TRANSCEIVER TUNING CONFIRMATION

SOURCE:	IIB1 Module
DESTINATION:	VSCE
INPUT SIGNAL REQUIREMENTS:	
Transceiver Ready (Tuning Complete)	-6 to -2 VDC
Transceiver Not Ready	+2 to +6 VDC

OTHER IIB1 MODULE REQUIREMENTS:

a. The IIB1 module shall provide a balanced differential voltage output (two wire interface).

b. The transition time between signal states shall be within the range of 10 to 100 microseconds.

c. The IIB1 module shall provide short circuit protection on the differential output. The VSCE will provide a load impedance (line to line) of 4 K ohms or greater and a minimum line to ground impedance of 10 times the load impedance.

d. The IIB1 module shall provide tuning confirmation signals to the VSCE in accordance with requirements of NAS-IR-41024201.

APPENDIX C:

RADIO CONTROL EQUIPMENT

SOLID-STATE RADIO EQUIPMENT

INTERFACE REQUIREMENTS

RCE-540-001

TABLE OF CONTENTS

Paragraph	Title	Page
1.	SCOPE	C-1
1.1	Organization	C-1
2.0	RADIO EQUIPMENT OVERVIEW	C-2
2.1	Existing Radio Equipment	C-2
3.0	INTERFACE LOCATION	C-6
3.1	Interface Boundary Constraints	C-6
3.2	Physical Location	C-7
4.0	INTERFACE CHARACTERISTICS	C-7
4.1	Mechanical Characteristics	C-7
4.2	Electrical Characteristics	C-12
5.0	RADIO EQUIPMENT MODIFICATIONS	C-34
5.1	Main/Standby Transmitter/Receiver Transfer	C-34
5.2	Receiver Squelch Break	C-34
5.3	AGC Voltage	C-34
5.4	Transceiver Tuning	C-34
5.5	Transmitter and Receiver DC Power	C-35

LIST OF TABLES

		Page
TABLE 1-1	TYPICAL CONTROL, SIGNALLING, AND RADIO EQUIPMENT AT REMOTE FACILITIES (PARTIAL LISTING)	C-4
TABLE 4-1	SOLID STATE RADIO EQUIPMENT INTERFACE ACCESS POINTS	C-13
TABLE 4-2	AUDIO TRANSMIT (MAIN)	C-15
TABLE 4-3	AUDIO TRANSMIT (STANDBY)	C-16
TABLE 4-4	AUDIO RECEIVE (MAIN)	C-17
TABLE 4-5	AUDIO RECEIVE (STANDBY)	C-18
TABLE 4-6	TRANSMITTER KEYING (MAIN)	C-19
TABLE 4-7	TRANSMITTER KEYING (STANDBY)	C-21
TABLE 4-8	KEYING (PTT) CONFIRMATION (MAIN)	C-23
TABLE 4-9	KEYING (PTT) CONFIRMATION (STANDBY)	C-24
TABLE 4-10	MAIN/STANDBY TRANSMITTER TRANSFER	C-25
TABLE 4-11	MAIN/STANDBY RECEIVER TRANSFER	C-27
TABLE 4-12	SQUELCH BREAK (MAIN RECEIVER)	C-28
TABLE 4-13	SQUELCH BREAK (STANDBY RECEIVER)	C-29
TABLE 4-14	AGC VOLTAGE (MAIN RECEIVER)	C-30
TABLE 4-15	AGC VOLTAGE (STANDBY RECEIVER)	C-31
TABLE 4-16	TRANSCEIVER TUNING CONTROL	C-32
TABLE 4-17	TRANSCEIVER READY/NOT READY	C-33

LIST OF ILLUSTRATIONS

FIGURE 1-1	TYPICAL A-G COMMUNICATIONS SYSTEM	C-3
FIGURE 3-1	RCE/SOLID STATE RADIO EQUIPMENT INTERFACE	C-8
FIGURE 3-2	TYPICAL REMOTE A-G COMMUNICATIONS FACILITY	C-9
FIGURE 3-3	TYPICAL RACK LAYOUT AT REMOTE COMMUNICATIONS SITES	C-10
FIGURE 4-1	TYPICAL TERMINAL STRIP PER FREQUENCY	C-11

1.0 SCOPE - This document describes the electrical/electronic interfaces between the solid state radio equipment at existing three types of Federal Aviation Administration (FAA) remote air-ground communication facilities: 1) Remote Communications Air-Ground (RCAG), 2) Remote Communication Outlet (RCO), and 3) Remote Transmitter/Receiver (RTR) facilities and the Radio Control Equipment (RCE). Interfaces addressed in this document will ensure electrical compatibility and successful operation of the RCE with the solid state radio equipment.

1.1 Organization - Sections 1 and 2 of this document provide background material; sections 3 through 5 identify specific solid state radio equipment/RCE interface requirements. The specific content of each section is described below.

Section 1 states the scope of this document and provides an overview of the existing radio equipment and the RCE.

Section 2 contains description of the existing radio equipment environment.

Section 3 identifies the location of the interface between the solid state radio equipment and the RCE.

Section 4 describes the mechanical and electrical interface characteristics and provides detailed connection requirements for the solid state radio equipment at the interface boundary.

Section 5 identifies specific modifications needed to provide compatibility between the radio equipment and the RCE.

2.0 Radio Equipment Overview - The following paragraphs provide a brief overview of the existing radio equipment.

2.1 Existing Radio Equipment - Existing equipment at RCAG, RCO, and RTR facilities consist of main and standby transmitters and receivers, antenna subsystems including antenna transfer coaxial relay and RF bodies, power supplies, and the complementary remote units of the voice frequency signalling system (VFSS) employed at Air Route Traffic Control Centers (ARTCCs), Terminal Radar Approach Control (TRACON) facilities, and Flight Service Stations (FSSs). Diesel engine generators are provided in a number of remote facilities to supply backup power in the event the primary AC power source is lost. Figure 1-1 shows a simplified block diagram of typical A-G communications equipment located at an ARTCC and an RCAG.

Signalling equipment, VHF/UHF transmitters, VHF/UHF receivers, and corresponding power supplies are normally mounted in standard FAA cabinet racks. The crosshatched blocks in Figure 1-1 identify equipment which will be replaced by the RCE.

The A-G communications equipment located at remote facilities currently consists of a substantial number of unit variations. Table 1-1 presents a partial listing of A-G communications equipment at RCAG, RCO, and RTR facilities.

Tone signalling and control components installed at remote sites are the counterparts of the equipment installed at a control facilities. These components include frequency shift (FS) receivers, amplitude modulation (AM) receivers, the voice frequency (VF) remote control relay panel, and the receiver mute unit. Control logic units in existing tone control systems use electro-mechanical or solid state technology. All of this tone control equipment will be replaced by the RCE.

Existing VHF and UHF transmitters and receivers use either vacuum tube or solid state technology. Vacuum tube transmitters and receivers will be replaced by solid state units before installation of RCE. Consequently, only the interface between solid state radio equipment and the RCE will be discussed.

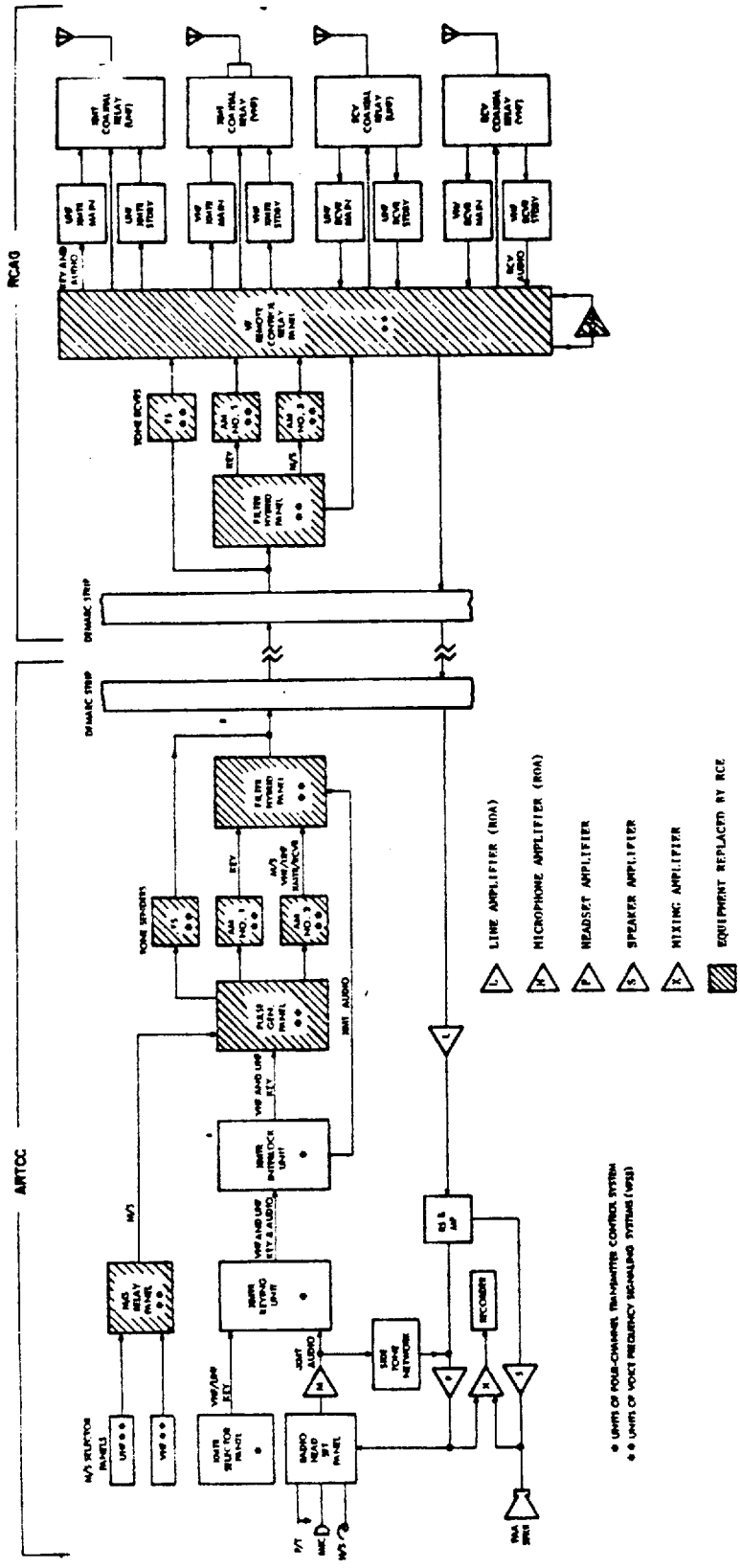

FIGURE 1-1
TYPICAL AIR-GROUND COMMUNICATIONS SYSTEM

TABLE 1-1
TYPICAL CONTROL, SIGNALLING, AND RADIO EQUIPMENT
AT REMOTE FACILITIES (PARTIAL LISTING)

Voice Frequency Control Equipment

CA-1620	FA-5651	FA-8717
FA-5397	FA-8048	CRP-SS4

Voice Frequency Signalling Equipment

CA-1621	FA-8170	FA-8735
CA-1708	FA-8171	VFRC-6
FA-5390	FA-8187	

VHF Receivers

AN/GRR-23	RV-7	RV-12
RV-4	RV-8	RV-12B
RV-5	RV-9	
RV-6	RV-11	

UHF Receivers

AN/GRR-24	R278/GRC-27	R361/GR

VHF Transmitters

T1108/GRT-21	TV-6	TV-36
AN/GRT-21	TV-15	FA-7840
TUQ	TV-35	FA-8711

UHF Transmitters

T1109/GRT-22	T-217/GRC-27	FA-7841
AN/GRT-22	TU-9	FA-8712
AN/GRT-3A (T-282)		

2.1.1 Existing Equipment Functional Capabilities - Existing remote radio control equipment provides the following functional capabilities at the interface with the transmitters and receivers:

1. Push-To-Talk. Solid state radio transmitters can be keyed with a ground or by a DC voltage. Ground keying is currently used. The PTT release function is accomplished by introducing an open circuit (open relay contact) to the transmitter keying input.

2. Audio transmit.

3. Audio receive.

4. Main/Standby (M/S) transmitter/receiver selection. In existing equipment, the audio and keying signals are transferred from the main to the standby unit or vice versa by the VF remote control relay panel. Latching relays are used to keep the main or standby unit connected until a reset signal is received to indicate that a transfer of units is being commanded. In addition, the operation of the antenna transfer relay is interlocked with the main/standby switchover of transmitters and receivers.

5. Remote receiver muting. This function is accomplished, at remote facilities where remote receiver muting is used, by the receiver muting unit under the control of the mute selector switch panel and the selector relay unit located at the control facility. AM transmitters (senders) number 4 and 5 are normally used to mute the UHF and VHF receivers respectively. The unmuted signals from the UHF and VHF receivers are applied directly to the muting unit before reaching the filter hybrid panel. Audio muting is accomplished by switching attenuation networks into the audio receive path.

The existing remote site control equipment does not have the capability to provide all the functions that the RCE will provide; operational capabilities that will be provided by the RCE that are not available in existing systems include the following:

a. PTT confirmation.

b. Main/Standby transmitter confirmation.

c. Main/Standby receiver confirmation.

d. Remote receiver mute confirmation.

e. Remote transceiver tuning.

f. Transceiver tuning confirmation.

3.0 INTERFACE LOCATION - The RCE was designed to replace the existing voice frequency signalling and control equipment used for control of A-G radio communications equipment. At remote A-G communications sites, the RCE will interface with transmission media at the facility demarcation. The RCE will also interface with the solid state radio equipment and remote monitoring sensors and control signals, as described herein and in Appendix D, at the intermediate distribution frame/terminal strip (IDF/TS).

The solid state radio equipment will interface with the RCE through the IB1 interface module. The IB1 module contains the logic required to convert inputs from the solid state radio equipment to a form usable by the RCE; similarly, inputs from the RCE are converted to a form usable by the solid state radio equipment. Functional requirements as well as overall electrical and mechanical characteristics of the IB1 module are described in RCE specification FAA-E-2738A. One IB1 module is required for each frequency at the remote facility.

3.1 Interface Boundary Constraints - The functional boundary between the solid state radio equipment and the RCE is clearly defined. The interface boundary must take into account the constraints imposed by the solid state radio equipment installations in terms of spacing, equipment layout, and accessibility. The following general principles, guidelines, and constraints were observed in defining the interface boundary:

1. Unless otherwise approved by the FAA, modifications to existing solid state radio equipment are not allowed.

2. RCE/solid state radio equipment interface points are located such that existing wiring can be used where feasible to minimize changes to the remaining radio equipment.

3. The interface will be selected such that any required modification or adaptation to existing solid state radio equipment can be implemented with simplicity, at low cost, and without compromising system reliability or safety.

4. Solid state radio transmitters are currently undergoing modification by the addition of an Inboard Monitor/Keyer card A3. It is assumed that this card will be installed prior to interfacing the solid state radio transmitters with the RCE to permit implementation of a positive voltage keying mode of +6 VDC.

5. Unless otherwise specifically identified in this document, nominal electrical parameter values for RCE interface signals shall be as specified in RCE specification FAA-E-2738A.

Figure 3-1 is a block diagram illustrating the solid state radio equipment/RCE interface delimitation.

3.2 Physical Location - Figure 3-2 depicts a typical six-channel remote A-G communications facility and the corresponding cabinet rack location. Figure 3-3 shows a typical rack layout for two complete channels including the control and signalling system equipment. This arrangement generally follows the latest mounting designs, although some differences may exist between facilities with respect to the type and category of equipment installed in individual cabinet racks.

All equipment in A3/B3 racks will be replaced by RCE; thus, this location is a prime candidate for installing the RCE cabinets and associated terminal strips. The terminal strips shall provide the interface between the solid state radio equipment and the RCE.

4.0 INTERFACE CHARACTERISTICS - The implementation of a standard RCE/solid state radio equipment interface is relatively straightforward and will maximize commonality of installation details and ensure functionally compatible RCE/solid state radio equipment interfaces. Adherence to the requirements of this document will maximize interface standardization.

4.1 Mechanical Characteristics - The physical elements of the solid state radio equipment/RCE interface consist of Intermediate Distribution Frame/ Terminal Strips (IDF/TS), special devices needed to implement the interface, and associated ancillary equipment required for cross connections (i.e., jacks, plugs, cables, connecting blocks).

Terminal strips consist of WECO type 66 (or equivalent) connection blocks installed in an FAA-approved cabinet. The quantity of terminal strips installed depends on individual site requirements. Each terminal strip contains 50 rows of dual 2-prong clips of the solderless quick disconnect type. Clips shall be tin lead plated in accordance with Western Electric specification #669A (or equivalent). Clips shall be sprayed with a protective coating after wire termination.

Each terminal strip provides for complete functional cross connections associated with a single frequency (including RMS equipment monitoring functions), pins for interconnecting modification kits , and spare pins to allow for future growth. Figure 4-1 illustrates a typical terminal strip.

The terminal strips define the boundary between the radio equipment and the RCE. All applicable functions to/from the RCE shall be wired to the terminal strip pins designated A and B by the RCE contractor; similarly, all applicable functions to/from the radio equipment will be wired to the terminal strip pins designated C and D by the FAA. Connection between appropriate rows shall be established by the contractor. Bridging clips or jumper wires shall be used for the interconnections. Terminal strip connections for RMS equipment monitoring functions are described in Appendix D of FAA-E-2738A.

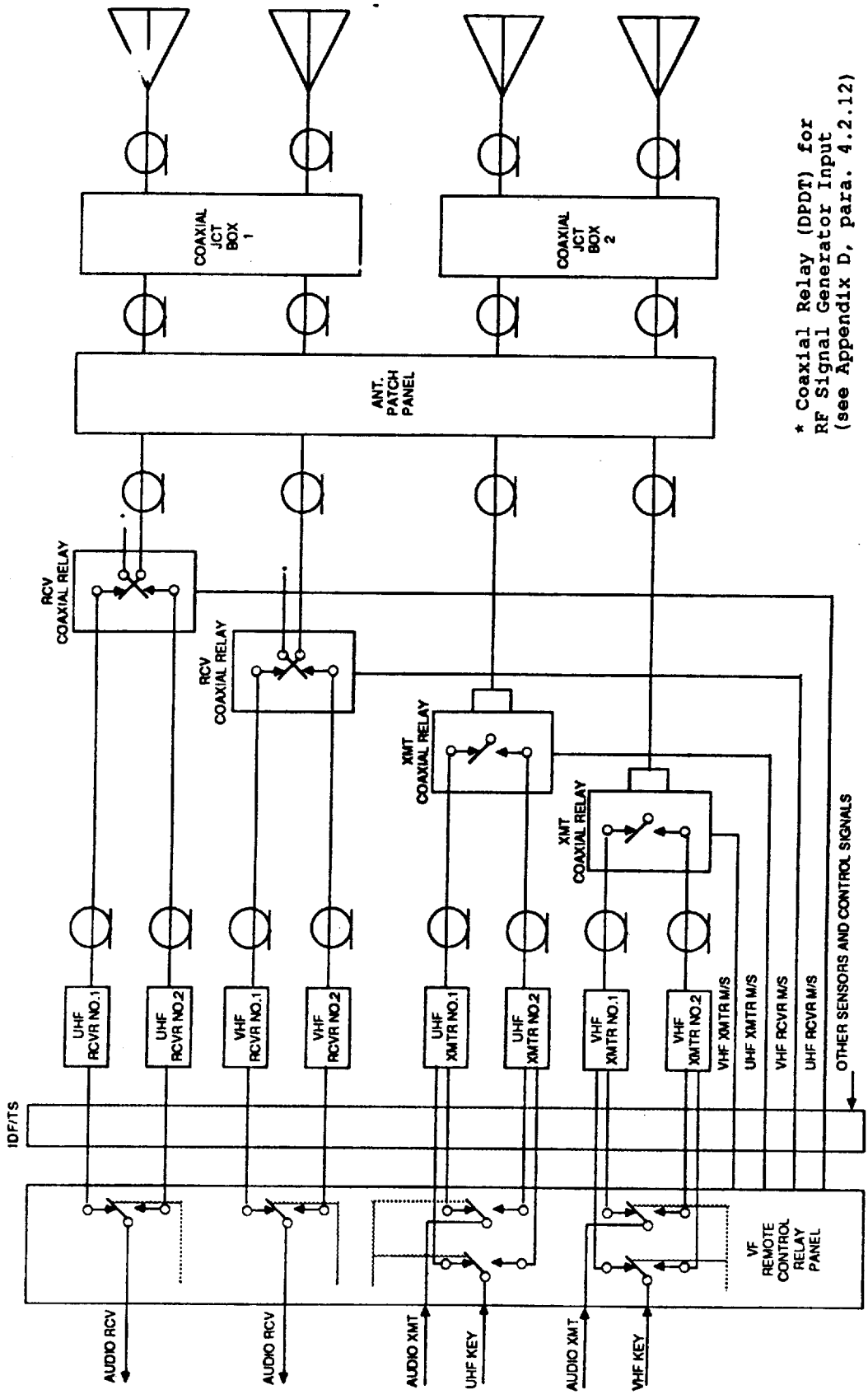

FIGURE 3-1
RCE/SOLID STATE RADIO EQUIPMENT INTERFACE

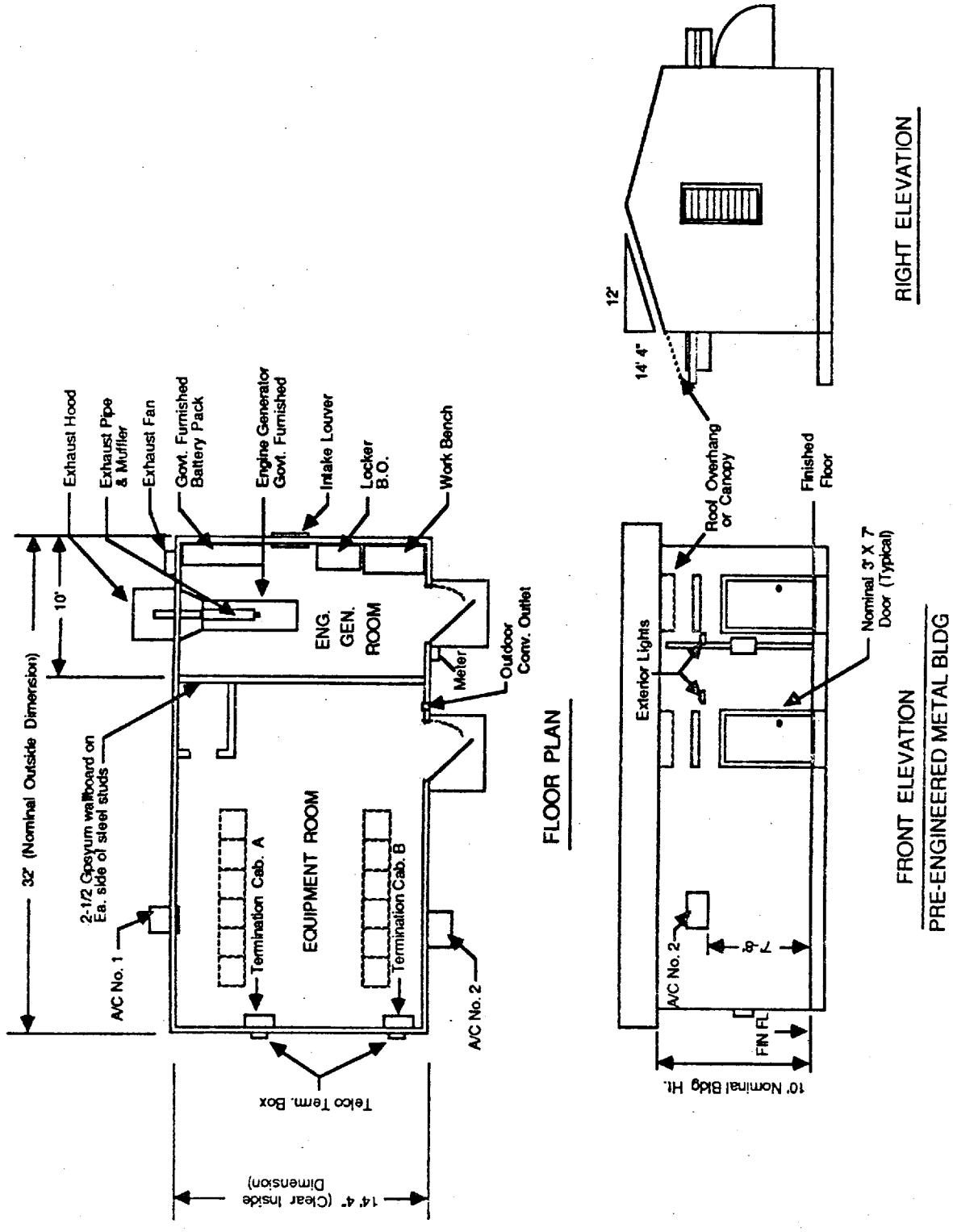

FIGURE 3-2
TYPICAL REMOTE A-G COMMUNICATIONS FACILITY

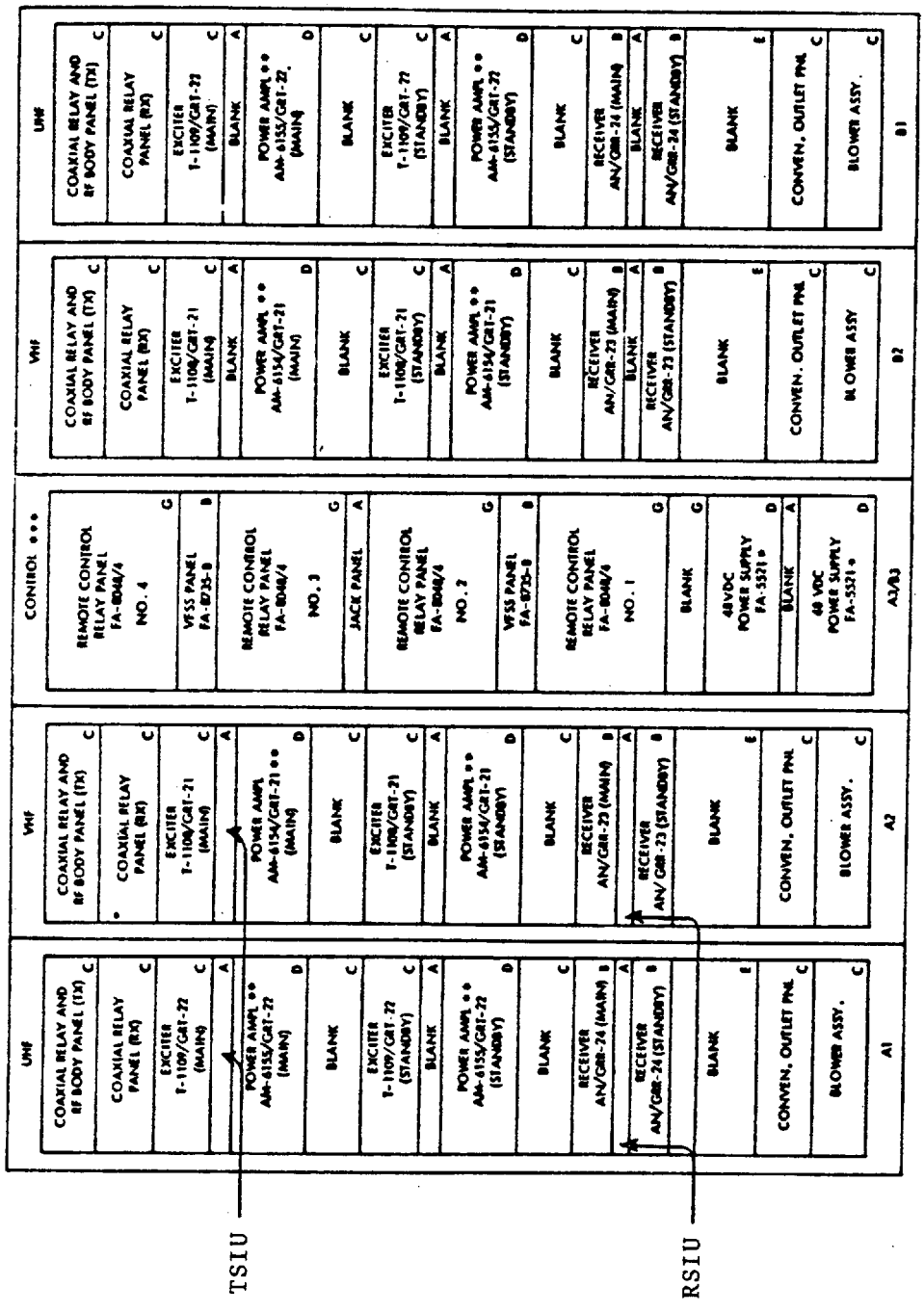

LEGEND:

* OR EQUIVALENT

** ONLY WHERE REQUIRED; OTHERWISE BLANK PANELS

*** COMMON CONTROL RACK FOR 2 VHF/UHF CHANNELS

FIGURE 3-3
TYPICAL RACK LAYOUT AT REMOTE COMMUNICATIONS SITES

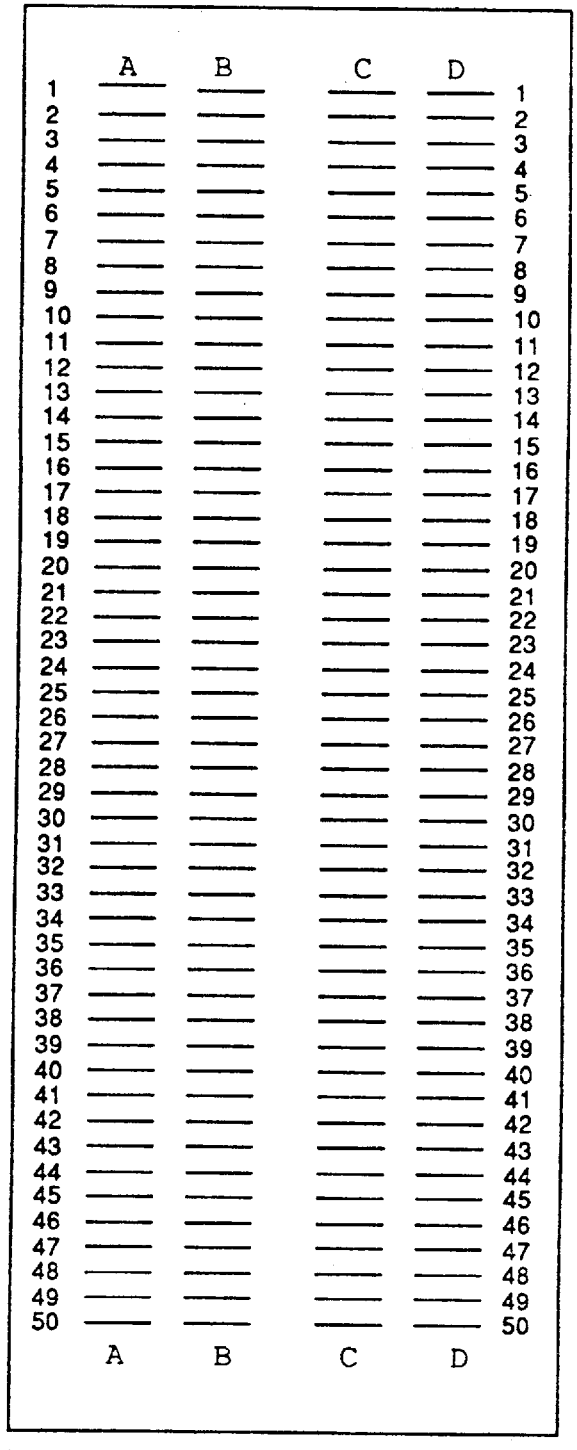

FIGURE 4-1

TYPICAL TERMINAL STRIP PER FREQUENCY

4.2 Electrical Characteristics - Electrical connections to the solid state radio equipment may be established at various locations to access the audio, control, and signalling functions; however, all wiring will terminate at the TSs. Any modification kits required to ensure functional compatibility between the RCE and the solid state radio equipment will be implemented and connected at the solid state radio equipment side of the TSs.

Jack (or plug) pins providing the function of interest for each solid state radio equipment type on a per channel (frequency) basis are identified in Table 4-1. Any discrepancy between the actual pin identification and that identified in this document will be resolved by using the "as built" wiring diagram of the particular facility.

Tables 4-2 through 4-17 provide the interface signal characteristics of each radio equipment function which interfaces with the RCE. The interface signal characteristics of functions whose source is the RCE and which terminate at the TSs but are not interfaced with the solid state radio equipment are also provided.

TABLE 4-1

SOLID STATE RADIO EQUIPMENT INTERFACE ACCESS POINTS

FUNCTION	SOLID STATE EQPT	CONNECTOR PINS
AUDIO TRANSMIT	VHF Transmitter T-1108/GRT-21	#1: J5-F, J5-J (Main) #2: J5-F, J5-J (Standby)
	UHF Transmitter T-1109/GRT-22	#1: J5-F, J5-J (Main) #2: J5-F, J5-J (Standby)
	Alternative Access Relay Panel Type CA-1620 FA-5390 FA-8735	Terminal Board Pin: 31, 32 (Main VHF) 33, 34 (Standby VHF) 23, 24 (Main UHF) 25, 26 (Standby UHF)
AUDIO RECEIVE	VHF Receiver AN/GRR-23	#1: J2-C, J2-D (Main) #2: J2-C, J2-D (Standby)
	UHF Receiver AN/GRR-24	#1: J2-C, J2-D (Main) #2: J2-C, J2-D (Standby)
	Alternative Access Relay Panel Type CA-1620 FA-5390 FA-8735	Terminal Board Pin: 35, 36 (Main VHF) 53, 54 (Standby VHF) 27, 28 (Main UHF) 29, 30 (Standby UHF)
PUSH-TO-TALK	VHF Transmitter T-1108/GRT-21	#1: J5-A, J5-N (Main) #2: J5-A, J5-N (Standby)
	UHF Transmitter T-1109/GRT-22	#1: J5-A, J5-N (Main) #2: J5-A, J5-N (Standby)
	Alternative Access Relay Panel Type CA-1620 FA-5390 FA-8735	Terminal Board Pin: 45, 46 (Main VHF) 47, 48 (Standby VHF) 37, 38 (Main UHF) 39, 40 (Standby UHF)

TABLE 4-1

SOLID STATE RADIO EQUIPMENT INTERFACE ACCESS POINTS (Concluded)

FUNCTION	SOLID STATE EQPT	CONNECTOR PINS
SQUELCH BREAK	VHF Receiver AN/GRR-23	To be established in accordance with modification kit implemented
	UHF Receiver AN/GRR-24	To be established in accordance with modification kit implemented
AGC VOLTAGE	VHF Receiver AN/GRR-23	J2-F, J2-B,H
	UHF Receiver AN/GRR-24	J2-F, J2-B,H
PTT CONFIRMATION	VHF Transmitter T-1108/GRT-21	#1: J5-A, J5-C (Main) #2: J5-A, J5-C (Standby)
	UHF Transmitter T-1109/GRT-22	#1: J5-A, J5-C (Main) #2: J5-A, J5-C (Standby)

TABLE 4-2

AUDIO TRANSMIT (MAIN)

Source:..... Radio Equipment Interface Module IB1

Destination:..... Main Transmitter

Impedance:..... 600 +/- 60 ohms

Level:..... Split Mode: -10 dBm +/- 0.5

Selective Mode: -10 dBm +/- 0.5

	Source	Destination	
Terminal Strip:....	(Note 1)	Terminal Strip:.....	
Pin No.:.....	A1	Pin No.:.....	D1
Pin No. (Rtn):..	A2	Pin No.:.....	D2
		(Connector: See Table 4-1)	

Cable Type:..... Shielded Twisted pair, #22 AWG

Notes:

1. Terminal strip reference designations shall be assigned on a frequency-by-frequency basis during installation.

TABLE 4-3

AUDIO TRANSMIT (STANDBY)

Source:..... Radio Equipment Interface Module IB1

Destination:..... Standby Transmitter

Impedance:..... 600 +/- 60 ohms

Level:..... Split Mode: -10 dBm +/-0.5

Selective Mode: -10 dBm +/-0.5

	Source	Destination	
Terminal Strip:....	(Note 1)	Terminal Strip:.....	
Pin No.:.....	A3	Pin No.:.....	D3
Pin No. (Rtn):..	A4	Pin No.:.....	D4
		(Connector: See Table 4-1)	

Cable Type:..... Shielded Twisted pair, #22 AWG

Notes:

1. Terminal strip reference designations shall be assigned on a frequency-by-frequency basis during installation.

TABLE 4-4

AUDIO RECEIVE (MAIN)

Source:..... Main Receiver

Destination:..... Radio Equipment Interface Module IB1

Impedance:..... 50 - 200 ohms (Note 1)

Level:..... Receiver Audio test tone levels will be set for 0 dBm +/- 2 dB into a 600 ohm load. The expected voice variation will be +5 dB, -10 dB from the nominal set value of 0 dBm.

	Source	Destination	
Terminal Strips:...		Terminal Strip:....	(Note 2)
Pin No.:.....	D5	Pin No.:.....	A5
Pin No.:.....	D6	Pin No. (Rtn):..	A6
(Connector: See Table 4-1)			

Cable Type:.....Shielded Twisted pair, #22 AWG

Notes:

1. The receiver output is capable of providing 100 milliwatts into a 600-ohm resistive load.

2. Terminal strip reference designations shall be assigned on a frequency-by-frequency basis during installation.

TABLE 4-5

AUDIO RECEIVE (STANDBY)

Source:..... Standby Receiver

Destination:..... Radio Equipment Interface Module IB1

Impedance:..... 50 - 200 ohms (Note 1)

Level:..... Receiver Audio test tone levels will be set for 0 dBm +/- 2 dB into a 600 ohm load. The expected voice variation will be +5 dB, -10 dB from the nominal set value of 0 dBm.

	Source	Destination	
Terminal Strip:....		Terminal Strip:....	(Note 2)
Pin No.:.....	D7	Pin No.:.....	A7
Pin No.:.....	D8	Pin No. (Rtn):..	A8
(Connector: See Table 4-1)			

Cable Type:..... Shielded Twisted pair, #22 AWG

Notes:

1. The receiver output is capable of providing 100 milliwatts into a 600-ohm balanced resistive load.

2. Terminal strip reference designations shall be assigned on a frequency-by-frequency basis during installation.

TABLE 4-6

TRANSMITTER KEYING (MAIN)

Source:..... Radio Equipment Interface Module IB1

Destination:..... Main Transmitter

Nominal Voltage:.... +6 VDC

Maximum Voltage:.... +6.5 VDC

Minimum Voltage:.... +5.5 VDC

Maximum Current:.... 10 milliamperes

	Source	Destination
Terminal Strip:....	(Note 4)	Terminal Strip:.
Pin No.:.....	A9	Pin No.:..... D9
Pin No.:.....	A10	Pin No.:..... D10
		(Connector: See Table 4-1)

Cable Type:..... Single conductors, #22 AWG

Notes:

1. Solid state radio transmitters T-1108/GRT-21 and T-1109/GRT-22 can be keyed with a ground or by a DC voltage. PTT (transmitter keying), as presently implemented at FAA facilities, is activated with a ground. To implement the positive voltage keying mode, terminals E1 and E4 of Inboard Monitor/Keyer card A3 must be connected together.

2. Keying voltage is continuously applied until a PTT release condition is received from the IB2 Channel Control Module. Receipt of the PTT release condition results in disconnection of the positive DC keying voltage at the transmitter interface and application of a ground. The voltage range on the line shall be from 0.0 to 0.4 VDC with a maximum of 0.2 mA current to the transmitter.

TABLE 4-6

TRANSMITTER KEYING (MAIN)
(CONCLUDED)

3. The positive DC keying control voltage is connected or disconnected within one millisecond after the appropriate control signals appear at the input of the IB1 module.

4. Terminal strip reference designations shall be assigned on a frequency-by-frequency basis during installation.

TABLE 4-7

TRANSMITTER KEYING (STANDBY)

Source:..... Radio Equipment Interface Module IB1

Destination:..... Standby Transmitter

Nominal Voltage:.... +6 VDC

Maximum Voltage:.... +6.5 VDC

Minimum Voltage:.... +5.5 VDC

Maximum Current:.... 10 milliamperes

	Source	Destination
Terminal Strip:....	(Note 4)	Terminal Strip:.
Pin No.:.....	A11	Pin No.:..... D11
Pin No.:.....	A12	Pin No.:..... D12
		(Connector: See Table 4-1)

Cable Type:..... Single conductors, #22 AWG

Notes:

1. Solid state radio transmitters T-1108/GRT-21 and T-1109/GRT-22 can be keyed with a ground or by a DC voltage. PTT (transmitter keying), as presently implemented at FAA facilities, is activated with a ground. To implement the positive voltage keying mode, terminals E1 and E4 of Inboard Monitor/Keyer card A3 must be connected together.

2. Keying voltage is continuously applied until a PTT release condition is received from the IB2 Channel Control Module. Receipt of the PTT release condition results in disconnection of the positive DC keying voltage at the transmitter interface and application of a ground. The voltage range on the line shall be from 0.0 to 0.4 VDC with a maximum of 0.2 mA current to the transmitter.

TABLE 4-7

TRANSMITTER KEYING (STANDBY)
(CONCLUDED)

3. The positive DC keying control voltage connected or disconnected within one millisecond after the appropriate control signals appear at the input of the IB1 module.

4. Terminal strip reference designations shall be assigned on a frequency-by-frequency basis during installation.

TABLE 4-8

KEYING (PTT) CONFIRMATION (MAIN)

Source:..... Main Transmitter

Destination:..... Radio Equipment Interface Module IB1

Logic State:.....	Keying (PTT) Confirmation	No Confirmation (PTT Release Confirmation)
Nominal Voltage:....	+20 VDC (Note 1)	0 VDC (Note 1)
Maximum Voltage:....	+24 VDC	+0.5 VDC
Minimum Voltage:....	+17 VDC	-0.4 VDC

Source		Destination	
Terminal Strip:....		Terminal Strip:.	(Note 2)
Pin No.:.....	D13	Pin No.:.....	A13
Pin No.:.....	D14	Pin No.:.....	A14
(Connector: See Table 4-1)			

Cable Type:..... Single conductors, #22 AWG

Notes:

1. The load impedance (in the IB1 Module) shall be 10K ohms or greater.

2. Terminal strip designations shall be assigned on a frequency-by-frequency basis during installation.

TABLE 4-9

KEYING (PTT) CONFIRMATION (STANDBY)

Source:..... Standby Transmitter

Destination:..... Radio Equipment Interface Module IB1

Logic State:....	Keying (PTT) Confirmation	No Confirmation (PTT Release Confirmation)
Nominal Voltage:....	+20 VDC (Note 1)	0 VDC (Note 1)
Maximum Voltage:....	+24 VDC	+0.5 VDC
Minimum Voltage:....	+17 VDC	-0.4 VDC

	Source	Destination	
Terminal Strip:....		Terminal Strip:.	(Note 2)
Pin No.:.....	D15	Pin No.:.....	A15
Pin No.:.....	D16	Pin No.:.....	A16
(Connector: See Table 4-1)			

Cable Type:..... Single conductors, #22 AWG

Notes:

1. The load impedance (in the IB1 Module) shall be 10K ohms or greater.

2. Terminal strip designations shall be assigned on a frequency-by-frequency basis during installation.

5.66 characters/inch

TABLE 4-10

MAIN/STANDBY TRANSMITTER TRANSFER

Source:..... Radio Equipment Interface Module IB1

Destination:..... Main/Standby Transmitter ATR

Logic State	Main Selected	Standby Selected
Nominal Voltage:....	0 VDC	+24VDC
Maximum Voltage:....		+30.0 VDC
Minimum Voltage:....		+20.0 VDC

	Source	Destination	
Terminal Strip:....		Terminal Strip:....	
Pin No.:.....	A17	Pin No.:.....	D17
Pin No.:.....	A18	Pin No.:.....	D18
		(Connector: See Note 3)	

Cable Type:..... Single conductors, #20 AWG

Notes:

1. Implementation of this function requires replacement of existing transmitter coaxial relays. The relays will operate within a voltage range from +20 to +30 VDC. Arc suppression diodes will be provided at the relay coils.

2. Terminal strip reference designations shall be assigned on a frequency-by-frequency basis during installation.

3. To be determined during installation of coaxial relays.

4. Maximum relay coil current will be less than 150 mA.

5. To avoid keying a transmitter which has not been connected to an antenna, the following constraints shall be observed:

   (1) Switchover between main and standby transmitters shall be inhibited during the time interval that PTT keying is in effect.

TABLE 4-10

MAIN/STANDBY TRANSMITTER TRANSFER
(Concluded)

(2) During the main/standby switchover interval, PTT keying shall be inhibited until confirmation has been made that the audio and PTT inputs to the transmitter and the antenna transfer relay have been switched.

(3) The operation of the circuit controlling the antenna transfer relay and the operation of the interconnection network switching of the corresponding main/standby transmitters shall be interlocked from a fail safe standpoint.

The main/standby switchover of the receive audio shall also be interlocked with the operation of antenna transfer relay.

The IB1 module main/standby switching element shall return a transfer confirmation signal to the IB2 module after completion of the switchover for any transfer required by that module. The confirmation signal shall be a positive voltage applied to the IB2 module interface.

TABLE 4-11
MAIN/STANDBY RECEIVER TRANSFER

Source:..... Radio Equipment Interface Module IB1

Destination:..... Main/Standby Receiver ATR

Logic State	Main Selected	Standby Selected
Nominal Voltage:....	0 VDC	+24VDC
Maximum Voltage:....		+30.0 VDC
Minimum Voltage:....		+20.0 VDC

	Source	Destination	
Terminal Strip:....		Terminal Strip:....	
Pin No.:.....	A20	Pin No.:.....	D20
Pin No.:.....	A21	Pin No.:.....	D21
		(Connector: See Note 3)	

Cable Type:..... Single conductors, #20 AWG

Notes:

1. Implementation of this function requires replacement of existing receiver coaxial relays. The relays will operate within a voltage range from 20 to 30 VDC. Arc suppression diodes will be provided at the relay coils.

2. Terminal strip reference designations shall be assigned on a frequency-by-frequency basis during installation.

3. To be determined during installation of coaxial relays.

4. Maximum relay coil current will be less than 150 mA.

TABLE 4-12

SQUELCH BREAK (MAIN RECEIVER)

Source:..... Main Receiver

Destination:..... Radio Equipment Interface Module IB1

Nominal Voltage:.... 9 VDC (Squelch open - note 1)

Maximum Voltage:.....10 VDC

Minimum Voltage:.... 8 VDC

The IB1 module shall provide a load of 10K ohms or greater.

Source		Destination	
Terminal Strip:....		Terminal Strip:....	(Note 3)
Pin No.:.....	D23	Pin No.:.....	A23
Pin No.:.....	D24	Pin No.:..(RTN).	A24
(Connector: See Table 4-1)			

Cable Type:..... Single conductors, #22 AWG

Notes:

1. Squelch voltage will normally be "operated" when no RF signal is received (squelch closed), the squelch voltage will be "unoperated" when an RF signal is received (squelch open). This latter condition is the squelch break indication. The receiver squelch voltage is less than 1 VDC for the squelch closed condition.

2. An equipment modification will provide access to the squelch break voltage. Modification kit requirements are described in 5.2.

3. Terminal strip reference designations shall be assigned on a frequency-by-frequency basis during installation.

4. In considering the squelch break indication as an input to the PTT confirmation signal as required by 3.3.1.3.2.7, the time delay of the "opening" of the squelch circuit, as a function of the received signal strength and the time constant of the AGC circuit, will be in the order of 120 mSec.

TABLE 4-13

SQUELCH BREAK (STANDBY RECEIVER)

Source:..... Standby Receiver

Destination:..... Radio Equipment Interface Module IB1

Nominal Voltage:.... 9 VDC (Squelch open - note 1)

Maximum Voltage:.... 10 VDC

Minimum Voltage:.... 8 VDC

The IB1 module shall provide a load of 10K ohms or greater.

	Source	Destination	
Terminal Strip:....		Terminal Strip:....	(Note 3)
Pin No.:.....	D25	Pin No.:.....	A25
Pin No.:.....	D26	Pin No.:..(RTN).	A26

Cable Type:..... Single conductors, #22 AWG

Notes:

1. Squelch voltage will normally be "operated" when no RF signal is received (squelch closed), the squelch voltage will be "unoperated" when an RF signal is received (squelch open). This latter condition is the squelch break indication. The receiver squelch voltage is less than 1 VDC for the squelch closed condition.

2. An equipment modification will provide access to the squelch break voltage. Modification kit requirements are described in 5.2.

3. Terminal strip reference designations shall be assigned on a frequency-by-frequency basis during installation.

4. See note 4 of Table 4-12.

TABLE 4-14

AGC VOLTAGE (MAIN RECEIVER)

Source:..... Main Receiver

Destination:..... Radio Equipment Interface Module IB1

Maximum Voltage:.... 10 VDC

Minimum Voltage:.... 0 VDC

The IB1 module shall provide a load of 100K ohms or greater

Source		Destination	
Terminal Strip:.....		Terminal Strip:....	(Note 1)
Pin No.:.....	D27	Pin No.:.....	A27
Pin No.:.....	D28	Pin No.:.....	A28
(Connector: See Table 4-1)			

Cable Type:..... Single conductors, #22 AWG

Notes:

1. An equipment modification will provide access to the isolated AGC signal. Modification kit requirements are described in 5.3.

2. Terminal strip reference designations shall be assigned on a frequency-by-frequency basis during installation.

TABLE 4-15

AGC VOLTAGE (STANDBY RECEIVER)

Source:..... Standby Receiver

Destination:..... Radio Equipment Interface Module IB1

Maximum Voltage:.... 10 VDC

Minimum Voltage:.... 0 VDC

The IB1 module shall provide a load of 100K ohms or greater.

Source		Destination	
Terminal Strip:....		Terminal Strip:....	(Note 2)
Pin No.:.....	D29	Pin No.:.....	A29
Pin No.:.....	D30	Pin No.:.....	A30
(Connector: See Table 4-1)			

Cable Type:..... Single conductors, #22 AWG

Notes:

1. An equipment modification will provide access to the isolated AGC signal. Modification kit requirements are described in 5.3.

2. Terminal strip reference designations shall be assigned on a frequency-by-frequency basis during installation.

TABLE 4-16

TRANSCEIVER TUNING CONTROL

Source:..... Radio Equipment Interface Module IB1

Destination:..... Transceiver

Nominal Voltage:.... (Note 1)

Maximum Voltage:.... (Note 1)

Minimum Voltage:.... (Note 1)

Maximum Current:.... (Note 1)

	Source	Destination
Terminal Strip:....	(Note 2)	Terminal Strip:. (Note 2)
Pin No.:.....	A31	Pin No.:..... D31
Pin No.:.....	A32	Pin No.:..... D32
		(Connector: See Note 3)

Cable Type:..... Single conductors, #22 AWG

Notes:

1. Transceiver tuning signals pass through the IB1 module without being processed. A serial digital bit stream is transmitted over this interface to provide the tuning information required by the tunable radio equipment (TRE). This serial bit stream may be converted to a parallel format if required by the TRE provided by the FAA. This modification kit is discussed in 5.4.

2. Terminal strip reference designations shall be assigned during installation.

3. To be determined based on the type of tunable radio equipment provided by the FAA.

TABLE 4-17

TRANSCEIVER READY/NOT READY

Source:..... Transceiver

Destination:..... Radio Equipment Interface Module IB1

Logic State:.....	READY	NOT READY	
Maximum Voltage:....	+6 VDC	-2 VDC	(Note 1)
Minimum Voltage:....	+2 VDC	-6 VDC	(Note 1)

Differential voltage input (two wire interface). The IB1 module shall provide a load impedance of 4K ohms or greater.

	Source	Destination	
Terminal Strip:....		Terminal Strip:....	(Note 2)
Pin No.:.....	D33	Pin No.:.....	A33
Pin No.:.....	D34	Pin No.:.....	A34
(Connector: See Note 3)			

Cable Type:..... Single conductors, #22 AWG

Notes:

1. The transceiver ready/not ready signals pass through the IB1 module without being processed. If required by the equipment provided by FAA, a modification for each TRE will provide the DC interface to transmit a transceiver ready signal to the control facility. This modification is discussed in 5.4.

2. Terminal strip reference designations shall be assigned on a frequency-by-frequency basis during installation.

3. To be determined based on the type of tunable radio equipment provided by the FAA.

5.0 RADIO EQUIPMENT MODIFICATIONS - In general, the majority of parameters required by the IB1 module can be satisfied with virtually no modifications to existing equipment. The following paragraphs address modifications identified for the stated functions.

5.1 Main/Standby Transmitter/Receiver Transfer - The modification required for the main/standby transmitter/receiver transfer function consists of replacing existing coaxial relays operating on 110 VAC or 48 VDC excitation with a coaxial relay capable of operating within a voltage range from 20 to 30 VDC. A coaxial relay is required for each main/standby transmitter or receiver pair. The coaxial relay associated with the receiver pair shall be a double-pole double-throw device for RF Signal Generator input from the IG module as described in Appendix D.

The IB1 module shall provide two mutually exclusive outputs to select the main or standby radio equipment. The IB1 module main/standby switching element returns a transfer confirmation signal to the IB2 module after completion of the switchover; the confirmation signal is a positive voltage applied to the IB2 module interface.

5.2 Receiver Squelch Break - The squelch break voltage is generated at the receiver's AF/AGC preamplifier (A3) and is externally available at electrical connector J15 on the front of the receiver. This connector is primarily used for performance testing and thus is not an appropriate source of the squelch break signal for connection to the terminal strip.

An alternative access point for an isolated squelch break signal will have to be provided. The implementation of such a modification must not jeopardize the integrity of the receiver. In the event an additional chassis opening is required, the shielding properties of the receiver cabinet must not be degraded. This modification must be coordinated, whenever possible, with other RMS requirements.

5.3 AGC Voltage - The isolated AGC voltage is generated at the receiver's AF/AGC preamplifier (A3) and is externally available at pin 12 of electrical connector J15 on the front of the receiver. This connector is primarily used for performance testing and thus is not an appropriate source of the AGC signal for connection to the terminal strip.

An alternative access point (connected to Pin J2-F) for an isolated AGC signal will have to be provided. The implementation of such a modification must not adversely affect the actual AGC value and must not jeopardize the integrity of the receiver. In the event an additional chassis opening is required, the shielding properties of the receiver cabinet must not be degraded. This modification must be coordinated, whenever possible, with other RMS requirements.

5.4 Transceiver Tuning - Depending on the type of tunable radio equipment provided by the government, a modification kit may be required for each transceiver to perform the following functions:

1. Conversion of the transceiver tuning serial digital bit stream from the RCE to a 16-bit parallel binary coded decimal format usable by the transceiver. Voltage levels on the individual lines will be TTL compatible and will be from +2.4 VDC to +5.5 VDC for a logical one, and from 0.0 VDC to +0.4 VDC for a logical zero. The code representing the desired frequency must be maintained on the output lines until a new frequency is desired. The parallel frequency control signals must change simultaneously with a maximum 200 nanosecond difference between the first and last bits reaching a steady state value (logical one or zero).

2. Provision of a transceiver ready signal to the control facility. A TTL compatible output signal from the transceiver indicates the status of the frequency synthesizer. When the synthesizer has reached a steady state and the output RF frequency is phase locked with the internal reference frequency, the "transceiver ready" signal will be in a logical "one" state. The transceiver modification kit will transmit this signal over a DC interface to the IB1 module by applying a positive DC voltage on this interface to indicate that the transceiver is ready for use. When the voltage controlled oscillator in the transceiver is in the search mode and the control loop is not phase locked to the reference frequency, the transceiver ready signal will be in the logical "zero" state. A negative voltage will indicate that the transceiver is not ready for use.

3. Audio transmit/receive switching and control signal switching (PTT keying, main/standby control, squelch break, and AGC voltage) will use the appropriate fixed frequency interfaces described in Tables 4-2 through 4-15.

5.5 Transmitter and Receiver DC Power - Both the transmitters and receivers can be energized by an external 24 VDC source. The assigned input DC power pins for the transmitters are J5-D & A. The assigned input DC power pins for the receivers are J2-A & B. At this juncture it is not known whether all SS transmitters and receivers have the appropriate wiring for external DC source connection. In the event, some of these units do not have the wiring necessary, a modification providing this capability is required. This modification shall satisfy applicable paragraphs of FAA-G-2100 and FAA-E-2738A.

APPENDIX D:

RADIO CONTROL EQUIPMENT

REMOTE MAINTENANCE MONITORING SYSTEM

INTERFACE REQUIREMENTS

RCE-540-004

TABLE OF CONTENTS

	Page
LIST OF FIGURES	viii
1.0 INTRODUCTION	D 1-1
1.1 Purpose of the Interface Requiremets Document	D 1-1
1.2 Scope	D 1-3
1.3 Organization	D 1-3
2.0 RCE/MPS INTERFACE	D 2-1
2.1 Mechanical Characteristics	D 2-4
2.1.1 Physical Location	D 2-4
2.2 Electrical Characteristics	D 2-4
2.2.1 Data Circuits	D 2-4
2.2.2 Control Circuits	D 2-5
2.3 Data Exchange Protocol	D 2-5
2.3.1 Frame Format	D 2-6
2.3.1.1 Flags	D 2-7
2.3.1.2 Link Address	D 2-7
2.3.1.3 Control Field	D 2-7
2.3.1.4 Information Field	D 2-8
2.3.1.5 Frame Check Sequence	D 2-9
2.3.1.6 Code Transparency	D 2-9
2.3.2 Control of Data Transfer	D 2-9
2.3.2.1 Sending Data	D 2-9
2.3.2.2 Acknowledgement	D 2-10
2.4 Message Format	D 2-10
2.4.1 Polling Messages	D 2-10
2.4.1.1 Continuous Poll	D 2-10
2.4.1.2 Scheduled Poll	D 2-12
2.4.1.3 Specific Poll	D 2-13

TABLE OF CONTENTS (Continued)

	Page
2.4.2 Priority Messages	D 2-13
2.4.2.1 Alarm Message	D 2-14
2.4.2.2 Return-to-Normal (RTN) Message	D 2-15
2.4.2.3 State Change Message	D 2-15
2.4.2.4 Terminal Messages	D 2-15
2.4.2.5 Command Error Message	D 2-16
2.4.2.6 Other Unsolicited Messages	D 2-17
2.4.3 Channel Data Report (CDR)	D 2-17
2.4.4 Command Messages	D 2-19
3.0 INTERFACE WITH RMS CONCENTRATOR	D 3-1
3.1 Mechanical Characteristics	D 3-1
3.2 Electrical Characteristics	D 3-1
3.3 Data Exchange Protocol	D 3-3
3.4 Message Format	D 3-3
4.0 RMMS RADIO EQUIPMENT INTERFACES	D 4-1
4.1 Mechanical Characteristics	D 4-4
4.2 Electrical Characteristics	D 4-4
4.2.1 PTT Status	D 4-4
4.2.1.1 Signal Characteristics	D 4-5
4.2.1.2 Interpretation	D 4-5
4.2.2 Exciter Only/LPA Operation	D 4-5
4.2.2.1 Signal Characteristics	D 4-6
4.2.2.2 Interpretation	D 4-6
4.2.3 Exciter Forward Power	D 4-6
4.2.3.1 Signal Characteristics	D 4-7
4.2.3.2 Interpretation	D 4-7

TABLE OF CONTENTS (Continued)

	Page
4.2.4 Exciter Reverse Power	D 4-7
4.2.4.1 Signal Characteristics	D 4-7
4.2.4.2 Interpretation	D 4-9
4.2.5 LPA Forward Power	D 4-9
4.2.5.1 Signal Characteristics	D 4-12
4.2.5.2 Interpretation	D 4-12
4.2.6 LPA Reverse Power	D 4-12
4.2.6.1 Signal Characteristics	D 4-12
4.2.6.2 Interpretation	D 4-13
4.2.7 Voice Frequency (VF) Input Level	D 4-13
4.2.7.1 Signal Characteristics	D 4-13
4.2.7.2 Interpretation	D 4-15
4.2.8 Percent Modulation	D 4-15
4.2.8.1 Signal Characteristics	D 4-15
4.2.8.2 Interpretation	D 4-15
4.2.9 Main/Standby Transmitter Transfer	D 4-17
4.2.9.1 Signal Characteristics	D 4-17
4.2.9.2 Interpretation	D 4-17
4.2.10 AGC Voltage	D 4-17
4.2.10.1 Signal Characteristics	D 4-18
4.2.10.2 Interpretation	D 4-18
4.2.11 VF Output Level	D 4-18
4.2.11.1 Signal Characteristics	D 4-18
4.2.11.2 Interpretation	D 4-18

TABLE OF CONTENTS (Continued)

	Page
4.2.12 Off-Line Receiver Tests	D 4-19
4.2.12.1 Measurement and INterpretation of (S+N/N)	D 4-19
4.2.12.2 Measurement of Certification Parameters	D 4-20
4.2.12.3 Limitations on RF Test Signals	D 4-21
4.2.13 Main/Standby Receiver Transfer	D 4-21
4.2.13.1 Signal Characteristics	D 4-21
4.2.13.2 Interpretation	D 4-22
4.3 Protocol	D 4-22
4.4 Message Formats	D 4-22
4.4.1 Polling Messages	D 4-22
4.4.1.1 Continuous Poll	D 4-23
4.4.1.2 Scheduled Poll	D 4-23
4.4.1.3 Specific Poll	D 4-23
4.4.2 Priority Messages	D 4-24
4.4.2.1 Alarm Message	D 4-24
4.4.2.2 Return-to-Normal (RTN) Message	D 4-25
4.4.2.3 State Change Message	D 4-25
4.4.2.4 Terminal Message	D 4-25
4.4.3 Channel Data Report	D 4-25
4.4.3.1 Transmitter CDR Message	D 4-26
4.4.3.2 Receiver CDR Message	D 4-28
5.0 ENVIRONMENTAL AND SITE SECURITY INTERFACES	D 5-1
5.1 Mechanical Characteristics	D 5-3
5.2 Electrical Characteristics	D 5-3
5.2.1 Site Parameters	D 5-3
5.2.1.1 AC Voltage	D 5-3

Page

5.2.1.1.1 Signal Characteristics D 5-3
5.2.1.1.1 Interpretation D 5-4

5.2.1.2 DC Voltage D 5-4

5.2.1.2.1 Signal Characteristics D 5-4
5.2.1.2.2 Interpretation D 5-4

5.2.1.3 E/G Master Safety Switch Status D 5-5

5.2.1.3.1 Signal Characteristics D 5-5
5.2.1.3.2 Interpretation D 5-5

5.2.1.4 E/G OFF/RUN Status D 5-5

5.2.1.4.1 Signal Characteristics D 5-5
5.2.1.4.2 Interpretation D 5-6

5.2.1.5 Ambient Room Temperature D 5-6

5.2.1.5.1 Sensor Characteristics D 5-6
5.2.1.5.2 Interpretation D 5-6

5.2.1.6 Smoke Detector D 5-6

5.2.1.6.1 Sensor Characteristics D 5-6
5.2.1.6.2 Interpretation D 5-8

5.2.1.7 Building Entrance Doors D 5-8

5.2.1.7.1 Sensor Characteristics D 5-8
5.2.1.7.2 Interpretation D 5-8

5.2.2 Site Controls D 5-8

5.2.2.1 Engine Generator Start/Stop D 5-8

5.2.2.1.1 Electrical Characteristics D 5-9
5.2.2.1.2 Initiation D 5-9

5.2.2.2 HVAC Lockout D 5-9

TABLE OF CONTENTS (Continued)

	Page
5.2.2.2.1 Electrical Characteristics	D 5-9
5.2.2.2.2 Initiation	D 5-9
5.3 Protocol	D 5-9
5.4 Message Formats	D 5-10
5.4.1 Polling Messages	D 5-10
5.4.2 Priority Messages	D 5-10
5.4.2.1 Alarm Messages	D 5-10
5.4.2.2 RTN Messages	D 5-11
5.4.2.3 State Change Message	D 5-11
5.4.3 Channel Data Report (CDR)	D 5-12
5.4.4 Command Messages	D 5-13
6.0 ENVIRONMENTAL RMS INTERFACE	D 6-1
6.1 Mechanical Characteristics	D 6-1
6.1.1 Physical Location	D 6-3
6.2 Electrical Characteristics	D 6-3
6.2.1 Data Circuits	D 6-3
6.2.2 Control Circuits	D 6-3
6.3 Data Exchange Protocol	D 6-4
6.4 Message Formats	D 6-5
6.4.1 Polling Messages	D 6-5
6.4.1.1 Continuous Poll	D 6-5
6.4.1.2 Scheduled Poll	D 6-6
6.4.1.3 Specific Poll	D 6-7
6.4.2 Priority Message	D 6-7
6.4.2.1 Alarm Message	D 6-7
6.4.2.2 Return-to-Normal (RTN) Message	D 6-8

TABLE OF CONTENTS (Concluded)

	Page
6.4.2.3 State Change Message	D 6-8
6.4.2.4 Terminal Messages	D 6-9
6.4.2.5 Command Error Message	D 6-9
6.4.2.6 Other Unsolicited Messages	D 6-9
6.4.3. Site Data Report (SDR)	D 6-9
6.4.4 Command Messages	D 6-10
7.0 PORTABLE MAINTENANCE DATA TERMINAL INTERFACES	D 7-1
7.1 Mechanical Characteristics	D 7-2
7.1.1 Physical Location	D 7-2
7.1.2 Control	D 7-2
7.2 Electrical Characteristics	D 7-4
7.2.1 Data Circuits	D 7-4
7.2.2 Control Circuits	D 7-4
7.3 Data Exchange Protocol	D 7-5
7.3.1 Block Format	D 7-6
7.3.2 Control of Data Transfer	D 7-7
7.3.2.1 Polling and Collection	D 7-7
7.3.2.2 Selection and Message Transfer	D 7-8
7.4 Message Format	D 7-8
7.4.1 Local Setup	D 7-9
7.4.2 MPS Log On/Log Off	D 7-9
7.4.3 Mes3age Exchange with the MPS	D 7-10
7.4.4 Channel Related Functions	D 7-10
7.4.5 Communications To/From Other RMMS Sites	D 7-11
7.4.6 Administrative Communications	D 7-11

LIST OF FIGURES

Figure		Page
1-1	RCE/RMMS INTERFACES	D 1-2
2-1	FUNCTIONAL LOCATION OF RCE/MPS INTERFACE	D 2-3
3-1	FUNCTIONAL LOCATION OF RCE/RMS CONCENTRATOR INTERFACE	D 3-2
4-1	RCE/RMMS INTERFACES AT REMOTE RADIO SITES	D 4-2
4-2	VHF AND UHF FORWARD POWER SENSOR CHARACTERISTICS	D 4-8
4-3	VHF REFLECTED POWER SENSOR CHARACTERISTICS	D 4-10
4-4	UHF REFLECTED POWER SENSOR CHARACTERISTICS	D 4-11
4-5	VF INPUT SENSOR CHARACTERISTICS	D 4-14
5-1	RCE/RMS INTERFACE WITH ENVIRONMENTAL AND SITE SECURITY SENSORS	D 5-2
5-2	ROOM TEMPERATURE SENSOR CHARACTERISTICS	D 5-7
6-1	RCE/RMMS INTERFACES WITH ENVIRONMENTAL RMS	D 6-2
7-1	PORTABLE MAINTENANCE DATA TERMINAL INTERFACES	D 7-3

1.0 INTRODUCTION - The Radio Control Equipment (RCE) consists of a family of modules that will flexibly provide both voice communications and control functions needed for operation of remote radio transmitter/receiver facilities. Digital Techniques are employed to transmit the required control signals and responses, multiplexed on the same communications medium required for voice transmission. The RCE, using state-of-art technology will replace the current tone control equipment at control (Type II) and remote (Type I) facilities, and will overcome known limitations of that equipment.

The RCE includes features to support the Remote Maintenance Monitoring System (RMMS). It provides for the measuring of various performance parameters by periodically examining sensors associated with the remote transmitters and receivers. It provides for monitoring security sensors and other miscellaneous sensors at the remote radio sites. The RCE monitors its own performance, both at control facilities and remote sites and the performance of the communication trunks. Using its digital communications capability, the RCE provides a two-way transparent data path for the transmission of alarms and measurements in response to polling signals from the Maintenance Processing Subsystem (MPS).

Operation of these RMMS features requires interfacing directly with an MPS or an RMS Concentrator at the control facility. At the remote radio site, interfacing with sensors in the transmitters and receivers as well as various environmental and site security sensors is required. For remote radio sites equipped with an Environmental Remote Monitoring Subsystem (ERMS), an interface with the ERMS is required in lieu of the interface with environmental and site security sensors. Furthermore, the capability to interface with a portable Maintenance Data Terminal (MDT) is required at both control facilities and remote sites. The required interfaces are illustrated in figure 1-1.

1.1 Purpose of the Interface Requirements Document - This document identifies and specifies the interface requirements between the RCE and elements of the RMMS. The message exchanges between the MPS and the RCE (RCE Concentrator) and the general operations of RMMS functions throughout the RCE, shall be in conformance with Remote Maintenance Monitoring System Interface Control Document, Maintenance Processor Subsystem to Remote Monitoring Subsystems and Remote Monitoring Subsystem Concentrators, NAS-MD-790, dated April 11, 1986. It is the purpose of this document to interpret the interface characteristics required for the RCE in sufficient detail to allow design work to proceed.

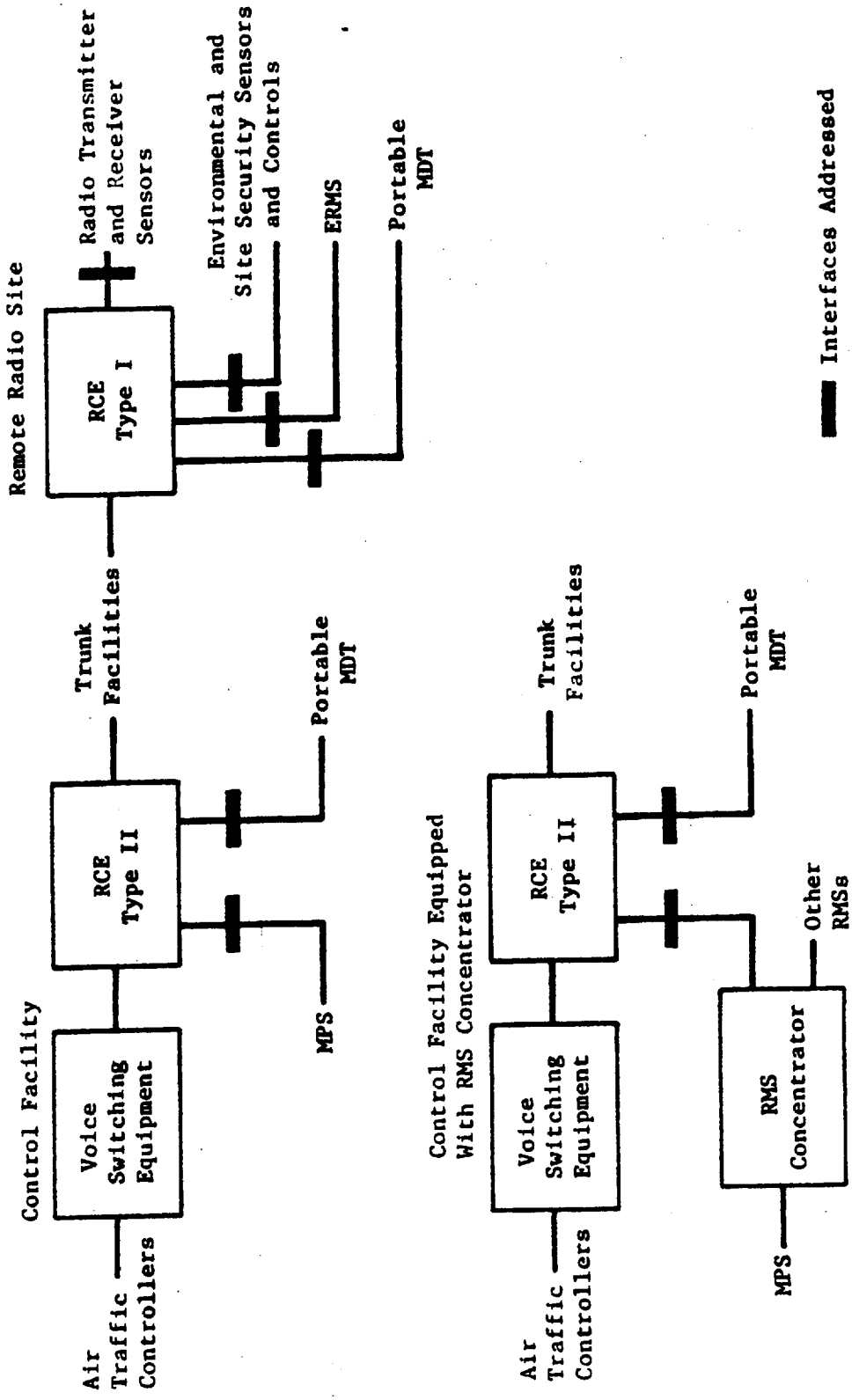

Figure 1-1
RCE/RMMS Interfaces

1.2 Scope - This document is limited to the RMMS interfaces with the MPS, RMS Concentrator, sensors located in or associated with the solid state transmitters and receivers, sensors located at the remote site to measure such parameters as air temperature, smoke detector status and intrusion alarm status, ERMS and portable MDTs.

For each of these interfaces, the physical location of the interface is specified along with the physical and electrical characteristics. The data exchange protocol is specified for each interface. Message formats are included except for those instances where the RCE data transfer characteristics are considered to be transparent.

This document does not specify interfaces between modules of the RCE. Such interfaces are considered to be internal to the RCE. The document does not cover the interfaces with the communications trunk facilities, although the data must flow through such facilities. At these interfaces the data signals are multiplexed with voice signals. The characteristics of the trunk interfaces are covered in RCE Specification FAA-E-2738A.

1.3 Organization - This document is organized with a major section addressing each of the interfaces required to support RMMS functions. These are the interfaces with MPS, RMS Concentrator, Radio Equipment Sensors, Environmental and Site Security Sensors, ERMS and Portable MDT. Each of these sections includes the location and the mechanical and electrical characteristics of the interface. Also included are the data control protocol to be used and message formats where applicable.

The final section, Reference Documents, provides a list of documents that are applicable to the RCE/RMMS interfaces.

2.0 RCE/MPS INTERFACE - RCE control facility installations (Type II RCE) that are collocated with a Maintenance Processor Subsystem (MPS) shall be equipped with an interface to exchange RMMS data directly with the MPS. The same interface shall be capable of operation through a modem equipped telephone trunk, for use if the distances involved exceed the direct connect capability of the interface design. The interface shall provide for the exchange of messages in digital format between the MPS and RMMS functions included in all RCE channels. Messages may be exchanged between the MPS and the local Type II RCE, or the corresponding remote site Type I RCE through the local Type II RCE. The functional location of this interface is shown in Figure 2-1.

The RCE interface with the FAA's Maintenance Processor Subsystem (MPS) shall include a microprocessor controlled RCE Concentrator (RCEC) Module to collect messages from up to 120 RCE RMS/MPS Interface Modules (IIG Modules), associated with the various air/ground radio channels, and relay them to the MPS in response to polling from the MPS. The Concentrator Module may be configured to consist of a Concentrator Assembly, capable of collecting messages from up to 12 IIG modules, and Expander Assemblies to accomplish collection of messages from IIG Modules up to the maximum 120 stipulated. It shall also distribute messages received from the MPS, each message to one of the IIG Modules as specified by address information contained in the message. Control of the message flow shall be in accordance with Section 2.3. The RCEC must maintain any connectivity relationships that may be needed to perform the relay function properly, despite switching or combining of channels in the RCE IIC1 Module.

The RCEC shall conform to electrical and physical characteristics stated in Paragraph 3.8 of Specification FAA-E-2738A, and shall be mounted inside one of the RCE equipment cabinets at each Type II RCE facility. Any failure in the RCEC shall be included in the maintenance displays and fault isolation capabilities provided at the Type II Maintenance Panel, in accordance with Paragraph 3.6 of Specification FAA-E-2738A. First Article testing of the RCEC shall include a demonstration of its capacity to support the full complement of RCE channels. The capacity demonstration may be performed utilizing not less than 12 RCE channels, providing that the capability to support up to 120 channels is clearly shown by analysis of the software and engineering drawings.

Reliability of the RCEC shall be as apportioned by the contractor and shall be within the total system requirements as stated in paragraph 3.7 of Specification FAA-E-2738A. Mean time to restore (MTTR) shall be 0.5 hours or less. The reliability and maintainability calculations and demonstrations shall be performed in accordance with Paragraph 3.7 of Specification FAA-E-2738A. Reliability and maintainability demonstration shall be performed on an RCEC in a configuration of not less than 12 channels.

The RCEC will be polled by the MPS. Polling messages are of three types: Continuous, Scheduled, and Specific.

When polled by a Continuous Poll message, the RCE Concentrator shall respond with any messages that are awaiting transmission. It shall send those messages to the MPS in sequence by priority, as follows:

1. Alarm and return-to-normal messages.
2. State change messages.
3. Terminal Messages.
4. Site data report messages.
5. Other unsolicited messages.

If a higher priority message is received or generated by a IIG module while a message of lower priority is being transmitted to the MPS, the current message shall not be interrupted, but the higher priority message shall be processed ahead of any subsequent lower priority messages.

In response to a Scheduled or Specific Poll, the RCE Concentrator shall respond with any messages that are awaiting transmission, as in the case of response to a Continuous Poll. In addition, it shall relay the polling message to the IIG Module identified by intermediate address information contained in the polling message. As the required response messages are generated by the IG and IIG Modules, they shall be relayed to the MPS, via the RCE Concentrator, in response to future polling messages.

In the event there are no messages awaiting transmission, the RCE Concentrator shall respond with a Receiver Ready supervisory frame to acknowledge the poll and enable the MPS to resume the polling sequence.

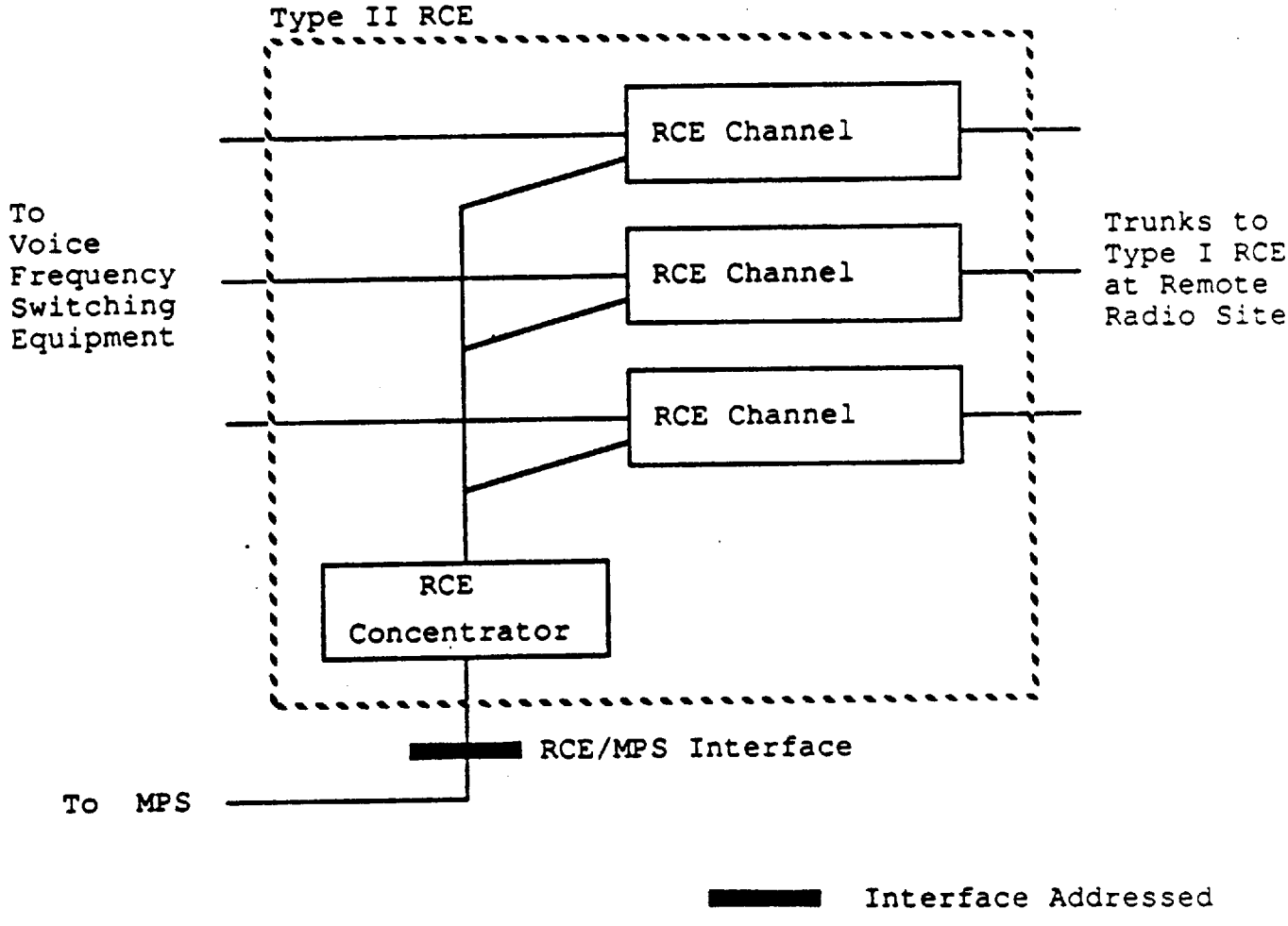

FIGURE 2-1
FUNCTIONAL LOCATION OF RCE/MPS INTERFACE

2.1 Mechanical Characteristics - The interface shall be in accordance with EIA Standard RS-232-C with specific characteristics as enumerated below.

2.1.1 Physical Location - The demarcation point for the RCE/MPS interface shall be at a connection panel to be provided as part of the RCE Concentrator. The connection panel shall include a 25 pin RS-232-C receptacle (Amphenol Part 17-80250-15 or equivalent) to accommodate full duplex data transfer. The receptacle shall contain female contacts and a male shroud. Cabling between the receptacle and the RCE Concentrator is considered to be part of the RCE. Cabling between the receptacle and the MPS, either direct or via a 2400 bps Modem equipped trunk, is considered to be part of the MPS and will be furnished by the government.

2.2 Electrical Characteristics - The interface with the MPS shall be in accordance with EIA Standard RS-232-C Interface Type D, as stated herein. The RCE Concentrator is considered to be Data Terminal Equipment (DTE) as defined in RS-232-C, section two "Electrical Signal Characteristics" for operation with a modem equipped trunk. At facilities where the distances involved do not require the use of modems the required interchange of circuits and the clock sources to allow operation with another DTE (MPS or RMS concentrator) will be included in a "Null Modem" to be provided as part of the government furnished interconnecting cabling. Circuit drivers and receivers shall be designed to assure reliable operation over cable lengths of up to 400 feet. Specific circuits to be provided shall be as enumerated below.

2.2.1 Data Circuits - Data transfer from the RCE shall take place over the BA (pin 2) circuit in the RS-232-C connector. Data bits shall be clocked out in response to timing provided on the DB circuit (pin 15).

Each transmission data element shall start in response to the positive going transition of the timing signal. Data transfer to the RCE shall use the BB (pin 3) circuit. Clock signals will be provided on the DD circuit (pin 17) with the positive to negative transition indicating the approximate center of each data element. Each of these circuits shall use circuit AB (pin 7) as a common return path. All data transfers shall take place at 2400 bits per second in synchronous mode. The hardware interface shall support the simultaneous exchange of data in both directions.

2.2.2 Control Circuits - The following circuits shall be implemented to control the flow of data across the interface:

CIRCUIT	PIN	DIRECTION	MEANING
CA	4	from RCE	Request to Send - to indicate that the RCE has data to be transferred to the MPS
CB	5	to RCE	Clear to Send - to indicate that data transfer may proceed
CC	6	to RCE	Data Set Ready - to indicate that power is on and the interface is ready to accept data
CF	8	to RCE	Received Line Signal Detector signal normally provided by a modem to indicate that a signal is present on the line

Other control circuits in the RS-232-C interface may be utilized if required by the contractor's design, however, it shall be the responsibility of the contractor to obtain government approval for the use of such circuits to assure proper operation of the interface.

All the above data and control circuits shall share a common return path, circuit AB (pin 7) Signal Ground. Circuit AA (pin 1) Protec4ave Ground shall be utilized to interconnect the frames of the RCE Concentrator and MPS.

2.3 Data Exchange Protocol - Data transfer across the RCE/MPS interface shall be controlled in accordance with Advanced Data Communications Control Procedures (ADCCP) ANSI S4andards X3.66 as defined in Remote Maintenance Monitoring System Interface Control Document NAS-MD-790, Section 4, Bit-Oriented Data Link Procedures for Synchronous Communications. In the application of NAS-MD-790 to the RCE/MPS interface, all references to RMS shall be interpreted to refer to the RCE, and specifically, the RCE Concentrator.

2.3.1 Frame Format - All data transfers across the RCE/MPS interface shall be in frames consisting of a variable number of 8 bit characters (bytes or octets), as specified in NAS-MD-790, Paragraph 4.2.

The fields comprising a frame are:

FUNCTION	NUMBER OF BITS	FORMAT
Flag	8	0111 1110
Link Address	8	1XXX XXXX
Control Field	8	XXXX XXXX
Information Field	Variable	Variable
Frame Check Sequence	16	Variable
Flag	8	0111 1110

To be consistent with NAS-MD-790, the least significant bit, the first bit of a field to be transmitted, is shown on the left. This convention is followed in format examples throughout this document.

The three types of frames, as indicated by bits in the control field are used. The definition of each and their purpose shall be as specified in NAS-MD-790 Paragraphs 4.2.2.1 (Information Transfer Frame), 4.2.2.2 (Supervisory Frame), and 4.2.2.3 (Unnumbered Frame).

2.3.1.1 Flags - Each frame shall start and end with a flag character (0111 1110). The purpose of the flags is to identify the start and end of a frame. Since frames are of variable length, two flags are needed, one at the start of the frame and the other at the end. Idle time between the transmission of frames shall be filled with a sequence of flag characters to allow synchronization to be maintained.

2.3.1.2 Link Address - The link address shall consist of a single octet, the identification (ID) of the secondary station. For transfers across the MPS/RCE Concentrator interface, in either direction the secondary station is the RCE Concentrator and therefore, the link address will be the designation of that RCE Concentrator. The link address will fall in the range of values from hex 21 to hex FD. The least significant bit will be a "1".

Routing of messages through the RCE Concentrator shall follow the same techniques used for an RMS concentrator, as specified in NAS-MD-790. As a message flows from RMS to MPS, in some instances through multiple levels of concentration, each level (or node) shall add the link address to the beginning of the supplementary address which is at the start of the information field, and insert a new link address with a value representing its own identification. Thus, as the message passes through the levels of concentration, the supplemental address will indicate the route the message followed to reach the MPS and will uniquely identify the source.

For messages flowing from MPS to RMS, the opposite procedure shall be followed. At each concentrator node, the link address shall be deleted and replaced by moving the one address octet from the supplementary address field in the information frame to the link address field. This address will identify the link to the next level down. The supplementary address field will lose one octet as the message passes through each level in the communications hierarchy in its progress toward the RMS. In the RMS (IIG Module) the only address remaining in the message will be the logical unit address.

2.3.1.3 Control Field - The control field shall consist of a single octet containing information necessary for the control of data flow. Formats are as indicated in NAS-MD-790, Paragraph 4.2.2. The control field is used to identify three kinds of frames: Information Transfer (I), Supervisory Commands and Responses (S), and Unnumbered Commands and Responses (U). The control field for an I frame contains two sequence numbers. The first, N(S), is the sequence number of the frame being sent. The second, N(R), is the sequence number of the next frame expected on the return path, and indicates correct reception of all frames up to but not including N(R). The control field for S frames contains command and response information required to control the retransmission of I frames that are received with errors. For U frames it provides for additional link control functions such as transmitting mode setting commands and recovery commands. The format and use of S and U frames are indicated in NAS-MD-790, Paragraphs 4.2.2.2 and 4.2.2.3.

One bit in the control field is designated as the poll/final (P/F) bit.

For frames traversing from the MPS to an RMS (RCE Concentrator in the case of the RCE) this bit is used as a poll indicator. A "1" bit in this position indicates that the frame is soliciting messages from the entity identified by the link address. A "0" bit in this position is used to indicate that the frame is not soliciting a response. Such a frame may be used to send information to a remote facility in response to requests from that remote facility or to perform various necessary functions incidental to the communications procedures.

For frames being transmitted from the RMS (RCE Concentrator) to the MPS, a "1" bit in the P/F position is used to indicate the last frame to be transmitted in response to the current poll. A "0" bit identifies an intermediate frame.

2.3.1.4 Information Field - The information field shall consist of a variable length address field, a delimiter, a message function code and the information to be transmitted. On the interface between the MPS and the RCE Concentrator the information field will appear as follows:

FUNCTION	NUMBER OF BITS	FORMAT
RMS Address	8	RCE Channel ID
Logical Unit Address	8	Logical Unit ID
Delimiter	8	0000 0000 Message
Function Code	8	XXXX XXXX
Text	Variable	Variable

Each octet of the address except the logical unit address shall have a value in the range from hex 21 to hex FD. The least significant bit of each octet shall be a binary "1". The logical unit address, which will never be used as a link address, may have any value from hex 20 through hex FE.

In the address information, hex FF shall be used as a global indicator. Hex FF in the logical unit address position will refer to all logical units within the channel specified by the preceding octet. This address indicator will be used in Scheduled Polls which are intended to solicit data from all data points in all the logical units within an RMS (RCE channel).

Each status point or parameter to be measured will be assigned a data point address in the range from hex 20 to hex FF. These will be used to identify a specific parameter. Although the data point identifier is technically an address character, it will not be used in the address field. When used, the data point address will be transmitted after the delimiter and message function code, which terminate the address field.

The message function code shall be a single octet following the delimiter. The message function code indicates the function and format of the message. Specific assignments shall be specified in NAS-MD-790, Paragraph 3.3.1.

The text contains any data to be transmitted. The data may consist of numerical values of sensor readings at a remote radio site or they may consist of commands to initiate certain actions at a destination. Specific messages and the formats for them are given in Section 2.4.

The information field may not exceed 504 octets. If a message is longer than 504 octets it must be divided into groups of not more than 504 octets and transmitted in multiple transmission frames.

2.3.1.5 Frame Check Sequence - The frame check sequence (FCS) shall consist of a 16 bit sequence as specified in American National Standard for Advanced Communications Control Procedures (ADCCP), ANSI Standard X3.66, Paragraph 3.5. The FCS shall be included in each frame transmitted across the RCE/MPS interface and shall be checked on the receiving side of the interface. Failure of the check to indicate accuracy shall initiate repeat procedures to correct the errors.

2.3.1.6 Code Transparency - In order to prevent false flag recognition, the sending equipment shall insert a binary 0 bit following any contiguous group of five binary 1 bits in the data stream between the opening and closing flags of a frame. On the receiving side of the interface, the data stream shall be monitored to delete any inserted binary 0 bits and to recognize legitimate flag sequences, following the technique described in NAS-MD-790, Paragraph 4.2.3.

2.3.2 Control of Data Transfer - The interface shall provide for the transfer of messages simultaneously from the RCE to the MPS and from the MPS to the RCE, as long as there are messages to be transferred and the control circuits in the RS-232-C interface do not inhibit the transfer.

2.3.2.1 Sending Data - Information frames (I frames), each containing a message of up to 504 octets or a portion of a longer message in its information field, shall be used for the transfer of messages. As the frames are transmitted, each shall be assigned a binary sequence number, N(S), in the control field to assure completeness and to provide identification of each frame to support the acknowledgement process. Up to seven (7) frames may be sent before receiving an acknowledgement.

2.3.2.2 Acknowledgement - Each frame received shall be checked for accuracy through use of the frame check sequence. Frames received without errors shall be acknowledged through use of the expected next number, N(R), in the control field of an I frame or S frame on the return path.

If a frame is received containing errors, its sequence number is returned as N(R) to cause the sender to repeat that frame and any subsequent frames.

Supervisory Commands and Responses (S frames) and Unnumbered Commands and Responses (U frames) shall be used to provide acknowledgement and repeat commands when no information frames are flowing on the return path and to perform certain link control functions. The format and use of

these frames shall be as specified in NAS-MD-790, Paragraphs 4.2.2.2 and 4.2.2.3.

2.4 Message Format - The RCE/MPS interface must exchange various types of messages to support the RMMS function. The message types and their direction of flow are:

Polling Messages	MPS to RCE
Priority Messages	RCE to MPS
Site Data Report Messages	RCE to MPS
Command Messages	MPS to RCE
Portable Terminal Messages	Both Directions

The following Paragraphs specify the formats for these messages and provide some information regarding the handling required.

2.4.1 Polling Messages - Polling is the means by which the MPS requests and controls the flow of RMMS information from the monitored facilities. The polling procedure will be as described in NAS-MD-790, Paragraph 3.1 and Subparagraphs thereunder. Three polls are identified: Continuous Poll, Scheduled Poll, and Specific Poll.

2.4.1.1 Continuous Poll - The continuous poll is the supervisory command by which the MPS collects messages. The continuous poll message will have a format as specified in NAS-MD-790, Paragraph 4.4.1. Interpreted for the MPS/RCE Concentrator interface, this format is:

FUNCTION	NUMBER OF BITS	FORMAT
Flag	8	0111 1110
Link Address	8	RCE Concentrator ID
Control Field	8	1000 1N(R)
Frame Check Sequence	16	FCS
Flag	8	0111 111

Where N(R) - 3 bits - is the expected sequence number of the next received frame, and FCS is the Frame Check Sequence (FCS) as defined in NAS-MD-790, Paragraph 4.2

The RCE Concentrator shall independently poll all channels assigned to it at a rate that will assure collection of alarms from all channels during the MPS continuous poll cycle.

By means of the continuous pool the MPS will interrogate the connected facilities, including the RCE, at a rate to be determined by the MPS program, but not more often than once each five (5) seconds. In response to the continuous poll, the RCE Concentrator shall send any messages it has collected from all of its assigned channels since the previous poll. These messages shall be sent in sequence priority as follows:

1. Alarm and return-to-normal messages
2. State change messages
3. Terminal messages
4. Site data report messages
5. Other unsolicited messages

The formats of such messages are as indicated in section 2.4.2 and 2.4.3.

In the event no messages have been collected since the previous poll, the RCE Concentrator shall respond with a Receiver Ready (RR) supervisory frame, as specified in NAS-MD-790, paragraph 4.2.2.2. (Table 4-1), to allow the MPS to proceed with its polling sequence.

The format for this frame is:

FUNCTION	NUMBER OF BITS	FORMAT
Flag	8	0111 1110
Link Address	8	RCE Concentrator ID
Control Field	8	1000 1 N(R)
Frame Check Sequence	16	FCS
Flag	8	0111 1110

Since each link address will allow the next address character to accommodate a maximum of 111 IIG modules, the RCE Concentrator may be assigned two link addresses to enable it to address the required number of IIG Modules (120). The polling sequences from the MPS will alternate between the two link addresses, with a poll for each link address during the 5 second poll cycle. In its response to each poll, the RCE Concentrator shall relay any messages it has collected in the group identified by the link address of the polling message. The link address for each response message shall correspond to the link address of the polling message. Separate number sequences, for use in the control field of both MPS to RCE and RCE to MPS I frames, shall be used for each link address. The RCE Concentrator shall not respond to a poll containing an address other than those assigned or to any poll with an invalid FCS.

2.4.1.2 Scheduled Poll - The scheduled poll is the command by which the MPS collects all continuously monitored RMS parameters in the form of site data reports. The scheduled poll will solicit messages from each channel at a rate to be determined by the MPS program. This poll is not expected more often than once each hour. The scheduled poll will include one poll message for each RMS (or RCE channel). The RCE Concentrator will be assigned an RMS address and will be included in the polling sequence along with the RCE channels. Common modules (IIC1, IIE IIF, the Maintenance Panels and Power Subsystems as well as corresponding elements at the remote sites) for which measurable parameters are provided may, at the contractor's option, be reported as logical units of this RMS address.

The format for each scheduled poll message shall be as specified in NAS-KD-790, Paragraph 4.4.2. As interpreted for the RCE, this format is:

FUNCTION	NUMBER OF BITS	FORMAT
Flag	8	0111 1110
Link Address	8	Note 1
Control Field	8	ON(S) 1N(R)
RMS Address	8	RCE Channel ID
Logical Unit Address	8	1111 1111 - Note 2
Delimiter	8	0000 0000
Poll Indicator	8	0000 0000
Frame Check Sequence	16	FCS
Flag	8	0111 1110

Note 1: For facilities of such size as to required two RCE Concentrator IDs, the scheduled polls will alternate between the two.

Note 2: The sequence 1111 1111 is a global indicator indicating that responses are desired from all logical units.

Upon receipt of a valid scheduled poll, the RCE Concentrator shall relay the polling message to the addressed channel to cause it to generate site data report messages. In addition, the RCE shall respond to the MPS with messages transmitted in the priority sequence outlined in Section 2.4.1.1.

If no priority messages or site data report messages are awaiting transmission to the MPS, the RCE Concentrator shall respond with a Receiver Ready supervisory frame as described in Section 2.4.1.1.

2.4.1.3 Specific Poll - The specific poll is the means by which the MPS may retrieve performance data from a specific logical unit, such as a remote transmitter or receiver. The procedure is normally initiated by

the MPS in response to an operator command. The format of the specific poll message as it appears at the MPS/RCE interface is as specified in NAS-MD-790, Paragraph 4.4.2. As interpreted for the RCE Concentrator, the message format will be:

FUNCTION	NUMBER OF BITS	FORMAT
Flag	8	0111 1110
Link Address	8	RCE Concentrator ID
Control Field	8	ON(S) 1N(R)
RMS Address	8	RCE Channel ID
Logical Unit Address	8	Logical Unit ID
Delimiter	8	0000 0000
Poll Indicator	8	0000 0010
Frame Check Sequence	16	FCS
Flag	8	0111 1110

Upon receipt of a valid specific poll, the RCE Concentrator shall relay the polling message to the addressed channel which will in turn generate a site data report message containing measurements for the specified logical unit. In addition, the RCE shall respond to the MPS with messages transmitted in the priority sequence outlined in Section 2.4.1.1.

If no messages are awaiting transmission to the MPS, the RCE Concentrator shall respond with a Receiver Ready supervisory frame as described in Section 2.4.1.1.

2.4.2 Priority Message - Priority messages are of four types: alarm messages, return-to-normal messages, state change messages, and terminal messages. The format of these messages, at the interface between the RCE Concentrator and the MPS, shall be as indicated below.

2.4.2.1 Alarm Message - At remote radio transmitter/receiver sites, various parameters of the radio equipment are monitored. If the value of any of these parameters should fall outside a range that is considered to be the normal operating range, an alarm is initiated. The alarm takes the form of a message to be sent to the MPS in response to the continuous poll.

The format for alarm messages, as it appears on the RCE/MPS interface, is in accordance with NAS-MD-790, Paragraph 3.4.1. This format is illustrated as follows:

FUNCTION	NUMBER OF BITS	FORMAT
Flag	8	0111 1110
Link Address	8	RCE Concentrator ID
Control Field	8	ON(S) FN(R)
RMS Address	8	RCE Channel ID
Logical Unit Address	8	Logical Unit ID
Delimiter	8	0000 0000
Message Function Code	8	Note 1
Data Point Address	8	Data Point ID
Condition Status	8	Note 2
Monitored Value	16	Note 3
Multiple Alarms	Variable	Note 4
Frame Check Sequence	16	FCS
Flag	8	0111 1110

Note 1: An alarm message is indicated by an ASCII upper case "A" for a hard alarm, lower case "a" for a soft alarm. A hard alarm is defined as representing a condition that causes equipment to become inoperable. A soft alarm represents operation outside the normal operating range.

Note 2: Condition status is a single ASCII character as defined in NAS-MD-790, Paragraph, 3.3.3.2.

Note 3: Monitored value is the value of the parameter in binary code with sign in accordance with NAS-MD-790 Paragraph 3.3.4. If the data point is not a measurable parameter, a value of zero is used.

Note 4: Multiple alarms from a common logical unit may be included in a single message by providing Data Point ID, Condition Status and Monitored Value for each.

Alarm messages shall be transmitted to the MPS in response to any of the three types of polls. The RCE Concentrator shall poll all assigned RCE channels for messages and buffer them so that they will be available to relay to the MPS in response to the next poll.

2.4.2.2 Return-To-Normal (RTN) Message - The RTN message is used to convey that a previously reported alarm condition is no longer in an alarm state. The format for the RTN message and rules for its use are given in NAS-MD-790, paragraph 3.4.2. The format is identical to that of the alarm message except that the "Message Function Code" is an ASCII "B".

In its poll of RCE channels, the RCE Concentrator shall also collect RTN messages. These shall be relayed to the MPS in response to any poll along with any alarm messages.

2.4.2.3 State Change Messages - The state change message is used to report functions or parameters that are changed at a remote site as a result of RMMS or on-site operator action. The format and rules for use are as specified in NAS-MD-790, paragraph 3.4.3. This format is identical to that for the alarm message except that the "Message Function Code" is an ASCII "C".

The threshold level change message is a special case of the state change message. The format, also specified in NAS-MD-790, Paragraph 3.4.3, is similar to the state change message except that the "Message Function Code" is a lower case "c" and two bit fields are provided to report new high and low limit parameters.

State change messages shall be collected by the RCE Concentrator from its assigned channels and relayed to the MPS in response to any poll after any alarm or RTN messages.

2.4.2.4 Terminal Messages - The RCE is required to support a portable maintenance data terminal (MDT) at either the remote (Type I) or the control (Type II) facility.

One purpose is to exchange messages either with the MPS or through the MPS to another facility. These messages are used either to request reports of certain conditions or to initiate some action at another facility. A more complete discussion of MDT operation is provided in Section 7.

For purposes of interface definition, these messages may be considered to be free form except for format constraints required for data link operations. Characteristics and format shall be in accordance with NAS-MD-790, Paragraph 3.4.4. At the RCE Concentrator MPS interface, terminal messages flowing to or from the MPS will have the form:

FUNCTION	NUMBER OF BITS	FORMAT
Flag	8	0111 1110
Link Address	8	RCE Concentrator ID
Control Field	8	ON(S) FN(R)
RMS Address	8	RCE Channel ID
Logical Unit Address	8	ID for MDT - Note 1
Delimiter	8	0000 0000
Message Function Code	8	ASCII "I"
Message	Variable	Note 2
Frame Check Sequence	16	FCS
Flag	8	0111 1110

Note 1: The portable MDT logical unit address shall be hex 21.

Note 2: Specific formats to be defined by the contractor, subject to approval by the government.

Message length, including RCE channel ID, logical unit ID, delimiter, message function code and text of the message will not exceed 504 octets. Longer messages must be divided into blocks or pages of no more than 504 octets each. The RCE will not provide any labels, tags or sequence numbers solely to assure complete, in-sequence delivery, over and above those embedded in the ADCCP protocol. Terminal messages shall be collected by the RCE Concentrator along with other priority messages, and relayed to the MPS in response to any poll following the transmission of all other types of priority messages.

2.4.2.5 Command Error Message - If the RCE Concentrator should receive a message from the MPS that passes all formats and FCS checks, but is not interpretable, it shall generate a command error message in accordance with NAS-MD-790 Paragraph 3.5.2. This message shall have the following form at the RCE Concentrator/MPS interface:

FUNCTION	NUMBER OF BITS	FORMAT
Flag	8	0111 1110
Link Address	8	RCE Concentrator ID
Control Field	8	ON(S) FN(R)
RMS Address	8	RCE Channel ID
Delimiter	8	0000 0000
Message Function Code	8	ASCII "E"
Data Point Address	8	Data Point ID
Message Text	Variable	Note
Frame Check Sequence	16	FCS
Flag	8	0111 1110

Note: The message text shall be identical to the message from the MPS which could not be interpreted. If the message, including source, delimiter, and message function code should exceed 504 octets, it shall be truncated by deleting octets from the end so that the information field, including Source, Delimiter and Message Function Code will not exceed 504 octets.

The command error message shall be treated as a non-priority message. Non-priority messages shall be transmitted to the MPS in the sequence they were collected from lower levels in the communications hierarchy following the transmission of any pending priority messages.

2.4.2.6 Other Unsolicited Messages - Other unsolicited messages such as the Data Base Download Request, and Busy Status Message shall be provided if required by the RCE design. The format and use of such messages shall be in accordance with NAS-MD-790 Paragraph 3.5. These messages shall be considered non-priority messages and shall be transmitted along with other non-priority messages in the sequence they are collected from lower levels in the communications hierarchy.

2.4.3 Channel Data Report (CDR) - The CDR* is prepared in response to a scheduled or specific poll and is the means by which actual status and performance measurements of an RCE channel are sent to the MPS. A similar CDR shall be prepared by the RCE Concentrator to report any measurable parameters provided in its design.

The CDR in response to each scheduled poll message shall consist of several messages, one for each logical unit assigned to the channel ID. For a typical RCE channel the logical units are:

REMOTE SITE	CONTROL SITE
Transmitter 1	Basic Type II RCE Module
Transmitter 2	Common RCE Elements-Note 1
Transmitter 3	Trunk - Note 2
Transmitter 4	
Receiver 1	
Receiver 2	
Receiver 3	
Receiver 4	
Basic Type 1 RCE Modules	
Common RCE Elements - Note 1	
Trunk - Note 2	
Site Parameters or ERMS - Note 3	

Note 1: RCE elements which are common to multiple channels (such as the C1, E, and F modules, the Maintenance Panel and Power Subsystems) for which monitorable parameters are available, may be monitored by a IG module at the remote site, and corresponding elements at the control facility by

---

*The RCE is organized with an RMS embedded in each RCE channel. Since a channel does not encompass all RMMS capability at a site, and since the reporting capability covers functions at both the control site and the remote site, the term "Channel Data Report" was adopted as more descriptive of the coverage and is used in place of the term "Site Data Report" used in NAS-MD-790.

IIG Modules at that location. Alternatively, the common element parameters may be relayed through IE, IIE and IIF Modules for reporting through a special IIG Module capability in the RCE Concentrator. The common element parameters shall be reported as logical units and data points within the channel (RMS) indicated by the G Module assigned.

Note 2: Where the trunk is shared by multiple channels, the trunk parameters shall be reported as a part of the CDR for one of the channels as determined by the site adaptation data.

Note 3: Either Site parameters or ERMS Site Data Report shall be reported via one of the RCE Channels. The channel to which this function is assigned will be as established by site adaptation data.

The CDR in response to a specific poll, will consist of a single message reporting the parameters of the logical unit identified in poll message.

Each CDR message shall have the format specified in NAS-MD-790, Paragraph 3.6. Specifically for the RCE/MPS interface, these messages shall have the following format:

FUNCTION	NUMBER OF BITS	FORMAT
Flag	8	0111 1110
Link Address	8	RCE Concentrator ID
Control Field	8	O N(S) F N(R)
RMS Address	8	RCE Channel ID
Logical Unit Address	8	Logical Unit ID
Delimiter	8	0000 0000
Message Function Code	8	ASCII "G" Note 1
Availability Status	8	Note 2
Data	Variable	Note 3
Frame Check Sequence	16	FCS
Flag	8	0111 1110

Note 1: If the logical unit is not operating and therefore no data are available, a lower case ASCII "g" shall be used, followed immediately by the FCS.

Note 2: Availability status of the logical unit shall be indicated in accordance with NAS-MD-790 Paragraph 3.3.3.1

Note 3: Data points of a binary nature shall be reported through one octet each, in accordance with NAS-MD-790 Paragraph 3.3.3.2. Measurable parameters shall be reported following all binary data points. Each measurable parameter shall include one octet for condition status assigned in accordance with NAS-MD-790 Paragraph 3.3.3.2 followed by two octets for the value, which shall be coded as described in NAS-MD-790 Paragraph 3.3.4. Data, including the source RCE channel, logical unit, delimiter, message function code and availability status shall not exceed 504 octets.

Specific definition of the organization of the data field is shown in section 4.4.3.

2.4.4 Command Message - Command messages provide a means by which certain actions at remote facilities may be initiated from the MPS or from another location by relay through the MPS. The facility or RCE channel where the action is required is designated through the address fields of the message. The specific action to be taken is designated through the command code. Typical actions, their command codes and NAS-MD-790 references where further definitions may be found are:

ACTION	COMMAND CODE	NAS-MD-790 REFERENCE
Master Reset (clear all data samples)	hex 20	3.7.1
Startup/Recovery (clear data and restart)	hex 21	3.7.2
Start Engine Generator	hex 22	3.7.3
Stop Engine Generator	hex 23	3.7.4
Change Equipment Parameter	hex 24	3.7.5
Change Threshold	hex 25	3.7.6
Change Password	hex 26	3.7.7
Data Base Download	hex 27	3.7.8

Additional Command Codes shall be assigned, subject to approval by the government, as needed to control operation and the measurement of all performance parameters at on-line and off-line transmitters and receivers at remote sites.

Specific characteristics of the command messages may be found in NAS-MD-790, paragraph 3.7. The format of a command message as it appears at the MPS/RCE concentrator interface is:

FUNCTION	NUMBER OF BITS	FORMAT
Flag	8	0111 1110
Link Address	8	RCE Concentrator ID
Control Field	8	ON(S) PN(R)
RMS Address	8	RCE Channel ID
Logical Unit Address*	8	Logical Unit ID*
Delimiter	8	0000 0000
Message Function Code	8	ASCII "H"
Command Code	8	See Above
Additional Detail	Variable	Note
Frame Check Sequence	16	FCS
Flag	8	0111 1110

Note: Command message calling for a change of a parameter, threshold value or password require additional fields to specify the change. See NAS-MD-790, Paragraph 3.7 and subparagraphs for additional detail.

* Used only if the command is addressed to a specific logical unit.

3.0 INTERFACE WITH RMS CONCENTRATOR - It is anticipated that many control facilities will be equipped with an RMS Concentrator, an element of the RMMS. The RMS Concentrator will collect RMMS data from RMSs monitoring other systems, such as, the Navigation Systems, Radar Systems, and Airport Lighting Systems, as well as the RCE. At such facilities, the RCE shall interface with the MPS through the RMS Concentrator. This interface is illustrated in Figure 3-1.

This interface shall be similar to the RCE/MPS interface, using the microprocessor controlled RCE Concentrator to provide a common interface for multiple RCE channels at a common facility. This RCE Concentrator shall accept messages from the RMS Concentrator and relay them to the IIG module associated with the channel designated by address information in the message. It shall also accept messages from the various RCE channels, via the IIG modules, and relay them in sequence by priority to the MPS, via the common interface with the RMS Concentrator.

The RCE Concentrator shall maintain connectivity tables to associate channels with address information despite any switching or combining of channels in the IIC1 module.

The RCE Concentrator shall relay any messages sent from the MPS via the RMS Concentrator, to the specific IIG Module identified by address information in the message. In addition, it shall poll its associated IIG Modules to collect messages from them.

In response to a continuous poll message from the MPS, relayed through the RMS Concentrator, the RCE Concentrator shall send any messages it has stored since the previous poll. In response to a scheduled or specific poll, it shall respond with any messages collected since the previous poll and relay the polling message to the IIG module designated by the address fields in the polling message.

3.1 Mechanical Characteristics - The interface shall be in accordance with EIA Standard RS-232-C. The demarcation point shall be in a connection panel to be provided as part of the RCE Concentrator. The mechanical characteristics of this interface shall be identical to those described in Sections 2.1 and 2.1.1 above, except that the GFE cabling will be provided to an RMS Concentrator rather than the MPS.

3.2 Electrical Characteristics - The electrical characteristics shall be in accordance with EIA RS-232-C, as described in Section 2.2 and subparagraphs thereunder, except that the interface shall be with an RMS Concentrator instead of the MPS.

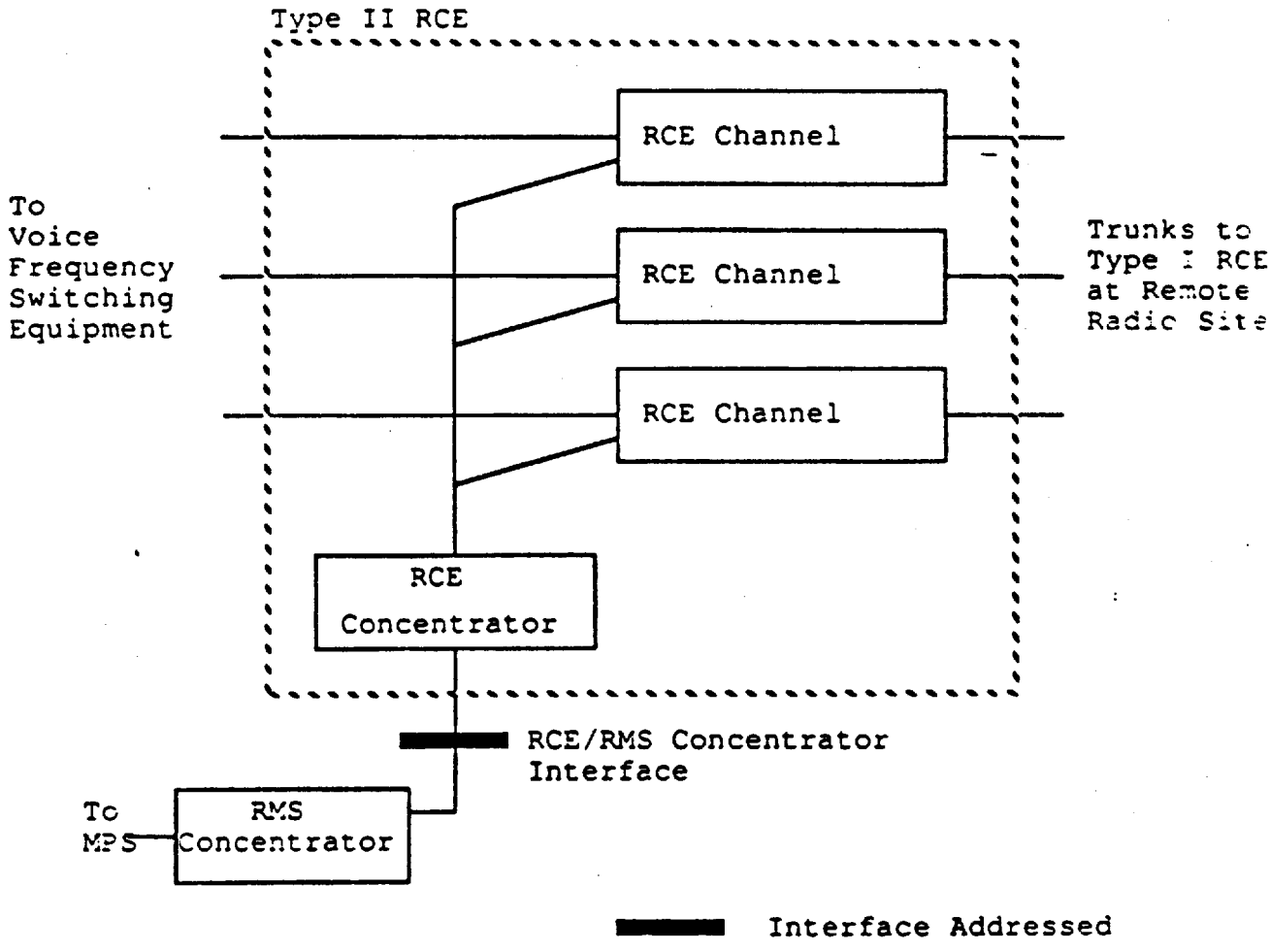

FIGURE 3-1

Functional Location of RCE/RMS Concentrator Interface

3.3 Data Exchange Protocol - Data transfer across the interface RCE Concentrator shall be controlled using the Advanced Data Communications Control Procedures (ADCCP), ANSI Standard BSR X3.66 as defined in the Remote Maintenance Monitoring System Interface Control Document (NAS-MD-790), Section 4, Bit-Oriented Data Link Procedures for Synchronous Communications.

The interpretation of these procedures, as applied to the RCE/RMS Concentrator shall be as described in Section 2.3, and subparagraphs, with the following exceptions:

"RMS Concentrator" should be substituted for "MPS" whenever it appears.

Since the RCE is separated from the MPS by the RMS Concentrator, the applicable address fields will be one level lower in the addressing hierarchy. However, since these additional address fields are added to or stripped from messages at levels of the communications hierarchy, above the RMS Concentrator/RCE Concentrator interface, they will never appear at this level. The message formats, therefore, will be identical to corresponding formats at the MPS/RCE Concentrator interface.

3.4 Message Format - Formats for messages crossing the interface shall be identical to those for the MPS interface, as described in Section 2.4 and subparagraphs.

4.0 RMMS RADIO EQUIPMENT INTERFACES - At remote radio sites, the Type I RCE shall monitor sensors associated with each channel's radio transmitters and receivers, to monitor their performance. The required interfaces are identified in Figure 4-1. The IG module in each RCE channel shall periodically scan its assigned sensors at least once each 5 seconds when requisite conditions permit, digitize and store measured values and compare them with high and low threshold values. If any should fall outside the acceptable range or indicate a state change over multiple scan cycles, the IG module shall generate an appropriate message to be sent to the MPS. Pre alarm filtering, the number of consecutive detections required before reporting an event (alarm condition or state change), shall be initially set in the IG by site adaptation, to require two (2) such detections. The quantity shall be adjustable for each parameter, to require as few as one (1) or as many as four (4) detections. The appropriate report message shall be generated and available for transmission from the IG module within two (2) seconds after the final detection. The time between occurrence of an event and its detection shall not exceed five (5) seconds, provided the operating state of the transmitter and/or receiver are such as to allow detection. The parameter measurements themselves shall be maintained in storage in such a manner that the latest measurements are always available. In response to a scheduled or specific poll, these measurements shall be organized into Channel Data Report (CDR)* format and submitted via the Type II RCE and the RCE Concentrator to the MPS.

In addition to the parameters related to the transmitters and receivers, the RCE shall monitor any RCE and communications trunk parameters that are provided by the other RCE modules and specific environmental and site security parameters specified in Section 6. The specific point of entry of these parameters into the RMMS channel elements (IG or IIG modules) and the specific role of the IG and IIG modules in reporting them shall be determined by the contractors and shall be subject to approval by the FAA.

Specific parameters for the RCE equipment, the acceptable range of operation for each and the specific format for reporting shall be developed by the contractors.

---

*The RCE is organized with an RMS embedded in each RCE channel. Since a Channel does not encompass all RMMS capability at a site, and since the reporting capability covers functions at both the control site and the remote site, the term "Channel Data Report" was adopted as more descriptive of the coverage and is used in place of the term "Site Data Report" used in NAS-MD-790.

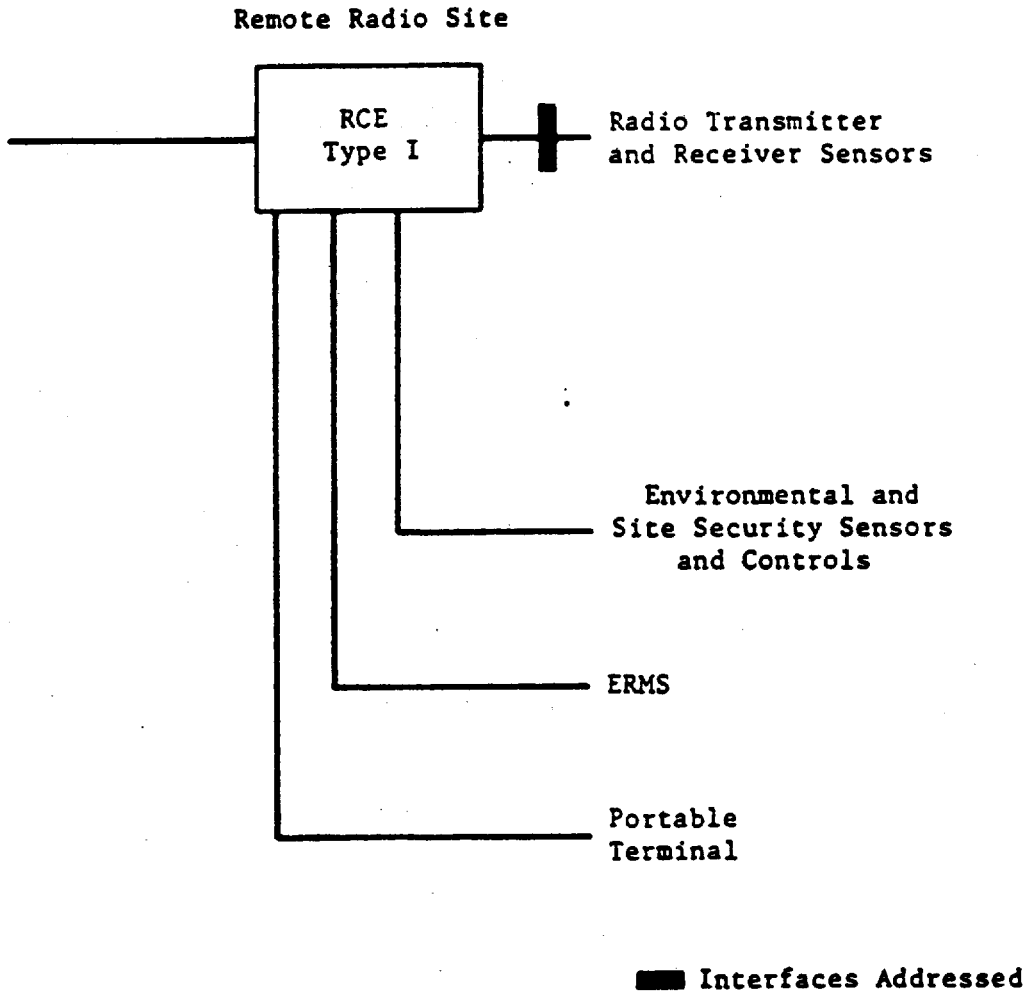

Figure 4-1
RCE/RMMS INTERFACES AT REMOTE RADIO SITES

The CDR shall consist of a series of messages, one for each logical unit as defined in section 2.4.3. In response to the scheduled poll, the RCE shall submit CDR messages for all its assigned logical units. The specific poll will request data regarding one logical unit; only one CDR message shall be submitted in response to such a poll.

At some installations the radio transmitters and receivers controlled by an RCE channel are located at physically separate remote radio (Type I) sites. Each RCE channel of this type will include a IG module at each remote site and a common IIG module at the control (Type II) facility, all designated by a single RMS address octet. Each IG module shall monitor the radio equipment sensors, RCE channel parameters and environmental and site security sensors assigned at its site, and generate CDR and other messages, each identified with a discrete logical unit octet. The IIG module shall gather messages from each associated IG module and relay them, together with any messages resulting from parameters that it monitors, to the MPS, via the RCE Concentrator.

Each channel is normally equipped with four (4) transmitters and four (4) receivers. Two (2) transmitters and two (2) receivers (main and standby) are fixed tuned to one frequency and the other pair of transmitters and receivers are fixed tuned to an associated frequency. Each transmitter generally consists of a single exciter unit which is capable of direct connection to an antenna. Where increased power levels are required, Linear Power Amplifiers (LPA) are provided, one for each exciter. Generally the two transmitters share a common antenna through use of an antenna transfer relay. Similarly, the two receivers share a common antenna through a transfer relay. The transmitters and receivers are mounted in standard 19" equipment racks.

In addition to monitoring the performance of current solid state radio transmitters and receivers, the RCE shall be capable of monitoring the performance of tunable transceiver equipment as described in Department of Transportation, Federal Aviation Administration Specification, Radio Control Equipment (RCE), FAA-E-2738A. The interface characteristics for performance sensors associated with this equipment will be provided when such information is available. In the meantime, design of the RCE shall be based on the assumption that the tunable transceiver RMMS parameters to be monitored will be the same as those for the currently installed radio transmitters and receivers, that the voltage range for each sensor will be the same as that for the corresponding sensor in the current equipment, but that the characteristic curves will be representative of a new family of sensors.

The sections that follow specify the physical and electrical characteristics for the transmitter and receiver interfaces. Information is then provided on the format of the messages involved. Information in

this section is limited to performance sensing for RMMS. Interface data on the voice interfaces and the control interfaces required to operate the transmitters and receivers are provided in the RCE/Radio Equipment Interface Requirements Document RCE-540-001, Appendix C of FAA-E-2738A.

4.1 Mechanical Characteristics - The sensors that monitor the performance of the transmitters and receivers are located in or near the unit they monitor.

The interface shall be located at a connection block to be furnished by the contractor and located in the radio equipment racks. Connections from the transmitter and receiver equipment to the connection block will be provided by the government.

Connections between the RCE modules and the connection block shall be provided by the contractor.

4.2 Electrical Characteristics - The following paragraphs list the interface signals to be monitored and the connector and pin where each signal may be found in the subject transmitter or receiver (where applicable). The meaning of each sensor is given together with its electrical characteristics and constraints on the conditions under which readings may be taken. The characteristics of each sensor is given as well as the threshold limits for normal operation.

Design of the monitoring circuitry in the RCE shall assure that it will not present a significant load to the radio equipment sensors. The monitoring capability shall use analog to digital conversion with sufficient resolution to provide at least 1000 steps in its range of operation. For data points with 0 to 10 volt DC inputs the measurement error shall not exceed 20 millivolts; for 0 to 20 volt DC inputs, the measurement error shall not exceed 128 millivolts; for 0 to 32 volt DC inputs, the measurement error shall not exceed 240 millivolts; and for resistive sensors, the measurement error shall not exceed 10 ohms. The values reported in CDR messages shall be to the full accuracy and resolution indicated above for each type of input and shall be converted to the units of the parameter being measured. Conditioning circuits for the sensors shall be designed so that, by changing the components that comprise the conditioning circuits, future sensors with different voltage ranges may be accommodated.

4.2.1 PTT Status - PTT Status (Exciter J5-Pin M) provides an indication that a particular exciter unit is being keyed. The signal is used to establish the appropriate time to take readings of other parameters such as Forward Power, Reflected Power, and Modulation Level, which can only be measured

when the transmitter is actually transmitting. This signal is also used to provide an indication of the amount of use the particular transmitter has had.

4.2.1.1 Signal Characteristics - The RCE shall provide a load of 100,000 ohms +/- 10 percent between the PTT Status line (J5-Pin M) and Signal Ground (J5 Pin A). With this loading, a voltage of 11.2 volts or less on the PTT Status line shall be interpreted as indicating that the exciter is being keyed. A voltage of 14.5 volts or more shall be interpreted as indicating that the exciter is idle. A voltage measurement greater than 11.2 volts and less than 14.5 volts shall be interpreted as an alarm condition. If such a condition persists over multiple monitoring cycles (pre-alarm filtering) an alarm message with condition status code B, shall be initiated.

4.2.1.2 Interpretation - A software counter, capable of counting up to at least 32,0000 operations, shall be maintained in memory for each assigned transmitter. Each time a new PTT for a transmitter is indicated by a transition of its PTT Status signal from the unkeyed to the keyed state, the counter for that transmitter shall be incremented. Each counter shall be reset each time a CDR for its related transmitter is generated in response to a Schedule or Specific Poll. Thus, each counter will indicate the number of PTT occurrences since the last CDR. This information shall be maintained for use in the next CDR message. The PTT Status signal is also used as a requisite for measuring other parameters which are meaningful only when the transmitter is transmitting.

4.2.2 Exciter Only/LPA Operation - The Exciter Only/LPA Operation signal (Exciter J5-Pin G) provides an indication that the exciter is operating without the Linear Power Amplifier (LPA) or that it is operating in conjunction with the LPA. In some installations the LPA is not present and the exciter is connected directly to the antenna, providing an effective power output level of up to 10 watts. In such installations this signal will always indicate Exciter Only operation. Where additional power is needed to provide sufficient transmitting range for effective communications, a LPA is used to boost the output power to up to 50 watts. When the LPA is used the signal will indicate LPA Operation. The LPA is equipped with a temperature sensor that will turn off its power if the unit should become overheated. In the event this occurs, the antenna is automatically switched to the exciter so that operation may continue at the lower power level, and the Exciter Only/LPA Operation signal indicates Exciter Only operation.

4.2.2.1 Signal Characteristics - A voltage of 2.0 v DC or more indicates Exciter Only operation. A voltage of 1.0 v or less indicates that the LPA is in use. A voltage greater than 1.0 and less than 2.0 volts shall be interpreted as an alarm condition and shall cause an alarm message with condition status code B, to be indicated if the condition persists.

4.2.2.2 Interpretation - The RCE shall monitor the Exciter Only/LPA Operation signal and store the indication. This information shall be used to determine the applicability of the LPA parameters and shall be reported in the CDR as the LPA status. If a change from LPA Operation to Exciter Only operation should be detected, an alarm message shall be generated. A change from Exciter Only operation to LPA Operation shall cause a Return-to-Normal (RTN) message to be generated. The formats for these messages shall be in accordance with Sections 4.4.2.1 and 4.4.2.2.

4.2.3 Exciter Forward Power - This sensor (Exciter J5-Pin E) provides a measure of forward power from the exciter to the transmitter antenna or to the Linear Power Amplifier (LPA). The Exciter Forward Power shall be measured only when the equipment is being keyed, as indicated by the PTT Status indication (Section 4.2.1).

No power measurements shall be made for a preset time following the recognition of the PTT condition. This time delay shall be adjustable in steps of 0.25 second over a range from 0.5 to 3.0 seconds. Initially this time delay shall be set at 1.0 second as part of the adaptation data, but this value shall be adjustable by message entry from a portable MDT located either at the facility or at a remote location.

Due to the presence of audio on the sensor output, a filter is required which reduces a 0.3 VAC, 300 Hz signal to 0.001 VAC or less. The filter must not delay the DC step voltage more than 0.8 seconds and shall not attenuate the steady state DC voltage by more than 0.001 VDC. The filter shall not overload the 300 OHM source and must be commensurate with the input resistance of the analog to digital converter. The filter characteristics shall remain constant throughout the environmental conditions specified for the remote RCE site.

4.2.3.1 Signal Characteristics - The Exciter Forward Power sensor will present a voltage ranging from 0 to 1.3 VDC with respect to Signal Ground (J5-Pin A). Sensor impedance level is 300 ohms +/- 5 percent. The conversion of sensor voltage to power shall be in accordance with Figure 4-2.

4.2.3.2 Interpretation - The value for this parameter shall be stored each time it is measured, for reporting later in the CDR message. Only the latest measurement need be maintained in storage. The measurement shall be to the full accuracy and resolution for 0 to 10 volt data points and converted to watts as specified in Section 4.2.

Each time the Exciter Forward Power is measured it shall be compared with upper and lower threshold limits to be separately stored for each transmitter. Normally the lower limit will be in the range from 5 to 10 watts and the upper limit will be in a range from 10 to 15 watts. These threshold limits will be initially established as adaptation data, however provision shall be made to allow maintenance personnel to change them using a portable MDT either locally or from a remote facility. If the Exciter Forward Power should fall outside the set threshold limits an alarm message shall be initiated, following the format and rules in Section 4.4.2.1.

4.2.4 Exciter Reverse Power - The Exciter Reverse Power sensor (Exciter J5 Pin K) provides a measure of the power reflected from the transmitter antenna or LPA. Like Exciter Forward Power, this parameter shall be measured only when the transmitter is being keyed, as indicated by the PTT Status signal (Section 4.2.1). No power measurements shall be made for a preset time as indicated for Exciter Forward Power, Section 4.2.3 above.

Due to the presence of audio on the sensor output, a filter, as described in Section 4.2.3 shall be provided to assure satisfactory measurements.

4.2.4.1 Signal Characteristics - The Exciter Reverse Power sensor will present a voltage ranging from 0 to 0.5 volt, with respect to Signal Ground (J5 Pin A). The sensor impedance is 300 ohms +/- 5% resistive. Conversion of sensor voltage to power shall be in accordance with Figure 4-3 or 4-4. Figure 4-3 is applicable to VHF transmitters and Figure 4-4 to UHF transmitters.

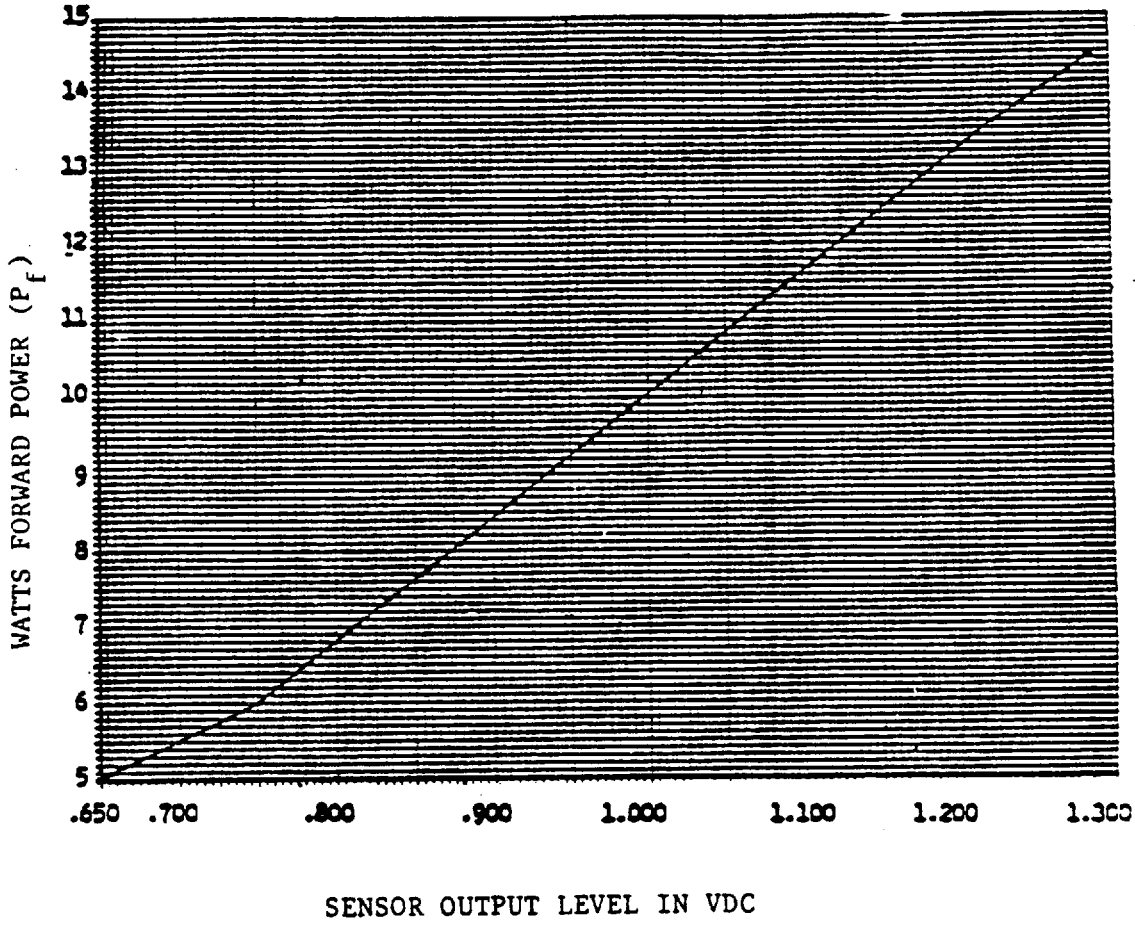

Sensor output impedance is 300 ohms, resistive ±5 percent.

FIGURE 4-2
VHF AND UHF FORWARD POWER SENSOR CHARACTERISTICS

4.2.4.2 Interpretation - The Reflected Power level, together with the Exciter Forward Power level shall be used to calculate Voltage Standing Wave Ratio (VSWR) using the formula:

$$\text{VSWR} = \frac{1 + \sqrt{\dfrac{\text{Reverse Power}}{\text{Forward Power}}}}{1 - \sqrt{\dfrac{\text{Reverse Power}}{\text{Forward Power}}}}$$

The VSWR may range from 1.0 to 4.0. The results of the VSWR calculation or data from which VSWR may be calculated shall be stored for later use in the channel data report. The CDR item to be reported shall be the VSWR calculation which shall be expressed in steps of 0.1 or less. Only the latest measurements need be maintained in storage.

Each time the power levels are measured and VSWR calculated, the VSWR shall be compared with upper and lower threshold limits to be separately stored for each transmitter. Normally the lower limit will be in the range from 1.0 to 1.1 and the upper limit will range from 1.5 to 4.0. The threshold limits will be initially established as adaptation data, however, provision shall be made to allow maintenance personnel to change them using a portable MDT either locally or from a remote facility. If the VSWR should fall outside the acceptable range of operation as defined by the threshold limits, the RCE shall initiate an alarm message following the format in Section 4.4.2.1, and transmit it in response to the polling procedures described in Section 2.

4.2.5 LPA Forward Power - Sensors will be provided to measure forward power when an LPA is used. LPA Forward Power shall be measured when the equipment is being keyed, as indicated by the PTT Status signal (Section 4.2.1) and the equipment is in LPA Operation as evidence by the Exciter Only/LPA Operation signal (Section 4.2.2).

Initial power measurements shall be delayed for a preset time as indicated for Exciter Forward Power, (Section 4.2.3).

The sensor output shall be filtered to avoid problems with audio content (Section 4.2.3).

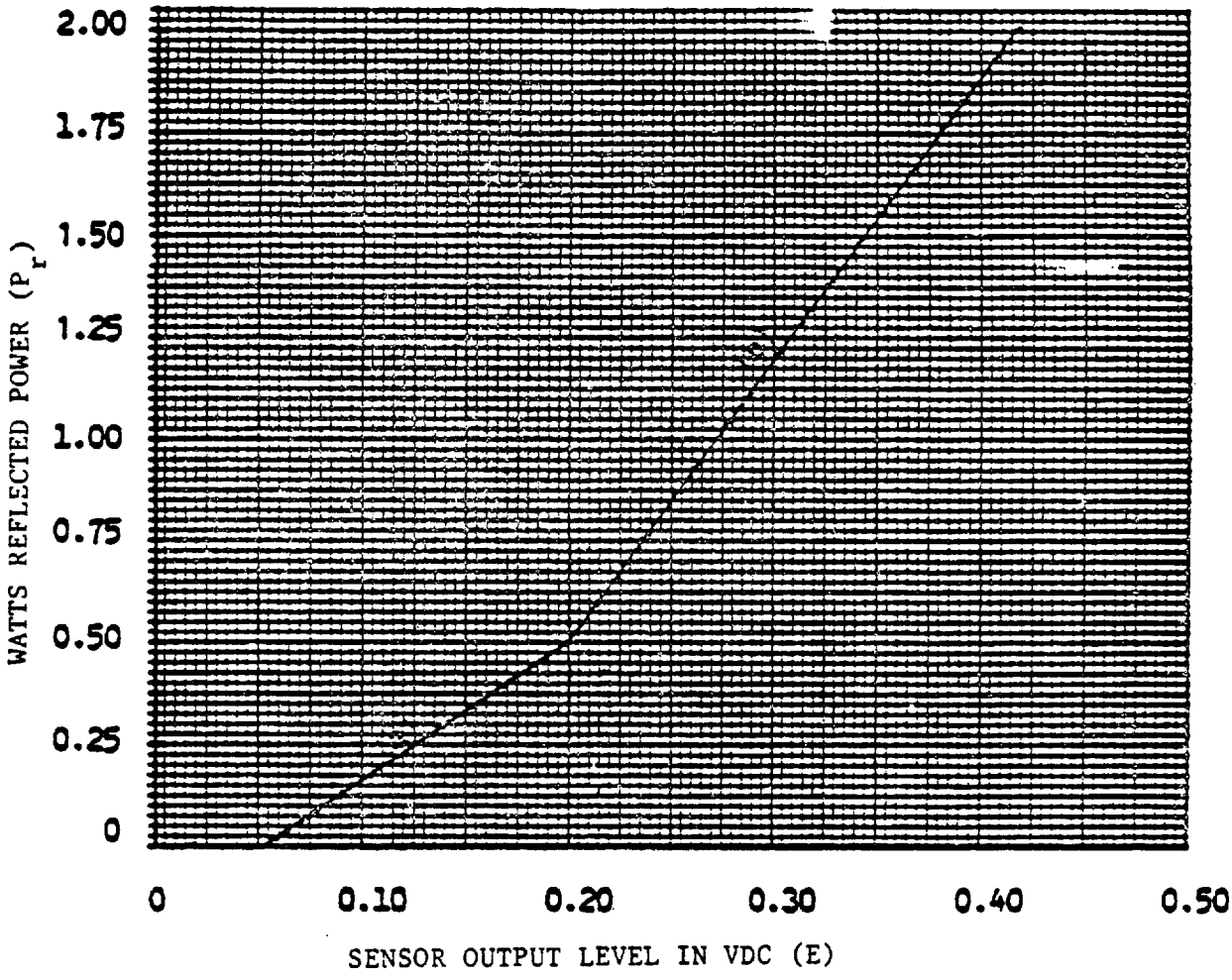

Sensor output impedance is 300 ohms, resistive ± 5 percent.

FIGURE 4-3
VHF REFLECTED POWER SENSOR CHARACTERISTICS

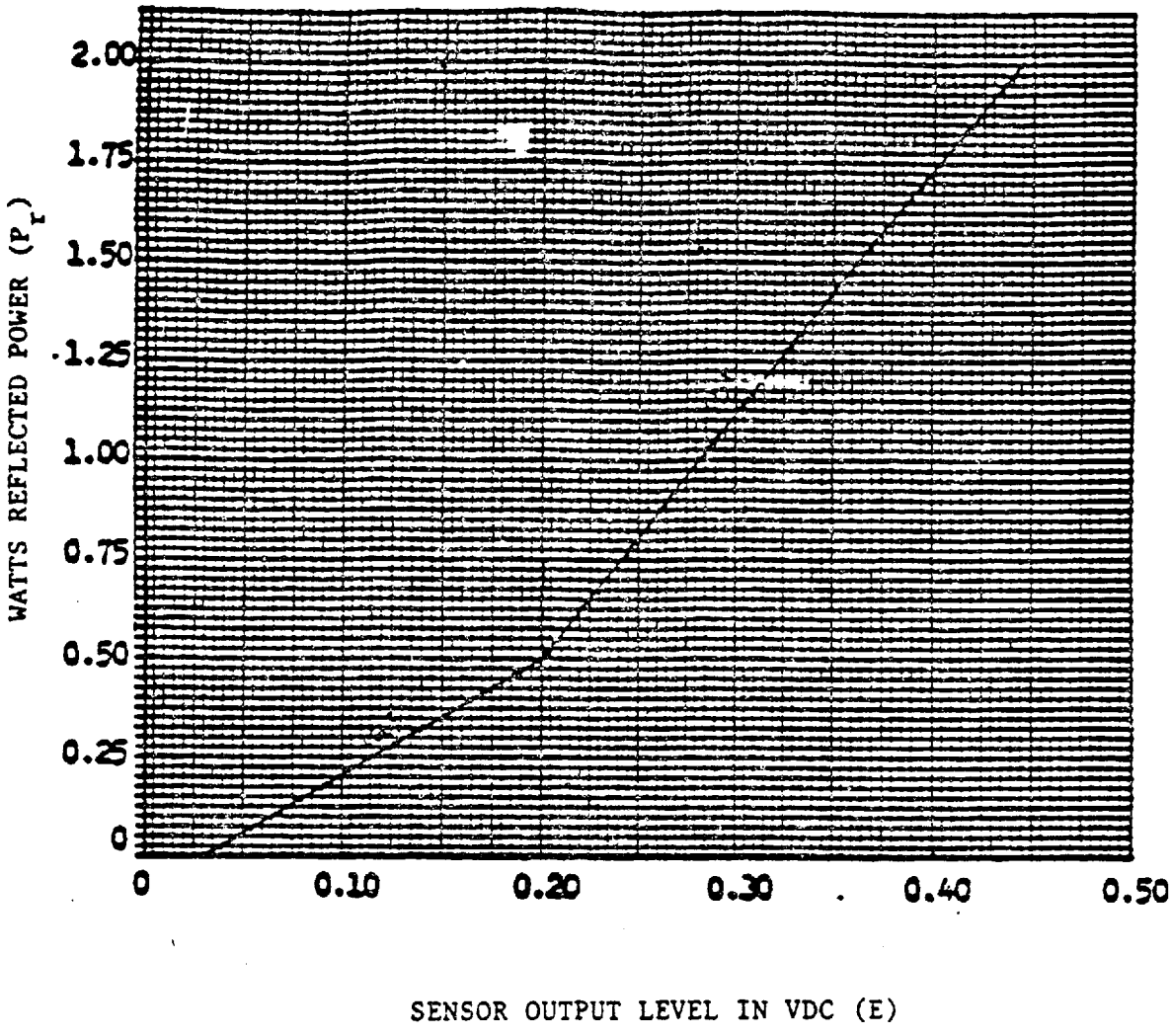

Sensor output impedance is 300 ohms, resistive ±5 percent.

FIGURE 4-4
UHF REFLECTED POWER SENSOR CHARACTERISTICS

4.2.5.1 Signal Characteristics - A sensor in the antenna line from the LPA will be provided to measure forward power. This sensor will have characteristics similar to those of the Exciter Forward Power sensor. The RCE (IG Module) design shall provide sufficient flexibility to be adapted to a variety of characteristic curves so that the measurement capability may be incorporated when the sensors are provided.

4.2.5.2 Interpretation - The RCE shall store the power level measurement for later use in a channel data report. Only the latest measurement need be maintained in storage. The measurement shall be to the full accuracy and resolution and converted to watts as outlined in Section 4.2.

Each time the LPA Forward Power level is measured, it shall be compared with upper and lower threshold limits to be separately stored for each transmitter. Normally the lower limit will be in the range from 30 to 50 watts and the upper will range from 50 to 61 watts. The threshold limits will be initially established as adaptation data, however, provision shall be made to allow maintenance personnel to change them using a portable MDT either locally or from a remote facility. If the LPA Forward Power should fall outside the acceptable range of operation as defined by the threshold limits, the RCE shall initiate an alarm message following the format in Section 4.4.2.1 and transmit it in response to the polling procedures described in Section 2.

4.2.6 LPA Reverse Power - Sensors will be provided to measure reverse power when the LPA is used. LPA Reverse Power shall be measured when the equipment is being keyed, as indicated by the PTT Status Signal (Section 4.2.1), and the equipment is in LPA Operation as evidenced by the Exciter Only/LPA Operation signal (Section 4.2.3).

Initial power measurements shall be delayed for a preset time as indicated under Exciter Forward Power (Section 4). The sensor output shall be filtered to avoid potential problems with audio content (Section 4.2.3).

4.2.6.1 Signal Characteristics - A sensor in the antenna line from the LPA will be provided to measure LPA Reverse Power. This sensor will have characteristics similar to those of the Exciter Reverse Power sensor. The RCE (IIG Module) design shall provide sufficient flexibility to allow it to be adapted to a variety of characteristic curves so that the measurement capability can be incorporated when the sensors are provided.

4.2.6.2 Interpretation - The readings from the LPA Reverse Power sensor shall be converted to a power level and used, together with the LPA Forward Power to calculate VSWR using the formula:

$$\text{VSWR} = \frac{1 + \sqrt{\dfrac{\text{Reverse Power}}{\text{Forward Power}}}}{1 - \sqrt{\dfrac{\text{Reverse Power}}{\text{Forward Power}}}}$$

The VSWR may range from 1.0 to 4.0. The results of the VSWR calculation or data from which the VSWR may be calculated shall be stored for later use in the channel data report. The CDR item to be reported shall be the VSWR calculation which shall be expressed in increments of 1.0 or less. Only the latest measurements shall be maintained in storage.

Each time the power levels are measured the VSWR shall be calculated and compared with upper and lower threshold limits to be separately stored for each transmitter. Normally the lower limit will be in the range from 1.0 to 1.1 and the upper limit will range from 1.5 to 4.0. The threshold limits will be initially established as adaptation data, however, provision shall be made to allow maintenance personnel to change them using a portable MDT either locally or at a remote facility. If the VSWR should fall outside the acceptable range of operation as defined by the threshold limits, the RCE shall initiate an alarm message following the format in Section 4.4.2.1 and transmit it in response to the polling procedures described in Section 2.

4.2.7 Voice Frequency (VF) Input Level - The VF Input level sensor (Exciter J5 Pin P) provides a measure of the level of the voice frequency input to the exciter. This level shall be monitored only when the exciter is being keyed. The keyed state is recognized by presence of the PTT Status signal (Section 4.2.1). Due to the presence of audio in the sensor output, a filter with characteristics described in Section 4.2.3 shall be provided to assure satisfactory measurements.

4.2.7.1 Signal Characteristics - The voltage appearing on this sensor will vary within a range from 0 to +5 VDC. The voltage will be a function of the audio level of the voice signal that is modulating the transmitter. The sensor impedance level is 300 ohms +/- 5%. Conversion of sensor readings to volts and dBm shall be in accordance with Figure 4-5.

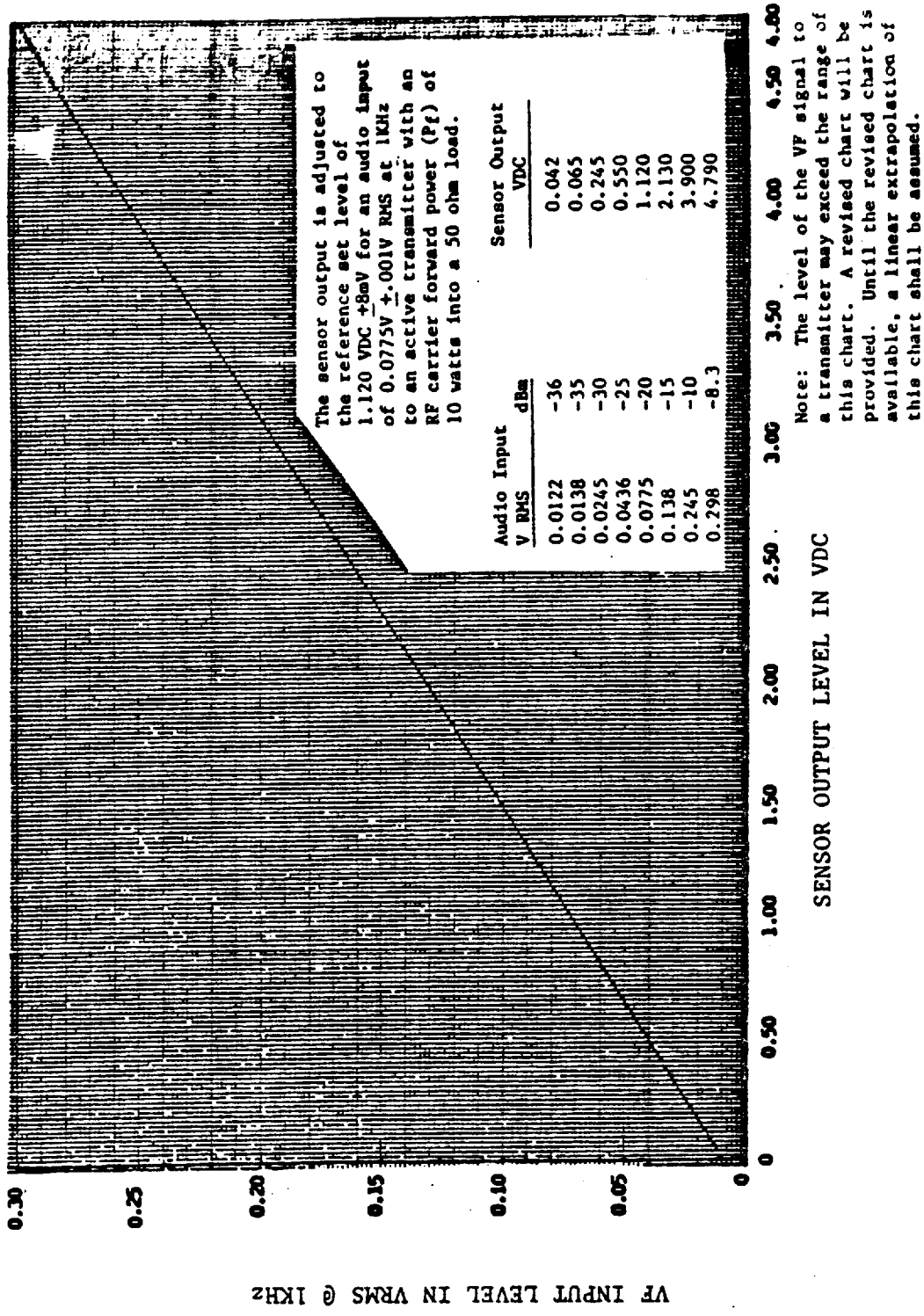

Note: The level of the VF signal to a transmitter may exceed the range of this chart. A revised chart will be provided. Until the revised chart is available, a linear extrapolation of this chart shall be assumed.

FIGURE 4-5
VF INPUT SENSOR CHARACTERISTICS

4.2.7.2 Interpretation - Suitable filtering shall be provided to cause the reading of VF Input level to represent the level integrated over a 0.5 sec time period. This time period shall be adjustable if testing should show a different integration time to be more appropriate. The readings from the sensor shall be stored for later use in the channel data report. Only the latest measurement shall be maintained in storage. The measurement shall be to the full accuracy and resolution for 0 to 10 volt data points and converted to dBm as specified in Section 4.2.

Each time the VF Input Level is measured, it shall be compared with upper and lower threshold limits to be separately stored for each transmitter. Normally the lower limit will be in the range from -36 to -10 dBm and the upper limit will be in the range from -25 to -8 dBm. The threshold limits will be initially established as adaptation data, however, provision shall be made to allow maintenance personnel to change them using a portable MDT either locally or at a remote facility. If the VF Input level should fall outside the acceptable range of operation as defined by the threshold limits, the RCE shall initiate an alarm message following the format in Section 4.4.2.1, and transmit it in response to the polling procedures described in
Section 2.

4.2.8 Percent Modulation - The Percent Modulation sensor (Exciter J5-Pin L) is included in the Exciter to provide a means for measuring the modulation level. This measurement shall be made when the transmitter is being keyed as indicated by the PTT Status signal (Section 4.2.1) and the VF Input Level (Section 4.2.7) is greater than a prescribed level. The specific level for this criterion shall be initially set to -15 dBm by site adaptation, but shall be adjustable by local input from a portable terminal or by message from a terminal at another location. Due to the presence of audio in the sensor output, a filter with characteristics described in Section 4.2.3 shall be provided to assure satisfactory measurements.

4.2.8.1 Signal Characteristics - The voltage appearing at this sensor interface will vary within a range from 0 to +5 VDC. The voltage at any time will be a function of the audio level of the voice signal that is modulating the transmitter. The sensor impedance level is 300 ohms +/- 5%. Conversion of sensor voltage to percent modulation shall be in accordance with Figure 4-6.

4.2.8.2 Interpretation - Data from the sensor, shall be stored for later use in the channel data report. Only the latest measurement shall be maintained in storage. The measurement shall be to the full accuracy and resolution for 0 to 10 volt data points and converted to percent for reporting as specified in Section 4.2.

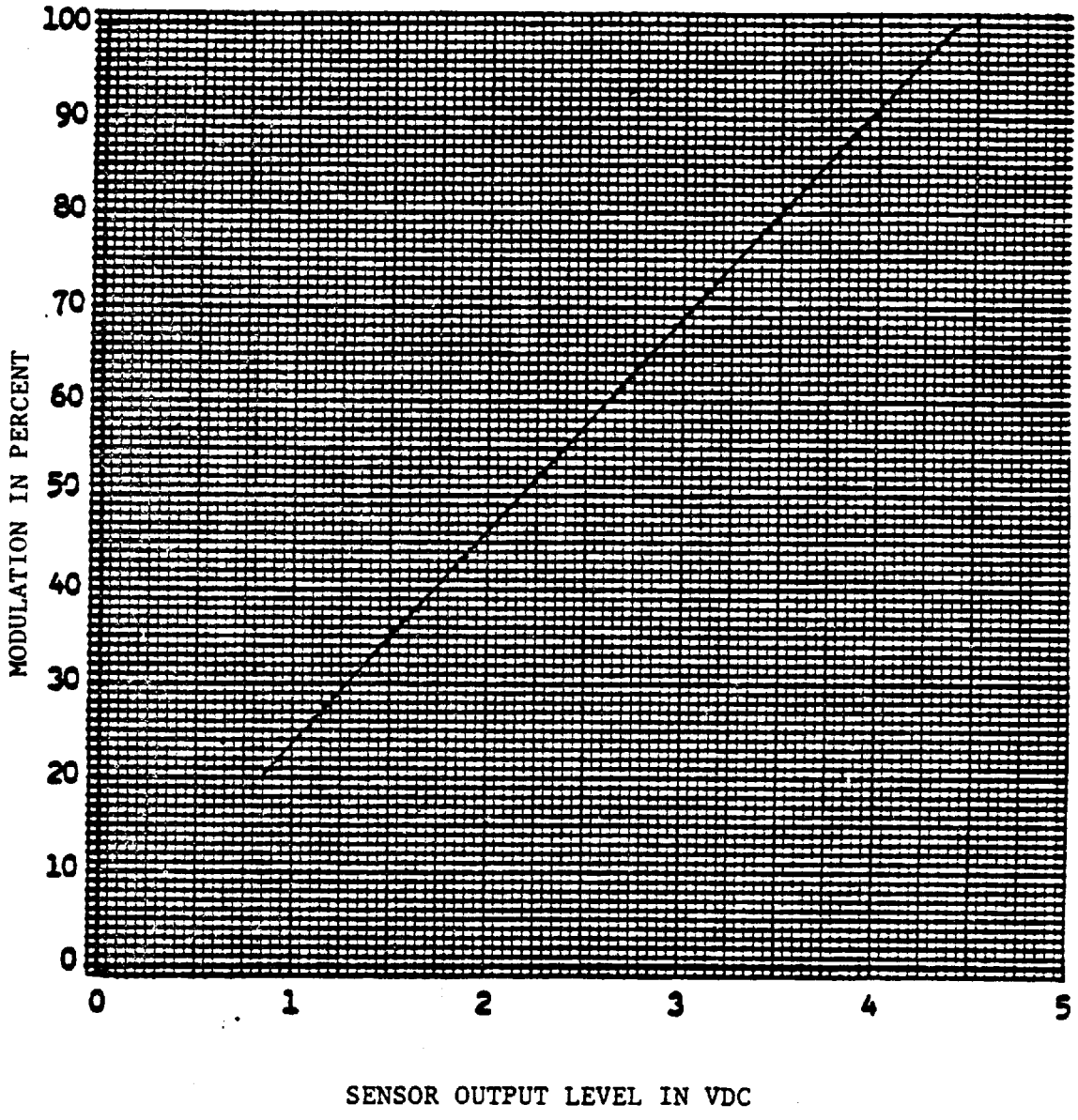

FIGURE 4-6
PERCENT MODULATION SENSOR CHARACTERISTICS

Each time the Percent Modulation level is measured, it shall be compared with upper and lower threshold limits to be separately stored for each transmitter. Normally the lower limit will be in the range from 20 percent to 80 percent and the upper limit will range from 80 percent to 100 percent. The threshold limits will be initially established as adaptation data, however, provision shall be made to allow maintenance personnel to change them using a portable MDT either locally or at a remote facility. If the Percent Modulation should fall outside the acceptable range of operation as defined by the threshold limits, the RCE shall initiate an alarm message following the format in Section 4.4.2.1 and transmit it in response to the polling procedures described in Section 2.

4.2.9 Main/Standby Transmitter Transfer - The main/Standby Transmitter Transfer signal (RCE Terminal Strip - Pins F17 and F18) indicates which transmitter has been selected . The signal is used primarily to control the antenna transfer relay which connects a common antenna to the appropriate transmitter. The signal shall also be used to identify the selected transmitter, information needed for use in the channel data report.

4.2.9.1 Signal Characteristics - A voltage level of 2.0 volts or less on Pin F17, as referenced to Pin F18, shall be interpreted as an indication that the transmitter normally used (number 1 or main transmitter) has been selected. A voltage level of +20.0 volts or more shall be interpreted as indicating that the other transmitter (number 2 or standby transmitter) has been selected as the active unit. A voltage level greater than 2.0 volts and less than 20.0 volts shall be interpreted as an alarm condition and shall cause an alarm message with condition status B, to be generated if the condition persists over multiple cycles (prealarm filtering).

4.2.9.2 Interpretation - The Main/Standby Transmitter Transfer signal indication shall be stored each time it is examined. Only the latest indication shall be maintained in storage. Each time a change is detected, a pair of state change messages, one for each transmitter, shall be generated. The format of these messages shall be in accordance with Section 4.4.2.3 and they shall be transmitted in response to polling as described in Section 2. This information shall also be used to determine the availability status as required in each CDR message relating to each transmitter as a logical unit.

4.2.10 AGC Voltage - The AGC voltage is brought out from each receiver (Receiver J2 Pin F) and shall be measured simultaneously with or immediately following the measurement of Percent Modulation (Section 4.2.8) of the exciter currently in use for the same frequency. If keying of the associated exciter should terminate while this measurement is being taken, the measurement shall not be used. This signal may have to be filtered to avoid measurement problems resulting from audio content (see Section 4.2.3).

4.2.10.1 Signal Characteristics - The voltage appearing at this point, as referenced to the Receiver Ground, J2 Pin B or H, will range between 0 and +10 v DC depending on the signal strength of the RF signal from the associated transmitter.

4.2.10.2 Interpretation - The RCE shall store the AGC level measurement for later use in the channel data report. Only the latest measurement need be maintained in storage. This measurement shall be to the full resolution specified in Section 4.2 for 0 to 10 volt data points.

Each time the AGC Level is measured, it shall be compared with upper and lower threshold limits to be separately stored for each receiver. Normally the lower limit will be in the range from 5 to 9 volts and the upper limit will be in the range from 7 to 10 volts. the threshold limits will be initially established as adaptation data, however, provision shall be made to allow maintenance personnel to change them using a portable MDT either locally or from a remote facility. If the AGC Level should fall outside the acceptable range of operation as defined by the threshold limits, the RCE shall initiate an alarm message following the format in Section 4.4.2.1 and transmit it in response to the polling procedures described in Section 2.

4.2.11 VF Output Level - Voice Frequency Output Level (Receiver J2, Pins C,D) shall be monitored for each on-line receiver and shall be measured concurrently with or following the measurement of Percent Modulation (Section 4.2.8) of the exciter currently in use for the same frequency and AGC voltage. If keying of the associated transmitter should terminate while this measurement is being taken, the measurement shall not be used.

4.2.11.1 Signal Characteristics - This signal is the audio signal delivered to the IB1 RCE module. The signal is balanced and appears between pins C and D of the J2 connector. The IB1 module interface to the radio is established in FAA-E-2738. However, for the purpose of RMMS measurements on the radio, the IG module shall account for a greater range of variance than those provided for the IB1 module in FAA-E-2738. The VF Output Level will vary over a range from -40 dBm to +20 dBm depending on the audio input level, and modulation level adjustment of the transmitter originating the signal, as well as adjustments in the receiver.

4.2.11.2 Interpretation - Suitable filtering shall be provided for the VF output level sensor to cause the reading to represent the level integrated over a 0.5 sec time period. This time period shall be adjustable if testing should show a different integration time to be

more appropriate. The RCE shall store the resulting measurement for later use in the channel data report message. Only the latest measurement need be maintained in storage. Measurement shall be to the accuracy and resolution and converted to dBm as specified in Section 4.2.

Each time the VF Output Level is measured, it shall be compared with upper and lower threshold limits to be separately stored for each receiver. Normally the lower limit will be in the range from -40 dBm to 0 dBm and the upper limit will range from -20 dBm to +20 dBm. The threshold limits will be initially established as adaptation data, however, provisions shall be made to allow maintenance personnel to change them using a portable MDT either locally or at a remote facility. If the VF Output Level should fall outside the acceptable range of operation as defined by the threshold limits, the RCE shall initiate an alarm message following the format in Section 4.4.2.1 and transmit it in response to the polling procedures described in Section 2.

4.2.12 Off-Line Receiver Tests - Each Type I RCE shall include the capability to activate any off-line receiver with a locally generated test signal. Selection of the receivers for test and frequency assignments for signal generation shall be controlled by test routines stored locally. The test routines shall assure that each off-line receiver is tested at least once each 20 seconds unless operating conditions identified in Section 4.2.12.3 cause the routines to be interrupted. Measurements shall be made and interpreted in accordance with the following procedure.

4.2.12.1 Measurement and Interpretation of (S+N)/N - A fixed level unmodulated 6.0 +/- 1.0 microvolt RF signal shall be applied to the antenna input of an off-line receiver and the VF output shall be terminated in a 600 ohm resistive load. This signal shall be applied to the receiver for approximately a 0.5 second period, and the receiver's VF output (N) shall be measured. If the Squelch Break signal (RCE Terminal Strip Pin F-23 as referenced to Pin F-24) for this radio does not change to the "unsquelched" state, the test shall be abandoned and an alarm message with Condition Status "C" shall be initiated. In another 0.5 second period, immediately following, a 6.0 +/- 1.0 microvolt RF signal that is modulated 30 +/- 5 percent by a 1000 Hz +/- 3% test tone (sine wave with no more than 5 percent distortion) shall be applied, and the resulting VF output (S+N) measured. The RF Signal Generator Output Monitoring Point voltage and AGC voltage (Receiver J2, Pin F) shall also be measured, and Squelch Break signal shall be monitored during each time period as needed for further analysis and/or reporting. Each voltage measurement shall be accurate to the full resolution of the measurement as outlined in Section 4.2 of this document.

The two VF output values shall be used to compute, store and report the value of (S+N)/N in dB. The dB value shall be computed as follows:

$$dB = 20 \log 10 \ [(S+N)/N]$$

The RCE shall store the resulting computation, together with measurements of the RF Signal Generator Output Monitor Point voltage, AGC voltage and VF output voltage that are to be used in the CDR. Only the latest data shall be maintained in storage. The (S+N)/N parameter as reported in the CDR shall be in dB, in increments of 0.5 dB or less.

Each time the (S+N)/N ratio is computed, it shall be compared with upper and lower threshold limits to be separately stored for each receiver. Normally the lower limit will be in the range from 5 dB to 30 dB, and the upper limit will be in the range from 30 dB to 40 dB. The threshold limits will be established as adaptation data, however, provision shall be made to allow authorized maintenance personnel to change them using a MDT either locally or from a remote facility. If the (S+N)/N ratio should fall outside the acceptable range of operation as defined by the threshold limits, the RCE shall initiate an alarm message to be sent to the MPS.

4.2.12.2 Measurement of Certification Parameters - During a third 0.5 second time period, a 50.0 +/- 8.33 microvolt RF signal, modulated 30 +/- 5 percent by a 1000 Hz +/- 3% test tone shall be applied to the antenna input of the receiver under test. Measurements of the RF Signal Generator Output Monitor Point voltage, AGC voltage and VF output voltage shall be made. Measurements taken during the three time periods shall be accurate tot he full resolution of the measurements as outlined in Section 4.2. These voltage measurements shall be stored for use in the CDR. Only the latest set of measurements or computations shall be maintained in storage.

If the RF Signal Generator Output Monitor Point voltage measured during any of the three time periods should indicate a deviation of power level of more than 1.3 dB from the power level established and stored during certification, an alarm message shall be initiated to be sent to the MPS, and the associated measurements shall be disregarded. All alarm messages shall be in the format described in Section 4.4.2.1, and shall be transmitted following the procedure described in Section 2.

If the signal generator output is determined to be within the established operating range, the AGC voltage and the VF output voltage measurements, taken during the first and third time periods, shall be compared with the high and low thresholds established during certification. If any of these measurements should fall outside the range established during certification, an alarm message shall be generated and transmitted to the MPS.

During each time period, the Squelch Break signal from the receiver under test shall be monitored to provide a check of the Squelch Break function. During each RF application the signal should go to the "unsquelched" state as indicated by a voltage of 8.0 volts or more on RCE terminal strip, Pin F-23 as referenced to Pin F-24. If the signal remains in the "squelched" state, as indicated by a voltage of 1.0 volt or less, an alarm message with Condition Status "C" shall be generated. If the voltage should be greater than 1.0 volt and less than 8.0 volts, at any time other than the transition between states, an alarm message with Condition Status "B" shall be initiated.

4.2.12.3 Limitations on RF Test Signals - An RF test signal shall never be applied to an on-line receiver. Measurements shall not be initiated on any receiver where a squelch break is in effect. This will minimize interference from signals from other sources. In the event interference occurs after the test routine is started, the resulting parameter measurements may be outside an expected range and shall be disregarded. The measurement procedure shall not be initiated while any transmitter at the facility is being keyed or within 50 ms after any PTT status change from ON to OFF state. If PTT should occur on any frequency at the site during measurement, the results of that measurement shall be disregarded.

Adequate shielding and isolation of the RF test oscillator unit(s) shall be provided to prevent any measurable interference from occurring at any time in other on-line receivers operating on the same or different frequency. Over the range of service conditions the output frequency of the RF test signal shall be within 10 parts per million of the center frequency of the receiver under test. The frequency assignments are in the VHF (118 to 136 MHz) and UHF (225 to 440 MHz) ranges and are at 25 KHz increments. A program option shall permit adjusting the modulated and unmodulated test signal periods from 0.25 seconds to 2.0 seconds in 0.25 second increments. Equipment shall be delivered with an initial period set for 0.5 second for each increment.

4.2.13 Main/Standby Receiver Transfer - The Main/Standby Receiver Transfer signal (RCE Terminal Strip -Pins F20 and F21) indicates which receiver has been selected and is used primarily to control the antenna transfer relay. This signal shall also be used to identify the selected receiver. This information is needed to determine which receiver is on-line, making the AGC Voltage and VF Output Level measurements applicable, and which is off-line and should be subjected to the measurement of (S+N)/N. This signal is also needed to provide the availability status information in the channel data report.

4.2.13.1 Signal Characteristics - A voltage level of 2.0 volts or less on Pin 20, as referenced to Pin 21, shall be interpreted as an indication that the receiver normally used (number 1 or main receiver) has

been selected. A voltage level of 20.0 volts or more shall be interpreted as indicating that the other receiver (number 2 or standby receiver) has been selected as the active unit. A voltage level greater than 20.0 volts shall be interpreted as an alarm condition and shall cause the initiation of an alarm message with condition status code B, if the condition should persist over multiple alarm cycles (pre alarm filtering).

4.2.13.2 Interpretation - The Main/Standby Receiver Transfer signal shall be examined periodically and stored, replacing any previous information. Thus the information stored will represent the latest indication of which receiver is in use for each frequency. This information shall be used to determine which parameters should be examined on each assigned receiver. In addition, the information shall be used to establish availability status of each receiver for use in the channel data report.

4.3 Protocol - The radio site facility interfaces consist of interfaces with a number of equipment sensors. Each sensor may be monitored at any time, however, in some cases, certain operational conditions must exist for the sensors to provide meaningful information. These operational conditions are specified in Section 4.2 above for each sensor. No communication protocol is required for these interfaces.

4.4 Message Formats - The RCE/Radio Site Facility RMMS interface is actually an interface with a number of sensors that detect equipment status and operational characteristics. Some of these sensors provide analog information. Others provide simple on-off (binary) data. None involve formatted digital information. It is a function of the RCE to examine these sensors when operating conditions are appropriate, convert the measurements into digital form, recognize any operation which is outside an established normal range and generate alarm messages, and, in response to polling messages, organize the data into a preestablished message format for transmission to the MPS.

The formats of these messages shall be in accordance with NAS-MD-790. Messages applicable to the RCE are listed below together with format information and, where applicable, the action that must be taken by the RCE. No effort is made here to include characters (flags, link address, control field, and frame check sequence characters) that are a part of the message exchange protocol used between the Type II RCE concentrator and the MPS (or RMS concentrator).

4.4.1 Polling Messages - Polling messages are issued by the MPS to solicit responses from RMS elements in an organized manner. In response to any poll, the RCE

Concentrator will respond with any messages it has collected since the previous poll. It shall send these messages in priority sequence. The last frame of the last message shall have a special indicator (the "final" bit) to identify it as the final frame. On receipt of the final frame, the MPS may issue another poll. If there are no messages to return, a "Receiver Ready" frame shall be sent to the MPS. This frame has the "final" bit set to allow polling to resume.

Poll messages are of three kinds: Continuous, Scheduled and Specific. Scheduled and Specific Polls, in addition to a requirement to solicit messages at the immediate interface, contain information to be relayed to lower levels in the communications hierarchy to initiate the generation of site data reports.

4.4.1.1 Continuous Poll - The Continuous Poll solicits messages and requires no further action. The Continuous Poll message as it appears on the MPS/RCE interface is described in Section 2.4.1.1. This message, as such, will not reach the IG module which controls the RCE/Radio Site Facility interface. In accordance with procedures described in NAS-MD-790, each level in the communications hierarchy will independently collect messages from levels below so it will have them available to respond to polls from higher levels.

In the RCE, the technique for collecting these messages and the formats for any messages needed to control the collection process are left to the option of the contractor. Those techniques and the formats of any messages used to support them shall be completely specified in the Interface Control Document to be prepared by the contractor and shall be subject to approval by the FAA.

4.4.1.2 Scheduled Poll - The Scheduled Poll is the command by which the MPS requests site data reports from the RCE Concentrator. The format of the Scheduled Poll message at the MPS/RCE interface will be as described in Section 2.4.1.2. Polling information represented by this message shall be forwarded to the IIG Module specified by the RCE Channel Address, and through the RCE to the associated IG Module(s) at a remote radio site(s).

In response to this message the IG Module shall generate and return a Channel Data Report (CDR) consisting of a message, containing the latest stored sensor data, for each logical unit.

The format of the CDR message shall be as described in Section 4.4.3.

4.4.1.3 Specific Poll - The Specific Poll is a command to cause a new report to be generated for a specified logical unit. This action is generally initiated by a maintenance person who sends a message which is relayed to the RCE through the MPS.

The format of the specific poll message on the MPS/RCE interface is as specified in Section 2.4.1.3. This poll shall be forwarded to the IIG or IG Module identified by the RCE Channel Address and Logical Unit Address in the message. The identified module shall generate a CDR message following the format in Section 4.4.3.

4.4.2 Priority Messages - There are four types of priority RMMS messages to be supported by the RCE: alarm messages, return-to-normal messages, state change messages and terminal messages. These messages are generated within the RCE facilities and must be relayed to the MPS ahead of CDR messages. The formats for the priority messages are provided in the paragraphs that follow together with some information on their generation and processing.

4.4.2.1 Alarm Message - At a remote radio facility, various parameters relating to equipment performance and site status are monitored as operating conditions allow. The characteristics of these parameters are delineated in Section 4.2 above. As each parameter is monitored, it is compared with established threshold values. If any parameter should fall outside the range of values for that individual Equipment or if a binary condition should indicate an alarm condition, and if this condition should persist for a time period established by pre-alarm filtering, an Alarm Message shall be generated. The format to be used shall conform to NAS-MD-790, Paragraph 3.4.1. The information portion of this message is:

FUNCTION	NUMBER OF BITS	FORMAT
RMS Address	8	RCE Channel ID
Logical Unit Address	8	Transmitter ID
Delimiter	8	0000 0000
Message Function Code	8	Note 1
Data Point Address	8	Data Point ID
Condition Status	8	Note 2
Monitored Value	16	Note 3

Note 1: An alarm message is indicated by an upper case ASCII "A" for a hard alarm and lower case ASCII "a" for a soft alarm. A hard alarm indicates a failure that has caused the system to be inoperable. A soft alarm indicates continued operation outside the normal operating range.

Note 2: Condition status is an ASCII character as defined in NAS-MD-790, Paragraph 3.3.3.2.

Note 3: Monitored value is the value of the identified parameter in 15 bit binary code with sign. If the data point is a status indication rather than a parameter that can be measured, a value of zero is inserted. m Multiple alarms from a common logical unit may be reported in a single message by adding data point ID - condition status - monitored value sequences to the message.

Once an alarm message has been generated and sent, no further alarm messages for that parameter shall be sent. A change from a soft to a hard alarm state, however, shall cause a second alarm message.

4.4.2.2 Return-to-Normal (RTN) Message - The RTN Message is used to convey that a previously reported alarm condition is no longer in an alarm state as indicated by parameter measurements returning to the normal operating range for a time period established by pre-alarm filtering. The format for the RTN message and rules for its use are given in NAS-MD-790, Paragraph 3.4.2. The elements of this message are the same as for an alarm message except that the message function code is "B".

4.4.2.3 State Change Message - The State Change Message is used to report functions or parameters that are changed as a result of RMMS or on-site operator action. The format and rules for use of this message are specified in NAS-MD-790, Paragraph 3.4.3. The format is identical to that of the Alarm Message except that the message function code is an ASCII "C".

The Threshold Level Change Message is a special case of the State Change Message. It is identified with a lower case ASCII "c' as the message function code, and has two additional 16 bit fields to report the new high and low limit parameters.

State change messages shall be transmitted to the Type II facility in the same manner as Alarm Messages. In precedence, State Change Messages shall follow any Alarm or RTN messages.

4.4.2.4 Terminal Message - The RCE shall support a portable terminal at Type I and Type II facilities. The characteristics for the portable terminal interface are given in Section 7 of this working paper. Terminal messages shall be transmitted to the Type II RCE facility in the same manner as Alarm Messages. Terminal Messages shall be transmitted after all pending alarm messages, RTN messages and State Change Messages have been transmitted.

4.4.3 Channel Data Report (CDR) - The Channel Data Report is the format for reporting performance parameter measurements to the MPS. Actually the CDR consists of a series of messages, one for each logical unit. Logical

units for a typical RCE channel at the remote (Type I) site are:

Transmitter 1	Receiver 1	Type I RCE Modules
Transmitter 2	Receiver 2	Common Modules *
Transmitter 3	Receiver 3	Trunk*
Transmitter 4	Receiver 4	Site Parameters or ERMS*

* Logical units that may be shared by multiple channels. Measurements for these shared units shall be reported either as logical units within one of the channels that share them or as logical units of a special RMS address dedicated to the common units.

In response to a Scheduled Poll, a channel shall generate a CDR message for each assigned logical unit. A Specific Poll will address only one logical unit and thus will cause the generation of a single CDR message reporting the parameters for the logical unit identified in the Specific Poll message. Radio equipment parameters will be reported as transmitter logical units or receiver logical units. Formats to be used for reporting transmitter parameters and receiver parameters are listed here. Parameters for RCE Modules are subject to the contractor's design; message formats for reporting these parameters shall be developed by the contractor and shall be subject to approval by the FAA. Environmental and site security parameters and message formats are discussed in Sections 5 and 6.

Some channel installations will be equipped with tunable transceivers instead of the solid state transmitters and receivers discussed in this section. Parameter data and message formats for this equipment will be provided after specific equipment is selected. Report messages will be generally similar to those for the transmitters and receivers.

4.4.3.1 Transmitter CDR Message - Up to four transmitters may be assigned to an RCE channel. The CDR shall include one message for each transmitter. Channels that are not fully equipped shall generate messages only for the equipment assigned. The MPS data base is to contain information as to the equipment complement on each channel and will thus have a list of report messages to be expected. The message format shall be in accordance with NAS-MD-790, Paragraph 3.6. For each transmitter the CDR message will have the following format:

FUNCTION	NUMBER OF BITS	FORMAT	REFERENCES
RMS Address	8	RCE Channel ID	
Logical Unit Address	8	Transmitter ID	Note 1
Delimiter	8	0000 0000	
Message Function Code	8	ASCII "G"	Note 2

FUNCTION	NUMBER OF BITS	FORMAT	REFERENCES
Exciter Status	8	Note 3	4.2.9
LPA Status	8	Note 3	4.2.2.2
Fwd Power Status	8	Note 4	
Fwd Power Value	16	Note 5	4.2.3.2
VSWR Status	8	Note 4	
VSWR Value	16	Note 5	4.2.4.2
PTT Occurrences Status	8	Note 4	
PTT Occurrences Value	16	Note 5	4.2.1.2
VF Input Level Status	8	Note 4	
VF Input Level Value	16	Note 5	4.2.7.2
Modulation Status	8	Note 4	
Modulation Value	16	Note 5	4.2.8.2
LPA Forward Power Status	8	Note 4, Note 6	
LPA Forward Power Value	16	Note 5, Note 6	4.2.5.2
LPA VSWR Status	8	Note 4, Note 6	
LPA VSWR Value	16	Note 5, Note 6	4.2.6.2

Note 1: Transmitters located at a common remote radio site shall be assigned logical unit addresses hex 24, 25, 26, and 27.

Note 2: If the equipment defined by the logical unit address is not operating, the Message Function Code shall be a lower case ASCII "g". For such messages, data point status and values for the logical unit shall be omitted.

Note 3: Equipment availability status shall be as defined in NAS-MD-790 Paragraph 3.3.3.1. If an LPA is not used, the LPA status shall be hex 26.

Note 4: Data point status shall be an ASCII character assigned in accordance with NAS-MD-790 Paragraph 3.3.3.2. If no new readings of the data point have been taken since the previous CDR, as in the case of a transmitter that has been in the off-line state since the previous CDR, the data point status shall be ASCII "H" if the previous reading indicated normal operation, "I" if a hard alarm state was indicated, or "J" if the data point was in a soft alarm state. The value used shall be the same as the value previously reported.

Note 5: All values identified herein shall be reported in the 16 bit format described in NAS-MD-790 Paragraph 3.3.4.

Note 6: Omitted if the logical unit is not equipped with an LPA.

4.4.3.2 Receiver CDR Message - Up to four receivers may be assigned to a RCE channel. The CDR shall include one message for each receiver. Channels that are not fully equipped shall generate messages only for the receivers that are installed. The CDR messages shall be in the format specified in NAS-MD-790 Paragraph 3.6. For each receiver the format shall be:

FUNCTION	NUMBER OF BITS	FORMAT
RMS Address	8	RCE Channel ID
Logical Unit Address	8	Receiver ID Note 1
Delimiter	8	0000 0000
Message Function Code	8	ASCII "G" Note 2
Receiver Status	8	Note 3
AGC Level Status	8	Note 4
AGC Voltage	16	Note 5
VF output Status	8	Note 4
VF Output Level	16	Note 5
(S+N)/N Status	8	Note 4
(S+N)/N	16	Note 5
Squelch Break Status (6 uv Modulated)	8	Note 3
Signal Generator Output Status (6 uv Modulated)	8	Note 4
Signal Generator Output Level (6 uv Modulated)	16	Note 5
AGC Voltage Status (6 uv Modulated)	8	Note 4
AGC Voltage Level (6 uv Modulated)	16	Note 5
VF Output Status (6 uv Modulated)	8	Note 4
VF Output Level (6 uv Modulated)	16	Note 5
Signal Generator Output Status (6 uv Unmodulated)	8	Note 4
Signal Generator Output Level (6 uv Unmodulated)	16	Note 5

FUNCTION	NUMBER OF BITS	FORMAT
Signal Generator Output Status (50 uv Modulated)	8	Note 4
Signal Generator Output Level (50 uv Modulated)	16	Note 5
AGC Voltage Status (50 uv Modulated)	8	Note 4
AGC Voltage Level (50 uv Modulated)	16	Note 5
VF Output Status (50 uv Modulated)	8	Note 4
VF Output Level (50 uv Modulated)	16	Note 5

Note 1: Receivers located at a common site shall be assigned logical unit addresses hex 28, 29, 2A and 2B.

Note 2: If the equipment defined by the logical unit address is not operating, the message function code shall be a lower case ASCII "g". For such messages, data point status and values for the logical unit shall be omitted.

Note 3: Equipment availability status shall be as defined in NAS-MD-790 paragraph 3.3.3.1.

Note 4: Data point status shall be an ASCII character assigned in accordance with NAS-MD-790 Paragraph 3.3.3.2. If no new readings of the data point have been taken since the previous CDR, as in the case of (S+N)/N value for a receiver that has been on-line since the previous CDR, the data point status shall be ASCII "H", if the readings showed normal operation, "I" if a hard alarm state was indicated, or "J" if the data point was in a soft alarm state. The values used shall be the same values that were previously reported.

Note 5: All values identified herein shall be reported in the 16 bit format described in NAS-MD-790 Paragraph 3.3.4.

5.0 ENVIRONMENTAL AND SITE SECURITY INTERFACES - In addition to monitoring performance parameters for its four transmitters and receivers, one RCE channel at each remote radio site shall also monitor a number of station sensors that indicate the status of the facility, and provide certain control functions necessary for the operation of the site. The functional location of these sensors and controls is illustrated in Figure 5-1.

Status indications and parameters to be monitored are AC voltage, DC voltage, E/G master safety switch status, E/G OFF/RUN status, room temperature, smoke detector status, and building entrance door status. Design of the IG module shall provide sensor ports to monitor each of these parameters. Spare ports shall be included to monitor at least three additional parameters to be identified at a future time.

Controls are required to perform maintenance actions initiated by message from another facility. Commands such as master reset, startup/recovery, on-line/off-line select, change alarm threshold, change password, and data base download do not involve an external interface at the remote site and, therefore, are not described in this section. Commands that do involve an external interface are start/stop engine generator, and HVAC lockout. In addition to these controls, spare capacity shall be provided for at least three additional external controls.

As in the case of radio equipment parameters, the IG module shall periodically scan the parameters at least once each 5 seconds, digitize and store the measurements and compare them with threshold values. If any fall outside the acceptable range or if a state change should be detected, an appropriate message shall be generated to be sent to the MPS. Pre alarm filtering, the number of consecutive detections required before reporting an event (alarm condition or state change), shall be initially set by site adaptation to require two (2) such detections. The quantity shall be adjustable for each parameter, to require as few as one (1) or as many as four (4) detections. The appropriate report message shall be generated and available for transmission from the IG module within two (2) seconds after the final detection. The time between initial occurrence of an event and detection shall not exceed (5) seconds. The sensor readings shall be stored for use in the next Channel Data Report (CDR) to be generated in response to a scheduled poll or specific poll. The group of site sensors/parameters is considered to be a single logical unit and shall be reported as data points in a single message.

The following paragraphs define the physical and electrical characteristics of the interfaces. This information is followed with specification of the message formats required.

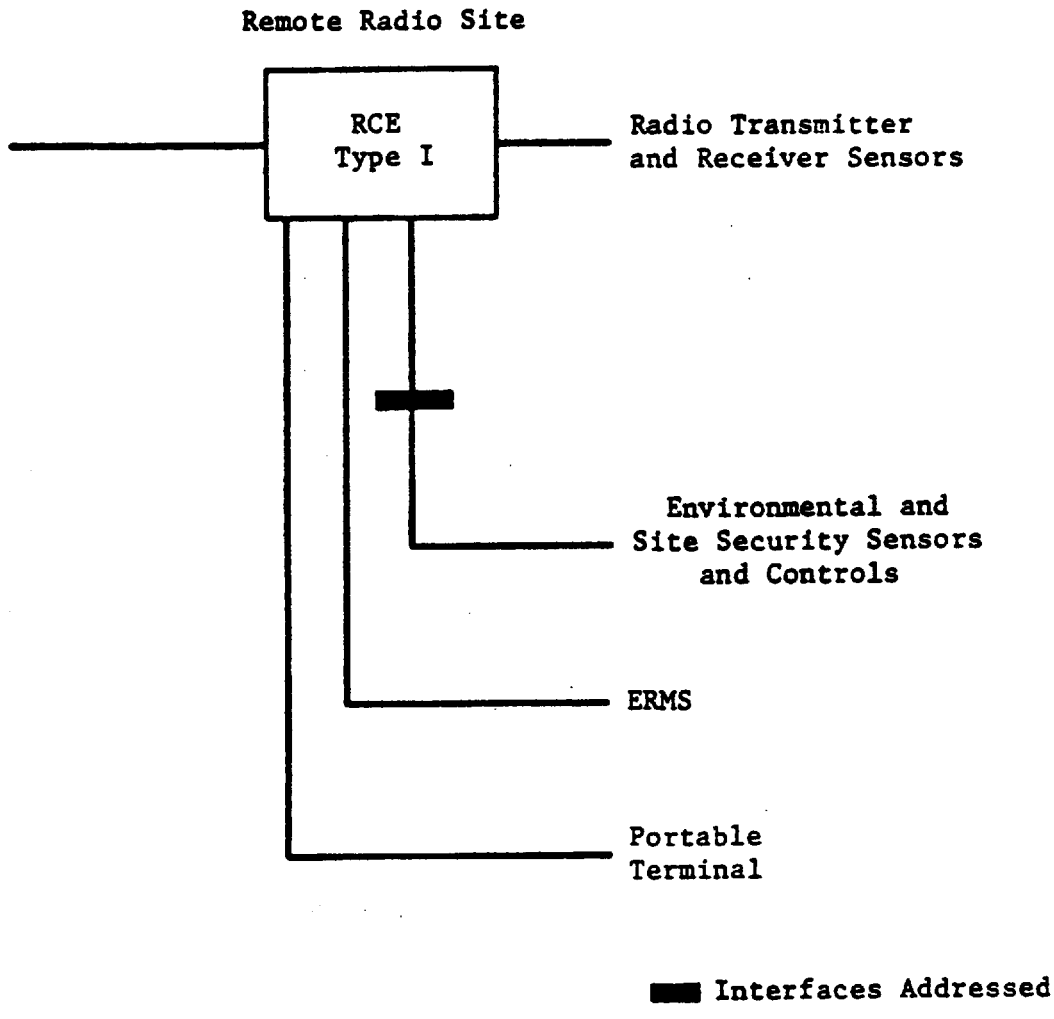

FIGURE 5-1
RCE/RMS INTERFACE WITH ENVIRONMENTAL AND SITE SECURITY SENSORS

5.1 Mechanical Characteristics - The sensors and controls defined in this section are located at various points throughout the facility. The demarcation point shall be at a connection block to be provided by the contractor and local external to the RCE racks. Suitable isolation circuits to protect the RCE and personnel from hazardous voltages or power sources shall be provided with the connection block. The sensors and control interfaces to equipment at the site and the cabling between them and the connection block and the RCE modules shall be provided by the contractor.

5.2 Electrical characteristics - The following paragraph list the various site parameters to be monitored and the external controls to be provided. Electrical characteristics of each are given.

As in the case of the radio equipment parameters, the site parameters shall be measured using an analog to digital conversion capability providing resolution of at least 1000 steps in its range of operation. For data points with 0 to 10 volt DC inputs, the measurement error shall not exceed 20 millivolts; for 0 to 20 volt DC inputs, the measurement error shall not exceed 128 millivolts9 for 0 to 32 volt DC inputs, the measurement error shall not exceed 240 millivolts for resistive sensors, the measurement error shall not exceed 10 ohms, and for 90 to 150 volt 60 hz AC inputs , the measurement error shall not exceed 500 millivolts. The values reported in CDR messages shall be to the full accuracy and resolution indicated above for each type of input and shall be converted to the units of the parameter being measured. Conditioning circuits for the sensors shall be designed so that, by changing the components that comprise the conditioning circuits, future sensors with different voltage ranges may be accommodated.

5.2.1 Site Parameters - The following site parameters are to be monitored for inclusion in the SDR.

5.2.1.1 AC Voltage - An interface point will be provided on the load side of the engine/generator transfer switch. Normally this interface point will provide a means to measure the voltage of the commercial power source. If the emergency generator is operating, the voltage at this point will be that from the engine/generator.

5.2.1.1.1 Signal Characteristics - This interface will consist of the actual AC voltage appearing from phase to neutral (120 V AC) for two phases of the power source. Connection points shall be provided in the terminal block to sample two (2) voltages. If the power source is a

single-phase 3-wire circuit, the voltage between each line and neutral will be provided. If the source is a 3-phase, 4-wire circuit, the phase to neutral voltage for two (2) of the phases will be provided. If the source is a single-phase 2-wire circuit, only the line to neutral voltage will be provided. In the latter case, adaptation data will indicate that only one voltage is to be expected and will inhibit any attempt to report the other.

Suitable isolation circuits or devices shall be provided with the connection block to assure that hazardous voltages are isolated from the RCE modules and racks. Provision shall be made to measure the RMS value of these voltages over the range from 90 to 150 volts.

5.2.1.1.2 Interpretation - These data points shall periodically (at least once each 5 seconds) be sampled and the RMS value of each AC voltage shall be converted to digital form and stored for later use in the CDR as defined in Section 5.4.3. Only the latest measurements need be maintained in storage. The measurements shall be to the full accuracy and resolution for 90 to 150 volt AC inputs and converted to volts as specified in Section 5.2.

Each time a voltage level is measured, it shall be compared with upper and lower threshold limits. Normally the lower limit will be between 90 and 120 volts and the upper limit will be between 120 and 150 volts. The threshold limits will be initially established as adaptation data, however, provision shall be made to allow maintenance personnel to change them using a portable MDT, either locally or from a remote facility. If the measurement should fall outside the acceptable range, as defined by the threshold limits, for a time period established by prealarm filtering, the RCE shall initiate an alarm message following the format in Section 5.4.2.1 and transmit it to the MPS in response to the polling procedures described in Section 2. On return to the normal range, for a time established by prealarm filtering, the RCE shall initiate a RTN message.

5.2.1.2 DC Voltage - This data point will provide for monitoring the DC voltage level on the load side of the RCE power supply.

5.2.1.2.1 Signal Characteristics - The signal will be the actual DC voltage used to power the RCE and may have values extending over a range from 18 to 30 volts. Provision shall be made to measure the DC voltage over a range from 17 to 31 volts. Suitable isolation circuits or devices shall be provided at the terminal block to protect the RCE from any hazard resulting from the characteristics of the source.

5.2.1.2.2 Interpretation - The RCE shall periodically monitor the voltage level (at least once each 5 seconds), convert it to digital form and store it, for later inclusion in the CDR.

Only the latest measurement need be maintained in storage. The measurement shall be to the full accuracy and resolution for 0 to 32 volt DC inputs and converted to DC volts as specified in Section 5.2.

Each time the measurement is made it shall be compared with upper and lower threshold limits. Normally the lower limit will be between 18 and 24 volts and the upper limit, between 24 and 30 volts. These threshold limits will be initially established as adaptation data, however, provision shall be made to allow maintenance personnel to change them using a portable MDT either locally or at a remote facility. If the measurement should fall outside the acceptable range, as defined by the threshold limits, for a time period established by prealarm filtering, the RCE shall initiate an alarm message following the format defined in Section 5.4.2.1 and transmit it to the MPS in response to the polling procedures defined in Section 2. A return to the normal range shall cause a RTN message to be generated in accordance with Section 5.4.2.2.

5.2.1.3 E/G Master Safety Switch Status - This sensor indicates the setting of the engine generator master safety switch, which disables the automatic start and remote start capabilities so that the equipment may be safely serviced.

5.2.1.3.1 Signal Characteristics - A voltage 0.5 or less volts DC at this sensor point shall be interpreted as an indication the E/G Master Safety Switch is in the normal state. A voltage of +17 VDC or more shall be interpreted as an indication that the switch is in the "safe" state. A voltage greater than 0.5 and less than 17 VDC shall be interpreted as an alarm condition and shall cause an alarm message with condition status code B to be generated if the condition should persist over multiple monitoring cycles (pre alarm filtering).

5.2.1.3.2 Interpretation - The RCE shall periodically monitor the E/G Master Safety Switch status (at least once each 5 seconds), and store the binary status for later inclusion in the CDR (Section 5.4.3). Only the latest status need be maintained in storage.

When a change to the "safe" condition is recognized, the RCE shall generate a state change message (Section 5.4.2.3) with ASCII "C" as the condition status and transmit it to the MPS in response to the polling procedures defined in Section 2. Upon recognition of the return to the normal state, the RCE shall initiate another state change message with an ASCII "A" as the condition status.

5.2.1.4 E/G OFF/RUN Status - This sensor point provides an indication of whether the engine/generator (E/G) is running or not.

5.2.1.4.1 Signal Characteristics - The monitor point will consist of a normal open Form A contact. A loop resistance of 1,000 ohms or more shall be interpreted as indicating that the E/G in the "OFF" status.

Loop resistance of 10 ohms or less shall be interpreted as indicating that the E/G is operating. Loop resistance greater than 10 ohms and less than 1,000 ohms shall be interpreted as an alarm condition and shall cause an alarm message with condition status code B, to be generated if the condition should persist over multiple monitoring cycles (prealarm filtering).

5.2.1.4.2 Interpretation - The RCE shall periodically monitor the engine/generator OFF/RUN status (at least once each 5 seconds) and store the binary status for inclusion in the CDR. Only the latest status indication need be maintained in storage.

A state change message as defined in Section 5.4.2.3 shall be initiated on a change from off to run or run to off. Condition status shall be an ASCII "C" to indicate that the engine generator is running. ASCII "A" shall indicate that it is idle.

5.2.1.5 Ambient Room Temperature - Two (2) temperature sensors are provided at each remote radio site. One sensor measures temperature in the electronics equipment room, the other, in the engine/generator room.

5.2.1.5.1 Sensor Characteristics - The temperature sensors display a resistance ranging from 4000 ohms to 6000 ohms depending on temperature.

5.2.1.5.2 Interpretation - The RCE shall periodically monitor the temperature sensors (at least once each 5 seconds). Current use for this measurement shall not exceed 0.001 ampere. Each time the measurement is taken it shall be converted to digital form and stored for later use in the CDR. Only the latest measurement need be maintained in storage. The measurement shall be to the full accuracy and resolution for resistive measurements and converted to degrees Celsius as specified in Section 5.2.

If the temperature of either sensor should exceed 66 oC for more than one minute, a "fire" alarm message shall be generated, following the format in Section 5.4.2.1, with a data point indicator of hex 20, for transmission to the MPS in response to the polling procedures described in Section 2.

5.2.1.6 Smoke Detector - A smoke detector is provided in the electronic equipment room at each radio site.

5.2.1.6.1 Sensor Characteristics - The smoke detector output is a normally closed (Form B) contact. A loop resistance of 10 ohms or less shall indicate the normal state. A loop resistance of 1,000 ohms or more shall be interpreted as the alarm state. Loop resistance greater than 10 ohms and less than 1,000 ohms shall be interpreted as an alarm condition and shall cause an alarm message, with condition status code B, to be

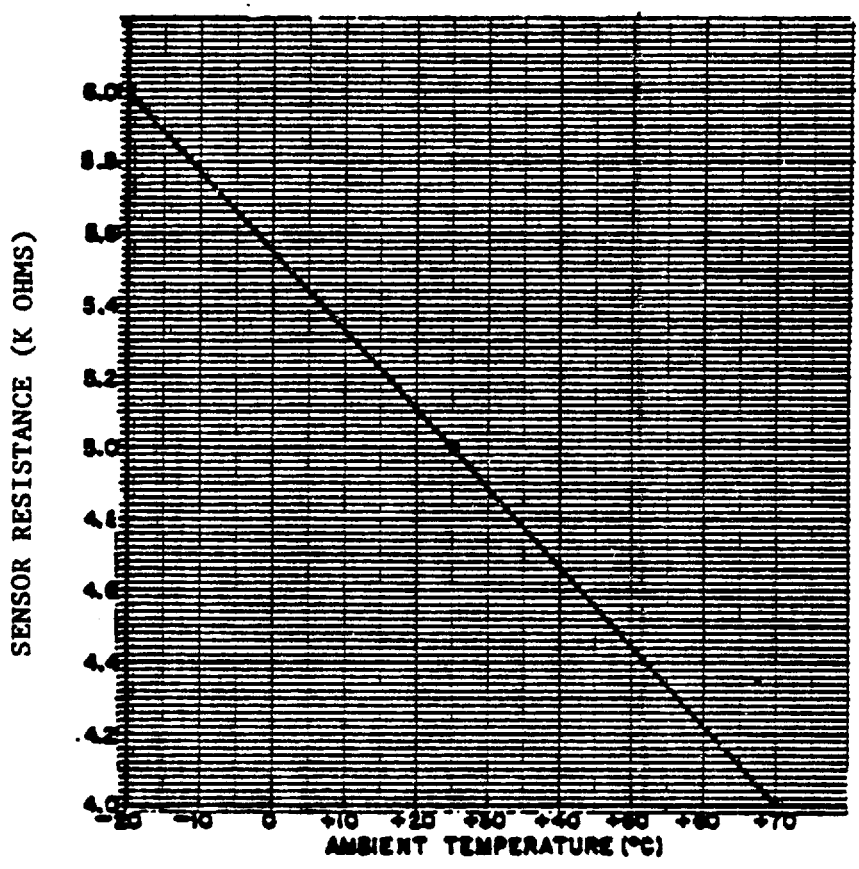

AMBIENT TEMPERATURE ($^{\circ}$C)

1. Sensor resistance changes at rate of 22.222 ohms/degree Celsius.

2. Sensor resistance is 5K ohms at 25°C.

3. Tolerance on resistance = $\pm$ 1% from -20°C to +70°C.

FIGURE 5-2
ROOM TEMPERATURE SENSOR CHARACTERISTICS

generated if the condition should persist for multiple monitoring cycles as established by the prealarm filtering criterion.

5.2.1.6.2 Interpretation - The RCE shall periodically monitor the smoke detector (at least once each 5 seconds), determine the binary status and store it for later inclusion in the CDR. Only the latest status need be maintained in storage.

On detection of changes to and from the alarm state, the RCE shall initiate alarm messages and RTN messages (Sections 5.4.2.1 and 5.5.2.2) and transmit them to the MPS in response to the polling procedures (Section 2).

5.2.1.7 Building Entrance Doors - Each building entrance door at a remote radio site is equipped with an intrusion sensor. A site normally has two (2) doors and therefore has two (2) sensors.

5.2.1.7.1 Sensor Characteristics - Loop resistance of 10 ohms or less shall be interpreted as the normal "closed" state. A loop resistance of 1,000 ohms or more shall be interpreted as indicating an open or alarm condition. Loop resistance greater than 10 ohms and less than 1,000 ohms shall be interpreted as an alarm condition and shall cause an alarm message with condition status code B, to be generated if the condition should persist for multiple monitoring cycles established by the prealarm filtering criterion.

5.2.1.7.2 Interpretation - The RCE shall periodically monitor each building entrance door sensor (at least once each 5 seconds). Whenever either sensor goes to the "open" state an alarm message shall be generated and sent to the MPS. This message will activate a timer in the MPS. If a logon message is received from the site within two (2) minutes, the MPS will take no further action. If the two (2) minute timer should expire, the MPS will indicate an intrusion at the site. The format of the door alarm message shall be as indicated in Section 5.4.2.1. Return to the "closed" state shall cause a RTN message (Section 5.4.2.2) to be generated.

The state of these sensors shall be stored, replacing any previously stored state information, for inclusion in the CDR message.

5.2.2 Site Controls - The following control functions are to be provided at each site. These controls may not be applicable at all sites.

5.2.2.1 Engine Generator Start/Stop - The ability to start and stop an engine generator by message from a remote location shall be provided to control such equipment at sites so equipped.

5.2.2.1.1 Electrical Characteristics - A Form A contact pair shall be provided to control the engine generator. Closure of the contacts will cause the engine generator to start and to assume the electrical load at the site. Opening of the contacts will initiate a normal shutdown routine and cause the electrical load at the site to be shifted back to commercial power. The contacts shall be rated for at least 2 amperes with a resistive load, 130 volts AC. Contact voltage drop in the start mode at rated current shall not exceed 1.5 volts. In the stop mode, leakage current at rated voltage shall not exceed 6 ma.

Suitable circuitry and/or devices shall be provided at the connection block to isolate the RCE from the voltages and currents involved.

5.2.2.1.2 Initiation - The engine generator start function shall be initiated on receipt of a command message from a local terminal or from a remotely located terminal via the MPS. The message to cause the engine generator to start shall be a command message (message function code "H") containing a command code of hex 22. The stop command message shall have the same format and a command code of hex 23. The format of the command messages is described in Section 5.4.4.

5.2.2.2 HVAC Lockout - A control capability shall be provided to disable the heating, ventilating or air conditioning equipment for use at sites where such equipment is used.

5.2.2.2.1 Electrical Characteristics - A Form A contact pair shall be provided. Contact closure will disable the HVAC thermostat circuits thereby causing such equipment to be disabled. Open circuit will cause the thermostat circuits to be enabled. Contacts shall be rated for at least 2 amperes at 130 volts. Contact voltage drop shall not exceed 1.5 volts when closed. Leakage current shall not exceed 6 ma when contacts are in the open state.

Suitable circuitry and/or devices shall be provided at the connection block to isolate the RCE from the voltages and currents involved.

5.2.2.2.2 Initiation - The HVAC lockout function shall be initiated on receipt of a command message from a local MDT or from a remote MDT via the MPS. The lockout message shall be a command message (message function code H) containing a command code of hex 30. A similar message with command code hex 31 shall cause resumption of normal HVAC operation. Status of the HVAC function shall be maintained in memory for use in the CDR message. See Section 5.4.4 for command message formats.

5.3 Protocol - The external interfaces for parameters and controls require no protocol. Protocol for control of the transfer of data messages within

the RCE is left to the option of the contractors. Protocol for control of message flow between the RCE and the MPS or RMS Concentrator shall be in accordance with Section 2 or 3 of this document.

5.4 Message Formats - The environmental and site security interfaces consist of sensors that detect facility status, sensors that detect some analog function and controls. None of these involve formatted digital information. However, the function of the RCE is to monitor the sensors, digitize and store readings, detect abnormal characteristics, initiate alarm messages, compose data report messages an response to polling messages, and execute certain controls at the remote site an response to command messages. This section will describe the message formats required, specifically as they relate to the environmental and site security interfaces. Polling messages, priority messages, channel data report messages and command messages are of significance and will be discussed here.

5.4.1 Polling Messages - Polling is the mechanism by which the MPS controls the inflow of report messages. Polling messages are of three kinds: Continuous, Scheduled and Specific. In response to any polling message, the facility receiving the poll responds by sending any message it has awaiting transmission, in priority sequence.

The use of polling messages as they apply to RMMS functions at remote RCE facilities is as described in Section 4.4.2 and subsections. Formats for these messages are as described in Section 2.4.1 and subsections. In all cases the RCE channel address used for Scheduled and Specific Poll messages to solicit environmental and site security data shall be that of the RCE channel assigned by site adaptation to carry the site data. The logical unit address in the Specific Poll message shall be that of the RCE channel assigned by site adaptation to carry the site data. The logical unit address in the Specific Poll message shall be hex 22 as specified in NAS-MD-790, paragraph 3.2.2.

5.4.2 Priority Messages - Alarm, Return-to-Normal (RTN), State Change and Terminal messages are referred to as priority messages because they are processed ahead of data messages. Alarm, RTN and State Change messages are significant to the environmental and site security interfaces and are described here. Other priority messages may be found to be needed as the design progresses.

5.4.2.1 Alarm Messages - An alarm is indicated by a parameter reading outside the normal operating range for a time period established by prealarm filtering. The format for an Alarm message is as specified in

NAS-MD-790, Paragraph 3.4.1. For the environmental and site security interfaces, the message format is:

FUNCTION	NUMBER OF BITS	FORMAT
RMS Address	8	Note 1
Logical Unit Address	8	hex 22
Delimiter	8	0000 0000
Message Function Code	8	Note 2
Data Point ID	8	Note 3
Condition Status	8	Note 4
Monitored Value	16	Note 5

Note 1: The RMS address shall be the ID of the RCE channel selected by adaptation to transmit the site data to the MPS.

Note 2: The message function code shall be ASCII "A" for a hard alarm (which causes the system to be inoperable) or ASCII "a" for a soft alarm (operable but outside the normal operating range).

Note 3: Data Point ID shall be in accordance with NAS-MD-790, Table 3-3.

Note 4: Condition Status is an ASCII character as defined in NAS-MD-790, Paragraph 3.3.3.2.

Note 5: Monitored value if applicable, is the value of the identified parameter in 15 bit binary code with sign. If the data point is a status indication only and not a parameter that can be measured, a value of zero is inserted. Multiple alarms for the same logical units may be reported in a single message by adding Data Point ID - Condition Status - monitored value sequence to the message.

Once an alarm message has been generated and sent, no further alarm messages for the parameter shall be sent unless it is a soft alarm which degenerates to a hard alarm state.

5.4.2.2 RTN Messages - The RTN message is used to report that a previously reported alarm condition is no longer in an alarm state as indicated by parameter measurements in the normal range for a time period established by prealarm filtering. The format for this message is in accordance with NAS-MD-790, Paragraph 3.4.2. The elements of the message are the same as for an Alarm message except that the message function code is ASCII "B".

5.4.2.3 State Change Message - The state change message is used to report functions or parameters that are changed at a site. The format and rules for use of the state change message are specified in NAS-MD-790, Paragraph 3.4.3. The format is identical to that of the Alarm message except that the message function code is an ASCII "C".

The threshold level change message (message function code lower case ASCII "c") has two additional 16 bit fields to report the new high and low limit parameters.

5.4.3 Channel Data Report (CDR) - The CDR message shall be generated in response to a scheduled poll or a specific poll requesting the Environmental and Site security report. The message format shall be in accordance with NAS-MD-790, Paragraph 3.6. The CDR format for the RCE Environmental and Site Security report shall be:

FUNCTION	NUMBER OF BITS	FORMAT	REFERENCE
RMS Address	8	Note 1	
Logical Unit Address	8	hex 22	
Delimiter	8	hex 00	
Message Function Code	8	ASCII "G"	
Availability Status	8	hex 21	
Fire	8	Note 2	5.2.1.5.2
Smoke	8	Note 2	5.2.1.6.2
Security 1	8	Note 2	5.2.1.7.2
Security 2	8	Note 2	5.2.1.7.2
E/G Off/Run Status	8	Note 2	5.2.1.4.2
E/G Safety Sw	8	Note 2	5.2.1.3.2
HVAC Status	8	Note 2	5.2.2.2.2
DC Voltage Status	8	Note 3	5.2.1.2.2
DC Voltage Value	16	Note 4	5.2.1.2.2
AC Voltage 1 Status	8	Note 3	5.2.1.1.2
AC Voltage 1 Value	16	Note 4	5.2.1.1.2
AC Voltage 2 Status	8	Note 3	5.2.1.1.2
AC Voltage 2 Value	16	Note 4	5.2.1.1.2
Elec Rm Temp Status	8	Note 3	5.2.1.5.2
Elec Rm Temp Value	16	Note 4	5.2.1.5.2
E/G Rm Temp Status	8	Note 3	5.2.1.5.2
E/G Rm Temp Value	16	Note 4	5.2.1.5.2
Additional Parameters	Variable	Note 5	

Note 1: The RMS address is the ID of the RCE channel selected by adaptation to transmit the site data to the MPS.

Note 2: ASCII "A", "B", "C" or "E" as defined in NAS-MD-790, Paragraph 3.3.3.2.

Note 3: ASCII "A", "B", "C", "D", "E" or "F" as defined in NAS-MD-790. If no new readings of the data point have been taken since the previous CDR the data point status shall be ASCII "H" if the data point was in normal operation, "I" if it was in a hard alarm state or "J" if it was in a soft alarm state.

Note 4: All values reported in 16 bit format described in NAS-MD-790, Paragraph 3.3.4.

Note 5: Up to three additional parameters, to date undefined, may be added.

5.4.4 Command Messages - Command messages are used to initiate control functions at the remote site. Control functions include master reset, startup/recovery, E/G start, E/G stop, equipment control threshold change, password change, and data base download as defined in NAS-MD-790, Paragraph 3.7 and subparagraphs. These and other controls may be used in the RCE as required by the system design.

The format for a command message is:

FUNCTION	NUMBER OF BITS	FORMAT
RMS Address	8	Note 1
Logical Unit Address	8	Note 2
Delimiter	8	hex 00
Message Function Code	8	ASCII "H"
Command Code	8	Note 3
Values	Variable	Note 3

Note 1: RCE Channel ID to which the command is related. If the command relates to the environmental and site security parameters, the Channel ID for the RCE channel used for reporting such parameters shall be used.

Note 2: ID of the logical unit to which the command applies.

Note 3: As defined in NAS-MD-790 Paragraph 3.7 and subparagraphs.

6.0 ENVIRONMENTAL RMS INTERFACE - Some remote radio sites will be equipped with an Environmental RMS (ERMS). At such sites, the RCE shall support the ERMS by conveying messages in both directions between it and the MPS. If a site is equipped with an ERMS, the RCE will not be required to monitor or provide control over environmental and site security functions identified in Section 5. The interface for ERMS is illustrated in Figure 6-1.

The IG module shall include a suitable interface capable of exchanging data with the ERMS and it shall include any software required to relay messages to and from this equipment.

Messages to be relayed to the ERMS will include scheduled poll, specific poll and command messages. In addition to the relayed messages, the IG module shall generate continuous poll messages to collect alarm and other messages so they will be available when polling is received from higher levels in the RMMS communications hierarchy. The ERMS will generate suitable alarm and site data report messages following the specification of NAS-MD-790. The RCE shall relay these messages to the MPS or RMS concentrator interface along with any RMMS messages it generates.

The protocol to be used for exchange between RCE and ERMS shall be the same as that used throughout the RMMS. However, since both the RCE channel and the ERMS are considered to be RMSs in the address hierarchy, yet they are at different levels in the communications hierarchy, the message exchange procedure must deviate from the standard technique described in NAS-MD-790. Both the RCE channel and the ERMS it supports will share the same RMS address. A block of logical unit addresses will be reserved for the RCE and a different block of addresses will be reserved for ERMS. If a message from the MPS contains one of the logical unit addresses assigned to the ERMS, or a global indicator, the IG shall relay it to the ERMS. The detailed differences from the standard NAS-MD-790 procedures are described in Section 6.3.

The following sections specify the physical and electrical characteristics of the interface with the ERMS. In addition, information is provided on the formats of the messages involved.

6.1 Mechanical Characteristics - The interface between ERMS and RCE shall be in accordance with EIA Standard RS-232-C with specific characteristics enumerated below. Circuitry capable of implementing this interface shall be provided in the IG module. When the equipment is installed, the ERMS will be associated with a particular RCE Channel by site adaptation. The IG involved will be the specific one that is associated with the channel assigned to support the ERMS.

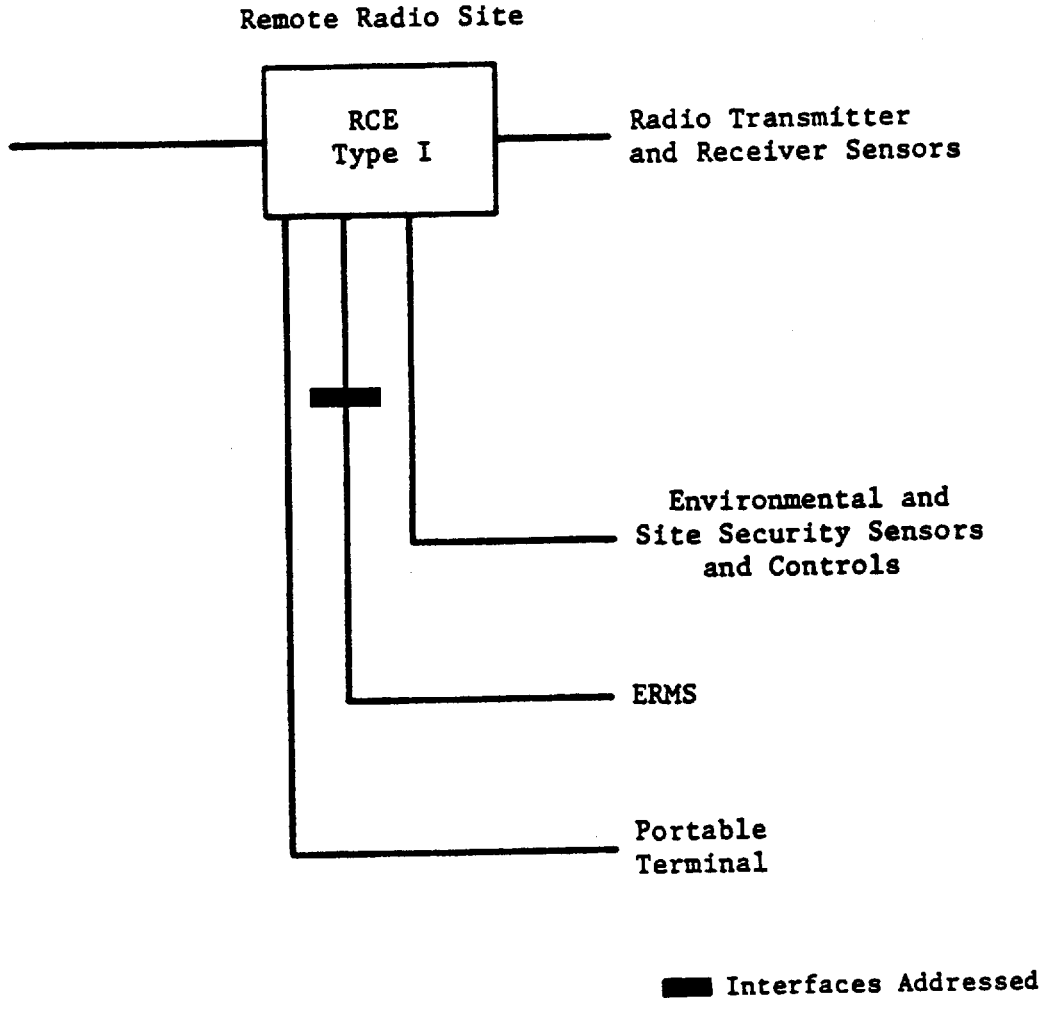

Figure 6-1

RCE/RMMS Interfaces with Environmental RMS

6.1.1 Physical Location - The demarcation point will be at a connection panel to be furnished by the contractor and located in the RCE racks. Cabling between the panel and ERMS will be provided by the government. Connections between the panel and the RCE modules are considered to be part of the RCE and shall be provided by the contractor.

6.2 Electrical Characteristics - The interface between the RCE and ERMS shall be in accordance with EIA Standard RS-232-C, Interface D as described herein. Both the RCE and ERMS are considered to be Data Terminal Equipment (DTE) as defined in RS-232-C. Modems, if required, will be provided by the government. Generally the distances involved will not require the use of modems, in which case the government will provide a "Null Modem" capability, including the required circuit interchange and clock source. Specific circuits to be provided in the interface are as defined below:

6.2.1 Data Circuits - Data transfer from the RCE to the ERMS shall take place over the BA (pin 2) circuit in the RS-232-C connector. Data bits shall be clocked out in response to timing pulses on the DB circuit (pin 15). Data transfer from the ERMS to the RCE shall use the BB (pin 3) circuit. Clock pulses will be provided on circuit DD (pin 17). Each of these circuits use circuit AB (pin 7) as a common return. All data transfers shall take place at 2400 bits per second in synchronous mode. The physical interface shall support the simultaneous exchange of data in both directions.

6.2.2 Control Circuits - The following circuits shall be implemented to control the flow of data across the interface:

CIRCUIT	PIN	DIRECTION	MEANING
CA	4	from RCE	Request to Send - to indicate that the RCE has data to be transferred to ERMS.
CB	5	to RCE	Clear to Send - to indicate that data transfer may proceed.

CIRCUIT	PIN	DIRECTION		MEANING
CC	6	to	RCE	Data Set Ready - to indicate that power is on and the interface is ready to accept data.
CF	8	to	RCE	Received Line Signal Detector - normally provided by a modem to indicate that a signal is present on the line.

Other control circuits in the RS-232-C interface may be utilized if required by the contractor's design, however, it shall be the responsibility of the contractor to obtain government approval for the use of such circuits to assure proper operation of the interface.

All the above data and control circuits shall share a common return path, circuit AB (pin 7) Signal Ground. Circuit AA (pin 1) Protective Ground shall be utilized to interconnect the frames of the RCE and the ERMS.

6.3 Data Exchange Protocol - Data transfer across the RCE/ERMS interface shall be controlled in accordance with Advanced Data Communications Control Procedures (ADCCP) ANSI Standard X3.66 as defined in Remote Maintenance Monitoring System Interface Control Document NAS-MD-790, Section 4, Bit-Oriented Data Link Procedures for Synchronous Communications.

In the application of NAS-MD-790 to the RCE/ERMS interface, the RCE shall emulate the functions of the MPS, polling the ERMS and controlling the flow of data. References to the MPS in NAS-MD-790 must be considered to be requirements for the RCE. References to the RMS must be considered to be in the ERMS.

A detailed interpretation of the protocol as it applies to the RCE is in Section 2.3 of this document and sections thereunder. In the application of Section 2.3 to the RCE/ERMS interface, functions listed for the MPS must be considered to be RCE requirements and functions listed for the RCE must be considered to be performed in the ERMS.

The ERMS will share the same RMS address as the RCE channel which serves it. The logical unit addresses hex 20 through 7F will be reserved for the RCE RMMS logical units and addresses from hex 80 through FE will designate ERMS logical units.

The IG module shall examine the address fields of any message arriving from the MPS. If the logical unit address represents one of the logical units of the ERMS, the IG module shall forward the message to the ERMS. In forwarding the message to the ERMS interface it shall transfer the entire message without modification to the address fields. If the logical unit address is the global address (hex FF) the IG module shall forward the message to the ERMS without modification to the address fields and in addition, it shall initiate the generation of CDR messages for the RCE channel.

Messages from the ERMS shall be transferred through the RCE channel at 300 bauds to the RCE concentrator without change to the address fields. This is suitable since the ERMS and the RCE channel will have the same RMS address.

6.4 Message Formats - The RCE must exchange messages of various types with the ERMS. The message types and their direction of flow are:

Polling Messages	RCE	to	ERMS
Priority Messages	ERMS	to	RCE
Site Data Report Messages	ERMS	to	RCE
Command Messages	RCE	to	ERMS
Portable Terminal Messages	Both directions		

The following sections specify the formats for these messages and provide some information regarding the role of each and the handling required.

6.4.1 Polling Messages - Polling is the means by which the MPS requests and controls the flow of RMMS information from the monitored facilities. The polling procedure will be as described in NAS-MD-790, Paragraph 3.1 and subparagraphs thereunder. Three polls are identified: Continuous Poll, Scheduled Poll, and Specific Poll.

6.4.1.1 Continuous Poll - The continuous poll is the supervisory command by which each level in the communications hierarchy solicits messages from levels below so that they will be available when a poll is received from above. The continuous poll message will have a format as specified in NAS-MD-790, Paragraph 4.4.1.

Interpreted for the RCE/ERMS interface, this format is:

FUNCTION	NUMBER OF BITS	FORMAT
Flag	8	0111 1110
Link Address	8	ERMS Address
Control Field	8	1000 1N(R)
Frame Check Sequence	16	FCS
Flag	8	0111 1110

Where N(R) - 3 bits - is the expected sequence number of the next received frame, and FCS is the Frame Check Sequence.

The IG module shall independently poll the ERMS, if assigned, at a rate to be established by adaptation, but in no event greater than once each five (5) seconds.

In response to the continuous poll, the ERMS will send any messages it has generated since the previous poll. These will be sent in priority sequence: 1) alarm and RTN messages, 2) state change messages, 3) terminal messages, 4) site data report messages, and 5) other unsolicited messages.

In the event no messages have been generated since the previous poll, it will respond with a Receiver Ready (RR) supervisory frame, as specified in NAS-MD-790, Paragraph 4.2.2.2. (Table 4-1)

The format for this frame is:

FUNCTION	NUMBER OF BITS	FORMAT
Flag	8	0111 1110
Link Address	8	ERMS Address
Control Field	8	1000 1 N(R)
Frame Check Sequence	16	FCS
Flag	8	0111 1110

<u>6.4.1.2 Scheduled Poll</u> - The scheduled poll is the command by which the MPS collects site data reports. The polling message is passed down through the levels of the communication hierarchy, as a command to generate the appropriate SDR messages.

The format for the scheduled poll shall be as specified in NAS-MD-790, Paragraph 4.4.2. As interpreted for the RCE/ERMS interface, this format is:

FUNCTION	NUMBER OF BITS	FORMAT
Flag	8	0111 1110
Link Address	8	ERMS Address
Control Field	8	ON(S) 1N(R)
Logical Unit Address	8	1111 1111
Delimiter	8	0000 0000
Poll Indicator	8	0000 0010
Frame Check Sequence	16	FCS
Flag	8	0111 1110

To the ERMS the scheduled poll message is a command to generate site data report (SDR) messages. The ERMS will respond to the scheduled poll message by sending a sequence of messages in priority order as identified for responses to the continuous poll message, Section 6.4.1.1.

6.4.1.3 Specific Poll - The specific poll is the means by which the MPS may retrieve performance data from a specific logical unit. The procedure is normally initiated by the MPS in response to an operator command.

The format of the specific poll message is identical to that of the scheduled poll message, except that a logical unit address is used to indicate a specific logical unit in place of the global address (hex FF) which indicates all logical units.

6.4.2 Priority Message - Priority messages are of four types: alarm messages, return-to-normal messages, state change messages, and terminal messages. The format of these messages, as received from ERMS will be as indicated below.

6.4.2.1 Alarm Message - ERMS monitors up to 32 status indications and up to 32 measurable parameters. If any of these should deviate from its normal condition, the ERMS will generate an alarm message.
The format for alarm messages will be in accordance with NAS-MD-790, Paragraph 3.4.1. This will appear at the ERMS interface as:

FUNCTION	NUMBER OF BITS	FORMAT
Flag	8	0111 1110
Link Address	8	ERMS Address
Control Field	8	ON(S) FN(R)
Logical Unit Address	8	Logical Unit ID

FUNCTION	NUMBER OF BITS	FORMAT
Delimiter	8	0000 0000
Message Function Code	8	Note 1
Data Point ID	8	Data Point ID
Condition Status	8	Note 2
Monitored Value	16	Note 3
Frame Check Sequence	16	FCS
Flag	8	0111 1110

Note 1: An alarm message is indicated by an ASCII upper case "A" for a hard alarm, lower case "a" for a soft alarm. A hard alarm is defined as representing a condition that causes equipment to become inoperable. A soft alarm represents operation outside the normal operating range.

Note 2: Condition status is a single ASCII character as defined in NAS-MD-790, Paragraph 3.3.3.2.

Note 3: Monitored value is the value of the parameter in binary code with sign in accordance with NAS-MD-790, Paragraph 3.3.4. If the data point is not a measurable parameter, a value of zero is used.

Multiple alarms from ERMS may be included in a single message by providing Data Point ID, Condition Status and Monitored Value for each.

6.4.2.2 Return-to-Normal (RTN) Message - The RTN message is used to convey that a previously reported alarm condition is no longer in an alarm state. The format for the RTN message and rules for its use are given in NAS-MD-790, Paragraph 3.4.2. The format is identical to that of the alarm message except that the Message Function Code is ASCII "B".

6.4.2.3 State Change Message - The state change message is used to report functions or parameters that are changed at a remote site as a result of RMMS or on-site operator action. The format and rules for use are specified in NAS-MD-790, Paragraph 3.4.3. This format is identical to that for the alarm message except that the "Message Function Code" is an ASCII "C".

The threshold level change message is a special case of the state change message. The format is similar to the state change message except that the "Message Function Code" is a lower case "c" and two 16 bit fields are provided to report new high limit and low limit parameters. The format and rules for use are as specified in NAS-MD-790, Paragraph 3.4.3.

6.4.2.4 Terminal Messages - The ERMS is expected to have the ability to support a portable terminal. While the normal entry point for a portable terminal at a Type I RCE site is through the RCE maintenance panel, it is possible that a maintenance person might use the ERMS capability instead. The RCE must be able to relay such messages to and from the MPS.

Such messages will have the characteristics and format specified in NAS-MD-790 Paragraph 3.4.4. At the interface between RCE and ERMS the format for such messages flowing to or from the ERMS will be:

FUNCTION	NUMBER OF BITS	FORMAT
Flag	8	0111 1110
Link Address	8	ERMS Address
Control Field	8	ON(S) FN(R)
Logical Unit Address	8	Logical Unit ID
Delimiter	8	0000 0000
Message Function Code	8	ASCII "I"
Message Text	Variable	Free Form
Frame Check Sequence	16	FCS
Flag	8	0111 1110

6.4.2.5 Command Error Message - If the ERMS should receive a message that passes all format and FCS checks, but is not interpretable, it will generate a command error message in accordance with NAS-MD-790, Paragraph 3.5.2. This message will be similar in form to the terminal message except that the Message Function Code will be an ASCII "E". The message text will be an identical copy of the message that could not be interpreted. If the resulting message should exceed the size limit, it will be truncated by the ERMS by deleting octets from the end.

6.4.2.6 Other Unsolicited Messages - Other unsolicited messages such as the Data Base Download Request, and Busy Status Message, shall be relayed to the MPS if required by the ERMS design. The format and use of such messages shall be in accordance with NAS-MD-790, Paragraph 3.5. These messages shall be considered non-priority messages in determination of the sequence for routing through the RMMS communications hierarchy.

6.4.3 Site Data Report (SDR) - The SDR is prepared in response to a scheduled poll or specific poll and it is the means by which actual status and performance measurements are reported to the MPS. It is sent to the MPS along with the CDR messages generated by the RCE.

Each SRD message shall have the format specified in NAS-MD-790, Paragraph 3.6. As interpreted for the RCE/ERMS interface, the message will have the following format:

FUNCTION	NUMBER OF BITS	FORMAT
Flag	8	0111 1110
Link Address	8	ERMS Address
Control Field	8	0 N(S) F N(R)
Logical Unit Address	8	Logical Unit Address
Delimiter	8	0000 0000
Message Function Code	8	ASCII "G" Note 1
Availability Status	8	Note 2
Data	Variable	Note 3
Frame Check Sequence	16	FCS
Flag	8	0111 1110

Note 1: If the ERMS is not operating and therefore no data are available, a lower case ASCII "g" shall be used, followed immediately by the FCS.

Note 2: Equipment availability status of the logical unit shall be indicated in accordance with NAS-MD-790, Paragraph 3.3.3.1.

Note 3: Data points of a binary nature shall be reported through one octet each, in accordance with NAS-MD-790, Paragraph 3.3.3.2. Measurable parameters shall be reported following all binary data points. Each measurable parameter shall include one octet for condition status assigned in accordance with NAS-MD-790, Paragraph 3.3.3.2 followed by two octets for the value, which shall be coded as described in NAS-MD-790, Paragraph 3.3.4. The ERMS message may include up to thirty-two (32) binary data points and up to thirty-two (32) measurable parameters.

6.4.4 Command Messages - Command messages provide a means by which certain actions at remote facilities may be initiated from the MPS or from another location by relay through the MPS. The facility or RCE channel where the action is required is designated through the address fields of the message. The specific action to be taken is designated through the command code. Typical actions, their command codes and NAS-MD-790 references are listed in Section 2.4.4. Additional command codes may be assigned if needed by the ERMS design.

Specific characteristics of the command messages may be found in NAS-MD-790, Paragraph 3.7. The format of a command message as it appears at the RCE/ERMS interface shall be:

FUNCTION	NUMBER OF BITS	FORMAT
Flag	8	0111 1110
Link Address	8	ERMS Address
Control Field	8	ON(S) PN(R)
Logical Unit Address	8	Logical Unit Address
Delimiter	8	0000 0000
Message Function Code	8	ASCII "H"
Command Code	8	See Section 2.4.4
Additional Detail	Variable	Note
Frame Check Sequence	16	FCS
Flag	8	0111 1110

Note: Command messages calling for a change of a parameter, threshold value or password require additional fields to specify the change. NAS-MD-790, Paragraph 3.7 and subparagraphs provide additional detail.

7.0 PORTABLE MAINTENANCE DATA TERMINAL INTERFACES - In support of RMMS concepts, the RCE IG Module shall provide for the use of a portable Maintenance Data Terminal (MDT) at both control facilities and at remote radio sites.

The current RMMS concept is based on the assumption that each maintenance person would be provided with a MDT to be used to:

- Obtain work assignments stored in the MPS
- Obtain recent parameter readings from the MPS
- Obtain more recent parameter readings directly from the site
- Obtain trend analyses from the MPS
- After affecting repairs or adjustments of equipment, obtain new parameter readings
- Adjust high and low threshold levels in the IG module
- Examine and/or modify site adaptation data in the IG module
- Initiate and control various test procedures in the IG module
- Communicate with other maintenance personnel by sending messages through the MPS
- Make log entries

The MDT will consist of a portable, IBM compatible microprocessor,using MS-DOS 3.2. It will be equipped with a communications interface capable of operation at 2400, 4800, or 9600 bauds in asynchronous mode. It will also be equipped with flexible disks which will contain the software to tailor the equipment for operation at RADAR facilities, NAVAID sites,remote communication sites and other FAA installations. The flexible disks will contain specific software needed to:

- Assist the maintenance person in preparation of properly formatted messages.
- Convert report messages in compressed binary form to ASCII coding and format suitable for display, including tabular organization and labels for each item.

Immediately on entering a remote site the maintenance person will log on with his MDT, establishing communication with the MPS. After logging on, he could use the MDT for exchanging messages with the MPS or for performing various local functions. Immediately before leaving the facility he will log off from the central MPS. The log on/log off procedure will serve to identify the maintenance person, authorize access to data and control procedures, authenticate any control actions performed, and identify as illegitimate any entry into the site that is not associated with a correct log-in procedure.

To provide these capabilities, an interface for the MDT shall be provided at each RCE equipped facility, including both control facilities (Type II) and remote sites (Type I). The functional location of the portable MDT interfaces is shown in Figure 7-1.

This section provides the characteristics of the portable MDT interfaces. The mechanical characteristics are discussed including the physical location and connector characteristics. Electrical characteristics of the interfaces are provided followed by protocol requirements. The final paragraph discusses format requirements for messages to and from the portable MDT.

7.1 Mechanical Characteristics - An interface shall be provided for a portable MDT at each RCE site, including both control (Type II) facilities and remote (Type I) sites. The interface at each location shall be in accordance with EIA Standard RS-232-C, with specific characteristics listed below:

7.1.1 Physical Location - The interface point shall be in the form of a panel mounted receptacle in the RCE maintenance panel. The connector shall be a 25 pin receptacle (Amphenol Part 17-80250-15 or equivalent) containing female contacts and a male shroud. The receptacle shall be provided as part of the RCE. The mating male connector and cable will be provided as part of the MDT, to be furnished by the government.

7.1.2 Control - A control capability shall be provided in the RCE to cause the MDT to be associated with any of the assigned channels. When first connected, the MDT will normally be assigned to a lightly loaded channel, as specified by the FAA, for use in site adaptation and maintained for communication with the MPS.

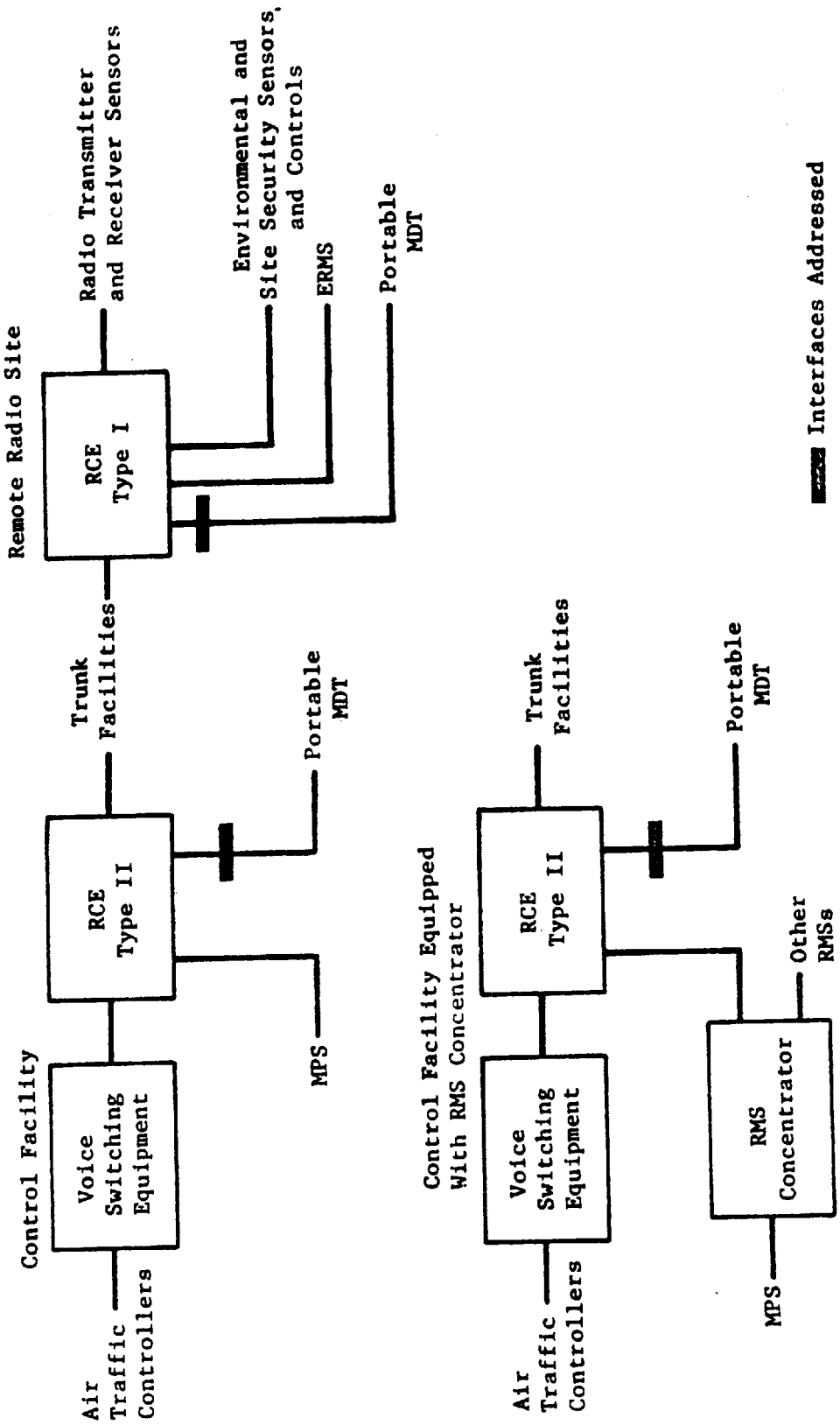

Figure 7-1

Portable Maintenance Data Terminal Interfaces

7.2 Electrical Characteristics - The interfaces with the portable MDT shall in all cases be in accordance with EIA Standard RS-232-C, Interface Type D. In the application of this standard, the MDT shall be considered to be the Data Terminal Equipment (DTE) and the RCE shall be considered to be the Data Communications Equipment (DCE). Specific circuits to be implemented shall be:

7.2.1 Data Circuits - Data transfer from the MDT to the RCE shall take place over the BA (pin 2) circuit in the RS-232-C connector. Data transfer from the RCE to the MDT shall use the BB (pin 3) circuit. Both shall use circuit AB (pin 7) as a common return circuit. All data transfers shall take place at 2400 bauds in asynchronous mode. The physical interface shall support the simultaneous exchange or octets transmitted in 10 intervals (one start, 8 data and one stop interval) of equal duration. Data characters shall be transferred low order bit first in accordance with ANSI Standard X3.15.

7.2.2 Control Circuits - The following circuits shall be implemented to control the flow of data across the interface:

CIRCUIT	PIN	FROM	TO	MEANING
CA	4	MDT	RCE	Request to Send - to indicate that the MDT has data to be transferred to or through the RCE.
CB	5	RCE	MDT	Clear to Send - to indicate that the RCE data channel is available.
CC	6	RCE	MDT	Data Set Ready - to indicate that RCE is on and it is ready to accept data.

CIRCUIT	PIN	FROM	TO	MEANING
CF	8	RCE	MDT	Receive Line Signal Detector - the RCE shall provide a signal simulating the signal normally provided by a modem to indicate the presence of a signal on the line.
CD	20	MDT	RCE	Data Terminal Ready - to indicate that the MDT is connected with on and will respond to polls and accept messages.

Other control circuits in the RS-232-C interface may be utilized if required by the contractor's design, however, it shall be the responsibility of the contractor to assure proper operation of the interface. At the contractor's option, Pin 8 (CF) and Pin 6 (CC) may be tied together on the RS-232 Connector to provide the signal for the Receive Line Signal Detector circuit.

All the above data and control signals shall share a common return path, circuit AB (pin 7) Signal Ground. Circuit AA (Pin 1) Protective Ground shall be utilized to interconnect the frames of the RCE Concentrator and MDT.

7.3 Data Exchange Protocol - Data transfer across the RCE/MDT interface shall be controlled following the procedures delineated in American National Standard Procedures for the Use of the Communication Control Characters of American National Standard Code for Information Interchange in Specified Data Communication Links (ANSI Standard X3.28-1976) Subcategories 2.5 (Two-way Alternate, Nonswitched Multipoint with Centralized Operation and Fast Select), and D-1 (Message Independent Blocking, with Cyclic Checking, Alternate Acknowledgements, and Transparent Heading and Text), as interpreted in NAS-MD-790, Appendix A. In the application of Appendix A to this interface, referenced to the MPS shall be interpreted as referring to the RCE; references to the RMS shall be interpreted as referring to the MDT. Since NAS-MD-790 addresses interfaces with the MPS, additional interpretation is required to apply the protocol to the MDT interface with an RMS (RCE). The additional interpretation needed is provided in the paragraphs that follow. Where not stated otherwise, the provisions of NAS-MD-790, Appendix A shall govern.

In the application of X3.28 procedures to the RCE/MDT interface, the RCE, in its role as an RMS, shall be the controlling station. In this role, the RCE shall send polling sequences to the MDT to solicit the delivery of messages and selection sequences to indicate that a message to the MDT will follow. The MDT will respond to these sequences in the manner set forth below.

The following paragraphs describe the block format to be used for all message transfers. Then they specify the polling and selection procedures by which the RCE shall control the transfer of messages across the interface.

7.3.1. Block Format - Messages to be transferred in either direction across the RCE/MDT interface shall be organized into blocks of up to 256 characters (bytes or octets) for purposes of error checking and error correction by repeated transmission. The block format at the RCE/MDT interface shall be :

FUNCTION	NUMBER OF CHARACTERS	FORMAT
Flag	2	DLE SOH Note 1
Link Address	1	Hex 21 Note 1
Flag	2	DLE STX
Delimiter	1	Hex 00
Msg Funct Code	1	ASCII "I"
Text	Variable	Note 2
Flag	2	Note 3
CRC	2	Note 4

Note 1: Used only in the first block of a message.

Note 2: The text portion of a message will consist of textual (ASCII coded) or binary coded information, similar to the format of a Site Data Report. The length of the text shall be such that the total block length, including all characters used in the cyclic redundancy check (CRC) generation as defined in X3.28 paragraph 4.3.2, will not exceed 256 characters.

Note 3: The closing flag will be DLE ETB, if an intermediate block, or DLE ETX, if it is the last block of a message.

Note 4: The cyclic redundancy check sequence shall be generated in accordance with the CCITT generator polynomial (CCITT recommendation V.41) as described in X3.28, Section 4.3.2.

7.3.2 Control of Data Transfer - The RCE shall control the flow of messages to and from the MDT through use of polling and selection sequences.

7.3.2.1 Polling and Collection - When an MDT is connected, as indicated by the Data Terminal Ready signal (RS-232-C Interface, pin 20), the RCE shall poll the MDT, at least once each five (5) seconds. The poll shall consist of a sequence of three characters:

FUNCTION	NUMBER OF CHARACTERS	FORMAT
Link Address	1	Hex 21
Link Address	1	Hex 21
Enquiry	1	ASCII "ENQ"

Since the sequence has no CRC, the address information is repeated to provide some check of accuracy.

The MDT will respond to a correct sequence by sending any message that has been composed, stored in memory and released by the MDT operator. Message composition may be through keyboard input using the edit functions of the MDT, or through the exercise of a sequence of screens or menus that will query the operator for the specific information needed to organize a particular message type.

When polled, the MDT will respond by sending the first block of a related message. Upon receipt of the closing flag of the first message block, the RCE shall check the block for accuracy in accordance with the specified CRC procedures. If the check indicates accurate receipt, the RCE shall respond with ACK 1 (a two character sequence consisting of ASCII "DLE" followed by ASCII "1"), allowing the MDT to proceed to the second block in sequence. Response to the second block, and any subsequent even numbered block, shall be ACK 0 (ASCII "DLE" followed by ASCII "0"). Response to subsequent odd numbered blocks shall be ACK 1. Failure of the CRC check shall cause a NAK indication (ASCII "DLE", ASCII "NAK") which will cause the erroneous block to be repeated, followed by any subsequent blocks.

Upon receipt and acknowledgment of the last block of the message (as indicated by the DLE ETX sequence) the RCE shall resume its polling procedures. No more than one message will be sent in response to a poll.

If the MDT has no message to transmit it will respond to the polling sequence with end of transmission (ASCII "DLE", ASCII "EOT").

The MDT will not respond to an invalid poll. In the event no response to a poll is received, the RCE shall invoke Retry Procedure 1 in accordance with NAS-MD-790, Paragraph A-2.

The RCE shall not poll while a message is being transferred to or from the MDT or when the MDT is not connected or in a power off condition.

7.3.2.2 Selection and Message Transfer - If the RCE has a message for the MDT, either generated locally in response to a query from the operator or relayed from the MPS and no message transfer is currently in process, it shall select the MDT by sending the following sequence:

FUNCTION	NUMBER OF CHARACTERS	FORMAT
Link Address	1	Hex 51 Link
Address	1	Hex 51
Enquiry	1	ASCII "ENQ"

On receipt of a valid selection sequence, the MDT will respond by returning ACK 0. On receipt of ACK 0 the RCE shall send the first block of the message. If the first block is received accurately, as indicated by the check of the CRC character, the MDT will respond with ACK 1 to signal that the RCE may proceed to the second block. Failure of the check will be a NAK to signal that the block should be repeated. Responses to accurately received blocks will be ACK 0 and ACK 1 for even and odd numbered blocks, respectively.

If the MDT is not able to accept a message, it may respond to the selection sequence with NAK. This signals the RCE to invoke Retry Procedure 1.

If the MDT has a priority message to send while it is receiving a message from the RCE, it may abort the transfer using the Reverse Interrupt (RINT) procedure as described in NAS-MD-790, Paragraph A-3.3.2.

If either the RCE or MDT is unable to continue receipt of a message after the message transfer has started, the Temporary Interrupt (WACK) procedure may be used. This procedure is described in NAS-MD-790, Paragraph A-3.3.3.

7.4 Message Format - All exchanges between the RCE and MDT shall be by message. This section identifies the classes of messages needed.

A complete set of RCE related message formats shall be provided in conjunction with the interface control document (ICD) to be prepared by the contractor(s) as required by the RCE specification, FAA-E-2738, and the contract schedule.

It is expected that the MDT will be used for the following functions:

- Local setup
- MPS Log on/Log off
- Message exchange with the MPS
- Channel related functions
- Communications to/from other RMMS sites
- Administrative communications

Software to run on the MDT to aid the operator in the preparation of messages, their manipulation and release, as well as the control and display of received messages, shall be designed to operate within and under control of a menu system to be provided by the Maintenance Automation Program Division (MAPD).

The following paragraphs discuss these functions and the message formats required to support them.

7.4.1 Local Setup - As indicated above, the MDT will be used at a site for various purposes. Some of these uses involve communications with the MPS while others require association with one of the channels. Communication with the MPS is accomplished through one of the channels (RMS address). The channel to be used will be a lightly loaded channel to be assigned at each site by adaptation. In the event this preferred channel is inoperable, the operator must be able to reassign the function to an alternate channel. Thus the user must be able to assign the MDT to any of the installed channels and to select remote communications with the MPS or local operation with the channel itself.

If the channel selection and assignment are to be made through keyboard entry, a specific message will be needed to pass this information to the RCE and a response message will be needed to indicate compliance. Specific formats for these messages shall be developed by the contractor(s).

7.4.2 MPS Log On/Log Off - Immediately on entering a site, a maintenance person must log on to the MPS. Just before departing, he must log off. These procedures will be accomplished by sending appropriate messages to the MPS. Information in the message will identify the individual. A password, to be inserted into the message prior to transmission, will be used to verify the individual's authority to access the RCE. The address generated as the message passes through the RMS communication facilities will serve to identify the facility being serviced.

The formats of the required messages will be provided by the MAPD, to assure that identical procedures will be used at all types of RMS sites.

7.4.3 Message Exchange with the MPS - Once logged on, the maintenance person is expected to use the MDT to communicate with the MPS to access various types of information, such as:

- The last CDR for a particular logical unit
- Trend history for a particular logical unit
- Log entries to indicate work done at a logical unit
- Failure trends for a particular equipment type

It is expected that the MAPD will provide formats for the request messages and the MPS responses in order to assure consistency between all types of RMSs. Suitable software shall be provided by the RCE contractor(s) to expand the measurements and threshold values included in CDR messages into decimal form and to display them in tabular format including the names and units for all parameters.

A complete list of reports needed to support the RCE Mean-Time-To-Restore (MTTR) requirements, as defined in the RCE Specification, FAA-E-2738A, Section 3.7.2.1 shall be prepared by the contractor(s). Data items to be included in each report shall be listed. Formats for the resulting reports, as well as the request messages, shall be prepared by the RCE contractors following the RMMS guidelines. The resulting formats and procedures shall be documented in the ICD.

Suitable software, to run on the MDT under the menu structure to be provided by the MAPD, shall be provided by the RCE contractor(s) to assist the maintenance person in generating properly formatted RCE messages and to convert the report messages related to the RCE and other systems for which the RCE performs monitoring functions to understandable tabular displays.

7.4.4 Channel Related Functions - The MDT shall also be used to examine and modify site adaptation data and to initiate, control and analyze test procedures needed to quickly isolate faults. This shall include but not be limited to:

- Examination and revision of site adaptation data
- Examination of current parameter measurements
- Initiation of configuration changes
- Initiation and control of maintenance procedures
- Analysis of test results

Software to run on the MDT, within and controlled by the MAPD menu structure, and the associated message formats shall be developed by the RCE contractor(s) as required.

7.4.5 Communications To/From Other RMMS Sites - The MDT will also be used to provide communications with other sites in order to:

- o Obtain up to date parameter measurements
- o Initiate remote reconfiguration or test actions
- o Provide communications with personnel at other sites

All such communications will be relayed through the MPS.

The text of messages to be relayed to other sites will contain destination identification and any command or other information to be conveyed. The destination information will include a facility designation (possibly the FAA location identifier) and equipment designation (such as the type, make, model and serial number) to identify a particular logical unit. Tables to convert this information to an RMMS address and the software required to relay the message will be maintained in the MPS.

The commands and/or other information needed will be related to the type of the remote RMS and will be documented in the ICDs for each RMS type.

The rules for formatting and initiating messages to be relayed to other sites, as well as any MDT software needed to initiate such messages, will be provided by the MAPD.

7.4.6 Administrative Communications - The MDT will also be used for administrative communications. This will generally consist of messages to and from the supervisor or other personnel at the maintenance sector for the following purposes:

- o To obtain work assignment
- o To obtain permission to take a frequency or channel out of service for repair or test
- o To report unusual conditions

Administrative messages will be free form or fixed format messages, but they must adhere to the format restrictions given in NAS-MD-790. Guidelines for the use and form of such messages will be developed by the MAPD.