Ministry of Defence
Defence Standard 00-25

Issue 1 Publication Date 30 July 2004

Human Factors for Designers of Systems

Part 19: Human Engineering Domain

Technical Guidance and Data

AMENDMENTS ISSUED SINCE PUBLICATION

AMENDMENT NUMBER	DATE OF ISSUE	TEXT AFFECTED	SIGNATURE & DATE

Revision Note

This revision of Def Stan 00-25 is primarily intended to rectify functional difficulties.

Details of the changes in all Parts can be obtained by contacting the D Stan Help desk or web site (http://www.dstan.mod.uk).

Historical Record

List of Contents

1 Human Engineering HFI Domain 9

1.1 Warning 9

2 System Issues (User Centred Design) [HFE1] 9

2.1 Technical Guidance ... 9
2.1.1 User Centred Design 9
2.1.2 Design of Equipment 10
2.1.3 Stages of Design in Smart Acquisition 12
2.1.4 Systems Approach to Human Factors Operation 13
2.1.5 Generic Human Factors Design Checklist 15

2.2 References ... 32

2.3 Referenced Documents ... 32

2.4 Other Useful References ... 32

3 General Ergonomics [HFE2] 33

3.1 Technical Guidance ... 34

3.2 References ... 34

4 Workspace Design [HFE3] 36

4.1 Introduction ... 36

4.2 Scope ... 37

4.3 Technical Guidance ... 37
4.3.1 Workspace and Workplace Design Principles 37
4.3.2 Approach and Methods for Workspace and Workplace Design 71

4.4 Definitions ... 82

4.5 References ... 83

4.6 Other Useful References ... 84

5 Lighting [HFE4] 85

5.1 Introduction ... 86

5.2 Scope ... 86

5.3 Technical Guidance ... 86
5.3.1 Photometry and Colorimetry 86
5.3.2 Lighting Design Practice and Application 90
5.3.3 Specific Military Applications 121

5.4 Summary of Luminaires, their Associated Lamp Types and their Typical Use for Particular Activities or Environments ... 124

5.5 Definitions ... 127

5.6 References *134*

6 Human Computer Interface/Interaction [HFE5] **136**

6.1 Introduction *137*

6.2 Scope *138*

6.3 Health and Safety *138*

6.4 Usage *138*

6.5 Applicability *138*

6.6 Technical Guidance *139*

6.6.1 HCI Design Process 139
6.6.2 Interaction 143
6.6.3 Interface Requirements 169
6.6.4 Essential HCI Development Activities 176
6.6.5 Quality and Compliance 182

6.7 Definitions *182*

6.8 References *185*

6.9 Referenced Documents *185*

6.10 Other Useful References *186*

7 Controls/Control Types [HFE6] **188**

7.1 Introduction *189*

7.2 Scope *190*

7.2.1 Identification System Used 190
7.2.2 Control Function 192
7.2.3 Control Types 192
7.2.4 Individual Controls 193

7.3 Technical Guidance *199*

7.3.1 Selection for Specific Applications 199
7.3.2 Population Stereotypes 192
7.3.3 Preferred Physical Specifications for Continuous Variable Controls 203
7.3.4 Preferred Physical Specifications for Discrete Controls: Rotary 211
7.3.5 Preferred Physical Specifications For Data Entry Controls 233
7.3.6 Touch Displays (C7.26) 239

7.4 Definitions *246*

7.5 References *247*

8 Labelling [HFE7] **248**

8.1 Technical Guidance *249*

8.2 References *249*

9 Information Displays [HFE8] **252**

9.1 Technical Guidance *252*
9.1.1 Visual Information Displays 252
9.1.2 Coding 270
9.1.3 Emphasising Text 295
9.1.4 Field of view 302
9.1.5 Auditory Information Displays 317

9.2 Checklist for Auditory Information Design *332*
9.2.1 Personnel 332
9.2.2 Signal Meaning 332
9.2.3 The Environment 333
9.2.4 Signal Characteristics 333
9.2.5 Tests, Trials and Evaluation 333

9.3 Definitions *334*

9.4 Definitions Related to Visual Information Displays *334*

9.5 Definitions Related to Auditory Information Displays *339*
9.5.1 Nomenclature for Alarms and Warnings 342

9.6 References *343*

9.7 References Relating to Visual Displays *343*

9.8 References Relating to Auditory Displays *346*

9.9 Other Useful References *348*

10 Maintenance and Access Ergonomics [HFE9] 351

10.1 Introduction *352*

10.2 Scope *352*

10.3 Technical Guidance *352*
10.3.1 Maintainability 352
10.3.2 Environmental Conditions 355
10.3.3 Layout of Units 355
10.3.4 Designing for Human Maintenance 356

10.4 Maintainability and Maintenance Checklists *361*

10.5 Checklist of maintenance design factors *362*

10.6 Definitions *364*

10.7 References *364*

11 Accommodation and Habitability [HFE10] 365

11.1 Technical Guidance *365*

11.2 References *367*

List of Figures

Figure 2.1:1: Stages of Design in Smart Acquisition 13
Figure 4.3:1: Seat Reference Point 38
Figure 4.3:2: Fit Based on Static Dimensions (Left), Dynamic Dimensions (Right) 39
Figure 4.3:3: Effective Reach Parameters 40
Figure 4.3:4: Some Examples of Environment Influences on Body Dimensions 44
Figure 4.3:5: Console Incorporating Walkway or Emergency Lighting 46
Figure 4.3:6: Seat Profiles 48
Figure 4.3:7: Suggested Dimensions for a Seated Operator's Workplace 51
Figure 4.3:8: Horizontal Wrap-Around Console 53
Figure 4.3:9: Tilting Chair Type with Backrest (Right) Commercial Chair type with Adjustable Backrest (Left) 54
Figure 4.3:10: Typical Work Seat Design 56
Figure 4.3:11: Anthropometric Considerations in Designing Seats for Automobile Drivers 58
Figure 4.3:12: Suggested Parameters for a Standing Operator's Workspace 61
Figure 4.3:13: Drafting and Plotting Board Dimensions (Based on an approximate 5th percentile man) 63
Figure 4.3:14: Sit-Stand Workstations 66
Figure 4.3:15: Anthropometric Data for Workspaces 70
Figure 4.3:16: Diagrammatical Representation of Foam Model 76
Figure 4.3:17: Representation of 'Lego ®' Type Model 76
Figure 4.3:18: Sammie CAD 79
Figure 5.3:1: Illustration of Basic Light Concepts 87
Figure 5.5:1: Visual Angle 133
Figure 7.2:1 Rotary, Linear and Multi axis Operation 194
Figure 7.2:2 Rotary, Linear and Push Button Operations 196
Figure 7.2:3 Key, Voice Activation, On Screen & Off Screen 198
Figure 7.3:1 Desirable functions of Controls, Types A & B 190
Figure 7.3:2 Desirable Characteristics of Control Types A & B 191
Figure 7.3:3: Knob Dimensions 193
Figure 7.3:4: Knob Scale Markings 194
Figure 7.3:5: Ganged Knob 206
Figure 7.3:6: Thumbwheel Dimensions 197
Figure 7.3:7: Single Rotary Knob Operation 198
Figure 7.3:8 Crank Dimensions 199
Figure 7.3:9: Handwheel Dimensions 201
Figure 7.3:10 Lever Dimension 203
Figure 7.3:11: Heavy Duty Lever 204
Figure 7.3:12 Sliding Lever Dimensions 205
Figure 7.3:13: Sliding Lever 206
Figure 7.3:14 Pedal Dimensions 207
Figure 7.3:15: Joystick Dimensions 209
Figure 7.3:16 Joystick input/output Control Law 210
Figure 7.3:17: Selector Switch Dimensions 211
Figure 7.3:18 Desirable Switch Positioning 212
Figure 7.3:19 Thumbwheels Dimensions 213
Figure 7.3:20 Key Operated Switch Dimensions 215
Figure 7.3:21: Keylock Location 217

Figure 7.3:22 Keylock Dimensions 218
Figure 7.3:23 Toggle Switch Dimension 219
Figure 7.3:24 Selection Lever dimensions 221
Figure 7.3:25 Push-Pull Control Dimensions 223
Figure 7.3:26 Slide Switch Dimensions 225
Figure 7.3:27 Push Button Dimensions 227
Figure 7.3:28: Legend Switch Dimensions 229
Figure 7.3:29: Legend Switch Displacement Resistance 230
Figure 7.3:30: Foot Operated Switch Dimensions 231
Figure 7.3:31: Rocker Switch Dimensions 232
Figure 7.3:32: Keyboard Dimensions 233
Figure 7.3:33: Keypad Dimensions. 235
Figure 7.3:34: Keyset Dimensions 236
Figure 7.3:35: Multi-Keyset Dimensions 238
Figure 7.3:36: Touch Display 240
Figure 7.3:37: Light Pen Dimensions 241
Figure 7.3:38: Stylus Dimensions 242
Figure 7.3:39: Mouse Dimensions 243
Figure 7.3:40: Rolling Ball Dimensions 245
Figure 9.1:1: Task Description of a Hypothetical Missile System, Using HTA 256
Figure 9.1:2: Control Loop Between Operator and Display 257
Figure 9.1:3: Types of Mechanical Dynamic Quantitative Display 259
Figure 9.1:4: Recommended Sizes of Scale Markers 261
Figure 9.1:5: Methods of Adding Qualitative Coding to Quantitative Displays 263
Figure 9.1:6: Examples of Display Grouping using Human Factors Principles of Proximity and Similarity 281
Figure 9.1:7: Examples of Display Arrangement using Human Factors Principles of Continuation and Closure to Facilitate Check-reading 282
Figure 9.1:8: Optimum and Maximum Positions for Displays in the Visual Field, Allowing for Eye Movement, Head Movement and Eye and Head Movement (LOS = Line of Sight) 303
Figure 9.1:9: Height of FPD Characters 307
Figure 9.1:10: The Auditory Communication Window 320
Figure 9.1:11: Component Patterns for an Advanced Auditory Warning Sound 324
Figure 9.1:12: The Time Course Of A Complete Auditory Warning 325
Figure 10.3:1: Human Factors at the Design Stage 354
Figure 03:2: Unit Attachment 357
Figure 10.3:3: Unit Identification 357
Figure 10.3:4: Case Design 360

List of Tables

Table 2.1:1: Functional Requirements 16
Table 2.1:2 Functional Requirements 19
Table 2.1:3: Information Requirements 21
Table 2.1:4 Physical Demands 25
Table 2.1:5: Physical control and control devices 26
Table 2.1:6: Workspace and User Population 26
Table 2.1:7: Material Requirements 27
Table 2.1:8 Workplace Environmental Demands 32
Table 4.3:1: Anthropometric Data for Common Working Positions 68
Table 5.3:1: Example of Activities/Interiors Appropriate for Each Maintained Illuminance 93
Table 5.3:2: Maintained Illuminance Flow Chart 94
Table 5.3:3: The Glare Index Rating Scale 99
Table 5.3:4: Reflectance for Interior Environments 107
Table 5.3:5: Principal Types of Lamp 108
Table 5.3:6: Lamps Typically Used for Particular Activities 109
Table 5.3:7: Illuminances Required for Different Tasks in Military Fighting Vehicles 122
Table 6.6:1: Risk Identification Requirements and Definitions 141
Table 6.6:2: HCI Related Operability Risk Assessment 142
Table 6.6:3: Summary of Dialogue Styles 154
Table 6.6:4: Summary of Gross Ranges of HCI Response Times. Refer to Reference [157] for further information. 162
Table 6.6:5: Examples of HCI Response Times Which Will Usually be Acceptable 163
Table 6.6:6 Summary of HCI Input Devices for Generic Dialogue Tasks 171
Table 6.6:7: Summary of Considerations Relating to the Selection of HCI Print Devices 172
Table 7.1:1: Compatibility Principles 190
Table 7.2:1: Classification & Identification of Control Devices 191
Table 7.3:1: Ganged Knob Settings 206
Table 7.3:2: Ganged Knob Dimensions 206
Table 7.3:3: Displacement Resistance 207
Table 7.3:4: Lever Handle Diameters 204
Table 9.1:1: Recommended Sizes of Scale Markers 260
Table 9.1:2: Common Associations for Colours 273
Table 9.1:3: Summary of Techniques for Emphasizing Text 295
Table 9.1:4: Examples of Icon Styles 299
Table 9.1:5: Character Size and Viewing Distance 305
Table 9.1:6: Character Size and Luminance 307
Table 9.1:7: Auditory Signal measurement and Listening Test Methods 331
Table 10.3:1: Handle Clearance Dimensions (mm) 358
Table 10.3:2: Recommended Height/Weight Lift Limits 359
Table 10.3:3: Maintenance Access Dimensions (mm) 361
Table 10.4:1: Maintainability Requirements Check List (adapted from BS 6548) 362
Table 10.5:1: Maintenance Design Factors Checklist (adapted from Salvendy: 1997) 363

1 1. Human Engineering HFI Domain

The technical areas presented within the human factors engineering domain are as follows:

a. HFE1 System Issues (User Centred Design)
b. HFE2 General Ergonomics
c. HFE3 Workspace Design
d. HFE4 Lighting
e. HFE5 Human Computer Interface/Interaction
f. HFE6 Controls/Control Types
g. HFE7 Labelling
h. HFE8 Information Displays
i. HFE9 Maintenance and Access Ergonomics
j. HFE10 Accommodation and Habitability

1.1 Warning

The Ministry of Defence (MOD), like its contractors, is subject to both United Kingdom and European laws regarding Health and Safety at Work, without exemption. All Defence Standards either directly or indirectly invoke the use of processes and procedures that could be injurious to health if adequate precautions are not taken. Defence Standards or their use in no way absolves users from complying with statutory and legal requirements relating to Health and Safety at Work.

2 System Issues (User Centred Design) [HFE1]

This technical area is concerned with ensuring the development of truly integrated systems that accommodate both the physical and cognitive limitations and capabilities of the end-user population.

This area covers system integration and user-centred design issues within the context of visual displays, interactive systems, control centres and rooms, mental workload and so on. Also, this area covers human-centred design processes, the software lifecycle for systems with the Land, Sea, Air and Nuclear systems. Human engineering guidelines are included as is the application of human engineering to systems and equipment.

For further information, consult Part 15 – Principles and Process.

This Section was created in July 1989 and edited in August 2003.

2.1 Technical Guidance

2.1.1 User Centred Design

A ‘user-centred design’ approach requires that the design of equipment and systems is based on understanding the needs and characteristics of its users. Ergonomics provides a structured approach to user-centred design in terms of methods and research techniques and accommodates human adaptability and diversity. The approach to design is empirical and the design process is iterative and evolutionary.

Task analysis provides a structured method to investigate task and actions within the work environment. User trials are conducted to test the existing work system and the proposed solution. User trials are used to identify potential modifications which can be re-tested. The process is repeated until an optimal design solution evolves whilst ensuring that usability is assessed across a representative range of SMEs.

Achieving fully integrated user-centred system design is a complex and lengthy process and consists of overlapping development processes. Such a development process should:

a. **Be user centred** – involve users throughout the development process. This can be in terms of performing observation studies, creating a user model to having users involved in the design process.

b. **Integrate specialist knowledge** – this refers to the different disciplines within Human Factors but can be extended to users and their specialist domain/task knowledge. This can also refer to specialist tools that support the development process. This sort of knowledge can ensure that a job is adequately reflected in the design to ensure a smooth human-interaction.

c. **Be an iterative design process** – this is essential to ensure that an optimal design solution evolves from the development process. Continual evaluation of all aspects of the design and requirements specification should ensure an effective and efficient design solution.

2.1.2 Design of Equipment

2.1.2.1 Equipment (Hardware) Design

The purpose of equipment (hardware) design is to ensure the safe, efficient and reliable operation of the equipment by users and that the users will not be harmed during such operation, or cause equipment damage. In this context the 'user' includes the operator(s), support personnel and public.

2.1.2.2 Method

The design of the equipment, workstation, console, control board etc. shall begin by addressing the agreed anthropometric percentile range of the user population (see Part 17: P3).

Based upon the operational requirements, the controls and displays should be selected for positioning on the equipment surfaces or panels (see Part HFE5, 6 & 8 of Part 19).

The equipment controls and displays shall be arranged on the surfaces or panels according to the ergonomic principles of workstation layout (see also Part19: HFE3, HFE6 and HFE 8).

Although the four principles a, b, c and d as follows (not mutually exclusive) may seem to the designer to be trivial, even pedantic, it is well established that their proper application improves the ease of operating equipment. An ergonomic layout of controls and displays is especially beneficial in demanding situations when a weary or stressed operator may revert to 'stereotyped' behaviour and any adaptation that he may have made to awkward features of

the design may be lost. As an aid to control/display layout it is recommended that the designer use the diagrammatic technique known as link analysis (see Part 15).

a. Functional grouping: the most common panel layout practice is to provide clearly distinguishable functional groupings of panel components, e.g. engine instrumentation, weapons controls, communications. These groups of related components should be made distinguishable from each other by using labelling, lines of demarcation, spacing, and variously shaded panel areas.

b. Sequence of operation: when an operator observes events and selects control options in a fixed sequence of operations, control panels lend themselves to sequential arrangements of control/display components. Sequences from left-to-right and top-to-bottom are helpful in ensuring that all operational actions are made in the proper order. Application of this principle minimizes operator movements required in performing time-critical or safety-related operations. Related to arranging components sequentially are mimic displays (see Part19: HFE8).

c. Importance; this principle emphasizes placing the most important controls and displays within the primary field of view around an operator's line-of-sight (see Part HFE8) and reach envelope (see Part 17: P3).

d. Frequency of use: the controls and displays are provided a level of availability which matches their frequency of use, and sometimes importance.

If the system being designed has to be carried (i.e. it is a portable system) the designer shall give consideration to human strength and lifting capabilities (see Part 17: P3 and Part 19: HFE9).

The design team should take into account, when designing the system, how it will be maintained and make adequate provision for ease of access, connecting/disconnecting components, labelling, and user manuals (see Part 19: HFE9).

If the system being designed emits noise, heat, cold, radiation, vibration or any other potential hazard, (e.g. toxic fumes) the design team shall ensure that the levels are safe or that adequate protection is provided (see Part HHA). The climatic conditions in which the equipment is required for operation should also provide a habitable environment for the crew. Health and safety implications are linked to considerations of the functional problems associated with task sharing, supervision, allocation of function and the design to implement this effectively.

2.1.2.3 Equipment (Software) Design

For further information consult Part HFE8 of this Defence Standard. The major topics that have to be considered are as follows:

a. Data organization; information coding (shape, colour, brightness, flashing, etc), information density, labelling, data formats (tabular numeric, alphanumeric, textual and graphical data) and screen layout.

b. Dialogue mode: choice of mode (i.e. command language, menu selection, form-filling, computer inquiry, query language, natural language), dialogue design (structure, nomenclature, selection codes, abbreviations, defaults, etc).

c. Feedback and control: system messages (status, errors), hard-copy output, user control, error correction and recovery, help facilities.

2.1.3 Stages of Design in Smart Acquisition

The HFI management process follows the structure of Smart Acquisition in general, from Concept through to the Disposal Phase. The following overview of HFI lifecycle activities applies, also see Figure 2.1:1.

Concept

HFI must begin in the Concept phase, with an analysis of human issues related to the acquisition of the proposed capability, and an assessment of the associated risks and requirements. This process is known as Early Human Factors Analysis (EHFA). The issues drive detailed HFI planning for subsequent phases. The HFI objective is to ensure that the issues are fairly reflected in the Initial Gate submission.

Assessment

In Assessment, more detailed work explores and quantifies the HFI issues and risks, gathering information about user tasks, working conditions and expected performance. Major issues, such as manpower reduction, workload, performance shortfalls or safety are assessed for different options. Contractors develop HFI aspects of their potential solutions, supported by demonstrations and other evidence. MoD's HFI objective is to ensure that contractors clearly focus on the human-related issues, and that HFI results are fairly represented in the Main Gate submission.

Demonstration

After Main Gate, specifications are refined to ensure robust HFI content, with clear human performance targets. HFI concerns must be included in the down-selection criteria for equipment characteristics, associated services, overall integration and the process offered to develop and deliver the solution and reduce risks. The IPT provides access to user expertise to support the contractor's HFI team.

Manufacture

The contractor HFI team will lead on most aspects of equipment HFI, with MoD ensuring integration with training development, tactics development, support strategy, etc. The MoD tracks contractor-provided evidence, with increasing input from representative end-user trials in order to build confidence in equipment operability, leading to acceptance and subsequent hand-over to DLO.

In-Service
Declaration of In-Service Date (ISD) follows demonstration of effective integration of the equipment with the human component (personnel, procedures, support and training regimes) under operational conditions. While in service, HFI evaluation helps to identify any human-related performance shortfalls or failures of human-equipment integration. Where capability increments are proposed the HFI process repeats in microcosm of the earlier phases.

Disposal
The aim is to dispose of the equipment efficiently, effectively and safely. HFI involves assessment of health and safety issues of the disposal process.

The rest of this section provides the details of the high-level HFI objectives that are supported by the HFI mechanisms and activities described in this Guide (and, to some extent, within STGP 11). These high-level objectives are the responsibility of the HFI Focus but the activities required to achieve them may be delegated to other HFI specialists within the IPT as required by the project. For example, the identification of requirements and the assessment of risk may be managed by the HFI Focus but may be generated by the HF Specialist.

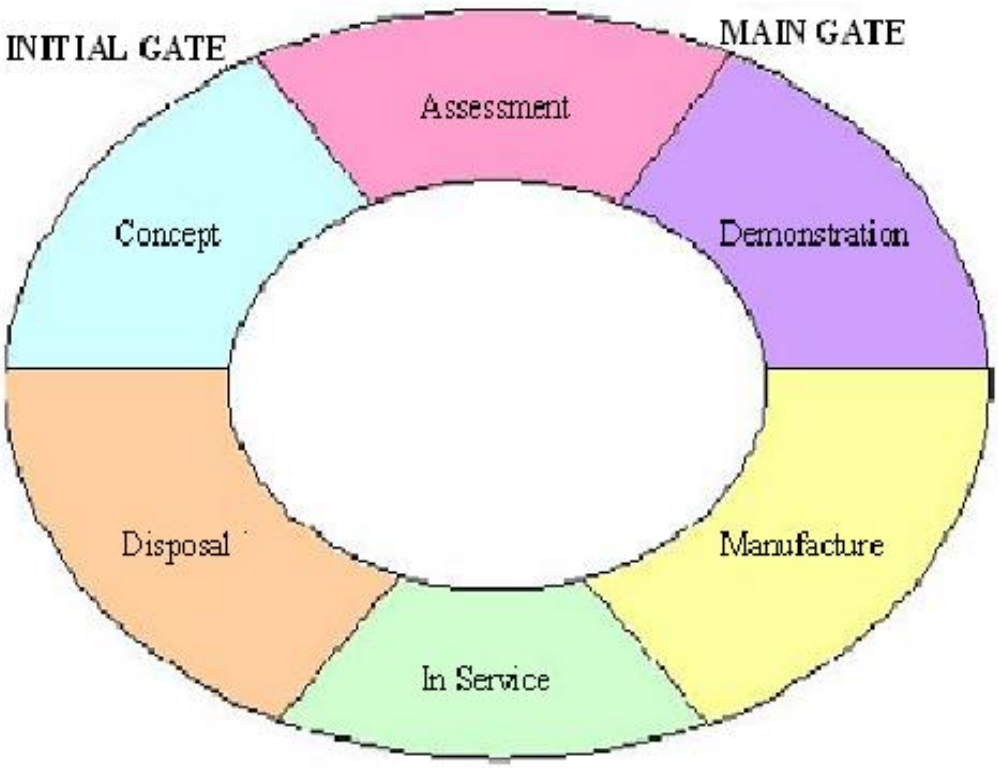

Figure 2.1:1: Stages of Design in Smart Acquisition

2.1.4 Systems Approach to Human Factors Operation

The application of human factors data to design processes does not (at least yet), lend itself to the formulation of a completely routine, objective set of procedures and solutions. However, systematic consideration towards the human factors aspects of a workplace system will at

least focus attention on features, which should be designed with human beings in mind. In this connection, it will be useful to list at least some reminders that are appropriate when approaching a design problem. These reminders are presented in the form of a series of questions (with occasional supplementary comments). Some points should be made about them. Not all of the questions are pertinent to the design of some workplace items, nor are they intended to be an all-inclusive list of questions. In addition the fulfilment of one objective may of necessity be at the cost of another. Nevertheless, these lists of questions should serve as a good start in the design process, by deleting and adding questions to fit the specific situation. Human factors considerations relating to the questions are provided under comments. It must also be appreciated that a human factors specialist will be required to answer some of the questions.

2.1.4.1 Organizational Demands

Organizational (both functional and managerial) demands, can be defined as the need to promote and enhance operator performance, for example by correctly allocating functions according to human capabilities and limitations, by selection and training and hence improvement of the skill levels of the operators. In contrast, the need to prevent work overload and performance degradation for example, by the organization of shift work, task significance, variety, distribution and realistic timescales of work schedules, will thereby enable operators to complete the various mental and physical demands of the workplace.

2.1.4.2 Mental Workload

Mental workload can be defined as the differences between the capacities of the information processing system that are required for task performance to satisfy performance expectations, and the capacity available at any given time.

Mental demands are often overlooked (or inadequately defined), during the workplace design process, because they are transparent/latent and not part of hardware and equipment design. Designers should know that operators require designed equipment which avoids or reduces operator mental overload, so that the means of processing information, solving problems, aiding the operator to make decisions, and allowing communication between people, both within and between workplace(s) can be carried out in a tolerable working environment.

2.1.4.3 Physical Demands

Physical demands can be defined as the material requirements that a person needs in order to carry out static, dynamic and motor processes when either acting on or reacting to a machine/equipment. For example, with respect to the motor processes, by the completion of either simple discrete tasks, or complex continuous tasks. Motor and visual processes should be readily apparent to equipment designers, because they physically and visually link (or couple) the operator to the machine interface.

2.1.4.4 Environmental Demands

Environmental demands can be identified with respect to their location as being either external or internal to the workplace. The external environment can, in broad terms, be classified as being from either an atmospheric or mechanical source. The designer requires to control the effects of these sources on the internal workplace environment, in order to promote the life support, health, safety and physical/mental well-being of the operators, by either reducing their internal effects, or protecting operators from these sources to within tolerable limits, so that the physical and mental demands of the workplace can be met.

2.1.5 Generic Human Factors Design Checklist

2.1.5.1 Functional requirements

	QUESTIONS		COMMENTS
1.	What are the functions that need to be carried out to fulfil the workplace system objectives	1.	Choose a coupling approach that maximizes total system effectiveness; do not choose on the basis of whether it is easy or hard to automate a function.
2.	If there are any reasonable options available, which of these should be performed by human beings? a. Is the existing equipment the result of tradition – or has it been planned from the start with the operator in mind? b. What role is the operator expected to play? c. How will the equipment fit the operator?	2.	Select the human sensor link which makes the best use of human capacity, sensitivity, and reliability. Avoid coupling via a particular link merely on the basis of tradition or because it may appear that a particular hardware implementation is less expensive, easier to design, or already available. <u>Fatigue</u>. Human capacity and functional capabilities are subject to short and long-term fatigue effects, whereas machines can be designed to be almost fatigue-resistant.
3.	Are the information inputs collectively within the optimum bounds of human information-receiving capacities, or will humans be called upon to undertake functions which they cannot do very well	3.	<u>Speed and Accuracy</u>. Human response cannot compete with the capacity of a machine in terms of speed and accuracy, thus, functional allocations to humans must be made on the basis of their capacity. Use hardware to aid the human, do not use the human to complement a predetermined hardware concept. Select coupling methods that do not require humans to make frequent, laborious, and lengthy calculations where accuracy is critical. (See also physical and mental demands.)
	a. Can any of these functions be transferred to the equipment (i.e. can reversionary modes of operation be employed to enable the workplace to function)?		a. Couple humans with machines in such a way that they are not compelled to work at peak limits all or most of the time.
4.	Is there provision for adequate redundancy in the workplace, especially of critical functions (i.e. can reversionary modes of operation be employed to enable the workplace to function)?	4.	Redundancy can be provided in the form of backup or parallel components (either persons or machines).

	QUESTIONS		COMMENTS
5.	In any evaluation or test of the workplace system (or components), does the workplace system performance meet the desired, managerial performance requirements?		

Table 2.1:1: Functional Requirements

2.1.5.2 Managerial Requirements

	QUESTIONS		COMMENTS
1.	Are the various tasks to be done grouped appropriately into jobs? a. To what extent should the job be broken down? b. How can knowledge or results be given and targets set? c. What should be the size of the working group and the physical spacing between members of the group?		
2.	Do the tasks which require time sharing avoid over-burdening any individual in the system?		Overload. Humans are fairly limited compared with machines in terms of how much information they can absorb and handle at one time, how many things they can monitor or control at one time and how effectively they can maintain cognizance of a situation for extended periods, and when under severe physiological and psychological stress conditions. Task overload will cause physical and/or mental fatigue, degrade operator performance, and generally reduce workplace system efficiency. Particular attention must be given to the possibility of overburdening in emergencies.
3.	Assessing human workload a. What is the main occupation of the operator? b. What is the secondary occupation?		To prevent work overload a. Sequence tasks rather than creating overlaps. b. Make individual tasks short. c. Minimize task precision requirements. (See also mental and physical demands)

	QUESTIONS		COMMENTS
4.	Is the work made harder by the way it is organised? a. Shift work (1) Are there day and night shifts? (2) Does the existing shift system permit only short periods on night shift? (3) How many free periods are there per duty cycle? (4) Are conditions favourable for daytime sleep? (5) Would flexible hours be advantageous or permissible within an operational context? (6) What is the maximum intended unbroken working spell? (7) What is the total intended work time in each 24 hr period? b. Pauses (breaks) and the preparation and eating of food (1) If physical work is involved, how long should be allowed for recovery? (2) How should these recovery periods be spaced? (3) Are the timing and lengths of these periods reasonable? (4) If there is a heat load or cold load on the operator, how long should the operator be allowed for recovery? (5) How long should light work continue before a pause is given and how long should this be? (6) Should there be more than one pause in a working period and what is the maximum intended unbroken working spell?		(See also Workplace environmental demands.)

	QUESTIONS		COMMENTS
	(7) Would additional short breaks be desirable and what is the total intended work time in each 24 hour period? (8) Should pauses be spaced by management (i.e. official breaks), or left to the will of the operator? (9) Is there adequate provision for food (snacks) and non-alcoholic drinks during breaks? (10) Should some change in activity be introduced during a pause? (11) Is the main break long enough? (12) Have facilities for the collection and disposal of human biological waste been provided?		
	c. <u>Tasking (Prevention of Boredom)</u> (1) How much time is allowed for each task? (2) Does the machine (equipment) speed during paced work bear the optimum relationship to the performance and variability of the operator(s) employed on the job? (3) Is the machine (equipment) being run for the optimum length of time? (4) Does repetitive work create a bad body posture? (5) Is the variability of the people it is proposed to employ on repetitive work within limits which can be accommodated by the process and can uniform performance be maintained which is normal for the process?		c. <u>To prevent boredom</u> (1) Provide task variety. (2) Distribute tasks equally. (3) Assign the operator only significant tasks and make it clearly evident that the operator rather than the machine is in control. Humans can become just as fatigued by boredom as by overwork.

	QUESTIONS		COMMENTS
	(6) Is it possible to make the work less monotonous by broadening the tasks or by the rotation of jobs? (7) Should the operator be kept on the same job all the time, or should jobs be undertaken in rotations? (8) Does the organization of the work allow for social contacts? (9) Does the work in its entirety provide reasonable opportunity for the individuals involved to experience some form and degree of self-fulfilment. (10) Does the work in its entirety contribute generally to the fulfilment of reasonable human values?		Couple the humans with machines in such a way that they can recognize or feel that their contribution is meaningful and important. Avoid giving humans machine-serving responsibilities. In the case of work with identifiable outputs of goods and services, this consideration would apply to those goods and services.
5.	Training a. Are the jobs of such a nature that the personnel to perform them can be trained to do them? b. If so, is the training period expected to be within reasonable time limits? c. Do the work aids and training complement each other? d. If training simulators are used, do they achieve a reasonable balance between transfer of training and costs?		b. Learning. Humans generally require some finite learning period to perform a new function. A machine begins its operation immediately and theoretically requires neither initial training nor proficiency refreshment.

Further information on methods and tools in support of the above may be found in Def Stan 00-25 Part 15.

Table 2.1:2 Functional Requirements

2.1.5.3 Information Requirements

	QUESTIONS		COMMENTS
1.	For a given function, what information external to the individual is required? a. What information does the operator need in order to do the task? b. In what form is the operator to receive the information? c. Can information be adequately received directly from the environment? d. What information should be presented through the use of displays? e. How can it best be displayed? f. Do the various information sources avoid excessive time sharing?		Couple humans with machines so that information flow and information processing are natural; this minimizes learning time and the probability of confusion and/or errors. Storage Capacity. Human capacity to store large amounts of information over the long term is extremely great, but their ability to retrieve information quickly is sometimes extremely limited and unreliable. A computer information processor however, can store almost any amount of data and recall it almost immediately. On the other hand, the machine's capacity to store and retrieve is entirely limited to what is designed into it. Overload. Human-Machine Performance Surveillance. Machines are also affected by environmental and operational distortions, especially computers.
2.	For information to be presented by displays, what sensory modality should be used? a. Should this be a visual auditory or tactile display? b. Which type of display will give information most quickly and with the minimum of ambiguity?		Consideration should be given to the relative advantages and disadvantages of the various sensory modalities for receiving the type of information in question. Select the human sensor link which makes the best use of capacity, sensitivity and reliability. Avoid coupling via a particular link merely on the basis of tradition or because it may appear that a particular hardware implementation is less expensive, easier to design, or be already available. Sensory Isolation. To perform useful tasks within a controlled environment, humans must be able to receive information at levels commensurate with their inherent sensory channel threshold capabilities; e.g. there are limits to visual activity and auditory perception and these senses are easily degraded by noise in the environment. In fact, sensory inputs may be distorted, causing humans to make perceptual errors, i.e. to misinterpret what they see, hear, or feel.

	QUESTIONS		COMMENTS
3.	Are the various visual displays arranged for optimum use? a. Which displays are essential for the efficient operation of the workplace, and which can be relegated to a minor position?		Displays should provide the information when and where it is needed. These considerations should take into account the general type of display, the stimulus dimension and codes to be used and the specific features of the display. The display should provide for adequate sensory discrimination of the minimum differences that are required.
4.	Can different parts, control knobs and tools be easily recognized by position and touch?		Logical positioning land tactile feedback aid in recognition of location.
5.	Are the decision making and adaptive abilities of human beings being appropriately utilized?	5.	Interpretation of, and response to, unexpected events. Humans possess the unique capability to constantly re-evaluate a situation, change their approach, and invent new ideas on the basis of unexpected events and operating conditions. They can often continue with either an alternative or less-than-perfect procedure, whereas a machine may stop operating completely. A machine does only what it is designed to do; i.e., its capability to anticipate all events and conditions of operation is limited.
6.	Are the decisions to be made at any given time within the reasonable capability limits of human beings?		
7.	In the case of automated systems or components, do individual operators have basic control, or do they feel that their behaviour is being controlled by the workplace system?		Couple humans with machines as though humans might at some time have to assume control (even though the nominal mode may be automatic).
8.	What form of communication will have to take place between operators?		
9.	Has this communication to be verbal and if so, will there be interference from noise? a. If interference from noise is expected, can information between operators be transmitted by means of instruments?		(See also workplace environmental demands.)
10.	If there is a communication network, will the communication flow avoid overburdening the individual involved?		(Consider also mental work.)
11.	Does the task require high auditory demands?		(Consider also vigilance demands.)

Further information on methods and tools in support of the above may be found in Def Stan 00-25 Part 15.

Table 2.1:3: Information Requirements

2.1.5.4 Physical Demands

	QUESTIONS		COMMENTS
1.	Will the physical demands of the task be such as to overload the operator? a. If yes, what steps can be taken to reduce this?		Overload. Task overload will cause physical fatigue, degrade operator performance, and generally reduce workplace system efficiency.
2.	What physical work will the operator be required to do? a. Is the work physically arduous? b. Will it be within the operator's physical capacity? c. Will some form of mechanical assistance be required?		Physical Strength. Humans are extremely limited compared with machines in terms of how much force they can apply, and for how long.
3.	Questions relating to physical strain a. Bodily posture: (Sitting, standing, stooping) (1) Can the operator sit or must he stand? In either case will his posture be satisfactory? (2) Does the required posture involve much static muscular effort? (3) Is a favourable work posture promoted by the location of instruments, work pieces and controls? (4) Is the working height correct? (5) Is the range of movement of grips and handles anatomically correct? (6) Is there enough room for the operator to move about?		Design implications relative to minimizing potential muscle fatigue a. Avoid design features that: (1) Require operators to apply near maximum force capacities over many cycles and for long periods of time. (2) Require continuous, rapid, repetitive muscle contractions for long periods, e.g. pounding, tapping, cranking, or push-pull cycling. (3) Force operators to hold some device in a fixed position for long periods without rest periods. (4) Require operators to maintain an upright posture for long periods without adequate body support (as in the case of a seat). (5) Require operators to make very long reaches, frequently, and for extended periods of time. (6) Require operators to stand or sit in awkward positions, and to hold their arms above their heads for long periods.

	QUESTIONS		COMMENTS
	(7) Can the work be seen clearly and any displays be read with the body in a natural position?		(7) Require operators to work in a bent-over or squatting position, or in a position on their stomachs or backs, with the accompanying stress of holding the head and arms in a strained position.
	(8) Does the body have to take up an unnatural posture when pedals are operated?		(8) Require operators to bend over and straighten up frequently, and over long periods.
	(9) If the operator is standing, can foot control be dispensed with?		
	(10) What force will the operator be called upon to exert and will some form of servo assistance be required?		
	(11) Is the height of the work surface adapted to the posture, and correct in regard to viewing distance?		
	(12) Is the work surface correct with regard to: (a) Height? (b) Width? (c) Colour tones and contrast?		
	(13) Are chairs and supports available to obviate necessary standing?		
	(14) Is a support for elbows, forearms, and back necessary.		
	b. <u>Sedentary work</u>:		b. Avoid workplace layouts that:
	(1) Is sitting promoted by the location of instruments, work pieces and controls?		(1) Require repeated iterations over long periods.

	QUESTIONS		COMMENTS
	(2) Is the seat correctly adjusted to the working height?		(2) Require operators to sit askew (in a twisted position) in order to watch a display and simultaneously operate some control (especially a foot control).
	(3) Does the seat cause discomfort?		(3) Require operators to hold a foot above a foot control (between pedal depressions) for long periods.
	(4) Is a foot rest necessary?		(4) Require operators to continuously move their heads from side to side or up and down.
	(5) Are the controls set out so that bodily postures are natural?		(5) Require operators to step up and down frequently for long periods.
	(6) Is much effort needed to operate manual controls?		
	(7) Are the controls adequate for their purpose?		
	c. <u>Muscular Works</u>		c. Avoid tool designs:
	(1) Is the muscular effort predominantly static or dynamic?		(1) That require operators to hold and push a tool against a work surface or component in order to maintain contact pressure.
	(2) Is any form of strenuous static work involved?		(2) That require operators to hold a very heavy tool in a precise position for long periods.
	(3) If so, can this be avoided by providing clamps or supports for the work?		(3) That require operators to maintain a very tight grip in order to keep the tool in place (especially if the grip must be maintained for long periods).
	(4) Can the work be made easier by supporting hands and/or elbows?		
	(5) Must loads be lifted?		
	(6) Are the weights of these loads acceptable?		
	(7) Is there some more suitable method of lifting and transporting these loads?		
	(8) Is strenuous dynamic work required?		

	QUESTIONS		COMMENTS
	(9) Is the average heart rate below the limits? (10) Is the work performed with a high enough degree of efficiency?		

Further information on methods and tools in support of the above may be found in Def Stan 00-25 Part 15.

Table 2.1:4 Physical Demands

2.1.5.5 Material Requirements - Physical control and control devices

	QUESTIONS		COMMENTS
1.	When physical control is to be exercised by the operator: a. What controls will be needed? b. What type of control device should be used? c. Which controls are essential for the efficient operation of the equipment? d. Which controls can be relegated to a secondary position?		Select coupling methods that do not require: a. Extremely precise manipulations. b. Continuous, repetitive movements. c. Physical contributions that demand reaching a human's upper strength limits.
2.	Is each control device easily identifiable?		
3.	Are the controls correctly designed in terms of shape, size, surface and material with regard to the required forces?		
4.	Are the operating requirements of any given control (as well as of the controls generally), within reasonable bounds?		The requirements for force, speed, precision, etc, should be within the limits of virtually all persons who are to use the system. The man-machine dynamics should capitalise on human abilities so that, in operation, the devices meet the specified system requirements.
5.	Is the operation of each control device compatible: a. With any corresponding display? b. With common human stereotype response tendencies? c. With the location of instruments and work pieces?		

	QUESTIONS		COMMENTS
6.	Are the control devices arranged conveniently and for reasonably optimum use? a. Is correct control by hand or feet promoted by the location of instruments, work pieces and controls?		

Table 2.1:5: Physical control and control devices

2.1.5.6 Workspace and User Population

1.	Is the workspace satisfactory for the range of operators who will use the facility? a. Is the equipment likely to be operated partly or exclusively by females? If so, what population of females must be provided for?		Select the appropriate target population.
2.	Are the various components and other features of the facility arranged in a satisfactory manner for ease of use and safety?		(See also workplace environmental demands.)
3.	When relevant, is the visibility from the workstation satisfactory?		
4.	Are the controls and displays located in front of the operator within optimal reach, visual area and arranged for optimum use?		Blanking arcs and blind spots should be checked using a field of vision test. Ensure controls are within the 5th percentile minimum reach envelopes, important displays are within primary visual field, and their layout is logically arranged.
5.	Are warning lights/panels placed in the central part of the visual field?		

Table 2.1:6: Workspace and User Population

2.1.5.7 Maintenance Requirements

	QUESTIONS		COMMENTS
1.	What are the expected maintenance requirements?		
2.	Is the workplace system or item adequately designed for convenient maintenance and repair, including individual components? a. Is there adequate clearance for reaching individual parts that need to be maintained, repaired or replaced? Note: Does the machine construction allow for this in terms of:		
	(1) Accessibility?		
	(2) Avoiding accidents?		
	(3) Lighting requirements?		
	(4) Tracing technical faults?		
	b. Are proper tools and diagnostic aids available?		
3.	Has the equipment been:		
	a. Designed to make the diagnosis of faults easy?		
	b. Planned so that probable repairs can be carried out with the minimum of delay?		
	c. Supplied with adequate instructions for maintenance and repair?		

Further information on methods and tools in support of the above may be found in Def Stan 00-25 Part 15.

Table 2.1:7: Material Requirements

2.1.5.8 Workplace Environmental Demands

	QUESTIONS		COMMENTS
1.	1. Are the environmental conditions such that they: a. Permit satisfactory levels of human performance? b. Provide for the well-being of individuals?		Environmental Constraints. The human's physiological tolerance to certain operating environments is limited. Therefore, an early decision is required regarding costs and complexity necessary to protect and support the human under severe environmental demands (i.e. extreme atmospheric pressure, acceleration, temperature, noise, vibration, radiation, and/or potential emergency situations produced by explosive blasts, fire, atmospheric or chemical contamination, etc).
2.	What are the ambient atmospheric conditions likely to be? (a) Will the air contain contaminants and toxic substances such as nuclear, biological and chemical agents?		The environmental life support system shall be part of workplace design.
	(b) Will there be a non-standard air mixture (i.e. oxygen deficiency, carbon dioxide and/or carbon monoxide excesses)?		
	(c) Will air circulation and ventilation be provided? (d) Will there be altitude and sudden barometric pressure changes to affect the operator (i.e. altitude sickness, breathing and hearing difficulties)? (e) Will there be heat and/or humidity conditions which will require refrigeration for cooling and dehumidification, to reduce the water vapour content? (f) Will there be cold conditions which require heating? (g) What lighting (illumination) is likely to be required for working in daylight and artificial light? Will there be radiation and ionization hazards, or any other harmful waves/rays in the electromagnetic spectrum, which requires protection for the operators.		

	QUESTIONS		COMMENTS
3.	Health Safeguards a. Does the air in the room contain any toxic substances? b. Can the spread of toxic substances be stopped at source? c. Can ventilation equipment be installed? d. Is there contact with any substance that may cause skin irritations such as dermatitis?		
4.	Questions Relating to the Working Environment		
	a. Light and Colour (1) Is the lighting bright enough during daytime? (2) Is the artificial lighting bright enough? (3) Are excessive contrasts present in the workstation? (4) Must the operator keep looking from a bright to a dark area, and vice versa? (5) Are there reflective surfaces in the workstation? (6) Are the light sources properly arranged? (7) Is the lighting steady (i.e. no flickering fluorescent tubes; tubes out of phase with each other; no stroboscopic effects from moving machinery)? (8) Is there excessive brightness contrast between different colours? (9) Are attention getters sensibly used? (10) Does the colour scheme in the workplace avoid visual strain? (11) Will the task require high visual demands?		(Consider also perception demands)

	QUESTIONS		COMMENTS
	(12) Does the workspace require a high illumination level? (13) Is general artificial illumination necessary? (14) Will the workspace layout be exposed to different illumination levels? (15) Is there any glare from the workspace or surroundings? b. <u>Indoor climate</u> (1) Is the air temperature comfortable? (2) Are the surrounding surfaces at approximately the same temperature as the air? (3) Are there any perceptible draughts? (4) Is the relative humidity physiologically suitable? (5) Are the heating appliances placed correctly? (6) Is the air changed as frequently as required? c. <u>Questions Relating to Work Under Hot Conditions</u> (1) Is the heat load acceptable? (2) Are the operators suitably clothed? (3) Is the supply of liquids sufficient? (4) Can the heat load be reduced by protective devices?		

	QUESTIONS		COMMENTS
5.	What are the ambient and range of mechanical conditions likely to be? a. Will there be high impulsive and/or continuous noise levels above safe levels from which operators will require protection? (See also Question 3 below.)		
	b. Will there be vibration of mechanical origin, shock loading, and ride motion due to movement across uneven terrain; waive, swell and wind effects from water; wind-shear, clear and storm air turbulence from which operators will require protection?		
	c. Will there be high acceleration, G-forces and weightlessness experienced by operators from which they require protection? d. Are any parts of the body exposed to undue constant or intermittent mechanical pressure? e. Does the machine/equipment cause significant vibration and if so, how will this affect the operator's performance?		
6.	Do external factors listed in Question 1 above make the work harder such that operator performance is degraded?		
	a. <u>Protection against noise</u> (1) Does the noise disturb vigilance or mental effort? (2) Does the noise interfere with conversation? (3) Is the nose level so high that there is a danger of damage to hearing? (4) Can the noise level be reduced? (5) Is there a danger of hearing damage because of the intensity or long-term presence of noise?		(Consider also mental workload.)

	QUESTIONS		COMMENTS
	b. Health safeguards (1) Does the layout of the workplace make accidents possible? (2) Does the performance of the work involve risk of accidents? (3) An accident is unpredictable hence perhaps it is better to talk about making the workspace safer than whether accidents may occur. (4) Is there any risk of burns or explosion?		It is suggested that the designer prepares a list of potential injury modes (cuts, bruises, fractures, amputations, burns, internal ruptures, eye penetration, asphyxiation, etc). This should be used as a checklist to evaluate the proposed human-machine allocation decisions.

Table 2.1:8 Workplace Environmental Demands

2.2 References

2.3 Referenced Documents

[1] Kroemer, K. H. E., and Grandjean, E. (1997). Fitting the Task to the Human (5th Ed). Taylor Francis

[2] Nielsen, J. (1993). Usability Engineering. Morgan Kaufmann

[3] Pheasant, S. (1991) Ergonomics, Work and Health. The Macmillan Press

2.4 Other Useful References

[4] BS EN ISO 13407:1999. Human-centred design processes for interactive systems

[5] BS EN 614-2:2000. Safety of machinery. Ergonomic design principles. Interaction between the design of machinery and work tasks

[6] BS EN 894-1:1997. Safety of machinery. Ergonomics requirements for the design of displays and control actuators

[7] BS EN 292-1:1991. Safety of machinery. Basic concepts, general principles for design. Basic terminology, methodology

[8] BS EN 292-2:1991. Safety of machinery. Basic concepts, general principles for design. Technical principles and specifications

[9] BS ISO 15288:2002. Systems engineering – system life cycle processes

[10] BS ISO/IEC 15504-1:1998. Information technology. Software process assessment. Concepts and introductory guide

[11] ISO 10075-1:2000. Ergonomic principles related to mental workload: General terms and definitions

[12] ISO 11428:1996. Ergonomics – visual danger signals – general requirements, design and testing

[13] ISO/TS 16071:2003. Ergonomics of human-system interaction – guidance of accessibility for human-computer interface

[14] ISO/TR 16982:2002. Ergonomics of human-system interaction – usability methods supporting human-centred design

[15] ISO/TR 18529:2000. Ergonomics – Ergonomics of human-system interaction – human-centred lifecycle process descriptions

[16] BS 7000-2:1997. Design management systems. Guide to managing the design of manufactured products

[17] ASTM F1337-91: 2001. Standard practice for Human Engineering program requirements for ships and marine systems, equipment and facilities

[18] ASTM F1166-95a: 2000. Standard practice for Human Engineering design for marine systems, equipment and facilities

[19] STANAG 3705 AI. Human Engineering design criteria for aircrew station controls and displays

[20] STANAG 3994 AI. Application of Human Engineering to Advanced Aircrew Systems

[21] ANEP 26 (NATO MAS), Edition 1. Ergonomic data for shipboard space design in NATO surface ships

[22] ANEP 27 (NATO MAS), Edition 1. Human Factors guidelines for the design of MMIs in Operational Rooms

[23] STGP 10, STG 2002 ISSUE 3. HFI Management Guide

[24] STGP 11, STG 2002 ISSUE 3. HFI Technical Guide

[25] Def Stan 00-25 Part 14: 2000. Human Factors for Designers of Equipment: Military Land Vehicle Design

[26] Mil-Std-1472F: 1999. US DoD Design Criteria Standard – Human Engineering

[27] Mil-Hdbk-759C: 1995. US DoD Handbook for Human Engineering design guidelines

[28] NASA-STD-3000: 1995. Man-Systems Integration Standards Volumes 1 and 2

[29] IEEE Guide for the application of human factors engineering to systems, equipment and facilities of nuclear power generating stations

3 General Ergonomics [HFE2]

This technical area is concerned with 'General Ergonomics' and the interaction between users, maintainers and their equipment with a view to matching systems, jobs, products and the operating environment.

There is considerable overlap of this Section with all domain areas and Part 15 related to process issues.

This Section was created as an overview of the topic area in August 2003 and is an interim version.

3.1 Technical Guidance

Ergonomics is a multi-disciplinary scientific approach to the study of work where humans interact with equipment and systems.

The goal is to match the design to the user needs to create an effective working system. An effective match optimises:

a. working efficiency;

b. health and safety;

c. comfort and ease of use.

This area covers general ergonomics within the context of visual displays and work station layout, control room layout, interactive systems and communication issues, control centres and rooms, mental workload and so on. Also, this area covers design guidelines and principles, safety issues, HFI, evaluation and testing for Land, Sea, Air and Nuclear systems.

An ergonomic approach to improving the physical environment increases task performance in terms of increased output, increased error rates and reduced costs.

Ergonomic design incorporates the principle of *user-centred design* whereby the design of products is based on the characteristics of its users. Ergonomics provides a structured approach to user-centred design in terms of methods and research techniques and accommodates human adaptability and diversity. The approach to design is empirical and the design process is iterative and evolutionary and should be based on some form of Task Analysis.

3.2 References

[30] Kroemer, K. H. E. and Grandjean, E. (1997). Fitting the Task to the Human (5th Ed). Taylor Francis

[31] Nielsen, J. (1993). Usability Engineering. Morgan Kaufmann

[32] Pheasant, S. (1991) Ergonomics, Work and Health. The Macmillan Press

[33] Salvendy, G. (1997). Handbook of Human Factors and Ergonomics (2nd Ed). Wiley Inc.

[34] BS EN ISO 13407:1999. Human-centred design processes for interactive systems

[35] BS EN 614-2:2000. Safety of machinery. Ergonomic design principles. Interaction between the design of machinery and work tasks

[36] BS EN 894-1:1997. Safety of machinery. Ergonomics requirements for the design of displays and control actuators

[37] BS EN 292-1:1991. Safety of machinery. Basic concepts, general principles for design. Basic terminology, methodology

[38] BS EN 292-2:1991. Safety of machinery. Basic concepts, general principles for design. Technical principles and specifications

[39] BS ISO 15288:2002. Systems engineering – system life cycle processes

[40] BS ISO/IEC 15504-1:1998. Information technology. Software process assessment. Concepts and introductory guide

[41] ISO 10075-1:2000. Ergonomic principles related to mental workload: General terms and definitions

[42] ISO 11428:1996. Ergonomics – visual danger signals – general requirements, design and testing

[43] ISO/TS 16071:2003. Ergonomics of human-system interaction – guidance of accessibility for human-computer interface

[44] ISO/TR 16982:2002. Ergonomics of human-system interaction – usability methods supporting human-centred design

[45] ISO/TR 18529:2000. Ergonomics – Ergonomics of human-system interaction – human-centred lifecycle process descriptions

[46] BS 7000-2:1997. Design management systems. Guide to managing the design of manufactured products

[47] ASTM F1337-91: 2001. Standard practice for Human Engineering program requirements for ships and marine systems, equipment and facilities

[48] ASTM F1166-95a: 2000. Standard practice for Human Engineering design for marine systems, equipment and facilities

[49] STANAG 3705 AI. Human Engineering design criteria for aircrew station controls and displays

[50] STANAG 3994 AI. Application of Human Engineering to Advanced Aircrew Systems

[51] ANEP 26 (NATO MAS), Edition 1. Ergonomic data for shipboard space design in NATO surface ships

[52] ANEP 27 (NATO MAS), Edition 1. Human Factors guidelines for the design of MMIs in Operational Rooms

[53]

[54] STGP 10, STG 2002 ISSUE 3. HFI Management Guide

[55] STGP 11, STG 2002 ISSUE 3. HFI Technical Guide

[56] Def Stan 00-25 Part 14: 2000. Human Factors for Designers of Equipment: Military Land Vehicle Design

[57] Mil-Std-1472F: 1999. US DoD Design Criteria Standard – Human Engineering

[58] Mil-Hdbk-759C: 1995. US DoD Handbook for Human Engineering design guidelines

[59] NASA-STD-3000: 1995. Man-Systems Integration Standards Volumes 1 and 2

[60] IEEE Guide for the application of human factors engineering to systems, equipment and facilities of nuclear power generating stations

4 Workspace Design [HFE3]

This technical area is concerned with the environments in which people perform tasks and rest. Tasks can range from people using a simple desk, to a more complex control room for Land, Air and Sea systems. The aim is to design a comfortable, stress and hazard free environment, which is compatible with performing tasks over time.

Therefore, this area is concerned with visual displays, HMI, the design and layout of control rooms, human postural issues, seating, accommodation, workshops and maintenance areas for Land, Air and Sea domains. The design of workspaces should be concerned with the maintenance of optimal levels of arousal and performance whilst minimising stress.

Consideration of the operational and environmental context in which people live and work, human anthropometrics, biomechanics and physiology in relation to human physical limitations is essential when designing the physical workspace.

There is considerable overlap with other technical areas, especially within the human factors engineering and personnel domains. Specifically, this Section overlaps with the following:

a. Physical Characteristics [P3]
b. Clothing Increments [P4]
c. Personal Equipment Envelope [P5]
d. Human Computer Interface/Interaction [HFE5]
e. Information Displays [HFE8]

This Section was created in August 1991 and edited in August 2003.

4.1 Introduction

A knowledge of body sizes and shape is required to ensure that the workspace is suitable for the operator. A workplace may be defined, for the purposes of this Standard, as any environment within which an operator is required to carry out tasks.

To configure the individual operator's workspace, the designer will have to arrange all of the equipment according to the principles of display and control layout and the ease in which it can be maintained (see Parts HFE 5, 6, 8 and 9 of this Defence Standard).

In providing satisfactory space for the operator to carry out his tasks, the designer will need to take account of the basic human data considerations of body size, strength and stamina (see Parts P3-5 of this Defence Standard).

To configure the operator's workplace, the designer will need to consider both its physical surrounding and its internal and external environment, to ensure that the workplace neither endangers nor neglects the health, safety or efficiency of the operator.

Achieving a satisfactory workplace free of stressors and hazards will require the equipment designer to comply with the basic human data contained in Parts P7 and HHA1-8 of this Defence Standard.

The human body is vulnerable to physical stresses and injury due to poor accommodation/workspace design. From this, accommodation/workspace design is

approached by examining the ways people move around the physical area, handle materials and items etc to perform tasks.

Where the intention is to reduce injury, complaints and absenteeism, bio-mechanic principles provide a means to understand the physical stresses placed on a given population of workers in the accommodation/workspace and examine exertions placed on body parts during task performance. For example, work requiring standing on a hard floor for long periods of time can cause lower extremity and back pain. Maintaining a bent/flexed neck to read a poorly designed information display can cause neck pain and upper back muscle spasm.

4.2 Scope

This Section of the Standard provides general guidance for the development of workplaces. The workplace is considered as the complete working environment in which all operators and equipments are arranged to function as a unit. The unit could be a land, sea or air system, either static or mobile. In terms of the human operator, the important concepts of structural and dynamic anthropometry are discussed, outlining the physical limitations of people within the workplace and workspace envelope. Also included are general considerations associated with working positions and postures within the operational environment. Much of the available data is specific to certain types of workplace, and could be quite different from those pertaining to vehicle or static consoles. (It is strongly recommended that, in layouts of any degree of complexity, a human factors specialist suitably qualified in military ergonomics should be consulted).

4.3 Technical Guidance

4.3.1 Workspace and Workplace Design Principles

Anthropometric data is used to determine the dimensions of the workspace envelope needed by personnel to perform their tasks, and can be expressed in one of two forms. Static (or structural) dimensions are taken with the subject in a rigid standardized position. Dynamic (or functional) dimensions are measured in working positions and take account of certain degrees of body movement and flexibility.

The workspace envelope must be compatible with the anthropometric dimensions of the target population of operators using the equipment. Dimensions of the larger operators are used for determining clearances and near (i.e. minimum) limits of reach, especially when the seated operator has either a seat backrest or other obstruction interfering with the rearward movement of the elbows. Reach dimensions of the small operator should be used to determine the far (i.e. maximum) limits of reach, particularly when the worker is either standing behind a bench or seated and harnessed to a non-adjustable seat. The seat reference point (SRP) illustrated in Figure 4.3:1 is commonly used as a standard starting point for reach dimensions of seated operators. It is defined as the midpoint of the intersection of the plane of the seat surface, with the plane of the backrest surface of the seat and tangents of the mid-line contours of the seated man. Equipment positioning should therefore be based on the reach limits dictated by both large and small operators. In addition, the effects of clothing which add to the clearance requirements and which can also restrict movement must be considered. Static human body dimensions are traditionally measured with the nude subject either standing or sitting erect and will not represent the dynamic characteristics of normal stooping, slumping, bending, stretching or moving about. It is recommended that all types of layout should be verified in either a three-dimensional, full-size mock-up or computer model, where subjects or man-models representing the extremes of the expected user population can actually be tried in the layout.

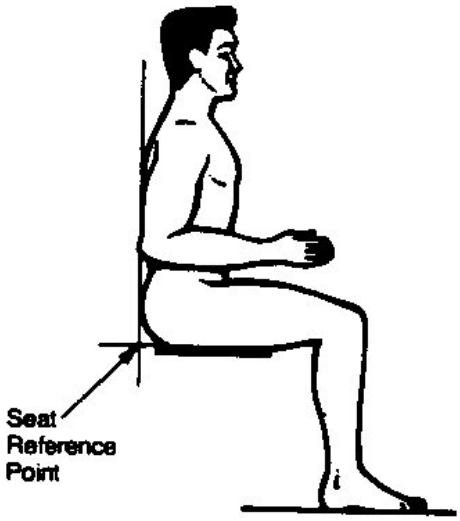

Figure 4.3:1: Seat Reference Point

4.3.1.1 Critical Dimensions

Although static dimensions are useful for many design purposes, they do not take into full account the flexibility and movement of joints. Dynamic anthropometry provides a better representation of the workspace envelope since in most workstations an element of movement occurs. The implications of this can be seen, for example, in the design of a driver's workplace (Figure 4.3:2) where it is undesirable to fix the operator into a rigid posture, due to the possible bending of the back and hand manipulations.

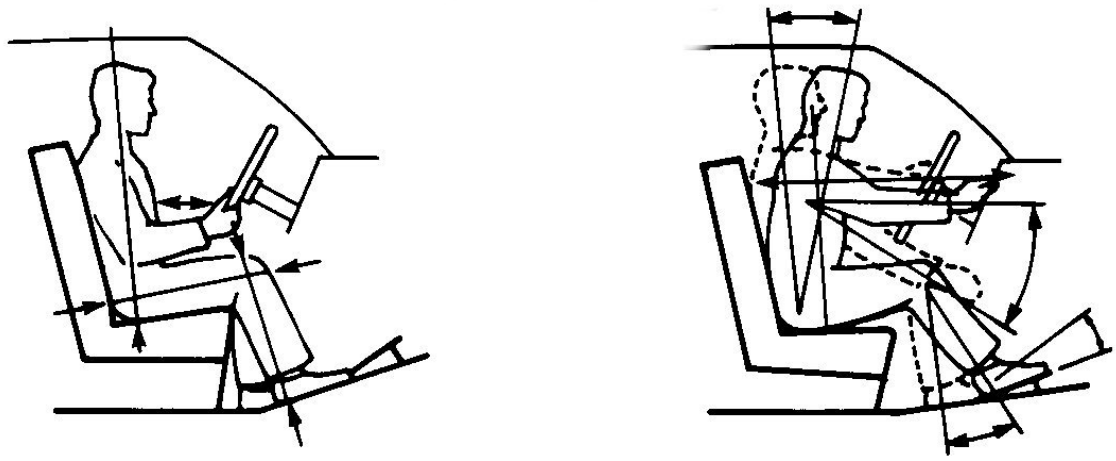

Figure 4.3:2: Fit Based on Static Dimensions (Left), Dynamic Dimensions (Right)

When performing physical functions dynamically, the individual body members normally do not operate independently but together. The practical limit of arm reach, for example is not the sole consequence of arm length, as it is also affected in part by shoulder movement, partial trunk rotation, possible bending of the back, and the function that is to be performed by the hand. These and other variables make it difficult, or at least very risky, to try to resolve all space and dimension problems on the basis of structural or static body dimensions. The importance of carrying out some kind of simulation or fitting trials cannot be over-emphasised.

Many types of work activity are carried out on horizontal workbenches, desks and workstations. For such work surfaces, normal and maximum areas are defined, as shown in Figure 4.3:3. The inner work surface contour takes into account the dynamic interaction of the movement of the forearm and the elbow. For a full description of this issue, refer to Sanders, M and McCormick, E, 1993.

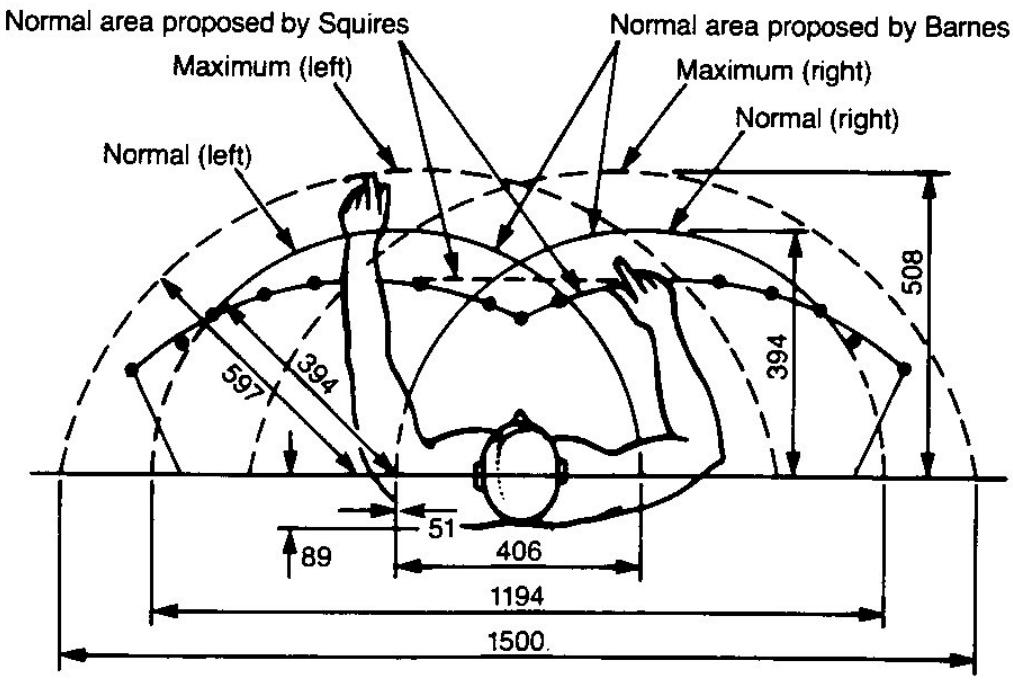

Figure 4.3:3: Effective Reach Parameters

Normal Area. Defined as the area which can be conveniently reached with a sweep of the forearm, the upper arm hinging in a natural position at the side of the body.

Maximum Area. Defined as the area that could be reached by extending the arm from the shoulder.

Representative workplace layout should accommodate a range from at least the 5th to 95th percentile of the user population. However, some military specifications may be more stringent and require a range from the 3rd to 97th percentile. Specific applications where there is a well-defined population (i.e. female electronics assembly personnel) may enable an even wider range to be considered (e.g. 1st to 99th percentile). In each case, the appropriate anthropometric data should be consulted (see Part P3 (Body Size) of this Defence Standard).

4.3.1.2 Functional Factors

Two functional considerations in good workplace layout are visibility and clearance both of which are related to an operator's anthropometric and biomechanical characteristics. Procedural efficiency, a third factor, is related to perception and reaction. A fourth factor is access to displays, control and work surfaces and storage areas, which can also be related to anthropometric dimensions.

4.3.1.3 Field of View

The designer must consider primary and secondary line of sight factors. 'Out of the window observation' might define a primary visual task, whereas a secondary task would be to monitor instruments or display states inside the workplace (such as a cockpit). In contrast to this, a static console may have the control/display area of the console as the primary visual task, with the wider view of other personnel as the secondary visual task.

4.3.1.4 Clearance

Clearance at various levels is important for:

a. Access to and from the workplace;
b. Ease in grasping and operating controls;
c. Ease in adjusting the body properly to the visual control task;
d. The avoidance of physical discomfort or injury.

All of these factors may be greatly influenced by restraints which the operator may need to wear and by the special clothing worn to insure safety and/or to provide life support. In establishing clearance requirements whether related to access, control manipulation, body position or injury avoidance, the designer must recognise the specific needs of the user and take these into account.

4.3.1.5 Design Anthropometrics

In order to accommodate as much of the population range as possible, seating should be appropriately adjustable. The seated eye heights of both the largest and smallest percentiles are important reference points for the designer.

Restraint by a seat belt or shoulder harness and restrictions such as a fixed viewing distance can make arm reach a critical factor, but even limited body motion causes these dimensions to be less critical. Other layout requirements can then assume a higher priority.

Allowances should always be made when using anthropometric data for such factors as, seated slumped posture (40 mm), effects of bulky clothing, body movement caused by vehicle oscillations, sudden deceleration, altitude changes or weightlessness, and for dimensional alterations introduced by stooping, squatting, twisting, turning, or doubling up (refer to Part P3: Body Size).

4.3.1.6 Priority of Design Considerations

Priorities should be assessed for each individual case by human factors specialists. Equal priorities can exist and often the final solution is a compromise of several priorities. This must be conducted in a rational manner with the human factors specialists, the user, and the designer. The principles of control and display layout (i.e. functional grouping, sequence of operation, importance and frequency of use) are identified and referred to in Part 15 of this Defence Standard and control coding information is detailed in Section HFE6.

4.3.1.7 General Layout

Precise workplace dimensions are strongly dependent on the activities being carried out. It is therefore only possible to provide general guidelines within this document and these are based primarily on a static workplace. For specific applications such as a vehicle or an aircraft cockpit, additional constraints apply. It is not possible, within the scope of this Defence Standard, to cover all of the likely situations and the designer is recommended to consult more specialized sources of data such as the Army Personnel Research Establishment (APRE) for land systems, Admiralty Research Establishment (ARE) and the Institute of Naval Medicine (INM) for sea systems and the Institute of Aeronautical Medicine (IAM) and the Royal Aircraft Establishment (RAE) for air systems. These organisations may well recommend specialist contacts in Industry.

By following the general design approach and basic information requirements described below, designers can develop workplace layouts for specific applications.

4.3.1.8 Visual Requirements

a. View outside the compartment or vehicle.
b. View within the workplace (panel mounted displays and controls etc).
c. Sight-lines to other personnel.
d. Sight-lines to other equipment (displays, status boards and maps, for example).

For specific guidance, the designer is directed to Section HFE8 of this Defence Standard.

4.3.1.9 Auditory

a. Direct personal communication with other operators.
b. Signals from loudspeakers, earphones.
c. Warning bells, sirens, alarms etc
d. Equipment operation e.g. auditory and sound unique to individual systems such as keyboard feedback

For specific guidance, the designer is directed to Section HFE8 of this Defence Standard.

4.3.1.10 Demands for Control Activity

a. Hand and foot controls.
b. Latches, handles, push buttons, toggle switches, rotary selector switches, knobs, cranks, handwheels, levers, pedals, touch displays and keyboards.
c. Restraint harness, fasteners, restricted mobility.
d. Seat adjustments, optical adjustments, canopy/cover opening etc.
e. Emergency items e.g. flashlight, survival gear.

4.3.1.11 Handedness

a. Degrees of handedness vary from dominant right-handed through ambidextrous to strong left-handed. Left handedness (i.e. hand preference) is generally less than 10% of any large national population. A sample of British Army population found that 8.8% were left handers. Individuals with truly equal preference for handedness are extremely rare. Controls, particularly tools, are more often designed for right-hand operation. Left handed operators often find them difficult or uncomfortable to use, which may lead to fatigue and risk of accidents. A solution is not simple. Sometimes right and left-handed tools are designed but are uneconomical or difficult to produce.

b. Handedness may simply be classified for individuals on the basis of the writing hand. However for complex tasks this division is insufficient, because the individual can have different hand preferences for various actions which could cause difficulties when determining which hand should operate which control. For example, tightening a screw (i.e. with right hand thread) is easier for a right handed operator because greater torque and range of hand movement is possible. However, all people make clockwise movements better with the right hand, and counter clockwise movements better with the left hand. Therefore it is crucial to assess the job requirements and match them to the operator's capabilities including strength.

c. Handedness may be classified as the difference in the ability to complete manipulative tasks with the preferred hand. Differences in dexterity may be due to the relative feedback control of movements. However, once sequential movements are automatic (or ballistic), either hand can perform with equal skills and operator performance becomes a direct function of practice [See Part 25, Reference [62] for further information]. Also the skill involved in hand-eye coordination is also mainly subject to feedback control. For specific guidance, the designer is directed to Section HFE6 of this Defence Standard.

4.3.1.12 Body Clearance

a. Possibility of an operator bumping elbows, knees, head etc during both normal and emergency exit, crash ejection, or rescue.
b. Possibility of inadvertent snagging or accidental operation of controls or handles.
c. Relationship between operator's workplace and adjacent workstations.

For specific guidance, the designer is directed to Section P3-5 of this Defence Standard.

4.3.1.13 Working Environment

The control of vibration, noise, light, thermal radiation, pressure etc, should be accomplished at the source, or if this is not possible, at the workplace. For example, proper orientation of a display panel can reduce the effects of glare from an ambient light source. Structural support for a hand or arm can reduce vibration effects and improve the precision of manual control. Independent seat suspension, seat padding and contoured seating can reduce postural stress from road shock, as well as fatigue from long duty periods in confined quarters. The application of cognitive ergonomics such as colour coding displays will help to optimise performance if used correctly in a crowded workplace. The designer should strive to eliminate or minimize any debilitating effects of the environment on operator performance. See Figure 4.3:4 and Section P7 and HHA1-8 of this Defence Standard.

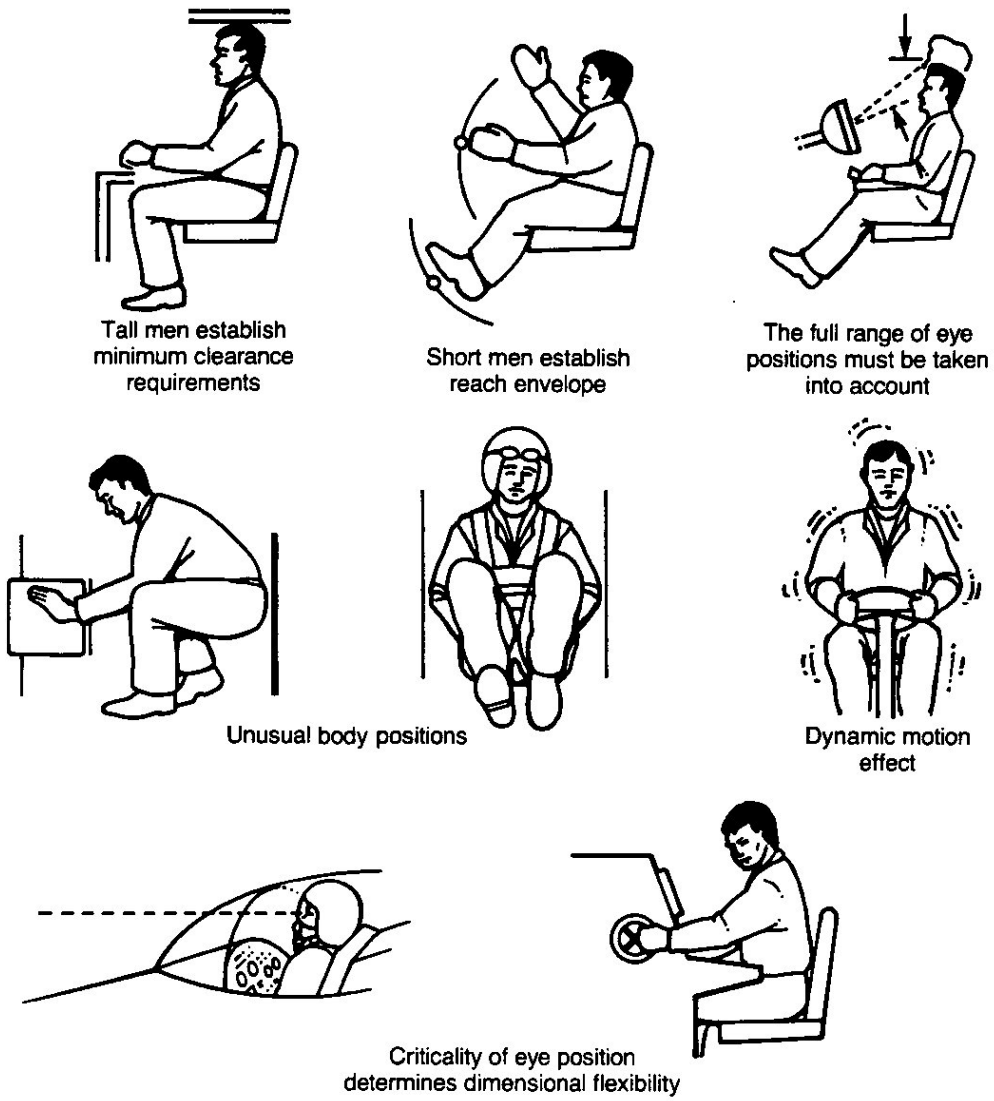

Figure 4.3:4: Some Examples of Environment Influences on Body Dimensions

4.3.1.14 Physiological Factors

Workplace design and layout should avoid imposing any physiological stresses on the operator. Designers should recognize gross personal hazards by providing crash protection for example, and also be responsive to more subtle physiological stresses arising from simple design incongruities, e.g.:

a. Lack of postural control or support;
b. Improper or inadequate distribution of body weight;
c. Cardiovascular restriction;
d. Fatigue-inducing activity or awkward reaching;
e. Habitability;
f. Noise and vibration effects;
g. Visual strain due to inappropriate location of displays.

The environmental stressors and hazards which can be created within the workplace often interact and have implications on the design of the workplace. A more detailed account of the effect of environmental stressors is given in Section HHA1-8 of this Defence Standard.

4.3.1.15 Psychological Factors

One of the primary psychological objectives of workplace design is to promote User acceptance. An operator is more likely to be motivated if the workplace is:

a. Functional and logically arranged according to sound ergonomic principles;
b. Easily accessible in terms of entry and exit;
c. Easy to operate by following known population stereotypes, see note;
d. Operationally simple to use and understand;
e. Designed to avoid the risk of impairing the operator's health and safety.

If an operator has difficulty in attaining the working position, seeing or monitoring displays, or reaching controls because of poor arrangement, his/her motivation can be affected. In performing tasks, the operator's sensory cognitive and psychomotor abilities are influenced by the design of the workplace. For an operator to perceive and respond efficiently, appropriate and compatible displays and control output devices are necessary.

NOTE: Details of population stereotypes are given in Section HFE6 and further references can be found in Part 25. It should be noted that differences exist between nationalities.

4.3.1.16 Workstation Tones and Contrast

The choice of colours, tones and contrasts within a workstation is of greater operational importance than may be expected. For instance, strong colour can be a distraction, but can also have attention-holding properties and aid search and target acquisition. Generally, medium tones should be chosen for a workstation and should be neither excessively bright nor excessively dark.

In the primary visual field, contrast ratios from one tone to another should be within the ranges of 1:3 to 2:5. There should neither be harsh nor severe changes in contrast within this region. If a single operator uses more than one display screen, it should be possible to adjust the brightness to make them comparable. This will reduce the visual fatigue resulting from constant changes in adaption level when looking from one screen to another. In the peripheral vision, a contrast ration of 10:1 is acceptable.

Surfaces should be non-reflective so that glare sources are not created. Glare is experienced if a bright light source is within the visual field, whether this is seen directly or as a reflection in a shiny surface. Excessive glare (disability glare) makes it difficult to recognize detail without necessarily causing visual discomfort, although light sources more than 45° from the main line of sight are unlikely to cause glare problems. In many interiors, glare is more likely to cause visual discomfort than actual disability.

Discomfort glare may not be so apparent but its effects are cumulative and contribute to a sense of fatigue, especially after long shift periods. These cumulative effects are particularly serious when the visual task is demanding, as it is when working with Visual Display Units (VDUs). However, they can also affect the efficiency of performing relatively simple tasks.

For these reasons it is recommended that workstations should have medium toned non-reflective surfaces. For the general interior of workstations, a lighter fresher colour, such as off white, should be chosen to avoid glare.

To aid maintenance, lift-off back panels should be completely removable to reveal light-coloured interiors, and assist the spread of light within.

To take account of the light output from display screens, the immediate surround should be similar in tone and colour to avoid harsh contrasts greater than 1:3. Surrounds should also be non-reflective to avoid the occurrence of screen reflections on the work surface. For further information on lighting design and application see Section [HFE 4] of this Defence Standard.

4.3.1.17 Room Contrasts by Day and Night

Daytime. In rooms which are used 24 hours per day that have windows, it is often difficult to achieve a satisfactory mixture of daylight and artificial light. It is desirable to achieve a fairly even level of illumination during daylight which can be maintained during the hours of darkness with artificial light only. To avoid large degrees of pupillary adaptation to changes in light level (which can take up to a minute and is fatiguing), the eye should be gradually led towards brighter areas such as windows. The principle of avoiding harsh or severe contrast changes within the general visual field should be followed.

Night-time. Maintaining an even illumination level can be difficult to achieve. Light coloured blinds can help and should be provided over windows to avoid shadows and reduce reflections from the glass. Potentially hazardous objects such as pillars, need to be clearly seen, thus the arrangement of light sources should take account of their visibility and contrast. Walkways and through-routes need illuminating, and this can often be conveniently incorporated within a console (see Figure 4.3:5). For specific applications such as radar rooms and particular military circumstances, see Sections P10 and HFE4 of this Defence Standard.

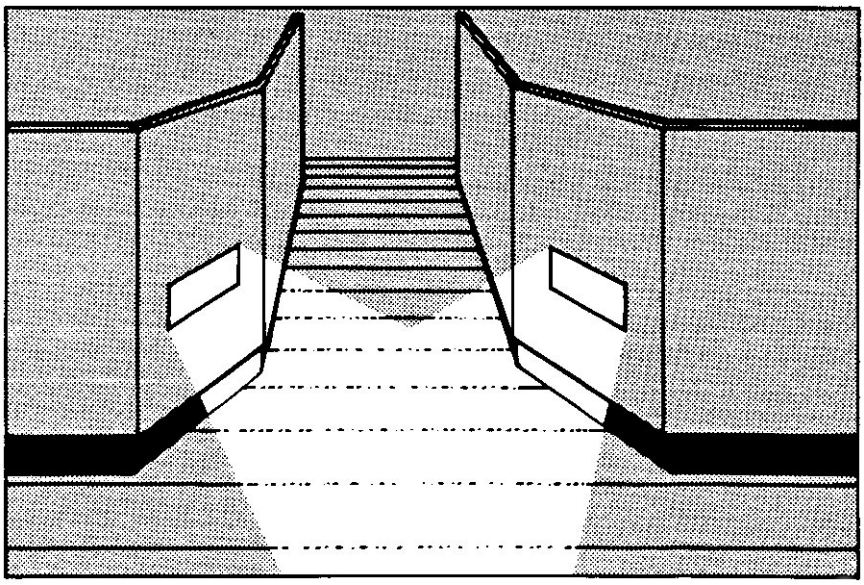

Figure 4.3:5: Console Incorporating Walkway or Emergency Lighting

4.3.1.18 Physical Surroundings

Workplace dimensions should be compatible with anthropometric characteristics of anticipated operator populations. A dynamic evaluation should be carried out by mocking-up designs in full scale using people who represent the range of the user population, and by conducting simulated operations. Refer to Part 15 for guidance on methods and techniques.

4.3.1.19 Safety

Safety for the operator must take overall priority in workplace design. A complete layout conception must include a full consideration of potential hazards. Projections and sharp corners are immediately obvious and must be avoided, but a poor layout likely to cause incorrect operator response is more difficult to recognize at the design and development stages.

4.3.1.20 Standardization

The designer should investigate previous workplace layout solutions, particularly when they reflect the guidance and specifications of published military requirements. Standardization among systems provides several important benefits including:

a. reduction in training time for a new system;
b. reduction of operator error in transferring from one system to another;
c. cost of savings in the development of new hardware;
d. reduction of logistic support costs.

On the other hand, the designer should recognize the dangers inherent in repeating a poor design concept in order to avoid the task of thoroughly analysing the operator requirements and developing a solution.

As a corollary to standardization, commercially available components should be considered. For example, control and display panels can be designed to fit manufactured console and equipment racks conforming to workplace requirements and specifications. Panel widths normally available are 575, 600 and 750 mm.

4.3.1.21 Specific Workspace and Workstation Requirements

Workstations are designed for seated or standing operations or for combined 'sit-stand' operations. In some cases the decision as to which type is used will be defined either by specification or by equipment constraints. In other cases the advantages and disadvantages of each will need to be considered before a decision can be made. Vehicle workstations and those where equipment is shared require particular attention in terms of equipment layout. Consequently the designer should fully consider the relative advantages of each equipment layout concept in relation to the tasks to be performed. The appropriate type of workstation (seated, standing or sit-stand) can be chosen on the basis of the following principles and general considerations:

4.3.1.22 Seated Operator Workstations

For a seated task, the choice of work seat is an obviously important factor where maintenance of postural support and attention is required over long periods.

A correctly designed work seat profile (see Figure 4.3:6) produces little pressure in the spinal invertebral discs and requires very little static muscular effort. Therefore any incidence of discomfort would be reduced and provide for:

a. improved body stability and equilibrium;
b. a reduction in overall static muscular workload and reduced energy consumption;
c. the operation of pedals or foot controls by:
   i) the ability to use both feet
   ii) improving accuracy.
   iii) allowing larger control force and movement application.
d. the achievement of fine and precise hand movements.
e. better blood circulation in the body.

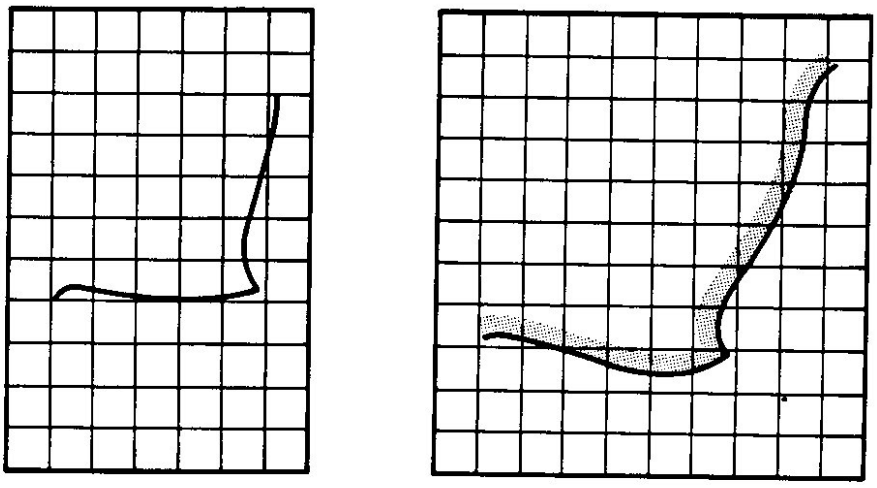

Figure 4.3:6: Seat Profiles

NOTE: A disadvantage is that the mobility of the seated operator can be restricted to a certain extent.

The critical dimensional factors for the development of the seated operator workstation include:

a. the correct eye position relative to sights, displays and any other visual requirements;

b. an adjustable seat height, the seat squab, backrest depth and breadth, along with the squab and backrest angles to provide correct postural support;

c. clearance for the lower limbs, including space for entry and exit;

d. hand and or foot reach requirements for operating controls;

e. a common eye height for large and small operators, achieved by adjusting the seat.

Figure 4.3:7 shows typical dimensions based on the US population. These should be regarded merely as guidelines, as the exact dimensions will be specific to each individual situation. They are, however, sufficiently close to the dimensions for the UK population for the data to be used without modification. Dimensions for chairs, desks and tables are given in BS5940, Part 1.

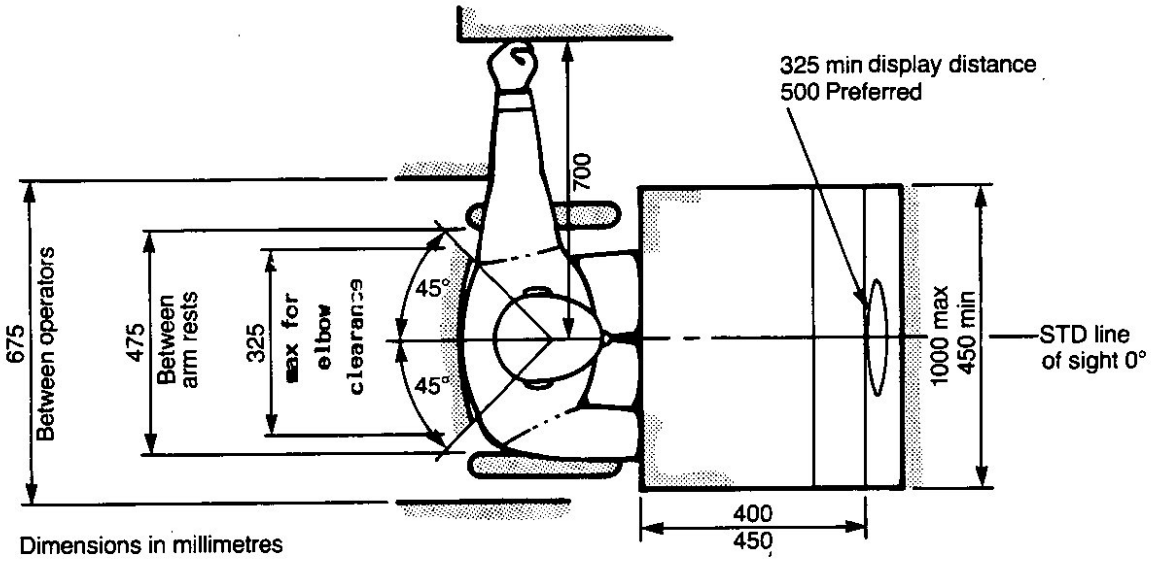

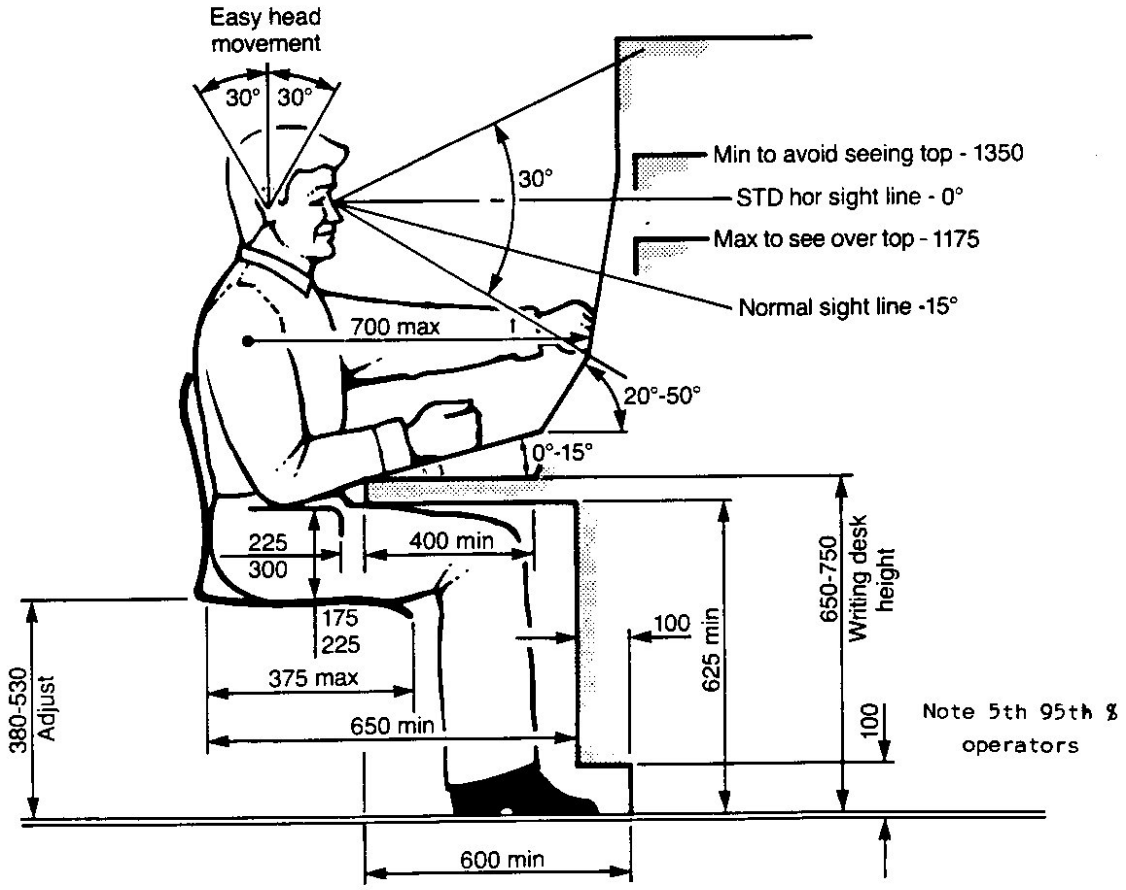

Figure 4.3:7: Suggested Dimensions for a Seated Operator's Workplace

a. Work surface. A horizontal workspace of at least 760 mm wide and 400 mm deep should be provided where space is required for writing or other similar tasks, and should be consistent with operator reach requirements (see Figure 4.3:3).

b. Work surface height. Desk tops and writing table should be 740 to 780 mm above the floor. It should be noted that sitting height is related to work surface height and is not an independent dimension. However, where a keyboard is to be used, the work surface should be lower to allow for the key height. Consequently, the height of this section should be set at a lower height between 650 mm and 680 mm (Grandjean 1997). However thin keyboards can be placed on desk tops and writing tables thus providing more knee space for the seated operator. When a seat height is fixed, work surface height should if possible be made adjustable.

c. Display placement, normal. Visual displays mounted on vertical panels and used in normal equipment operation should be placed within a vertical arc of 30° either side of the seated horizontal line of sight. The viewing distance should be appropriate for the size of detail to be resolved.

d. Display placement, critical. Indicators that must be read precisely and frequently should be placed within a vertical arc between the horizontal and 15° below the horizontal line of sight. They should be placed no further than 530 mm laterally from the centre line of the operator.

e. Warning displays. Critical warning displays should be located immediately in front of the operator and should have special attention alerting properties, such as flashing.

f. Control placement, normal. All controls mounted on a vertical surface and used in normal equipment operation should be located between 720 mm and 1380 mm above the floor level. The precise location is dependent on the nature of the control action to be performed and seat height.

g. Control placement, critical. Controls requiring precise or frequent operation should be mounted between 720 mm and 1260 mm above the floor level. Naturally the precise location and orientation of the control is dependent on the control type and nature of the control action to be performed, and the seat height. When the control panel width exceeds 1800 mm, a 'wraparound' console is one solution which allows all controls to be within reach. Left and right segments should be at an angle of 110° to the control segment, which minimizes excessive movement and stretching (see Figure 4.3:3 and Figure 4.3:8 for effective reach parameters).

NOTE: For a fuller coverage of display design and control layout etc, refer to Parts HFE6 and 8 of this Defence Standard.

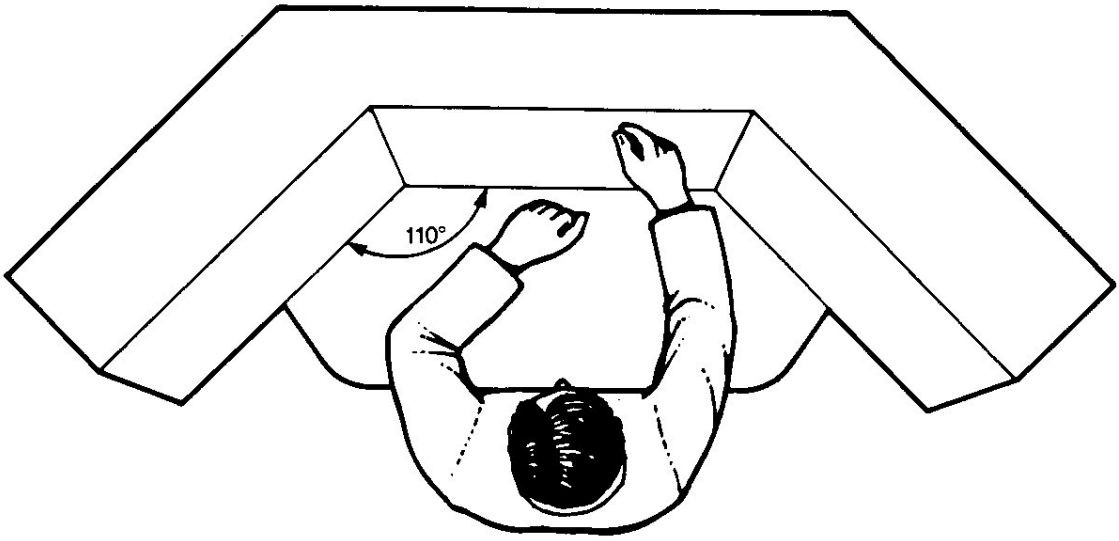

Figure 4.3:8: Horizontal Wrap-Around Console

4.3.1.23 Work Seat Design

Work seating should provide an adequate supporting framework for the body relative to the activities that must be carried out. Chairs used with 'sit' consoles are chosen to be operationally compatible with the console configuration in terms of arm rest dimensions, provision of castors etc. In order to provide adequate support for the body, a work seat with a high backrest is recommended. This is convex in the lumbar region to provide support, and is also slightly convex in the shoulder region. This support is essential to avoid postural discomfort over long periods in a seated position.

The multi-purpose chair profile shown in Figure 4.3:6 provides support to the lumbar region when the operator is sitting upright in a working posture, and reduces the muscular activity necessary to maintain this position.

The ability to change and vary the sitting posture is important for reducing muscle fatigue, and many commercial office chairs now move and pivot with the movement of the occupant. These are called 'active' chairs. As the occupant leans backwards, the angle between seat pan and backrest is increased by the combined movement of the backrest and the seat pan, simulating the profile of an easy chair (see Figure 4.3:9).

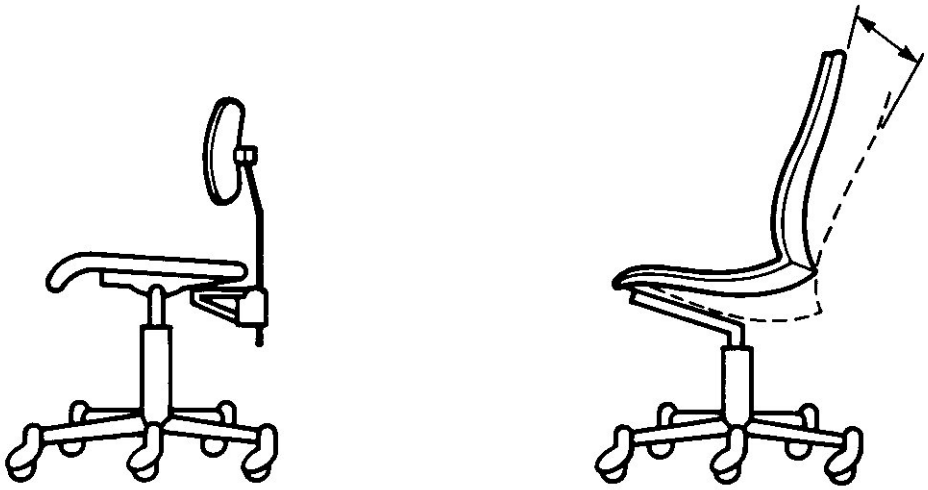

Figure 4.3:9: Tilting Chair Type with Backrest (Right) Commercial Chair type with Adjustable Backrest (Left)

4.3.1.24 General Recommendations

Recommendations for the design of a work seat shown in Figure 4.3:10 are as follows:

a. Compatibility. An important consideration is the distance from the seat height to the work height which should be between 270–300 mm, assuming that the elbows are held downward with the arms at right angles.

b. Stability. The seat should be stabilized against tipping or slipping. It should have five feet set in a circle at least as large as the seat surface itself (i.e. 400–450 mm diameter).

c. Vertical adjustment. Provision should be made for vertical seat adjustment from 375–530 mm in increments of no more than 25 mm each. Continuous adjustment is desirable as it can more easily be carried out whilst seated. All seating adjustments should be easy to make when seated.

d. Backrest. A supporting backrest that slopes at an angle between 105° and 110° should be provided. The bracket should provide correct and adequate postural support for the lumbar and thoracic regions of the spine.

e. Cushioning. The seat pan needs sufficient padding and firmness to help distribute the body weight pressures particularly from the ischial tuberosities. See Reference [66] for further information.

f. Seat covering. The covering should dissipate the heat and moisture generated from the sitting body dependent on the environment. The fabric should resist the natural forward slipping movement of the body, particularly when there is fidgeting over a long period of time. Adequate thermal and mechanical techniques exist to allow the designer to make the appropriate measurements. See Reference [66] for further information.

g. Seat surface. Should be 400–450 mm across and 380–420 mm from front to back. A slight hollow in the seat should be provided, with the front edge rounded and turned upwards at approximately 4°-6° to prevent the buttocks from sliding forwards.

h. Arm rests. Unless otherwise specified or unless the nature of the task precludes it, e.g. typing, driving, 'high-density' passenger seating where restriction to free movement of the arms and shoulders may occur, arm rests should be provided. Arm rests that are integral with operators chairs should be at least 50 mm wide and 200 mm long. Modified or retractable arm rests should be provided if necessary to avoid contact against an associated console, and should be adjustable from 180 mm to 280 mm above the compressed seat pan.

i. Foot rests. Knee and foot room beneath work surfaces should not be less that the following dimensions.
   i. Height 640 mm (if a foot rest is provided this dimension should be increased accordingly);
   ii. Width: 510 mm;
   iii. Depth: 460 mm.

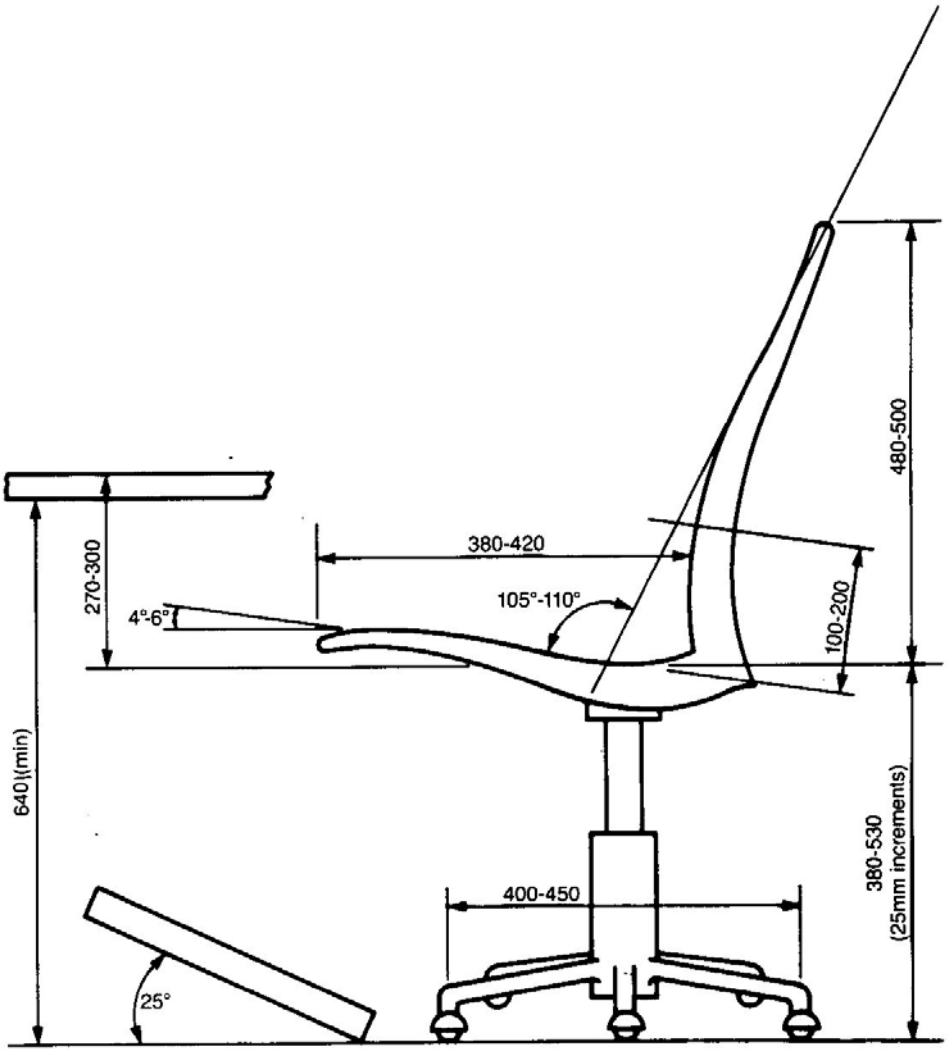

Figure 4.3:10: Typical Work Seat Design

Note: Dimensions are in millimetres

4.3.1.25 Automobile driver's seat

Adequate back support is required for seating including automobile driver seats.
Figure 4.3:11 (A) and (B) illustrate desirable and undesirable postures in relation to the spine. With unsatisfactory support (shown in
Figure 4.3:11 (B) and angles between the vertebrae (shown in the inset) can generate discomfort and conceivably cause spinal complications. The angles of the various body joints shown in
Figure 4.3:11 (C) provide the basic driving posture considered to be desirable in items of anthropometric considerations. See Reference [69]for further information.

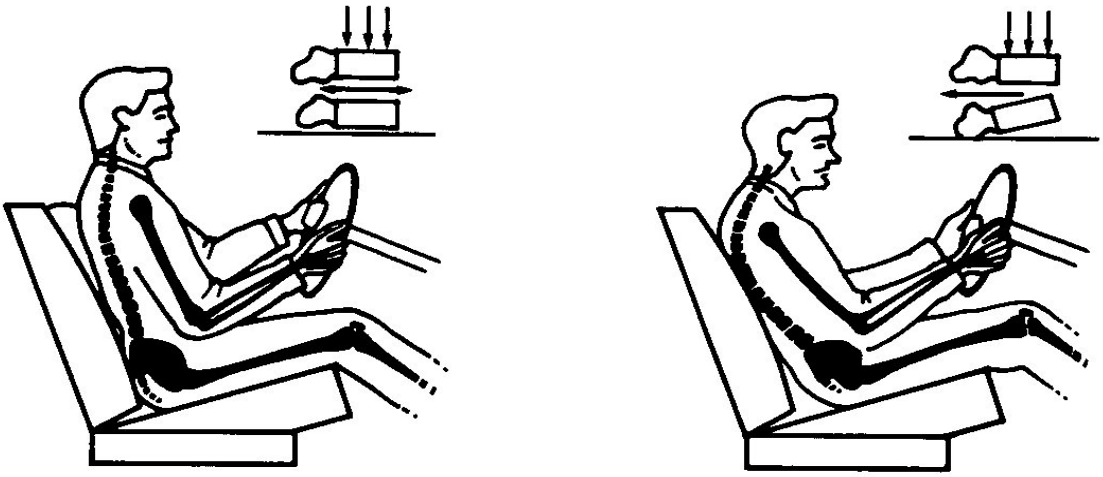

(A) Desirable (B) Undesirable

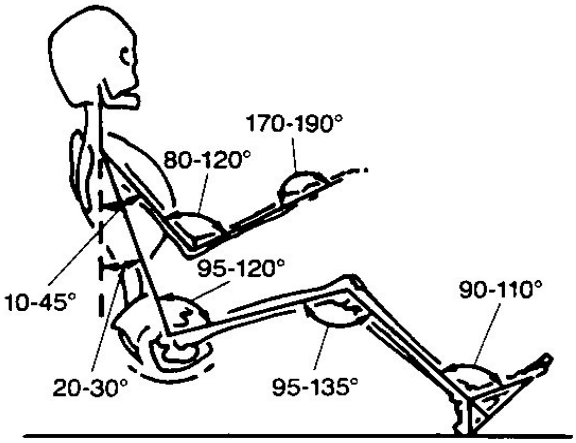

(C)

Figure 4.3:11: Anthropometric Considerations in Designing Seats for Automobile Drivers

4.3.1.26 Standing Operator Workstations

A standing posture for the operator is advantageous in the following specific situations:

a. for mobility to reach controls and monitor displays over a particularly large panel area;
b. when precise manual control actions are not required;

c. when it is impossible to provide leg room for a seated operator;
d. for sightlines to adjacent surroundings;
e. for simple go/no-go or on/off foot controls where large force applications are not required.

Standing operator workstations are not recommended for long duty periods. For short duty periods, operators can minimize fatigue by moving about. The design of workstations should ensure that controls and displays are located within the smallest operator's reach and visual field. Portable platforms for small operators to stand on are a safety hazard and are not recommended. Generalized workplace dimensions for a standing operator at an equipment console are shown in Figure 4.3:12. Again, these are provided purely as a guide and need to be contrasted against the requirements for each specific situation.

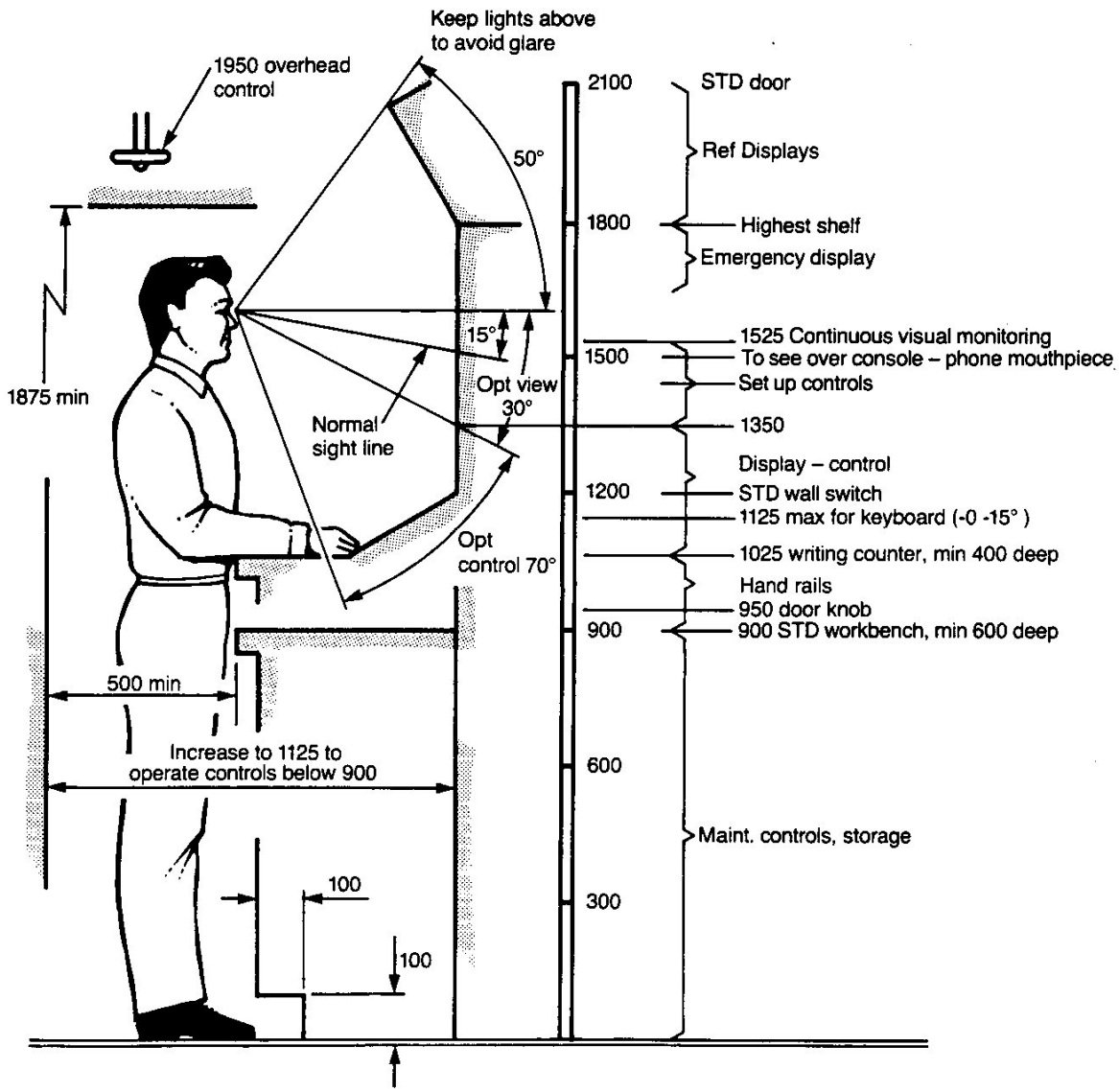

Figure 4.3:12: Suggested Parameters for a Standing Operator's Workspace

Note: All dimensions are in millimetres.

Manual plotting on a rotating table or tactical plotting board is another common standing operation. Although plotting boards are generally vertical and drafting tables generally horizontal, there are instances where plotting angles between these extremes may be desirable. Because of constraints imposed by plotting board configurations, operators may be unable to reach as far when the board is horizontal, as when it is in various upright positions, see Figure 4.3:13. Therefore these applications should be developed for the smallest representative user.

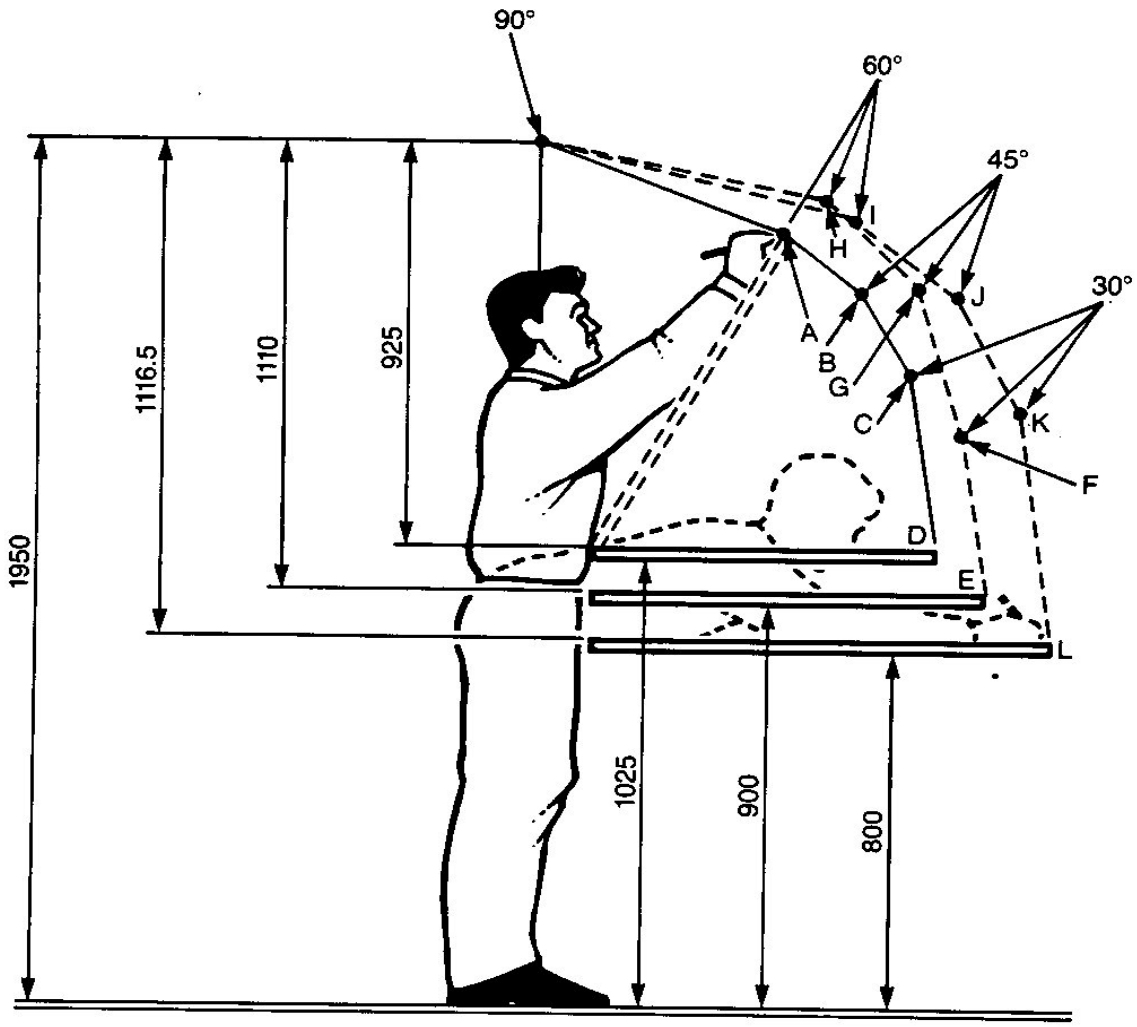

Depth of board	
A – 876	G – 1003
B – 838	H – 1041
C – 813	I – 1130
D – 762	J – 1092
E – 902	K – 1080
F – 952	L – 1029

Figure 4.3:13: Drafting and Plotting Board Dimensions (Based on an approximate 5th percentile man)

Note: All dimensions are in millimetres.

4.3.1.27 Standing Operations

Figure 4.3:12 shows some typical dimensions of a standing operator's workspace. These dimensions are based on the USA population but are sufficiently close to the UK Population to allow the data to be used without any modification.

a. Work surface height. Convenient work surfaces to support job instruction manuals, worksheets etc should be provided for standing operators. Work benches and other work surfaces should be 915 ± 15 mm above the floor, unless the task or other operations factors override this.

b. Normal display placement. Visual displays mounted on vertical panels and used in normal equipment operation, should be placed in an area between 1040 mm and 1780 mm above the floor and should be easily accessible.

c. Critical control placement. Controls requiring precise or frequent operation and emergency controls should be mounted between 870 mm and 1350 mm above the floor and no further than 530 mm laterally from the centreline of the standing operator.

4.3.1.28 Sit-stand Operator Workstations

Combination sit-stand operator workstations are recommended from a physiological and orthopaedic point of view. Standing and sitting imposes stresses upon different muscles, so that each changeover relaxes some muscles and stresses others. For example, the operator may require the stability provided by a seat for precise control actions and the mobility provided by free standing operation for the monitoring of large functional panel areas.

The combination sit-stand operator station is also useful when the operator is required to be on duty for extended periods of time and would benefit by alternately sitting and standing to relieve muscular fatigue.

The sit-stand operator station provides a compromise position, giving the operator a high chair for maintaining a seated eye height approximately the same as the standing height. Common uses of this type of arrangement are illustrated in Figure 4.3:14.

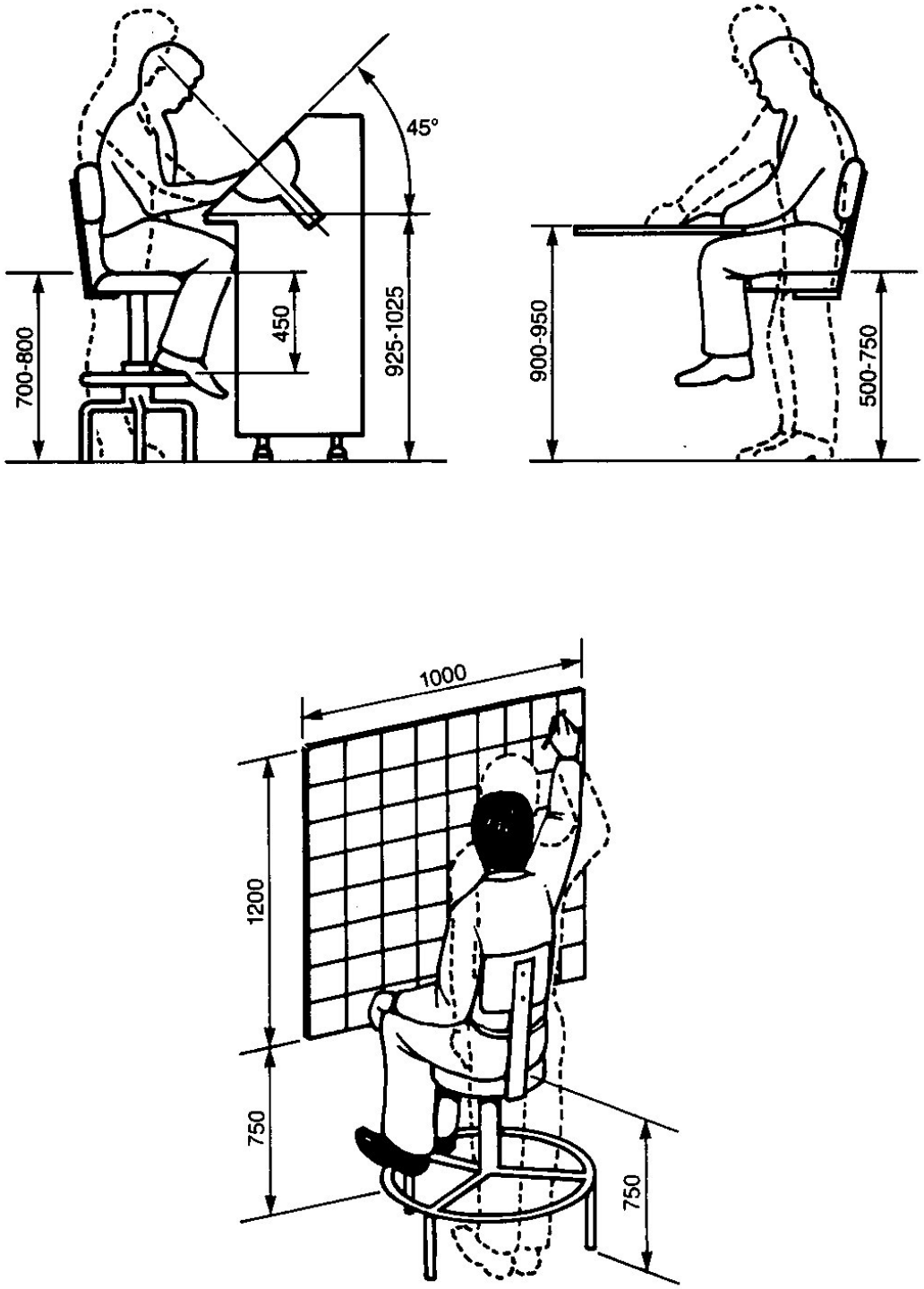

Figure 4.3:14: Sit-Stand Workstations

Note: All dimensions are in millimetres.

One situation in which the sit-stand operator station can be difficult to achieve is where a VDU should be viewed with a minimum of parallax whilst sitting or standing. Variations of the illustrated workplace are possible. Seated and standing operator station configurations should be modified to provide for a common line of sight and adequate knee space.

An independently adjustable footrest in the sit-stand layout is a necessity, to allow the ratio of footrest to seat height to be adjusted.

4.3.1.29 General Considerations

a. Kick space. All cabinets, consoles and work surfaces that require an operator to stand or sit close to their front surfaces should allow for a kick space at the base of at least 100 mm deep and 100 mm high, or greater to allow for protective or specialized footwear.

b. Handles. Handles on cabinets and consoles should be recessed whenever possible to eliminate projections on the surface. If handles cannot be recessed, they should be designed to eliminate the risk of injuring personnel and the snagging of their clothing and equipment. For further information on handle dimensions see Parts HFE 6 & 9 of this Defence Standard.

c. Workspace. Whenever feasible, free floor space of at least 1220 mm should be provided in front of each console. For equipment racks that require maintenance, free floor space should be provided whenever feasible, using the following criteria:

   i. Depth of work area. The distance from the front of the rack to the opposite surface or obstacle should be not less than 1070 mm.
   ii. Lateral workspace. The minimum lateral workspace for racks having drawers should be as follows (measured from drawers in the extended position):
      1. for racks having drawers weighing less than 20.4 kg: 460 mm on one side and 100 mm on the other;
      2. for racks having drawers weighing over 20.4 kg: 460 mm on each side.
   iii. Storage space. sufficient space should be provided adjacent to the workspace for the storage of manuals, worksheets and other materials that are required for use by operational or maintenance personnel.

4.3.1.30 Common Working Positions

Some basic anthropometric dimensions of the human operator are given in Table 4.3:1, the standing and sitting positions in which these dimensions are taken are illustrated in Figure 4.3:15. The male dimensions are based on British Army anthropometric survey, whilst the female dimensions are based on British civilian figures. These figures are drawn from data in Part P3 of this Defence Standard (Body Size) which should be consulted for more detailed and accurate coverage of anthropometry. The figures given include 33 mm for shoe height and (where appropriate), 64 mm for combat helmet and boots.

	Percentile values (mm)			
	5th percentile		95th percentile	
	Male	Female	Male	Female
1. Weight (including combat clothing)	62 kg	48 kg	96 kg	84 kg
2. Stature (clothed, including shoes)	1705	1570	1915	1770
3. Functional reach (back of shoulder to thumb pinch-grip)	720	665	855	785
4. Dynamic forward reach (including forward shoulder movement)	840	785	975	905
5. Vertical functional reach, standing (one-handed, including shoes)	2085	1915	2375	2210
6. Vertical functional reach, sitting (one-handed)	1285	1175	1460	1345

Table 4.3:1: Anthropometric Data for Common Working Positions

Note: For more up to date data supplied by INM see Part 17 Personnel Domain of Def Stan 00-25 and the associated data tables.

1

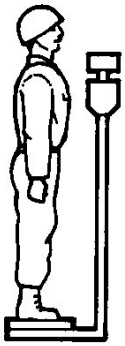

Weight, clothed (including combat clothing, helmet and boots).

2

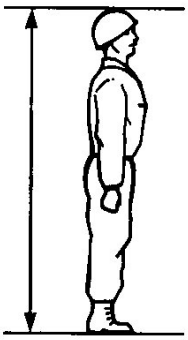

Stature, clothed (including combat clothing, helmet and boots). Standing erect, heels together, measured from floor to top of helmet.

3

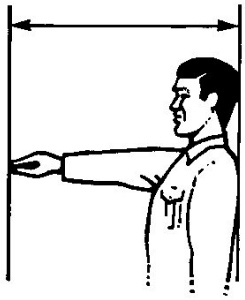

Functional reach, standing erect, looking straight ahead. Both shoulders against wall. Right arm horizontal. Measured from wall to thumbtip in pinch-grip.

4

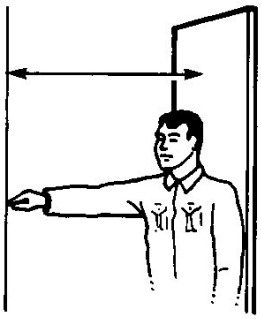

Dynamic forward reach, standing erect, looking straight ahead. Right shoulder extended as far forward as possible with back of left shoulder firmly against wall. Arm horizontal, measured from wall to thumbtip in inch-grip.

5

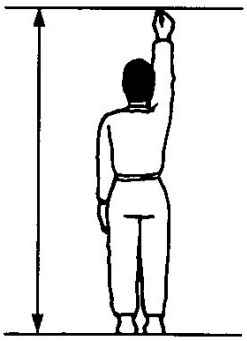

Vertical functional reach, standing with heels slightly apart. Right arm extended overhead. Measured from floor to thumbtip in pinch-grip.

6

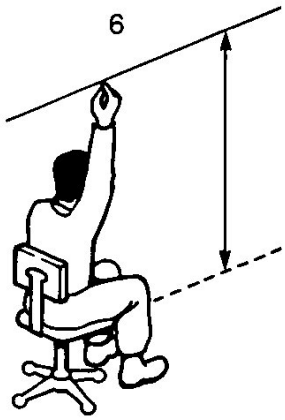

Vertical functional reach, sitting. Right arm extended overhead. Measured from seat surface to thumbtip in pinch-grip.

Figure 4.3:15: Anthropometric Data for Workspaces

4.3.2 Approach and Methods for Workspace and Workplace Design

From an assessment of the situation, a problem is identified and used as an objective for the new or improved accommodation/workspace design. Then, tasks and the accommodation/workspace area are evaluated using methods from anthropometry, biomechanics, musculo-skeletal disorder disciplines and workload analysis to assess risk in the workspace. Studies (lab or field based) can then be performed that ensure proposed changes will meet objectives and improve the working situation.

Specific guidelines should be stated which may involve the suppliers of equipment. This is to ensure emphasis is place on equipment having desired ergonomic features as opposed to being off-the-shelf items available at lower costs. An implementation phase follows whereby hardware items are delivered and installed. Here, good ergonomic practice dictates that original designers are involved to oversee start up and provide advice on new equipment. Finally the new design should be evaluated with findings systematically reported back to designers.

Workplace design must also take account of manning (M1) and any necessary clothing and/or equipment requirements (P4 and P5). Anthropometric information concerning users can be found at P3.

To a certain extent the workspace design associated with military equipment overlaps with the design of the equipment itself, as for example with control consoles, cockpits, etc. The method is described below.

Workplace design is related to the human factors activities in the detailed design stage of system development (see Part 15 of this Defence Standard).

Correct workplace design will expect system designers to cover the basic human data of the operator (See Parts P3-10 of this Defence Standard) with design guidance (See Parts HFE4-10 of this Defence Standard) in order to construct a workplace fit for human use.

4.3.2.1 Approach to Design

In order for operators to complement the effectiveness of a workplace system, they must be integrated with the workplace in such a way that their capabilities are utilized to the maximum. This can be achieved by selecting the human sensor link which makes the best use of human capacity, sensitivity and reliability. By choosing a linking approach between the operator and the workplace, the total system effectiveness will be maximized. Human limitations must be recognized, and machine and equipment alternatives should be put forward instead.

The requirements for the proposed workplace should be reviewed until everything possible about the basis for the workplace and the conditions under which it is to be used, is fully understood. All critical workplace features should be identified including talking to potential users, and wherever possible examining equivalent workplace systems in use. Consideration should be taken of what functions need to be carried out to fulfil the workplace objectives. If there are any reasonable options available, consider which of these should be performed by the operator. If there is provision for adequate redundancy in the workplace system, especially of critical functions, redundancy should be provided in the form of either a back-up system or by parallel components (either operators or machines).

Where practical, the services of a qualified human factors specialist should be engaged to assist and advise throughout the development of the proposed design and in its final production. The specialist will need to prepare a specification list of human factors issues in their order of apparent importance. These should be identified in terms of safety, operational importance and so on, and the data required for their solution should be identified. The criticality of the data should be determined by the importance of the issue to which it relates.

When this is impractical, the acquisition and or development of a human factors check list for use throughout the design, development and production cycle should be utilized. Check lists should be used with caution. They should neither be confused with operating procedures nor considered a substitute for human factors expertise. Although general checklists are provided in this section, the creation of a checklist tailored to the nature of the proposed workplace design should be developed. Check lists typically require modification as the design development progresses, and so more knowledge is gained about the workplace design features. As these additional user-hardware interface details are generated, further human factors questions will require addressing and monitoring throughout the workplace design cycle.

Initial workplace design concept should be reviewed to ensure that all potential user interface aspects of the proposed concept have been properly identified and considered. The purpose of this step is to avoid establishing constraints to good human factors practice.

Using the checklist, each design activity should be monitored as it progresses, from preliminary through detailed design steps, making sure that the human factors aspects are kept constantly in mind, and that good human factors practice, principles and criteria are being considered during each step of the workplace design process. If compromises are being made, how and why these are being introduced into the design should be recorded. This record may be extremely important for example, if the Ministry of Defence (MOD) requires evidence that human factors have been taken into account, or justification for ignoring them is required. If the user brings proceedings in law against the designer, the designer will need evidence to prove that he did his best to prevent misuse of the workplace (i.e. that all practicable means to minimize the probability of either misuse or potential hazard to the user had been taken).

NOTE: Documentation of human factors during design is becoming more urgent as legal aspects of design-induced injuries place the burden of safety on the designer as well as the manufacturer.

Mock-ups should be used to test the efficacy of all user-hardware interface designs, with subjects taken from either end of the required anthropometric range of the user population. Examining and evaluating the mock-up operator interfaces in terms of human performance efficiency (i.e. time, error, protrusions, fouls, encroachments, avoidance of discomfort, inadvertent hazard potentials etc, should be carried out). Observations should be recorded and appropriate design modifications made where necessary. The mock-up should then be modified and re-evaluated.

Experiments when necessary, should be performed to establish workplace design criteria, especially where previously cited reference guides do not provide adequate information for design decisions. This may require development of special, dynamic, real-time simulations of procedural and environmental conditions.

A hardware workplace prototype should be fabricated and evaluated under real-life conditions using typical user subjects. Subjects should again be representative of the range of potential users, and any trials that are carried out should be realistically representative of the workplace system. It should be ensured that measurements taken from subjects are relevant and will result in usable guidance for setting the workplace system parameters. Through short 'pilot trials', checks are to be carried out to ensure that the trial techniques proposed are viable. Measurements can then be taken and the results derived. Trials should be designed sot that the minimum of redundant data is generated.

Quantitative performance measures of the total User-hardware operation should be obtained to prove that the combined human-machine operation is satisfactory. Any deficiencies should be fed back into the workplace design cycle, and appropriate design modifications made. Retesting may then be necessary.

Final production drawings should be critically reviewed prior to releasing them for final production, fabrication and assembly. Critical areas should be identified where lack of proper production quality control might result in poor user-hardware interface results, because of unsatisfactory manufacturing or assembly procedures. Steps should be taken to establish necessary procedural control and inspection in order to preclude mistakes in the factory.

Acceptance testing of hardware should be performed before it is approved for final delivery to the Ministry of Defence (MOD). These tests should include operator testing, as well as visual inspection and or tests of hardware and software components.

4.3.2.2 Procedure

A procedural approach to workplace design will require functions to be allocated by a combination of professional engineers and human factors specialists. There are few individuals who possess enough professional expertise in both advanced hardware/software technology and human factors technology, to efficiently allocate functions. Hence a workplace design group will require both an engineering team and a human factors team to efficiently allocate functions. The engineering team should describe the engineering workplace concept, and the human factors team the role of the humans operating it. The role of the human statement should define what functions humans are expected to play in the workplace whether as operators, maintainers, managers (i.e. commanders), or users of the workplace product.

4.3.2.3 Function Allocation

The process of function allocation can be defined as a five step procedure for embedding the allocation of decisions within workplace design. The allocation of decisions will require the application of four principal rules. See (c) below and Reference [68] for more detail. The procedure is as follows:

a. Prepare for workplace design by organizing the design teams, clarifying requirements, and planning a design documentation base.

b. Identify functions by categorizing whether or not they are either primary functions in terms of their inputs and outputs, or if they are of a secondary nature to the function of the workplace system. Return to this step later to reorganize into smaller functions.

c. Propose/produce workplace design solutions. This is the major step in the workplace design cycle where interaction takes place between engineering, allocation and human factors decisions. Four rules can be applied for developing the allocation hypothesis. They are by:

   i. Mandatory allocation (i.e. there are mandatory reasons for allocating a function, or portions of it, to either humans or machines).

   ii. Balancing the values by determining the hypothetical allocation between humans and machines as performers of the intended function.

   iii. Allocating on a utilitarian and or cost basis. For utilitarian allocation, a function may be allocated to humans simply because their presence is required, and there is a compelling reason why they should perform the work.

   iv. Otherwise, consider the relative cost of human and machine performance and allocate on the basis of least cost. However, this may not be straightforward to determine since one must consider the relative efficiency and effectiveness of human versus machine execution of a function.

   v. Allocating functions for affective and cognitive support. Humans should be treated as different to machines in two qualitative respects. Affective support refers to the emotional requirements of humans, such as their need to know that their work is recognized for its value, to feel personally secure, and to feel that they are in control. Cognitive support refers to the human need for information, in order to be ready for actions and decisions that may be required.

NOTE: Where adequate information for allocation is not available, human factors judgements based on partial information will result in better design decisions. These judgements should be made by those whose professional training and experience put them in the class of experts, whether in the field of night vision, physical anthropometry, hearing disorders, perception, heat stress, acceleration, learning, decision making, or otherwise.

d. inevitably, this will require trading off certain advantages for others. Balancing out these advantages and disadvantages will generally need to take account of a variety of considerations, e.g. engineering feasibility, human considerations, economic considerations, and others. However, the general objective or aim of the workplace system must not be lost sight of (i.e. that trade-offs should be made on the basis of the stated or implied system objectives and the accompanying performance requirements).

e. test and evaluate the allocation hypothesis. It is during this step that the training and experience of the human factors team will be of significant value in locating and interpreting relevant data on human performance.

f. iterate the workplace design cycle in order to correct subsequent errors, optimize the workplace design and complete the workplace to an acceptable level of detail.

In conclusion it would seem that the most effective approach to this procedure is by a trial and error technique using demonstrators to illustrate, by example, possible workplace design solutions.

4.3.2.4 Preliminary Design

At the preliminary design stage, alternative layout concepts of the new workplace are examined to investigate whether or not they are workable prior to detailed design. Their main feature is that they are quickly adjustable and easily changed.

4.3.2.5 Paper Mock-ups in Two-Dimensions

Paper mock-ups are low cost and quick to prepare. Two dimensional layouts are constructed in reduced scale orthographic projection. The operators' locations are usually depicted by a circle with an indication showing the operators' line of sight. Magnetic boards can also be used thus enabling layouts to be displayed vertically to the design team. Collective discussions of this first-step evaluation of alternative layouts can be easily viewed and changed for assessment. In addition, magnetic boards are also suitable for the preliminary examination of full-scale relationships on a vertical surface, and give a first opportunity for evaluating spatial relationships and defining reach.

Scaled manikins at each end of the population range are manipulated to ensure that the required range can be accommodated equally well. Paper mock-ups should neither be regarded as toys nor ignored by the professional designer. High-cost mock-ups do not provide any further useful information than low cost paper ones at this early stage, but can establish important criteria for the development of more detailed mock-ups later on in the workplace design process.

4.3.2.6 Foam Model in Three Dimensions

Techniques such as expanded foam (see Figure 4.3:16), soft wood and 'Lego ®' type models (see Figure 4.3:17), can be generated for evaluating alternative workplace layouts. These models are usually on a reduced scale and constructed from materials which are easy to cut and assemble.

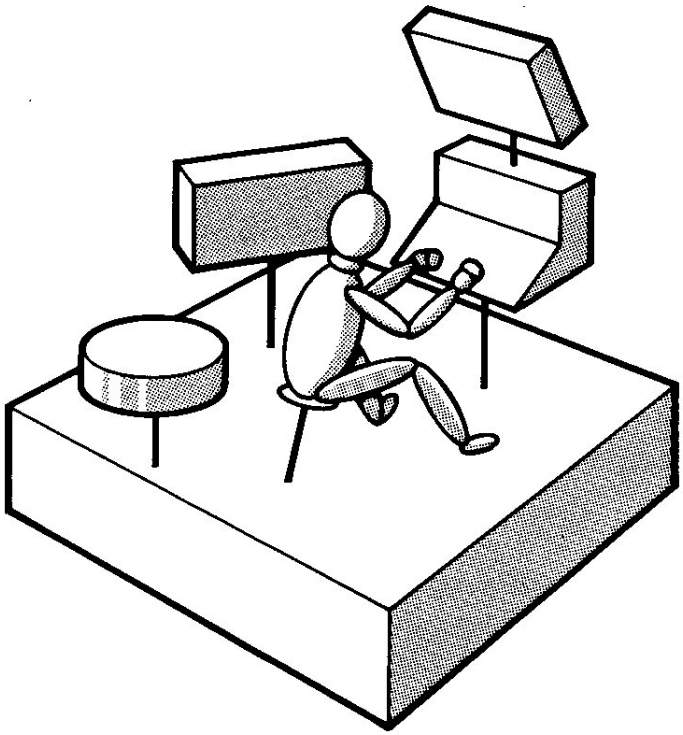

Figure 4.3:16: Diagrammatical Representation of Foam Model

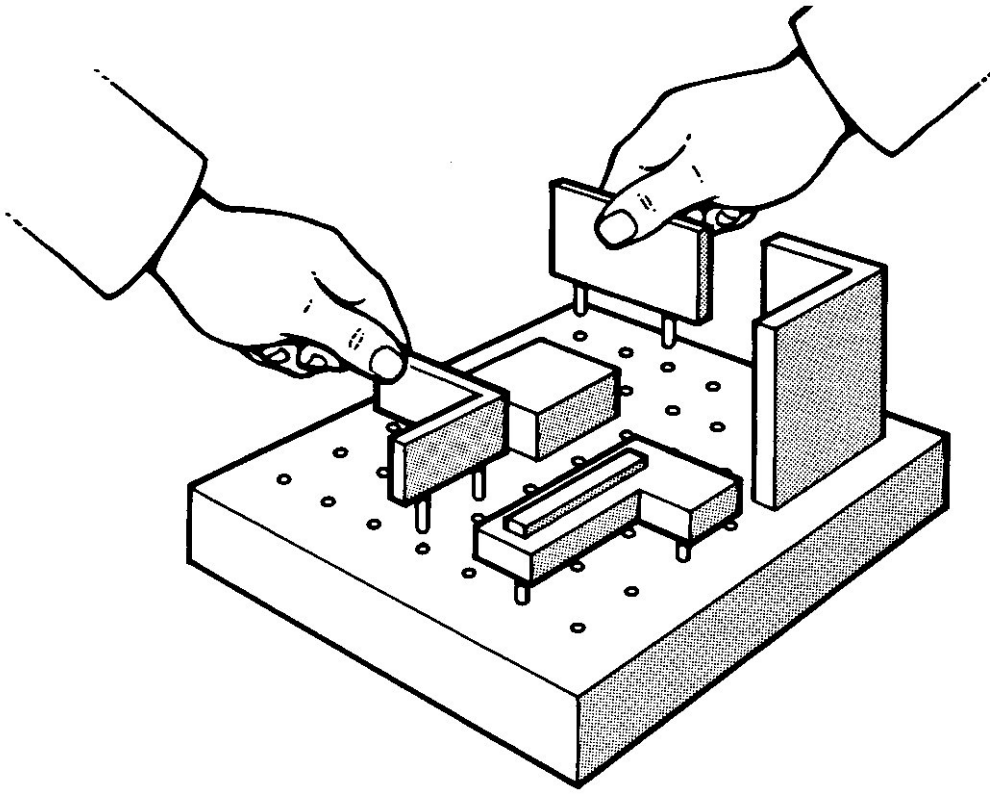

Figure 4.3:17: Representation of 'Lego ®' Type Model

4.3.2.7 Preliminary Mock-ups in Three Dimensions

Preliminary mock-ups can be either in reduced scale model or in full scale form. Reduced scale models are especially useful for evaluating either the total arrangement and layout of large items such as buildings and structures, or furniture and fittings within a building or vehicle. They are particularly beneficial for interpreting the user's layout requirements. Their scale should be selected to suit evaluation purposes, and will depend on the overall number of large scale elements within the total arrangement.

The basic full-scale three dimensional mock-up is principally valued for representing spatial inter-relationships between the operator and their controls and displays. Clearance, reach and viewing parameters can be established as well as deciding upon whether or not the operator is required to sit and (or) stand. Additionally, they are extremely useful for identifying requirements for ease of maintenance of equipment. (for further details on design for maintainability, see Part HFE9 of this Defence Standard).

Higher level preliminary full-scale mock ups may be required once the general layout of controls and displays is established. Actual instruments can be mounted and activated to various degrees, depending on the purpose of the simulation. For example, instrumentation can be powered, by linking with a computer system, to simulate and evaluate alternative control and display concepts.

A more advanced level of the full scale mock-up can be mounted on a dynamic platform to simulate the motion of a land, sea or air based vehicle. This level of mock-up, in terms of time and cost can only be justified if the dynamic aspects of the man-machine interface are particularly critical to the functioning of the operator(s). Mock-ups at this level of sophistication can approach the potential of a training simulator but for operator safety must be ruggedised.

4.3.2.8 Detailed Design

At this stage, the proposed workplace design is expanded to include more detail. Scaled drawings are constructed, and the design is evaluated using mock-ups and simulation, leading to the prototype workplace. During this period, test and evaluation procedures are carried out by human factors specialists as well as others with competing interests, and often become highly iterative and interactive. This characteristic of detailed workplace design requires the designer to be flexible and responsible to constructive comments.

4.3.2.9 Scaled Drawings Including Manikins

Engineering drawings for workplace design are usually scaled between 1/10 to ½ scale and are more often depicted in side elevation rather than in plan or end evaluation. Scaled two-dimensional manikins representing the physical dimensions of the unclothed human body provide a guide for initial estimates of workplace fit. Fabrication of sets of manikins to scale require a skill not generally taught in standard engineering course.

Drawing the human figure from life under formal training will aid the designer to draw manikin templates from the limited number of anthropometric dimensions available. They are usually made to represent the two-dimensional aspect of a human as seen from the side (sagittal plane). Front (coronal) and plan view (transverse plane) manikins, however, are less common and are probably more difficult to construct. To aid in their construction, dimensions of body linkages expressed as a percentage of stature are contained in Part P3 of this Defence Standard. Dimensions for constructing manikins in the seated posture obtained from static anthropometric data should not be used in the standing posture or vice versa, because they will be inaccurate due to the complexity of joint articulation. Pairs of manikins are usually constructed from nude anthropometric data to represent the 5th and 95th percentile range of the target population in all dimensions, but wider ranges have been required for specific populations.

The construction of either scaled manikins based on nude computerized design aids are available, by the manipulation of human-model imagery in pseudo–three dimensions within the line construction of displayed drawings, is probably the best that can be achieved. What is most difficult for the equipment designer is to interpret the derived resultant working postures in terms of human factors acceptability, because he/she is unlikely to have the background experience and knowledge of the military human factors specialist.

4.3.2.10 Computer Aided Design (CAD)

Computer Aided Design (CAD) can assist in the workplace design process provided it:

a. reduces design time.
b. improves design.
c. reduces the designer's workload.
d. reduces design cost.

Engineering companies have mainly used CAD for three-dimensional (3D) geometric drawings and have included the man-model only as a secondary feature. The fundamental difficulty of incorporating the man-model has been because the computer capacity required to manipulate the model is excessive and the provision of establishing the updating an adequate human factors base has not been provided. An advantage of CAD is the ability to provide instant drawings without the need for draughtsmen.

The 3D modelling of the workplace is available on several CAD systems. SAMMIE (System for Aiding Man-Machine Interaction Evaluation) for example, has been specifically developed to enable human factors evaluations of workplace design at the concept stage, prior to the construction of full scale detailed mock-ups (see Figure 4.3:18).

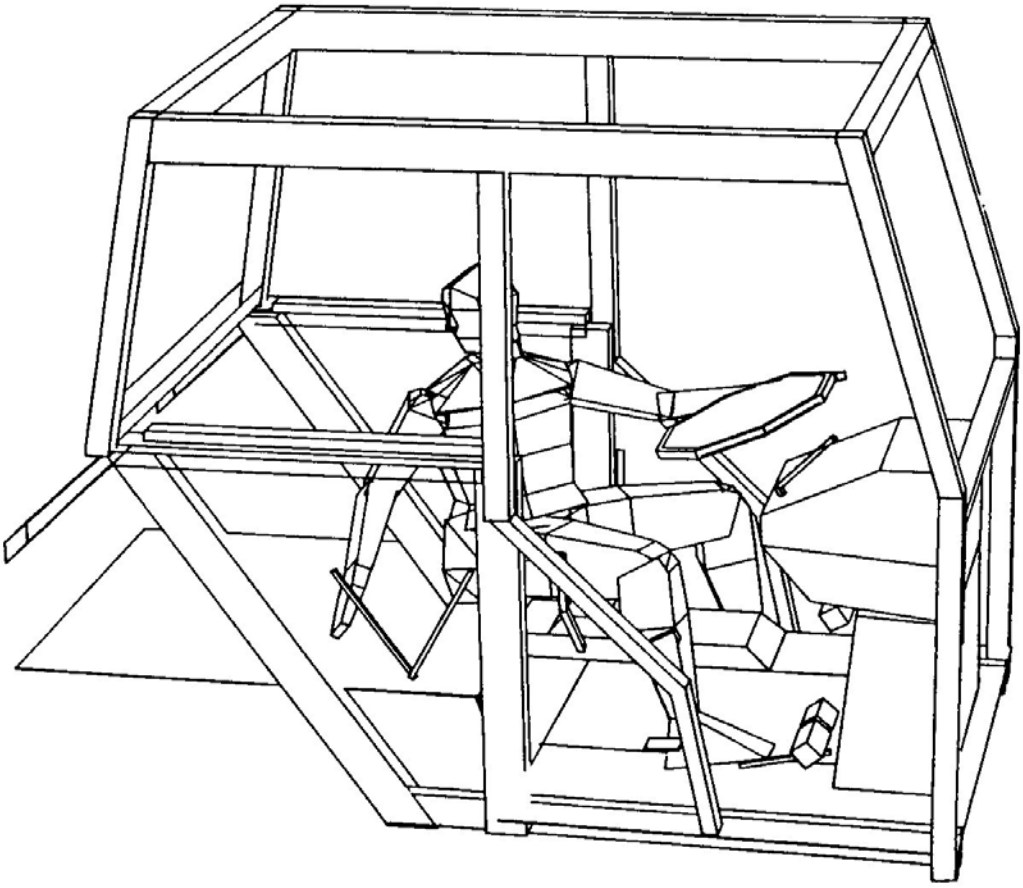

Figure 4.3:18: Sammie CAD

Stereophotogrammetry has also been considered for portraying anthropometric data and the production of 3D envelopes of the clothed person. Pairs of stereophotographs are taken of the subject and analysed to produce contour maps of his/her outer surface. From these photographs, 3D co-ordinates are obtained from any point on the surface. It is considered to be the best method of producing 3D anthropometric data and body envelopes. Unfortunately, it does not produce a mobile anthropometric clothed model of the man for articulating in an interactive CAD system. Video-grammetry using closed circuit television may provide a better data base of clothed anthropometric dimensions for future use in a CAD system.

4.3.2.11 Full-Scale Wooden Mock-ups

The construction of the wooden mock-up provides the means for deciding the internal layout of the workplace. Alternative layouts can be easily considered before the final design choice is made. Workspace and clearance estimates must be assessed using a range of representatives of the User population wearing their likely maximum clothing bulk.

4.3.2.12 Dynamic Simulation of Workplace and Equipment

The construction of any physical mock-up of the workplace is, in a sense, a simulation of the man-machine environment. As workplaces become more complex, there will be external factors which may exert overwhelming effects on the operator(s) performance. Both external and internal environmental parameters may require simulation and control because these may influence how well the man-machine system functions. The extent of realism may depend on several aspects including:

a. How important each variable is in affecting the eventual performance of the operator.
b. How realistic the important variable can be simulated (i.e. poor realism can be worse than none).
c. The length of time required to develop the simulation.
d. Whether the cost of simulation is justified: If it exceeds the cost of the final hardware, the simulation cannot usually be justified. The designer must also avoid the temptation of creating an exotic simulation just because it is a design challenge.

When the dynamic environmental characteristics of the workplace are considered to have a marked effect on the behavioural response of the operator, the design of a simulator is justified. If critical physical conditions are considered to affect the efficiency of the operator, such as noise, vibration, gravity forces, atmospheric pressures and temperatures outside of normal limits, special simulations of the workplace may be constructed.

For example, human factors aspects considered highly pertinent to combat operations for military aircraft are the pilot's external vision requirements and the control of the aircraft. Among the more significant visual aspects are:

a. Formation flying.
b. Aerial combat.
c. Ground reconnaissance. Typical considerations for aircraft control are the effects of:
d. Physiological stressors such as high 'g' forces on the pilot caused by tactical and combat requirements.
e. Data and task saturation caused respectively by information and performance overload.
f. Disabling wounds to the pilot.
g. Critical aircraft control damage which makes the aircraft difficult to fly.

However, the designer should note that when simulation of physical conditions explores stressors that are hazardous to the health and safety of the operator, human factors specialists, ethical bodies, and medical staff must be highly involved early on in their design, to closely monitor any testing which involves human subjects. Further information can be found in Woodson, Tillman and Tillman (1992).

When the simulator designer cannot guarantee the health and safety of the operator, the operator must be provided with protection. Protection should either be designed into the workplace, or the design must be compatible with individual protection worn by the operator. From a human factors viewpoint, it is usually better for overall protection to be designed into a workplace, in order to protect all the operators, as individual protection often degrades operator performance by interfering with the human senses, restraining the operator in the workplace, and usually adding to anthropometric dimensions with extra clothing bulk. If, in the course of duties, the operator requires to leave the workplace and enter a hostile external environment, individual protection will need to be stowed internally beside the operator, in dedicated places close to the operating position. Where workspace constraints makes donning of individual protection difficult, either some or all of the individual protection will need pre-wearing, before engaging in external exposure.

When simulator designers cannot either satisfactorily protect the operator within the workplace environment, or provide satisfactory workspace dimensions, the operator must be excluded from the workplace. If human factors interactions are still required for workplace control, these operations must then be carried out remotely by the operator.

There are broadly two types of workplace simulator, one designed for research and the other for training purposes. For the detailed design of the workplace, human factors activities should include them both, because each of them contributes to design evaluation (see Clause 4.1). A most recent example is of a virtual cockpit for investigating the concept of the 'electronic crewman'. Both research land training simulators are tending towards computer generation rather than three-dimensional representations of the task.

4.3.2.13 Demonstrators

Workplace demonstrators may resemble their real-life counterpart, dynamically and operationally. However, if a crew station is part of a research programme, it will not necessarily represent any specific system.

4.3.2.14 Rigs

Workplace rigs can be designed for both mobile and static applications. When the rig is dynamic and human operators are included, it is essential that human factors specialists rate the rig to ensure the operator's safety.

4.3.2.15 Design Reviews

The design contractors, the MoD IPT, the human factors specialists, and others involved, conduct regular technical and design review meetings to monitor progress and ensure that all conflicting views and opinions on the workplace design are voiced and minuted. The Chairperson must ensure that any conflicts are satisfactorily resolved. Any unresolved issues must be documented by those parties who raise them, and copies sent to both the project manager and the operational requirements branch concerned. Sometimes, aspects pertinent to specialist interests may still not be satisfactorily resolved, and require further work. Experience has shown that in the workplace design of mobile land-based systems, human factors specialist advice is not always followed despite timely advice being made available to the MoD IPT. Often the reasons given are that the operator is adaptable and can work in less than optimum conditions. However adaptation can degrade the operator's performance with subsequent loss to his efficiency. Where modifications are required, the MoD IPT issue task requests to the contractors and action them to include changes in the initial build standard.

At the conclusion of this stage, the design is considered frozen and drawings for the final detailed design are sealed.

4.3.2.16 Prototype System

The initial prototype workplace is built from the sealed drawings for subsequent test and evaluation. User opinion is essential at this stage in order to reach agreement and acceptance of the workplace prototype. Modifications, if necessary, must be fed back into the detailed design of the prototype workplace prior to its production, otherwise costly retrofits will be required.

Regular trials panel meetings under the project manager are conducted as a forum for reporting how trials are going and to both allocate and provide the resources for trials and associated purposes.

Trials reports are written and are included in the acceptance report document. Comparisons are then made as to whether or not the workplace meets the of the URD and SRD. The acceptance report document is discussed in detail at a pre-acceptance meeting prior to the Director of Equipment Capability (DEC) formally accepting the workplace for in-service use.

Where some aspects of the workplace system do not meet the requirements, and providing that further work can rectify any outstanding aspects, acceptance can be granted with provisos. Provisos are carried out during post-design services work and are specified on the acceptance certificate. When the design does not meet the URD and SRD and is unlikely to do so, even with further development, the user will not accept it and the project is either terminated or subjected to a major review.

4.4 Definitions

Alarm A type of status indicator used to inform the operator of a hazardous condition or state.

Anthropometry The measurement of human body dimensions. See Def Stan 00-25 (Part P3).

Brightness The subjective response to luminance in the field of view dependent upon the adaptation of the eye.

Contrast (see also Def Stan 00-25 (Part 25)) A term that is used subjectively and objectively. Subjectively it describes the difference in appearance of two parts of a visual field seen simultaneously or successively. The difference may be one of brightness or colour or both. Objectively, the term expresses the luminance difference between the two parts of the field by such relationships as the difference between the luminance of the target and background.

Disability glare. Glare produced directly or by reflection that impairs the vision of objects without necessarily causing discomfort.

Glare The discomfort on impairment of vision experienced when parts of the visual field are excessively bright in relation to the general surroundings.

Maintainability The ability to carry out rapid and reliable system restoration, using ordinary trained people and reasonable support facilities to maintain the equipment at a specified level of performance.
Maintenance All activities necessary to keep materiel in, or restore it to, a specified condition.

Mock-ups A mock-up is a three-dimensional, full-scale replica of the physical characteristics of a system or subsystem (of model). A mock-up can be developed only after equipment drawings are produced, although these drawings may be only preliminary ones.

Stressor An impelling force which causes a demand upon physical or mental energy.

Task A set of related functions performed by one or more individuals and directed toward accomplishing a specific functional objective and, ultimately, to the output goal of a system.

Visual field The full extent in space of what can be seen when looking in a given direction.

Visual task The visual element of the work being done.

Warning A type of status indicator used to inform the operator *in advance* of a condition or state that requires immediate attention and immediate action.

Workspace envelope. The personal space within which an individual works and where the controls operated and displays viewed are arranged for efficient use.

Workplace The complete working environment within which all of the operators and equipments are arranged to function as a unit.

4.5 References

The documents and publications referred to in this Part of the Standard are as follows:

[61] BS 5940 Part 1 1980. Design and dimensions of office workstations, desks, tables and chairs

[62] Flowers, K. 1975. Handedness and Controlled Movement. British Journal of Psychology, 66, 39-52.

[63] Kroemer, KHE and Grandjean E (1997). Fitting the Task to the Man. 5th Edition. Taylor and Francis Ltd, London.

[64] McCormick, E J & Saunders, MS (1993). Human Factors in Engineering and Design (7th Edition).

[65] Nielsen, J. (1993). Usability Engineering. Morgan Kaufmann

[66] Osborne, D. J. (1987). Ergonomics at work. (2nd Ed). Wiley-Interscience Publishers

[67] Pheasant, S. (1991) Ergonomics, Work and Health. Macmillan Publishers

[68] Price, H. E. The Allocation of Functions in Systems From Human Factors, 1985, 27 (1) 33-45

[69] Rebiffe, P. R. (1969). Le Siege du Conducteur: son Adaptation Aux Exigences Functionnelles et Anthropometriques. Ergonomics, 1969. (From McCormick and Sanders 1982, page 341).

[70] Salvendy, G (1997) Ed. Handbook of Human Factors and Ergonomics. 2nd Ed. Wiley-Interscience Publishers

[71] Woodson, W, E. Tillman, B. Tillman, P (1992) Human Factors Design Handbook. 2nd Ed. McGraw-Hill Publishers

4.6 Other Useful References

[72] The Health and Safety (Display Screen Equipment) Regulations: 1992.

[73] BS EN ISO 13406-1:1999. Ergonomic requirements for work with visual displays based on flat panels – Introduction.

[74] BS EN ISO 13406-2:2002. Ergonomic requirements for work with visual displays based on flat panels. Ergonomic requirements for flat panel displays.

[75] BS EN ISO 11064-1:2001. Ergonomic design of control centres. Principles for the design of control centres.

[76] BS EN ISO 11064-2:2001. Ergonomic design of control centres. Principles for the arrangement of control suites.

[77] BS EN ISO 11064-3:2001. Ergonomic design of control centres. Control room layout.

[78] BS EN ISO 11690-1:1997. Acoustics. Recommended practice for the design of low-noise workplaces containing machinery. Noise control strategies

[79] BS EN ISO 11690-2:1997. Acoustics. Recommended practice for the design of low-noise workplaces containing machinery. Noise control measures

[80] BS EN 61209:1999. Maritime navigation and radio communication equipment and systems. Integrated bridge systems. Operational and performance requirements, methods of testing and required test results

[81] BS EN ISO 14738:2002. Safety of machinery. Anthropometric requirements for the design of workstations at machinery

[82] BS EN ISO 9241-5:1999. Ergonomic requirements for office work with visual display terminals. Workstation layout and postural requirements

[83] BS EN ISO 9241-2:1992. Ergonomic requirements for office work with visual display terminals. Guidance on task requirements

[84] BS EN ISO 9241-3:1992. Ergonomic requirements for office work with visual display terminals. Visual display requirements

[85] BS EN ISO 8468:1995. Ships bridge layout and associated equipment – requirements and guidelines

[86] ISO 11226:2000. Ergonomics – Evaluation of static working postures

[87] BS 7517:1995, IEC 61227:1993. Nuclear power plants. Control rooms. Operator controls

[88] BS 3044:1990. Guide to ergonomic principles in the design and selection of office furniture

[89] BS 7083:1996. Guide to the accommodation and operating environment for IT equipment

[90] Def Stan 00-25 Part 14: 2000. Human Factors for Designers of Equipment: Military Land Vehicle Design

[91] Def Stan 02-101 Part 1: 2000. Requirements for the design and fitting out of workshops, maintenance spaces and engineering stores for HM surface ships. Common requirements

[92] Def Stan 02-101 Part 2: 2000. Requirements for the design and fitting out of workshops, maintenance spaces and engineering stores for HM surface ships. Specific requirements

[93] Def Stan 02-107: 2000. Requirements for accommodation, HM surface ships

[94] Joint Service Specification Guide 2010: 2000. Crew Systems Engineering Handbook

[95] ASTM F1337-91: 2001. Standard practice for Human Engineering program requirements for ships and marine systems, equipment and facilities

[96] ASTM F1166-95a: 2000. Standard practice for Human Engineering design for marine systems, equipment and facilities

[97] STANAG 3705 AI. Human Engineering design criteria for aircrew station controls and displays

[98] STANAG 3994 AI. Application of Human Engineering to Advanced Aircrew Systems

[99] ANEP 26 (NATO MAS), Edition 1. Ergonomic data for shipboard space design in NATO surface ships

[100] ANEP 27 (NATO MAS), Edition 1. Human Factors guidelines for the design of MMIs in Operational Rooms

[101] STGP 11, STG 2002 ISSUE 3. HFI Technical Guide

[102] Mil-Std-1472F: 1999. US DoD Design Criteria Standard – Human Engineering

[103] Mil-Hdbk-759C: 1995. US DoD Handbook for Human Engineering design guidelines

[104] NASA-STD-3000: 1995. Man-Systems Integration Standards Volumes 1 and 2

[105] IEEE Guide for the application of human factors engineering to systems, equipment and facilities of nuclear power generating stations

5 Lighting [HFE4]

This technical area is concerned with supporting vision through lighting and luminance of the workspace and tasks. The concerns are the provision of adequate lighting and illumination with regard to distinguishing visual display colours, minimising reflection and glare effects for Land and Sea domains.

The extent to which lighting and luminance affect performance depends on the visual demands of the task. In brief, the finer the degree of visual discrimination required for a task the more light is required. The goal is to provide support in the design of internal and external lighting that is visually comfortable and reduces visual workload to ensure safety, visual comfort and maintain levels of task performance.

There is considerable overlap with other technical areas, especially within the human factors engineering domain. Specifically, this Section overlaps with the following:

a. Workspace Design [HFE3]
b. Human Computer Interface/Interaction [HFE5]
c. Information Displays [HFE8]

This Section was created in August 1986 and edited in August 2003.

5.1 Introduction

The aim of this Part of the Defence Standard is to guide and direct designers' attention to factors that contribute to seeing efficiently and to provide a context for a better understanding of user problems related to visual work and comfort. It will be necessary to consult other sources for more detailed information since lighting is a vast subject and only guidelines are presented here. Further references are presented in the References section which can be consulted for more in-depth information.

At the present time, there is no analytical model available that will consistently predict the complex interactions between lighting design and human vision. This means that the only way to determine the effectiveness of a system is to test it with observers in tasks and conditions equivalent to the operational environment. This document provides guidance to help design usable working environments, but they do not guarantee ease of use.

This technical area places emphasis on problems associated with glare (brightness contrast intrusion upon the visual field from light fittings, reflections and bright daylight through windows), and stripes and flicker (visual cortex is over stimulated creating an illusion where lines seem to shimmer). Finally, eye strain due to performing visual tasks for long periods of time under unsatisfactory viewing conditions.

5.2 Scope

This Part should be used by designers to develop workstations and working environments that are visually comfortable and reduce visual workload. The majority of recommendations cover conventional visual displays seen with normal vision, but head-up displays and night vision goggles are referred to where necessary.

5.3 Technical Guidance

5.3.1 Photometry and Colorimetry

Photometry and colorimetry provide ways to measure luminance and colour respectively. The energy output of a light source is referred to as its 'luminous intensity' and is measured in candela (one candela is the output of a candle). The amount of light energy that falls upon a surface is referred to as its luminance and is measured in lux (one candle at a distance of one metre).

The information in this section provides an overview of the general principles behind photometry and colorimetry. This information is necessary to implement some of the guidance in parts HFE4 and HFE8. Further guidance can be found in Reference [155]. Photometry and colorimetry provide the tools necessary to evaluate workstations and

working environments to ensure that they are visually comfortable and reduce visual workload. These tools are indispensable when colour coding information on displays, reproducing colours accurately and evaluating workplace lighting. Photometric and colorimetric principles must be applied to achieve some of the recommendations in parts HFE4 and HFE8.

5.3.1.1 Basic Principles of Photometry

Photometry is the process where instruments are used to measure the luminous intensity of a light source or a surface, by comparing it with a standard source. The comparison can be done either with the human eye or with a photoelectric cell. The basic terms to be understood are shown in Figure 5.3:1 below. More formal definitions of these terms are provided in the Definitions section.

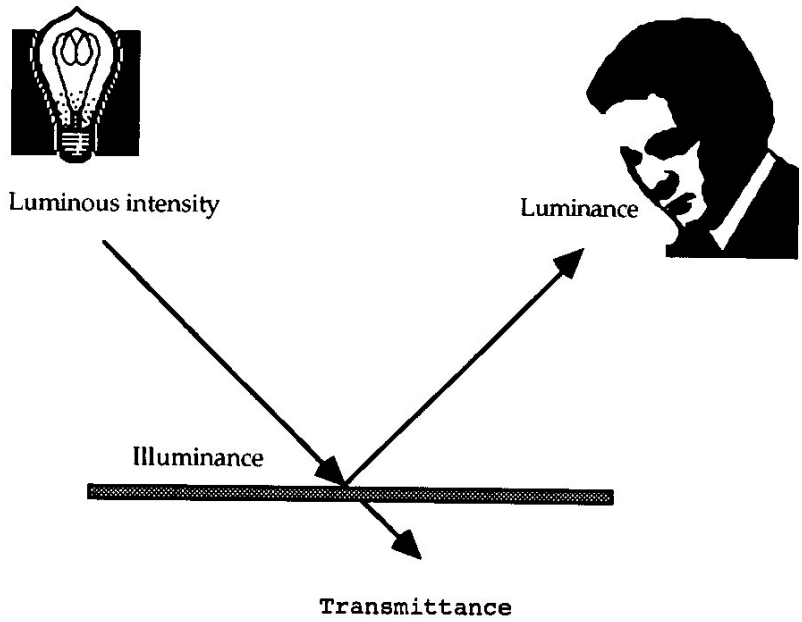

Figure 5.3:1: Illustration of Basic Light Concepts

5.3.1.2 Photometry: A Practical Guide

Illuminance is the luminous flux density at a surface, i.e. the luminous flux incident per unit area.

Luminance is the physical measure of the stimulus which produces the sensation of brightness measured by the luminous intensity of the light emitted or reflected in a given direction from a surface element, divided by the projected area of the element in the same direction. The SI unit of luminance is the candela per square metre. The relationship between luminance and illuminance is given by the equation:

$$\frac{\text{Illuminance x Reflectance factor}}{\Pi}$$

Illuminance levels should be measured in the field, for two reasons. First, to check that an installation has met its design specification. Second, to examine the illuminance levels in an area where complaints about the lighting are occurring. There are several points to note when measuring illuminance levels in a field survey.

Before taking lighting measurements in an area, it is necessary to stabilize the performance of the lamps and luminaires. Depending on the lighting installation, a certain amount of run-up time is required to achieve full light output, for example, discharge lamps take at least 20 minutes to achieve full light output. Ideally, the lights should be on for one hour before measurements are taken.

The photocell of the illuminance meter should be exposed to the levels to be measured for about five minutes before taking the first measurements.
The illuminance meter should be calibrated regularly and the zero reading should be checked and adjusted as necessary.

When measurements of the electric lighting installation only are required, daylight must be excluded from the area, or the survey carried out after dark.

Measurement of illuminance should be taken at working positions on the principal horizontal, vertical or inclined planes on which the tasks are performed. If there are no principal planes, a standard horizontal height of 0.7 m for seated tasks and 0.85 m for standing tasks should be used. The floor can be taken as the working plane if movement is the only activity carried out in the area.

The measurer must ensure that their shadow does not fall on the photocell while measurements are being recorded.

Both the average illuminance and the minimum illuminance in the space should be determined.

Two methods of measurement of average illuminance and illuminance variation are recommended: the full grid of measurement points; and the two-line method of average illuminance. Details of these techniques are described and illustrated in the Chartered Institution of Building Service Engineers. (CIBSE) Code for Interior Lighting 1994.

5.3.1.3 Basic Principles of Colorimetry

Colorimetry is the science of measuring colour, so that colours can be given numbers or labels and can be communicated and reproduced. This standard briefly reviews two methods: colour order systems and the CIE system (Commission International de l'Eclairage). Colour order systems provide a basic overview of colour; the CIE system is needed for more formal specification of colour, especially in the areas of colour coding and colour reproduction.

5.3.1.4 Colour Order Systems

There are a number of colour order systems in general use, including the Munsell Book of Colour, the Optical Society of America Uniform Colour Scales and the Swedish Natural Colour System. A colour order system can be regarded as a subset of the thousands or millions of possible colour perceptions. It samples the world of colour according to three basic perceptual colour attributes that constitute the coordinate axes of the colour system. These three attributes are:

a. Hue, the term that most closely resembles our notion of 'colour', for example, red, green and blue. It is that quality of a colour that cannot be accounted for by

brightness or saturation differences. An objective measure of hue is provided by the dominant wavelength of that colour's spectral power distribution.

b. Saturation, the quality that distinguishes a hue from white. Pastel shades are de-saturated, vivid colours are saturated. An objective measure of saturation is purity.

c. Lightness, the perceived brightness of the colour. A (very approximate) objective measure of lightness is luminance.

5.3.1.5 The CIE System

The most widespread method of colour specification is the CIE 1931 XYZ system. There are a number of colorimeters that conveniently allow you to measure the CIE co-ordinates of display phosphors, and most display manufacturers will supply the CIE coordinates of their monitors on request. Calibration of visual displays is usually carried out in the CIE (XYZ) system. For colour modelling purposes (e.g. colour coding) the CIE LUV system should be used. This is described in detail in Part 25.

5.3.1.6 Colorimetric Measurement: A Practical Guide

In order to perform colour space manipulation of the type described above, the chromaticity co-ordinates of the visual display need to be specified in CIE 1931 XYZ coordinates. Manufacturers of high quality displays usually include these data with the technical specifications; but chromaticities may change with time and spatial location on the screen so when accurate colour specification is important (for example when colour coding a safety-critical system), it is preferable to measure these coordinates with a colorimeter.

Colorimeters filter light with three filters whose spectral transmittance approximates the CIE 1931 XYZ colour matching functions. There are a number of devices available but they are expensive, and hand-held ones may not be accurate. All devices operate in essentially the same way: the operator simply points the colorimeter at the screen, presses the button or runs a computer program, and reads off the chromaticity coordinates.

However, a warning is necessary. The colorimetry of visual displays poses special problems and suffer from difficulties in measurement. Reference should be made to the Reference [135], [136] and [137].

5.3.1.7 Recommendations

For critical applications, ensure that displays remain in specification by regular and frequent calibration to the CIE(XYZ) standard.

Use the CIELUV colour space to derive a palette of colours that are perceptually equally spaced.

Use the ΔE_v metric (the total colour difference) to derive a set of colours that are maximally discriminable from each other. For an algorithm see Reference [149]. For tasks involving colour discrimination, ΔE_v has been shown to be an effective predictor of performance and ΔE_v can be used to maximize the perceptual differences among colours.

However, some problems still exist with this measure and it is impossible to specify a satisfactory minimum acceptable colour difference at this time. No one colour difference measure that is currently available will give an accurate measure for all tasks involving the use of colour.

For symbol legibility use the ΔE_{Yuv} legibility measure.

5.3.2 Lighting Design Practice and Application

In this section a background to the factors which are important in lighting design practice and application is provided. Consideration is also given to lighting design practice for a number of special lighting conditions. Guidelines and recommendations for lighting design are presented at the end of each section.

5.3.2.1 Code of Practice & Good Practice

The main British Code of Practice on lighting is published by the Lighting Division of the CIBSE. The CIBSE Code for Interior Lighting (1994) gives more detailed guidance than is covered in this Standard, and should be consulted for further information on:

a. the effect of lighting conditions on the performance of tasks in a wide range of interiors;
b. the appearance of an interior;
c. general and specific lighting design criteria for a range of interior and exterior applications;
d. the cost-effective use of energy.

General guidance on lighting at work can also be found in HSG38.

5.3.2.2 Main Requirements of Lighting Design

Lighting design in both interior and exterior environments should facilitate three main functions:

a. Task performance, by providing enough light to make details of the task easy to see and to ensure high levels of speed and accuracy.
b. Safety, by allowing people enough light to see hazards or potential hazards.
c. Visual comfort, by making the appearance of the lit space match the requirements of the visual system for comfort and effectiveness.

These requirements are considered in the following sections.

5.3.2.3 Task Performance

The description of task performance in the following paragraphs, assumes that the major part of the task under consideration is visual, and that the visual part of the task has the greatest effect on performance. For example, map-reading is clearly a predominantly visual task, which will require adequate lighting levels to perform satisfactorily, but telephone or radio communication, equally clearly, is not a predominantly visual task, and performance is unlikely to be affected by increasing illumination levels.

The illuminance needed for a task depends on how much detail needs to be seen. For task performance, planar illuminance is most commonly used metric for design, and relates to the plane in which the task takes place, be it horizontal, vertical or inclined. Many tasks take place in a horizontal plane. The light levels falling on the plane in which the task takes place should be adequate for the type of task, and extreme variation in illuminance across the task should be avoided. In military applications, e.g. control panels, aircraft cockpits, the working plane is often vertical or inclined. Potential differences in the inclination of the working plane should be taken into account when designing lighting by testing the tasks on mock-ups of the arrangement with different lighting configurations to ensure that the illuminance is appropriate for those tasks.

The ability of the eye to discern detail in a task is determined primarily by the size of the detail, contrast between background and foreground and the state of the viewer's vision. Lighting can make a considerable contribution to improved visual performance and affects task performance as follows:

Increasing the illuminance on the working plane of the task increases performance, but follows a law of diminishing returns until reaching a 'saturation level' where performance reaches a plateau.

The illuminance level at which performance levels off is inversely related to the size of the detail and the contrast in the task, i.e. the smaller the size and the lower the contrast, the higher will be the saturation level. It is not possible, however, to make the performance of a difficult visual task match that of an easy visual task merely by increasing the illuminance levels on the task.

A useful lighting design aid is provided in Table 5.3:1 and Table 5.3:2. Table 5.3:1gives examples of tasks/interiors appropriate for each maintained illuminance. It is used in conjunction with modifying factors given in Table 5.3:2 (Design Maintained Illuminance Flow Chart) to obtain the design maintained illuminance allowing for departure from typical conditions. The modifying factors are:

a. the visual demands of the task;
b. the duration of the work;
c. the consequences of errors.

STANDARD MAINTAINED ILLUMINANCE (LUX)	CHARACTERISTICS OF ACTIVITY/INTERIOR	REPRESENTATIVE ACTIVITIES/INTERIORS
50	Interiors used rarely with visual tasks confined to movement and casual seeing without perception of detail.	Cable tunnels, indoor storage tanks, walkways.
100	Interiors used occasionally with visual tasks confined to movement and casual seeing calling for only limited perception of detail.	Corridors, changing rooms, bulk stores, auditoria.
150	Interiors used occasionally or with visual tasks not requiring perception of detail but involving some risk to people, plant or product.	Loading bays, medical stores, plant rooms.
200	Interiors occupied for long periods, or for visual tasks requiring some perception of detail.	Foyers and entrances, monitoring automatic processes, casting concrete, turbine halls, dining rooms.
300	Interiors occupied for long periods, or when visual tasks are moderately easy, i.e. large details (greater than 10 min arc) and/or high contrast.	Libraries, sports and assembly halls, teaching spaces, lecture theatres, packing
500	Visual tasks moderately difficult, i.e. details to be seen are of moderate size (5-10 min arc) and may be of low contrast; also colour judgements may be required.	General offices, engine assembly, painting and spraying, kitchens, laboratories, retail shops.
(1)750	Visual tasks difficult, i.e. details to be seen are small (3-5 min arc) and of low contrast; also good colour judgements or the creation of a well lit, inviting interior may be required.	Drawing offices, ceramic decoration, meat inspection, and chain stores.
1000	Visual tasks very difficult, i.e. details to be seen are very small (2-3 min arc) and can be of very low contrast; also accurate colour judgements or the creation of a well lit, inviting interior may be required.	General inspection, electronic assembly, gauge and tool rooms, retouching paint work, cabinet making, supermarkets.
1500	Visual tasks extremely difficult, i.e. details to be seen extremely small (1-2 min arc) and of low contrast; optical aids and local lighting may be of advantage.	Fine work and inspection, hand tailoring, precision assembly.

STANDARD MAINTAINED ILLUMINANCE (LUX)	CHARACTERISTICS OF ACTIVITY/INTERIOR	REPRESENTATIVE ACTIVITIES/INTERIORS
2000	Visual tasks exceptionally difficult, i.e. details to be seen exceptionally small (less than 1 min arc) with very low contrasts, optical aids and local lighting will be of advantage.	Assembly of minute mechanisms, finished fabric inspection.
2000 - 7500	Very prolonged exacting visual tasks	Electronic or watch assemble
5000 - 10 000	Exceptional exacting visual tasks	Micro-electronic assembly
10 000 - 20 000	Very special visual tasks	Surgical operations

Table 5.3:1: Example of Activities/Interiors Appropriate for Each Maintained Illuminance

Standard maintained illuminance (lux)	Task Size and Contrast		Task Duration		Error Risk	Design maintained illuminance (lux)
	Are task details unusually difficult to see?	Are task details unusually easy to see?	Is task undertaken for unusually long time?	Is task undertaken for unusually short time?	Do errors have unusually serious consequences for people, plant or product?	

Table 5.3:2: Maintained Illuminance Flow Chart

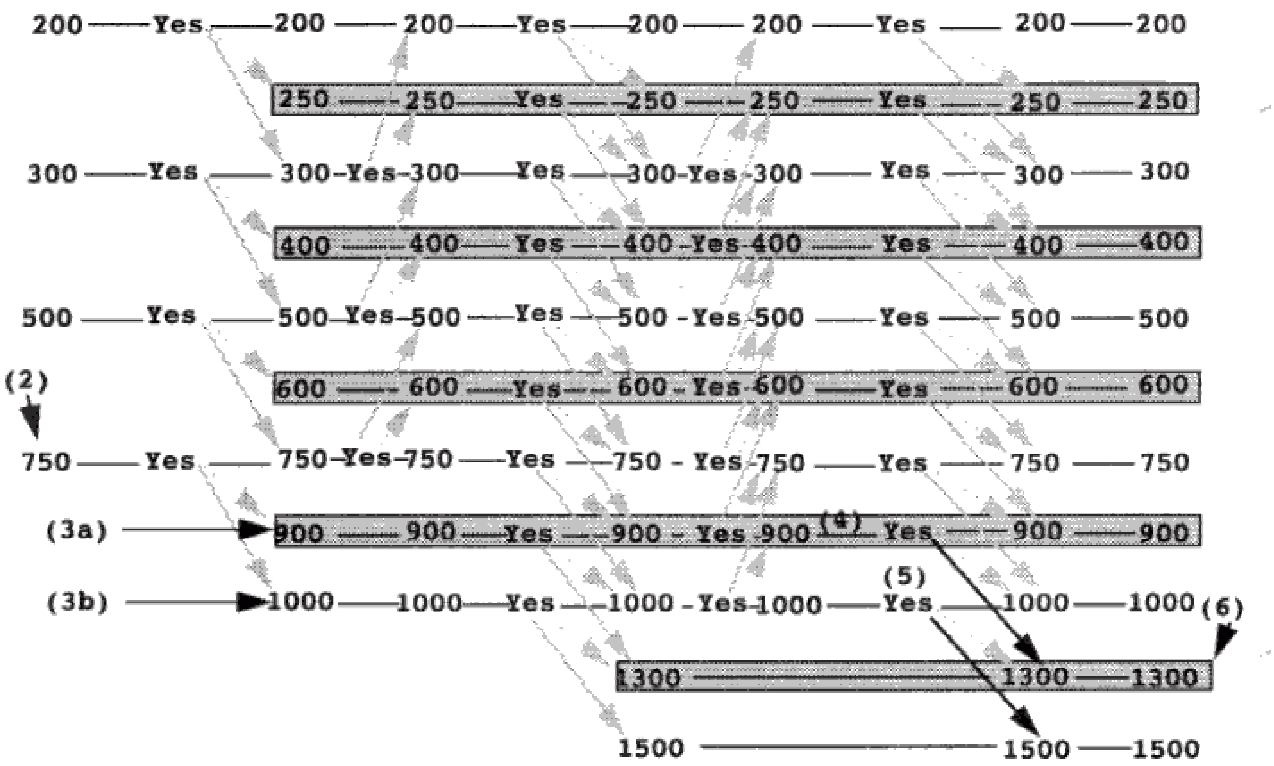
200 Yes 200 200 Yes 200 200 Yes 200 200
250 250 Yes 250 250 Yes 250 250
300 Yes 300 Yes 300 Yes 300 Yes 300 Yes 300 300
400 400 Yes 400 Yes 400 Yes 400 400
500 Yes 500 Yes 500 Yes 500 Yes 500 Yes 500 500
(2)
600 600 Yes 600 Yes 600 Yes 600 600
750 Yes 750 Yes 750 Yes 750 Yes 750 Yes 750 750
(3a)
900 900 Yes 900 Yes 900 (4) Yes 900 900
(5)
(3b)
1000 1000 Yes 1000 Yes 1000 Yes 1000 1000 (6)
1300 1300 1300
1500 1500 1500

Worked Example

An example of using these tables for lighting design is shown below:
You wish to design an interior lighting scheme in an area where the tasks will be the assembly of electronic secure systems for aircraft communication on a day shift of seven hours. The detail on many of the components is small (3-5 min arc). Errors in assembly may have fatal consequences for pilots.

Looking at Table 5.3:1, you would select 750 lux as the standard maintained illuminance for the visual task (1). You would then examine Table 5.3:2 in the light of your modifying factors. Starting on the left-hand side with your standard maintained illuminance of 750 lux (2), consider the first two choices, task size and contrast. One or two details of your assembly task are low contrast, so you follow the dashed arrow to 900 lux. Then consider task duration. The task is not undertaken for unusually long or short times, so follow the 900 lux line through to the third factor, errors (4). You are aware that errors may have fatal consequences for pilots and their aircraft, so you follow the bold arrow, to 1300 lux (5). Your design maintained illuminance is therefore 1300 lux (6).

The CIBSE Code for Interior Lighting 1994 goes further than the general maintained illuminance guidelines described in the previous tables and example. It provides recommendations on the maintained illuminance and limiting glare index for a wide range of interiors and activities. These recommendations are derived from research, workplace legislation, other CIBSE guides for certain industries, and British, and European and International standards. For example, they provide specific recommendations for lighting applications which are likely to be represented in MOD installations such as appliance servicing, cold stores, computer workstations, control rooms, machine shops, plant rooms, residential buildings and workshops. For detailed information on the specifics of lighting such areas, the CIBSE Code should be consulted.

5.3.2.4 Safety

Good lighting has an important role to play in promoting health and safety at work. Generally, safety is influenced by lighting in that the more quickly and easily a hazard can be seen and identified, the more easily it can be dealt with or avoided. In working and circulation areas, people must be able to see to move about without tripping, falling or walking into obstacles. The type and levels of lighting needed for safety depend primarily on the type of work being carried out, and the hazards associated with it.

The illuminance produced by lighting installation is usually non-uniform. Using average illuminances can result in the presence of some areas in the environment having much lower illuminance which could lead to health and safety hazards, as well as visual discomfort. Health and safety texts state a ‘minimum measured illuminance’ for any position within an environment. This is the lowest illuminance permitted in the work area. Visual discomfort can be caused by sharp contrasts between the task and surrounding areas. The difference in illuminance between one area and another is known as an illuminance ratio. Recommendations on illuminance ratios are provided at the end of this section.

5.3.2.5 Visual Discomfort

Appropriate lighting for a task and its environment can reduce the likelihood of various forms of visual fatigue and discomfort.

Common symptoms of visual discomfort include:

a. soreness, dryness, irritation or inflammation of the eyes and eyelids;

b. adverse visual symptoms such as blurred or double vision, and difficulty in focusing on the details of the task;

c. indirect symptoms such as headaches, neck aches, fatigue and backache, for example, users of display screen equipment (DSE) may adopt awkward postures to avoid the effects of reflections on their screens, thus causing back or neck ache.

Poor lighting is not the only cause of visual discomfort, for example, doing any visual task which causes the visual system to work at the limits of its capabilities for long periods of time is likely to result in visual discomfort. Poorly corrected vision can also be a cause of discomfort in tasks where the primary activity is visual, for example intensive DSE use.

Glare occurs as a result of bright sources of illumination in a less bright field of view to which the visual system is adapted, for example car headlights on full beam at night.

Disability glare occurs when there is a direct effect preventing the visual system from operating.

Discomfort glare occurs when the effect of the glare is to cause distraction, annoyance or visual strain.

The psychological effects of lighting have also been linked to reports of what has become known as ‘sick building syndrome’. Office workers in certain buildings have complained of general discomfort and symptoms such as lethargy, flu-like symptoms, dry throat/eyes, headaches etc. In general, the best ‘healthy’ buildings have mechanical or natural ventilation, openable windows, and untinted glazing on the windows. By comparison, the least healthy buildings have air conditioning, no openable windows, and all had tinted windows. Reference [150] examines the evidence for sick building syndrome in relation to lighting and health.

5.3.2.6 Heath Hazards of Light

There are also more serious effects of light. Very high lighting levels, and certain wavelengths of light, e.g. ultraviolet light or high energy laser beams, can also cause tissue damage or specific sight damage. There are two main ways in which light radiation can cause damage:

a. The radiation causes a chemical reaction in the affected tissue, for example, short wavelength radiation can be absorbed by the eye, causing the cornea and conjunctiva to become inflamed, as in snow-blindness.

b. The radiation heats or burns exposed tissue, for example, sunburn is caused by prolonged exposure to longer wavelength ultraviolet radiation.

c. The light sources found in most work situations are unlikely to cause radiation damage. However, there are certain circumstances that may be hazardous, for example:

d. High-pressure mercury discharge lamps. These are used in interior and exterior environments for floodlighting, display lighting and street lighting. If faulty, harmful levels of ultraviolet radiation may be emitted. Fluorescent versions of this type of lamp present the same hazard.

e. Tungsten halogen lamps. These are used in interior and exterior environments for floodlighting and studio lighting. Under normal operating conditions they are protected by protective filters. However, they can emit significant amounts of ultraviolet radiation when they are being maintained, or if the protective filters are removed or damaged.

5.3.2.7 Glare

Glare is the discomfort or impairment of vision experienced when parts of the visual field are excessively bright in relation to the general surroundings. Two aspects of glare are acknowledged and they are referred to as disability glare and discomfort glare.

5.3.2.8 Disability Glare

Disability glare (dazzle) is glare which impairs the ability to see detail without necessarily causing visual discomfort. The lights of the headlight of a car on an unlit street at night can cause disability glare. Other situations such as strong daylight seen through a window and shining directly into the eyes or specular reflections from glossy surfaces such as dials and metallic surfaces are further examples of disability glare. The effects vary from causing a reduction in the contrast of objects in the field of view to a total inability to see while the glare source is present. The formula for measuring disability glare is presented in Part 25.

5.3.2.9 Disability Glare and Contrast Sensitivity

Disability glare frequently reduces contrast sensitivity and the effect on a static target may be measured in terms of effective contrast (see Definitions).

The glare effect is caused by excessive scattering of light over the task and within the eye, the latter creating a light veil over the retina. Increasing sensitivity to disability glare occurs as a person gets older, and the effects are particularly noticeable in people above 40 years. How much a person is affected by disability glare conditions depends on any opacity in the lens as well as scattering of light within the eye.

5.3.2.10 Discomfort Glare

Discomfort glare is glare which causes visual discomfort without necessarily impairing the ability to see detail. The effect is assessed subjectively and in the UK the subjective scales used by CIBSE are shown in Table 5.3:3:

GLARE SENSATION	GLARE INDEX
Just intolerable glare	28
	25
Just uncomfortable glare	22
	19
Just unacceptable glare	16
	13
Just perceptible glare	10

Table 5.3:3: The Glare Index Rating Scale

The ratings shown in the table are related to certain physical properties of glare situations. The relationship is expressed by the glare index formula which is presented in Part 25.

5.3.2.11 General Guidance

The following are recommendations to reduce glare in the working environment (for more details see Pheasant (1991)):

a. Maintain uniformity of illumination within a working area.

b. The contrast ratio between the luminance of adjacent areas close to centre of the visual field and its immediate surroundings should not exceed 3:1.

c. The contrast ratio between the centre of the visual field and peripheral vision should not exceed 10:1.

d. Where illumination on a visual task is set to 100% luminance on walls should be 50-80%, on ceilings 30-90% and on the floor 20-30% (BS 8206).

e. Light sources should not be placed within 60 degrees of working line of sight, or 30 degrees of the horizontal line of sight when the eyes are in the working position.

f. Fluorescent tubes should be mounted at right angles to the line of sight. Window surfaces should be parallel to the line of sight (especially important for VDU work).

g. Avoid reflecting surfaces, especially near the centre of the visual field.

5.3.2.12 Flicker

Flicker is a source of both discomfort and distraction and may even cause epileptic seizures in some people. The perceptibility of flicker is influenced by the frequency and amplitude of the modulation and the area of vision over which it occurs. Large amplitude variations over large areas at low frequencies are the most uncomfortable conditions.

The major sources of flicker in fluorescent lamps are as follows:

a. 100 Hz whole tube flicker (from a 50 Hz electrical supply). This is not usually perceived but some individuals will be sensitive especially in conditions of a large field of view with high surface luminances such as a drawing board.

b. 50 Hz fluctuation from the end of lamps due to cathode glow which alternates every half cycle.

c. 50 Hz whole tube flicker, arising due to unequal emissions from electrodes. As a tube ages this fluctuation increases in amplitude.

Flicker from fluorescent lamps can, where necessary, be reduced by one of the following methods:

d. changing ageing lamps;
e. using high frequency ballasts;
f. using lamps fitted with shielded electrodes;
g. screening the ends of the lamps.

5.3.2.13 Recommendations

Carry out user trials on mock-ups of working plane and lighting arrangements. This is particularly important when the tasks are to be carried out at an inclined surface.

Use the standard maintained illuminances in Table 5.3:1 in conjunction with the modifying factors in Table 5.3:2 to select a design maintained illuminance for the tasks.

Provide appropriate (i.e. the design maintained illuminance) levels of illuminance for the task. Levels of illuminance on the task which are too low or too high for the size of detail or contrast of the task may cause the operating mechanisms of the eye to operate at their limits, causing visual fatigue.

Prevent glare and reflections wherever possible. Disability glare directly affects the visual system, causing discomfort for the viewer as the bright area falls within their field of view. Reflections can obscure parts of the task which are necessary for effective performance, and often result in referred discomfort such as headaches or postural discomfort. In interior environments, glare is most often caused by sunlight or improperly diffused artificial lighting.

Prevent flicker wherever possible. Flicker (for example, from artificial lighting or reflected movement) may cause discomfort, and usually causes distraction from the task at hand.

Avoid wide variations in illuminance across the working plane. If two or more parts of the task have very different illuminances, the visual system is forced to adapt continually between the different levels, which can lead to visual fatigue and discomfort. Large differences of illumination or contrast in the user's environment have a similar effect, for example, a daylight window directly behind a display screen can cause discomfort as the visual system adapts between the two. For interior environments, illuminance ratios no greater than 5:1 should be used. To illustrate, in an office where the task illuminance is 500 lux, the minimum illuminance in adjacent areas should be no less than 100 lux.

Aim for illuminance ratios for task-to-immediate surround of 3:1, and task to general background 10:1. Task performance is reduced and concentration is more difficult to maintain if the task illuminance is lower than the immediate surround.

5.3.2.14 Interior and Exterior Lighting Design

In the following section, some general factors are considered, namely daylight, reflectances and illumination ratios which affect lighting design for both interior and exterior environments. Secondly, factors specific to interior and exterior environments are examined separately.

5.3.2.15 Daylight

Daylight is a major factor in task performance and visual comfort for people in both interior and exterior environments. Unless the function of an interior environment makes it impractical, for example, in secure control rooms, people will prefer to work in a room which has both daylight and a view to the outside. In terms of energy usage, the integration of daylight with electric lighting and good lighting controls can lead to significant savings in the primary energy used by a building.

A window or roof light can provide three functions which maximize people's visual comfort and promote energy saving, namely a view, illumination for task performance, and an increase in the general brightness of a room. However, care should be taken during the design to ensure that the use of daylight does not cause discomfort through glare or heat gains for other users of an interior space.

Daylight has some important characteristics which are relevant to lighting design in exterior and interior environments.

a. The illuminance provided by daylight fluctuates with variations in the time of day, time of year, geographical location, and the weather. Therefore a constant task illuminance cannot be maintained, making it necessary to supplement day lighting with electric lighting.

b. Daylight is useful for tasks where good colour rendering is important.

c. Daylight can be a cause of both direct and reflected glare, both of which can cause visual discomfort and can affect the performance of a task.

As most people prefer to work in natural daylight it is important to make full use of it wherever possible. The Workplace (Health, Safety and Welfare) Regulations 1992 state that every workplace shall have suitable and sufficient lighting, and, so far as is reasonably practicable, lighting should be by natural light. In most circumstances suitable and sufficient lighting for both interior and exterior environments can be provided by a combination of natural and artificial lighting.

Innovative day lighting systems are designed to even out the effects of uneven day lighting, particularly where the backs of rooms are gloomy, and the perimeter very bright. Innovative day lighting systems may be of particular benefit where there are significant external obstructions. These systems improve the effectiveness of natural light as a source of illumination for building interiors. This leads to potential energy savings and the quality of lighting is improved by reducing window glare.

A review of innovative day lighting systems and evaluation methods is presented in Reference [134]. This covers light shelves, light pipes, holographic diffracting systems, prismatic glazing, adjustable mirrored louvres and prismatic film.

5.3.2.16 Reflectances

For interior environments, the reflectance and finish of the main surfaces, ceiling, walls and floor, play an important part in the use of the light. The reflectance of a room surface is the ratio of the light reflected from a surface to the light falling upon it. Matt finishes on all of these surfaces are recommended to prevent reflections and to disguise surface imperfections.

In general, the reflectance of the surface finish of the ceiling should be around 0.8. Wall surfaces surrounding windows should have a reflectance of at least 0.6 in order to minimize the contrast between the bright window and the surrounding surfaces. The ratio between the average illuminance of a wall (or partition surface) to the average illuminance on a horizontal working plane should be within the range 0.5 to 0.8. To achieve this, (non window) wall reflectances should be between 0.32 and 0.7. Floor cavity reflectances should not fall below 0.2 or exceed 0.4, although in practice, in heavily industrial or obstructed areas, a minimum of 0.1 for the former figure is more realistically achievable. For occupied interior spaces, with office equipment or machinery in place, low reflectance work surfaces should be avoided as they have a major effect on the floor cavity reflectance as well as the possibility of producing visual discomfort caused by sharp contrasts between the task and its immediate surround.

5.3.2.17 Illuminance Ratios

Safety can be compromised in interior and exterior environments where there are large differences in illuminance between the lighting of the task area, and adjacent areas. Visual discomfort can be caused by sharp contrasts between the task and surrounding areas.

For interior environments, illuminance ratios no greater than 5:1 should be used. To illustrate, in an office where the task illuminance is 500 lux, the minimum illuminance in adjacent areas should be no less than 100 lux. Suggested targets for task-to-immediate surround are 3:1, and task to general background 10:1. Task performance is reduced and concentration is more difficult to maintain if the task illuminance is lower than the immediate surround.

For exterior environments, illuminance ratios of no greater than 10:1 should be used. Where there is movement between interior and exterior working areas, for example a storage area inside and a loading bay outside (exposing the person to a sudden change in illuminance), the maximum ratio should be 10:1. If these ratios between an interior and exterior environment cannot be achieved, a transition zone (lit to a level approximately half-way between the two) should be provided between the two adjacent areas.

5.3.2.18 Interior Environments

There are three general categories of interior lighting used in workplaces, which should be dependent on the nature of the tasks carried out in the area:

a. General background lighting, which provides uniform illumination over the whole working and surrounding area.

b. Localized lighting, which provides levels of illumination appropriate for different types of task in the same area, for example, map/chart reading tasks will require higher localized lighting than display monitoring tasks, but both are often carried out in the same area.

c. Local, or task lighting, which is required either when a high level of illuminance is needed in a small area, for example, when flexible directional lighting is required during intricate assembly or repair tasks; or where general overhead lighting is impossible or unnecessary to install because of characteristics of the work area.

In many interior working environments where tasks are carried out (as opposed to display or rest areas), a regular array of light fittings is used to provide the general and localized lighting. The spacing between fittings is critical, and manufacturers publish maximum spacing-to-mounting height ratios for each fitting. If these maxima are exceeded, there will be excessive variation in illuminance across the working place, which is likely to lead to visual discomfort, and in extreme cases, risks to health and safety.

In planning the lighting array for an interior environment, it is necessary to consider the eventual use of the space. For example, in an armaments storage warehouse with regularly arranged stacks or shelving, the spacing between the luminaires should match the spacing of the obstruction.

Where linear fittings are to be used for background or localized lighting, the orientation of the fitting is important. Linear fittings cause less glare if they are viewed end on rather than sideways on. Thus a regular array of fittings should be oriented so that they are end on to the viewing direction with the longest dimension.

People generally prefer lighting system which possess a degree of up lighting as well as down lighting. An evaluation of different lighting combinations is referred to in Part 25. This study showed a strong preference for the environment with higher average room surface luminances, particularly on the ceilings.

The finer degree of visual discrimination required to perform tasks the more light is needed. The ratio between the minimal and optimal illumination required to perform a task is 1:30 within this range, as levels of light increase so do comfort and performance. Illumination levels for general office tasks are in the range of 500-700 lux, for VDU work the range is 300-500 lux (HSE 1983). Excessive light causes glare and reflection, in VDU offices up lighting reduces reflections from display screens. Access to daylight is highly valued, as is a good view from the window which relaxes the eye.

5.3.2.19 Exterior Environments

The type of lighting installation for an exterior environment depends on the type of activity carried out in the space, and the size of the area to be covered. In general, exterior lighting installations should achieve a reasonably uniform illuminance on all relevant working areas, and avoid glare to the users of those areas, and people working in nearby areas. The lighting should be planned to optimize the use of exterior facilities while minimizing energy consumption. Usually, security and safety during the hours of darkness are the primary functional needs associated with most exterior lighting applications.

Exterior lighting can be classified into static or movable systems:

a. Static. All luminaires are non-adjustable on their support and each is directed towards a single fixed point, for example roadway and pedestrian luminaires.

b. Movable. Luminaires are adjustable on their supports and can be directed at different areas of the exterior environment, either manually or by remote control, e.g. floodlighting equipment.

Lighting equipment which is used outside should be protected against weather, accidental or deliberate damage and corrosion. Manufacturers of outdoor lighting equipment specify the planes in which they are intended to be mounted. If there is a high risk of deliberate damage or unauthorized access to an area, higher illuminance values should be used.

The next few sections provide lighting design principles for the most commonly encountered types of exterior environment.

5.3.2.20 Lighting Large Areas

The type of lighting used will depend on the likely degree of obstruction in the area, and whether lighting is required primarily on the horizontal or vertical planes. If the horizontal plane is more critical, and if there is likely to be obstruction, the lighting should have a predominantly downward distribution. If vertical illuminance is more important, floodlights can be used, provided glare for the users of the space is avoided.

In large area exterior environments, lights are usually mounted on poles or plinths of varying heights. The spacing between the poles should ensure that excessive variation in illuminances is avoided.

5.3.2.21 Entrance Areas and Building Periphery

All fittings for entrance and building periphery areas should be chosen and mounted so as to avoid glare for those entering and leaving the building. Generally, wall, pole or bollard mounted fittings are used for entrance areas and wall-mounted fittings for the periphery of buildings. The spacing of the fittings should prevent excessive illuminance variation which may cause a safety or security risk.

5.3.2.22 Perimeter Lighting

This is usually for illuminating a fence line, enclosing wall or boundary. Commonly, the luminaires face outwards and are arranged to cause glare for any intruders. Typically, the array will be located 3-5 m from the fence. Apart from dazzling intruders, the objective is to ensure that the main flow of light is projected parallel to the ground to obtain the maximum revealing effect.

5.3.2.23 Searchlights

There are two main uses for searchlights:

a. signal lights that are to be seen;
b. sources of illumination by which distant targets are to be seen.

When considering the design of tasks for which searchlights will be used, several factors need to be taken into account, including the peak intensity of the searchlight, atmospheric transmittance, the size, shape and location of the target, the distance between the target and its background, the reflectance of the background, and the lateral offset distance of the observer from the searchlight.

5.3.2.24 Checkpoint Lighting

Checkpoint lighting enables people and vehicles to be checked at a point of entry or egress to an installation. General lighting within the checkpoint accommodation should be sufficient for movement within the accommodation. The lighting objective is to keep the security personnel's dark adaptation level as high as possible. This enables them to keep observation on the lighted area outside and to make minimum adaptation adjustment when stepping outside. Sufficient light may, for example, be provided by spill-light from a desk lamp giving a maximum of 300 lux on the desktop. Any illumination in the checkpoint accommodation should be dimmable down to near blackout.

5.3.2.25 Roads

Lighting for road surfaces should enable vehicles and objects to appear in silhouette. The current roadway lighting standard uses horizontal luminance and uniformity of illumination as the primary design criteria. BS 5489, Code of Practice for Road Lighting, gives advice on suitable layouts.

5.3.2.26 Temporary Sites

Many exterior military workplaces have temporary lighting installations. The lighting objectives, i.e. avoidance of glare and excessive variation in illuminances, are the same.

Further details of lighting design for exterior environments, e.g. roadways, building and security floodlighting can be found in Reference [126]. Further information for lighting in Hostile and Hazardous Environments can be found in Reference [118]and further information regarding lighting for industry and security can be found in Reference [133].

5.3.2.27 Recommendations

Determine the illuminance requirements of the tasks carried out in the space.

Determine where the tasks are to be performed in the interior and what planes they will occupy.

Consider what aspects of lighting are important to the performance of these tasks.

Determine if (a) general, (b) localized or (c) local lighting for task or display is the most appropriate for the situation.

Determine what types of equipment are in use.

Ensure that surface reflectances are compatible with a range of proposed lighting solutions.

Ensure that window and naked bulb/tube screening of some form is available.

Ensure that office, desk, equipment and/or machinery layouts are suitable for the range of proposed lighting solutions.

Ensure that the relative reflectance and/or illuminances between the areas that the users are likely to look at in succession are minimized.

Ensure that areas of high or low illuminance are avoided, or provide some way of shielding them, e.g. blinds on bright windows.

Consider what hazards need to be seen clearly, and determine areas where sudden loss of light might present a serious risk.

Determine what impression the lighting is required to create.

Ensure that the following constraints are considered:

a. Is a hostile or hazardous environment present?
b. Are high or low ambient temperatures likely to occur?
c. Is noise or interference from control gear likely to be a problem?
d. Are mounting positions restricted and is there a limit on luminaire size?
e. Is the choice of equipment restricted by the need to make the installation compatible with existing installations?

It is recommended that the following detailed design principles are considered when planning the lighting design or refurbishment of an interior or exterior space:

f. Have all the relevant lighting variables been considered, e.g. uniformity, illuminance ratios, surface reflectances and colours, light source colour, colour rendering group, limiting glare index, and veiling reflections?
g. Have the designed maintained illuminance and variation been calculated for the appropriate working planes?
h. Has the glare rating been calculated?
i. What is the relationship between daylight and electric lighting? Is it possible to provide a control system to match the electric lighting to the daylight available?
j. Are the windows designed to limit the effects of solar glare and heat gain on the occupants of the building?
k. Has consideration been given to unshielded bright lights or localized bright areas that may come into the field of view of other users?
l. Does obstruction make some form of local lighting necessary?
m. Does any supplementary individual lighting provided to cater for personal needs or a particular task adversely affect visual conditions at nearby workstations?
n. How will the lighting installation influence other building services?

Ensure that manufacturer's guidance on luminaire spacing for desired illuminance levels is consulted and followed.

Ensure that regular array of luminaires is orientated so that they are end on to the viewing direction with the longest dimension.

Consider providing lighting which includes an element of up lighting as well as down lighting.

Ensure that suitable reflectances (as shown below) are chosen for interior environments, to ensure effective light distribution within the space.

SURFACE	REFLECTANCE
Ceiling reflectance	0.8
Walls around windows	0.6
Wall/partition surface to work surface	0.6-0.8
Non-window walls	0.3-0.7
Floors	0.2-0.4

Table 5.3:4: Reflectance for Interior Environments

Ensure that the layout of the installation is consistent with the objectives and the physical constraints.

Allow for the effects of obstruction by building structure, other services, machinery and furniture.

Decide how the luminaires are to be fixed to the building and what system of electricity supply is to be used.

Ensure that the electrical installation complies with the latest edition (with any amendments) of the IEE Regulations for Electrical Installations and BS 7671: 2001.

Ensure that stairs are lit in such a way that shadows are not cast over the main part of the treads.

Ensure that places of particular risk (such as pedestrian crossing points on vehicular traffic routes or traffic routes used by pedestrians) are adequately lit after dark.

5.3.2.28 Classification of Lighting Equipment

All lighting installations have three components: lamps, luminaires and some kind of central or local control system. There are many different types of all three components commercially available. Different lamp types produce light in different ways and as a result, the light has different properties. Different luminaire types diffuse or reflect the light produced by lamps in different ways. Finally, the type of control system has implications for safety, security and user satisfaction. Rapid developments in all three components are common. The general characteristics for tasks are considered below. However, once more for precise technical information it is essential to consult up-to-date technical literature of lamp, luminaire and lighting controls manufacturers.

5.3.2.29 Lamps

There are seven principal types of lamp, as shown in Table 5.3:5.

<table>
<tr><th>LAMP TYPE</th><th colspan="2">LAMP GROUP</th></tr>
<tr><td>Filament (tungsten and tungsten halogen)</td><td colspan="2">Incandescent</td></tr>
<tr><td>Tubular and compact fluorescent
Low pressure sodium</td><td>Low pressure
Low pressure</td><td rowspan="2">Discharge lamps</td></tr>
<tr><td>High-pressure sodium
High-pressure mercury and mercury tungsten blended
High-pressure metal halide</td><td>High pressure</td></tr>
</table>

Table 5.3:5: Principal Types of Lamp

Within each group there is a range of lamps available which differ in shape, colour properties, construction, wattage, luminous efficacy, need for control gear, starting and restarting times, effect of ambient temperature, service period, and relative initial and running costs. Details of the characteristics of different lamp types should be obtained from the manufacturers' technical data publications.

All discharge lamps produce emanations in the range of radio frequencies which can cause interference with communications equipment. Similarly, tubular fluorescent lamps operating on dimmer circuits, dimmers which use wave-chopping, and all lamps operating on high-frequency control gear are prone to producing radio frequency interference. The interference can be radiated, mains-borne, or mains-borne radiated interference and can affect radios, TVs, security monitoring devices, computers etc. Creating radio frequency interference is an offence in law and regulations related to it have been implemented in the UK. More information can be found in BS EN 60598-1: 2000, BS EN 55015: 2001 and the Electromagnetic Compatibility Regulations 1990.

Table 5.3:6 gives a summary of lamps typically used for particular activities:

TYPE OF LAMP	TYPICAL APPLICATIONS
Filament (tungsten)	domestic, display lighting
Filament (tungsten halogen)	domestic, display lighting, area floodlighting, projectors, vehicle headlamps
Tubular fluorescent	industrial and commercial
Compact fluorescent	replacement for tungsten lamps, with one quarter of the power consumption and 5 to 8 times longer life
Low-pressure sodium	exterior applications such as road lighting, security lighting
High-pressure sodium	road lighting, floodlighting, industrial interior lighting, sports halls, public concourses
High-pressure mercury tungsten blended	as a replacement for tungsten when longer life is essential
High-pressure mercury	industrial lighting, road lighting
High-pressure metal halide	area floodlighting, industrial and commercial lighting, stadia and studios, display lighting

Table 5.3:6: Lamps Typically Used for Particular Activities

5.3.2.30 Luminaires

'Luminaire' refers to the apparatus that controls the light output from a lamp and includes the electrical components and the equipment for housing and fixing the whole assembly.
There is a wide range of luminaires, but they all have to supply electricity to, provide support for, and protect the lamp. They must be safe during installation and operation. They are classified according to the type of protection from electric shock, the degree of protection against dust or moisture, and the surface material to which they can be fixed. They vary in construction, light distribution, maintenance characteristics, glare effects, mounting position, and the efficiency with which they provide light on the working plane. The standard which covers most luminaires in the UK is BS EN 60598-1:2000. Details of different luminaire types should be obtained from the manufacturers' technical data publications.

The manner of light distribution from a luminaire determines both the illuminance on the working plane and the visual appearance of a room. A bare light source is a source of direct and reflected glare, and gives a harsh appearance by producing areas of excessive contrast. It is therefore desirable to use reflectors or louvres to control the light distribution from a luminaire.

5.3.2.31 Control gear

A specific component of a lamp is the mechanism by which control over the lamp is effected. The control gear used with lamps has three main functions:

a. to start up the lamp;
b. to control the lamp after starting;
c. to regulate the output of the lamp, for example, during manual or automatically controlled dimming.

Control gear consumes energy. The power consumption of a discharge lamp circuit is the sum of the lamp power and the ballast power loss. Advanced developments in control gear, such as high frequency ballasts, consume only a small proportion of the total power used by the lamp circuit, and also have the advantages that they make little acoustic noise and are lightweight. The current ratings of cables, fuses and switchgear is to be related to the total running current of the circuit. Lamps and their control gear make up an integrated circuit for producing light. Lamps from different manufacturers may not operate with the same control gear even if they are supposed to be of the same type. Care must be taken to ensure that the proposed combination of lamp and control gear is compatible. The life of control gear is dependent on temperature and the control gear used should have a temperature rating appropriate to the situation. For technical information about particular types of control gear and their associated power losses, the manufacturer's information should be consulted.

There is an important trend towards the operation of fluorescent lamps at frequencies of around 30 kHz. High frequency ballasts improve lamp and circuit efficacy, and are also associated with improvements in visual comfort due to the absence of detectable flicker. Light output is approximately the same as an ordinary lamp of the same length, but of a higher wattage. Additional advantages of high frequency ballasts include better control over individual luminaires, daylight linking to reduce energy consumption and dimming.

5.3.2.32 Lighting control

Lighting control systems can take several forms, ranging from a simple on/off wall switch, through photoelectrically controlled dimming systems, to a full lighting and energy management system (LEMS) for a whole building. The primary aim of a lighting control system is to ensure that the lighting is only on when it is required, and that when it is operating, that it is doing so in the required state. Lighting control systems can also be a crucial component in reducing energy use.

Essentially, automated lighting controls either combine local switches with some form of central control, or use sensors to detect occupancy and/or daylight in an area and adjust the lighting accordingly. There are five main types of lighting control, which may be used individually or in combination, namely local control, time switch control, occupancy detection, photocell control and lighting energy management systems. The following sub-sections give details of the most common types of lighting control.

5.3.2.33 Local Control

At its simplest, lighting control consists of a wall switch, or bank of wall switches which the user operates when they enter or leave the workspace. This familiar type of manual control is often combined with automated control as will be described below.

Local controls can take many forms, listed below:

a. electro-mechanical wall switch;
b. pull cord;
c. touch/pressure sensitive switch;
d. dual press switch;
e. dimmer switch;
f. mobile infra red hand-held unit, switching and/or dimming;
g. wall-mounted infra red (hand-held) unit, switching and/or dimming;
h. telephone switching.

5.3.2.34 Timeswitch Control

Time signals from a central programmed controller switch off lights at certain times of day or night, e.g. after office hours. Occasionally they also switch the lights on. Time switch control is sometimes combined with internal or external photocell control (see later) to maximise savings where daylight is available.

5.3.2.35 Occupancy Detection

Occupancy sensors work in one of three ways; by detecting heat, movement, or sound. The most commonly used type reacts to both occupancy and lack of occupancy, by switching on when a person enters the space, and off when the space is no longer occupied.

A second type, which is becoming more common, responds solely to the lack of people in a space (often referred to as absence detection), and switches the lights off after a timed interval. 'On' switching, in this scheme, is left up to the user of the workspace by means of a local switch. Sometimes the occupant can also switch the light off manually using the local switch when they leave the space.

Occupancy detectors are sometimes combined with photocell linking to prevent lights being switched on when daylight is sufficient. This combination has become widely available only in the last two years.

5.3.2.36 Photocell Control

The basic idea of photocell control is to sense either available daylight or internal levels of illumination, and switch or dim lights according to the levels sensed.

With open loop control, an external photocell, mounted on a windowed exterior aspect of a building, is linked to the perimeter row (or two perimeter rows) of lights along that aspect. When the external daylight level exceeds a certain preset level, these rows of internal lights are switched off or dimmed down. When the daylight falls below another preset level the lights are switched back on or brightened back up. Dimming systems are becoming much more common now that high frequency controllable ballasts are used. With closed loop control, internal photocells control perimeter rows of lighting and switch or dim them to maintain a desired internal illuminance level. With the switching control, a certain amount of hysteresis must be inherent in the way the photocell controls the light, otherwise it would cycle as the off-switching of the lights dropped the illumination. This is normally achieved by having different set points for switch off and for switch on, or sometimes merely by a time delay (which can cause problems). Dimming controls tend to aim for a constant work surface illuminance.

5.3.2.37 Lighting Energy Management Systems (LEMS)

The most recent products to become available are lighting energy management systems. These (usually) run on a standalone personal computer (PC), although this is often linked to the Building Management Systems (BMS), for example to receive time signals. LEMS software usually shows mimic diagrams on the VDU screen of the lighting layouts in the different parts of the building, and fault detection and display, along with time programs and override functions, which can be changed according to the needs of the organisation.

These can provide much more flexible and adaptable control than conventional time programmers and hard-wired sensors, but their user interfaces vary from simple hierarchical menu based designs through to windows-based graphical user interfaces. The PC sends signals to local switching outstations or modules, or to addressable luminaires themselves.

5.3.2.38 Recommendations

Use the most up-to-date manufacturers' information on lamps, luminaires, control gear and lighting controls.

Consider all the relevant lighting variables, e.g. uniformity, illuminance ratios, surface reflectances and colours, light source colour, colour rendering group, limiting glare index, veiling reflections.

Ensure that the light source has the required lumen output, luminous efficacy, colour properties, lumen maintenance, life, run-up and re-strike properties.

Question if noise or interference from control gear is likely to be a problem.

Consider restrictions of mounting positions and limits on luminaire size.

When necessary, ensure that the choice of equipment is compatible with existing installations.

Ensure that the proposed lamp and luminaire package is suitable for the application.

Ensure that the luminaire will be safe and withstand the given environmental conditions.

Ensure that the fixture has suitable maintenance characteristics and mounting facilities.

Ensure that the fixture conforms to BS EN 60598-1:2000 or other appropriate standards.

Agree an appropriate maintenance schedule.

Where possible, obtain equipment that is resistant to dirt deposition.

Where possible, obtain equipment that can be maintained easily, is easily accessible and for which replacement parts are readily available.

Ensure appropriate control systems for matching the operation of the lighting to the availability of daylight and the pattern of occupancy.

Question if a dimming facility is desirable.

If manual switches or override facilities are provided, ensure they are easily accessible and their relationship to the lighting installation is understandable.

Ensure light switches are carefully positioned so that they may be found and used easily and without risk.

Ensure that lights are not obscured to such an extent that light becomes insufficient.

Ensure that windows, skylights etc are kept clean regularly and kept free from unnecessary obstruction to admit maximum daylight.

Where possible ensure that new and existing workplaces/workstations take advantage of the available natural light.

5.3.2.39 Energy Considerations

The lighting of an environment or workspace should be appropriate for the tasks carried out, and the occupancy levels in a space. It is important that work quality, productivity and visual comfort are not compromised by poor lighting levels created by too much focus on energy saving. However, in practice, a lot of energy can be wasted by inappropriate use of lighting, for example, lights left on overnight while a building is unoccupied, or artificial lighting used in an area where natural light levels are sufficient. Adequate lighting controls should be installed to ensure that lighting use is appropriate for the types of tasks and occupancy levels of a building at any time.

5.3.2.40 Energy Efficiency

The energy used by any lighting installation is dependent on two factors, power and time. There are two main ways of maximizing energy efficiency:

a. By using appropriate lighting controls so that lighting is only used when it is required, i.e. the time component is minimized.

b. By using the most energy efficient lighting equipment and control gear for the lighting application required i.e. the power output for the lighting design and power losses in the circuit are minimized.

5.3.2.41 Energy Management

A third component is sensitive energy management on the part of the users of a building. High awareness on the part of the occupants of the building space of the ways of reducing energy consumption combined with local control down to the level of the individual user or small group of luminaires has been found to be associated with high energy efficiency and high user satisfaction. The reverse situation, where users have little or no control over the lighting of their workspace, and low awareness of energy consideration, leads to low user satisfaction and high energy consumption.

The ultimate aim should be to achieve the illuminance level required for the range of tasks and occupancy level of the space, combined with the lowest practical energy use, using a combination of efficient lighting equipment, good lighting control and good lighting management.

There is a popular misconception about fluorescent and discharge lamps that switching them off and back on again when, for example, one leaves a room to go to a meeting etc, uses more energy than leaving them on. However, in reality, the energy taken during starting is a small fraction of the energy used in running the lamp for one minute. Therefore it is almost always more energy efficient to switch lights off when leaving a workspace empty for a short period of time.

5.3.2.42 Lamp Dimming/Regulations

Dimming can reduce the energy consumed by a lamp. It can be controlled manually, or automatically using photocells which respond to daylight availability. Recent developments in control gear technology, namely high frequency electronic ballasts, have made dimming more common in newly designed workplaces. Current lighting design practice favours the use of high frequency ballasts which regulate the lamp output according to task and visual needs. Those systems which are under user local control tend to be those which are most successful in terms of user satisfaction and energy saving.

5.3.2.43 Recommendations

Consider appropriate lighting controls for the lighting design.

Consider the use of daylight for illumination wherever possible.

Select the most energy efficient lighting equipment and control gear for the application required.

Match the use of the lighting to the occupancy levels of the interior or exterior environment.

Ensure that the users of the space have high awareness of, and good control over, the lighting.

Provide local dimming control of small numbers of luminaires.

5.3.2.44 Maintenance of Lighting Installations

As a lighting installation ages, the electrical load does not change, but the light output of the installation deteriorates due to the build up of dirt and dust etc. Lighting installations are therefore designed to 'maintained illuminance', which is defined as the average illuminance over the reference surface at the time maintenance has to be carried out by replacing lamps and/or cleaning the equipment and room surfaces. Maintenance of all lighting, including emergency and standby lighting, is essential to ensure that illuminance is kept within the design limits, and to enhance safety and the efficient use of energy.

5.3.2.45 Lamp replacement

Lamp replacement is dependent on two potential deteriorations in performance, namely, the reduction in light output and the probability of failure. Tungsten filament and tungsten halogen lamps usually fail before the change in light output is noticeable, and replacement is therefore dependent on this factor alone. However, all other light sources usually used in interiors show a significant reduction in light output before many of them fail. Frequently, therefore, it is necessary to replace these before they fail, because the light output has fallen to unacceptable levels for the task.

For the majority of installations group replacement is usually the most sensible means of maintenance of the lighting for a number of reasons. This ensures that the appearance and light output of the installation remains uniform; it reduces the time overheads associated with disturbance to task activities in the interior, as it can take place at times when the building is unoccupied, and can be combined with luminaire cleaning.

Finally, it ensures that the risk of damage to control gear by faulty operation of lamps near to the end of their life is minimized. Lamps which do fail unexpectedly or start to flicker before the planned maintenance period should be replaced promptly on an individual basis with lamps of the same type as the rest of the installation. For most installations the general economic time for group replacement is when the lamp light output has depreciated 25% below the initial value. This is also usually the point at which lamp failures are starting to be significant.

5.3.2.46 Luminaire Cleaning Schedule

The frequency of luminaire cleaning depends on the amount and type of dirt in the atmosphere, and on the type of luminaire. Depending on their construction and sealing, luminaires can collect dirt on both the inside and the outside, and need to be cleaned as a result. As a general rule, for most interiors, luminaires should be cleaned once a year. However, for particularly dirty or dusty atmospheres this may not be sufficient. To ensure that illuminance for an environment is maintained, cleaning intervals for a lighting installation should be based on manufacturers' data. Manufacturers also provide information on the most suitable cleaning methods for their equipment. It is usually cost-effective to combine luminaire cleaning with lamp replacement.

If reflected light from room surfaces is an important component of the lighting of the interior, it is also particularly important to keep room surfaces cleaned and redecorated regularly.

Maintenance of lighting installations should only be carried out by experienced and skilled personnel, as they are working with electricity and there are obligations under the Electricity at Work Regulations 1989. There are also often difficulties with access to lighting installations. Maintenance personnel should have received training to satisfy the health and safety legislation associated with this activity.

Certain types of lighting equipment can cause risks to health and safety if damaged. Guidance on the disposal of used or damaged lighting equipment is available from manufacturers' data and the Lighting Industry Federation.

5.3.2.47 Recommendations

Ensure that the design maintained illuminance for the installation has been determined.
Agree an appropriate cleaning schedule (yearly intervals are appropriate for most interior installations).

Agree an appropriate replacement schedule.

Ensure that lamp maintenance/replacement is carried out at the agreed time (i.e. the time that the design maintained illuminance has been calculated upon).

Ensure that workstation and room surfaces are cleaned regularly, especially if reflected light from room surfaces is an important component of the lighting.

Ensure that the equipment can be easily maintained, is easily accessible and that replacement parts will be readily available.

If it cannot be easily maintained, ensure that the equipment is resistant to dirt deposition and has a low failure rate.

5.3.2.48 Special Lighting Conditions

In this section guidance is presented on the factors which affect lighting design in particular types of installation.

5.3.2.49 Display Screen Equipment (DSE) Installations

The introduction of DSE into offices and/or industrial workplaces has brought with it a host of problems, usually to do with various forms of discomfort experienced by the Display Screen Equipment user. The Health and Safety (Display Screen Equipment) Regulations, 1992 define employer duties to meet certain minimum standards for workplaces where DSE is used. Guidance on effective lighting for DSE use is described in the CIBSE Lighting Guide 3: 1996, and is intended for use by people who wish to introduce DSE into an existing workplace, or to design new buildings where DSE will be used. A summary of the important points is given below, but for further information, the Guide should be consulted.

The main effect of bringing DSE into a traditional workplace is the change from working with paper on a flat horizontal surface, to working with a screen and keyboard. The reading and writing of text is performed on a vertical screen and a horizontal keyboard respectively. The user may also continue to use papers and other equipment on the work surface as part of their job.

There are four lighting-related problems associated with DSE use:

a. The possibility of high luminance reflections from artificial lighting and daylight on the screen. These reflections may occlude the screen characters or graphics, making them difficult to see and read, and thus rendering the task more difficult. The presence of reflections may cause the user to adopt awkward postures to 'see round' the reflections, which may lead to postural discomfort and fatigue.

b. There may be an imbalance in the luminance distribution around the main lines of sight, for example, when a display screen is positioned backing into a bright window. This is known as static imbalance. There is evidence that static imbalance causes task performance to be reduced and visual comfort to be decreased.

c. There may be an imbalance between the luminance of surfaces looked at regularly by the DSE user, for example, white or glossy paper on a dark desktop or positioned in a document holder next to a dark display screen. This causes discomfort as the visual system has to adapt continually as the object viewed changes.

d. Normal mains frequency pulsations from lighting have been associated with a higher incidence of headaches. For this reason, fluorescent lighting with high frequency ballasts is recommended for new or refurbished lighting installations. New evidence also shows that screen flicker can lead to a high rate of eye movement when reading text on the screen. For this reason, screens with a high refresh rate and non-interlaced display are recommended.

Information concerning the use of colours and visual display unit requirements can be obtained from ISO 9241, parts 3 and 8.

5.3.2.50 Illuminance

The illuminance range recommended for areas with DSE use is between 300 and 500 lux. Where source documents are of poor clarity or degraded, levels up to 1000 lux are acceptable.

5.3.2.51 Lighting Design Approaches for DSE

There are three possible approaches to lighting design for DSE, namely down lighting, up lighting or direct/indirect lighting.

5.3.2.52 Down lighting

The directions from which high luminance reflections from luminaires can be seen in a vertical or near-vertical screen are geometrically determined. Therefore, if the DSE is on a desk with someone sitting in front of it, limiting the luminance of the luminaire above the angle of view from the screen will also limit the luminance of reflections on the screen. The luminance is limited according to three categories of use: intense DSE use; general DSE use; and minimal/occasional DSE use. Manufacturers' technical data provides the category for DSE use that their luminaires can provide. The luminaires are described as category 1 (for intense use), category 2 (for general use) and category 3 (for occasional use). They have luminance limitation above 55°, 65° and 75° to the downward vertical respectively.

One of the effects of limiting the luminance and directing the light output downwards is that the illuminances on vertical surfaces and the ceiling are very low, creating a 'cave effect' that can appear gloomy and dark.

5.3.2.53 Up lighting

Up lighting helps to eliminate reflections by using the ceiling as a large area low luminance luminaire. The luminance of reflections caused by such a luminaire is low, and changes gradually over a large area. As long as this luminance is lower than the character luminance, the screen text and graphics remain visible. One of the effects of up lighting is that it gives the impression of a light airy interior, but the lighting is very diffused, causing a lack of visual variety.

5.3.2.54 Direct/Indirect Lighting

This is an approach combining elements of down lighters and up lighters, and is to be recommended wherever possible. Usually the characteristics associated with each approach are softened, i.e. the cave effect is minimized, and there is more visual variety in the lighting of room surfaces.

5.3.2.55 Recommendations

Ensure that operators can take steps themselves to screen or shade local lighting.

To prevent dynamic imbalance, ensure that the relative reflectance and/or illuminances between the areas that the users are likely to look at in succession are minimized.

To prevent static imbalance, ensure that areas of high or low illuminance are avoided, or provide some way of shielding them, (e.g. blinds on bright windows).

Ensure that the keyboard surround and the surround to the display are of medium reflectance in a matt finish.

Ensure that the luminance ratio between the screen and other items in the immediate visual field is not more than 3:1. Aim for a ratio of 5:1 between the screen and background office areas.

Ensure that there are no large areas of unscreened window behind or in front of the operator, and that window blinds or other screening methods are available.

Ensure that flicker from screens and artificial lighting is minimized.

Ensure that screens are positioned, wherever possible, at right angles to the windows. This helps to prevent reflections in the screens from the windows, and areas of high illuminance behind the user's screen.

Ensure that screens are positioned, wherever possible in the spaces between luminaires, in order to minimize reflections of the luminaires in the screen.

Ensure that appropriate (depending on the type of tasks carried out in the space) Category 1, 2 or 3 luminaires are used in the DSE installation.

Consider the use of a combination of direct and indirect lighting to minimize the 'cave effect' and to maximize visual variety.

5.3.2.56 Emergency Lighting

Emergency lighting is intended for use whenever the main lighting is not available or fails to operate. When this occurs, emergency lighting can be used to provide either standby or escape lighting. There are two special requirements for emergency lighting equipment:

a. The need for near-immediate light output in the event of main lighting system failure means that tungsten, tungsten halogen and tubular fluorescent lamps are the only types suitable for emergency lighting (other types take too long to reach full output).

b. A mechanism for connecting the lamp to the alterative battery or generator electricity supply is needed for when the main lighting system fails.

5.3.2.57 Standby Lighting

This allows essential work to be continued, whereas escape lighting allows a building to be evacuated. Standby lighting is used under certain conditions where it is not possible, or may not be desirable, to evacuate the building immediately. The illuminance needed for standby lighting depends on what work has to be done under the standby conditions, the expected duration of the tasks and the risk to life, health of safety. Dependent on these factors, the illuminance levels may be between 50 and 100% of the illuminance produced under normal conditions.

5.3.2.58 Escape Lighting

Escape lighting is covered by BS 5266-1:1999 and is a legal requirement due to its status as part of the Building Regulations, and as part of many local by-laws. See the recommendations below for the main requirements:

For further information on emergency lighting, CIBSE has produced a Technical Memorandum on Emergency Lighting.

5.3.2.59 Recommendations

General design principles:

a. Consider what form of emergency lighting is needed.
b. Ensure that the emergency lighting is powered by a source independent from that of the normal lighting.
c. Ensure that the emergency lighting will be immediately effective in the event of failure of the normal lighting, without the need of action by anyone.
d. Will the emergency lighting provide sufficient light to enable persons at work to take any action necessary to ensure their own and others' health and safety?

Detailed design principles:

e. Define and mark the exits and emergency exits clearly.
f. Define and mark where changes of direction signs are needed.
g. Identify and mark the escape routes and areas which will require special provision, e.g. changes of direction signs, control rooms, plant rooms, fire equipment etc.
h. Locate light fittings so that recommended illuminances are met, and special provision areas are lit.
i. Ensure that lighting outside the building is adequate to allow evacuation to a place of safety.
j. Prevent glare by mounting the emergency fittings at least 2 m above the floor, but not higher, as smoke may then reduce the illuminance on the escape route.
k. Prepare a maintenance and testing schedule.

Main requirements of BS 5266-1: 1999:

l. All exits and emergency exits must have signs indicating that they are exits or emergency exits. The signs should comply with BS 5499.
m. Additional signs are required to direct people to these exits if the exits themselves are not visible.
n. A clearly defined escape route so signed should be lit to a minimum of 0.2 lux along the centre line at floor level.
o. 50% of the route width of escape routes up to 2 m wide should be lit to a minimum of 0.1 lux.
p. The emergency lighting must be provided within 5 seconds of the main lighting system failure.
q. The escape lighting luminaires should not be sources of disability glare.
r. Escape lighting luminaires should be located near each exit door and emergency exit door and wherever necessary to emphasize hazards, changes of direction etc.

s. Fire equipment along the escape route must be adequately illuminated at all times.
t. Lifts and escalators should be adequately illuminated at all reasonable times.
u. Emergency lighting is required in all control rooms and plant rooms.
v. Escape lighting should be provided from toilets, lobbies etc.
w. Regular maintenance and testing of emergency lighting equipment is essential.

5.3.2.60 Illuminance Requirements for Military Circumstances

In the following sections we consider factors affecting lighting design for particular military circumstances.

5.3.2.61 Night Vision

Some operations, particularly at night, require efficient dark-adapted vision for maximum performance. For example, detection of the enemy; recognition of one's own forces at a distance; vision through a periscope for a submariner; detection of flares and signals etc, all require good night vision. People may also need to move from a lit interior into an unlit environment and maintain good vision. The conditions of these opposite requirements can be partly met by using a red or low intensity white lighting system.

Red illumination suffers from certain disadvantages:

a. Poor colour rendering, to the extent of making some colours impossible to see.
b. Visual discomfort and an unpleasant working environment, particularly in those with surfaces of low reflectance.
c. Focusing problems, particularly for older personnel.

5.3.2.62 Night Vision and Optical Instruments.

Under low lighting levels the eye changes its focusing power and becomes more near-sighted. In view of this it is advisable for users of binoculars, periscopes and range finders to make a readjustment of the eyepiece under night conditions. Departures of more than 0.5 dioptre in either direction from the optimal focus decrease visual sensitivity and acuity.

5.3.2.63 Night Vision Sensitivity

The eye and nervous system are particularly sensitive to a lack of oxygen, and a lowering of the oxygen content of the blood can reduce night vision sensitivity. This can occur in unusual conditions of ventilation, e.g. carbon monoxide contamination, air-tight submarine ventilation. Exposure to reduced oxygen at high altitudes causes an increase in the time for dark adaptation, under conditions equivalent to a height of 5000-7000 ft the change in visual sensitivity is quite significant. Heavy smoking, a deficiency of glucose, optic neuritis and retinitis pigmentosa are other conditions in which night vision is impaired.

5.3.2.64 Full Dark Adaptation

Where full-dark adaptation is required for critical detection of objects, e.g. watch keepers and periscope users, personnel should not be exposed to a red light luminance greater than 0.03 cdm^2. This just permits cone vision to operate and requires a re-adaptation time of 5 minutes in full darkness to achieve complete sensitivity.
Where some loss of dark adaptation is permissible, and where sight is essential for charts and instruments, continuously variable illuminances should be provided. Recommended ranges are:

a. White light: 0.5-10 lux.
b. Red light: 1.0-20 lux.

In general, observers may require a luminance of red light that is 15% higher than white light at these low intensities for chart or map reading. For interiors or compartments, stairways, bridge areas and corridors the recommended red lighting illuminance is 20 lux. Repair work with larger size detail can be conducted under 55 lux of red lighting after 30-40 secs of adaptation to that light. A period of 2.5 minutes of adaptation would be required for smaller sized tasks. See Reference [128]for further information.

5.3.2.65 Re-adaptation Times Following Light Exposure

Dark-adapted personnel seeing a bright light through an open door for 0.3 seconds would require about 6 minutes re-adaptation. See Reference [128]for further information.

Research has shown that exposure of subjects to various intensities of light for about 6.5 minutes after 15 minutes dark adaptation gave the following average times to recover their sensitivity to within 0.5 log units of the threshold to which they had originally adapted. See Reference [153]for further information.

a. Exposure to 4.0 cd m^{-2} red lighting, recovery time: 38 secs.
b. Exposure to 0.5 cd m^{-2} white lighting, recovery time: 57 secs.
c. Exposure to 2.5 cd m^{-2} white lighting, recovery time 110 secs.
d. Exposure to 12.5 cd m^{-2} white lighting, recovery time: 200 secs.

Hence temporary exposures to higher light intensities for quickly seeing a particular detail may be acceptable for some personnel whose re-adaptation time may not be that critical.

Recovery from dark adaptation or a low level adaptation to the fully light adapted state is not an instantaneous process, although it is accomplished in a much faster time than that of dark adaptation.

5.3.2.66 Daytime Lighting Inside Compartments and Vehicles

Except where security precautions and conditions are required, interior lighting in military transportation should conform with the general requirements of interior lighting design. Guidance on required illuminances should be derived from considerations of task requirements as described in this document and from the CIBSE Code.

5.3.3 Specific Military Applications

Table 5.3:7 below shows illuminances required for different tasks in military fighting vehicles. See Reference [125] for further information.

TASK	ILLUMINANCE (LUX)	
	NIGHT (RED LIGHT)	DAYLIGHT
Map reading	11	108
Clearing machine gun	4	43
Operation of controls	3	43
Stowage	0.2	1

Table 5.3:7: Illuminances Required for Different Tasks in Military Fighting Vehicles

NOTE: Use of red (or other coloured) lighting for night work and its effect on colour rendering and differentiation is especially relevant in the reading of coloured maps.

5.3.3.1 Security Lighting and Lighting for Closed-Circuit Television (CCTV) Surveillance Applications

Research has shown that vertical illumination in the 4-10 lux range usually ensures a high level of detection and recognition. Low pressure sodium lighting has been found to be as effective as high pressure sodium for the detection of intruders and the recognition of faces. Preferences for the different lighting conditions have been found to be consistent with the effect of those conditions on their ability to perform their respective tasks. See References [106] and [108] for further information.

The spectral distribution of the light source used in conjunction with CCTV has a significant influence on the quality of monochrome images provided by CCTV. For further information see Reference [152].

5.3.3.2 Ships and Submarines

Historically, ships used red or blue lighting as the standard ambient illumination for shipboard use, as it provided enough light to perform various watch standing tasks while having the smallest effect on the dark adaptation level of watchstanders on the bridge or in the Combat Information Centre. In more recent times the technology used on board has increased the number and complexity of 'routine' tasks performed. This increase in task requirements led to more complaints from operators about the use of red/blue lighting. The use of red lighting on submarines was also being questioned, and the US Naval Submarine Medical Research Laboratory conducted a series of studies to evaluate the feasibility of replacing red lighting on board ships and submarines.

Increasingly, red light is no longer used and wherever possible it should be avoided. The best alternative on submarines appears to be the use of an achromatic lighting system at a level of intensity equal to or lower than that of red/blue illumination. This lighting system, Low Level White (LLW) lighting, provides significant improvements in performance without disrupting dark adaptation.

Lighting on surface ships is different in several significant ways from submarine lighting. On surface ships, there is an operational requirement for dark adaptation throughout the twilight hours; and many ships operate continually under night-time illumination conditions in the Combat Information Centre (CIC) while underway. The feasibility of LLW as a replacement for the red illumination used on surface ships has been reviewed. Operational tasks in the combat information centre under low level white lighting have been shown to improve, and staff have reported fewer headaches and fatigue. However, the use of LLW on the bridges is not recommended as the glare produced on the bridge windows using LLW can reduce visibility considerably. See Reference [129] for further information.

The specific requirements for lighting systems on surface ships and submarines can be found in Defence Standard 02-587.

5.3.3.3 Fixed and Rotary Wing Aircraft

A number of factors affect the viewing conditions in fixed and rotary wing aircraft. Appropriate lighting of aircraft instruments, panels, controls, indicators and displays is essential. The lighting should be usable over a wide range of ambient conditions, particularly in twilight and at night. It should be uniform, low glare, and be continuously dimmable to very low luminance levels so that pilots can become partially dark-adapted for good out-of-the-cockpit viewing. Further information on cockpit lighting and the use of night vision goggles can be found in References [141], [142], [143], [144], [145] and [151].

Helicopter operations can pose considerable visual problems for air crew, ranging from factors degrading vision both externally and internally, to the protection of air crew against ocular hazards. For further information concerning visual hazards and protective equipment, and the importance of ocular physiology, visual standards, transparency optics and cockpit lighting systems see References [106] and [109].

Night imaging systems based on image intensification tubes are important in the night operation capability of helicopters. A major problem with the use of these systems is the interference caused by internal cockpit lighting, which activate the bright source protection control circuits of the intensification tubes and reduce their sensitivity to external natural and artificial illumination. For further information on cockpit lighting compatibility with image intensification night imaging systems, see Reference [138].

See Reference [132]for further information on cockpit lighting standards, techniques for use with night vision goggles, image degradation, daylight, unaided eye viewing, complementary filter cockpit lighting, shared aperture systems, window filter systems and illumination, luminance and radiance and low reflection paint.

5.3.3.4 Recommendations

Wherever possible for specific military circumstances, mock-ups of the workstation and environment under different lighting conditions, should be tested by users carrying out a set of representative tasks.

Ensure that personnel who require full dark-adaptation to carry out their tasks are not exposed to red lighting levels any greater than 0.03 cdm^2.

Ensure, wherever possible, that complex or safety-critical visual tasks will not be carried out at night under conditions in which night vision is likely to be impaired.

Provide continuously variable illuminances where seeing is essential for charts and instruments, and where some loss of dark adaptation is permissible.

Use white light for design wherever possible, and architecturally separate the areas where red light or darkness need to be used.

Use low level white lighting systems in situations where good dark-adapted vision as well as reading maps, charts or instruments is required. Ensure that personnel whose tasks require higher levels of white illumination are well screened or architecturally separate from those who need to remain dark-adapted.

Use low level white illumination wherever possible for complex visual tasks, in order to minimize visual discomfort.

5.4 Summary of Luminaires, their Associated Lamp Types and their Typical Use for Particular Activities or Environments

LUMINAIRE TYPE	LAMP TYPES	TYPICAL APPLICATION
Globe	tungsten, compact tubular fluorescent, high-pressure mercury tungsten blended	offices, domestic, commercial areas
Cone	tungsten, compact tubular fluorescent, high-pressure mercury tungsten blended	offices, industrial premises
Bare batten	tubular fluorescent	offices, industrial premises
Batten with visual display screen equipment (DSE) specular reflector	tubular/compact fluorescent	offices with display screen equipment
Industrial batten with trough, or angled reflector	tubular fluorescent	industrial premises
Industrial batten with specular reflector	tubular fluorescent	warehouses, industrial premises with narrow aisles
Batten with opal diffuser	tubular fluorescent	offices, industrial premises where lamps have to be enclosed
Batten with prismatic controllers or opal sides and prismatic base	tubular fluorescent	offices, industrial premises where lamps have to be enclosed
Linear reflector	tubular fluorescent	offices
Linear louvre	tubular fluorescent	offices
Recessed diffuser	tubular fluorescent, high-pressure mercury, metal halide, high-pressure sodium	offices

LUMINAIRE TYPE	LAMP TYPES	TYPICAL APPLICATION
Recessed prismatic	tubular fluorescent, high-pressure mercury, metal halide, high-pressure sodium	offices
Recessed reflector	tubular fluorescent, high-pressure mercury, metal halide, high-pressure sodium	offices
Recessed louvre	tubular fluorescent, high-pressure mercury, metal halide, high-pressure sodium	offices
Modular aluminium reflector with transverse blades, DSE category 1	tubular/compact fluorescent	offices with one or more of the following conditions: - high density of DSE, - intensive usage, - where errors are critical, - CAD/graphics screens, - screens with poor contrast/definition, - DSE with highly specular screens
Modular aluminium reflector with transverse blades, DSE category 2	tubular/compact fluorescent	offices with fairly widespread DSE use combined with other office tasks
Modular aluminium reflector with transverse blades, DSE category 3	tubular/compact fluorescent	offices with infrequent DSE use
Bare lamp reflector with or without anti-glare skirt	high-pressure mercury with internal reflector, high-pressure sodium with internal reflector	high bay industrial premises (5 m or above)
High bay reflector	high-pressure mercury, metal halide, high-pressure sodium	high bay industrial premises (5 m or above)
Low bay with reflector, louvre, or prismatic base	high-pressure mercury, metal halide, high-pressure sodium	industrial premises where mounting above 5 m heights is impossible (usually 3 to 5 m)
Coffered ceiling	tubular fluorescent, high-pressure mercury, metal halide, high-pressure sodium	offices
Luminous ceiling	tubular fluorescent	social/commercial interiors

LUMINAIRE TYPE	LAMP TYPES	TYPICAL APPLICATION
Up lighters	High-pressure mercury, metal halide, high-pressure sodium, compact or tubular fluorescent	offices
General diffusing compact luminaires	originally filament lamps, now compact fluorescent	amenity lighting in small areas such as toilets or where compact appearance of the luminaire or a smaller source desirable
Down lighters with reflectors	tungsten, tungsten halogen, compact or tubular fluorescent, high-pressure mercury	display areas
Adjustable display lighting luminaires	tungsten, tungsten halogen, high-pressure mercury, metal halide, high-pressure sodium, compact or tubular fluorescent	narrow to wide spotlights on display areas, accent lighting, asymmetrical floodlighting
Industrial clear patterned proof fluorescent	compact or tubular fluorescent	hostile environments
Bulkheads	tungsten, high-pressure sodium, high-pressure mercury, low-pressure sodium, tubular fluorescent	industrial premises, exterior environments
Floodlighting projector	tungsten halogen, high-pressure sodium, high-pressure mercury, low-pressure sodium, metal halide	industrial area floodlighting, vehicle parks
Street lighting lanterns	High-pressure sodium, high-pressure mercury, low-pressure sodium, metal halide	road lighting
Hand lamps	tungsten, tubular fluorescent	premises where severe obstruction occurs
Emergency/escape self contained luminaires and signs	compact fluorescent (with rechargeable batteries, and a combined inverter and electronic ballast capable of operating the lamp at reduced output from the batteries	escape route for safe movement to an exit
Emergency/escape slave luminaires	compact fluorescent	alternative to self-contained luminaires (runs off extra low voltage from a battery room or a mains supply from a safety source.
Emergency/escape long lamp inverters with battery packs built into conventional luminaires	compact or tubular fluorescent	alterative to separate self-contained luminaires

5.4.1.1 Darkness and Dazzle

The human eye is an extremely versatile sensor. Most people possess the ability to perceive a broad range of colours and have a high degree of acuity (see section P10).

In addition the human eye can function very effectively over a considerable range of ambient illumination, from bright sunlight (10^7 lux) down to starlit night and lower (approx 10^{-5} lux). At the extremes of this scale the brightest tolerable light is 10^{12} times that of the lowest brightness necessary to produce the sensation of light. There are two consequences of this range which are of particular significance in military operations. Firstly, the colour system of the eye does not operate at night due to the physiology of the eye (see Part P10, Sensory Characteristics). Secondly, a period of adaptation is required for efficient visual functioning in the dark after leaving a lighter zone. The period of adaptation required in the light, after leaving a relatively dark area, is considerably less. The implications of this are readily obvious if naked eye surveillance must be undertaken at night after leaving a brightly-lit room, or if viewing through an image intensifier is succeeded by naked-eye viewing.

For a detailed exposition of this topic, and practicable solutions, the reader is directed to Part HFE4 of this Defence Standard, (Light Sensitivity) and (Illuminance Requirements for Particular Military Circumstances).

5.5 Definitions

Achromatic (displays). Displays generating colours that are perceived to be without hue. The colour names grey, black and white are commonly used.

Adaptation. The process that takes place as the visual system adjusts itself to the luminance or the colour (chromatic adaptation) of the visual field. The term is also used, usually qualified, to denote the final state of this process. For example 'dark adaptation' denotes the state of the visual system when it has become adapted to a very low luminance.

Ambient illumination. General level of illumination at the workstation.

Brightness. The subjective response to luminance in the field of view dependent upon the adaptation of the eye.

Candela (cd). The SI unit of luminous intensity, equal to one lumen per steradian.

Chromaticity diagram. Plane diagram showing the results of mixtures of colour stimuli, each chromaticity being represented unambiguously by a single point on the diagram. Co-ordinates in this diagram are known as chromaticity coordinates.

CIE. An international organization responsible for colour and light measurement standards. The initials stand for Commission International de l'Eclairage which translates as International Commission on Illumination.

Cockpit lighting conditions. The maximum ambient illumination in a transport aircraft flight deck is at least 86,000 lux while in a bubble-canopy aircraft the value is at least 107,500 lux. These figures are affected by factors such as sun altitude and transmittance of the windshields or canopy.

Colour coding. Colour coding is a process by which different colours are used to represent different categories of information. For example, a red traffic light means 'Stop' while a green traffic light means 'Go'. If colour provides a completely unique source of information the coding is called non-redundant. Colour can also be combined with other coding dimensions such that two or more codes correlate with one another. This is referred to as redundant coding.

Colour Rendering. The term applied to a light source to describe how it affects the appearance of the coloured surfaces it illuminates.

Contrast. A term that is used subjectively and objectively. Subjectively it describes the difference in appearance of two parts of a visual field seen simultaneously or successively. The difference may be one of brightness or colour or both. Objectively, the term expresses the luminance difference between the two parts of the field. There are four types of contrast used in this standard.

a. Contrast modulation $= \dfrac{L_{max} - L_{min}}{L_{max} + L_{min}}$

b. Contract ratio $= \dfrac{L_{max}}{L_{min}}$

where L_{max} and L_{min} represent the maximum and minimum luminances, respectively.

c. Effective contrast (C_e):

$$C_e = \frac{(L_t + L_v) - (L_\delta + L_v)}{(L_\delta + L_v)}$$

where L_t = luminance of task detail (cd m^{-2})
L_b = luminance of task background (cd m^{-2})
L_v = equivalent veiling luminance (cd m^{-2})

d. Psychometric contrast $= \dfrac{L_t - L_\delta}{L_\delta}$

where L_t = luminance of task detail (cd m^{-2})
L_b = luminance of task background (cd m^{-2})

Contrast sensitivity: The ability to perceive a lightness or brightness difference between two areas. See also Def Stan 00-25 (Part 25).

Daylight factor, internally reflected component (Di). The illuminance received at a point indoors from a sky of known or assumed luminance distribution after reflection within the interior, expressed as a percentage of the horizontal illuminance outdoors from an unobstructed hemisphere of the same sky. Direct sunlight is excluded from both illuminances.

Design maintained illuminance. The maintained illuminance used in a lighting specification. Design maintained illuminance is derived from the standard maintained illuminance by taking account of the modifying factors contained in the flow chart.

Diffuse reflection. Reflection in which the reflected light is diffused and there is no significant specular reflection, as from a matt paint.

Diffuse lighting. Lighting in which the luminous flux comes from many directions, none of which predominates.

Direct lighting. Lighting in which the greater part of the luminous flux from the luminaires reaches the surface (usually the working plane) directly, i.e. without reflection from surrounding surfaces. Luminaires with a flux fraction ratio less than 0.1 are usually regarded as direct.

Disability glare. Glare produced directly or by reflection that impairs the vision of objects without necessarily causing discomfort.

Discharge lamp. A lamp in which the light is produced either directly or by the excitation of phosphors by an electric discharge through a gas, a metal vapour or a mixture of several gases and vapours.

Discomfort glare. Glare which causes visual discomfort.

Display (visual). The type of information medium that is relevant to, and observed by, the human sense of sight.

Dominant wavelength. Wavelength of the monochromatic light stimulus that, when combined in suitable proportions with the specified achromatic light stimulus, yields a match with the colour stimulus considered.

Down lighter. Direct lighting luminaire from which light is emitted only within relatively small angles to the downward vertical.

Effective reflectance. Estimated reflectance of a surface, based on the relative areas and the reflectances of the materials forming the surface. Thus, 'effective wall reflectance' takes account of the reflectances of the wall surface, the windows, the filing cabinets, that comprise the sides of the room.

Emergency lighting. Lighting provided for use when the main lighting installation fails.

Energy management systems (EMS). Computer based systems for controlling the energy use of the installed load of a complete site, a single building or a section of the building. The signals which initiate the controls may be related to time of year, month, week or day, maximum demand or power factor, daylight availability, occupancy etc. Building energy management systems (BEMS) provide control commands for all equipment on a site, whilst a lighting energy management system (LEMS) will be dedicated to the lighting installation. The LEMs can be independent or linked into the BEMS. Such systems can also be linked to security, fire warning and maintenance systems.

Escape lighting. Emergency lighting provided to ensure that the means of escape can be safely and effectively used at all material times.

Flicker. Visible modulation of luminous flux. Also referred to as temporal instability.

Fovea. The fovea is the retinal region that provides a person's best visual acuity. It covers an area of retina of about 5 degrees diameter. A section through the fovea reveals that it is a pit because the blood vessels and neural machinery that usually lie on top of the photoreceptors are pushed aside helping to improve image quality. At the base of the fovea is a smaller area (the foveola) that contains only cone cells. This covers an area of retina of about 1.5 degrees diameter.

General lighting. Lighting designed to illuminate the whole of an area without provision for special local requirements.

Glare. The discomfort or impairment of vision experienced when parts of the visual field are excessively bright in relation to the general surroundings.

Glare index system. A system which produces a numerical index calculated according to the method described in CIBSE TM10. It enables the discomfort glare from lighting installations to be ranked in order of severity, and the permissible limit of discomfort glare from an installation to be prescribed quantitatively.

Group lamp replacement. A maintenance procedure where all lamps are replaced at one time. The lumen maintenance characteristics and probability of lamp failure dictate the period after which bulk replacement, usually linked with luminaire cleaning, will take place. This method has visual, electrical and financial advantages over the alternative of 'spot replacement'.

Hazardous environment. An environment in which there exists risk of fire or explosion.

Head-Up Display (HUD). A type of display incorporating a part-reflective panel ('combiner') upon which the displayed image is projected at infinity, allowing the operator to view the image and background together.

Hertz (Hz). SI unit of frequency, indicating the number of cycles per sec (c/s).

Hostile environment. An environment in which the lighting equipment may be subject to chemical, thermal or mechanical attack.

Hue. The term that most closely resembles our notion of 'colour', for example, red, green and blue. It is that quality of a colour that cannot be accounted for by brightness or saturation differences. An objective measure of hue is provided by the dominant wavelength of that colour's spectral power distribution.

Illuminance (E, units: 1). The luminous flux density at a surface, i.e. the luminous flux incident per unit area. This quantity was formerly known as the illumination value or illumination level. There are several illuminance-related terms used in lighting design. The lighting requirements for a specific application are described in terms of 'maintained illuminance'. Maintained illuminance is defined as the average illuminance over the reference surface at the time that maintenance has to be carried out by replacing lamps and/or cleaning the lighting equipment and room surfaces.

Illuminance ratio. The ratio of the levels of illuminance between a work area and adjacent areas.

Incandescent lamp. A lamp in which light is produced by a filament heated to incandescence by the passage of an electric current.

Indirect lighting. Lighting in which the greater part of the flux reaches the surface (usually the working plane) only after reflection at other surfaces, usually a roof or ceiling. Luminaires with a flux fraction ration greater than 10 are usually regarded as indirect.

Infra Red (IR) display. A display of the content of a visual image that is comprised from the infra-red area of the electromagnetic spectrum.

Installed power density ($W/m^2/100$ lux). The installed power density per 100 lux is the power needed per square metre of floor area to achieve 100 lux on a horizontal plane with general lighting.

Lightness. The perceived brightness of the colour. A (very approximate) objective measure of lightness is luminance.

Load factor. The ratio of the energy actually consumed by a lighting installation with controls over a specified period of time to the energy that would have been consumed had the lighting installation been operated without controls during the same period of time.

Local lighting. Lighting designed to illuminate a particular small area which usually does not extend far beyond the visual task, e.g. a desk light.

Lumen (lm). The SI unit of luminous flux, used in describing a quantity of light emitted by a source or received by a surface. A small source which has a luminous intensity of one candela emits a total of 4 lumens in all directions and emits one lumen within a unit solid angle, i.e. 1 steradian.

Luminaire. An apparatus which controls the distribution of light given by a lamp or lamps and which includes all the components necessary for fixing and protecting the lamps and for connecting them to the supply circuit. Luminaire has officially superseded the term 'Lighting fitting' which is still used colloquially.

Luminance (L, unit: cdm^2). The physical measure of the stimulus which produces the sensation of brightness measured by the luminous intensity of the light emitted or reflected in a given direction from a surface element, divided by the projected area of the element in the same direction. The SI unit of luminance is the candela per square metre. The relationship between luminance and illuminance is given by the equation:

$$\frac{\text{Illuminance } x \text{ Reflectance factor}}{\Pi}$$

This equation applies to a matt surface. For a non-matt surface, the reflectance is replaced by the luminance factor. The luminance of the sky (and other sources that cannot be visualized as surfaces) may be described in terms of the illuminance produced on a surface.

$$\text{Luminance of a small zone of sky} = \frac{\text{Illuminance on a surface facing sky zone}}{\Pi \text{ x Angular size of zone}}$$

Luminous intensity. Quotient of the luminous flux leaving the source, propagated in an element of solid angle containing the given direction, by the element of solid angle. The standard abbreviation is I and the SI unit is the candela.

Lux. The SI unit of illuminance, equal to one lumen per square metre (lm/m^2).

Maintained illuminance (E_m, unit: lux). The average illuminance over the reference surface at the time maintenance has to be carried out by replacing lamps and/or cleaning the equipment and room surfaces.

Monochrome (displays). Displays perceived as having hue but that use luminance alone to differentiate between pixel states.

Reflectance (factor) (R,). The ratio of the luminous flux reflected from a surface to the luminous flux incident on it. Except for matt surfaces, reflectance depends on how the surface is illuminated but especially on the direction of the incident light and its spectral distribution. The value is always less than unity and is expressed as either a decimal or as a percentage.

Saturation. The quality that distinguishes a hue from white. Pastel shades are de-saturated, vivid colours are saturated. An objective measure of saturation is purity.

Spectral power distribution. A function relating the amount of power in a light stimulus with wavelength.

Specular reflection. Reflection without diffusion in accordance with the laws of optical reflection as in a mirror.

Spot lamp replacement. A maintenance procedure where individual lamps are replaced only when they fail. Particularly with discharge lamps, this is likely to result in a large proportion of the lamps operating well below their optimum economic efficacy and therefore a greater number of luminaires will need to be installed to achieve the required maintained illuminance during the operational life of the installation. Some spot lamp replacement may be necessary when group lamp replacement is adopted to replace early lamp failure occurring between initial installation and the bulk lamp change.

Standard maintained illuminance. The maintained illuminance recommended for the assumed standard conditions of the application.

Standby lighting. Emergency lighting provided to enable normal activities to continue.

Task area. The area containing those details and objects that must be seen for the performance of a given activity, and includes the immediate background of the details or objects. In the absence of precise dimensions the task area is assumed to be a 0.5 m square, which is placed within a 1 m square surround.

Transmittance. The light passing through a surface. This is usually expressed as a percentage of the light incident.

Tristimulus values. In the CIE system, the amounts of the X, Y and Z primaries required to match a colour. The tristimulus values define a set of functions called colour-matching functions.

Uniformity (illuminance (U_E) luminance (U_L)). The ratio of the minimum illuminance (or luminance) to the average illuminance (or luminance) over a specified surface. The ratio usually applies to values on the task area over the working plane.

Uplighter. Luminaires which direct most of the light upwards onto the ceiling or upper walls in order to illuminate the working plane by reflection.

Veiling reflection. See Diffuse reflection.

Visual acuity. The capacity for discriminating between objects which are very close together. Quantitatively, it can be expressed by the reciprocal of the angular separation in minutes of arc between two lines or points which are just separable by the eye. The expression more commonly used for an individual's visual acuity is the ratio of the distance at which the individual can read a line on a standard optician's chart to the standard distance at which a person of normal sight can read that line (e.g. 6/12 means that the individual can just read at 6 m the line which a normally sighted person can just read at 12 m).

Visual angle. The angle subtended on the retina by the extremities of an object (see Figure 5.5:1). For example, if an object of size h is at a distance d from the retina the visual angle subtended, φ, is:

$$\phi = \arctan\left(\frac{h}{d}\right)$$

At normal reading distance, a 12-pt letter subtends a visual angle of 13'. The moon subtends a visual angle of 30'.

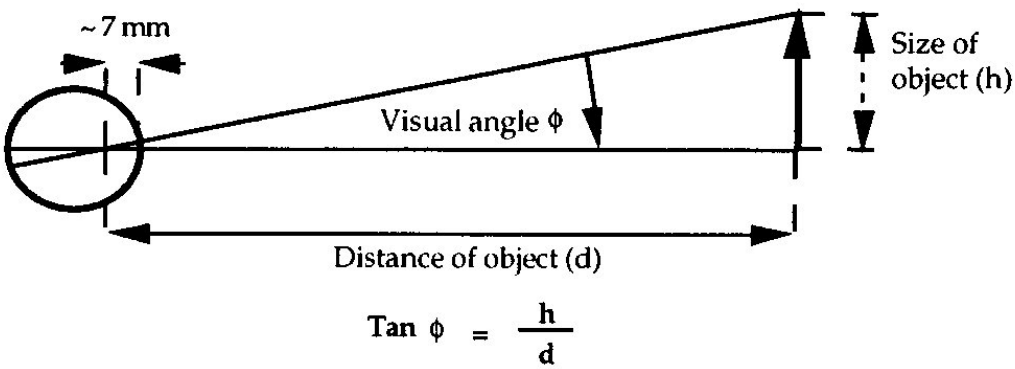

Figure 5.5:1: Visual Angle

Visual disability. A disability is any restriction or lack (resulting from an impairment) of ability to perform an activity in the manner or within the range considered normal for a human being.

Visual environment. The environment either indoors or outdoors as seen by an observer.

Visual field. The full extent in space of what can be seen when looking in a given direction.

Visual task. The visual element of the work being done.

Visual impairment. An impairment is any loss or abnormality of psychological, physiological or anatomical structure or function.

Working plane. The horizontal, vertical or inclined plane in which the visual task lies. If no information is available, the working plane may be considered to be horizontal and at 0.8 m above the floor.

5.6 References

[106] Allan, J.R., Brennan, D.H., Richardson, G. (1989). Detectability of Emergency Lights for Underwater Escape. Aviation, Space, and Environmental Medicine. Vol. 60, Issue 3, pp 199-204

[107] Boyce, P. R. (1997). Illumination. In Handbook of Human Factors and Ergonomics, Edited by G. Salvendy. John Wiley & Sons, New York, (2nd Ed).

[108] Boyce, P. R. and Rea, M. S. (1990) Security Lighting: Effects of Illuminance and Light Source on Capabilities of Guards and Intruders. Lighting Research and Technology **22**(2)57-79.

[109] Brennan, D. H. (1984). Visual Problems in Helicopter Operations. Royal Air Force Farnborough Institute of Aviation Medicine.

[110] BS EN 60598-1:2000. Luminaires. General Requirements and Tests.

[111] BS 5266-1:1999. Emergency Lighting. Code of Practice for the emergency lighting of premises other than cinemas and certain other specified premises used for entertainment.

[112] BS EN 55015:2001. Limits and Methods of Measurement of Radio Disturbance Characteristics of Electrical lighting and similar equipment.

[113] BS 5489 Road Lighting. Parts 1-10.

[114] BS 5499, Parts 1-6 and 11. Graphical symbols and signs, Fire signs and safety signs.

[115] BS 7671:2001 Requirements for Electrical Installations. (IEE Wiring Regulations. 16th Edition)

[116] CIBSE Code for Interior Lighting 1994. Chartered Institution of Building Service Engineers.

[117] CIBSE Lighting Guide 3. (LG3) The visual environment for display screen equipment use. (1996)

[118] CIBSEG 3 (1983). Lighting in Hostile and Hazardous Environments

[119] CIE (1978). Recommendations on Uniform Colour Spaces, Colour-Difference Equations, Psychometric Colour Terms No Supplement No 2 of CIE Publication No 15 (E-1.3.1). Bureau Central de la CIE.

[120] Defence Standard 02-587, Part 1:2001. Requirements for lighting systems, surface ships.

[121] Defence Standard 02-587, Part 2:2000. Requirements for lighting systems, submarines

[122] Electricity at Work Regulations 1989.

[123] Electromagnetic Compatibility Regulations 1990.

[124] Health and Safety (Display Screen Equipment) Regulations 1992.

[125] Hedgcock, R. E. and Chaillet, R. F. (1964. Human Factors Engineering Design Standard for Vehicle Fighting Compartments. US Army HF Laboratories.

[126] Helms and Belcher, C. (1991). Lighting for Energy Efficient Luminous Environments.

[127] HSG 38. Lighting at Work. Health and Safety Executive 1997.

[128] Kinney, J. A. S. (1968). Clinical Measurement of Night Vision. In Whitcomb M A and Benson w (eds). Symposium on the Measurement of Visual Function. Armed Forces/NRC Committee on Vision. National Academy of Sciences, Washington DC.

[129] Kobus, D. A. and Luria, S. M. (1988). At Sea Evaluation of Low Level White Lighting on Surface Ships. Naval Health Research Center, USA.

[130] ISO 9241-8:1998. Ergonomic Requirements for office work with Visual Display Terminals (VDTs). Part 8, Requirements for displayed colours.

[131] ISO 9241-3:1992. Ergonomic Requirements for office work with Visual Display Terminals (VDTs). Part 3, Visual Display Requirements.

[132] Lloyd, G. F. (1986). Cockpit Lighting Standards and Techniques for Use with Night Vision Goggles. Royal Aircraft Establishment.

[133] Lyons (1992). Lighting for Industry and Security: A Handbook for Providers and Users of Lighting.

[134] Littlefair, P. J. Innovative Daylighting: A Review of Systems and Evaluation Methods, Lighting Research and Technology 1990, **22**(1) 1-18.

[135] National Physical Laboratory (1994). Document on the Colorimetry of Visual Displays. Teddington: NPL.

[136] National Physical Laboratory Report QM 117. (September 1995). 'The Colorimetry of Visual Displays'. Available from NPL, ISSN 0309-3050

[137] MacDonald, L. W. and Lowe, A.C. (Eds). 'Display Systems, Design and Applications', Chapter 16: 'Measurement and Standardisation in the Colorimetry of CRT Displays'. p310-327, John Wiley ISBN 0471958700.

[138] Rash, C. E. and Verona, R. W. (1989) Cockpit Lighting Compatibility with Image Intensification Night Imaging Systems: Issues and Answers. Army Aeromedical Research Lab. USA

[139] Regulations for Electrical Installations 16th Edition. London Institution of Electrical Engineers (1992).

[140] The Workplace (Health, Safety and Welfare) Regulations 1992.

[141] Pinkus. (1988). Night Lighting and Night Vision Goggle Compatibility. Harry Armstrong Aerospace Medical Research Laboratory.

[142] Pinkus, A., Task, H.L (1997). The Effects of Aircraft Transparencies on Night Vision Goggle-Mediated Visual Acuity. Proceedings of the 35th Annual Symposium of the SAFE Association, Phoenix, Arizona, September 8-10, 1997. SAFE Association, Nashville, Tennessee. PP 93-104.

[143] Pinkus, A., Task, H.L (1997). Measuring Observers' Visual Acuity through Night Vision Goggles. Proceedings of the 36th Annual Symposium of the SAFE Association, Phoenix, Arizona, September 14-16, 1998. SAFE Association, Nashville, Tennessee. Pp 1-11

[144] Pinkus, A., Task, H.L., Dixon, S., Goodyear, C. (2000). Reproducibility Limits of Night Vision Goggle Visual Acuity Measurements. SAFE Journal Vol. 30, Issue 1 pp 131-139

[145] Pinkus, A., Task, H.L., Dixon, S., Goodyear, C. (1999). Reproducibility of Night Vision Goggle Visual Acuity Measurements Using Landolt C's. Proceedings of the 37th Annual Symposium of the SAFE Association, Atlanta, Georgia, December 6-8, 1999. SAFE Association, Nashville, Tennessee, USA.

[146] Pheasant, S. (1991) Ergonomics, Work and Health. Macmillan Publishers

[147] Salvendy, G (1997) Ed. Handbook of Human Factors and Ergonomics. 2nd Ed. Wiley-Interscience Publishers

[148] Sanders, M.S. McCormick, E.J. Human Factors in Engineering and Design. 7th Ed. McGraw-Hill Publishers.

[149] Silverstein,L. D, Lepkowski, J. S. Carter, R. C. and Carter, E. C. (1986). Modelling of Display Color Parameters and Algorithmic Color Selection. In Advances in Display Technology VI, **624** (pp 26-35). Los Angeles, CA.

[150] Stone, P. T. (1992). Fluorescent Lighting and Health. Lighting Research and Technology, **24** (2), pp 55-61.

[151] Task, H.L and Pinkus, A. (2003). Night Vision Goggle Objective Lens Focusing at Different Distances Using Artificial Objects, Natural Objects and the Hoffman 20/20™ Tester. SAFE Journal Vol. 31, Issue 1, pp20-26

[152] Vermeulen, J. (1992). Light Sources and CCTV Lighting Research and Technology **24**(2) 63-67.

[153] Waters, T. L. and Ivergard, T. A. (1983). A Study of Red and White Light on the Chart Table for Navigation at Sea. Ergonomics **26(4)** 349-358.

[154] Woodson, W.E. Tillman, B. Tillman, P (1992) Human Factors Design Handbook. 2nd Ed. McGraw-Hill Publishers

[155] Wyszecki, G and Stiles, W.S (1982). (2nd Ed). Color Science : Concepts and Methods, Quantitative Data and Formulae. . Wiley-Interscience Publishers

6 Human Computer Interface/Interaction [HFE5]

This technical area is concerned with Human Computer Interaction (HCI) and the design of computer systems that effectively and efficiently support people performing tasks. Areas of concern are user interface (UI) design through which the human and computer communicate and related equipment and data that impact the interaction process.

More specifically, this area covers health and safety requirements, flat panel visual displays, assessment methods and ergonomic requirements for office-based HCI. Interactive mechanisms are also covered (such as direct manipulation tools, form filling and menu driven UI's).

This area also covers ways to optimise the HCI by allocating appropriate multi-media to human mental modality. This ensures that information and tasks are designed to be intuitive and map with the human information processing system to reduce confusion and error.

Design principles and guidance are referred to and supplied. This area also covers the operating environment focusing on the design of control panels, suites and rooms for land, sea and air based systems.

There is considerable overlap with other technical areas, especially within the human factors engineering domain. Specifically, this Section overlaps with the following:

a. Verbal Communication [M4]
b. Sensory Characteristics [P10]
c. Psychological Issues [P11]
d. Information Displays [HFE8]

This Section was created in May 1996 and edited in August 2003.

6.1 Introduction

The UI, related equipment (interactive devices, such as keyboard, mouse, voice activated devices) and data provide the means by which people communicate with and drive computer systems. In particular, a poorly designed UI detrimentally affects interaction and can result in the system being avoided or not used at all.

To optimise human-computer interaction, the system must be intuitive, simple and clear, adapt to the individual, multiple, and changing user needs of that target population. The design of peripheral devices must reflect human expectations and be as simple and as clear as the task in question demands.

The criteria of a good UI, related equipment and data reflect established design principles and are summarised as follows:

1: Ensure consistency;

2: Provide shortcuts for frequent/expert Users;

3: Provide informative feedback;

4: Design dialogues to yield closure (i.e. to ensure a task is completed);

5: Provide simple error handling, prevention, recognition and recovery;

6: Allow easy reversal of actions;

7: Support user control;

8: Reduce short-term memory load (e.g. support recognition as opposed to recall);

9: Provide visibility of system status;

10: Reflect the real world experience;

11: Adhere to standards;

12: Provide help;

13: Structure tasks and information intuitively.

Information should be presented in a way that allows the User to extract information at the required level of detail. The exploitation of appropriate mental codes (analogue-spatial versus verbo-linguistic) and mental modality (verbal and auditory perception as distinguished from manual and voice response) will provide a multi-media UI that appears natural, is intuitive and seamless to the task.

6.2 Scope

Operational and non operational information presented here refers to any computer-based equipment procured by the MOD, and intended for operational use. For the purpose of this Part of the Standard, 'Computer-based equipment' is defined as computer technology which provides an interface between human users and related equipment or data. Such equipment may provide the user with access to information about the status of equipment, the environment, or other operational data. It also applies to equipment providing users with facilities to monitor or dynamically interact with equipment or data.

6.3 Health and Safety

The details contained within this Standard do not replace or take precedence over the "Health and Safety at Work Act etc (1974)". The requirements of this Standard and of the Health and Safety Regulations are to be seen as complementary.

6.4 Usage

This Part is intended to be cited on all projects in which operational computer-based equipment is being procured, and where the interaction between the system and the human users impacts the operational effectiveness of the equipment. This part describes requirements for a minimum set of documents to be developed and maintained throughout procurement and to support management of HCI development issues.

6.5 Applicability

This Part is intended to be used by those both within MOD and Industry who have involvement in HCI development. The principal target audience are those people directly involved in equipment development, including DPA project personnel and their supporting technical advisors, user representatives within the armed forces, and those involved in the design and development of defence equipment within industry.

6.6 Technical Guidance

6.6.1 HCI Design Process

6.6.1.1 Management of an HCI Development

This subsection identifies a minimum set of activities which are considered to be mandatory in the development of any defence equipment in which HCI is a significant factor. The subsection also provides general guidance on the principal technical issues involved in HCI development.

The subsection is split into the following sections:

Section 1: Introduction (6.6.1.1)

Section 2: Minimum set of mandatory activities which describes HCI activities normally expected to form part of an HCI development process (6.6.4)

Section 3: Details the requirements for quality and compliance (6.6.5)

The objective of setting out procedures and requirements in this sub-section is to ensure through a structured approach, the successful analysis, design and development of the HCI aspects of a system. These activities will provide a means of arriving at a reasonable and acceptable balance between the reduction of the risk and the cost of the work required.

The subsection describes the systematic application of risk assessment to Human Factors issues involved in the analysis, design and development of human computer interfaces. The formal identification of HCI Operability Risks is central to this process and is the principal means for establishing the extent of HCI specific work required in a system development. It also identifies HCI issues influencing the effective use of a system and summarizes the work required to provide confidence that these issues are adequately addressed in a system development.

A mandatory requirement for the Design Authority to conduct an HCI Operability Risk Assessment for each phase of a project is also described and can be applied to the procurement of Commercial-Off-The Shelf (COTS) equipment.

The guidance given within this document is intended to be independent from any specific development method and from any hardware or software environment. The content is intended to be sufficiently general to allow projects and design authorities to apply the Standard without prejudice to particular design solutions. A minimum set of activities normally required to develop effective HCIs is described.

6.6.1.2 Purpose

This subsection specifies requirements for the Human Computer Interaction (HCI) aspects of system development.

The purpose of this subsection is to influence the operational effectiveness of manned systems to ensure that the design of Human Computer Interfaces supports effective Human Computer Interaction. This can be referred to as the HCI Design Quality aspects of the system.

This subsection is intended to reduce the risk of computer-based systems being put into service in which the performance capability of the system's users results in the system failing to satisfy operability requirements.

Operability requirements addressed include the overall standards of system effectiveness, levels of user training, support and effort required to achieve those standards, and considerations of system availability, reliability and user acceptance.

HCI 'Considerations' relevant to procurement are identified and described. This sub-section identifies issues which typically need to be addressed during HCI development. Users of the Standard are expected to identify those issues which are relevant to the specific development, then apply appropriate consideration to those issues. Compliance with this subsection depends on demonstrating:

a. that the design issues relevant to a particular development have been identified
b. that appropriate consideration has been given to the issues
c. evidence of the consideration is documented and reflected in the HCI Design.

6.6.1.3 Design Team Responsibilities

The design team is responsible for planning and undertaking all activities necessary to ensure that the design of the Human-Computer Interface does not represent a risk to the operational performance, availability or reliability of the overall manned system. This includes responsibility for ensuring that all considerations relevant to the design and production of the HCI system cited in this Part have been adequately addressed.

6.6.1.4 Identification of HCI Related Operability Risk

The design team shall carry out an assessment to identify risks to the system's overall operational objectives which might arise through non-optimal design of the Human-Computer-interface. The level of detail in the risk identification shall:

a. be commensurate with the size, complexity and novelty of the system being procured

b. be appropriate to the complexity of the Human-Computer-interface

c. be commensurate with the range of users expected to use the system, including maintainers, training personnel and other relevant stakeholders

d. be commensurate with task complexity and expected demands to be imposed on the User.

A separate risk identification activity shall be conducted at each stage of a project life cycle. A report shall be issued prior to commencement of the relevant stage. It may be appropriate for such assessments to be included as part of the contractor's response to an invitation to tender.

The risk identification method will be determined by the Design Authority. Risk identification will include the following three requirements detailed in **Error! Reference source not found.** below:

RISK REQUIREMENT	DEFINITION
Identification of critical HCI risks	Defined as issues resulting in the design solution failing to accommodate one or more system objectives. Where there are no critical risks, this must be documented and substantiated.
Identification report detailing HCI critical risks	Each report to consist of: ▪ statement defining the nature of the risk ▪ information about operational objectives affected by a risk ▪ an estimation quantifying most extreme magnitude of risk (e.g. time to perform critical operations could take 100% longer than time currently planned to be made available) ▪ each risk to be prioritised in terms of impact on effective human-computer interaction and from a technological perspective
Identification of design decisions that affect HCI risks/requirements	To consist of: ▪ information substantiating the design decision ▪ identify activities in subsequent life cycle stages to address the risk when appropriate

Table 6.6:1: Risk Identification Requirements and Definitions

With regard to the scope of risk identification. Developing a system which meets its operational objectives can only be assured by integrating HCI analysis and design activities throughout the overall system analysis and design process. During risk analysis, the full scope of HCI requirements shall be addressed.

The top level system requirements (such as the need to reduce manpower, or the requirements to use commercial 'off the shelf' packages) shall be identified.

The risk identification due to non-optimal HCI systems shall explicitly address, but not be limited to, the following issues:

(a) overall system effectiveness

(b) initial and on-going training

(c) consequences of delayed implementation

(d) post implementation maintenance

(e) post implementation support

(f) pre-acceptance design changes

(g) post implementation design changes

(h) health and safety

The identification shall address both the cost, and the operability impact of HCI issues. The assessment shall be judged in accordance with Table 6.6:2.

Likelihood of Risk to System Objectives	**Severity of Risk**			
	Catastrophic	**Critical**	**Marginal**	**Negligible**
Very high	Level 4			
High		Level 3		
Moderate			Level 2	
Low				
Very Low				Level 1

Table 6.6:2: HCI Related Operability Risk Assessment

NOTE: Table 6.6:2: The 'levels' refer to levels of detail of involvement. Here, level 4 corresponds to the highest level of detail, whereas level 1 corresponds to the lowest level of detail. Also, the column referring to the 'Likelihood of ... Objectives' refers to the likelihood that non-optimal HCI design will result in failure to meet operational requirements.

6.6.1.5 The HCI Design Rationale

Where the results of the HCI Operational Risk Assessment indicate that aspects of the design of the HCI system represent a significant risk to system objectives, an HCI Design Rationale document shall be prepared and maintained during each stage of procurement.

The document shall record all considerations given and conclusions drawn including design decisions. The document will provide traceability of decisions made during the design process that affect the design solution. Traceability in general must be viewed in managerial as well as technical terms.

6.6.1.6 User Representation

Where a project involves HCI analysis, design or evaluation activities, the HCI development team shall be provided with adequate access to user representatives. User representatives are individuals having appropriate and recent user experience and training for them to be able to represent the interests of the target user population. Special consideration shall be given to the methods and mechanisms for communication between representative users and those involved in HCI development. User representatives need to have an appropriate level of authority.

NOTE: Many design problems arise from poor communication between the design team and the target users. From this, it is essential that the authority of User representatives is given credence and is respected by all involved in the design process.

6.6.1.7 Safety Considerations

Where a hazard analysis programme or a safety risk assessment (see Def Stan 00-56) is required in the development of the equipment, the HCI program shall identify the relationship and interface between the two programs.

6.6.2 Interaction

Appropriate consideration of the means by which Users interact with computer-based systems is essential to ensure efficiency and effectiveness of an HCI development. Considerations to be addressed cover:

a. principles of interaction,
b. presentation of information,
c. logical interaction,
d. physical interaction,
e. supporting facilities.

Where the Operability HCI Risk Assessment identifies critical HCI issues involved in an equipment development project, the Design Authority for each stage shall demonstrate that appropriate consideration has been given to each of these areas during:

f. the analysis and specification of HCI requirements
g. development of HCI design solutions
h. system introduction into service.

Details of the consideration in each of these areas shall be included in the HCI Design Rationale document.

Where Customer Off The Shelf (COTS) equipment is intended to be used for principally office-based tasks, it should comply with BS EN ISO 9241.

6.6.2.1 Desirable Characteristics

The system shall display the following characteristics to enhance human-computer interaction:

DESIGN CHARACTERISTIC	DESIGN CHARACTERISTIC DEFINITION
Suitability for the Task	An HCI is suitable for a task when it supports the user in the effective and efficient completion of the task.
Self Descriptiveness	An interface is self descriptive when each dialogue step is immediately comprehensible through feedback from the system, or is explained to the user on request.
Controllability	An interface is controllable when the user is able to initiate and control the direction and pace of the interaction until the point at which user goals have been met.
Conforms with User Expectations	An interface conforms to user expectations when it is consistent and compatible with the user characteristics such as task knowledge, education, experience, and to commonly accepted conventions.
Error Tolerance	An interface is error tolerant if, despite evident errors in input, the intended result may be achieved with either no or minimal corrective action by the user.

6.6.2.2 Principles of Interaction

It is essential that the principles underlying effective human-computer interaction are understood and applied consistently. Principles provide a unifying framework within which design decisions can be directed to provide a coherent HCI design solution. The principles discussed in this section are intended to be generic to a wide range of systems.

NOTE: Principles are intended as high level design guidance. They are not intended to be followed blindly or to be taken to their logical extremes. It will often be necessary to make trade-offs between the importance of applying a principle consistently against other functional and non-functional system requirements.

During each stage of procurement, the Design Authority shall demonstrate, through the HCI Design Rationale document, that consideration has been given to the Principles of Interaction.

During the feasibility stage, a set of 'Guiding Principles' for the design of the HCI shall be prepared based on principles identified in this section. The Guiding Principles shall be further refined and elaborated in later stages of the project, prior to detailed HCI design work being carried out. Where a principle applies to a procurement, examples of its application should be provided. Where a principle does not apply, an explanation should be provided.

6.6.2.3 Design for the Users and Their Tasks

The ways in which information is represented on an HCI and the style of interactive dialogue shall be based on knowledge both of task requirements and of relevant characteristics of the target user population. The HCI shall accommodate a range of abilities within the user population.

6.6.2.4 Task Characteristics

Task characteristics that shall be considered include:

a. level of criticality of user tasks
b. standards of performance and reliability required
c. relationships between different items of information and between information and control facilities
d. the extent of physical or mental demands which may be imposed on users while operating the equipment
e. relationships between HCI tasks and non-HCI tasks or tasks supported with other computer-based equipment
f. the conditions under which tasks are expected to be performed, including physical environment and task duration
g. special clothing or equipment

6.6.2.5 User Characteristics

User characteristics that shall be considered include:

a. visual capabilities (including visual screening of the user population)
b. degree of task and system-specific expertise
c. extent and regularity of system use
d. experience with similar equipment
e. user stereotypes
f. user expectations of the system

6.6.2.6 Understand the User's Conceptual Model

The design of an HCI should be based on an explicit representation of the expected nature of the user interaction. This is known as the 'HCI Design Model'.

Users of equipment develop a 'mental model' to form an understanding of the way a piece of equipment or a system works. This enables people to interact with different types of systems and equipment and is developed through training, familiarization and use of the equipment, experience and expectations and understanding of how the equipment actually works. This is referred to as the 'Users Conceptual Model'.

Similarly, system designers develop their own concepts and mental representations of the expected nature of the user interaction. These representations are rarely made explicit and may vary between different designers, and between a designer and that of the actual User.

In large development projects where many designers are involved with design aspects that impact the HCI. Each designer, working on a part of the system, is likely to develop their own mental model of human computer interaction that is inconsistent with that of other designers working on other parts of the system.

From this, operability problems typically arise due to inconsistent models of human computer interaction, and the way Users adapt/are taught to use a system may be different from that envisaged by designers.

The HCI Design Model shall be recorded in an appropriate format and shall be documented in the HCI Design Rationale. The Design Authority is responsible for ensuring that all individuals whose work impacts the HCI design are aware of and understand the HCI Design Model.

The HCI Design Model shall be expressed in a manner that directly lends itself to use as a training aid. If the Model cannot be easily explained and understood by representative users, it is likely either to be too complex or expressed using language and concepts with which users are unfamiliar. In either case it will not satisfy the requirement for use as a training aid.

During the HCI design process, the system shall be designed such that the appearance and behaviour of the HCI reflects the user's conceptual model.

This can be achieved by, for example by:

a. making the result of interactions visible prior to commitment
b. developing the user's model as an integral part of the training programme design

6.6.2.7 Use the User's Language

Words, symbols, colours, and concepts used in the design shall be familiar to Users. Standard English shall be used, and where necessary, technical terms or concepts that users can be expected to understand from training shall be adopted. Users should not be expected to learn computing terminology. Where necessary, description or reference to operations within the HCI should be based on words or expressions which describe the operation in simple everyday terms.

6.6.2.8 Simplicity

In physical and conceptual terms, the movements and actions involved in using an interface should be as simple and as direct as possible. The principle of simplicity refers to the level of experience and knowledge users require to use an interface, and the complexity of physical actions required to operate objects represented on the interface.

This also involves ensuring that the concepts used in the HCI relate easily to user experience and expectations.

The way in which information is displayed, including the complexity of language, and any specialist terminology used, should be easily understood by the target user population.

An HCI should be based on simple operations which can be combined in meaningful ways to produce more complex interactions. Complex keying sequences (e.g. Control and Shift and <Key>) should not be necessary to perform operations. They may be used as alternatives, or to provide rapid access to experienced users.

Direct interaction, where the user manipulates a pointing device (such as a tracker ball or light pen) to input instructions to the system is one of the simplest forms of interaction, draws on simple but continuous motor operations.

In WIMPS (Windows, Icons, Mice, Pull-down menus and Selection) style interfaces the principal concepts underlying most interaction involve one or more combinations of four basic concepts:

a. ‘select this’ (e.g. point and click to select an object);
b. ‘open this’ (e.g. double click on a selected object);
c. ‘put his there’ (e.g. select an object and drag it to a new position);
d. ‘do this to that’ (e.g. identify an operation – ‘this’ – and apply it to a selected item – ‘that’).

6.6.2.9 Transparency

Transparency is concerned with ensuring that the HCI does not interpose user and task. The design of the HCI should allow users to concentrate on achieving their immediate tasks, and should not require the user to concentrate on the details of interacting with the system.

6.6.2.10 Predictability

Having learned the underlying principles behind an HCI and the basic operations used to manipulate the system. Users should become able to predict what to do to achieve a desired effect, and, in general, how the HCI will respond to a user action.

Predictability is supported when the other principles, particularly consistency and simplicity are met, and when the user can relate to the system in terms of experience or training.

6.6.2.11 Consistency

Consistency supports the principle of predictability and should be applied to all elements of an HCI. The principle of consistency should be applied to the layout of screens, information coding, the dynamic behaviour of display elements, use of terminology and the sequence of dialogue steps necessary to perform operations.

Consistency requires that items which look the same behave in a consistent manner.

Consistency can be internal or external. Internal consistency is relates to elements within a program are consistent, whereas external consistency relates to the element conforming to expectation.

6.6.2.12 Follow Reality (External Consistency)

The way in which the HCI represents relationships between objects within the HCI, and the way in which objects within the HCI behave, should be based on the properties of objects in the real world.

To interact with the system, the user should be able to use their existing knowledge and experience of the real world. This should make it easier for the user to predict commands, or to interpret the state of the interface. (For example, if one object is placed in front of another, the one behind is obscured. In order to see the one behind, it must be brought to the front.) However, real world analogies should not be pushed to logical extremes. (For example, if an object in the interface is being ‘moved’, and is then accidentally ‘dropped’, it does not need to ‘bounce’ or ‘roll’ before coming to a stop!)

6.6.2.13 Avoid a Causality

The behaviour of the system should be wholly deterministic. Users should be able to clearly identify whether changes in the system have been caused by user action, changes in the state of the system, changes in the world, or by external equipment linked to the system.

6.6.2.14 Let the User Control the System

In most cases, the user should initiate and control the sequence and pace of interaction with the system. Allowing the system to initiate and control user interaction can be frustrating, and can lead to dissatisfaction and stress. It can also impact on the user's ability to maintain and improve skills and efficiency, and to maintain adequate awareness and understanding of system processes.

In a military system, careful consideration shall be given to the balance of control between the users and the system. In some situations, such as safety-critical operations, it may be necessary to violate this principal to ensure the safety and integrity of the overall system. To ensure that standard operating procedures are carried out correctly, it may be appropriate for the system to control the interaction.

6.6.2.15 Clarity

The principle of clarity addresses the ease with which the user develops and maintains an understanding of the state of the interface at any time. It includes a number of issues involved in transmitting information from the system to the user. These include the legibility of text, the clutter or density of information, the way in which screen areas are organized and the effectiveness of information coding techniques, as well as any special techniques used to attract user attention.

Clarity includes the principle of making the state of the system observable: i.e. ensuring that users can tell the state of the system from its visual appearance. For example, highlighting a selected object draws the user's attention to that object, and makes it clear that the system expects that object to be the focus of any immediate input activity.

Clarity is concerned with ensuring that the HCI clearly indicates:

a. what state the system is in (i.e. whether it is working, busy, waiting for user input, etc)
b. the options available to the user (i.e. controls available, as well as any which are usually available, but are not at the present time)
c. the state of data displayed (for example whether it is in the process of being edited or currently held by the system)
d. whether any special conditions exist (such as alerts, faults or safety critical processes).

6.6.2.16 Provide Feedback

Whenever the user interacts with the system, there should be clear feedback of what has been done and what the effect was. This applies to inputs of any type (such as pressing a key, moving a pointing device, actioning a field, selecting an option).

Visual and/or other feedback should be shown at the place where the action was taken, and immediately following the action. Generally, 'immediately' means within approximately 100 ms. where an action initiates a process or operation which involves a perceptible delay (longer than approximately 1-2 s). A visual indication should be provided showing that the process is underway, and, if possible, the state of the process and how long it will be until it is complete.

Where the system detects user errors, feedback on the error should be provided as close as possible in relation to time and proximity to where the error was made. Feedback should clearly indicate the nature of the error detected and, if possible, provide information to rectify the error. For example, if the data entry value to a field (e.g. MINIMUM) should be larger than the value in a related data entry field (e.g. MAXIMUM). The system should indicate which data entry field contains the error and provide guidance concerning acceptable values in that field.

6.6.2.17 Use Simple Concepts

The basic operations available to users shall be explained in simple language with which the user is familiar, and should not require special knowledge or concepts.

6.6.2.18 Interface Navigation

The user shall, at all times, be able to determine their present location within the structure of the interface, and to deduce the route to any other place. If an interface (or a menu) is structured hierarchically, or has a focal point providing access to all system facilities, a direct route to the top level or focal point shall be achieved with at most two keystrokes or selections.

6.6.2.19 Avoid Modes

Modes exist in an interface when an action has a different effect depending on what state the system is in.

In general, modes should be avoided and actions or commands should have the same effect wherever they are applied. In complex systems however, it may be difficult to avoid some instances of modes. If modes are used, their status shall be explicit, and the current mode shall be discernible to the user. Situations in which modes can be acceptable include:

a. long-term modes, where the user is likely to remain in a system mode for a period of at least some minutes. In this case, the layout of the screen, options available, and the behaviour of screen elements may be taken on properties which are specific to the particular mode. The underlying principles of the way the HCI works, such as the means of selecting options still apply, although details may be specific to the current mode.

b. alert modes, where the user is required to take some immediate action in response to an emergency or time critical event.

6.6.2.20 Directness

The system shall allow the user to interact directly with objects which are important to the user's task. Directness involves three major aspects:

a. ensuring that the interface shows the user objects which are of direct interest in performing tasks.
b. allowing the user to interact with the objects of interest without going through intermediate steps.
c. ensuring that when the user interacts with an object the result is shown at the place where the interaction took place.

Achieving directness does not depend on the use of a Graphical User Interface. The ability to spatially interact with objects which are represented visually has a very close correspondence with the way in which humans interact within the real world. As such, using a pointing device to interact with things of interest which are directly represented on the display may be as direct as can reasonably and reliably be achieved with today's technology.

Other HCI technologies, which have not yet reached maturity or commercial viability offer the potential for even more direct interaction. For example, speech input/output, gesture, eye control, and virtual displays.

6.6.2.21 Timeliness

Consideration shall be given to the system response time to user inputs and to complete operations. Timeliness is important in terms of enabling users to meet the required standard of system performance and in terms of user confidence and acceptance of a system.

The absolute time which will be acceptable for an system response is dependent on the overall system requirements and the performance standards required of user tasks. Response times which may be relatively slow are generally acceptable to the user provided:

a. the time taken to carry out a single operation does not vary by more than approximately 15%;
b. the time is appropriate to the perceived complexity of the operation being performed;
c. the response time is compatible with task requirements;
d. progress is indicated.

6.6.2.22 Forgiveness

The HCI should expect the user to make mistakes, and accommodate mistakes by:

a. by ensuring that all user actions are reversible, either by a single key press (e.g. UNDO), or by a simple reversal of the action taken.

b. by ensuring that the user does not unknowingly achieve a situation which is unrecoverable.

Users should be able to recover from simple mistakes without affecting the system or the work in progress. If the user requests a command or operation which is irreversible, the system should provide a prompt or a request for confirmation requiring explicit acknowledgement before proceeding.

The UNDO function supports the recovery from human error/mistakes and should be implemented where possibly. However, providing this functionality can have implications for system design.

Where an operation cannot be reversed, or is not easily reversible this should be made clear to the User. Where an operation can be reversed, this should also be made clear to the User and the User should be asked to confirm the operation before it is completed.

6.6.2.23 Allow Input Flexibility

The system should allow the users to enter data without having to mentally transpose the format. Also, systems should accept data in a number of alternative or incomplete formats. Consideration shall be given to the acceptance of synonyms, abbreviations and the use of direct and indirect operands.

6.6.2.24 Do Not Insist on Optimal Strategies

It is common during the HCI design process to base design decisions on the implicit assumption that users will always adopt optimal strategies for performing HCI tasks. This can result in these assumptions becoming embedded into the system design such that to use the HCI effectively, the user is required to perform optimally at all times.

The design of the HCI should allow users to adopt alternative strategies or methods for achieving objectives, even if these may be non-optimal. The formalisation of the user strategies and task flow should be used as walk-through criteria during user trials.

6.6.2.25 Allow for Intermission / Interruption

Military personnel are often required to address a number of objectives simultaneously. The design of an HCI should support users in adopting appropriate time-sharing strategies, allowing attention to be allocated between parallel tasks.

6.6.2.26 Minimize Demands on the User

The user shall not be expected to remember information or commands accurately and prompts shall be provided wherever practicable. The provision of memory aids like prompts is especially important in instances where users are expected to memorise and accurately input numbers or non-word text strings in excess of 5 characters. Users should not have to input information already in the system, especially when the user is aware that it is already in the system.

Human capacity for mentally storing, manipulating and recalling information accurately is limited to approximately up to nine ‘chunks’. (A ‘chunk’ can be individual digits or words, or meaningful combinations of digits or words.) Maintaining items of information in memory interferes with the performance of simultaneous verbal or spatial tasks and quickly creates the subjective impression that a task is difficult.

6.6.2.27 Minimize Keystrokes

The number of discrete user actions necessary to carry out an operation shall be kept to a minimum. For frequently used, or crucial operations, the operation should be achieved in not more than 2 keystrokes.

6.6.2.28 Information Presentation

The reader is referred to HFE8 for general principles for the design of information presentation and coding.

6.6.2.29 Logical Interaction Dialogue Styles

The term 'interaction', in the context of HCI, refers to the two-way exchange of information and commands between a computer system and its human users. This section provides guidance and recommendations on the principal dialogue styles used in military HCIs. The dialogue styles addressed are:

a. Question and Answer.
b. Form Filling.
c. Menus.
d. Command Language.
e. Query Language.
f. Natural Language.
g. Direct Manipulation.

6.6.2.30 Selection of Dialogue Style

The selection of dialogue style shall be based on considerations including:

a. the skills and experience of the target user population and the maximum amount of training expected to be required to achieve competence;
b. the nature of tasks to be performed. This includes the extent to which the sequence of user actions and format of user inputs is structured by task constraints, and the levels of speed, accuracy and reliability required;
c. the nature of the interactive technology available, including the size of display area provided and the control devices available;
d. dialogue style should be tested early on in the design process on a prototype system;
e. the nature of the systems and environment in which the HCI is required to be operated (systems for use in air, land, or sea will each impose different constraints on the choice of dialogue style).

The results of the considerations in the selection of dialogue style shall be documented in the HCI Design Rationale document.

6.6.2.31 Mixed Dialogues

A single HCI will often involve a number of dialogue styles. Form-filling interfaces, for example, often use menus as a means of providing access to system functions or, where fields can only accept data from a limited set of options. Similarly, a direct manipulation style of interface can often involve elements of menus, forms, and command languages. The selection and mixture of dialogue styles used in a design shall be appropriate to the target user group, their task objectives, and for the detailed dialogue tasks necessary to achieve those objectives.

Where mixed dialogue styles are used, the guidance provided in this clause shall be applied as appropriate.

Table 6.6:3 summarizes the principal advantages and disadvantages of each of the dialogue styles.

STYLE	ADVANTAGES	DISADVANTAGES
Form Filling	Can simplify data entry Requires modest training Shows context for activity Allows good mapping to task structure Supports local validation of data and input sequences	Can consume screen space Requires typing skills Requires good screen design
Question and Answer	Good for novice users Reduces training requirement Supports structured decision making	Generally requires more keystrokes than other styles Is generally slower
Menus	Support novice users Requires modest training Can reduce keystrokes Structures decision making Constrains input to valid options Available options can be tailored to current valid selections	Slows interaction, particularly for experienced users Can consume screen space Can require rapid system responses Naming of menu options, design of menu content and navigation structure non-trivial
	Reduces user error handling requirements Makes system facilities visible	
Command Languages and Query Languages	Supports flexibility in user interaction Supports user initiative Potentially rapid for complex tasks	Requires substantial training Difficult to remember infrequently used commands
Natural Language	User does not need to learn syntax Allows user to think directly in task domain Reduces training Potentially powerful, particularly when combined with direct voice input	Usually requires clarification by further interaction Generally requires more keystrokes Context can remain hidden Can imply a causality Can impose unexpected constraints on users

STYLE	ADVANTAGES	DISADVANTAGES
		Errors can be difficult to detect Technology immature with few current applications
Direct Manipulation	Close relationship between tasks, user abilities and HCI Visually represents the tasks Can be easy to learn and retain Errors can be minimized Can encourage exploration High Subjective satisfaction	Experienced command language users often experience difficulty transferring to direct manipulation interfaces (due to a lack of object-oriented ness) Requires correct identification of interface metaphor

Table 6.6:3: Summary of Dialogue Styles

6.6.2.32 Form Filling

Form filling interaction should be considered when a dialogue task involves a high data entry component and where flexibility is required in the way in which the user carries out a task. The technique supports the simultaneous and structured presentation of related data and controls, as well as the inclusion of optional and default data that may not be required to reach occurrence of that interaction. The presentation of data and functions in forms allows novice or moderately trained personnel to access the functionality and data in the system without incurring high error rates. The computer response can, however, appear to be slower than a command driven system.

Form filling dialogues should exhibit the following characteristics:

Meaningful titles. Each form should have a meaningful title.

Visually appealing. The layout of the form should be visually appealing and should be graphically balanced.

Visually distinct fields. All fields shall be visually distinct. Data fields shall be visually distinct from labels. Data fields which users can edit shall be visually distinct from non-editable data fields.

Logical grouping and sequencing of fields. Each form shall present its contents in a logical and sequenced order that supports the user's tasks. The layout of fields in a form should be such that data entry flows in a logical sequence, and is matched to the user's tasks and goals.

Group headings. Fields that are related to a single sub-task or activity should be related by a field group heading. Field group headings should be spatially or graphically related to the group. For example, the use of a containing box with the heading centred at the top.

Field labels. Each field within a form shall have a label which, through its positioning or appearance, clearly relates to the associated field. Field labels shall use terminology familiar to the user. Where special terminology, abbreviation or acronyms are used, these shall be consistent throughout the whole system.

Labels for equipment or tactical units shall use the names by which users are expected to refer to the equipment or unit in normal speech.

Where the units required to be entered into a data field may not be obvious, the expected or default units shall be indicated by a following label.

The labelling of control or action fields should clearly describe the action supported. Where units of measurement are to be entered, a secondary label shall be placed adjacent to the field. This label should conform to the accepted standard of measurement used by the users.

Related fields. Fields which are logically related (for example, because the range of data which is acceptable for the field depends on the value of data in other fields in the form) shall be grouped together, behave similarly and support interaction as a logical unit.

Convenient cursor movement. This is concerned with the method of moving quickly and conveniently between the field areas with the cursor presented to the user. On completion of editing a field, and where fields can be expected to be edited in a pre-defined sequence, the cursor should automatically be re-located to the next logical field in the sequence. The cursor shall clearly indicate the current edit point.

Comprehensible instructions. Each form shall present the user with a comprehensible set of instructions to guide the user in completing the form. Clear, concise prompts should normally be available for each field unless the content or effect is clearly obvious from the context, field content or field label. For data fields, prompts should indicate the type, format and, where necessary, constraints on the data required. The context and expected content of each field shall be indicated. For control or action fields, prompts should indicate the effect of selecting the field. Instructions should describe the consequences of critical actions.

Default data. Data fields should contain default data wherever logical defaults can be identified. Users should not be required to enter redundant data, undertake any data bookkeeping or enter the same data twice.

Data field editing. The point at which an edited field replaces existing data in the system shall be clear to the users, and shall involve a discrete action by the user (such as pressing an Enter key). Until an edit is committed to the system, users shall either be able to see both the original and the edited data, or be provided with a simple method for returning to the pre-edited data. Where a field contains data which has been edited, but is not yet in the system, the edit status of the field shall be apparent from the visual appearance of the field.

Alternative edit methods. As far as possible, alternative methods of editing data fields shall be provided. For example, these may be by typing, by menu selection or, in a direct manipulation interface, by pointing at the object from which data is required.

Error correction. The user shall be presented with a method of error correction for individual characters and entire fields. The visual appearance of fields which are detected as being in error shall be obvious, and differ from the appearance of non error fields.

Error messages. The user shall be presented with error messages for unacceptable values entered into the form. Messages should be presented on completion of editing a field, wherever logically possible, rather than on completion of the form. Validation should, where possible, be completed before the user is permitted to advance to the next entry.

Optional fields. Where option fields are used to support enhanced operation, the user shall be made aware that they are not essential.

Form-filling dialogues shall comply with BS EN ISO 9241, part 17 so far as considerations of military applications allow.

6.6.2.33 Question and Answer

Question and answer interfaces can be viewed as a special case of form filling interfaces. This style of dialogue is suitable where routine data entry tasks are required to be performed by inexperienced users. Considerations for form filling interfaces shall apply where they are relevant.

In general, the major difference between question and answer interfaces and form filling interfaces is the reduced level of control the user has over the dialogue sequence and the level of guidance which is provided. The interface should provide the user with the facilities to backtrack, abort, exit and where practicable, accept default settings.

Consideration shall be given to the level of guidance or explanation provided by the system, particularly where users may not understand the context or reasons for questions. This should be assessed against the user profile and task needs.

6.6.2.34 Menu Dialogues

In general, a menu dialogue style occurs in any situation in which a user is allowed to select one or more options from a range of valid alternatives. Menu dialogues should exhibit the following characteristics:

Use consistent terminology. Terminology in menus shall be consistent and meaningful to the intended users. The names of menus should clearly indicate the options contained within the menu. Menu names should be based on the language, expectations and training of the target user populations as specified by the customer.

Present the location. The design and appearance of menu hierarchies shall be such that the user is always aware of their current location in the overall menu structure.

Organization of menus. The content of menus, structure of the menu hierarchy and naming of menu options shall be based on an understanding of the organization of user tasks. For example, where menu items form natural or conventional groupings, or form groups which users can be expected to know, then items should be organized according to these groupings.

Use a broad, shallow structure. Menu hierarchies should be broad and shallow rather than narrow and deep. Where a hierarchical menu structure is necessary, users shall be provided with a clear indication of the current position in the hierarchy. Within a hierarchical menu structure, a single key action shall return the user to the level above.

Allow shortcuts for experienced users. The functions presented by the menu should be accessible by alternative short cut methods to enable experienced users to bypass sequences of menu selections. Where menu selection is undertaken by code, the code should be entered in a standard way consistently allocated throughout the system, and a letter which is easily related to the name of the menu option (e.g. **x** for e**x**it)

Show options not currently available. The presentation of functions and options should show any options not currently available within the present mode or state.

Provide a consistent starting point. The presentation should allow the user to start the selection process from a consistent point.

Provide rapid access to common options. The most commonly used options or groups of options should be placed near the position where the cursor is located when the user enters the menu.

Allow access to the main menu. Where a main menu exists, it shall be accessible to the user at all times.

Menu dialogues shall comply with BS EN ISO 9241, Part 14 so far as considerations of military applications allow.

6.6.2.35 Command Languages

Command languages provide more direct access to a system's functionality than other dialogue styles. They provide a powerful and flexible means for experienced users to interact with a system rapidly, with a minimum of constraints. They can, however, require considerable learning and experience.

Entry area. An appropriate entry area should be provided to allow the user to enter and visually confirm the command before actioning it.

Be tolerant of mis-spelling. The mis-spelling of commands should not cause errors through misinterpretation, through failure to execute a command, or through failure of the system to accept a sequence of commands.

Naming. Command names shall be unambiguous and should reflect both user tasks activities and user understanding of the operation of the system.

Abbreviations. The system should support the use of abbreviated commands. This can be achieved by either dynamic interpretation of the command on entry or by the use of predefined codes.

Non-recognition. If the system fails to recognize a command, a clarification message should be presented, with an indication of the most probable commands and their meanings.

Upper and lower case. The system should not discriminate between upper and lower case commands.

Command language dialogues shall comply with BS EN ISO 9241, Part 15 so far as considerations of military applications allow.

6.6.2.36 Query Languages

Are a specialized form of command languages with a dedicated domain of operation. Query languages are often used in database systems where users' tasks involve locating specified items of data. Query languages assist users in developing strategies for locating the required information. They are typically mixed dialogues involving combinations of menu selection, form-filling and command languages and direct manipulation. Where a query language is used, considerations for other dialogue styles shall apply where they are relevant.

Particular consideration shall be given to methods of supporting and guiding users in formulating search strategies. Suitable techniques can include:

a. displaying all the strategy nodes attempted and allowing the user to return to any node to apply a different strategy or
b. embedding a template of a strategy into the system to allow the user to query at a higher level.

6.6.2.37 Natural Language Dialogues

By exploiting everyday language as the means of communication between users and a system, natural language interfaces are potentially available to users with little or no prior training or experience, providing immediate access to a system's data and functionality. Currently, natural language technologies are not yet mature and have few general applications. However, natural language dialogues have been used successfully to allow users to formulate queries on database systems. The extent of application of a natural language interface depends on the size and sophistication of the vocabulary and language processing capability provided by the system.

Natural language dialogues should exhibit the following characteristics:

Task compatible vocabulary. The extent of the vocabulary understood by the system shall be sufficient to support user tasks and allow flexibility in the users input. The system should be capable of interpreting the meaning of words from the context both of the general interaction, and of the immediately associated words.

Task compatible grammar. The extent of the grammatical interpreter embedded in the system shall be sufficient to support the expected user population.

Task semantics. Both the computer and task semantics should be represented in a logical and structured way.

Clearly defined domain. The scope of the domain in which the system is capable of interpreting user inputs shall be clear from the context of the interaction and design of the HCI.

6.6.2.38 Direct Manipulation

Direct manipulation interfaces allow the user to interact with and manipulate objects and data, using basic perceptual-motor skills. They minimize the need for users to learn or use special skills or abstract methods to manipulate data or objects. Objects and data are presented and behave in a manner which is directly representative of real-world appearance and behaviour. Direct manipulation interfaces are typically based on visual metaphors of the real world.

Metaphors are a powerful means of conveying and supporting users in developing an appropriate conceptual model of the system. Direct manipulation interfaces are generally appropriate for applications which have a strong visual element or involve reasoning about, or manipulation of, spatial relationships between objects. They generally do not suit tasks that principally involve abstract or logical reasoning. Direct manipulation dialogues do not necessarily require a Graphical User Interface (GUI).

Direct manipulation dialogues should exhibit the following characteristics:

The design of the interface should be based around objects which are meaningful to users in the context of the HCI tasks they are required to perform.

Present visualization of objects. Objects which users are required to interact with shall be represented visually.

The facilities and methods by which users interact with data in the system should relate closely to the basic perceptual-motor abilities and skills of the users, and to the nature of the physical and cognitive tasks users are required to perform.

Rapid actions. The user shall be presented with a mechanism that allows rapid incremental and reversible actions by manipulating the objects presented in relation to one another.

Visible results. The effects of user actions on the interface shall be represented visually. Where possible, the visual representation (simulation or metaphor) and methods of manipulating the interface should conform to a coherent and consistent view of the real world and should reflect user objectives.

Gesturing. The use of physical gestures can be an effective method allowing users to execute functions and achieve results which are difficult or complex to express in concrete terms. Gesturing requires the system to interpret continuous spatial movements of a pointing device in terms of system functions. For example, the gesture can be used to represent the function 'Delete'. The gesture could instruct a function to select or apply a defined operation to all objects within the area indicated.

Gesturing has been shown to be effective with dedicated trained users, though it is less suitable for novices. Where gesturing is used then the set of gestures supported should conform to stereotypes in the user population.

Direct manipulation dialogues shall comply with BS EN ISO 9241, Part 16 so far as considerations of military applications allow.

6.6.2.39 Error Handling

Systems shall be capable of detecting errors of data or logic in the dialogue. Error messages shall be expressed in text format using clear, simple language, unless a more informative non-textual format has been demonstrated as more effective. Error messages shall be designed to ensure that the user is clear as to which part of an input led to the error. When multiple errors are covered by a single measure, the error message and associated visual effects should identify all errors covered by the message.

The content of error messages shall be kept as short and concise as is consistent with ensuring that users are clearly aware of the error. Users shall not be expected to refer to user manuals to interpret common interaction errors. All error messages shall, however, be included and expanded upon in the system documentation and in on-line help facilities where they are provided. When an error is detected, the system shall inform the user of:

a. the nature of the error;
b. where it occurred;
c. how to resolve it.

Errors may be shown as coded references where the error detected has not arisen as a direct consequence of the user input, or where the error is due to a fault in system hardware or software.

The status of error messages shall be clearly identifiable through their visual appearance, location or behaviour. Where possible, error messages should be positioned in close proximity to the item in error, or close to the user field of view. Where this is not possible, error messages should be presented in a consistent location. Techniques for attracting user attention to error messages should be used where the location of an error message may fall outside the user's prime viewing area.

The system response should ensure that errors of data or dialogue are detected and indicated to the user before the user is permitted to progress to the next phase or step in data entry.

6.6.2.40 Text Handling

Methods of text handling shall be considered and related to the objectives of user tasks. Text and data shall be protected against unintentional data loss, and allow recovery in the event of accidental corruption. These measures should be automatic where possible, and activated through explicit and consistent user action.
In the event of an action threatening data security, the user shall be warned by the use of a Message Dialogue Box. Consideration shall be given to methods of handling all predictable control entries, including the handling of incorrect control entries.

Text entry. During text entry design consideration shall be given to the variety of order and alternative formats in which the user may require to input text.

The system shall provide facilities to allow the user to handle the data quickly and easily. These facilities shall reduce the need for retyping of data and shall minimize reliance on particular formats while entering data. Consideration shall be given to the techniques such as 'Cut and Paste', 'Drag and Drop' of data objects and the context selection of data.

Users shall be provided with the following keys to support text entry:

a. backspace without deleting a character;
b. delete the previous character;
c. cursor keys:
d. end and home keys. The effect of each of these keys shall be clearly defined and visually apparent.

Standard word processing features. Where an HCI provides facilities for user entry and manipulation of continuous text, standard word processing features shall be provided. These should normally include:

a. facilities to insert and delete text at any location selected by the user;
b. facilities to select areas of text from individual characters, words, sentences, paragraphs or larger units;
c. facilities to search for specified items of text, and to search and replace specified items of text. As a minimum, search and replace criteria shall be able to be specified as text strings;
d. word-wrap shall be automatic, keeping whole words intact;
e. facilities to search for specified items of text, and to search and replace specified items of text. As a minimum, search and replace criteria shall be able to be specified as text strings;
f. unless otherwise specified, continuous text should normally be left-justified;
g. pre-defined standard formats should be provided;
h. on completion of an edit, users shall be able to specify whether to save changes as a new document or as changes to an existing document;
i. users shall be able to edit text without having to select a separate text editing mode.

6.6.2.41 HCI Response Times

The term 'HCI response time' refers to the time delay between the end of a user input and completion by the system of the associated operation including displaying the result. The term does not cover the time taken for the user to perform the actions leading to the input (these can be termed 'dialogue performance time'). The main issues affecting the acceptability of HCI response times are:

a. user expectancy;
b. consistency/variability;
c. compatibility with task requirements.

6.6.2.42 User Expectancy

The absolute HCI response times which users will find acceptable depends to a large extent on their expectations. User expectations are based on experience both with the particular system, and with other similar systems. Expectations also depend on user perception of the difficulty of the task the system has to perform. For operations perceived as trivial (such as displaying a character in response to a key press), any delay which interrupted the flow of action or thought would be likely to be considered unacceptable. For operations which are perceived as requiring the system to do some 'work', users expect and will accept some delay. The length of delay which will be considered acceptable depends on the perceived complexity of the 'work'.

NOTE: The users perception of the difficulty of a system task can be very different from the actual processing effort involved. For example, changing range on a radar display or sorting a table of data may be perceived by a user as 'simple' HCI operations. However, such operations can impose a considerable load on the system and are unlikely to be completed 'immediately'.

6.6.2.43 Consistency/Variability

The variability in the time it takes a system to respond to a single operation on different occasions is almost as important as the absolute delay on any one occasion. Variability shall be less than half of the average time to complete an operation and should be no more than 15% of the average time.

6.6.2.44 Compatibility with Task Requirements

HCI response times shall be compatible with task requirements. There is generally an upper limit (between about 0.1 and 0.2 s) beyond which users will be unlikely to notice or be affected by variations in HCI response times. There is little to be gained by increasing response times beyond this limit.

Some HCI tasks require more or less continuous interaction and demand high levels of concentration. Any system-induced delay which interrupts the continuous flow of such tasks is likely to be seen as unacceptable. Tasks of this type can be expected to require response times of less than 2 s for the great majority of operations. For tasks which are inherently intermittent or occasional, and where the user does not use the system intermittently, longer response times are likely to be acceptable.

In all cases, if the HCI response time is likely to exceed more than approximately 2 s, the system shall display an acknowledgement that the operation is in progress. If the delay is likely to exceed 15 s, an indication of delay shall be displayed. If possible, the current state of the operation or the estimated time to complete should also be displayed.

Table 6.6:4 summarizes considerations relating to gross ranges of HCI response times.
Table 6.6:5 indicates HCI response times which users will usually find acceptable.

RANGE(S)	CONSIDERATIONS
<2	Normal range of response times for most interactive tasks.
2 to 5	Too slow for continuous tasks requiring high levels of concentration
5 to 15	Too slow for interactive dialogue. Frustrates users in problem-solving and data entry activities. Long enough to allow the user to perform other tasks while waiting for the system to respond.
>15	Too slow for conversational dialogue. Message of expected delay should be displayed. User should be able to return to observe results without affecting or delaying other system processes.

Table 6.6:4: Summary of Gross Ranges of HCI Response Times. Refer to Reference [159] for further information.

TIME	ACTION – DISPLAY
<50 ms	From movement of pointing device to movement of cursor or marker.
100 msecs	Pressing a key to character being displayed.
200 msecs	Selection of displayed object (field, button, menu option) to object appearing as selected. Selection of menu header to menu being displayed. Selection of scroll button to completion of scroll of one line of text.
1-2 s	Completion of user input to display of error indication.
2 s	Request for next page of information to completion of one page change. Completion of user input to completion of simple process. Completion of display manipulation request to completion of display change (e.g. open a window; Zoom).
5 to 10 s	Completion of user input to completion of frequently performed complex operation.
>10 s	Completion of user input to completion of infrequent, complex process.
15 – 60 s	Request for loading or restarting. Formatting a diskette

Table 6.6:5: Examples of HCI Response Times Which Will Usually be Acceptable

6.6.2.45 Multi-User Systems

Where users work in teams, or conduct separate tasks using an integrated system, consideration shall be given to the additional complexities which may arise from team working. The system should support the co-operative working of users by providing mechanisms that assist the goal and objectives of the co-operative tasks.

Consideration shall be given to the communication requirements between users. Consideration should be given to the introduction of methods to support the sharing and transmission of information within the system.

6.6.2.46 Virtual Environments

Virtual environments are created when computer-based systems are used to provide users with artificial stimulation in three dimensions. They often involve two or more sensory modalities. These environments also allow users to interact with the simulated environment in three dimensions and in more or less real-time. By monitoring the users head, body, hand or eye positions the computer-system responds to the users behaviour and updates the simulated environment to create the perception that the user is moving within the virtual world.

Virtual environments have been used for a number of years in training simulators, and are now being considered for live applications. Where virtual environments are to be used, the key visual stimuli of a given task shall be identified in order that consideration can be given to the viewing distance, makeup and supporting context for each object. The key stimuli identified should be given priority in any scene management to ensure support for the task(s) takes priority.

6.6.2.47 Safety Critical Systems

This clause provides an overview to the major HCI related considerations of a safety critical system. For further information regarding safety critical systems, refer to Def Stan 00-55 and Def Stan 00-56.

6.6.2.48 Operator Workload

The Design Authority shall assess the risk that errors occur as a result of excessive workload. This consideration will include but not be limited to:

a. The user's non-HCI tasks.
b. System objective driven tasks and activities.
c. Screen management activities.

Where operator workload is identified as representing a significant risk to the system's operation requirements, consideration shall be based on a systematic workload analysis. It shall also be explicitly addressed during user trials.

6.6.2.49 Operator Reliability Analysis

Appropriate activities for identifying and evaluating the reliability of user interactions with the system shall be applied. This may include assessment of the probability of each type of user error occurring, and the potential consequences. This consideration will include, but not be limited to:

a. Communication with other users.
b. Assessment of data presented to the user.
c. Inconsistencies between system and users conceptual models of the system.
d. Task errors.
e. Activities errors.

To ensure that the appropriate level of integrity has been built into the system, consideration shall be given to the consequences of an HCI error. This consideration shall include, but not be limited to:

f. Error recovery activities.
g. Error recovery times.
h. System commitment.
i. Potential secondary errors.

Where it is required, the consideration of human reliability shall be based on a systematic analysis that identifies, quantifies and categorizes potential user errors. This analysis shall be related to the analysis of HCI-induced workload. Methods for assessing human reliability are described in Kirwan (1994).

6.6.2.50 Physical Interaction

In developing an HCI for military equipment, it is essential to address aspects of the physical interaction and environments in which users are expected to operate the system. These considerations will often produce major issues which influence and constrain an HCI design. Equipment to be used on a ship's bridge, or in a tank, for example, will impose major constraints on the selection of control devices, as well as on the choice of dialogue style and the way in which information is organized and presented.

6.6.2.51 Workplace Design

In laying-out workplaces, consideration shall be given to the organization of individuals into teams and sub-teams, and requirements for co-operation in the use of computer-based systems which may arise. Workplace layouts should support requirements for communication between individuals and support the allocation of responsibilities between team members.

6.6.2.52 The Environment

Noise, motion, vibration and shock, light, heat and cold and NBC conditions, barometric pressure and, ventilation, if not properly considered and controlled, can adversely affect the performance of manned systems. Parts HHA 1- 8, HFE6 and 8 of this Standard provide detailed guidance on the effect of environmental factors on human performance.

At all stages in the development of an HCI, the Design Authority shall demonstrate that adequate consideration has been given to the physical environment in which equipment is to be used. The selection of interactive devices, presentation of information and the design of the interactive dialogue shall, as far as reasonably practical, ensure that environmental conditions do not unduly degrade user performance.

In general, high levels of any environmental stress can affect the health and safety of individuals. They may also impair cognitive performance, distract attention from a task and may cause users to adopt less than optimal performance strategies. The following list briefly summarizes some of the specific issues (not including health and safety concerns) associated with environmental stressors:

a. Acoustic noise. Can increase stress and interfere with communication and mask acoustic signals.

b. Motion and vibration. Motion and vibration can cause discomfort, and impair the ability to read text and perform manual manipulations.

c. Lighting. The lighting environment can impact on the design of computer displays in a variety of ways, including reducing contrast between display elements, and affecting the levels of luminance at which displays will cause visual discomfort. The lighting environment is a principal consideration in designing colour displays. Displays designed for a particular lighting environment (such as white light) may be ineffective under different lighting conditions.

d. Extreme temperatures. Cold and hot conditions and humidity can cause fatigue and make it difficult for users to concentrate. The potential impact of protective clothing including the NBC IPE on mobility and the respirator on visual capabilities should be addressed.

e. Barometric pressure. Consideration shall be given to the effect of barometric pressure on human performance. For example, high altitude effects such as hypoxia can have adverse affects on performance.

f. Ventilation. Consideration shall be given to the quantity, quality and velocity of ventilation in the workplace/space. The air flow shall not be directed to the rear of the user, and shall be, where practical, directed to the front of the user.

g. Combined stressors. Consideration shall be given to the effects of combined stressors (such as high levels of noise and vibration which may occur in cross-country vehicles). For further information see HHA1.

The design team shall demonstrate that consideration has been given to environmental issues in the selection, development and evaluation of HCI devices and the development of HCI designs. Where necessary and justified by the potential impact of environmental issues on the effectiveness of an HCI, user trials shall be carried out under realistic environmental conditions as part of the system evaluation process.

6.6.2.53 Workstation Design

The design of workstations to support computer-based work shall comply with the guidance provided in section HFE3 of this Standard. BS EN ISO 9241specifies requirements for the layout of workstations in office environments.

6.6.2.54 Workstations and Consoles

Workstations and consoles shall comply with relevant Health and Safety legislation, with the guidance within section HFE3 of this Standard and, where applicable, with the requirements contained within BS EN ISO 9241.

Workstation layout. Users shall be able to locate the most frequently used control devices with a minimal amount of visual guidance. Repetitive groups of controls should have similar spatial arrangements. For further information see part HFE3 of this Standard.

Prolonged use. Prolonged operating periods, particularly under one or more environmental stresses, including the effects of sleep loss, can impair mental and physical capacities. In the design, selection and implementation of HCI workstations and devices, consideration shall be given to the potential impact of prolonged operating periods on user performance. Aspects such as dynamic muscle loading, and the speed and accuracy of locating and manipulating control devices and performing critical dialogue tasks shall be addressed. Visual degradation including eye strain, repetitive control, operation of data entry devices such as keyboards shall be avoided by providing VDU operators with satisfactory off watch keeping periods.

6.6.2.55 Hand Held Terminals

Where hand held terminals are to be used, consideration shall be given to the size, weight and shape of the device, to ensure they are appropriate to the user population, conditions of use and tasks to be performed. Consideration shall be given to the design of the interactive software of such devices to ensure they are appropriate for use in the expected conditions and environments. For example, hand-held terminals intended for use on ships may require operation in heavy seas while standing. The illumination of the screen may also require special consideration.

6.6.2.56 Protective Equipment Constraints

Consideration shall be given throughout the design process to constraints which may arise through the wearing of protective equipment or restraints. Equipment to be considered should cover, for example, NBC clothing and combat body armour, fire safety equipment, in service respirators, breathing apparatus, or constraints imposed through safety harnesses and seat belts. This shall take into account restrictions on body movement, manual dexterity, vision, and the mobility and agility of the user when wearing such equipment. Where protective equipment may be worn while using the equipment, this shall be replicated during the process of validating the HCI design.

6.6.2.57 Support Facilities

Consideration shall be given to the integration of embedded training functionality into the system. For further information see Defence Standard 00-25 Part 20 T4 (Guidance on Training and Instruction).

While in training mode, users shall be made aware that training mode is active. This will be done in a clear and unambiguous manner. Failing to ensure user awareness of training mode activity can impact on the safety and integrity of the system.

Consideration shall be given to handling real alerts while in training mode. The status of real system alerts which are presented to users in training mode shall be unambiguously identifiable.

The system shall provide the training supervisor/instructor with a means to view global scenario data as well as the data being presented to individual trainees. For further information regarding training systems and the training needs analysis process refer to Def Stan 00-25 Part 20 T4.

6.6.2.58 System Documentation

Consideration shall be given to the production, content and presentation of the documentation provided with the system. The user documentation should be in a different volume to the system documentation. The structure of the documentation shall follow the envisaged tasks to be undertaken by the users of the system. This will include, but not be limited to the following sections:

a. Start up;
b. Key concepts;
c. Task procedures;
d. Explanation of errors;

e. Maintenance.

The text within the documentation should reflect on-line help text and should be cross referenced to the on-line help where appropriate. As a minimum, the documentation shall provide a description of each logical screen area, the design metaphor, a description of the expected concern and context of each displayed object.

The presentation of the documentation should comply with the guidance found in the Department of Trade and Industry's "Instructions for Consumer Products".

6.6.2.59 User Support

User support facilities, including on-line help, shall be provided as an integral component of the system. User support facilities shall include, as a minimum, appropriate Prompts and Error messages, User Manuals, and may include on-line HELP. Requirements for Prompt and Error Messages are covered elsewhere in this clause.

6.6.2.60 On-Line Help

On-line help facilities shall not simply be implemented as on on-line version of a user manual. Help facilities shall, as far as possible, be context sensitive and shall be accessible to the user at all times, unless the system is in training mode. In training modes, the availability of Help should be at the discretion of the training instructor.

Where it is provided, on-line help shall provide the user with the ability to:

a. access information appropriate to the current selection, displays or part of the system with which the user is currently interacting;
b. access information on specific topics based on a key word search;
c. view an index of topics;
d. obtain information on how to carry out specific dialogue tasks;
e. obtain access to a dictionary of abbreviations and acronyms.

Each separate item in the Help facility shall provide the user with relevant information on the topic addressed. As far as possible, information shall be structured such that it is based around user tasks or elements of the HCI.

The presentation of Help statements shall be such that the user can view the contents whilst interacting with the dialogues to which it refers. In complex situations, Help statements should reference other relevant material, such as the user manual or training material.

All material presented within online Help shall also be available in supporting system documentation.

6.6.2.61 Help and Error Messages

Shall be constructed to support and educate the user in regard to the system architecture and functions and should be structured to take account of user knowledge. The presentation of messages shall be informative, positive to the user (Active Voice), meaningful, presented in a simple structure, and complete (requiring no additional searching).

Each message shall contain information at a minimum of two levels, with the first level being a summary, and the second providing detailed descriptions and instructions to guide appropriate user actions. Where the message is related to an error, the second level should provide information instructing the user how to correct the error.

Error messages should be structured as follows:

a. General principles, and information relevant to the wider context which users may need to learn about the system or HCI, should be at the beginning.
b. Explanation of the specific topic, where necessary, should be in the middle.
c. Items to be recalled to resolve the immediate issue should be at the end.

If an error requires a complex set of instructions to correct it, then it shall be possible for the user to view and carry out the instructions simultaneously.

6.6.3 Interface Requirements

6.6.3.1 Input and Control Devices

This Section identifies considerations relating to the use of input and control devices for military HCIs. The Section summarizes characteristics of commonly used devices, and provides guidance on issues which need to be addressed in selecting and implementing devices for computer-based equipment. The Section particularly emphasizes considerations which may be controlled or affected by the design of HCI software. The guidance contained in this Section applies to both physical devices as well as to representations of devices implemented on computer displays, where appropriate.

Input and control devices shall comply with the general guidance and requirements contained in Parts HFE6 and 9 of this Standard.

In selecting, designing and implementing input and control devices, the Design Authority shall provide evidence that relevant Human Factors issues have been identified and that appropriate consideration has been given to them. Results of these considerations shall be documented in the HCI Design Rationale document.

Further information. For further information regarding input and control devices refer to Def Stan 00-25 Part HFE6. Detailed requirements and recommended test methods for control devices can be found in BS EN ISO 9241 Part 9 for non-keyboard input devices).

6.6.3.2 Guiding Principles

The following guiding principles shall be considered during the design, selection, implementation and evaluation of input and control devices.

a. the assessment and testing of HCI devices shall be based on production standard equipment, and shall involve real or representative workplace layouts, environmental conditions and task requirements. Assessments should address both the physical characteristics of the devices used as well as those aspects affected by system design considerations (such as the sensitivity of pointing devices);

b. where the combination of devices could impact on the individual efficiency of one device a trade-off analysis shall be carried out in the context of the workplace and task requirements.

6.6.3.3 Device Characteristics

Input and control devices shall exhibit the following characteristics:

a. be appropriate to the characteristics of user tasks, including the frequency, importance, sequence, and urgency of use, required standards of tasks performance and the environmental conditions in which tasks are expected to be performed;
b. be self descriptive in the context of the task and environment;
c. be consistent with user expectations in function and use;
d. be resilient to inadvertent operation or misuse;
e. support learning and promote transfer of skills between devices;
f. promote efficiency and comfort in usage;
g. be safe and stable in normal working practice and avoid sharp edges and corners;
h. provide adequate feedback;
i. minimize both mental and physical demands on the user and minimize static muscle loading;
j. take into account the position of the input device on the work surface in relation to other devices, including, where necessary, requirements for locating and operating devices without visual guidance;
k. be easily maintained.

6.6.3.4 Selection

When selecting input or control devices, consideration shall be given to the nature of the users and their tasks, any physical constraints (such as whether the space available will provide adequate arm support), the operational environment and possible interference between HCI devices and other non-HCI related tasks and activities expected to be performed by the users. Consideration shall also be given to the context of the HCI dialogue tasks in which devices are expected to be used, and to the combination of input devices which may be involved. (For example, dialogue tasks may require a user to identify an object (using a pointing device), apply a function (which may require a function key) and enter data (possibly using a keyboard).

Table 6.6:6 summarizes general characteristics of a range of common input devices with respect to generic dialogue tasks. The table indicates the extent to which each type of input device is appropriate for the various types of dialogue tasks.

Device Type	DIALOGUE TASK					
	DATA ENTRY	HIGH PRIORITY FUNCTIONS	DRAWING	OBJECT SELECTION	CONTINUOUS CONTROL	CURSOR POSITIONING
Alpha-numeric keyboard	High	Low	Low By defining data points in a form	Low Very Indirect	N/A	Low Very Indirect
Function Keys	N/A (Though can input default data)	High	N/A	N/A	N/A	N/A (Though can be used to reset cursor position)
Mouse	Medium Discrete choices	Medium By object selections	Medium Limited resolution	High Depends on sensitivity and object size and Location	Medium Depends on task and sensitivity	High Depends on sensitivity
Joystick	Medium Discrete choices	Medium By object selection	Low Limited resolution	Medium Depends on dynamics and object size and Location	High Depends on task and dynamics	Medium Depends on dynamics
Tracker-ball	Medium Discrete choices	Medium By object selection	Low Limited resolution	Medium Depends on dynamics and object size and Location	Medium Depends on task and dynamics	Medium Depends on dynamics
Light pen	Medium Discrete choices	Medium By object selection	Medium Limited resolution	Medium Suitable for Large and dispersed objects	Low Depends on task and sensitivity	Medium Not suitable for fine positioning
Tablet	Medium Discrete choices	Medium By object selection	High	Medium Depends on object size and Location	Low Depends on task and sensitivity	High
Cursor keys	N/A	Low Slow positioning	Low Low resolution	Medium for Data fields Low for graphics	Low	Medium for Data fields Low for graphics
Touch screen	Medium Discrete choice	High	Low Very Low resolution	Medium Suitable for Large objects	N/A	Low Low resolution
Voice	Low Useful for restricted data sets	Medium Not suitable for critical functions	N/A	Low	No	Low Possible, though slow and inaccurate

Table 6.6:6 Summary of HCI Input Devices for Generic Dialogue Tasks

Table 6.6:7 summarizes some general considerations in the selection of input and control devices.

TIME	ACTION – DISPLAY
<50 ms	From movement of pointing device to movement of cursor or marker.
100 msecs	Pressing a key to character being displayed.
200 msecs	Selection of displayed object (field, button, menu option) to object appearing as selected. Selection of menu header to menu being displayed. Selection of scroll button to completion of scroll of one line of text.
1-2 s	Completion of user input to display of error indication.
2 s	Request for next page of information to completion of one page change. Completion of user input to completion of simple process. Completion of display manipulation request to completion of display change (e.g. open a window; Zoom).
5 to 10 s	Completion of user input to completion of frequently performed complex operation.
>10 s	Completion of user input to completion of infrequent, complex process.
15–60 s	Request for loading or restarting. Formatting a diskette

Table 6.6:7: Summary of Considerations Relating to the Selection of HCI Print Devices

6.6.3.5 Feedback

Input and control devices shall present the user with feedback in an appropriate format, level and type and when and where it is expected. Feedback should be such that the user is confident:

a. when the control is activated and;
b. that the use of the device has produced the expected response.

Appropriate feedback can involve the properties of the device itself (i.e. its physical, mechanical and acoustic response), of the hardware and software interfacing with the device, and of the software controlling the display of information to the user.

6.6.3.6 Non-Standard Keyboards

Non-standard keyboards shall comply with the guidelines in part HFE6 (Controls) of this Standard and, where appropriate, with requirements imposed under relevant Health and Safety legislation. Where non-standard keyboards are to be used in addition to a standard keyboard, they should be designed to be compatible to the Standard (e.g. the same angle, level, colour and range of adjustment).

6.6.3.7 Layout of Keys

Consideration shall be given to the layout of any dedicated keys or controls on a non-standard keyboard such that they are grouped in a logical way. Function keys should be easily distinguished from others and clearly labelled. Where keys have a major, irreversible or catastrophic effect, special consideration shall be given to their design and implementation to minimize the likelihood of inadvertent operation. Numeric keyboard layouts shall be consistent throughout the entire military workplace. (NB Both keyboard and telephone numeric layouts shall be designed into the same workplace).

6.6.3.8 Use of Modifying Keys

Modifying keys should be used to provide an alternative means of accessing existing functions. Consideration shall be given to the importance, criticality and frequency of the action in the allocation of functions to dedicated or combinations of key presses. No more than three simultaneous key presses should be required to use a modifying key.

6.6.3.9 Display Devices

Display devices shall comply with the guidance given in Part HFE8 (Visual Displays) of this Defence Standard. Displays should normally comply with the relevant Parts of BS EN ISO 9241 (Parts 3, 7 and 8) unless the type of display or conditions of use are such that the Standard does not apply.

In selecting display devices, the Design Authority shall provide evidence that relevant Human Factors considerations have been identified and that appropriate consideration has been given to them. Results of these considerations shall be documented in the HCI Design Rationale document. The Design Authority shall also identify and document constraints (such as the number of colours which may be used in a design) which the selection of display devices or device drivers may impose on the design of the HCI.

In addition to satisfying the general requirements for display devices. These display devices shall exhibit the following characteristics:

a. Be appropriate to the quantity, format and dynamic nature of the information to be displayed. Screen size should be determined by the amount of information required to be viewed and take into account the viewing distances and angles of all relevant users.

b. Provide the minimum of constraints on the presentation of information and style of HCI dialogue.

c. Physical characteristics (such as the size of pixels or images) should not reduce the ability to identify and discriminate graphic objects or their colour.

6.6.3.10 Visual Display Devices

Unless superseded by the specific requirements for a system, display characteristics shall ensure that users:

a. do not perceive any disturbance flicker;
b. can adjust the contrast ratio between 5:1 and 10:1;
c. can adjust the display luminance over a range which is appropriate to the operational environment and conditions.

NOTE: In normal office-type environments, this will be between 80 cdm^2 and 160 cdm^2. Military environments ambient light levels maybe more extreme (see part HFE4 of this Defence Standard).

d. do not perceive a persistence lag in a changing image;
e. do not perceive reflectance glare in the surface of the display;
f. do not perceive a scan line or matrix spots.

If no adjustment of the display is possible, practical or desirable during operation then the default settings should conform to the above.

6.6.3.11 Colour Rendering

The display device shall render colours to ensure;

a. colour uniformity across the display device;
b. minimal colour mis-convergence;
c. consistent character height and object size;
d. good colour discriminability;
e. minimal background and surround image effects;
f. minimal chromostereopsis or other unintended perceptual effects.

6.6.3.12 Multi-Screen Systems

Multi-screen systems can be considered to be of two general types:

a. systems with two or more distinct physical displays, and
b. systems in which a single display screen is organized into two or more areas which are used for clearly distinct purposes (such as distinct graphical and alphanumeric areas).

As well as increasing the amount of display area available, systems which use two or more physically distinct displays provide a number of advantages, such as:

c. individual displays can be configured to specific users and uses;
d. displays can be tailored to different viewing conditions (such as sitting and standing users);
e. they can support the users conceptual model of a system by helping to emphasize differences and relationships between information and sources.

There are two main ways of making use of physically distinct screens:

f. all screens are integrated to provide an increased display area, and
g. one or more screen is dedicated to interaction, and the others are used solely for the presentation of data.

Where multiple screens are used to increase display data, consideration shall be given to using a single higher resolution screen with suitable information presentation, structure and coding techniques to replace the multiple screens.

Where the screens work as one system consideration shall be given to the physical positioning, alignment and spacing of the screens. The organization of data and controls between screens should be designed to ensure that no set of data or control which any of the systems users may need to use to carry out a single short-term task is spread over two or more screens. Where the screens are used by a single user, the monitors shall be positioned relative to the user such that parallax effects do not occur.

Consideration shall be given to the design of the dialogue by which the user accesses information on different physical screens or logical display areas. For example, selection of an object or data on one screen should be clearly reflected on all screens in which the selected object or data is represented. Where it is possible for data on different screens or display areas to show different values for the same data item, (for example where the user edits data on one screen), the status of the data on the different screens needs to be clearly represented.

The design of multi-screen systems shall ensure that the relationships between the various screens and between the screens and the equipments or objects they represent are clear. This can be achieved through the appearance and physical location of screens and the dynamic behaviour of items represented on the screens. Where appropriate, and particularly where the type of data or display on a screen can vary, each screen or logical area should be clearly labelled.

In all cases consideration shall be given to increased screen glare and the effect of multiple radiation (EMR) and additional light sources. General requirements for individual displays shall apply to all displays used in a multi-screen system.

6.6.3.13 Audio or Speech Display Devices

Consideration shall be given to the use of audio or speech devices to support the transfer of data and the awareness of the user to system condition and states. The use of audio code should be in line with the requirements alarm policy for specific auditory signals. See part HFE8 (Auditory Information) of this Defence Standard. For more detailed information the reader is directed to Reference [157].

Where audio or speech devices are used the design shall allow the user to test the audio facilities so that they can ensure that they are still working. The design of the audio display codes should preclude the user from misinterpretation or confusion of other codes.

Consideration shall be given to the design of the audio or speech device so that the audio signal;

a. does not startle users;
b. is easily audible above background and transient noise;
c. is discernible and distinguishable from other devices in the area of operation. For details see part HFE 8 of this Defence Standard.

6.6.4 Essential HCI Development Activities

The development activities that ensure effective human-computer interaction for the operational military domain depend on a range of factors throughout development. Such factors include:

a. nature, complexity and novelty of a particular system;

b. requirements for inter-operability between equipment/systems;

c. extent to which operational effectiveness is dependent on Users.

Development of operational military equipment/systems will include the following activities where appropriate:

d. HCI requirement analysis;

e. conceptual design and rapid prototyping;

f. user trials and operator workload analysis.

HCI development activities should lead to the production of a set of documents controlling and defining the HCI development process. The following documents, or their equivalents shall be produced

g. an HCI Risk Identification Report;

h. an HCI Development Plan;

i. an HCI Requirements Specification;

j. an HCI Design Rationale and Specification;

k. a User Evaluation Report.

The trials may use experts and/or representative personnel from the user or maintainer population. The results of the assessments derived from the use of the questionnaire shall cover the following:

l. Functionally;

m. equipment operability;

n. human performance of the users during agreed scenarios.

NOTE: This may also cover the interoperability between pieces of equipment used in close proximity or in relationship to one another.

These reports will be presented as a set of documents that support traceability from requirements analysis to the design stage.

Where a project mandates a specific approach to Human Factors (such as those mandated under the HFI process or STGP 10 or 11), the resultant programme of work shall ensure that their output covers the content of the above reports.

The extent of the work undertaken to produce these documents at the different stages of the system life cycle shall be appropriate to the scope of that stage. The following sections describe typical HCI documents developed during the HFI process.

6.6.4.1 HCI Risk Identification Report

The HCI Risk Identification report shall contain the information shown below. The design team shall generate this information by whatever methods are deemed appropriate. Techniques such as Stakeholder Analysis, Task Analysis and Workload Assessment may often be appropriate in identifying HCI Risks.

DOCUMENT TYPE	DOCUMENT CONTENTS & DEFINITIONS
HCI Risk Identification Report	The HCI Risk Identification Report is generated by the design team using whatever methods are deemed appropriate. The following techniques may often be appropriate in identifying HCI Risks: a. stakeholder analysis; b. task analysis; c. workload assessment.
HCI Development Plan	Where the results of the HCI Risk Identification report indicate HCI issues for formal consideration during a project stage, the overall program plan for the stage shall include details of the HCI activities to be performed. The plan shall identify the activities, relationships and extent of activities required to address the identified risks. The activities for the development of HCI aspects of the system shall be undertaken in a systematic and structured way.
HCI Prototyping Documentation	From the HCI Development Plan which explicitly describes HCI prototyping. HCI prototyping shall be carried out at all phases of the design and development process to: d. Clarification of HCI requirements via the identification of the HCI problems. e. Development of design solutions through reviews with user and customer representatives. f. Provides a source of informal / formal user evaluations and trials. This may form part of overall system acceptance.

6.6.4.2 HCI Development Plan

6.6.4.3 HCI Prototyping

The HCI development plan shall explicitly describe the use of HCI prototyping. HCI prototyping shall be carried out at all phases of the design and development process.

Prototypes should not be confused with Alpha and Beta code releases or with demonstrators or simulators.

HCI prototypes should be used within the development environment and perform three essential roles in producing successful HCIs.

a. clarifying HCI requirements via the identification of the HCI problems

b. development design solutions and reviewing them with user and customer representatives

c. supporting both informal user evaluations and formal user trials (which may form part of overall system acceptance).

The purpose, nature and complexity of an HCI prototyping activity will depend on the specific objectives of the development phase and the extent to which HCI issues are critical to operational objectives. The following list identifies typical uses of HCI prototyping at each stage of a development lifecycle:

d. Within the pre-feasibility and feasibility phases, the prime objective of HCI prototyping should be to facilitate the elicitation and specification of high level HCI and operability requirements. Consideration should also be given to investigating HCI design concepts.

e. The prime objective during the project definition phase should be to clarify and support the preparation of detailed HCI requirements specifications. During this stage, consideration should also be given to using the facility as the basis for conducting informal user trials and design validation activities.

f. Within full development and initial production phases, HCI prototyping shall be used to support the development, demonstration and specification of detailed HCI design solutions. The environment should also be used to support further formal and informal user trials. Where the prototyping environment and the implementation of the system HCI on the prototype is sufficiently representative of the production system, consideration should be given to the possibility of conducting trials in the environment.

g. Where in-service equipment is being upgraded, consideration shall be given to the use of prototyping to prove the operational performance criteria will be met before the in-service date.

6.6.4.4 Task Analysis

Task analysis should be included in all development projects incorporating Human Factors activities. A wide range of task analysis methods exist and it is important to ensure consideration of the selected method/s are appropriate and adequately support HCI development. Results and factors concerning the consideration of the selected task analysis methods shall be documented in the HCI Design Rationale.

The task analysis shall address both operational users and system maintainers and should identify:

a. the set of all user and maintainer tasks especially those expected to require interaction with the Human Computer Interface and their relationships to user goals and objectives.

b. performance requirements for each HCI related role and task.

c. the sets of ‘objects’ and related data and behaviours to be reflected in the HCI to support user tasks.

d. information required from the system to support each task.

e. critical tasks and decisions which depend on interaction with the system.

f. the expected allocation of function at an HCI device level between the user and the system.

g. assumptions made about the system design envisaged.

NOTE: The HF task analysis may have implications for the ILS Maintainer Task Analysis and vice versa.

The analysis shall consider the impact of facilities provided by or required from the system to support sharing of information within and between operational units.

Further information on Task Analysis is contained in the 'Tools & Techniques' section of this standard and in STANAG 3994. Also, Kirwan and Ainsworth (1992), provide a summary of a range of Task Analysis techniques and methods together with case studies illustrating their application in a practical environment. Diaper, D., and Stanton, N., A. (2003) provide more recent details on Task Analysis techniques particularly relevant to HCI development.

6.6.4.5 HCI Requirements Specification

The HCI Requirements Specification document identifies the total set of HCI requirements for the system, and specifies the basis by which acceptance of operability aspects of the HCI design will be achieved. The document shall cover both functional and non-functional requirements, and shall be expressed in a manner which, as far as possible, is independent from any particular design solution.

The level of detail in the HCI Requirements Specification document will vary depending on the life cycle stage in which it is produced. The document shall, however, contain the following information:

a. A description of the essential characteristics of the target user population or a target audience description (including operational and maintenance personnel) detailing how they affect the design of the HCI.

b. Details of key tasks to be performed by the target users, including the conditions in which the standards are to be achieved and the User's capabilities.

c. A statement of the guiding principles to be used in developing the HCI.

d. A specification of the information and control facilities to be provided at the HCI including data capacities and standards of system performance to be achieved.

e. A specification of the non-functional requirements. To include where appropriate, standards of HCI performance to be achieved and the maximum amount of training to be given.

NOTE: Activities which may often be appropriate to generate the information required in the HCI Requirements Specification include Stakeholder Analysis, Task and Workload Analysis and HCI Prototyping.

6.6.4.6 HCI Design Specification

The HCI design specification shall contain a description of each of display elements and interactive controls to a level of detail such that the appearance and behaviour of the HCI is unambiguously defined. In some cases, a configured HCI prototype is an acceptable format for an HCI Design Specification but it should be noted that it cannot necessarily replace a design Specification.

The information required to complete the HCI Design Specification can be generated through HCI Prototyping activities and through the use of suitable devices for specifying design details.

The Design Specification shall include a list of terms, parameters, abbreviations and acronyms displayed in the interface.

6.6.4.7 HCI Evaluation Report

The HCI Evaluation Report documents activities to validate that the design solution. This is achieved by checking that the HCI Design satisfies the specified requirements and by evaluating all usability aspects of the design. For example, the document will contain the following:

a. Findings derived from both formal and informal user evaluations.

b. Results of workload prediction or other activities conducted to predict user performance.

c. Results of HCI Audits.

6.6.4.8 HCI Evaluations

Evaluations of the HCI shall be carried throughout system development and be available to assist in deciding between alternative design options. Also, evaluation will support validation by demonstrating that the HCI Design satisfies the system's operability requirements.

Design decisions based on the results of HCI evaluations shall be recorded within the HCI Design Rationale document.

6.6.4.9 HCI Design Rationale

The HCI Design Rationale document provides a source of traceability concerning the decisions that affect the design of the HCI throughout a system development.

The document shall be maintained by the design team during each stage of a procurement and at a minimum contain:

a. a summary of the principal HCI Risks identified for the overall project and the current stage.

b. a statement of system design issues which may impact the HCI Design.

c. a summary of activities undertaken to address each risk.

d. a description of design issues and options which have been addressed.

e. a summary of HCI evaluation activities conducted.

f. a summary of design decisions made, based on the results of HCI evaluations.

g. a statement of outstanding issues to be addressed in future project stages.

6.6.5 Quality and Compliance

Compliance shall be achieved by demonstration that the documentation described earlier has been prepared and maintained in an appropriate format. Compliance with this section shall be achieved separately for each relevant stage in a system procurement.

Compliance shall not be achieved if any of the following conditions are met:

a. Human factors and ergonomic risks and requirements have been identified and have had significantly detrimental impact.

b. User representatives and competent HCI persons have not been consulted throughout the development stage.

c. The information gleaned from user evaluations and other Human Factors and ergonomics activities have not had an appropriate impact on the HCI and system.

6.7 Definitions

Alarm. A type of status indicator used to inform the operator of a hazardous condition or state.

Alphanumeric Keyboard. A matrix of keys representing the following set of characters: 26 upper case letters of the Latin alphabet (A to Z), 26 lower case letter of the Latin alphabet (a to z) and 10 digits (0 to 9). (Alphanumeric numeric layouts have (1) on the upper left position above the alphabet layout and (1) in the lower left position on the numeric keypad. Non-printing graphic space. Punctuation signs and other graphics as required.

Chromaticity. A combined terms referring to hue and saturation of a colour.

Chromostereopsis. Stereopsis results from the shorter wavelength light being refracted more than longer wavelength as it passes through the eye and focuses on the retina. This leads to a perceived difference in distance of different coloured objects from the eye (also known as Depth Effect).

Colour Rendering. The term applied to a light source to describe how it effects the appearance of the coloured surfaces it illuminates.

Context-Sensitive Help. Help in which the help text or range of help users is derived from the contextual information associated with the user's last input, selected object, or the current location within the system or application.

Covergence. The exact alignment (intersection) of electron beams of a colour CRT at a specific point on the plane of its phosphor screen.
Cursor Key. Keys which control the movement of the cursor about the display.

Depth Effect. See chromostereopsis.

Dialogue. An interaction between a user and a system to achieve a particular goal.

Discrimination. The detection of difference between stimuli (e.g. for colour-detection of chromatic difference between visual stimuli.)

Display (visual). The type of information medium that is relevant to, and observed by, the human sense of sight.

Display screen. The display screen is the physical screen (i.e. glass) of the terminal.

Display Resolution. The number of separately addressable pixels on a display screen.

Effectiveness. The accuracy and completeness with which users achieve specified goals.

Error. A mismatch between the user's goal and the response of the system. Errors can include navigation errors, syntax errors, and conceptual errors.

Field. An area on a display in which data is entered or presented.

Flicker. Perception of a quickly recurring variation of luminance or colour valence without the single phases being clearly distinguishable from each other.

Feedback. Output presented by the system in reaction to the user's input.

Help Facilities. Browse-able Help in which access to help is independent of the current task context. Help topics may be addressed in a variety of sequences, and users can navigate between topics. Browse-able help differs from an on-line users guide in that the information within a broad topic area is not restricted to serial access.

On-line Help. Additional user guidance information beyond prompting, feedback, status and error messages that can be obtained at the user's initiative or at the initiative of the system. Help typically includes information about features of the system and dialogue and how they can be used to aid the user in completion of his/her tasks.

Hierarchical Menus. Series of menus which are structured in a hierarchical or 'tree-like' manner, where the selection of an initial option leads to another menu containing additional options, which may lead to another menu, etc, until the desired results are obtained.

Icon. An icon is a pictorial representation of an object consisting of an image, image background, with or without a label, may also be a graphical symbol presented on a display screen that provides a visual reminder of the name, structure, appearance or purpose of the entity that it represents.

Keyboard. An arrangement of typing and function keys laid out in a specified manner.

Luminance. The amount of light per unit area leaving a surface (candelas per square metre).
Luminance Contrast (Contrast Ratio). The difference in luminance of the features of the object being reviewed, in particular of the feature to be discriminated by contrast with its background.

Menu. A set of selectable options.

NOTE: Menu options may be presented to the user by means of visual display devices, or auditory. A menu may contain multiple option groups, but unless only one choice is allowed across groups, each group would be considered a menu.

Mis-convergence. The mis-alignment of red (R), green (G) and blue (B) electron beams.

Monochrome Display. A display rendering images in one hue.

Navigation (Menu). Orientation within a menu structure, movement from option to option within a menu panel and movement from menu panel to menu panel within a menu structure.

Navigation (Form Filling). Navigation for form filling dialogues refers to the user's ability to proceed forward and backward through a form and move from form to form.

Numeric Keyboard. An array of three rows of three keys (for the numerals 1-9), a zero/decimal area and any additional optional keys. (N.B. The telephone layout has (1) in the upper left position in the first row.)

Overlapping Window. In an overlapping format, the set of windows visible on the screen is like a collection of pages on a desktop. Just as pages may be arranged so that a page partially or fully overlaps the pages behind it, so windows may be arranged so that a single window partially or fully overlaps the windows behind it.

Pixel. The smallest addressable display element that is capable of generating the full colour and/or luminance ranges of the display.

Reflectance (factor (R, ρ). The ratio of the luminous flux reflected from a surface to the luminous flux incident on it. Except for matt surfaces, reflectance depends on how the surface is illuminated but especially on the direction of the incident light and its spectral distribution. It is expressed as either a decimal or as a percentage.

Stoke Width. The width of a single line drawn on the display. Since the luminance distribution of the edge will be a blur, and not a sharp edge, the edge is defined as the 50% luminance point of the blur.

Tiled Window. In a tiled format, the set of windows visible on the screen is like a collection of tiles arranged to form a solid surface. As with tiles, no part of any window's border or interior overlaps another window's border or interior.

Virtual Environment. The notional environment generated by an immersive display which presents information in such a way as is appropriate to give the operator the perception of viewing and interacting with objects in three-dimensional surroundings.

Warning. A type of status indicator used to inform the operator *in advance* of a condition or state that requires immediate attention and immediate action.

Window. An independently controllable area on the display screen, usually rectangular and usually delimited by a border, used to present objects and/or conduct a dialogue with the user. Users may provide inputs to the system and/or received outputs from a system within a window.

6.8 References

[156] Diaper, D., and Stanton, N., A. (2003). The Handbook of Task Analysis for Human Computer Interaction. Lawrence Erlbaum Assoc Inc

[157] Enterkin, P. (1994). Human Factors Guidelines for Applications of Speech Controls and Displays in the Military Fast Jet PhD, Cranfield University.

[158] Kirwan, B. and Ainsworth, L. K. (Eds) (1992). A Guide to Task Analysis. Taylor & Francis

6.9 Referenced Documents

The documents and publications referred to in this Part of the Standard are as follows:

[159] Boff K R and Lincoln, J E Engineering Data Compendium: Human Perception and Performance. John Wiley & Sons (1988).

[160] BS EN ISO 9241. Ergonomic requirements for office work with visual display terminals (VDTs)

[161] BS EN ISO 9241-1:1992. Ergonomic requirements for office work with visual display terminals. General introduction

[162] BS EN ISO 9241-2:1992. Ergonomic requirements for office work with visual display terminals. Guidance on task requirements

[163] BS EN ISO 9241-3:1992. Ergonomic requirements for office work with visual display terminals. Visual display requirements

[164] BS EN ISO 9241-4:1998. Ergonomic requirements for office work with visual display terminals. Keyboard requirements

[165] BS EN ISO 9241-6:2000. Ergonomic requirements for office work with visual display terminals. Environmental requirements

[166] BS EN ISO 9241-7:1998. Ergonomic requirements for office work with visual display terminals. Display requirements with reflections

[167] BS EN ISO 9241-8:1998. Ergonomic requirements for office work with visual display terminals. Requirements for displayed colours

[168] BS EN ISO 9241-9:1998. Ergonomic requirements for office work with visual display terminals. Requirements for non-keyboard input devices

[169] BS EN ISO 9241-11:1998. Ergonomic requirements for office work with visual display terminals. Guidance on usability

[170] BS EN ISO 9241-12:1999. Ergonomic requirements for office work with visual display terminals. Presentation of information

[171] BS EN ISO 9241-13:1999. Ergonomic requirements for office work with visual display terminals. User Guidance

[172] BS EN ISO 9241-14:2000. Ergonomic requirements for office work with visual display terminals. Menu dialogues

[173] BS EN ISO 9241-15:1998. Ergonomic requirements for office work with visual display terminals. Command dialogues

[174] BS EN ISO 9241-16:1999. Ergonomic requirements for office work with visual display terminals. Direct manipulation dialogues

[175] BS EN ISO 9241-17:1998. Ergonomic requirements for office work with visual display terminals. Form filling dialogues

[176] Health and Safety at Work etc Act 1974 HMSO

[177] The Health and Safety (Display Screen Equipment) Regulations: 1992

[178] Def Stan 00-55: 1997 Requirements for Safety Related Software in Defence Equipment.

[179] Def Stan 00-56: 1996 Safety Management Requirements for Defence Systems.

[180] STGP10. HFI Management Guide. Sea Technology Group. 2002. Issue 3.

[181] STGP11. HFI Technical Guide. Sea Technology Group. 2002.

[182] STANAG 3994 Application of Human Engineering to Advanced Aircrew Stations. Promulgated 2000

[183] Tullis T S. The Formatting of Alphanumeric Displays: A Review and Analysis in Venturino, M. Ed. Selected Readings in Human Factors. Human Factors Society (1990).

[184] Venturino M Ed Selected Readings in Human Factors. Human Factors Society (1990).

6.10 Other Useful References

The following publications may also be found useful when considering the design of Human Computer Interaction

[185] BS EN ISO 13406-1:1999. Ergonomic requirements for work with visual displays based on flat panels – Introduction

[186] BS EN ISO 13406-2:2002. Ergonomic requirements for work with visual displays based on flat panels. Ergonomic requirements for flat panel displays

[187] BSO ISO/IEC 15504-1:1998. Information technology. Software process assessment. Concepts and introductory guide

[188] BS EN ISO 11064-1:2001. Ergonomic design of control centres. Principles for the design of control centres

[189] BS EN ISO 11064-2:2001. Ergonomic design of control centres. Principles for the arrangement of control suites

[190] BS EN ISO 11064-3:2001. Ergonomic design of control centres. Control room layout

[191] BS EN ISO 14915-1:2002. Software ergonomics for multimedia user interfaces – Part 1: Design principles and framework

[192] BS EN ISO 14915-3:2002. Software ergonomics for multimedia user interfaces – Part 3: Media selection and combination

[193] BS EN ISO 10075-1: 2000. Ergonomic principles related to mental workload. General terms and definitions (ISO 10075:1991)

[194] BS EN ISO 10075-2: 2000. Ergonomic principles related to mental workload. Design principles.

[195] ISO/TS 16071:2003. Ergonomics of human-system interaction – guidance of accessibility for human-computer interface

[196] ISO/IEC 11581-1:2000. Information technology – User system interfaces and symbols – Icon symbols and functions Part 1: Icons – General

[197] ISO/IEC 11581-2:2000. Information technology – User system interfaces and symbols – Icon symbols and functions Part 2: Object icons

[198] ISO/IEC 11581-3:2000. Information technology – User system interfaces and symbols – Icon symbols and functions Part 3: Pointer icons

[199] ISO/IEC 11581-6:1999. Information technology – User system interfaces and symbols – Icon symbols and functions Part 6: Action icons

[200] ISO/IEC 10741-1:1995. Information technology – User system interfaces – Dialogue interaction Part 1 Cursor control for text editing

[201] BS 7083:1996. Guide to the accommodation and operating environment for IT equipment

[202] ANEP 27 (NATO MAS), Edition 1. Human Factors guidelines for the design of MMIs in Operational Rooms

[203] NATO APP 6 (A): 2002. Military symbols for land-based systems

[204] Def Stan 08-111: 2000. Requirements for the design of a user interface to Electronic Damage Control Information Displays

[205] Mil-Std-1472F: 1999. US DoD Design Criteria Standard – Human Engineering

[206] NASA-STD-3000: 1995. Man-Systems Integration Standards Volumes 1 and 2

[207] MIL-STD 1472F. US Department of Defence (1999). Military Standard: Human Engineering design criteria for military systems, equipment and facilities.

[208] MIL-H-46855B Human Engineering Guidelines for Military Systems, Equipment and Facilities.

[209] STANAG 3705 Principles of Presentation of Information in Aircrew Stations Standardization Agreement. Promulgated 1992

[210] Boff, K.R. and Lincoln, J.E. Engineering Data Compendium: Human Perception and Performance. John Wiley & Sons (1988).

[211] Card, Thomas, S.K. Moran P. and Newell A. The Psychology of Human-Computer Interaction. Lawrence Erlbaum Associates Inc (1983).

[212] Consumer Protection Act 1987 HMSO

[213] Department of Trade and Industry. Instructions for Consumer Products: Guidelines for Better Instructions and Safety Information for Consumer Products. HMSO (1989).

[214] Diaper, D. (Ed) Task Analysis for Human-Computer Interaction. Ellis Horwood Ltd (1989).

[215] Ivergard, T. Handbook of Control Room Design and Ergonomics. Taylor and Francis Ltd (1989).

[216] Kirwan, B. A Guide to Practical Human Reliability Assessment. Taylor and Francis (1994).

[217] Lon Barfield (1993) The User Interface Concepts and Design. Addision Wesley Publishers

[218] Maybury, T. (Ed.) (1993). Intelligent Multi Media Interfaces. AAAI Press/MIT Press

[219] Nielsen, J. Usability Engineering. Academic Press Ltd (1993).

[220] Norman, D.A. The Psychology of Everyday Things. Basic Books Inc (1988).

[221] Preece, J. , Rogers, Y., Sharp, H., Benyon, D., Holland, S., and Carey, T. (1994) Human-Computer-Interaction. Addision Wesley Publishers

[222] Salvendy, G. (1997) Ed. Handbook of Human Factors and Ergonomics. 2nd Ed. Wiley-Interscience Publishers

[223] Sanders, M.S. McCormick, E.J. Human Factors in Engineering and Design. 7th Ed. McGraw-Hill Publishers

[224] Schneiderman, B. Designing the User Interface. Addison-Wesley Publishing Co (1987).

[225] Shackel, B. & Richardson, S. Human Factors for Informatics Usability. Cambridge University Press (1991).

[226] Singleton, W.T. Man-machine Systems. Penguin Books Ltd (1974).

[227] Sutcliffe, A. Human-computer Interface Design. The Macmillan Press Ltd (1988)

[228] Travis, D. Effective Colour Displays, Theory and Practice. Academic Press (1991).

[229] Tufte, E R. The Visual Display of Quantitative Information. Graphics Press (1992).

[230] Wickens, C.D. (1992) Engineering Psychology and Human Performance. 2nd Ed. Harper Collins Publishers

[231] Woodson, W.E. Tillman, B. Tillman, P. (1992) Human Factors Design Handbook. 2nd Ed. McGraw-Hill Publishers

7 Controls/Control Types [HFE6]

This technical area is concerned with the design, application and use of controls which enable task performance during interaction. The main concerns are in relation to ensuring

the discriminability between controls and controls types to avoid confusion and error, and optimising the spatial location of controls.

Controls and control types are considered in terms of their selection, through e.g. control shape, colour and labelling and the application of control types according to the operational and environmental context (e.g. voice activated, toggle, joystick, rotary or linear operation etc). The physical specification of control types including, control location, dimension, movement and spacing are provided.

It is of the utmost importance to match the control to the task within the operational and environment context and to consider issues such as the available technology and any constraints, such as protective clothing.

There is considerable overlap with other technical areas, especially within the human factors engineering domain. Specifically, this Section overlaps with the following:

a. Sensory Characteristics [P10]
b. Human Computer Interface/Interaction [HFE5]
c. Information Displays [HFE8]

This Section was created in December 1992 and edited in August 2003.

7.1 Introduction

This Part of the Defence Standard gives guidance on the identification, application, selection and specification of control devices, for use in military systems and equipment. It is a complex issue reflecting a balance between the environment in which tasks are performed, and the level of technology with which they are provided. The appropriate selection of controls is dependent on matching the control to its intended task, the control/display relationship, the control coding and panel layout. Traditional controls, as well as those computer based controls should be selected in the light of design constraints, such as the restrictions imposed by the wearing of protective clothing, or limitations in military vehicle interiors.

Controls are system components that enable the operator to input information, communicate with, and drive system functionality. The design, selection and arrangement of control must adhere to ergonomic criteria such as shape and size and be compatible with the anthropometric, anatomical and physiological characteristics of the target population.

Established display/control compatibility principles stress the importance of ensuring control/display designs adhere to human expectations. Table 7.1:1 below, from Salvendy (1997), summarises specific compatibility principles that adhere to human expectation and should be referred to when designing controls and respective displays.

Significant control parameters are resistance, accuracy and speed, which vary according to the control type, dimension and location. Control actuating parameters are dictated by human muscle force, the control force application point and direction and coupling type. Design variables should consider issues like the control task, coupling conditions and human characteristics and traits. Location of the control in relation to the user will influence control shape. In addition, the anthropometry of reach, hands and fingers, and the cross section of the control should all influence the design. Provision of feedback is essential.

Safety considerations are especially important for the high-risk domains to avoid inadvertent actuation of controls by authorised or unauthorised personnel or through mechanical vibration or falling objects. For example, choosing particular shapes and surfaces for controls can help to prevent hands slipping from controls.

PRINCIPLE	DESCRIPTION
Principle of location compatibility	Controls should be located to the corresponding display, and their spatial arrangement should allow users to tell easily which control is used for a particular display
Principle of movement compatibility	The indicator of a display should move in the same direction as its control
Principle of conceptual compatibility	The layout and the operational methods of controls should be consistent with expectations of the intended user population
Principle of compatibility of display orientation	For analogue displays, the orientation and ordering of the display should be consistent with those of the mental representation
Principle of compatibility of display movement	The direction of movement of the moving part of a display should be consistent with user expectation

Table 7.1:1: Compatibility Principles

7.2 Scope

This Part of the Defence Standard specifies requirements on the optimum size, shape and operating dynamics, i.e. operating torque and displacement for a range of controls and enables designers to select the control most relevant to the task. Recommendations are also given on the spacing necessary for each control to permit it to be operated without interference with others adjacent to it.

7.2.1 Identification System Used

To assist the user of this Part of the Defence Standard, an alphanumeric identification system has been applied to the controls. The first part comprises a letter which identifies the control function, followed by a single number which refers to the general control type.

The second part is a number which identifies an individual type of control. This identification system remains constant throughout the sections of this Part of the Defence Standard:

e.g.	Control functions	: C-.--	Data entry
	Control types	: -5.---	Keyed
	Individual control	: --.22	Keypad
	Identification reference	C5.22	

The classification and identification of control types outlined above and detailed in Table 7.2:1 will permit the designer to select the general class of control relevant to the requirements. It should be noted that this classification has been used for illustrative purposes only and that the control functions are not necessarily mutually exclusive.

CONTROL FUNCTION	CONTROL TYPES	INDIVIDUAL CONTROL	REFERENCE
Continuously Variable Operation A	1 Rotary	- 01 Knobs 02 Thumbwheels 03 Cranks 04 Handwheels	A1 A1.01 A1.02 A1.03 A1.04
	2 Linear	- 05 Levers 06 Sliding Levers 07 Pedals	A2 AS.05 A2.06 A2.07
	3 Multi axis	- 08 Joysticks	A3 A3.08
	4 to 7 Not applicable	-	-
Discrete Operation B	1 Rotary	- 09 Selector switches 10 Thumbwheels 11 Key operated switches 12 Keylocks	B1 B1.09 B1.10 B1.11 B1.12
	2 Linear	- 13 Toggle switches 14 Levers 15 Push-pull controls 16 Slide switches	B2 B2.13 B2.14 B2.15 B2.16
	3 Not applicable	-	-
	4 Push button	- 17 Buttons 18 Legend switches 19 Foot operated switches 20 Rocker switches	B4 B4.17 B4.18 B4.19 B4.20
	5 to 8 Not applicable	-	-
Data Entry C	1 to 4 Not applicable	-	-
	5 Keyed	- 21 Keyboards 22 Keypads 23 Keysets 24 Multifunction keysets	C5 C5.21 C5.22 C5.23 C5.24
	6 Voice activation	- 25 Voice recognition systems	C6 C6.25
	7 On screen spatial	- 26 Touch displays 27 Light pens	C7 C7.26 C7.27
	8 Off screen spatial	- 28 Digitizing tablets 29 Mouse 30 Rolling ball	C8 C8.28 C8.29 C8.30

Table 7.2:1: Classification & Identification of Control Devices

7.2.2 Control Function

7.2.2.1 Continuously Variable Operation

See Figure 7.2:1. These are controls which permit the setting of a machine or system to operate at any point or value along a continuum and controls which permit the continuous alteration of a machine state. An example of the former would be a radio volume gain control which allows the user to increase or decrease the sound output gradually and to stop at an infinite number of positions within its operating range. An example of the latter would be a joystick, which when used in the tracking of a target, permits continuous adjustment of guidance parameters acting in the system.

7.2.2.2 Discrete Operation

See Figure 7.2:2. These are controls which permit the selection between two or more mutually exclusive operating functions. For example, switching a machine 'on' or 'off' is a discrete operation, as is the selection of different modes of system activity.

7.2.2.3 Data Entry

See Figure 7.2:3. Controls designed for the input of information, e.g. to computer based systems.

7.2.3 Control Types

7.2.3.1 Rotary Operation

Controls typically mounted on a spindle which require a circular or turning movement to alter the state of a machine or system.

7.2.3.2 Linear Operation

Controls requiring linear displacement in one axis in order to alter a single parameter of the system.

7.2.3.3 Multi Axis Operation

Controls suitable for varying a continuous input on two or more dimensions simultaneously by manipulating the control in more than one axis.

7.2.3.4 Push Button Operation

Controls for selection between two operational states by the application of force perpendicular to the surface of the control. May be finger, hand or foot operated.

7.2.3.5 Keyed

A specialized assembly of push buttons organized to permit rapid sequential information input into a machine. Normally groups of letters or digits, 'alphanumeric' characters, are selected but keys may also be allocated specialized functions.

7.2.3.6 Voice Activation

A method of data entry such that information is entered into the system by means of voiced commands from the operator. Also known as Direct Voice Input (DVI) speech recognition.

7.2.3.7 On Screen Spatial, Spatial Designation Devices

Where pointing is directed at the surface of the visual display screen.

7.2.3.8 Off Screen Spatial, Spatial, Designation Devices

Where pointing is remote from the display, but addressed towards a surface corresponding spatially to that of the display.

NOTE: For the purpose of this Part of the Standard, spatial designation devices are those whereby the displacement of a stylus or other pointing device across a surface results in a corresponding displacement of an index or cursor on a visual display. Such devices may be used either to input co-ordinates to the system or as a means of reading co-ordinates from the visual display.

7.2.4 Individual Controls

Individual control types can only be defined usefully by describing their precise method of operation and this is achieved most clearly by means of diagrams or written descriptions where diagrams are less appropriate.

7.2.4.1 Continuously variable operation

A Continuously Variable	DIAGRAM	COMMENT
A1 Rotary		
A1.01 Knob		'Ganged', concentrically mounted
A1.02 Thumbwheel		
A1.03 Crank	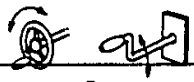	
A1.04 Handwheel	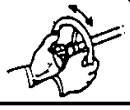	
A2 Linear		
A2.05 Lever		
A2.06 Sliding Lever		
A2.07 Pedal		
A3 Multi axis	A B C	A Whole hand
A3.08 Joystick		B Thumb and finger C Thumb

Figure 7.2:1 Rotary, Linear and Multi axis Operation

B Discrete	DIAGRAM	COMMENT
B1 Rotary		
B1.09 Selector switch		
B1.10 Thumbwheel		
B1.11 Key operated switch	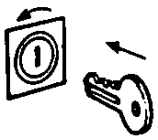	
B1.12 Keylock		Associated with latch systems
B2 Linear		
B2.13 Toggle switch		
B2.14 Lever		
B2.15 Push-pull control		
B2.16 Slide switch		
B4 Push button		
B4.17 Button		
B4.18 Legend switch		Button with inscribed legend. May be illuminated
B4.19 Foot operated switch	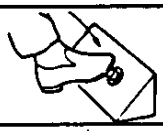	
B4.20 Rocker switch		

Figure 7.2:2 Rotary, Linear and Push Button Operations

C Data Entry	DIAGRAM	COMMENT
C5.21 Keyboard		An arrangement of push buttons or touch-sensitive surfaces for the entry and manipulation of commands, text and alphanumeric characters into a computer or data handling system
C5.22 Keypad		A pad of numeric keys telephone type layout
C5.23 Keyset	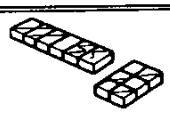	An array of keys with dedicated functions
C5.24 Multi-function keyset		An array of keys, the function of which will change according to the system's mode of operation
C6 Voice Activation C6.25 Voice recognition system	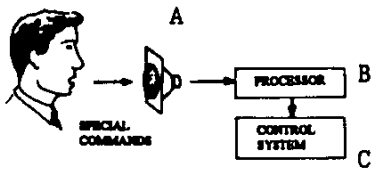	A Special commands B Processor C Control system A data entry method employing voice/speech commands to input information to computerized equipment
C7 On screen spacial C7.26 Touch display	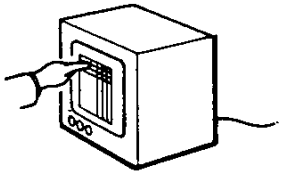	Operator designates points on a Cathode-Ray Tube (CRT), eg by directly contacting the screen surface with a finger or probe
C7.27 Light pen	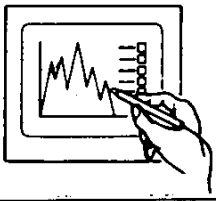	Operator uses a pen-sized probe, the position of which is sensed when held close to the surface of a CRT, permitting designation on the display

Figure 7.2:3 Key, Voice Activation, On Screen & Off Screen

7.3 Technical Guidance

7.3.1 Selection for Specific Applications

There are various means by which features of the control design can support the identification of controls. Specifically, controls can be differentiated by Location, Labelling, Colouring, Shape and Size.

7.3.1.1 Location Coding

This is the most effective coding method under conditions in which the control cannot be seen because of low illumination levels or because the control is not positioned in the field of view. Even when the control is visible, location can supplement visual coding and is to some extent the natural result of good workspace design (see Part HFE3 of this Defence Standard). When location coding is used for controls which cannot be seen they should be positioned in front of rather than behind the operator.

7.3.1.2 Labelling

This is the simplest method of coding and has the advantage of requiring little or no training for use by the operator. However, labels must meet the visual requirements of the operator in terms of size, illumination and contrast if they are to be adequate (see Parts HFE4 and HFE8 of this Defence Standard). It must be possible for the operator to read the legend while performing the task. Labels should be appropriate, brief, clear and unambiguous, and contain the basic information needed. Labels should be located either on the controls or adjacent to them, normally above, except when controls are placed above the operator's head, in which case locating the label below the control is more appropriate. Labels should be sufficiently close to the control to avoid confusion over which label applies to which control. Location must be systematic, as uniform as possible and consistent between panels.

7.3.1.3 Colour

Colour may be used to discriminate between controls and the use of the same colour can be used to indicate related controls.

NOTE: Colour coding should only be used as a supplement to other coding methods, as colour blind operators may otherwise be unable to distinguish controls.

Avoid the use:

a. of more than five colours;
b. when ambient illumination itself appears coloured.

Emphasis should be placed on:

c. RED for Emergency Controls;
d. Sharply Contrasting Colours for Critical Controls.

7.3.1.4 Shape

Shape may be used to discriminate between controls and the use of the same shape can indicate related controls. Shape coding permits touch discrimination when controls cannot be directly observed but also aids visual identification. Shapes should be selected which are easily distinguishable from one another since the use of shapes which are easily associated

with the controlled function aids the operator in learning. When shape coding is used the coded feature should not interfere with control manipulation. The shapes used should be identifiable regardless of the position or size of the control. Simple shapes are easier to discriminate than complicated ones and are less difficult to decontaminate under NBC conditions.

7.3.1.5 Size

The size of a control may be used as a means of distinguishing it from others. Although not as effective as shape coding it does provide useful visual and/or tactile cues. Operators can learn to discriminate a limited number of sizes, usually only two or three by touch, e.g. small, medium and large. Code sizes should be consistent when controls have similar functions on different items of equipment.

7.3.1.6 Choice

A particular method of coding is essential for the designer to take into account the demand imposed by the nature and conditions of the operator's whole task at the time that the control must be identified. For example, colour coding and labels will not be useful if the operator must constantly maintain attention to a visual display while selecting the control.

As a guide, the designer should consider the following factors before selecting a coding method:

a. existing codes, perhaps implicit in the workspace design, such as, controls placed next to associated displays;
b. space available for coding;
c. illumination of the workspace, affecting the usefulness of visual codes;
d. the speed and accuracy with which controls must be identified, touch is slower and usually less accurate than vision;
e. the number of controls to be coded. Labels are infinitely variable, whereas colour may only permit five classes of control to be distinguished;
f. standardization of coding methods within a workspace.

NOTE: If in doubt, trials should be undertaken to ensure that controls are readily distinguishable under the expected conditions of use.

7.3.1.7 Desirable functions and characteristics

	CONTROL TYPES										
	A CONTINUOUS VARIABLE OPERATION					B DISCRETE OPERATION					
CONTROL FUNCTIONS	1 ROTARY			2 LINEAR	3 MULTI AXIS	1 ROTARY		2 LINEAR		4 PUSH BUTTON	
	01	02	03/04	05/06	08	09	10	13	14	17	20
	Knobs	Thumb Wheels	Hand Wheels	Levers (including sliding levers)	Joysticks	Selector Switches	Thumb Wheels	Toggle Switches	Levers	Push Buttons	Rocker Switches
SYSTEM POWER ON/POWER OFF	-	-	-	-	-	3	-	1	See NOTE1	2	2
3 STATE 'OFF' – 'STANDBY' – 'ON'	-	-	-	-	-	1	-	2	-	-	3
SELECT ONE OF A NUMBER OF RELATED FUNCTIONS	-	-	-	-	-	-	-	2	-	1	2
SELECT ONE OF A NUMBER OF MUTUALLY EXCLUSIVE FUNCTIONS OF ANY ORDER	-	-	-	-	-	-	-	-	-	1	-
SELECT ONE OF 3-24 DISCRETE ALTERNATIVES: SEQUENTIAL ORDER	-	-	-	-	-	1	-	-	-	-	-
SELECT DIGITS: DISCRETE	-	-	-	-	-	See NOTE2	See NOTE2	-	-	1 keyboard or keypad	-
SET VALUES ON: CONTINUOUS SCALE	1	2	2	2	-	-	-	-	-	-	-
SET VALUES IN: DISCRETE STEPS	-	-	-	-	-	1	1	-	-	1	-
INITIATE MOMENTARY TEST FUNCTION	-	-	-	-	-	2	-	1 (spring biased)	-	1 (non-latching)	2 (spring biased)
EMERGENCY STOP	-	-	-	-	-	-	-	3	See NOTE1	1 (hand operated)	3
ENGAGE/DISENGAGE	-	-	-	-	-	-	-	-	-	-	-
ADJUST LIGHT/SOUND LEVEL CONTINUOUSLY	1	2	-	1 (sliding lever)	-	-	-	-	-	-	-
TRACKING IN SINGLE AXIS	3	-	2	1	-	-	-	-	-	-	-
TRACKING IN 2/3 AXIS	-	-	-	-	1	-	-	-	-	-	-

Figure 7.3:1 Desirable functions of Controls, Types A & B

Note: Information applicable to Figure 7.3:1 are on page 440.

	CONTROL TYPES										
	A CONTINUOUS VARIABLE OPERATION					B DISCRETE OPERATION					
CONTROL FUNCTIONS	1 ROTARY			2 LINEAR	3 MULTI AXIS	1 ROTARY		2 LINEAR		4 PUSH BUTTON	
	01	02	03/04	05/06	08	09	10	13	14	17	20
	Knobs	Thumb Wheels	Hand Wheels	Levers (including sliding levers)	Joysticks	Selector Switches	Thumb Wheels	Toggle Switches	Levers	Push Buttons	Rocker Switches
CONTROL SETTING SPEED	MEDIUM	SLOW	SLOW	FAST	-	MEDIUM	SLOW	VERY FAST	MEDIUM TO SLOW	VERY FAST	VERY FAST
RECOMMENDED NUMBER OF CONTROL SETTINGS	-	-	-	-	-	3 – 24	3 – 10	2 – 3	NOTE4	See NOTE1	2
PANEL SPACE REQUIREMENTS FOR LOCATION AND OPERATION	MEDIUM	SMALL	LARGE	MEDIUM TO LARGE	MEDIUM TO LARGE	MEDIUM	SMALL	SMALL	MEDIUM TO LARGE	SMALL	SMALL
LIKELIHOOD OF ACCIDENTAL OPERATION	MEDIUM	MEDIUM	MEDIUM	HIGH	HIGH	LOW	MEDIUM	SMALL	SMALL	MEDIUM TO LARGE	LOW TO MEDIUM
EASE OF VISUALLY IDENTIFYING CONTROL POSITION	See NOTE5 FAIR	See NOTE5 POOR	FAIR	FAIR		GOOD	FAIR TO POOR	GOOD	FAIR TO GOOD	POOR (unless backlit)	FAIR
EASE OF NON-VISUALLY IDENTIFYING CONTROL POSITION	POOR	POOR	POOR	GOOD		GOOD	FAIR	GOOD	GOOD	POOR (unless backlit)	FAIR
EASE OF 'CHECK'READING' THE CONTROL WHEN IN AN ARRAY OF SIMILAR CONTROLS	See NOTE5 FAIR TO POOR	POOR	POOR	GOOD		GOOD	FAIR	GOOD	GOOD	POOR (unless backlit)	FAIR
REFERENCE CONTROL SELECTION DESIGN STANDARD	A101	A102	A103 A104	A205 A206	A308	B109	B110	B213	B214	B417	B420

Figure 7.3:2 Desirable Characteristics of Control Types A & B

NOTE: The information below applies to Figure 7.3:1 and Figure 7.3:2. The control function Figure 7.3:2 applies to the Army, Navy and RAF ground station applications. Designers of flight controls for aircraft are referred to Table 1 of Defence Standard 00-970.

KEY: In the Desirable Functions of Controls

Figure 7.3:2 '1' indicates the most preferred control, '3' the least preferred.

NOTE1 Use of lever for heavy duty power circuits or for 'dead-man's handle' application.

NOTE2 Controls should be used only if sequential selection of digits is acceptable.

NOTE3 For values greater than ten, a horizontal array of thumbwheels, graduated from 0-9 should be used.

NOTE4 Depends on the configuration of the lever unit, e.g. linear operation vs. 'gearbox' application.

NOTE5 Only if the control makes NO MORE THAN ONE ROTATION. Rotary knobs should have a pointer attachment.

Preferred for applications requiring a high operating torque.

7.3.2 Population Stereotypes

Specifies the characteristics of people raised in a technological culture developing expectations of the method of operation of controls and displays. Some of these expectations will develop as a result of knowledge of the operation of the equipment but others arise as a result of learning and by being exposed to control devices. Examples of this are the expectations that pushing a toggle switch down in the United Kingdom will result in equipment being activated, that running a potentiometer clockwise will increase the value of the varied parameter but that turning the tap associated with a valve clockwise will decrease the rate of flow of a fluid. These expectations are called population stereotypes, as variations exist between the one population and another.

7.3.2.1 Design Guidelines

The designer must consider the population of users for which the equipment is designed when configuring the controls. If the users are not United Kingdom citizens the most appropriate mode of operation of controls may differ from that which the designer may expect. For example, United States of America operators would expect to move a toggle switch upwards to activate equipment in contrast to the typical United Kingdom configuration. As a general rule, unless direction of operation is logically natural or intrinsic to the operation of equipment, e.g. turning a steering wheel to the right to change direction to the right, the designer should be sensitive to variations in population stereotypes. Where possible, United Kingdom stereotypes have been included under the relevant control Standards. However, there will be occasions in which the stereotype is unclear, such as when, due to a change in technology, potentiometer controlled systems are utilized to vary flow rate in a situation in which manually operated valves were previously used. On these occasions advice should be sought from human factors specialists and it may be necessary to determine the appropriate method of operation by experimental methods. Specialist advice should also be sought if design is aimed at a foreign population of users.

7.3.2.2 Control/Display Relationships

Conventions exist in the particular relationship between controls and the displays associated with them. These conventions apply with respect to the direction of motion of displays in response to control demands and with respect to the positioning of the display and its associated control in an array of such devices. Detailed advice is given in Sanders and McCormick (1992)

7.3.3 Preferred Physical Specifications for Continuous Variable Controls

7.3.3.1 Knob (A1.01)

They are suitable for high-precision adjustments in the control of continuous variables, when little force is necessary for operation. i.e. for small potentiometers.

7.3.3.2 Location

Careful positioning, recessing or covering can reduce the likelihood of accidental activation.

7.3.3.3 Recommended Dimensions.

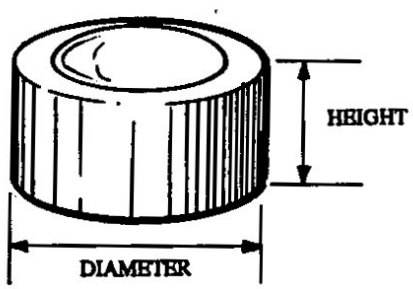

Fingertip Grasp		Thumb & Finger Encircled		Palm Grasp		
Height	Dia	Height	Dia	Height	Dia	
13mm	10mm	13mm	25mm	80mm	38mm	Minimum
25mm	100mm	25mm	75mm	120mm	75mm	Maximum

EDGE SPACING 'S':

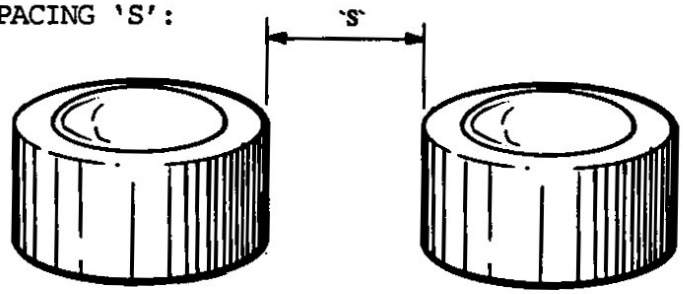

For Setting Individually		For Simultaneous Setting With Two Hands		
Bare Hands	Gloved Hands	Bare Hands	Gloved Hands	
25mm	25mm	50mm	90mm	Minimum
50mm	90mm	75mm	100mm	Optimum

Figure 7.3:3: Knob Dimensions

7.3.3.4 Shape

The knob shape will normally be round, this will assist in finger positioning. It should not have sharp edges. The rim should have a textured surface that would facilitate a secure grip in operation (e.g. for small knobs, a knurled surface, medium size, a ribbed surface, and those for high torque application, indentations on the rim). Knobs serving the same function should have the same shape throughout the system.

7.3.3.5 Displacement Resistance

A maximum arc of rotation by wrist movement of approximately 120° should be used for fine adjustment of high precision settings.

The recommended operating torque for single knob application is: Knob diameter <25mm, Resistance 32 mNm, >25mm, Resistance 43 mNm maximum. For knobs in rows, columns or matrices a torque of between 14-28 mNm is to be adopted. However, the torque of 43 mNm takes account of the wearing of heavy gloves and is only satisfactory when the sensitivity of the control is kept as low as possible. The turning resistance offered by the control is to be determined on the basis of the function of the control. 'Stickiness' in operation of fine setting is not desirable.

7.3.3.6 Direction of Motion

The direction of motion should follow recognized stereotypes, such as clockwise movement to indicate an increase in value. The exception to this standard practice is flow control valves where the automatic reaction is to turn clockwise in order to shut off.

7.3.3.7 Other Requirements

Knob mountings should be held securely on to the shaft. If this is set by using screws, using a screw driver, these should be indentations or flats on the shaft.

7.3.3.8 Adjacent scale markings

When the knob movement is limited to less than 360 degrees, a scale mark may be located around the control on the panel. An index line should be placed on the knob to indicate the control position index. The null gap should be between the two end stop points.

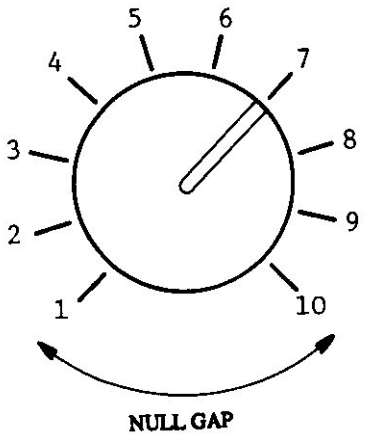

Figure 7.3:4: Knob Scale Markings

7.3.3.9 Ganged Knob Dimensions and Clearance Settings

a. Spacing

FOR SETTING INDIVIDUALLY		FOR SIMULTANEOUS SETTING WITH TWO HANDS		
BARE HANDS	GLOVED HANDS	BARE HANDS	GLOVED HANDS	
25 mm	25 mm	50 mm	90 mm	MINIMUM
50 mm	90 mm	75 mm	100 mm	OPTIMUM

Table 7.3:1: Ganged Knob Settings

H_1	H_2	D_1	D_2	
16 mm	13 mm	13mm	22mm	MINIMUM
-	-	-	100 mm	MAXIMUM

Table 7.3:2: Ganged Knob Dimensions

H_1 = Height of Upper Knob
H_2 = Height of Lower Knob
D_1 = Diameter of Upper Knob
D_2 = Diameter of Lower Knob

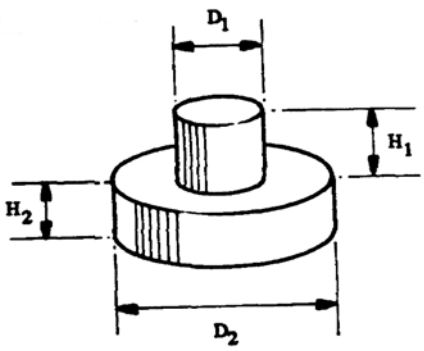

Figure 7.3:5: Ganged Knob

b. Shape. In most instances comments relating to single knobs also apply to ganged knobs.

c. Displacement resistance

<25 mm DIAMETER	>25 mm DIAMETER	
32 mNm	43 mNm	MAXIMUM

Table 7.3:3: Displacement Resistance

d. Direction of motion. This is to follow recognized stereotype practices, i.e. clockwise to increase values. The exception to this standard practice is flow control valves where the automatic reaction is to turn clockwise in order to shut off.

7.3.3.10 Thumbwheels (A2.02)

Thumbwheels have greater compactness than rotary knobs. They cannot be operated as rapidly as the rotary knob, nor do they identify set control positions unless linked to an associated visual display.

7.3.3.11 Location

They are to be positioned horizontally or vertically mounted in the workspace after assessing the suitability of the location.

7.3.3.12 Recommended Dimensions

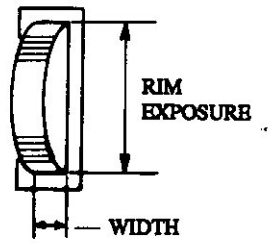

Rim Exposure	Width	
25mm	3mm	Minimum
100mm	23mm	Maximum

EDGE SPACING 'S':

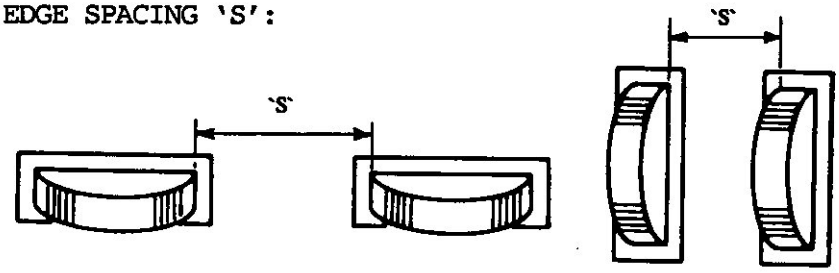

Horizontally Mounted	Vertically Mounted	
75mm	38mm	Minimum With Gloves
50mm	25mm	Minimum

Figure 7.3:6: Thumbwheel Dimensions

7.3.3.13 Shape

The thumbwheel shape will normally be round with the rim surface corrugated, knurled or fluted for friction in operation. It should not have sharp edges.

7.3.3.14 Displacement Resistance

To prevent accidental operation the thumbwheel is to offer some resistance to turning, a resistance between 1.7N and 3.3N is suggested. The operating torque is determined by the diameter of the thumbwheel; for the smaller sizes the maximum torque for operation is to be 21 mNm and for the larger size the maximum torque is to be 42 mNm.

7.3.3.15 Direction of Motion

Increases in the controlled variable are normally to the right on horizontally mounted and upward on vertically mounted thumbwheels. Where thumbwheels are used to govern vehicle motion, i.e. 'dive' in a remotely operated submersible the forward movement on a longitudinal mounted thumbwheel should cause a downward forward motion.

7.3.3.16 Other Requirements

A click stop and index mark is to be provided where the thumbwheel has an 'OFF' position.

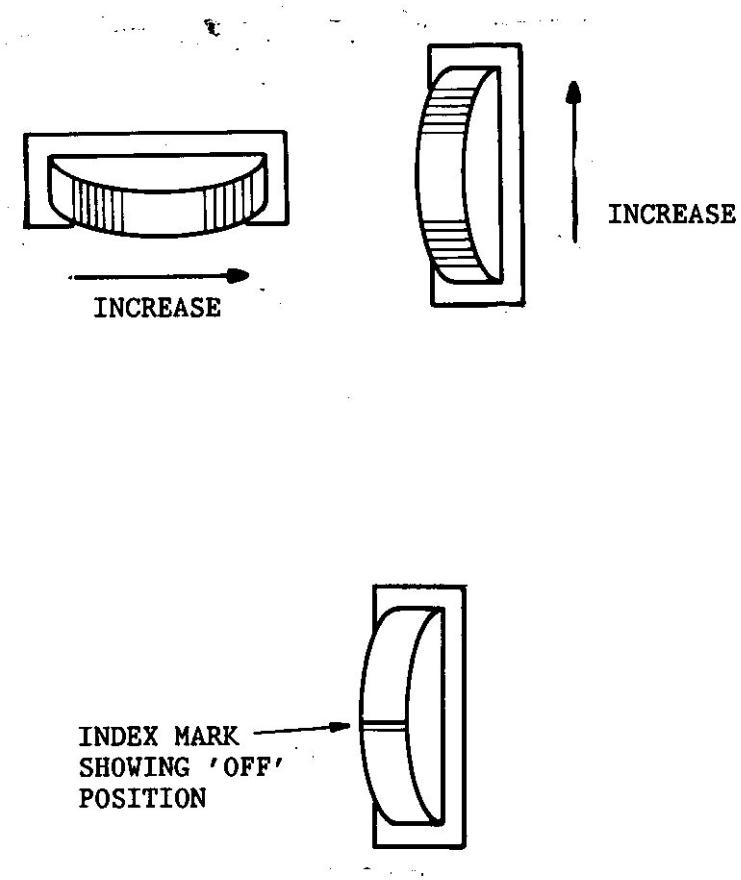

Figure 7.3:7: Single Rotary Knob Operation

7.3.3.17 Cranks. (A1.03)

They are suitable where multiple revolutions of a control are required. Simultaneously operated hand cranks are the preferred two axes controller (i.e. for adjustment in 'x' and 'y' axis) where extreme precision is necessary in the setting of crosshairs or reticles. They are not suitable for the tracking of moving targets.

7.3.3.18 Location

To be located within a comfortable and convenient reach for the population of intended end users. If large forces are to be exerted the designer may consult Part HFE4 of this Standard to determine the posture and hence crank location, appropriate for the required force. Standing operated cranks are to be positioned between 900-1200 mm above the floor. Cranks designed for rapid turning are to be mounted so that their turning axes are between 60º and 90º from the frontal plane of the body's centreline.

7.3.3.19 Recommended Dimensions

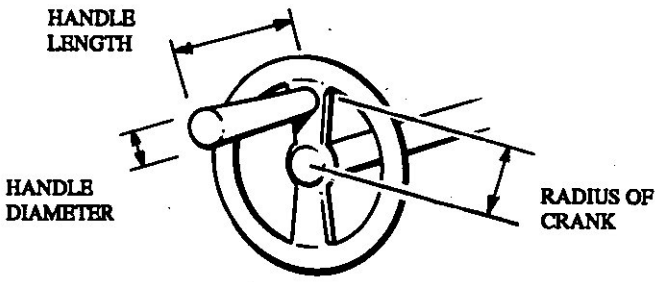

Load		Handle Length	Handle Diameter	Radius Of Crank
Light Load <22N (wrist & finger movements)	Minimum	25mm	10mm	13mm
	Maximum	75mm	16mm	125mm
Heavy Load >22N (arm movements)	Minimum	75mm	25mm	125mm
	Maximum	>95mm	38mm	510mm

EDGE SPACING 'S':

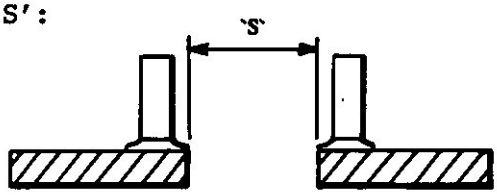

Adjacent Cranks Used Simultaneously	Cranks Operated Sequentially	
75mm	50mm	Minimum
125mm	100mm	Optimum

Figure 7.3:8 Crank Dimensions

7.3.3.20 Shape

Handwheel or bar formed with a handle. The provision of a handle maximizes the area in contact with the hand and it is to have a protective shaped guard at the base. A handle is normally designed to turn freely about its shaft to aid rapid rotation, although a fixed handle may sometimes be preferred for precise adjustment.

7.3.3.21 Displacement Resistance

The degree of resistance will normally be determined by the required speed of rotation and by the strength of the operator, both of which will influence the dimensions of the crank. In general, increases in the degree of resistance will reduce the maximum turning rate. Inertia will assist in the maintenance of a constant rate of rotation.

7.3.3.22 Direction of Motion

Hand cranks are turned clockwise for the maximum speed of operation.

7.3.3.23 Other Requirements

For safety the location is to be out of the way of passers-by. It should be balanced to prevent the weight of the handle from turning the crank from its setting. Being multi-rotational, the position is not an indication of the control setting.

7.3.3.24 Handwheels (A1.04)

Handwheels are suitable where two handed operation is required due to high operating force, opening/closing of pressure tight hatches or high torque valves. Both hands are to be available for this task. The speed of operation is typically slower than achievable with cranks operated single handedly.

7.3.3.25 Location

This is dependent on whether the operator is seated or standing and the plane of operation. The following hand wheel positions are recommended:

a. operator seated with wheel plane Vertical: Centre of wheel 450 mm above top of seat and 550 mm from seat back;
b. operator seated with wheel plane Horizontal: Centre of wheel 300 mm above top of seat and 550 mm from seat back (Optimum);
c. operator standing with wheel plane Vertical: Centre of wheel 1075 mm above floor;
d. operator standing with wheel plane Horizontal: Rim of wheel 1375 mm above floor.

7.3.3.26 Recommended Dimensions

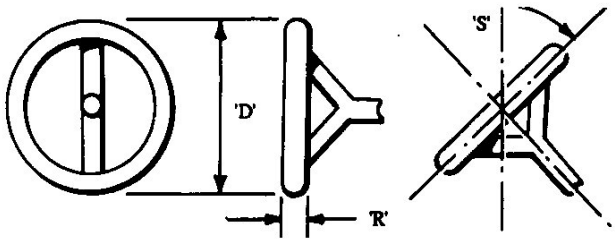

Wheel Diameter 'D'		Rim Dia 'R'	Slope 'S'
Vertical (wall panel)	200-510 mm	19-32 mm	Vehicle Steering Light 39° Heavy 45-90°
Horizontal (overhaed)	200-400 mm	19-32 mm	
Horizontal (floor panel)	300-1520 mm	19-32 mm	

EDGE SPACING:

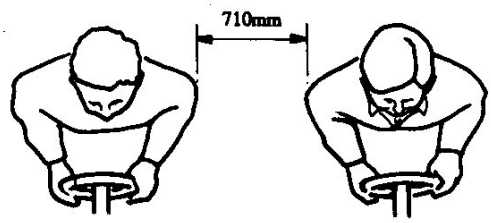

Minimum Hand Clearance Around Rim	75 mm
Elbow-to-Elbow Clearance	710 mm
Overhead Valve Rim-to-Rim Clearance	100-150 mm

Figure 7.3:9: Handwheel Dimensions

7.3.3.27 Shape

The shape should be correct in relation to adjacent/similar controls. It is also to be shaped to facilitate a good grasp and not have any sharp edges.

7.3.3.28 Displacement Resistance

Operating force at the periphery of the hand wheel is normally 245N maximum for two-handed operation. However, a range of 9N-127N may be adopted if one hand operation is likely. For small arcs of movement, inertial resistance must be minimized. Effective use of the hand wheel is limited to 60º of arc which is the maximum that can be achieved without removing the hands from the hand wheel.

7.3.3.29 Direction of Motion

This is to follow recognized stereotype practices, i.e. clockwise to increase values. The exception to this standard practice is flow control valves where the automatic reaction is to turn clockwise in order to shut off.

7.3.3.30 Other requirements

For safety in steering wheel applications, the use of a collapsible steering column, recessing the wheel hub and providing it with a broad pad may be a design requirement. Two hands are better than one for applying force and for tracking/steering accuracy. One handed performance is adversely affected in vibrating conditions. These factors are to be taken into account. Accidental activation is best prevented by locking the hand wheel in place, and/or using resistance and careful selection of the location. The grasp of the hand wheel is facilitated by indentations and knurling. High steering wheels should take into account the operator's need to see over the wheel and enable access and egress. The wheel axis should be centred on the operator's body centre-line and sloped to allow both of the hands and arms approximately equal access. The operator is to be able to steer vehicles equipped with power steering to a safe stop in the event of power (?) failure. Vehicle steering ratios should ensure that no more than 3.5 turns are required to achieve maximum turning limits.

7.3.3.31 Levers (A2.05)

The state of activation should be visible and the design should enable adjustments to be made rapidly. Three functional characteristics are:

a. heavy duty;
b. high force;
c. throttle levers.

7.3.3.32 Location

The location and position of levers relative to the operator are to be compatible with reach limits, mobility, natural movements and strength capabilities (see Part P3 of this Standard).

7.3.3.33 Recommended Dimensions

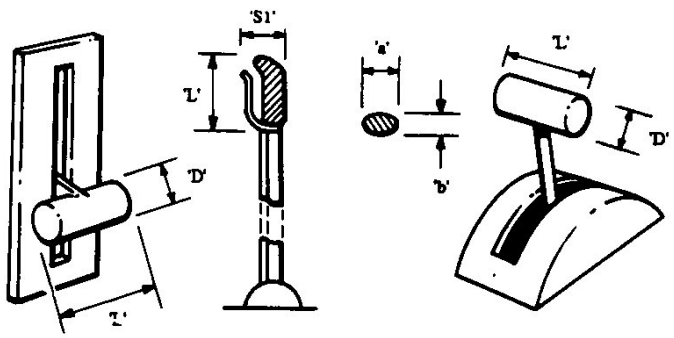

Handle Length = 'L' Handle Diameter = 'D' Span = 'S1'

Heavy Duty	High Force	Throttle Levers
'L' 70 mm	'L' 100 mm	'L' 70 mm
'D' 19 mm	x-sect'a'38x'b'25	'D' 19 mm min 28 mm max
	'S1' 75 mm	

EDGE SPACING:

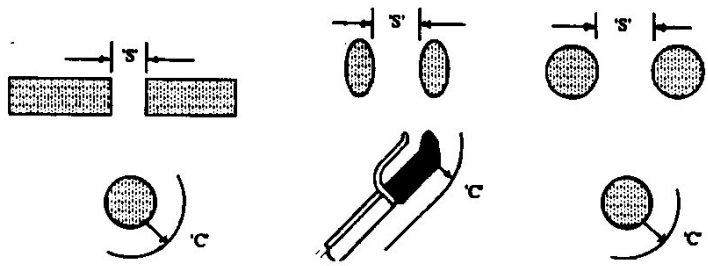

Edge Spaceing = 'S' Clearance = 'C'

'S' 20 mm Minimum & 30 mm Glove Min	'S' 75 mm Minimum	'S' 50 mm for Spherical or Cylindrical Shape
'C' 50 mm Minimum	'C' 60 mm Minimum	'C' 50 mm Minimum

Figure 7.3:10 Lever Dimension

7.3.3.34 Shape

The length of the lever is to be determined after considering the mechanical advantage of the system, operator position and the limitations of the 5th percentile operator. Handle shape can be cylindrical, spherical or shaped to fit the hand grip as required but with no sharp edges. Anti-slip texturing may be applied.

7.3.3.35 Displacement Resistance

a. Heavy duty – an operating resistance between 4.5 N–45 N and minimum displacement of 50 mm is to be adopted.
b. High force – an operating resistance of 187 N and maximum displacement (in the worst case of a seated operator) of 355 mm is to be adopted.
c. Throttle levers – an operating resistance between 9 N–135 N and displacement between 50–350 mm is to be adopted.

7.3.3.36 Direction of Motion

It is recommended that levers be pulled OFF (brakes pulled ON) towards the operator. Heavy duty levers are only to be used in an up/down orientation.

7.3.3.37 Other Requirements

Labelling of lever function and direction of motion is to be provided. Limb support, where practical, could be provided for fine or continuous adjustment.

7.3.3.38 Dimensions.

For levers with spherical handles, i.e. ball shaped knob on lever shaft, the following dimensions are to be adopted.

HANDLE DIAMETER		
FINGER GRASP	HAND GRASP	
13 mm	38 mm	MINIMUM
38 mm	75 mm	MAXIMUM

Table 7.3:4: Lever Handle Diameters

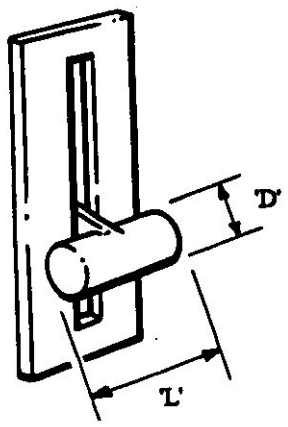

Figure 7.3:11: Heavy Duty Lever

7.3.3.39 Sliding Levers (A2.06)

They provide an alternative to rotary knobs, particularly in column/matrix array when a clear visible identification of the relative setting positions is rapidly obvious or when continuous smooth adjustment in operation is required. Adjustments can be made rapidly, but the control is prone to inadvertent movement.

7.3.3.40 Location

The location and position of sliders, either as single units or in banks, are to be compatible with reach limitations and the natural movements of the human operator (see Part P3 of this Standard). Panel mounted banks of more than five controls are to be inclined to the horizontal and be symmetrical about the operator's body centreline.

7.3.3.41 Recommended Dimensions.

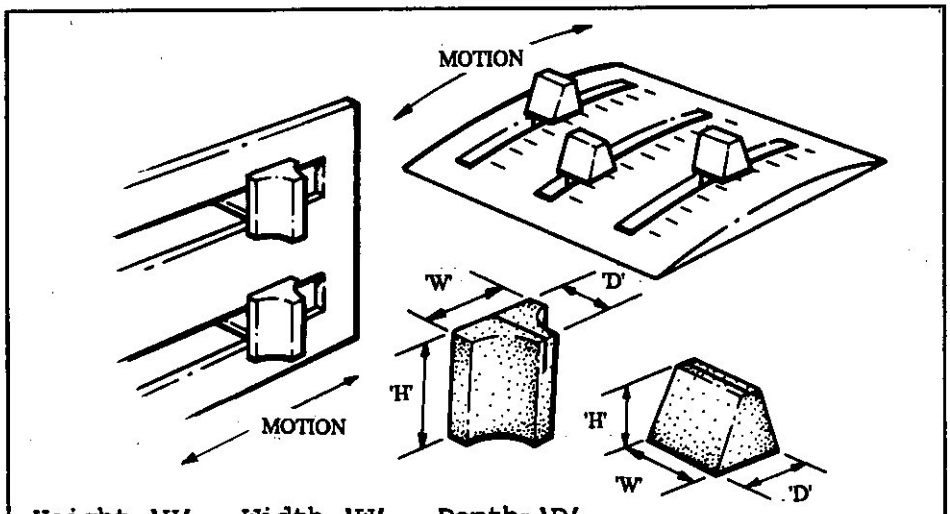

Height='H' Width='W' Depth='D'

'H' 18mm	'W' 15mm	'D' 13mm	Minimum Bare Handed
'H' 25mm	'W' 20mm	'D' 20mm	Gloved Hand Operation

EDGE SPACING:

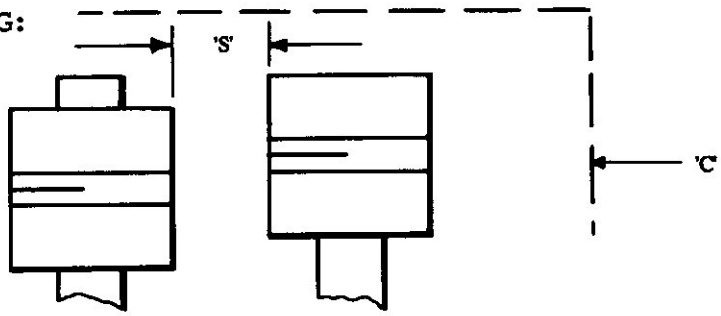

Edge Spacing='S' Clearance='C'

'S' 20mm	'C' 25mm	Bare Handed Operation
'S' 25mm	'C' 30mm	Gloved Hand Operation

Figure 7.3:12 Sliding Lever Dimensions

7.3.3.42 Shape

Sliding lever handles should be tab-shaped with the long dimension of the control perpendicular to the axis of motion.

7.3.3.43 Displacement Resistance

Sliders should adopt the following resistances 2.8N Minimum; 110N Maximum.

7.3.3.44 Direction of Motion

In general a functional increase should be governed by movements of the control up, to the right and forward. It is recommended that sliders used in vehicle control should be as follows:

Panel orientation	Control movement	Vehicle response
Vertical	Up/down	Surface/dive
Horizontal	Left/right	Turn to port/starboard Trim to port/starboard
Longitudinal	Forward/backward	Go ahead/astern Pitch Nose down/up Fast/Slow

7.3.3.45 Other Requirements

Labelling of lever function and direction of motion should be provided. Where practical limb support should also be provided for fine or continuous adjustment.

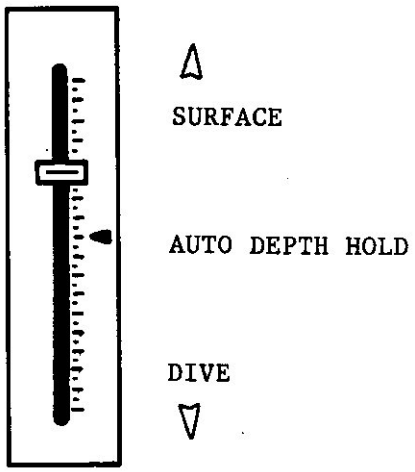

Figure 7.3:13: Sliding Lever

7.3.3.46 Pedals (A2.07)

Pedals require the operator to be seated and may be used when the operator's hands are occupied. Precise control is difficult with a single foot but this can be improved by the use of both feet as in a rudder bar.

7.3.3.47 Location

Pedals should be placed within reach limitations and the natural movements of the operator (see Part P3 of this standard) to avoid unnatural and awkward body positions.

7.3.3.48 Recommended Dimensions

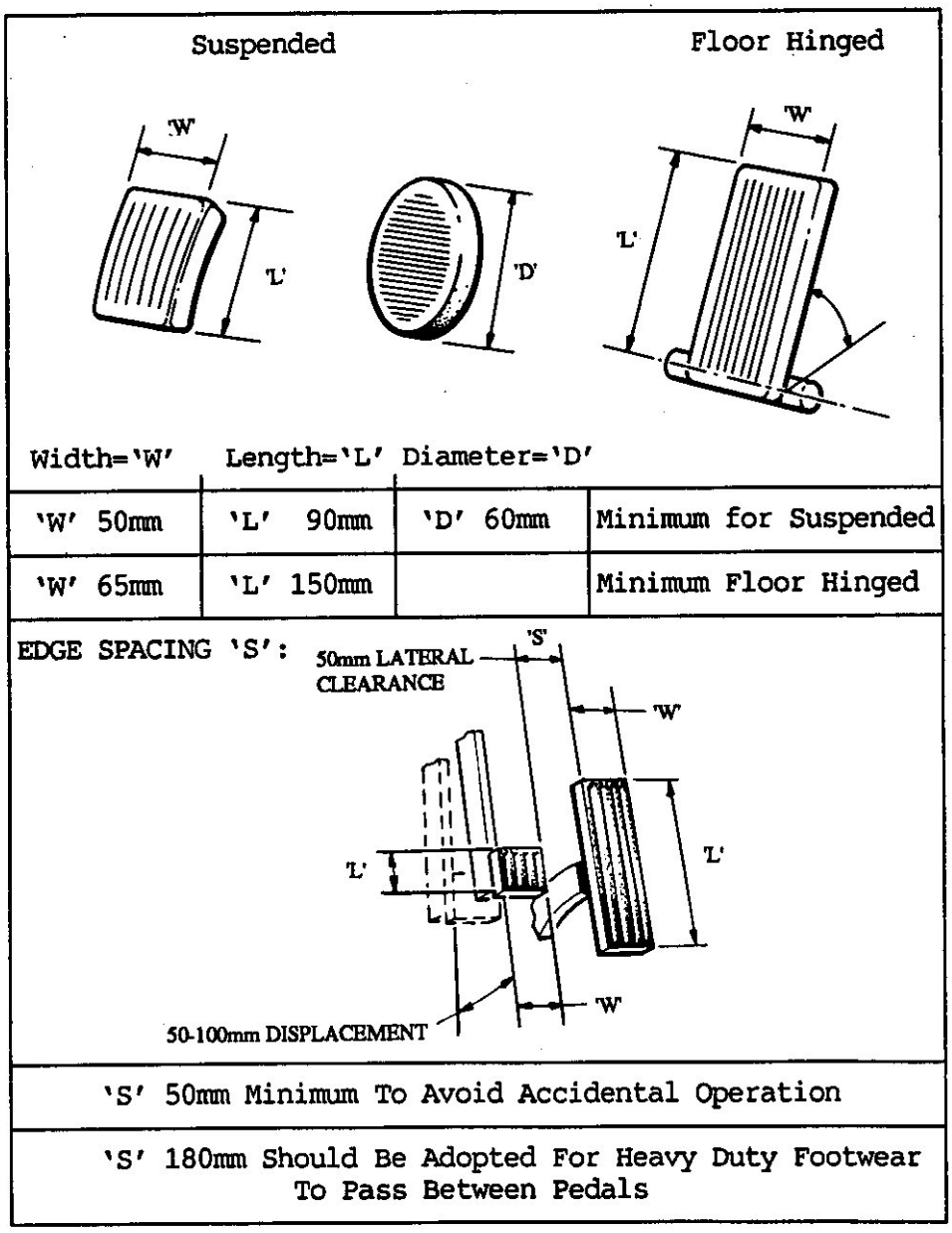

Figure 7.3:14 Pedal Dimensions

7.3.3.49 Shape

Pedals can be a variety of shapes but in some applications flanges to support the heel or toecaps can be useful. Tread to prevent slip is to be provided. For brake and clutch application, suspended type rectangular or circular shape is recommended. For accelerator application a rectangular/oblong shape can be used.

7.3.3.50 Displacement Resistance

Brake 45–70 N maximum, with a movement displacement of 50–100 mm. Clutch 450 N maximum, with a movement displacement of 40 – 180 mm maximum. Accelerator 45–90 N maximum, with a movement displacement arc of 30º maximum for ordinary shoes and 20º for heavy boots.

7.3.3.51 Direction of Motion

A push force is used to activate the control.

7.3.3.52 Other Requirements

For aircraft rudder/brake applications consult establishments with aircraft pedal design expertise. See Defence Standard 00-970.

7.3.3.53 Joystick (A3.08)

Joysticks may be used when continuously variable control is required in two axes simultaneously. The design configuration of joysticks is dependent on how they will be manipulated with the whole hand, finger and thumb, or thumb alone. In functional terms joysticks may be divided into two main classes, force sensitive (Isometric) and displacement sensitive (Isotonic).

7.3.3.54 Location

The location will depend on the requirements of the task, the position and other activities which the operator must perform and the space required for the installation of the control and its operation.

7.3.3.55 Recommended Dimensions

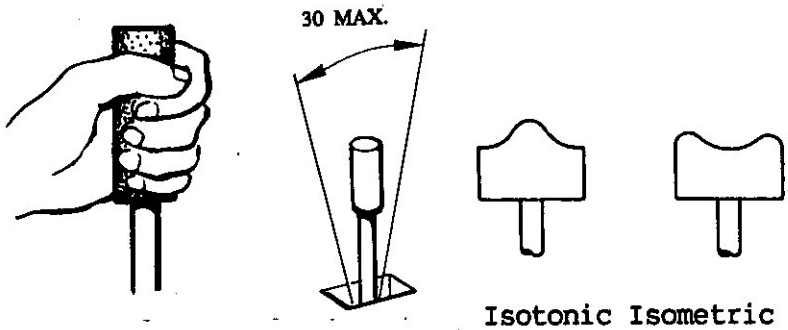

	Whole hand Min	Whole hand Max	Thumb & Finger Min	Thumb & Finger Max	Isotonic Thumb Maximum	Isometric Thumb Min	Isometric Thumb Max
Grip Dia	30mm	50mm	6.5mm	16mm	10mm	15mm	22mm
Shaft Lth	110mm	180mm	70mm	150mm			

EDGE SPACING:

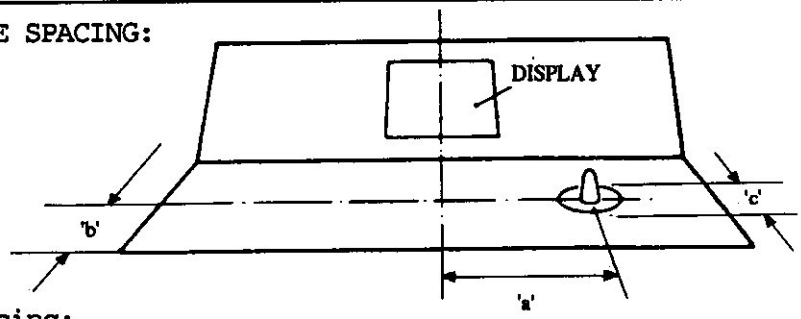

Spacing:	Display ℄ to Controller 'a'	Control to Front Edge 'b'	Space Around Control 'c'
Min	0mm	120mm	
Max	400mm	250mm	Max stick excursion +100mm

Figure 7.3:15: Joystick Dimensions

7.3.3.56 Shape

The shape of the joystick will depend on how it is to be manipulated.

7.3.3.57 Displacement Resistance

Maximum operating force for Isometric, whole hand grip, 118 N. Thumb & finger, 3.3-4.5 N. Thumb, 9-22 N. Maximum operating arc for Isometric is recommended at 30º and Isotonic 45º.

7.3.3.58 Direction of Motion.

Multi-axial and is to move in the expected direction for the response.

7.3.3.59 Other Requirements

For cursor control for the designation of points on a visual display, isotonic joysticks are more suitable. For dynamic tracking tasks either type is suitable, depending on how it is to be manipulated. Use whole hand grip, when it is necessary for the operator to perform additional functions with the controlling hand. Support may be provided for wrist/forearm of the operator. Sharp edges are to be avoided at the points that will be gripped.

7.3.3.60 Joystick System Control

a. Control law. The control law of a joystick system will reflect the dynamics of the mechanical construction of the device itself, but may be manipulated by the designer by electronic means to optimize the performance of the entire system. The mechanical construction of a device will influence its dynamic characteristics. The following factors will have a direct bearing on the force/displacement characteristics of a device:

   i. Linearity;
   ii. Breakout;
   iii. Deadspace;
   iv. Stiffness;
   v. Friction, viscous and static;
   vi. Mass or inertia;
   vii. Backlash.

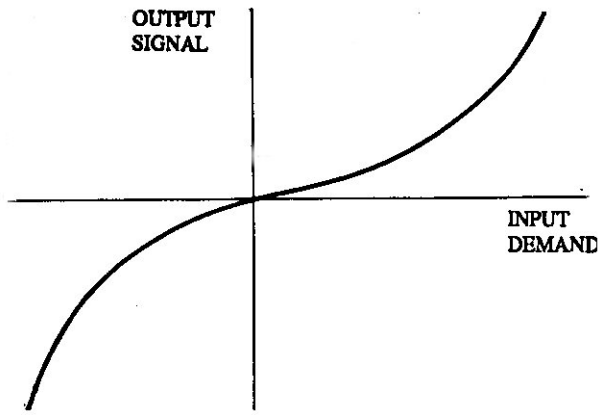

Figure 7.3:16 Joystick input/output Control Law

It is possible to obtain measures of these parameters for a given joystick, definitions of optimal levels cannot be given as they will tend to be task specific.

b. Signal shaping Target acquisition requires a relatively high controller sensitivity compared with fine tracking. These different requirements may be accommodated in a rate controlled system by the incorporation of non-linearity in the input-output relationship of the joystick. This is normally best achieved by electronic shaping of the output signal of the controller. In acquisition, a large demand is required to achieve a high rate of movement of the controlled element. Shaping will result in large demands giving rise to disproportionately large system responses. In fine tracking, small demands around the origin are required and can be associated with less sensitivity; this pattern is inherent in the shaping network shown.

Control laws and control sensitivities should be similar in the different axis of operation, and the sense of the control, the directional relationship between input demand and system response, should meet with the expectations of the operator.

7.3.4 Preferred Physical Specifications for Discrete Controls: Rotary

7.3.4.1 Selector Switches (B1.09)

The use of rotary selectors is recommended for three to twenty four mutually exclusive operating modes.

7.3.4.2 Location

The vertical position of rotary selectors is recommended, this will depend on the requirements of the task and is to be compatible with reach limitations and the natural movements of the human operator.

7.3.4.3 Recommended Dimensions

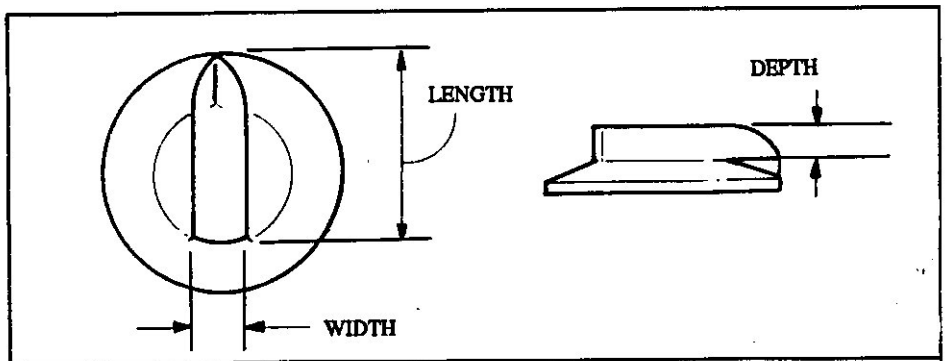

Length 'L'	Width 'W'	Depth 'D'	
100mm If Gloves Are Worn 113mm	25mm	75mm	Maximum

EDGE SPACING 'S':

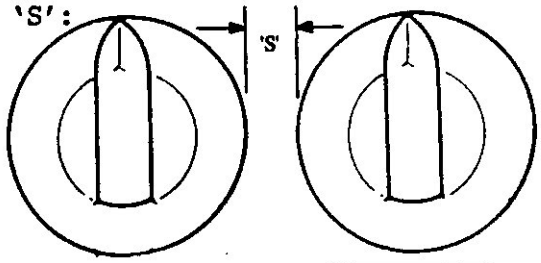

Where Adjacent Controls Operated Simultaneously	Where Adjacent Controls Operated Serially	
75mm	25mm	Minimum
125mm	50mm	Preferred

Figure 7.3:17: Selector Switch Dimensions

7.3.4.4 Shape

Bar shaped with index tapered point should normally be used, this has the advantage of prompt visual identification of control position.

7.3.4.5 Displacement Resistance

Switch resistance should be elastic, building up towards each discrete position then dropping suddenly. Thus the control is to snap into position with an audible click, without the possibility of stopping between adjacent switching positions. Operation torque of the 115 mNm minimum to maximum of 226 mNm for the smaller size, or 680 mNm for the larger sizes.

7.3.4.6 Direction of Motion

Setting values should increase with a clockwise motion. Operating position should be orientated around the switch according to the following schemes, adopted from MIL STD 1472F.

No of Switch Settings	Recommended Starting Positions (degrees)			Recommended Angular Displacement Between Positions (degrees)
	Operation with			
	Left Hand	Either	Right Hand	
3	16º	320º	264º	40º
4	351º	302º	253º	39º
5	328º	286º	243º	37º
6	306º	207º	234º	36º
7	286º	255º	225º	35º
8	267º	242º	217º	34º
9	249º	229º	209º	33º
10	232º	217º	202º	32º
11	216º	206º	195º	31º
12	0, 90, 180º	0, 180º	180, 270 or 360º	30º

Figure 7.3:18 Desirable Switch Positioning

7.3.4.7 Other Requirements

The knob attachment is to preclude the possibility of the knob slipping on being replaced with index out of position. Moving pointer with a fixed scale shall be used. The Parallax between pointer and scale is to not exceed 25% of distance between index marks. This can be done by mounting the pointer close to the scale.

7.3.4.8 Thumbwheels (B1.10)

The use of thumbwheels is recommended for up to 10 mutually exclusive operating modes. Each wheel should be graduated from zero to nine.

7.3.4.9 Location

For inputting numerical sequence, it is recommended that the thumbwheels be mounted with the centre-line horizontal. Vertical panel mounting is preferred, this will depend on the requirements of the task and should be compatible with reach limitations and the natural movements of the human operator (see Part P3 of this Standard).

7.3.4.10 Recommended Dimensions

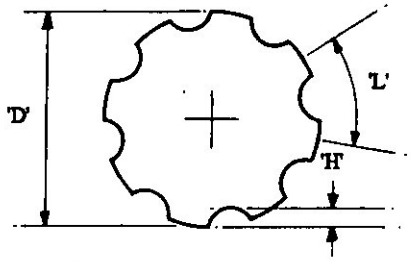

Diameter 'D'	Trough Distance 'L'	Width 'W'	Depth 'H'	
30mm	11mm	5mm	3mm	Minimum
75mm	19mm	10mm	6mm	Maximum

EDGE SPACING 'S':

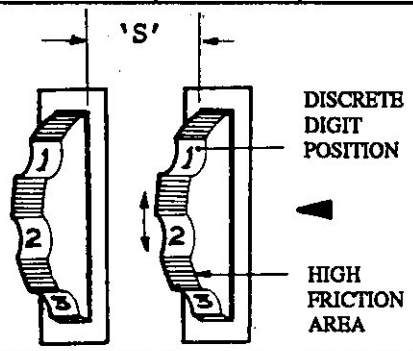

	Single Operated Adjacent Controls	Where Adjacent Controls Are Operated Serially	
'S'	25mm	15mm	Minimum

Figure 7.3:19 Thumbwheels Dimensions

7.3.4.11 Shape

In contrast to continuous operation thumbwheels, each discrete position on the circumference should have a concave surface, inscribed with the position digit and separated by a high friction area raised from the periphery of the thumbwheel. It should not have any sharp edges.

7.3.4.12 Displacement Resistance

The resistance of discrete thumbwheels should be elastic, building up towards each discrete position then dropping suddenly. Thus the control should snap into position with an audible click, without the possibility of stopping between adjacent switching positions. Operation torque of 1.7 N minimum to maximum of 5.6 N should be provided.

7.3.4.13 Direction of Motion

An upward, right, or forward movement of the control should be associated with an increase in setting.

Conversely, a downward, left or backward movement of the control should be associated with a decrease in setting.

7.3.4.14 Other Requirements

Internal illumination of units should be provided when ambient illumination is below 3.5 cd/m^2 (see Part HFE4 of this Standard). In conditions of adequate ambient illumination, black digits engraved on a light concave background may be used (see Part HFE8 of this Standard) with a character height of 5 mm minimum.

7.3.4.15 Key Operated Switches (B1.11)

These are used only to restrict operation of equipment to authorized personnel.

7.3.4.16 Location

The proposed location should be assessed in the context of the task, workspace and other controls being used.

7.3.4.17 Recommended Dimensions

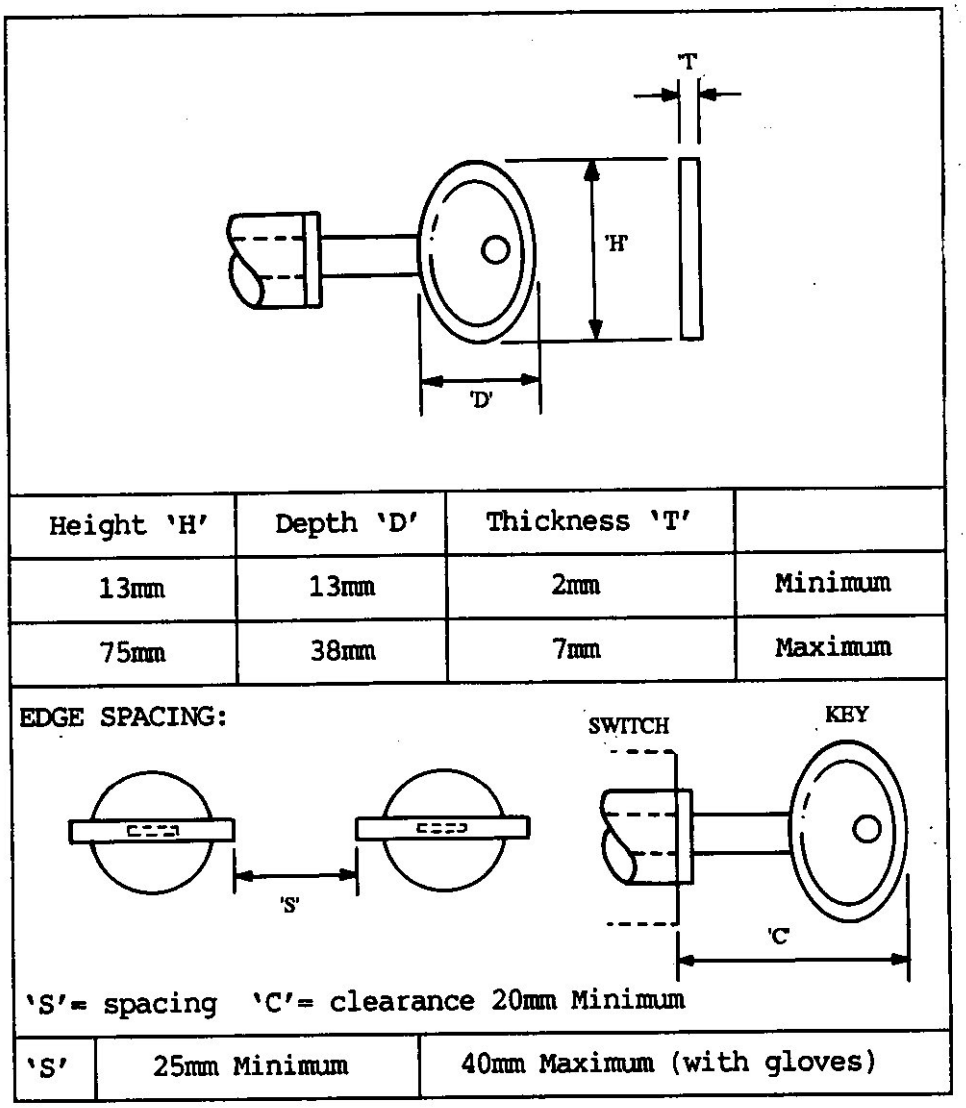

Height 'H'	Depth 'D'	Thickness 'T'	
13mm	13mm	2mm	Minimum
75mm	38mm	7mm	Maximum

'S'	25mm Minimum	40mm Maximum (with gloves)

Figure 7.3:20 Key Operated Switch Dimensions

7.3.4.18 Shape

Most common shapes are acceptable. It is preferred that duplicate keys have the same shape.

7.3.4.19 Displacement Resistance

The resistance of 115 mNm Minimum, to 680 mNm Maximum should be used. Key angular displacement for two function switches, i.e. 'ON – OFF' 30º Minimum, 90º Maximum. The total angular displacement for multifunction key operation switches should not exceed 120º.

7.3.4.20 Direction of Motion

Switch orientation, two function switches with the 'OFF' position in the vertical position and multifunction switches with the 'OFF' at 300º (from the vertical) and activation in a clockwise turn.

7.3.4.21 Other Requirements

It is preferred that the key is only removable in the 'OFF' position and that positional markings/labels should be provided. In the outdoor environment weatherproofing is recommended.

7.3.4.22 Keylocks (B1.12)

Characteristics for keylocks are associated with latch systems. These are used only to restrict access to doors, cabinets and drawers to authorized personnel.

The keylock location needs to be assessed in terms of if the proposed position is suitable, with sufficient clearance for the hand to turn the key without interference. Keylocks should conform to the following guidelines as demonstrated in Figure 7.3:21 below.

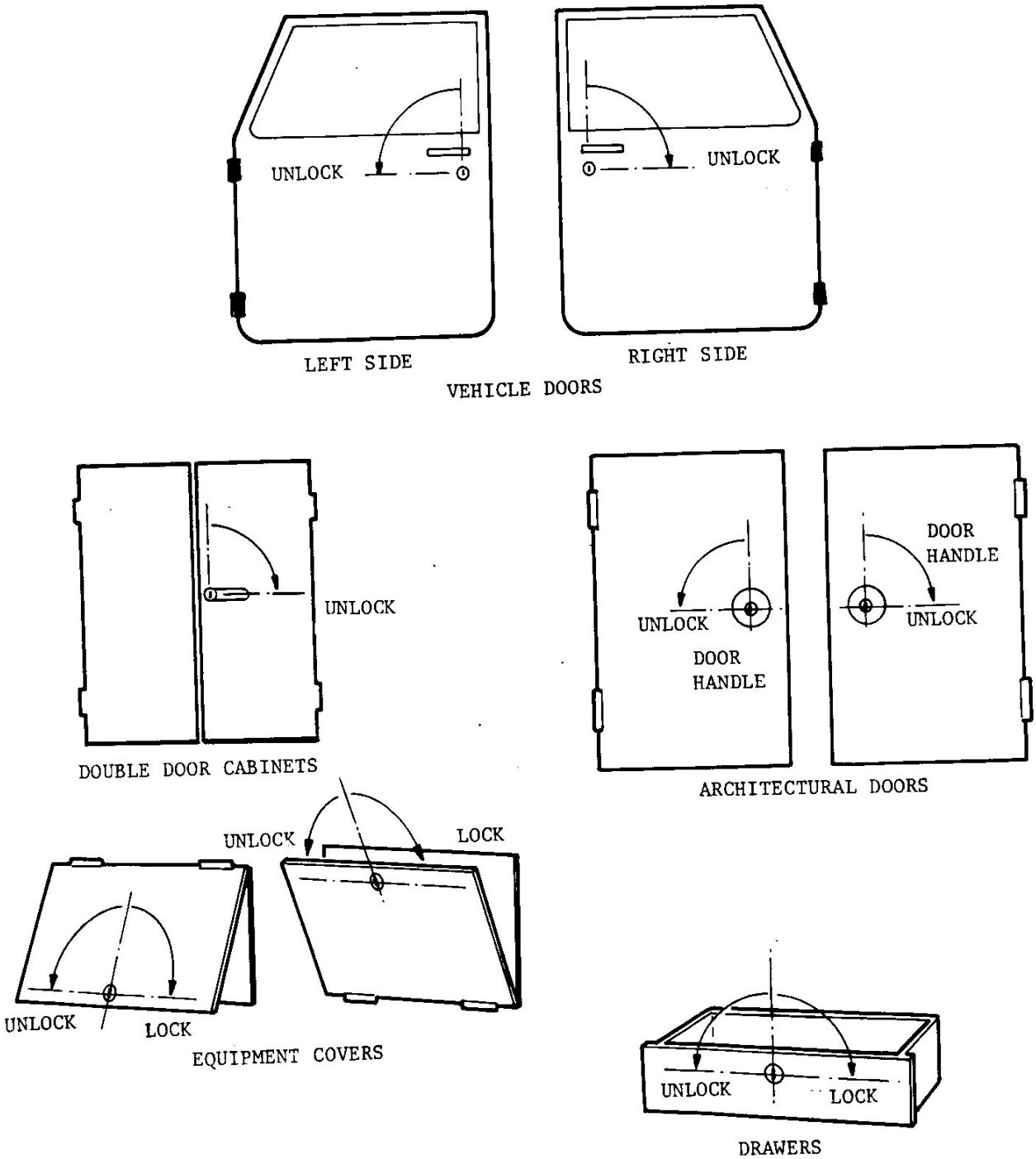

Figure 7.3:21: Keylock Location

Figure 7.3:22 below demonstrates the recommended keylock dimensions:

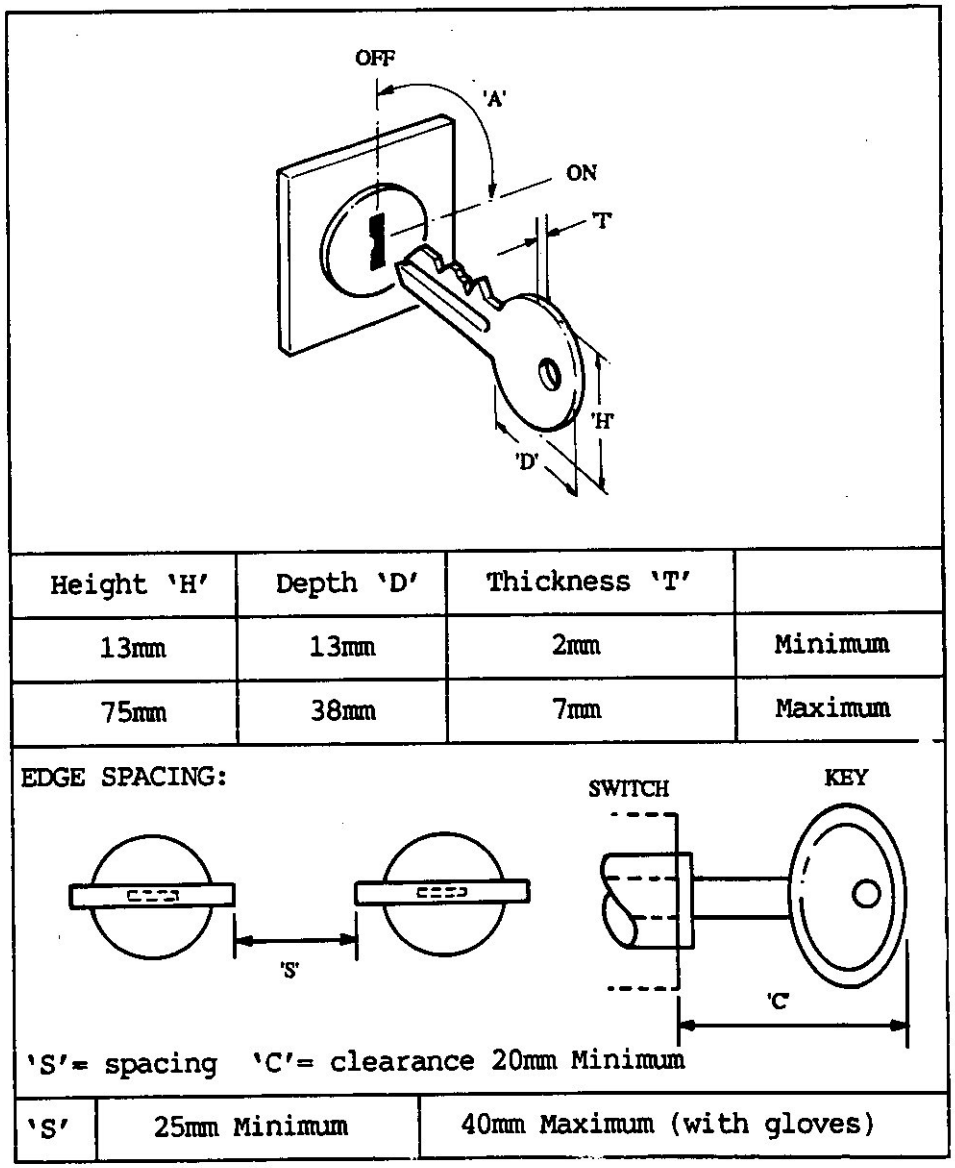

Height 'H'	Depth 'D'	Thickness 'T'	
13mm	13mm	2mm	Minimum
75mm	38mm	7mm	Maximum

'S'	25mm Minimum	40mm Maximum (with gloves)

Figure 7.3:22 Keylock Dimensions

Most common keylock shapes are acceptable. It is preferred that duplicate keys have the same shape.

The resistance of 115 mNm Minimum, to 680 mNm Maximum should be used. Key angular displacement for two function switches, i.e. 'ON-OFF' 30º Minimum, 90º Maximum (from the vertical).

Keylocks should conform to the following guidelines: key orientation for vehicle doors; the vertical position to 'LOCK' and turn towards the door hinge to 'UNLOCK'. Door and drawer locks are normally right-handed. With key orientation vertical turning to the right to lock.

Vehicle door key locks should be designed to lock with the key to prevent the operator from locking keys inside the vehicle. In the outdoor environment weatherproofing is recommended. Reversible keys should be used, keys which will operate with the lock either way up. However, if keys with teeth on only one side are used they should be inserted with the teeth uppermost.

7.3.4.23 Toggle Switches (B2.13)

These are used for selecting between two, or at the most three, operating modes. With three positions, centre is normally 'OFF'. They provide a very clear visible indication of operating condition and are used when space is limited, but they can be prone to accidental activation.

7.3.4.24 Location

Assess if the proposed position is suitable, with sufficient clearance for the hand.

7.3.4.25 Recommended dimensions

The length and width of toggle switches should conform to the following for a variety of toggle shapes.

TYPE	Width 'W' TIP		Length 'L' Bare Finger		Length 'L' Gloved Hand	
	Min	Max	Min	Max	Min	Max
TOGGLE 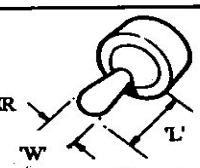	4.5mm	7.8mm	13mm	30mm	38mm	50mm
BALL 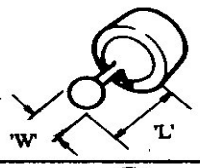	4.5mm	7.8mm	13mm	30mm	38mm	50mm
PADDLE 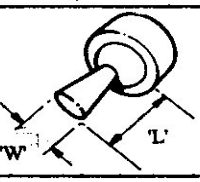	7mm	19mm	13mm	50mm	38mm	50mm

EDGE SPACING:	Bare finger Min	Bare finger Max	Gloved hand Min	Gloved hand Max
Horizontal array(→) switch '℄' to '℄'				
Single Switch Operation	19mm	30mm	32mm	43mm
Sequence Operation	19mm	25mm	32mm	38mm
Simultaneous Operation	19mm	28mm	32mm	41mm
Vertical array(↓)				
Upper row, toggle 'DOWN'	25mm		38mm	
Lower row, toggle 'UP'				

Figure 7.3:23 Toggle Switch Dimension

7.3.4.26 Shape

Toggle, ball & paddle shapes are acceptable.

7.3.4.27 Displacement Resistance

The switch should be provided with an elastic resistance which gradually increases and then drops as the switch control snaps into position with an audible click without the possibility of stopping between adjacent switching positions. Smaller size switches are to have a resistance of 2.8 – 4.5N, and larger size switches a resistance of 2.8 – 11N. Angular displacement for two position switches is 30º Minimum - 120º Maximum for three position switches is 40º - 0.60º Minimum, 60º - 0.60º Maximum.

7.3.4.28 Direction of Motion

A vertical direction of motion is preferred, 'DOWN' corresponding to 'ON', 'INCREASE' and 'GO' in the UNITED KINGDOM. NOTE: The USA switching norms are reversed.

7.3.4.29 Other Requirements

To prevent accidental activation, channel or barrier guards can be considered with tip clearance of 13 mm minimum, up to 32 mm maximum for gloved operation.

7.3.4.30 Selection Levers (B2.14)

These should be used when large mechanical forces are necessary in selecting operating mode and/or when operating position must give a clear visible indication. The necessity to operate with a positive movement makes levers useful in safety critical operations, i.e. power on/off. If spring biased to 'OFF', these should be used to operate a power cut-off which will deactivate a system in the event of operator incapacitation or inattention, i.e. a 'dead man's handle'.

7.3.4.31 Location

The location and position of selection levers relative to the operator should be compatible with reach limits, mobility, natural movements and strength capabilities (see Part P3 of this Standard).

7.3.4.32 Recommended Dimensions

For discrete selection lever configurations, designers should refer to similar illustration for relevant shapes and dimensions (see Section 7.3.3.31).

Lever Applications	Dimensions & Clearance 'C'
Gear shift 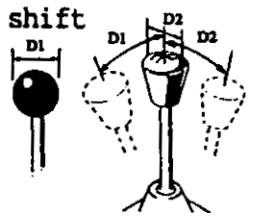	Spherical Knob 'D1' 30mm Minimum-44mm Maximum 'C' 80mm Minimum Cone Knob 'D2' 30Min-40mm Max 'C' 80mm Minimum
Automatic Transmisson 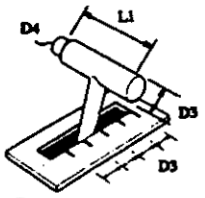	Cylindrical Handgrip 'L1' 70mm Minimum 'D3' 19Min-28mm Max 'C' 70mm Minimum Release Button 'D4' 15mm Minimum-20mm Maximum 'C' 50mm Minimum
Handbrake 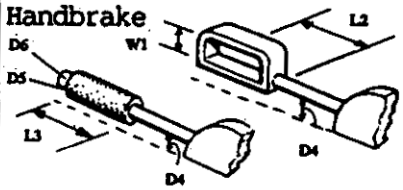	Internal Handgrip 'L2'110mm Minimum 'W1' 50mm Minimum Cylinderical & Release Button 'L3'100mm Minimum 'D5' 25mm Minimum-32mm Maximum 'D6' 15mm Minimum-20mm Maximum 'C' 50mm Minimum
Tab (Two-position, spring biased to off) 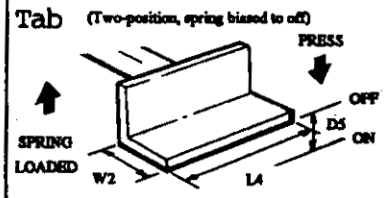	Tab 'L4' 25mm Minimum-45mm Maximum 'W2' 19mm Minimum-30mm Maximum 'C' 50mm Minimum

Figure 7.3:24 Selection Lever dimensions

7.3.4.33 Shape

The length of the selection lever can be determined after considering the mechanical advantage of the system, operator position and the limitations of the 5th percentile operator (see part P3 of this Defence Standard). Handle shape can be either cylindrical, spherical or shaped to fit the hand grip as required but with no sharp edges. Anti-slip texturing may be applied.

7.3.4.34 Displacement Resistance

Displacement and Resistance values should conform to the following:

Gear shift:
Displacement: Centre-forward/back 'D1' 125 mm Minimum 250 mm Maximum.
Centre-right/left 'D2' 125 mm Minimum 250 mm Maximum.
Resistance: Centre-forward/back 'd1' should not exceed 127 N
Centre-right/left 'd2' should not exceed 88 N

Automatic Transmission:

Displacement between settings ‘d3 25 mm Minimum 50 mm Maximum.
Resistance of lever with release button depressed, 90 N Min 127 N Max.

Handbrake:

‘d4’ Displacement should be restricted to a nominal range of 100-125 mm
Lift up Resistance, 98N Minimum 245N Maximum.

Tab:

‘d5’ Displacement On-off 25 mm Minimum 75 mm Maximum
Press down Resistance, 4.5N Minimum 27N Maximum.

7.3.4.35 Direction of Motion

For Gear shift levers, it is recommended that the action is from neutral left/forward to 1st, backward to 2nd, right/forward to 3rd, etc, and must be lifted to go into ‘Reverse’. Automatic Transmission neutral forward to increase, and backward to decrease. Handbrakes should be pulled ON towards the operator. Tab levers downward for the ‘ON’ position.

7.3.4.36 Other Requirements

To prevent accidents it is to be impossible for a vehicle’s gear shift to ‘jump’ out of gear, and that automatic transmission should not rest between settings.

7.3.4.37 Push-Pull Control (B2.15)

This is a compact control for the selection of two or three mutually exclusive functions. Three-position controls should only be used when selection of the wrong position is not critical. Where panel space is limited, two related but distinct functions, i.e. ‘ON-OFF’ and ‘GAIN’, may be governed by a push-pull/rotary knob.

7.3.4.38 Location

The location and position of push-pull control relative to the operator should be compatible with reach limits, mobility, natural movements and strength capabilities (see Part P3 of this Standard).

7.3.4.39 Recommended Dimensions

Control Type	Dimensions & Clearance
Low Resistance 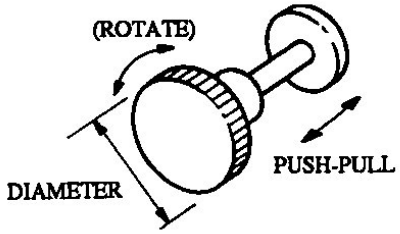 	Diameter: 19mm Minimum Rotation: clockwise = gain Edge spacing:adjacent controls 40mm(55 gloved) Minimum Clearance:behind control, when pushed in, to panel surface. 25mm(28 gloved) Minimum
'T'Bar 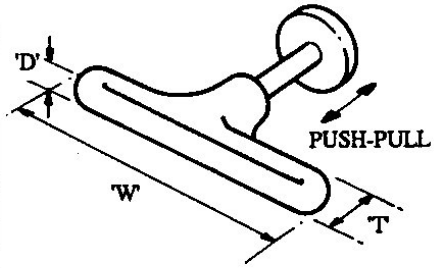 	'W'= width: 100mm Minimum 'D'= depth: 16 Min 38mm Max 'T'= thickness:10 Min 25mm Max Edge spacing:adjacent controls horizonal array 13mm Minimum vertical array 40mm(50 gloved) Minimum Clearance:behind control, when pushed in, to panel surface. 40mm(46 gloved) Minimum
'D'Bar 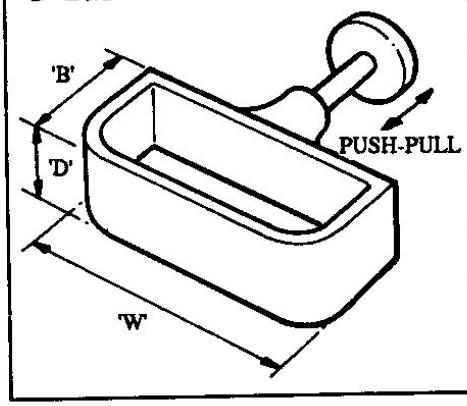 	'W'= wth:100mm(125 gloved) Min 'D'= depth: 16 Min 38mm Max 'B'= grasp breath: 35mm(45 gloved) Maximum Edge spacing:adjacent controls horizonal array 13mm Minimum vertical array 40mm(50 gloved) Minimum Clearance:behind control, when pushed in, to panel surface is covered with grasp breath.

Figure 7.3:25 Push-Pull Control Dimensions

7.3.4.40 Shape

The shape of the push-pull control can be determined after considering the mechanical advantage of the system, operator position and the limitations of the 5th percentile operator (see Part P3 of this Defence Standard). It is not to have any sharp edges, anti-slip texture can be considered.

7.3.4.41 Displacement Resistance

Displacement, the movement from the front of the control in the push position to the front of the control in the pull position, should be Low resistance, 15 mm Minimum 30 mm is preferred. 'T' & 'D' Bar, 25 mm Minimum 50 mm is preferred. Resistance, Push-pull force for two-finger operation of 18 N is desirable. Four finger operation 45 N Maximum should be adopted.

7.3.4.42 Direction of Motion

A pulling motion should correspond to 'ON' or system activation, a pushing motion should correspond to 'OFF' or system deactivation.

7.3.4.43 Other Requirements

The shaft should normally be non-rotating, except where the handler requires an initial turn to disengage or unlock the control or when a combined type is used.

7.3.4.44 Slide Switches (B2.16)

These may be used for sequential selection between two or three discrete positions and are particularly useful when arranged in a matrix where they permit easy visible indication of operating position. They are less compact than rotary selectors.

7.3.4.45 Location

The location and position of slide switches, either as single units or in banks, should be compatible with reach limitations and the natural movements of the human operator (see Part P3 of this Standard). Mounting is normally vertical, except where equipment function makes horizontal mounting more appropriate.

7.3.4.46 Recommended Dimensions

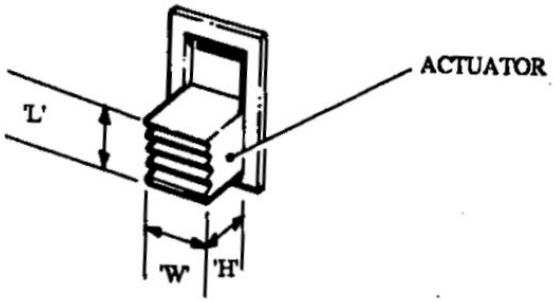

Actuator Height 'H'	Width 'W'	Length 'L'
6mm(13mm Gloved) Minimum	6mm Minimum	5mm Minimum

EDGE SPACING 'S':

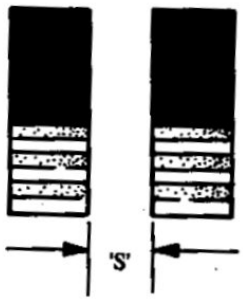

Single Switch Single Finger	Sequence Operation Single Finger	Simult Operation Different Fingers
19mm Minimum	13mm Minimum	16mm Minimum
50mm Maximum	25mm Maximum	19mm Maximum

Figure 7.3:26 Slide Switch Dimensions

7.3.4.47 Shape

The shape is rectangular with a ribbed surface for friction in operation. It is not to have any sharp edges.

7.3.4.48 Displacement resistance

Resistance should be elastic, building up towards each position then dropping. The following resistance can be adopted. Small switches (<9 mm 'H' x 10 mm 'W' x 10 mm 'L') 2.8 N min 4.5 N max. Large switches (>9 mm 'H' x 10 mm 'W' x 10 mm 'L') 4.5 N min 11 N max.

7.3.4.49 Direction of Motion

'Down' or towards the operator is to correspond to 'ON'.

7.3.4.50 Other Requirements

It is recommended where there are more than two positions, that an index mark on the left-hand side of the control be considered.

7.3.4.51 Push Buttons (B4.17)

Finger operation, momentary contact (push & hold 'ON'/release 'OFF'), alternate action (push 'ON') / push 'OFF') these are particularly useful for frequently operated control functions and require little time and effort to activate. Primary applications are in the simple switching between two conditions. A disadvantage is that their state of activation is not readily visible. For emergency applications when rapid and positive action is required, mushroom shaped buttons operated by striking with the fist or palm of the hand should be used.

7.3.4.52 Location

Push buttons are to be located within easy reach of the operator taking into account such constraints as acceleration restraint systems and protective clothing requirements.

7.3.4.53 Recommended Dimensions

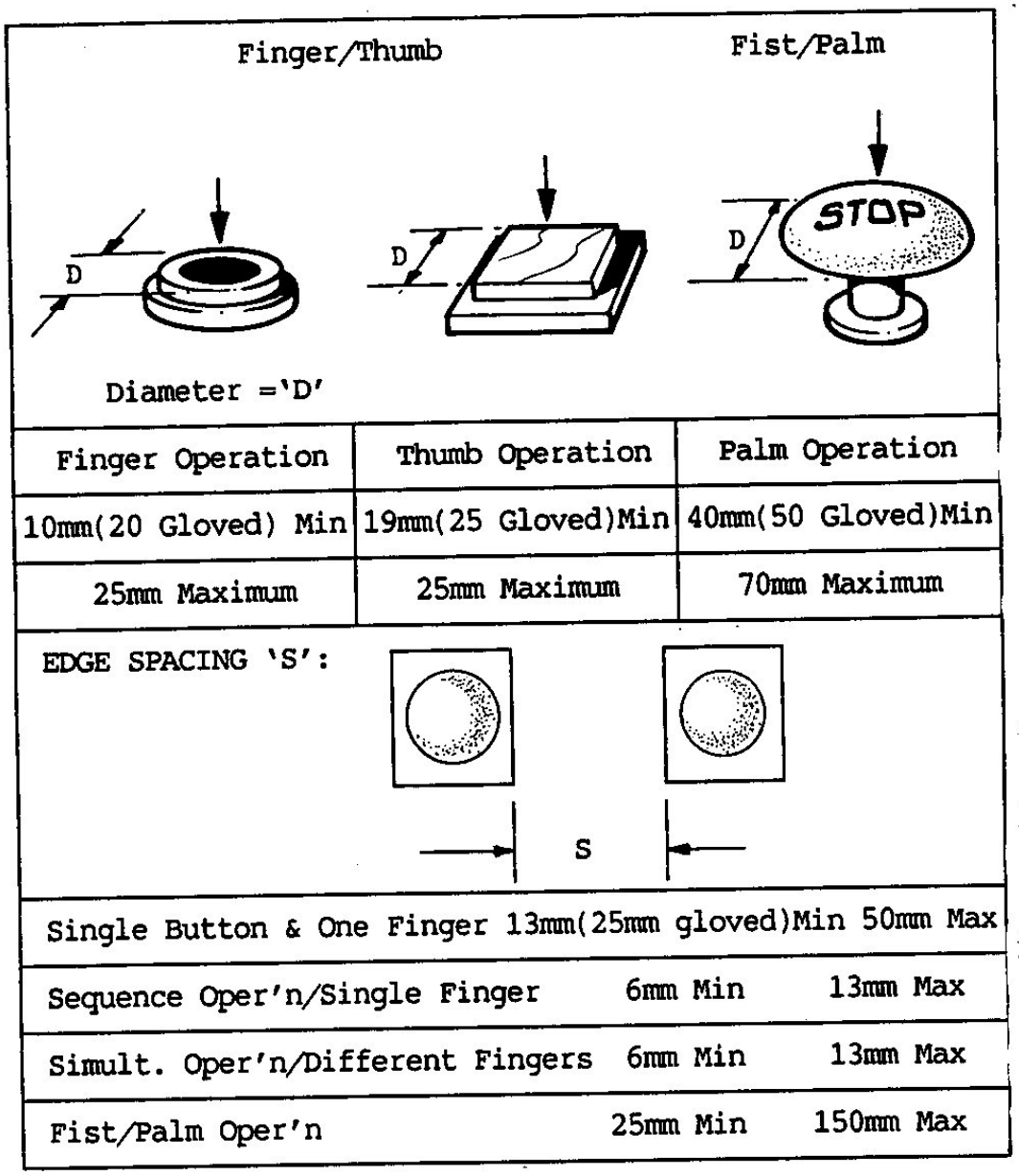

Figure 7.3:27 Push Button Dimensions

7.3.4.54 Shape

Push buttons can be round, square or rectangular in shape, with a concave friction surface to prevent the bare or gloved digit slipping. It is not to have any sharp edges. The mushroom type is to be used for EMERGENCY STOP control only.

7.3.4.55 Displacement Resistance

Resistance can be elastic, starting low and building up rapidly and then drop suddenly with control activation. The following displacement for finger tip operation 2 mm Min 6 mm Max and Fist/palm 3 mm Min 38 mm Max can be adopted. The following resistances for: Single finger operation 2.8 N Min 11 N Max. Simultaneously operation using different fingers 1.4 N Min 5.6 N Max and Fist/palm operation 2.8 N Min 23 N Max can be adopted.

7.3.4.56 Direction of Motion

Pushing the button down should correspond to 'ON' or system activation. Striking the mushroom EMERGENCY STOP control type is to deactivate the system.

7.3.4.57 Other Requirements

To prevent accidental activation, the button can be recessed into the control panel. Locating of mushroom EMERGENCY STOP controls away from any other controls may help prevent accidental activation. Finger or thumb operated push buttons should possess a high friction or concave surface to prevent the bare or gloved digit slipping. Where prevention of accidental activation is important, a channel or cover guard is to be provided. The guard is not to interfere with the function of the control. The three main types of push button function are latching, push-on and lock-on. Activation may be indicated by an audible click, where possible, accompanied by a sudden drop in resistance. The button can remain depressed until the circuit is deactivated. Control position is not easily identifiable visually, so either backlighting or a display indicating control position may be used for critical functions or dimly lit workplaces.

7.3.4.58 Legend Switches (B4.18)

These are a special type of push button switch and are used to display qualitative information on system status, which requires the operator to activate the control associated with it. Appropriate to use when functional grouping or matrix of control switches and indicators is required, but space is very limited. There are two main types 'Illuminated', where the legend is visibility illuminated when the switch is activated or 'Permanent' where the legend is visible whatever the state of the switch.

7.3.4.59 Location

Legend switches are to be located within easy reach of the operator taking into account such constraints as acceleration restraint systems and protective clothing requirement.

7.3.4.60 Recommended Dimensions

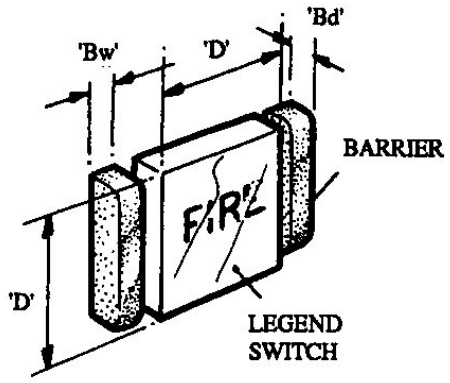

Switch Dimension 'D'	Barrier Width 'Bw'	Barrier Depth 'Bd'
19mm(25mm Gloved)Min	3mm Minimum	5mm Minimum
38mm Maximum	6mm Maximum	6mm Maximum
EDGE SPACING: Should Correspond To Barrier Width'Bw'		

Figure 7.3:28: Legend Switch Dimensions

7.3.4.61 Shape

Legend switches can be square or rectangular in form. It is not to have any sharp edges.

7.3.4.62 Displacement Resistance

Activation of the control can be indicated by a positive tactile or auditory cue, i.e. a 'click'. In the case of integral illuminated the legend is to be lit.

		RESISTANCE		DISPLACEMENT	
		MINIMUM	MAXIMUM	MINIMUM	MAXIMUM
STANDARD LEGEND SWITCHES		2.8N (5.6N for use in moving vehicles)	16.7N	3mm	6 mm
Membrane/ Tactile Legend Switch	'Dome Snap Action' Contact	1.5N	2.5N	0.7mm	1.0 mm
	'Conductive Membrane Contact'	2.ON	3.ON	0.5 mm	1.0 mm

Figure 7.3:29: Legend Switch Displacement Resistance

7.3.4.63 Direction of Motion

Pushing the button down is to correspond to 'ON' or system activation.

7.3.4.64 Other Requirements

For illuminated switches, the switch illumination is to be replaceable from the front of the panel by hand, with the legend covers keyed to prevent the possibility of interchanging the legends. The illumination reliability should be greater than 100,000 hrs 'Mean Time Between Failure' (MTBF).

7.3.4.65 Foot Operated Switches (B4.19)

These are a special type of push button switch and are used where the operator's hands are occupied and normally located out of his view. Applications are to be limited to infrequent operations.

7.3.4.66 Location

Located within the operator's leg reach (see part P3 of this Standard). The position of the foot switch is to permit operation by the toes and the ball of the foot, rather than the heel. It ought to be clear of any obstruction so that the ball of the foot can centre on the switch and the heel rest on the floor.

7.3.4.67 Recommended Dimensions

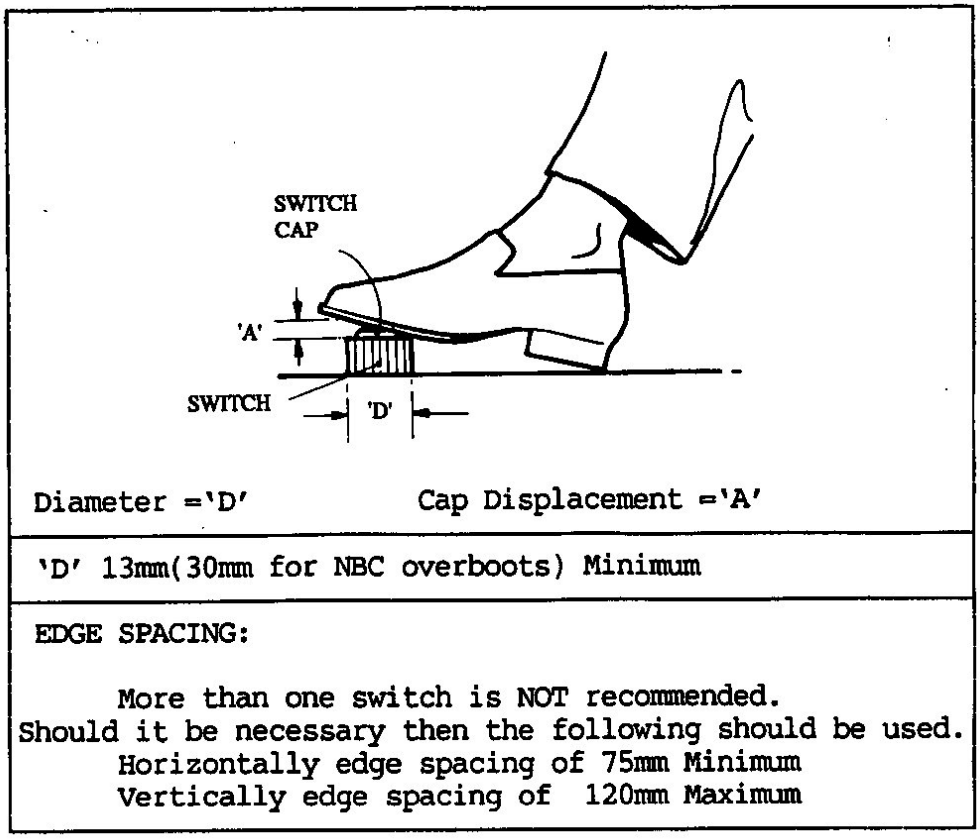

Figure 7.3:30: Foot Operated Switch Dimensions

7.3.4.68 Shape

Normally round. It is not to have any sharp edges.

7.3.4.69 Displacement Resistance

Resistance ought to be elastic, starting low and building up rapidly and then drop suddenly with an auditory 'click' as the control is activated. Displacement of 13 mm (25 mm using heavy footwear) Min 65 mm Max, Resistance of 45 N with foot resting on the switch (18 N with foot NOT resting on the switch) 90 N Max should be adopted.

7.3.4.70 Direction of Motion

Pushing the switch cap down is to correspond to 'ON' or system activation.

7.3.4.71 Other Requirements

The switch cap is to have a high friction surface. A safety requirement is that rubber cap covers should not be used.

7.3.4.72 Rocker Switches (B4.20)

These are available as an alternative to the toggle switch in the selection between two conditions, especially where the protruding handle of the toggle switch presents a hazard. The operating position of a rocker switch is not as readily visible as that of the toggle switch.

The three position rocker switch should only be used where a rotary switch is inappropriate, i.e. due to limitation in available panel space. More than three positions are not to be used.

7.3.4.73 Location

Vertical orientation of rocker switches can be adopted except where compatibility with the controlled function or equipment location makes a horizontal orientation more appropriate.

7.3.4.74 Recommended Dimensions

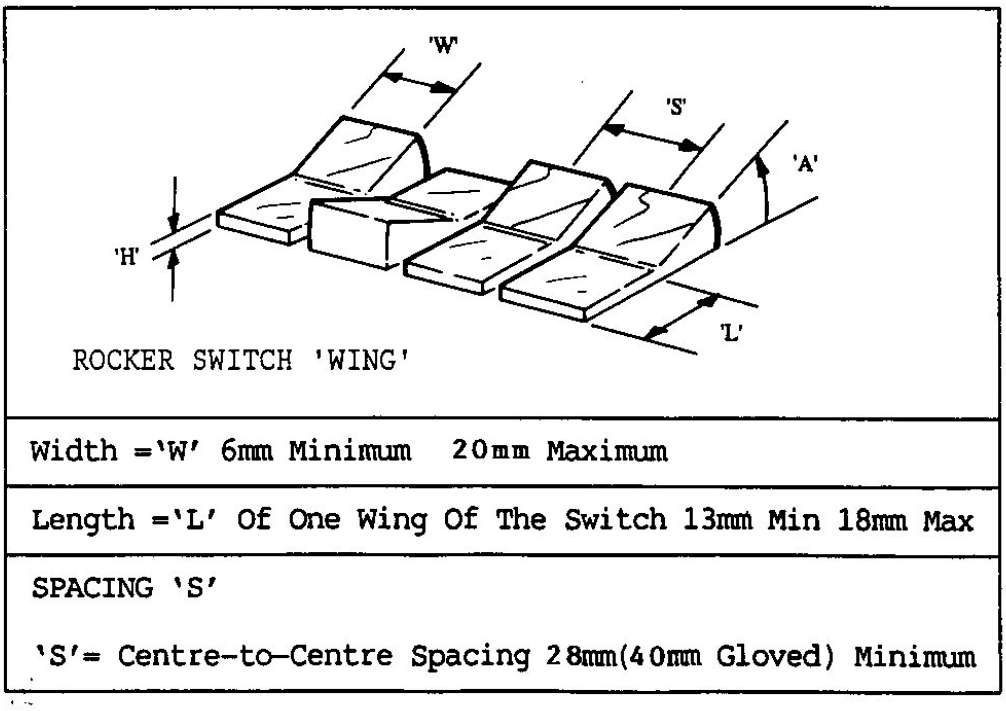

Figure 7.3:31: Rocker Switch Dimensions

7.3.4.75 Shape

Normally rectangular wing shape. It is not to have any sharp edges.

7.3.4.76 Displacement Resistance

Resistance should gradually increase and then drop as the switch snaps into position with an auditory 'click' as the control is activated. When the wing is depressed, height 'H' – 3mm Min 5 mm Max, the raised wing angle 'A' should be 30º Min 50º Max. Resistance of 2.8 N Min 11 N Max should be adopted.

7.3.4.77 Direction of Motion

For vertical orientation, activation of the switch by pressing down the lower wing should correspond to 'ON'. When horizontal orientation, activation of the switch by pressing down the right hand wing should correspond to 'ON'.

7.3.4.78 Other Requirements

Conspicuous switch position cues may be provided by alternate colour or contrast for 'ON' and/or 'OFF' settings. An illuminated 'ON' position is useful as another feedback cue (see Part HFE4 and of this Standard).

7.3.5 Preferred Physical Specifications For Data Entry Controls

7.3.5.1 Keyboards/Membrane Keys (C5.21)

These have the advantage of wide user acceptance in the context of data entry, changing to alternative character sets by the use of a shift key. The standard typewriter, QWERTY key configuration is used where a general purpose entry requirement cannot be satisfied by numeric keypads.

7.3.5.2 Location

The keyboard should be located horizontally or at approximately the level of the elbow of the seated operator and directly in front of the operator. Where possible the keyboard is to be detachable to permit the operator to place it where it is most comfortable.

7.3.5.3 Recommended Dimensions

Layout Of Keys For Typical Typewriter

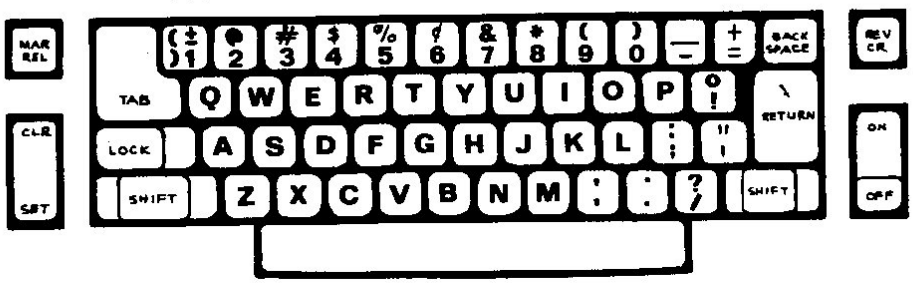

KEY SIZE, For Low Level Vibration Environment

Bare Handed 10mm Minimum	19mm Maximum	14mm Preferred
Gloved 15mm Minimum		22mm Preferred
KEY SIZE, Vehicle Applications		
Bare Handed 10mm Minimum	25mm Maximum	
Gloved 19mm Minimum	25mm Maximum	

EDGE SPACING:

Preferred For Sequential Oper'n Edge-Edge Spacing 6.5mm

A Spacing Of 13mm Will Reduce Risk Error In Vibration

Figure 7.3:32: Keyboard Dimensions

7.3.5.4 Shape

Keys may be circular, square or rectangular with a dished top surface. They are not to have any sharp edges.

7.3.5.5 Displacement Resistance

Keys should exhibit elastic resistance, but resistance characteristics may be determined by the operational requirements of the equipment.

Displacement for Alphanumeric operation	1.3 mm Min 6.3 mm Max
Numeric and Dual function operation	0.8 mm Min 4.8 mm Max
Membrane 'tactile' keys	0.7 mm Minimum
Resistance for sequential Alphanumeric operation	0.25 N Min 1.5 N Max
Numeric input, vehicle application	2.8 N Min 6.7 N Max
Membrane 'tactile' keys	2 N Min

7.3.5.6 Direction of Motion

Touching/striking the key down should activate the key action, then the key should return to its normal position.

7.3.5.7 Other Requirements

Keys within a keyboard should exhibit uniform characteristics. Under conditions of vibration it is desirable for the key to incorporate positive tactile feedback to indicate activation, i.e. 'snap' action. For military applications the entire keyboard is to be designed with NBC decontamination requirements in mind. The advantage in the use of membrane 'tactile' keys that have 'wipe over' covers, which still permit key activation are to be considered.

7.3.5.8 Keypads (C5.22)

The keypad is used when numeric information only is to be entered into the system. It occupies a smaller area than the alphanumeric keyboard and can be used more rapidly than the QWERTY layout for numeric entry.

7.3.5.9 Location

The keypad can be mounted horizontally or vertical depending on the operational requirements. When horizontal it should be located at approximately the level of the elbow of the seated operator and directly in front of the operator. Where possible the keypad should be detachable to permit the operator to place it where it is most comfortable. When mounted vertically, provision should be made for the operator to steady the hand during operation.

7.3.5.10 Recommended Dimensions

If mounted vertically, minimum key size should be 19 mm to permit operation with the thumb whilst the remaining fingers steady the hand.

Typical Telephone Key Layout

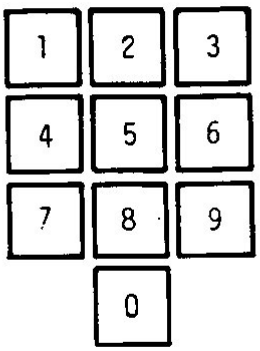

KEY SIZE, For Low Level Vibration Environment		
Bare Handed 10mm Minimum	19mm Maximum	14mm Preferred
Gloved 15mm Minimum		22mm Preferred
KEY SIZE, Vehicle Applications		
Bare Handed 10mm Minimum	25mm Maximum	
Gloved 19mm Minimum	25mm Maximum	

EDGE SPACING:

Preferred for sequential oper'n edge-edge spacing 6.5mm

A spacing of 13mm will reduce risk error in vibration

Figure 7.3:33: Keypad Dimensions.

7.3.5.11 Shape

Keys may be circular, square or rectangular with a dished top surface. They are not to have any sharp edges.

7.3.5.12 Displacement Resistance

Keys should exhibit elastic resistance, but resistance characteristics may be determined by the operational requirements of the equipment.

Displacement for Alphanumeric operation	1.3 mm Min 6.3 mm Max
Numeric and Dual function operation	0.8 mm Min 4.8 mm Max
Membrane 'tactile keys'	2 N Minimum

7.3.5.13 Direction of Motion

Touching the key down should activate the key action, then the key should return to its normal position.

7.3.5.14 Other Requirements

Keys within a keypad should exhibit uniform characteristics. Under conditions of vibration it is desirable for the key to incorporate positive tactile feedback to indicate activation, i.e. 'snap' action. Keys for 'cancelling' and 'enter' should be provided. For military applications the entire keypad should be designed with NBC decontamination requirements in mind.

7.3.5.15 Keysets (C5.23)

Keysets with each key dedicated to a specific switching function or command should be used when the number of functions is relatively small and unchanging. In data entry applications they may be used instead of keyboards to enter system commands.

7.3.5.16 Location

Dedicated keysets should be located and configured according to the task of the operator, taking into account normal operational sequences (see Part HFE3 of this Standard).

7.3.5.17 Recommended Dimensions

Dedicated keysets should conform to the recommendations for keyboards, except where a label is necessary on the keycap for identification purposes. In this case legend switches (B4.18) dimensions are appropriate.

SIZE: Layout Of Keys

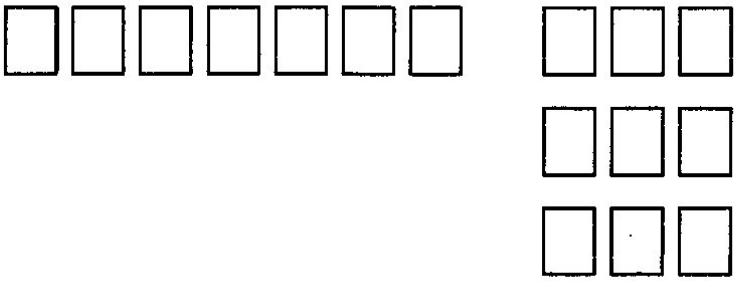

KEY SIZE, For Low Level Vibration Environment		
Bare Handed 10mm Minimum	19mm Maximum	14mm Preferred
Gloved 15mm Minimum		22mm Preferred
KEY SIZE, Vehicle Applications		
Bare handed 10mm Minimum	25mm Maximum	
Gloved 19mm Minimum	25mm Maximum	

EDGE SPACING:

Preferred For Sequential Oper'n Edge-Edge Spacing 6.5mm

A Spacing Of 13mm Will Reduce Risk Error In Vibration

Figure 7.3:34: Keyset Dimensions

7.3.5.18 Shape

Keys may be circular, square or rectangular with a dished top surface. They are not to have any sharp edges.

7.3.5.19 Displacement Resistance

Keys should exhibit elastic resistance, but resistance characteristics should be determined by the operational requirements of the equipment.

Displacement of Alphanumeric operation	1.3 mm Min 6.3 mm Max
Numeric and Dual function operation	0.8 mm Min 4.8 mm Max
Membrane 'tactile' keys	0.7 mm Minimum
Resistance for sequential Alphanumeric operation	0.25 N Min 1.5 N Max
Numeric input, vehicle application	2.8 N Min 6.7 N Max
Membrane 'tactile' keys	20 N Minimum

7.3.5.20 Direction of Motion

Touching the key down should activate the key action, then the key should return to its normal position.

7.3.5.21 Other Requirements

Keys within a keyset should exhibit uniform characteristics. Under conditions of vibration it is desirable for the key to incorporate positive tactile feedback to indicate activation, i.e. 'snap' action. For military applications the entire keyset should be designed with NBC decontamination requirements in mind.

7.3.5.22 Multi-Function Keysets (C5.24)

These offer a means of changing the operating functions of individual keys. They can be utilized when switching requirements vary substantially during different phases or modes of operation and when the total number of functions to be switched cannot be conveniently handled by dedicated keys. The risk of error in selection is higher than is the case with dedicated keys, as the same key will have different functions at different times. Consequently multi-function keys are NOT to be used for the selection of critical functions.

7.3.5.23 Location

In multi-function keys, the current function of each key is to be clearly visible and the labels are not to be close to their relevant keys. Labels which are not applicable to the selected mode should not be visible. Those switches which may not be selected in the current mode may be indicated, i.e. by extinguishing an integral light.

7.3.5.24 Recommended Dimensions

Multi-function keys are to conform to the recommendations for keyboards, except where a label is necessary for identification purposes.

SIZE: Layout Of Keys

Example of computer Multi-function keys

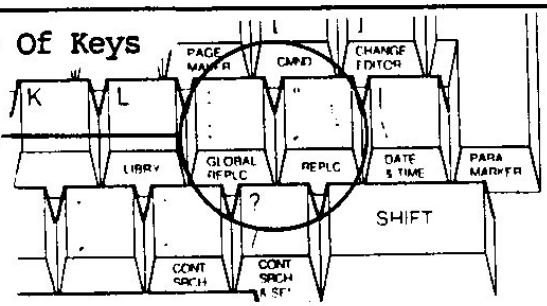

KEY SIZE, For Low Level Vibration Environment

Bare Handed 10mm Minimum	19mm Maximum	14mm Preferred
Gloved 15mm Minimum		22mm Preferred
KEY SIZE, Vehicle Applications		
Bare Handed 10mm Minimum	25mm Maximum	
Gloved 19mm Minimum	25mm Maximum	

EDGE SPACING:

Preferred For Sequential Oper'n Edge-Edge Spacing 6.5mm

A Spacing Of 13mm Will Reduce Risk Error In Vibration

Figure 7.3:35: Multi-Keyset Dimensions

7.3.5.25 Shape

Keys may be circular, square or rectangular with a dished top surface. They are not to have any sharp edges.

7.3.5.26 Displacement Resistance

Keys should exhibit elastic resistance, but resistance characteristics can be determined by the operational requirements of the equipment.

Displacement for Alphanumeric operation	1.3 mm Min 6.3 mm Max
Numeric and Dual function operation	0.8 mm Min 4.8 mm Max
Membrane 'tactile' keys	0.7 mm Minimum
Resistance for sequential Alphanumeric operation	0.25 N Min 1.5 N Max
Numeric input, vehicle application	2.8 N Min 6.7 N Max
Membrane 'tactile' keys	2 N Minimum

7.3.5.27 Direction of Motion

Touching the key down should activate the key action, then the key should return to its normal position.

7.3.5.28 Other Requirements

Keys within a keyset should exhibit uniform characteristics. Under conditions of vibration it is desirable for the key to incorporate positive tactile feedback to indicate activation, i.e. 'snap' action. For military applications the entire keyset is to be designed with NBC decontamination requirements in mind.

7.3.5.29 Voice Recognition System (C6.25)

Speech is the most natural communication medium, voice control decreases response time and reduces the incidence of operator errors. They are omni-directional in use, and operable under low ambient light conditions. Data entry by direct voice input (DVI) typically consists of a single utterance. However a critical task during high workload must not rely on DVI. Voice control systems are a potential alternative to keyboard and other manually operated input devices when hands are busy elsewhere.

7.3.5.30 Location

The proposed location should be assessed to ensure its suitability.

7.3.5.31 Recommended Dimensions

Panel space requirements are small and the equipment required would be designed to suit. Ancillary equipment can be stored elsewhere (see Parts HFE8 and M4 of this Standard).

7.3.5.32 Shape

See Parts HFE8 and M4 of this Standard for more guidance.

7.3.5.33 Displacement Resistance

Not appropriate.

7.3.5.34 Direction of Motion

Omni-directional in use.

7.3.5.35 Other Requirements

The systems are to function under the effects of interfering factors which may be imposed under the most severe conditions of use. The operator's voice characteristics will be altered by a variety of factors associated with the operational environment. The system should therefore maintain an acceptable command recognition rate despite vocal and environmental changes. Specialist advice is to be obtained on the viability of voice control for specific applications and the system is preferably to be tested for reliability under a full range of operational conditions, with decontamination requirements in mind.

7.3.6 Touch Displays (C7.26)

Pointing with the finger or a pointer is a very natural and rapid means of designation on a display. An advantage of the touch display is that there are no loose sensors or probes which may become damaged. A button or similar control needs to be operated with the other hand to command storage of the designated co-ordinates. A disadvantage is that the display is obscured during use and the surface can become soiled. Touch displays may be used for the designation of points on a Cathode-Ray Tube (CRT) or similar display when the display is within reach of the operator and line of sight is approximately perpendicular to the display surface.

7.3.6.1 Location

The screen surface should be within reach envelope of the fifth percentile operator (see part P3 of this Standard).

7.3.6.2 Recommended Dimensions

The size of the display must be adequate to meet the visual requirements of the task and to meet the required accuracy of spatial designation performance (see part HFE8 of this Standard).

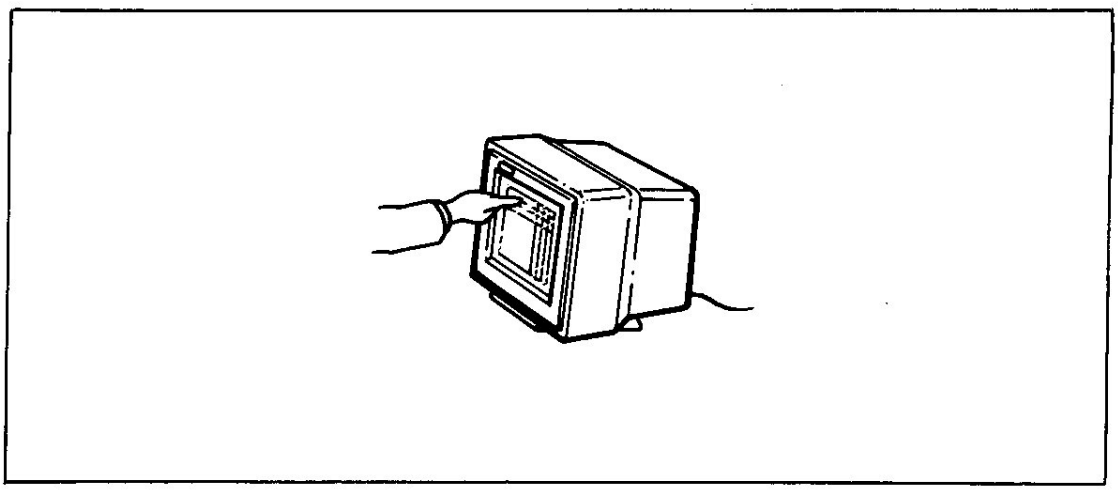

Figure 7.3:36: Touch Display

7.3.6.3 Shape

Standard CRT, similar display.

7.3.6.4 Displacement Resistance

Not appropriate.

7.3.6.5 Direction of Motion

The direction of motion of the cursor should be the same as that of the finger or pointer. It is preferable that movement of the finger or pointer across the screen surface should result in the cursor moving at the same rate and with a smooth motion.

7.3.6.6 Other Requirements

Consideration should be given to whether operation will be activated by first or last point of contact. The systems should function under the effects of interfering factors which may be imposed under the most severe conditions of use and should be tested for reliability under a full range of operational conditions.

7.3.6.7 Light Pen (C7.27)

A light pen uses a system capable of sensing the beam from a light pen touching or very close to the surface of a visual display. The disadvantages and advantages are the same as for touch displays, but the light pen is attached to the system by means of a wire, and there is a need to store the probe when not in use. However, the storage of the designated co-ordinates may be commanded, i.e. be means of a 'push tip' which may be used for the generation of freely drawn graphs.

7.3.6.8 Location

The screen surface should be within reach envelope of the fifth percentile operator (see Part P3 of this Standard).

7.3.6.9 Recommended Dimensions

The size of the display must be adequate to meet the visual requirements of the task and to meet the required accuracy of spatial designation performance (see Part HFE 8 of this Standard).

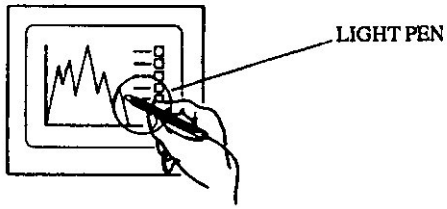

Length = 'L'	120mm Minimum	180mm Maximum
Diameter = 'D'	7mm Minimum	20mm Maximum

Figure 7.3:37: Light Pen Dimensions

7.3.6.10 Shape

Standard CRT, similar display. The light pen should take the approximate form of a conventional pen, with surface texture to permit a firm grip.

7.3.6.11 Displacement Resistance

Not appropriate.

7.3.6.12 Direction of Motion

The direction of motion of the cursor should be the same as that of the light pen. It is preferable that movement of the light pen across the screen surface should result in the cursor moving at the same rate and with a smooth motion. When used as a two-axis controller, contact with the screen surface should cause the cursor to appear at the designated co-ordinates on the display and to remain there until the pen is removed.

7.3.6.13 Other Requirements

Touch displays should not be used when long sessions of spatial application are expected which could result in the operator's arm becoming fatigued. The systems should function under the effects of interfering factors which may be imposed under the most severe conditions of use and should be tested for reliability under a full range of operational conditions. Replacement of the light pen should be designed to be a simple matter of plugging in a replacement, the lead should be long enough to remain slack in use (see Part HFE9 of this Standard).

7.3.6.14 Digitizing Tablet (C8.28)

Graphics tablets, grids and styli have similar characteristics to the light pen/visual display screen, except the operator is not required to be in contact with the screen. The tablet will require space in front of the seated operator. The stylus is attached to the system by means of a wire and there is a need to store the stylus when not in use. Digitizing tablet may be used for the generation of free-drawn graphics.

7.3.6.15 Location

The tablet should be located to maintain spatial correspondence with the display, i.e. the left and right sides of the tablet should correspond to the left and right sides of the screen and the furthermost side of the tablet to the top of the screen. The working height should be at elbow level of the seated operator.

7.3.6.16 Recommended Dimensions

The size of the tablet and the display must be adequate to meet the visual requirements of the task and to meet the required accuracy of spatial designation performance (see part HFE8 of this Standard).

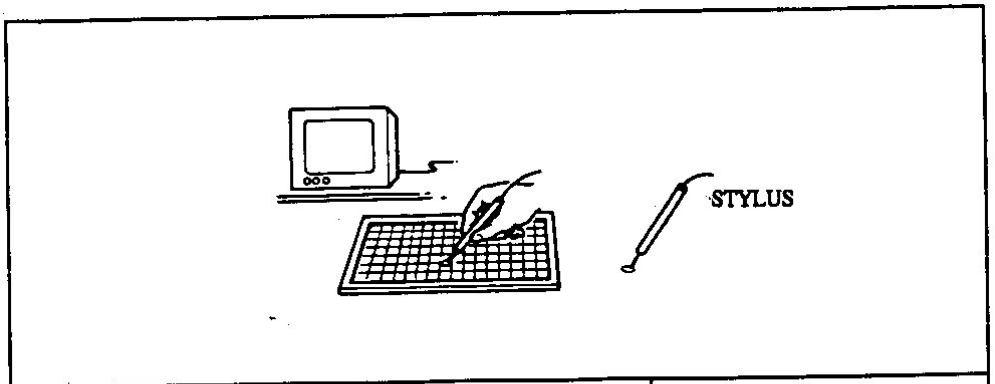

Length ='L'	120mm Minimum	180mm Maximum
Diameter ='D'	7mm Minimum	20mm Maximum

Figure 7.3:38: Stylus Dimensions

7.3.6.17 Shape

Standard CRT, similar display. The stylus should take the approximate form of a conventional pen, with surface texture to permit a firm grip.

7.3.6.18 Displacement Resistance

Not appropriate.

7.3.6.19 Direction of Motion

The direction of motion of the cursor should be the same as that of the stylus. It is preferable that movement of the stylus across the surface grid should result in the cursor moving at the same rate and with a smooth motion. When used as a two axis controller, contact with the tablet surface should cause the cursor to appear at the designated co-ordinates on the display and to remain there until the pen is removed.

7.3.6.20 Other Requirements

Replacement of the stylus should be designed to be a simple matter of plugging in a replacement, the lead should be long enough to remain slack in use (see Part HFE9 of this Standard). The systems should function under the effects of interfering factors which may be imposed under the most severe conditions of use and should be tested for reliability under a full range of operational conditions.

7.3.6.21 Mouse (C8.29)

Free moving 'X-Y' controller. The mouse may be operated by moving it in contact with any flat surface. There is also provision for the incorporation of one or more command keys on the mouse itself, thus permitting one hand operation. The operator is not required to be in contact with the screen. The mouse will require space in front of the seated operator. The mouse may be attached to the system by means of a wire and there is a need to store the mouse when not in use. This system requires less space than the graphics tablet.

7.3.6.22 Location

A clear flat horizontal surface should be available upon which the mouse may be used. The working height should be at elbow level of the seated operator.

7.3.6.23 Recommended Dimensions

The size of the display must be adequate to meet the visual requirements of the task and to meet the required accuracy of spatial designation performance (see Part HFE8 of this Standard). The mouse controller should fall within the following:

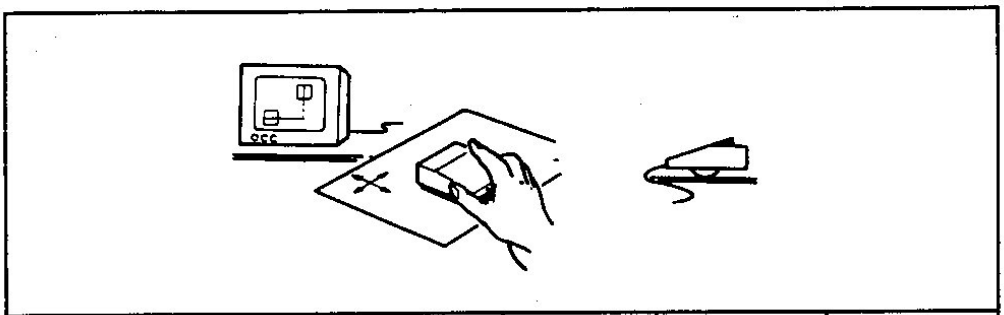

Width(Thumb/Finger Grasp)	Length	Depth	
40mm	70mm	25mm	Minimum
70mm	120mm	40mm	Maximum

Figure 7.3:39: Mouse Dimensions

7.3.6.24 Shape

Standard CRT, similar display. The mouse to fit the operation grip requirements, with surface texture to permit a grip.

7.3.6.25 Displacement Resistance

Not appropriate.

7.3.6.26 Direction of Motion

A movement of the mouse across the operating surface should result in a smooth corresponding movement of the display cursor. The system should be designed such that when held in its normal operating position the direction of motion of the mouse is reflected in the motion of the cursor. The cursor should remain at the last designated co-ordinates on the display and to remain there, when the mouse is lifted and removed.

7.3.6.27 Other Requirements

The control buttons mounted on the mouse should be located to permit operation of the mouse with either hand. Replacement of the mouse should be designed to be a simple matter of plugging in a replacement, the lead should be long enough to remain slack in use (see part HFE9 of this Standard). The systems should function under the effects of interfering factors which may be imposed under the most severe conditions of use and should be tested for reliability under a full range of operational conditions.

7.3.6.28 Roller Ball/Tracker Ball (C8.30)

'Track ball' and 'ball tracker' are different names for the same thing. The rolling ball has particular advantages when the cursor must be moved across large distances on the display, followed by fine adjustment, rapid movement can be achieved by spinning the ball. It is well suited to application where there may be cumulative travel in a given direction. The rolling ball is unsuitable for the tracking of rapidly moving targets, a joystick is more appropriate in this application. It is less prone to accidental damage than spatial designation devices incorporating stylus, light pen or mouse.

7.3.6.29 Location

The ball should be set into a horizontal panel or desk top at around elbow level of the seated operator. It should be possible to rest the third and fourth fingers against the horizontal surface to steady the hand for fine adjustments. The distance from the ball to the front edge of the panel must be adequate to support the wrist and forearm if the ball is to be used for long periods. This is especially important if the chair provided does not have armrests.

7.3.6.30 Recommended Dimension

Small diameters within the range shown should only be used for low precision control when panel space is limited.

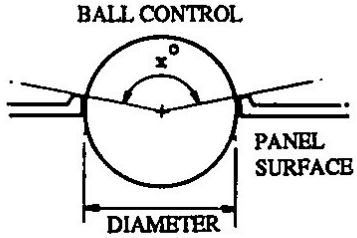

	Minimum	Maximum	Preferred
Diameter	50mm	150mm	100mm
Surface exposure 'X°'	100°	140°	120°

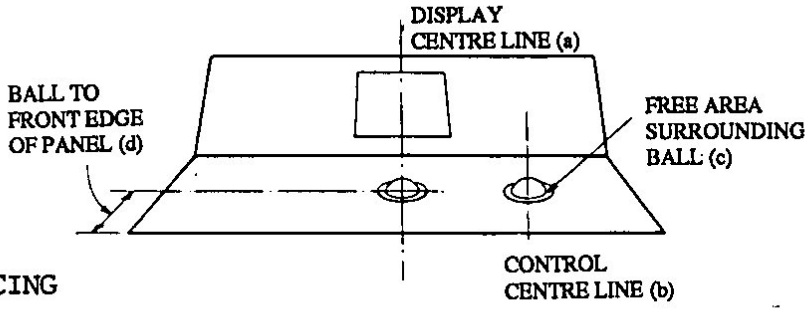

SPACING

Laterial Displacement Of Control From Display 'a'-'b'	Free Area Round Ball 'c'	Ball To Front Panel 'd'	
nil	50mm	120mm	Minimum
320mm	–	250mm	Maximum

Figure 7.3:40: Rolling Ball Dimensions

7.3.6.31 Shape

Standard CRT or similar display. The ball is sphere shaped. The work surface should fit the operational requirements (see Part HFE3 of this Standard).

7.3.6.32 Displacement Resistance

The ball should exhibit low friction and relatively high inertia to permit it to be spun for rapid and large cursor movements. Resistance for precision ball adjustments should be 1.0 N Min 0.3 N preferred. In environments which are subject to vibration/acceleration the resistance should be 1.7 N Min.

7.3.6.33 Direction of Motion

The ball should be rotatable in any direction. A movement of the ball should result in a smooth corresponding movement of the display cursor. A movement in one direction should correspond to the same movement of the cursor.

7.3.6.34 Other Requirements

The ball should be rotatable in any direction without backlash or cross coupling. Use of a roughened work surface will improve grip. If the control is to be used by operators wearing gloves the 'lip' of the panel surface should be in close correspondence with the ball surface to prevent the glove material being caught in the gap during operation.

7.4 Definitions

The definition of control terms used in the Part of the Defence Standard are listed below.

Alphanumeric characters. Numerals and letters, e.g. appearing on a keyboard or display.

Acquisition. The first phase of a continuous control or tracking task during which the initial error is reduced.

Break-out force. The threshold force that must be applied to the controller of a continuous variable, e.g. an isotonic joystick, before it is displaced from its central position.

Contrast. Contrast has important implications for visual performance see Parts HFE4 and HFE8 of this Defence Standard.

Control coding. A system of principles by means of which controls may be rendered easily identifiable and distinguishable, e.g. by locating related controls together, by labelling, by colouring related controls similarly, by the use of distinctive control shapes, or by the use of distinctive control sizes.

Control law. A mathematical function describing the relationship between the input demand to, for example, a joystick and the output from it.

Cue. An indication of a change in the state of a system which will affect operator's subsequent actions.

Deadspace. A portion of the movement of the controller of a continuous variable, e.g. an isotonic joystick, which does not result in a change in the output of the controller.

Designation. An action on the part of an operator indicating that acquisition is complete, or that a cursor has been moved to the desired point on a display.

Elastic resistance. A resistance to movement which is proportional to control displacement.

Feedback. (In the context of man-machine interaction) Information from equipment indicating the consequences of the operator's actions. Thus the 'click' of a control as it snaps into a discrete position indicates to the operator that a setting has been reached.

Inertial resistance. A resistance to movement which is caused by the mass of the controls.

Isometric. A type of control operating such that its output signal is proportional to the force applied to it, e.g. force sensitive joystick controls.

Isotonic. A control type operating such that its output signal is proportional to the displacement applied to it.

Kinaesthesia. The sense of body orientation and limb position.

Percentile. (As applied to the description of human characteristics such as size and weight.) The value of a measured characteristic below which lies a given percentage of a population. Thus the fiftieth percentile for height is that height below which lies 50 per cent of the population and the ninety-fifth percentile for weight is that weight below which lies 95 per cent of the population.

Population stereotype. An expectation exhibited by a population of users of the manner of operation of a control, which normally develops as a result of learning and experience.

Static friction. The force opposing the initial movement of a controller which reduces once the movement has started ('inertia' in control movement).

Tactile/tactual. Sensations arising as a result of touch. Tactile information can be disrupted by the wearing of protective gloves.

Tracking. The continuous control of a system by an operator in response to the behaviour of a target motion of which is outside his control. An example of a tracking task is the following of a moving target by the use of a weapon sighting system.

Viscous resistance. A resistance to movement which is proportional to the velocity of the control movement.

7.5 References

The documents referred to in this Part of the Standard are listed below, with additional publications which provide greater coverage on particular aspects of the subject.

[232] BS EN ISO 13406-1:1999. Ergonomic requirements for work with visual displays based on flat panels – Introduction

[233] BS EN 894-1:1997. Safety of machinery. Ergonomics requirements for the design of displays and control actuators

[234] BS EN ISO 8468:1995. Ships bridge layout and associated equipment – requirements and guidelines

[235] BS EN ISO 9241-9:1998. Ergonomic requirements for office work with visual display terminals. Requirements for non-keyboard input devices

[236] BS EN 60073:2002. Basic and safety principles for man-machine interface, marking and identification. Coding principles for indicators and actuators

[237] ISO/IEC 10741-1:1995. Information technology – User system interfaces – Dialogue interaction Part 1 Cursor control for text editing

[238] ISO/IEC 11581-1:2000. Information technology – User system interfaces and symbols – Icon symbols and functions Part 1: Icons – General

[239] ISO/IEC 11581-2:2000. Information technology – User system interfaces and symbols – Icon symbols and functions Part 2: Object icons

[240] ISO/IEC 11581-3:2000. Information technology – User system interfaces and symbols – Icon symbols and functions Part 3: Pointer icons

[241] ISO/IEC 11581-6:1999. Information technology – User system interfaces and symbols – Icon symbols and functions Part 6: Action icons

[242] BS 7517:1995, IEC 61227:1993. Nuclear power plants. Control rooms. Operator controls

[243] Def Stan 00-970 - Design and Airworthiness Requirements for Service Aircraft – Aeroplanes

[244] US Department of Defence (1999). Military Standard: Human Engineering design criteria for military systems, equipment and facilities. MIL-STD 1472F.

[245] MIL-HDKB-759C Human Factors Engineering.

[246] Def Stan 00-25 Part 14: 2000. Human Factors for Designers of Equipment: Military Land Vehicle Design

[247] ASTM F1166-95a: 2000. Standard practice for Human Engineering design for marine systems, equipment and facilities

[248] STANAG 3705 AI. Human Engineering design criteria for aircrew station controls and displays

[249] STGP 11. STG 2002 ISSUE 3. HFI Technical Guide

[250] NASA-STD-3000: 1995. Man-Systems Integration Standards Volumes 1 and 2

[251] Pheasant, S. (1991) Ergonomics, Work and Health. Macmillan Publishers

[252] Sanders, M.S. and McCormick F.J. (1992) Human Factors in Engineering and Design McGraw-Hill Book Company. 7th Edition.

[253] Salvendy, G. (1997) Ed. Handbook of Human Factors and Ergonomics. 2nd Ed. Wiley-Interscience Publishers

[254] Van Cott, H.P. and Kinkade, R.G. Human Engineering Guide to Equipment Design (USA) American Institute for Research, Washington DC, Library of Congress, Card No 72-600054

[255] Wickens, C.D. (1992) Engineering Psychology and Human Performance. 2nd Ed. Harper Collins Publishers

[256] Woodson, W.E. Tillman, B. Tillman, P. (1992) Human Factors Design Handbook. 2nd Ed. McGraw-Hill Publishers

8 Labelling [HFE7]

This technical area is concerned with the design of information concerned with naming within displays and workplaces. Labelling refers to text labels, abbreviations and graphical symbols and signs.

In particular, this area covers labelling in a variety of settings to focus the user's attention on important information, such as warning symbols.

There is considerable overlap with other technical areas, especially within the human factors engineering domain. Specifically, this Section overlaps with the following:

a. Human Computer Interface/Interaction [HFE5]
b. Information Displays [HFE8]

This Section was created as an overview of the topic area in August 2003 and is an interim version.

8.1 Technical Guidance

Labelling is a standard means of identifying controls and provides the minimum requirement to identify controls. Labels support learning and are especially beneficial to novice or intermediate users. Expert users tend to ignore labelling.

Labels should generally be placed above a control so the hand doesn't cover them and should be visible before the hand reaches for a control. The labelling font size should be compatible with the viewing distance which will vary according to the location and status of the display it represents. Woodson et al, 1992 provide guidance to enhance label intelligibility.

Word labels used on some controls increase the utility and efficiency of control identification. Where word labels are used on the control itself, the following should apply:

a. The control must not rotate as the label will become difficult to read.

b. If the control surface is too small for the label, the label should be placed adjacent to the control.

Where symbols are used, the following should apply:

c. Symbols must be comprehensible.

d. If there is doubt people will recognise a symbol it should be supplemented with a label.

e. The control must not rotate as the symbol may appear upside down.

f. Symbols should be within a border to separate from other display items.

g. Enough detail should be provided to support recognition but too much detail tends to make symbols look similar.

h. There is a need to consider what detail symbols might lose when viewed from a distance.

8.2 References

[257] Sanders, M.S. and McCormick, E.J. (1992) Human Factors in Engineering and Design

[258] McGraw-Hill Publishers

[259] Woodson, W.E. Tillman, B. and Tillman, P. (1992). Human Factors Design Handbook 2 ed. McGraw-Hill Publishers

[260] BS EN ISO 9241-1:1992. Ergonomic requirements for office work with visual display terminals. General introduction

[261] BS EN ISO 9241-2:1992. Ergonomic requirements for office work with visual display terminals. Guidance on task requirements

[262] BS EN ISO 9241-3:1992. Ergonomic requirements for office work with visual display terminals. Visual display requirements

[263] BS EN ISO 9241-4:1998. Ergonomic requirements for office work with visual display terminals. Keyboard requirements

[264] BS EN ISO 9241-6:2000. Ergonomic requirements for office work with visual display terminals. Environmental requirements

[265] BS EN ISO 9241-7:1998. Ergonomic requirements for office work with visual display terminals. Display requirements with reflections

[266] BS EN ISO 9241-8:1998. Ergonomic requirements for office work with visual display terminals. Requirements for displayed colours

[267] BS EN ISO 9241-9:1998. Ergonomic requirements for office work with visual display terminals. Requirements for non-keyboard input devices

[268] BS EN ISO 9241-11:1998. Ergonomic requirements for office work with visual display terminals. Guidance on usability

[269] BS EN ISO 9241-12:1999. Ergonomic requirements for office work with visual display terminals. Presentation of information

[270] BS EN ISO 9241-13:1999. Ergonomic requirements for office work with visual display terminals. User Guidance

[271] BS EN ISO 9241-14:2000. Ergonomic requirements for office work with visual display terminals. Menu dialogues

[272] BS EN ISO 9241-15:1998. Ergonomic requirements for office work with visual display terminals. Command dialogues

[273] BS EN ISO 9241-16:1999. Ergonomic requirements for office work with visual display terminals. Direct manipulation dialogues

[274] BS EN ISO 9241-17:1998. Ergonomic requirements for office work with visual display terminals. Form filling dialogues

[275] BS EN ISO 13406-1:1999. Ergonomic requirements for work with visual displays based on flat panels – Introduction

[276] BS EN ISO 13406-2:2002. Ergonomic requirements for work with visual displays based on flat panels. Ergonomic requirements for flat panel displays

[277] BS EN ISO 13731:2002. Ergonomics of the thermal environment – vocabulary and symbols

[278] BS EN ISO 8468:1995. Ships bridge layout and associated equipment – requirements and guidelines

[279] BS EN 60073:2002. Basic and safety principles for man-machine interface, marking and identification. Coding principles for indicators and actuators

[280] 99/561489 DC. BS ISO 3864-1. Safety colours and safety signs. Part 1. Safety signs in workplaces and public areas. Design principles (ISO 3864-1)

[281] BS 7324:1990, ISO 7000:1989. Guide to graphical symbols for use on equipment

[282] ISO 11428:1996. Ergonomics – visual danger signals – general requirements, design and testing

[283] BS 5378-2:1980. Safety signs and colours. Specification for colorimetric and photometric properties of materials

[284] BS 7517:1995, IEC 61227:1993. Nuclear power plants. Control rooms. Operator controls

[285] BS 5817-8:1990, IEC 60574-16:1987. Specification for audio-visual, video and television equipment and systems. Symbols and identification

[286] ISO/IEC 11581-1:2000. Information technology – User system interfaces and symbols – Icon symbols and functions Part 1: Icons – General

[287] ISO/IEC 11581-2:2000. Information technology – User system interfaces and symbols – Icon symbols and functions Part 2: Object icons

[288] ISO/IEC 11581-3:2000. Information technology – User system interfaces and symbols – Icon symbols and functions Part 3: Pointer icons

[289] ISO/IEC 11581-6:1999. Information technology – User system interfaces and symbols – Icon symbols and functions Part 6: Action icons

[290] Def Stan 02-599: 2001. Policy requirements and design guidance for alarms and warning systems

[291] Def Stan 02-707 Part 1: 2000. Symbols and abbreviations. Guide to the general use of symbols

[292] Def Stan 02-707 Part 2: 2000. Symbols and abbreviations. Guide to abbreviations and system code letters

[293] Def Stan 02-784: 2000. Requirements for safety signs and colours

[294] Def Stan 08-111: 2000. Requirements for the design of a user interface to Electronic Damage Control Information Displays

[295] Mil-Std-1472F: 1999. US DoD Design Criteria Standard – Human Engineering

[296] Mil-Std-1477C: 1996. Interface Standards: Symbols for Army Systems Displays

[297] Mil-Std-1787C: 2001. Aircraft Display Symbology

[298] Mil-Std-2525B: 1999. Common Warfighting Symbology

[299] MIL-H-46855B Human Engineering Guidelines for Military Systems, Equipment and Facilities.

[300] ANEP 27 (NATO MAS), Edition 1. Human Factors guidelines for the design of MMIs in Operational Rooms

[301] NATO APP 6 (A): 2002. Military symbols for land-based systems

[302] ASTM F1166-95a: 2000. Standard practice for Human Engineering design for marine systems, equipment and facilities

[303] NASA-STD-3000: 1995. Man-Systems Integration Standards Volumes 1 and 2

[304] US Department of Defence (1999). Military Standard: Human Engineering design criteria for military systems, equipment and facilities. MIL-STD 1472F.

[305] STANAG 3705 Principles of Presentation of Information in Aircrew Stations Standardization Agreement. Promulgated 1992

9 Information Displays [HFE8]

This technical area is concerned with guidance concerning the design of displays of all types, including multi-media systems. The main areas covered are visual and auditory displays.

There is considerable overlap with other technical areas, especially within the human factors engineering domain. Specifically, this Section overlaps with the following:

a. Verbal Communication [M4]
b. Sensory Characteristics [P10]
c. Psychological Issues [P11]
d. Human Computer Interaction/Interface [HFE5]
e. Information Displays [HFE8]

This Section was last updated in December 1996 and edited in August 2003.

9.1 Technical Guidance

9.1.1 Visual Information Displays

The aim of this Part of the Standard is to help designers produce effective visual displays by providing guidance on characteristics of the human visual system and physical design that influence perceptual performance.

The design principles are intended to be sufficiently generic to be applicable to most display types, from hand-produced signs to three-dimensional interfaces. The general guidance is supported by technology-specific recommendations, where relevant, certain clauses may not be applicable or relevant for particular display media or operational tasks. Consequently, the designer should always adhere to the general principles and ethos of the Standard ahead of the specific detail. For these reasons it will be necessary for the designer to consult other sources of information for guidance on specific technologies and topics, such as Head-Up Display optics or strategic symbols used in active radar. The references in this Section and those in Part 25 provide further information.

The information display should help direct and focus attention appropriately to enable users to effectively interact with a system. The information display should exploit the way the human visual system works to help detect a required item or uncover items of interest. Strategies exist to focus attention on what needs to be looked at or listened to at any given stage during task performance.

The way information and tasks are organised, structured and designed on the interface directly impacts the perception of system effectiveness. It is essential that the way tasks are presented enables task processes to follow in a logical order from the user perspective. Supporting navigation tasks by structuring information appropriately helps to direct the user and is essential to avoid frustration and increased error rates. From this, the amount of information on a display should be not too much or too little as this leads to increased scanning of a complex display or requires moving through numerous display formats to locate required information.

Information should be ordered and grouped in a meaningful way by exploiting laws of grouping. Techniques to present information that supports perception, attention, grouping and structuring are as follows:

a. Spatial and temporal cues

b. Size

c. Colour coding

d. Alerting techniques, e.g. flashing, inverse video, auditory warnings

e. Boundary lines

f. Window partitioning

Whatever technique is used, the following should also apply:

g. Important information to be attended to as a priority should be displayed in a prominent position.

h. Less important but significant information should be located at prominent and predictable display locations.

i. Information that is not needed often should not be displayed but be made available on request.

When scanning, searches tend to start in the upper left corner of a display reflecting how people read, also searching tends to be concentrated towards the centre of the visual field and avoids attending to the edge of the display.

The format and presentation of information should be considered in relation to the way people process information and the detail of information required by the user.

The principles described in this Part of the Standard have been designed to be applicable to the vast majority of displays used for military purposes, irrespective of display technology, as far as is realistic given the rapid advance of display technology. Consequently, the emphasis of this Part of the Standard is on providing guidance rather than limited prescriptive specification. Nonetheless, principles expressed using the term ‘should’ have the strongest emphasis and the designer ought to be clear in his/her justification for departures from such recommendations.

9.1.1.1 Task Requirements for Displays

The purpose of a display is to support a human operator in pursuance of an operational or other objective by conveying useful information. The degree to which the information helps the operator is influenced by its availability, timeliness, precision, comprehensiveness, validity, reliability and the degree to which it can be understood. These characteristics are related to the tasks which the operator must perform to complete the objective.

9.1.1.2 Understanding the tasks the display must support

Therefore the first steps for the designer should address the following:

a. What is the overall objective?
b. What information is required to support the objective?
c. What part of the overall information requirements must the display provide?
d. What is important about the information?
e. Is the information used directly or with other information?
f. Are further mental operations required for the information to be meaningful?
g. What levels of detail and/or accuracy are required?
h. How significantly and how often can the information change?
i. Does the information need to be continuously monitored?
j. Is the output of the display directly influenced by input from the operator?
k. Under what environmental conditions does the display need to be viewed?
l. What else does the operator have to do while viewing the information?
m. What are the characteristics of the viewers?

These questions are essentially questions about the context of use. The context will include the physical, psychological and psychosocial environments in which the display is used and the following factors will need to be taken into account:

n. Operational objective;
o. Legal requirements, design standards and HFI considerations;
p. Level of operational security required;
q. Visual conditions;

Levels of:

r. Illumination and luminance;
s. Vibration;
t. Noise;
u. Heat:
v. Space restrictions;
w. Likely cleanliness and;
x. Operator's mental workload and stress when using the display.

These factors are described further in Part HFE8.

9.1.1.3 Modelling User Tasks

Modelling user tasks to yield design specifications requires a certain amount of trial and error, but structured analysis can help the designer understand specific requirements of the display.

Most modelling methods begin by decomposing the overall objective into sub-goals and identifying the component tasks required to achieve the sub-goals. Further general information is given in this part.

9.1.1.4 Defining the tasks

A description of structured task analysis methods is given in Kirwan & Ainsworth (1992). An example of a Hierarchical Task Analysis (HTA) is given in Figure 9.1:1 for a hypothetical command-to-line of sight (CLOS) missile system. HTA breaks-down tasks hierarchically into their sub-components and uses a plan to provide the logical rules that govern the execution of each task.

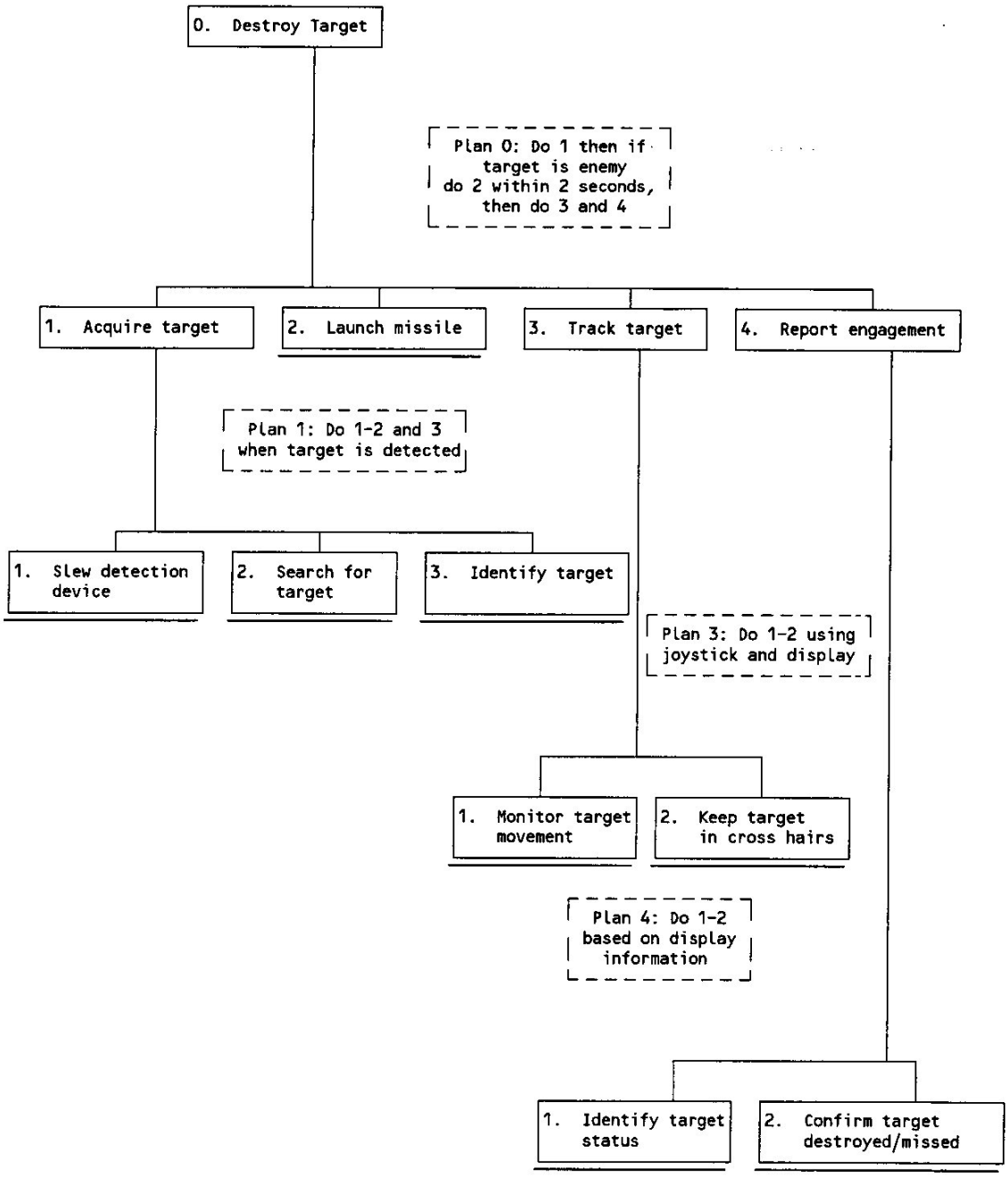

Figure 9.1:1: Task Description of a Hypothetical Missile System, Using HTA

In the example in Figure 9.1:1 the designer can use the breakdown of individual tasks to identify design requirements of the display. For example, analysis of the acquisition sub-tasks raises issues concerning the rate of presentation of information (during slewing), the size and contrast of the target image (for search purposes) and the distinctiveness of the image (for recognition and identification). The designer can use this information, coupled with the operational requirements of the system to help decide upon the display characteristics, e.g. whether to use thermal/IR images or a representational or virtual display with arbitrary symbols.

As illustrated in the Plan for task 0, the system or operational requirements frequently impose time constraints upon the operator - in this example the missile must be launched within 2

seconds of acquiring the target. The designer should decide whether indication of the time to fire should be provided in the visual display or whether another medium (e.g. auditory cue) should be used to help the operator simultaneously maintain tracking performance. Similarly, how will the display show if the target has been destroyed or lost?

The operator's performance of tracking the target (task 3 in the example) will depend on the relative size and contrast of the cross hairs and target image, but will be most influenced by the joystick control law. Hence the display designer must take into consideration the control-display dynamics, for example, does a forward demand on the joystick cause the display to pan up (and the image down) or the image up (and the display down)? The task description should be used in conjunction with the statement of the context of use to model the operator/display interaction. Note the directional relationship between input demand and system response should meet expectations of the operator (see Def Stan 00-25 Part HFE6).

9.1.1.5 Modelling

By considering the task description in the context of use, a theoretical model can be constructed of the interaction between system and operator. The most appropriate method of depicting the model varies but commonly takes on the form of an annotated task description or a flow diagram. Computerised models are also used. The display designer should use the model to identify and resolve the combination of the task and contextual requirements of the display. For example, the task in the example in Figure 9.1:1 may have to be conducted under high amplitude, low frequency vibration (e.g. whilst moving on a land vehicle over rough ground), and against a high background luminance (e.g. sunny sky). This may eliminate the use of a helmet-mounted display for gross acquisition of the target in favour of a semi-automated acquisition system. The model should take account of the dynamics of the interaction between operator and equipment, in particular the relationship between the operator's control input to the system and the way the resulting output is displayed.
Figure 9.1:2 illustrates this 'control loop'; absent from the illustration are contextual influence upon both operator (e.g. training, orders, expectation) and system (e.g. external events, environmental conditions).

NOTE: The operator's perception of the situation affects his/her control response. The system performs as controlled and the result of the control is displayed. The presentation of the results (via the display) is critical in maintaining accurate situational awareness.

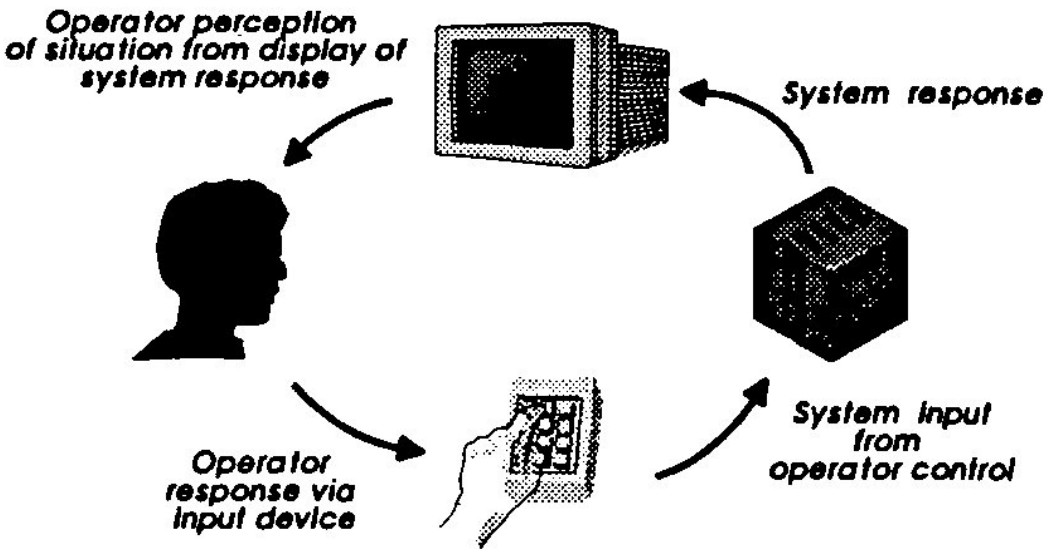

Figure 9.1:2: Control Loop Between Operator and Display

9.1.1.6 Design Assessment

The design process should include iterative formal assessment of the display using performance trials and user evaluations. Prototypes, simulations and mock-ups of various constructions may be appropriate depending on the aspect of design under review. For example, if the meaningfulness of symbols is being tested, then paper display mock-ups may suffice, whereas if the clarity of the symbols is of interest, a working prototype, viewed under realistic conditions may be required. Similarly, some trials may not require representative operators (e.g. trials of absolute visual performance), though in general, the more the trial conditions and subjects match the real conditions and target operators, the more confidence there can be in the results (and hence in the resultant design decisions).

9.1.1.7 Analysing the display requirements: design checklist

By working through the task description, Target Audience Description (TAD) and task model, the designer should be able to devise a statement of desired characteristics for the display. Before assigning appropriate display media and designing the display, however, it is useful to verify the statement using the following check:

Can	*this*	person,
with	*these*	characteristics,
and	*this*	training,
carry out	*these*	tasks,
to	*this*	specification,
under	*these*	conditions,
with	*this*	display?

9.1.1.8 Perception of Information from Displays

The effectiveness of a display can be expressed as the completeness and accuracy with which the viewer can perceive the displayed information in a given time. Clearly, effectiveness relies on meeting the necessary physical requirements to be readable.

Equally important however, is the requirement that, having read the display, the information is correctly understood. In this respect the effectiveness depends on the degree to which the design of the information in the displays and the display integration and grouping meets the perceptual capabilities of the operators. This section gives guidance on general perceptual characteristics of displays.

9.1.1.9 Quantitative Displays

Quantitative displays provide information about the value, i.e. the quantity, of a variable along a dimension. The variable is either static (e.g. speed limit) or dynamic (e.g. altitude). Three types of mechanical dynamic quantitative displays are shown in Figure 9.1:3 and their advantages and disadvantages are described below.

9.1.1.10 Counters

Counters are best for tasks requiring accurate perception of precise numerical values (e.g. when setting a bearing or recording a distance).

The number of digits should be kept to a minimum. (Compared with designs of up to 3 digits, 4-6 digit displays take about 50% longer to read accurately and displays with more than 7 digits take 100% longer.)

Where including a decimal point is unavoidable, a clear distinction should be made between the digits separated by the point, with the use of a code (e.g. size or colour) or preferably by the counter drums.

Counters become difficult to read when moving quickly (where each numeral is presented for less than about 0.75 sec), especially for rate and direction of change.

For operators to read the information accurately, continuously rotating counter units need to be displayed for about 10% longer than those that move in discrete jumps.

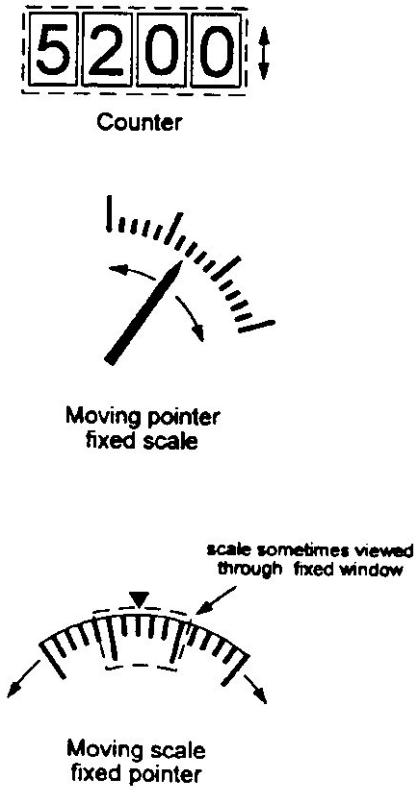

Figure 9.1:3: Types of Mechanical Dynamic Quantitative Display

9.1.1.11 Moving pointer

Operators perform best using fixed scale moving pointer displays in tasks where the direction or rate of change information is important, or where there is slight oscillation around a value.

Moving pointer displays are most limited in the absolute number of units that can be presented without compromising accurate quick reading. Performance is best with between about 20-100 units, more than 100 takes twice as long and more than 600 can take nearly five times as long to read accurately (depending on the degree of change etc).

9.1.1.12 Moving scale

In general, larger scales (diameter above about 215 mins of arc) are read slightly faster but less accurately than smaller scales. Where it is necessary to display a very large range of values, requiring a large display scale, fixed pointer moving scale displays have the advantage that the reading point is constant. Such displays typically present information in a window to minimise the amount of surface space they occupy on the display panel.

9.1.1.13 Numerical progression and scale interval

a. Operators perform best where the conventional progression 0, 1, 2, 3, ... etc is followed.

b. Where space is limited or the designer needs to declutter a display, some numbers can be eliminated using the convention, 1, 2, 5, 10, 20, 50, ... etc.

c. Care should be taken using logarithmic scales since they are notoriously difficult to read.

d. Progression should, where possible, match the orientation of any related control, bearing in mind that values increasing left-to-right or clockwise are read accurately about twice as quickly as the reverse.

e. Part circular scales are read quicker than straight horizontal scales, which are read quicker than vertical scales.

f. The larger the scale interval (within a given physical size), the fewer errors and the quicker the scale is read.

9.1.1.14 Start and end points on circular and part circular scales

It is often appropriate in assigning the start and end points of scales (or controls, see Def Stan 00-25 (Part HFE6)) to exploit the 12 positions of a conventional clock face, since all operators will be familiar with the relative spacing and numerical values associated with clocks. For example, a circular display presenting the values 0, 1, 2, 3 and 4 in their relative positions on a clock face, i.e. at 30° intervals with 0 at the top, will be read quicker than one in which they are arbitrarily arranged or equi-spaced.

In general, where values do not conveniently correspond to those on a clock face, the minimum value should be at the 7:30, 8, 9 or 12 o'clock position and the maximum value should be at the 3, 4, 4:30 or 5 o'clock position.

9.1.1.15 Scale markers

Recommended sizes and proportions for scale markers are given in Table 9.1:1 for the dimensions given in Figure 9.1:3. The recommended widths of all marks may be reduced to 2 mins of arc in good viewing conditions or where accuracy is not critical.

	Size min arc	**Approx size for viewing distance mm**		
		700	**900**	**1500**
A Major mark width	4.3	0.88	1.13	1.88
B Minor mark width	3.1	0.64	0.80	1.34
C Intermediate mark width	3.7	0.76	.097	1.60
D Major mark height	27.1	5.55	7.10	11.81
E Minor mark height	12.2	2.50	3.21	5.36
F Intermediate mark height	19.6	4.00	5.14	8.57
G Minor mark gap	8.6	1.75	2.25	3.75
H Major mark gap	85.9	17.5	22.50	37.50

Table 9.1:1: Recommended Sizes of Scale Markers

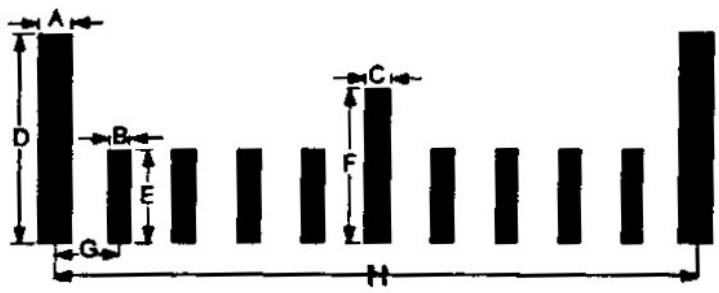

Figure 9.1:4: Recommended Sizes of Scale Markers

9.1.1.16 Pointer design

a. The pointer should have a high contrast to the display background.

b. The colour of the pointer should extend from the centre of the display dial to its radial end only in the direction of the pointer tip.

c. Numerals and labels accompanying scales should be positioned outside the scale markers to avoid being obscured by the pointer.

d. The inside edges of major and minor scale markers should be aligned on the circumference swept by the pointer tip.

e. The width of the pointer tip should be the same as the width of the narrowest scale mark. To enhance the readability for check-reading, it may be necessary to increase the width of the main body of the pointer, in which case the angle from the pointer tip should be about 20°.

f. The tip should meet the scale markers but not overlap them.

9.1.1.17 Quantitative display design checklist

a. Moving pointer, fixed scale displays are preferred, especially if there is continuous small variation, or rapid change.

b. Use counters or windowed moving scale fixed pointer display where precise numerical values must be read quickly.

c. Counters should move in jumps.

d. Use conventional progression (e.g. 0, 1, 2, 3, ...).

e. Scale progression should increase in the same direction as the input associated controls.

f. Indicate which units (preferably SI units) the display shows. For UK land vehicle applications, speedometers have dual scales in Km/hr and mph as road distances are indicated in miles.

g. Use the clock face convention where appropriate for positioning of start and end points and for positioning values.

h. Place numbers outside scale markers.

i. Pointers should meet but not overlap scale markers and the tips should be the same width as the narrowest marker.

9.1.1.18 Qualitative Displays

Where specific or approximate values have special significance to the operator's task, qualitative displays should be considered. The information in qualitative displays usually has a basic quantitative element but the operator is often more concerned with the thresholds or ranges of values that are significant to the task. A quantitative temperature display, for example, presents a numerical value for the temperature from which the operator has to decide what the value means in relation to the task.

The operator may not need to know the precise temperature, but may instead be concerned with whether the temperature is too hot or too cold for operational purposes. A qualitative display, however, could be used to present the information in such a way that it is immediately relevant, without requiring the operator to make an extra decision (e.g. by indicating that the temperature is 'too hot' or 'too cold'). Thus, qualitative information in displays can be useful to:

g. enhance quantitative information;
h. provide indication of the status of a particular variable (including alarms and warnings);
i. provide information concerning relationships between entities.

9.1.1.19 Using qualitative information to enhance quantitative displays

Many quantitative displays are used for quantitative and qualitative purposes, for example, a pointer moving quickly, anti-clockwise on an altimeter indicates a rapid descent (i.e. it conveys trend information concerning the direction and rate of change as well as numerical values for height of the aircraft).

There are many situations where qualitative information can be added to quantitative displays to enhance the significance of particular values or ranges of values. Some examples are given in Figure 9.1:5 (a) and (b). Redundant coding is particularly useful to help the operator identify the status of information (e.g. shaded areas on a pressure level gauge may be used to indicate the boundaries of a safe operational level).

Similarly, if the predominant use of the display is for check reading, coding or labels can be used to highlight the 'normal' value. Typically in check reading the actual values are not required because it is the condition or status of the information that is important. In these circumstances the designer should consider whether the operator needs numerical values at all, or whether the display would be easier to read as depicted in Figure 9.1:4 (c), with merely a pointer and zones indicating the alternative conditions or states.

An advantage of pointer displays over discrete status indicators is the ability to detect the rate and direction of change within each state, e.g. the pointer in Figure 9.1:4 (c) is within the acceptable 'normal' range but may be moving towards the 'too low' zone.

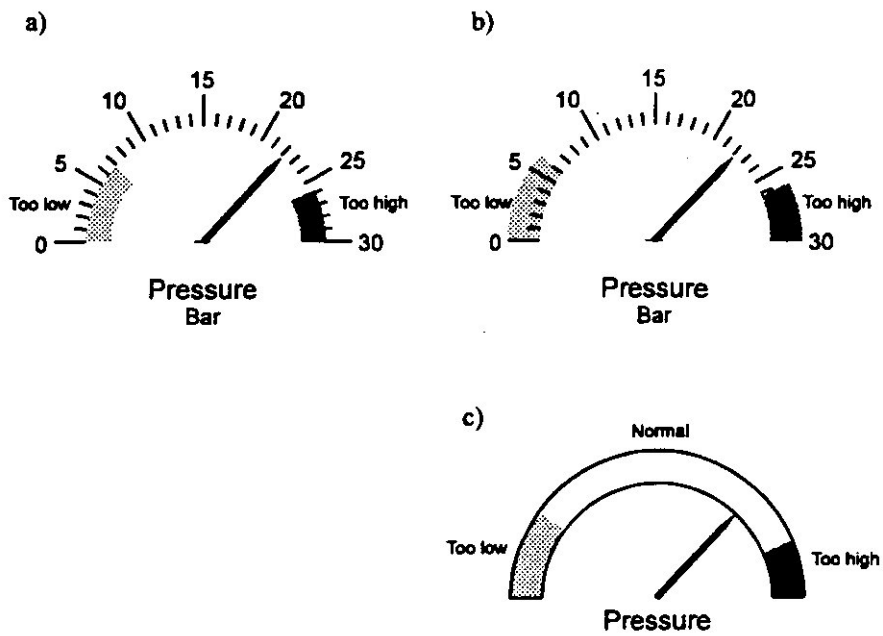

Figure 9.1:5: Methods of Adding Qualitative Coding to Quantitative Displays

NOTE: The method shown above (in a) is preferred since it does not reduce the contrast of the scale markers. If numerical values are not required then the method c is preferred, making the display move qualitative.

9.1.1.20 Status indicators

Although qualitative information on quantitative displays is used to associate status with values along a continuum, status indicators are more commonly thought of as displays of discrete, separate, qualitative information.

Status indicators typically have two states, 'on/off', though use of codes adds to the information content, especially where used for alarms and warnings. When designing status indicators the following general rules should be followed:

a. Apply indicators consistently to related information;

b. Hide indicators until they become active (to avoid difficulties in discriminating the status);

c. Avoid depicting more than 3 states per indicator (2 is preferred);

d. Do not use status indicators for 'normal' states, e.g. 'power on', unless there may be reason for the operator to believe otherwise;

e. Do not use colour alone to indicate status (combine with text, labels or symbols);

f. Do not use red or yellow at all unless the status is associated with danger or caution;

g. Ensure associated labels and codes are clear and meaningful so that the operator can easily understand the significance of the indicator.

h. Provide a facility for displaying all indicators to show the operator all the items of information that could be presented and to check that the indicators are functional.

i. Follow a 'dark quiet' philosophy for 'normal' states, to increase the salience of alarms and warnings, whereby status indicators are not visible during 'normal' conditions.

9.1.1.21 Alarms, warnings and attentional directors

Alarms and warnings are status indicators designed to convey a special message to the operator, usually requiring some action or indicating an imminent event. Most alarms must serve two purposes: to direct attention to the message and to convey the meaning of the message. Visual attention directors should be designed as part of an integrated philosophy for alarms and warnings that encompasses effective use of other display modalities as required (e.g. auditory attensons, vocal warnings, vibration displays - see other sections within this part, Def Stan 00-25 (Part HFE8)). For example, although reaction times in noisy environments are similar for both visual and auditory media, at low sound intensity levels, reaction to auditory stimuli is about 25 msecs quicker. In these circumstances, therefore, visual attentional directors should be augmented with attensons.

9.1.1.22 Classification

Prioritizing attentional directors should be central to the overall alarm philosophy and related to the operator's workload. The level of priority should be based on the following classification:

Advisors. Require general awareness of a marginal or predicted imminent condition
Cautions. Require immediate attention and a rapid response.
Warnings. Rrequire immediate attention and an immediate response.

NOTE: Some sources make the distinction between warnings as predictors of a future hazardous state and alarms as informers of a current hazardous state.

In practical terms, assigning the above classifications to events means first having to determine all the potential system failures or external situations that may occur (e.g. using a task analysis) and then categorizing their implications for operator's safety and performance. In doing so it is worth considering the following:

a. What are the consequences of the event to:
   i. the operator?
   ii. the operational objective?
   iii. the system and equipment?
b. Can the system respond to the event?
c. Can the operator respond to the event?
d. How quickly is it imperative the system or operator respond?
e. How quickly can the system and/or operator respond?
f. How adequately can the system or operator respond?
g. What remedial actions are required?
h. Under what conditions will the alarm be displayed?
i. What are the consequences of ignoring the alarm?

The designer should be aware of situations in which it may be best not to present alarm or warning information. In general, alarm and warning information should only be presented if:

a. all the criteria for presenting the alarm are satisfied (e.g. present 'canopy unlocked' alarm if both the canopy is unlocked and the aircraft is airborne);
b. there is confidence in the veracity of the information;
c. the operator is able to respond;
d. the operator's response can be effective; and
e. the system will not respond sufficiently.

9.1.1.23 Factors affecting detection

Detection of an attentional director is influenced by a combination of its size, colour, luminance contrast, shape, its position in the visual field and is also affected by ambient illumination and whether it flashes.

Clearly, high priority information requires maximum performance enhancement. The ability to detect stimuli is related to background 'noise'. Up to certain levels, the higher the ratio between signal and noise, the higher the likelihood of detection. Text characters larger than about 60 mins of arc in height, for example, offer no significant benefit for presenting alarm and warning information. For maximum discriminability the luminance of alarm and warning information should be at least twice that of other displays in the visual environment. Where the effect on contrast is insignificant, combining the information with other forms of coding may be appropriate. For example, detection and colour identification are more difficult under high ambient illumination due to contrast effects.

The position in the visual field also determines the likelihood and nature of the perception of the alarm. For example, perception of red information is about 75% slower than the perception of other information in peripheral vision.

Signals presented in the bottom of the visual field (about 60 mins below the line of sight) are detected slightly faster than those at the top.

The shape of attentional directors, however, has not been found to be significant though an equilateral triangle inverted on its apex, has been preferred by some users, followed by a square on an apex.

9.1.1.24 Flashing and Apparent Motion

Flashing signals are detected quicker than steady displays but the effect is diminished if the background includes flashing stimuli. The frequency should be between 3 and 10 Hz, though 4 is preferred with a duty cycle of 50%. Text should flash at a maximum of 2 Hz and the duty cycle should be skewed so that the text is visible for 70% of the time, to increase ease of reading.

Depending on size and contrast, close alternately flashing stimuli in peripheral vision can appear as one moving stimulus, caused by an effect sometimes referred to as stroboscopic apparent motion. This has several implications for attentional directors. Firstly, two alarms may be perceived as only one, hence all flashing indicators should be synchronized. Though some studies have indicated that apparent motion may be a good attentional director, it is not appropriate in most situations since its effect is inconsistent i.e. the effect is not apparent in towards the centre of the visual field and it disappears once the operator has fixated upon its source.

9.1.1.25 False Alarms

Though superficially obvious, eliminating false alarms should be given the highest priority. If a signal has been shown to be unreliable it will be ignored. Even if the operator only suspects the signal to be unreliable, it is possible that he/she will take no action until the signal is reinforced with supporting information. Similarly, ‘normal’ alarms or warnings should not exist i.e. if an alarm is assigned the wrong status, or has a historical change in status such that it does not require immediate action - and is consequently ignored, its future effectiveness and the effectiveness of other warnings are undermined. The designer should, therefore, be aware of deviations from original design and event criteria that may influence the alarm and warning philosophy, as part of the evolutionary design process.

9.1.1.26 Alarms and Warnings: Design Checklist

a. Eliminate the possibility of confusing alarms with any other type of display.
b. Present attentional directors close to the operator's line of sight: within a maximum 15° for high priority alarms and 30° for all other warnings.
c. Use a master signal within 15° of the line of sight if attentional directors cannot be placed within 30°.
d. Use negative polarity for high priority alarm text and symbols and positive polarity for low priority alarm text and symbols.
e. Where possible, reduce workload from other tasks when presenting alarms.
f. Ensure alarms are presented until the operator has responded or until the alarm state is no longer active.
g. Provide a confidence test facility for displaying the alarms, to show the operator all the items of information that could be presented and to check that the alarms are functional.

h. Use larger characters for alarm text (up to 60 mins of arc), especially under adverse viewing conditions.
i. Ensure alarms have at least twice the luminance of other displays in the working environment.
j. Use flash coding sparingly for directing attention.
k. Where flash coding is used, ensure:
    i. the background is free of flashing stimuli;
    ii. all flashing alarms are synchronized at between 2 and 10 Hz (4 Hz is preferred) with a duty cycle of 50%;
    iii. text flashes at no more than 2 Hz, with a duty cycle of 70%.
l. Add auditory or voice signals to high priority alarms.
m. Whilst directing attention, alarms and warning should not be so intense that they interfere with task performance.

9.1.1.27 Representational Displays

The purpose of a representational display is to integrate qualitative information into a pictorial or symbolic form to make it easier for the operator to conceptualize relationships between objects. For example, a map combines, in a graphical presentation, information concerning both the relative position and separation of two objects. Presenting information in this way is useful because it can reduce the complexity of the operator's mental operations in transforming the displayed output into meaningful information. In this example the operator does not have to mentally convert numerical information (e.g. bearing, distance) into a spatial format before understanding the significance of the information.

Conversely, representational displays allow the designer to add useful information that does not exist in the real world. Some nautical active radar displays, for example, can show the predicted path and position of a vessel after a given time (usually represented by a straight line in front of the vessel).

Increasingly common is a representational display that depicts a ‘virtual environment’ (commonly referred to as ‘virtual reality’). Such displays present the operator with either a true three-dimensional image of a space and objects (if the display is ‘immersive’), or a two-dimensional representation of a three-dimensional space and objects. The effectiveness of virtual and other representational displays is in portraying relationships between objects. The most significant aspects of the relationship and the important design implications are described below.

9.1.1.28 Schematic and symbolic representations

Representational displays are most effective when they are kept simple, partly because of the variety and relative unpredictability of search methods used to perceived visual information in complex displays. Simplification also means the real-world information is reduced in some way, usually some detail is lost and hence the operator has less information to process (e.g. maps do not present every leaf on every tree, they merely indicate the wooded area). One of the most important aspects in designing effective representational displays is ensuring the information is task-relevant i.e. reducing the information to its critical elements whilst still providing adequate detail to complete the task. The reduction in the level of detail means that the display becomes symbolic or schematic.

The adequacy of the information depends on the task. For example, if the purpose of the display is to provide route guidance, then some contextual information (e.g. landmarks) and

information regarding the operator's orientation may be required. If, however, the purpose is to show the movements of naval vessels in an area, information regarding the orientation of each vessel relative to the others is more important, whereas depicting individual waves is unnecessary.

The task information should dictate how pictorial or abstract that representation should be. For example, the difference in appearance between enemy and friendly aircraft can be too subtle to discriminate quickly and accurately, and hence an abstract, symbolic representation using different geometric shapes may be the best method. Schematic wiring diagrams are useful for understanding the connections between electrical components but do not give reliable information about their relative positions (e.g. distances apart, etc). Where such information is required a less abstract, more pictorial representation should be used.

9.1.1.29 Orientation

The relative orientation of the real objects represented in the display, with respect to each other and to the operator, should always be clear. Studies have shown various effects on operator's perception of the vertical plane with respect to the ground. For example, accurate perception of orientation is affected by head tilt, both sideways and backwards (related to the position of sensors in the inner ear), body tilt, displacement of gravitational force (e.g. in a steeply banking aircraft), and upon abrupt cessation of head or body rotation (e.g. when tracking an airborne target from the ground). Therefore, representational displays should normally present an orientation reference, either to the vertical, or to a horizontal direction (e.g. 'magnetic North' or 'straight ahead'). The effectiveness of displays designed specifically to aid orientation (such as a pitch ladder or an artificial horizon) relies on an understanding of what is fixed relative to the operator, e.g. the aircraft or the ground.

Depicting orientation of objects relative to each other can be more difficult since details of the nature (or behaviour) of each object need to be displayed and identified by the operator, e.g. front and back, top and bottom, direction of motion, size. The bow of a ship, for example, may be represented symbolically with an apex.

9.1.1.30 Scale

There is a trade-off within a given display size between providing sufficient detail to recognise or identify objects and providing sufficient coverage to display all the objects in an area. A large scale can show more detail for each object but present fewer of them, potentially presenting a misleading representation of the situation i.e. the operator may not have the 'full picture'. Conversely, a small scale allows presentation of many objects but in less detail, making recognition and identification of each object difficult. Where possible, the operator should be able to adjust the overall scale.

There is also a scale trade-off between the size of displayed objects (relative to each other and to the background environment) and the accuracy and precision of the display. For objects to be easily discriminated, they may have to be presented larger than their true relative size (e.g. relatively large symbols for buildings in remote areas on maps, versus built-up areas where only boundaries are indicated). This should always be made clear, otherwise the operator may assume a false relationship, e.g. that one object is larger or nearer than another.

9.1.1.31 Two-dimensional representation of depth

Some displays require two-dimensional representation of three-dimensional images. An important mechanism for depth perception is binocular vision, where combining the two slightly different views received at each eye is used as a perceptual cue. Unless using a binocular immersive display that presents a laterally disparate image to each eye, two-dimensional displays cannot exploit this cue. There are, nonetheless, a number of static and dynamic monocular cues which can be used:

Static cues:

a. Overlaid objects. Partially obscuring one object with another gives a powerful impression of depth. This is particularly significant where the overlaid object interrupts the contours of another object because it becomes clear which object is the 'figure' and which is the 'ground', so reducing the possibility of visual illusion.

b. Texture graduation. By graduating the density of texture an effective visual gradient can be established that makes objects appear to have depth.

c. Linear perspective. Using lines that converge towards a point creates a depth impression. As a consistent width between parallel lines is viewed from farther away it subtends a smaller visual angle. This is perceived as a cue to depth.

d. Shadow. Using shading can give objects apparent depth, highlighted areas appear nearer than shaded areas.

e. Detail resolution. The operator's visual acuity limits the ability to resolve details on distant objects, thus, the designer can remove details from objects intended to appear distant.

f. Familiarity with relative size. The operator's knowledge of the size of familiar objects (especially those which are quite small) means that, if they occupy a large area of the visual field, they can be perceived as near.

g. Luminance variations. An object of higher luminance than another can appear closer than the other.

h. Chromostereopsis. Spectrally extreme colours (e.g. blue and red) appear at different depths, but which appears in front of the other depends on pupil size, hence this cue does not produce constant effects if there is variation in luminance and illumination.

i. Atmospheric attention. During daylight the colour of objects are paler and shift towards the 'blue' end of the visible spectrum the further they are from the observer.

Dynamic cues:

j. Motion parallax. When an operator moves, objects farther than the point of fixation move in the same direction as the operator, whereas nearer objects move in the opposite direction. The speed of the movement also increases with the distance from the observer's location. Incorporating these two effects into displays depicting a moving viewpoint provides a depth cue.

k. Changes in perspective. The change in perspective when moving past an object is less for distant objects. Changing the perspective less in objects intended to appear distant produces a depth effect.

9.1.1.32 Metaphorical Representations

The use of design metaphors can help operators understand displayed information by relating the information to a familiar concept. For example, much research effort has been invested in presenting information to military pilots concerning safe flight routes (both to avoid physical obstacles and strategic threats). The resultant displays present a 'flight corridor', within which pilots should fly to stay safe. The flight corridor is essentially a metaphorical representation of a 'real world' corridor, insofar as its appearance resembles a real corridor (usually two walls, ceiling and floor or tunnel-like, depicted by a series of rectangles or ellipses) and the display responds in such a way that flying 'through' it gives the impression of travelling along a corridor (the rectangles become larger as if the aircraft is moving through them).

Metaphorical representations are not merely forms of visual cue, they also allow the designer to exploit operators' conceptualizations of how things work. In other words, metaphors can cause assumption about the behaviour of the displayed information, and it is for this reason that they should be used with extreme caution. While the metaphor accurately represents the 'real-world referent', it can provide a powerful conceptual 'short-cut', which facilitates rapid interpretation of the displayed information and aids the learning process. However, metaphors rarely 'map' completely from one domain to another i.e. the information portrayed in the display and the referent almost invariably differ in some respect. If the limitations of the metaphor, as applied to the design, are not clear to the operator, a false assumption may be developed about the displayed information. For example, if a pilot perceives the flight corridor as if it were tunnel-like he/she may consequently formulate the potentially false impression that the hazards are predominantly above the flight path (since most tunnels allow people travel under obstacles).

9.1.1.33 Representational displays: design checklist

a. Keep it simple.
b. Provide only task-relevant information.
c. Base the level of abstraction on the representative-ness required for the operator's tasks.
d. Consider symbols where pictograms would be too similar (see Symbols).
e. Provide 'global' and local orientation references (e.g. '↑ North', '↑ Forward', '↑ This way up').
f. Provide object-specific orientation cues (e.g. sloped wings on aircraft symbol).
g. Use scale appropriate to the task, larger scale for more detail, smaller scale for greater coverage.
h. Where possible, provide a facility for the operator to adjust scale.
i. Indicate where schematic representations are not to scale.
j. Indicate where objects differ in scale.
k. Use monocular depth cures where appropriate.

9.1.2 Coding

Alphanumeric or graphical 'short forms' used to represent information can be effective in reducing clutter where there are space limitations (e.g. symbols on maps). By reducing the

information, codes can also speed user response times, provided that the mental translation from code to information is simple (e.g. traffic signs). The correct interpretation of codes depends on the context in which they are used. For example, a cross within a circle, denotes an overcast state as a meteorological reference, whereas in military maps it indicates the presence of a medical unit. Wherever possible, codes should exploit and follow conventions with which the operators may be familiar both in the operational context and elsewhere. A means of reinforcing coding is to use redundancy whereby more than one coding technique is used to distinguish the coded information, e.g. by adding colour to symbols. This can provide beneficial reinforcement of a conceptual distinction provided it does not clash with or contradict other coding. Guidance on colour coding is given in this part and Def Stan 00-25 (Part 25). If a type of coding is used for alerting the operator (e.g. flashing) it should not be used for any other purpose, in any of the displays that form the operators workstation.

9.1.2.1 Alphanumeric codes

All alphanumeric codes should be designed for the least skilled operator and should be both visually and auditorily distinct. Codes are more meaningful if clear associations exist between coded information and the intended meaning, such as the use of mnemonics. Special attention should be paid to existing conventions and specific terminology (e.g. common three-letter-abbreviations, or 'TLAs'). Codes should be applied consistently to all instances of the displayed information. Nonetheless the coding need not be arbitrarily applied to all information in a conceptual set.

Priority should be given to preserving the meaningfulness and clarity of the information, by reducing the need for, and degree of translation required, to understand the code. For example, where the design has limited space (e.g. on a soft-key), no benefit is derived if, in pursuit of consistency with codes for other (longer) words, '**Fuel**' is abbreviated to '**FL**'. Alphabetic codes are easier to learn and recall than numeric codes and should be used in preference unless the task requires rapid simple transfer of the displayed code (e.g. repeating a grid reference), or entering codes into a system, in which case numeric codes may be easier for the user to reproduce and require simpler input devices (fewer keys, simpler display, etc). Alphabetic codes can represent more unique values in a given number of digits than numeric codes. Combining letters and numerals has the advantage of allowing shorter codes, than is possible with either single system, because the number of unique values per digit is extended (from 10 to 36). However, care should be taken to avoid use of frequently used pairs, e.g. S&5, 1&1, O&0, Z&2. Unless the code may need to be transferred (e.g. input into a flight system), codes combining letters and numerals should contain appropriate spaces between groups of letters or numerals rather than any other delimiting character, for example, use; 'VIN 50 NK 008 772' instead of 'VIN50-KN00-8772'.

9.1.2.2 Abbreviation and truncation

Abbreviations should be as short as possible (maximum 6 letters) whilst remaining unique. Truncation may be used as an alternative but methods of coding should not be mixed within a display i.e. do not use a combination of abbreviation and truncation for different items of information within a display. A common method for developing abbreviations for military aircraft displays is to first eliminate all vowels from the word to be abbreviated, then remove one of any adjacent pair of identical letters. This will result in the word being shortened. If further abbreviation is required, e.g. to enable presentation on a 4-character 'soft-key', then an operator trial to test comprehension of the proposed abbreviation should be conducted. In many application areas, such as in the cockpit environment, glossaries of commonly used abbreviations exist (e.g. STANAG 3647), however these are often aircraft-dependent.

Great care should be taken when defining abbreviations that differ to those already known by the target audience, e.g. pilots, to ensure there is minimum potential for misunderstanding when transferring between aircraft.

9.1.2.3 Character highlighting

The use of intensity (bright characters), stroke width (bold characters) or underlining characters as a means of coding for text should be limited to applications that only require discriminations between two categories of displayed information. Using alternative typefaces or slanting the text (italics) should be avoided since the effect varies depending on the characters to which it is applied.

9.1.2.4 Graphical coding

Coding using different sizes and pattern shapes is useful for applications that require language independence and fast discrimination of information. The disadvantage is that the meaning of the coding requires explanation and may require learning.

9.1.2.5 Size

The maximum number of discernible size code levels for efficient interpretation should be three, though two levels are preferred for easier discrimination. Size is best used where the overall density of information is low. The proportional size of larger levels in the code should be a minimum of 1.5 times the size of the level below.

9.1.2.6 Pattern shape

The maximum number of discernible levels for lines (e.g. dashed, dotted, bold) should be eight, though six is preferred. For the purposes of maximum discrimination, symbols should be designed for maximum dissimilarity, e.g. geometric shapes used in advanced radar displays where ϒ and ♦, respectively, indicate friendly and hostile responses following interrogation. Symbolic pictograms are usually easier to comprehend than abstract shapes provided they have conceptually simple referents.

9.1.2.7 Flash coding

Flashing or blinking is effective to draw attention to information if used sparingly. Since coded information must still be recognized and understood, flashing characteristics are not necessarily the same as those for attentional directors. Performance is best if flash coding has only two levels, steady state and flashing, though up to four levels can be reliably distinguished if the information is displayed near the centre of the visual field. The flash rate should be between 1 and 3 Hz (1-5 Hz for FPDs), with a 50% duty cycle. Text should flash at a maximum of 2 Hz and should have minimum duty cycle of 70% for ease of reading. In all cases it should be possible to switch off flash coding, and where possible, all flashing displays should be synchronized to avoid stroboscopic apparent motion.

Colour coding. Colour may be used as a form of redundant coding, but its benefit is highly situation-specific. Redundant colour coding can significantly reduce search times, both for location and counting of displayed objects, especially if combined with shape or alphanumerics. In such tasks, the benefit increases with the density of the information (clutter). Little benefit is gained in monitoring tasks or where the significance of information is related to the position in the visual field. Similarly, using arbitrary colours or more than 6-7 colours has been shown to reduce performance, especially in computer displays. When selecting colours, functional meaning must always take priority over aesthetics.

The significance of the colour should be clear and unambiguous to the operators. Where relevant, the conventions in Table 9.1:2 should be observed.

COLOUR	GENERAL CONVENTIONS	OTHER ASSOCIATIONS	TASK-SPECIFIC ASSOCIATIONS E.G. TACTICAL MAP DISPLAYS
Red	Danger emergency failure	Stop no go fire/hot	enemy/hostile
Blue	mandatory	water/sky off cold	friendly
Green	safe condition, proceed	safe passage, exit healthy	human made obstacle
Yellow	caution	Ambient delay warm	NBC events
White	operational	Pure cold new	none

Table 9.1:2: Common Associations for Colours

Where the above conventions cannot be applied (e.g. in dark adapted conditions, or use of Night Vision Goggles) trials should be conducted to ensure the operators are able to understand what the colours mean.

9.1.2.8 Colour coding: design checklist

a. Use colour as a redundant form of coding only.
b. Design for monochrome first.
c. Observe task-specific conventions and be aware of other associations.
d. Use colour *either* to help:
    i. locate;
    ii. classify;
    iii. associate; or
    iv. highlight importance.
e. Do not use colour coding in the periphery of the visual field.
f. Do not use saturated adjacent reds and blues.
g. Do not use saturated blue for fine detail.
h. Where identification or recognition of colours is required use a dark or dim background.
i. Refer to Def Stan 00-25 (Part 25).

9.1.2.9 Symbols

Symbols can be useful in transmitting information quickly. In practical terms symbols can occupy less space than text messages conveying the same information, but there is also perceptual justification for using symbols:

a. The meaning of familiar objects is perceived quicker from a symbol than from printed words, especially if the concept includes a negative (e.g. No smoking).

b. Symbols can generally be understood irrespective of language, although accurate perception is not always culturally independent.

c. Using symbols can also avoid the need for complex or highly specific vocabulary and grammar (e.g. NATO Standard Map Marking Symbology).

d. Conversely, symbols can be used to generalize the meaning of information (e.g. ticks and crosses **x**).

e. Symbols can add information to increase differentiation between similar visual structures that would otherwise be difficult to discriminate (e.g. adding dashes to differentiate canals, and rivers in maps).

A basic issue in designing or selecting symbols is how abstract or concrete, i.e. pictorial, to make the symbol. In this respect, it is useful to distinguish three types of symbol:

f. Representational; fairly accurate, simplified pictograms, silhouettes or outlines of familiar objects, e.g. for tank.
g. Abstract; symbols that reduce the essential elements of a message to graphic terms, retaining only faint resemblance to the original concept, e.g. using a schematic representation of a propeller to indicate an Air Force Unit.
h. Arbitrary; invented symbols (often geometric shapes) that have arbitrarily assigned associations, e.g. to indicate a hostile aircraft.

9.1.2.10 Symbols: design checklist

<u>Consider the visual context:</u>

a. the size and contrast of the symbols, large values help discrimination and identification;
b. the viewing conditions, e.g. high ambient illumination may reduce contrast;
c. the amount of other visual information that may be distracting;
d. the consequences of the symbol being unnoticed.

<u>Consider the task context:</u>

e. the overall goal, e.g. requirement for accuracy vs. speed;
f. the specific visual task:
    i. search requires distinctive symbols;
    ii. recognition requires discriminable symbols;
    iii. identification requires meaningful symbols.

g. whether interpretation or naming of the symbol are necessary, it may be appropriate to add text to the symbol to alter the meaning or simply to use text instead;

h. whether presentation of the symbol is predictable by the operator, highly predictable symbols are recognized more quickly but with more identification errors;

i. the number and similarity of symbols within the set, a small number of highly distinctive symbols within a related set produces fewest errors;

j. the number of identical symbols displayed simultaneously, the more symbols, the harder the search task;

k. whether the symbols are moving, speed, size and graphical form influence the probability of detection;

l. the consequences of misinterpretation.

Consider the target audience:

m. the operator's level of training, e.g. learning the symbol set

n. operator's level of familiarity with the graphical form (e.g. specific thermal signatures of various tanks);

o. cultural associations (e.g. interpretation by operators from hot climates of a snow hazard warning symbol may be unreliable).

Consider the purpose of the symbol:

p. Is the referent an object, system, function, or state?
    i. Concrete objects are most suitable for pictorial representations.
    ii. Systems may involve conceptual groups of related objects and are therefore more difficult to represent.
    iii. Functions and states are abstract and often require additional text.
q. Does the symbol require portrayal of negative or restrictive concepts?
    i. Graphical representation of concepts can unintentionally reinforce the concept if the negative or restrictive indicator is not clear (e.g. speed limit signs do not indicate whether the driver must keep below, above or exactly at the speed shown).

Design new symbols according to the following general principles:

r. Involve operators in the design, especially at the early conceptual stage, e.g. ask representative operators to draw suitable symbols.
s. Keep the design as simple as possible.
t. Use solid shapes in preference to lines.
u. Use a closed figure, as it will often be easier to understand unless there is reason for the outline to be discontinuous.
v. Incorporate all parts of the symbol within a single boundary.
w. Use standard symbols where possible.
x. Test new symbols with operator trials.

9.1.2.11 Existing standards and conventions

Many civilian standards and conventions exist concerning the design of symbols for different domains, such as ISO 2575 for displays in road vehicles and ISO 7000 for symbols for use on general equipment. Similarly, specific standards already exist for symbols (and text) used in signs where consistency and clarity of presentation is vital to understanding, e.g. BS 5499 (parts 1-6). Standards are also in preparation for symbols or 'icons' used to represent control actions in software GUIs (see Part HFE5). The designer should follow these standards where applicable but also be aware of contradictory information that may be specific to military applications or differ between forces.

9.1.2.12 Symbols for maps and charts

Within NATO, a substantial degree of standardization has been achieved and agreements relating to maps and charts have been ratified by the United Kingdom. Any agency concerned with the design of maps and charts or of equipment which utilises maps and charts should first consult the UK Hydrographic Office on Admiralty chart requirements or the Director of Military Survey on Land and Air map, chart and data requirements. Other symbol sets are prescribed in specific publications, e.g. Staff Officers Handbook.

9.1.2.13 Signs

The following conventions outlined in BS 5499-5 should be followed where applicable.

Mandatory
Prohibition
Warning
Safe Condition
Fire related

9.1.2.14 Evaluating symbol meaning

To ensure symbols clearly represent what they are supposed to represent they should be evaluated experimentally. Several test methods exist, e.g. BS ISO 9186. Such methods typically incorporate three types of trial:

a. 'Naming tests', in which operators are presented with symbols and must describe their interpretation of the meanings, often within a specified number of words.
b. 'Matching tests', which operators must match a list of symbols to a list of meanings.
c. 'Ranked matching tests', in which operators must rank several alternative symbols for each listed meaning.

Particular significance should be given to the results of the naming test if the symbols are used for status indicators and warnings. The results of the matching tests are more useful for search tasks, for assigning symbols to controls. Though less methodological guidelines exist, tests should also be carried out for ease of learning, familiarity and physical discrimination.

9.1.2.15 Use of Text

Although pictograms and symbols can provide useful perceptual short cuts, text can often out-perform graphical presentation of information, especially if information has to be named. The following sub-clauses provide guidance on the effects of meaning and format of text on comprehension.

9.1.2.16 Semantics

The meaning of words not only affects correct comprehension, but also the speed of reading. Performance is influenced by the type of material read; the number of propositions within the statement; and how the information is used (e.g. reading for later recall takes longer than straightforward comprehension). The designer should use the principles described below to optimize reading performance.

9.1.2.17 Accurate, fast comprehension: design checklist

Style:

a. Use short expressions.
b. Use active (rather than passive) expressions, e.g. 'the target passed interrogation' rather than 'interrogation was passed by the target'.
c. Avoid statements for which the meaning hinges on punctuation. For example, 'the ship, changing course, took evasive action' (with appropriate commas) means 'the ship took evasive action by changing course' whereas 'the ship changing course took evasive action' (without commas) means 'the ship that was already changing course took evasive action'.
d. Avoid informal or humorous expressions, e.g. 'best shot' meaning 'best chance'.

Order:

e. Ensure the meaning is presented early in a sentence.
f. Where a statement describes a sequence of events, order the words to correspond with the sequence (e.g. for instructions requiring sequential actions).
g. Use consistent ordering for noun verb pairs, e.g. 'target tracking' vs. 'tracking target'.
h. Use relative pronouns to introduce phrases, e.g. 'which', 'that', etc.
i. Use short text (preferably single words) for rapid serial visual presentation (also use a fixed location and present fewer than 10 words per second).

Negatives:

j. Avoid negative statements, e.g. 'This is not an infra-red display'.
k. Avoid multiple negatives, e.g. 'Non-thermal images are invisible'.
l. Avoid qualifying negatives, e.g. 'except'.
m. Avoid nested clauses, e.g. 'the target that the aircraft from the ship acquired took evasive action'.

Modifiers:

n. Use noun modifiers rather than successive subordinate clauses, e.g. 'moving tank' rather than 'tank which is moving'.
o. Avoid vague modifiers, e.g. 'many'.
p. Avoid weak modifiers, e.g. 'quite', 'rather', 'well-', 'fairly', etc.
q. Avoid redundant modifiers, e.g. 'sufficient enough'.
r. Avoid contradictory modifiers, e.g. 'quite extreme'.

Confusions:

s. Avoid phonetic confusions, e.g. ‘there’ vs. ‘their’.
t. Avoid common semantic confusions, e.g. ‘continually’ vs. ‘continuously’.
u. Avoid phonetic and semantic confusions, e.g. ‘fire’ (flames) vs. ‘fire’ (launch).

9.1.2.18 Format

Aspects of the format of text can influence comprehension, including the character typeface, use of typographical cueing, text alignment and grouping.

9.1.2.19 Character typeface.

Under ideal reading conditions (suitable physical conditions, no time pressure, etc) typeface has little effect on the accuracy of text perception. Where fast reading under adverse conditions is required however, most sources favour simple ‘gothic’ typefaces without serifs, such as Arial, Helvetica, Sans Serif. The characteristics that make such typefaces easier to read are not entirely clear but opinion is agreed that desirable properties include appropriate height-to-width and strike width-to-height ratios, a basic vertical orientation, and the absence of detail that is extraneous to the unique geometric shape of characters, e.g. serifs.

9.1.2.20 Typographical cueing

Typographical cues can be used to differentiate specific text. Some common methods are listed below which either alter the geometric shape of characters or use additional characters to draw attention to the text.

Bold characters. Increasing the stroke width-to-height ratio can impede easy reading where characters are small and can be missed in low contrast presentations or where large characters are used.

Italic/slanted characters. Slanting characters are commonly used for phonetic emphasis but can make them more difficult to read, especially if the typeface has serifs.

Change of polarity. This is highly effective but can alter the perceived clarity of the displayed image.

Indented text. This is most effective for blocks of text but has the disadvantage that it relies upon a relatively large area of non-indented text.

<u>Underlining</u> characters. This often has the disadvantage of obscuring lowercase descenders (e.g. '<u>gpjy</u>').

Separators, e.g. using - dashes - or blank spaces around text. Dashes can be confused with hyphens and minus symbols and spaces may not be obvious, especially in text that is both right and left aligned.

9.1.2.21 Case

Text with a conventional mix of upper and lowercase characters is about 13% quicker to read than text that is all uppercase. Several reasons account for this, including the semantic associations with uppercase (beginning a sentence, proper noun, etc), recognition of the shape of words and the greater geometric differentiation of lowercase letters (e.g. 'FE' vs. 'fe', 'BR' vs. 'br').

9.1.2.22 Alignment

Sometimes referred to as 'justification', alignment of text and numbers can influence its readability, especially in lists. Aligning text to the left produces a ragged appearance at the right-hand edge of text blocks which provides a visual cue for the end of each line, thought to enhance readability. On this basis, right-alignment should therefore enhance performance further, since it is moving from the end of a line to the beginning of the next that involves the largest eye movement, and hence the greatest scope for error. However, there is no demonstrable evidence for this.

The more profound effect appears to be provision of consistent inter-word spacing that is possible with left- or right-aligned text. The optimum proportional dimensions that yield best performance have not been well established, but many sources recommend gaps of at least one character space.

The resolution of many media displaying generated or printed text is not sufficiently fine to space right- and left-aligned text without producing large gap variations, or requiring hyphens which make word recognition more difficult. Notwithstanding the disadvantages, aligning text on both sides can produce a stronger visual cue for column boundaries or blocks of text where grouping is necessary.

9.1.2.23 Grouping

When reading, the eye moves and fixates upon information in succession. The important issue for the designer is the amount of text from which useful information can be obtained by each fixation. The perceptual span around the point of fixation is generally skewed to the right (at least for readers of English). That is, the first three to four letters of a word can be perceived to the left and up to about 15 letters from the same or successive words can be perceived to the right. This effect is influenced by the context in which the words are presented and there is evidence to suggest that the total perceptual span for word recognition is larger (for example, visually similar or highly predictable words are more readily perceived).

For the designer this means that keeping lines and paragraphs or text blocks short is likely to enhance reading performance. This should be balanced by the provision of sufficient context and preserving semantic associations, using the following guidelines:

a. Group information according to a logical and recognisable order, e.g.:
    i. alphabetical, chronological, numerical, or;
    ii. by importance, functional groups, frequency or sequence of use.
b. Separate semantic groups (e.g. paragraphs, lists, tabular data) with a blank line above and below and at least four character widths to the left and right (three if the text is left- and right-aligned).

9.1.2.24 Text format: design checklist

a. Use a 'plain' typeface that has a vertical orientation with correct geometric proportions, and without serifs.
b. Use typographical cueing sparingly and avoid:
    i. compromising appropriate stroke width-height ratios for bold text;
    ii. slanting characters;
    iii. indenting more than three adjacent text blocks or text block shorter than three lines;
    iv. underlining lowercase text;
    v. confusing separators (e.g. dash '-' and minus symbol '-').
c. Use the conventional mix of upper and lowercase characters for all words other than acronyms and mnemonics.
d. Provide consistent inter-word spacing, with double spaces at the end of sentences.
e. Left-align text blocks unless discrimination of text columns is critical, in which case use left-aligned text or text that is both left- and right-aligned.
f. Right-align table headings for columns containing numerical information.
g. Right-align numerical lists not containing decimals.
h. Align the decimal points in numerical lists containing decimals and always provide a leading zero before the decimal point for decimal fractions.
i. Provide consistent inter-line spacing, with at least one blank line between text blocks.
j. Separate columns by at least 4 character widths to the left and right if the text is left- or right-aligned or by three character widths if the text is left- and right-aligned.
k. Observe standard formats, e.g. time format should be: ddhhmmZMMMyy, where dd is the calendar day, hh = hour (24 hour notation), mm = minutes past the hour, Z is the reference time zone (Z = Greenwich Mean Time, A = local time, B = British summer Time), MMM is the month and yy is the year, e.g. '271330ZOCT86' denotes 1.30 pm GMT on October 27 1986.
l. See guidance on Alphanumeric codes (9.1.2.1).

9.1.2.25 Display Integration and Grouping

Displays are rarely used in isolation and hence designing appropriate layouts for groups of displays can be as important as the design of each display. Furthermore, there may be grounds for combining more than one display or even integrating the information from several displays into one, if it would aid interpretation of the information. In designing layout and grouping, the following principles should be taken into consideration:

9.1.2.26 Design to support task requirements

Although it appears to be an obvious requirement, many performance failures arise as a result of well-designed displays being poorly positioned, inhibiting easy reading at the appropriate time.

The designer should consider the context of use, in particular the:

a. *importance* of the displayed information, both in terms of the overall objective and relative to other displays;
b. *sequence* in which information may be required during normal operation and under adverse conditions; and
c. *frequency* with which the information should, and can, be viewed.

Clearly, critically *important* information should be displayed close to the operator's 'normal' line of sight, e.g. altitude information on a head-up display. Similarly, *frequently used* displays should also be positioned so that they do not require gross movement of the head or eyes, especially if viewing them forces the operator to shift attention from the primary task. Where explicit or implicit task sequences exist, information should be presented left-to-right and top-to-bottom or in clockwise rotation. Even if there is no overall sequence involving all the information displayed at the workstation, it may be appropriate to organize the displays into sub-groups.

Grouping the displays according to the task requirements should be based on either:

d. **Sub-task sequence**, e.g. start-up checks;
e. **Functional classification**, e.g. all displays associated with weapon systems;
f. **Semantic classification**, e.g. all displays showing alarm and warning information; or
g. **Control-display relationships**, e.g. display of heading setting adjacent to the heading setting control. (Displays associated with controls should normally be placed above the control.

For controls at approximately shoulder height, it may be best to position associated displays to the side, i.e. on the right side of controls operated by the left hand, or the left side of controls operated by the right hand to avoid obstructing line of sight to the display. In all cases, consistency and unobstructed sightlines should be given a priority.)

The designer should ensure delineation between groups is clear. This can be achieved using principles derived from Gestalt psychological theory, whereby information is thought to be mentally organized according to characteristics of its proximity and similarity. Hence, displays are typically grouped using appropriate spacing and boundaries, i.e. by proximity (see Figure 9.1:6 (a)). Where physical design constraints make this difficult, displays could be grouped using redundant coding, e.g. colour or some other common feature, i.e. by similarity (see Figure 9.1:6 (b)), or other features, such as the principles of closure and continuation, as shown in Figure 9.1:7.

Figure 9.1:6: Examples of Display Grouping using Human Factors Principles of Proximity and Similarity

NOTE:
(a) shows displays related to the left engines separated from those for the right engines using appropriate spacing.
(b) shows how displays can be grouped by similar features (here shade).

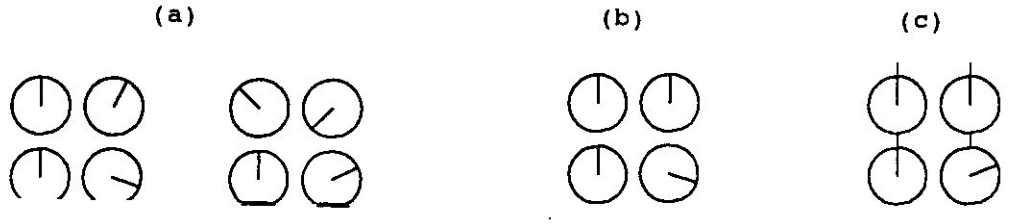

Figure 9.1:7: Examples of Display Arrangement using Human Factors Principles of Continuation and Closure to Facilitate Check-reading

NOTE: In all cases the bottom right display of each group of four shows an abnormal value.

(a) shows displays unaligned.
(b) shows displays with the normal positions aligned upwards (continuity).
(c) shows aligned normal positions plus supporting lines for each normal pointer position (closure).

9.1.2.27 Integrating information

To support the operator's task requirements there may be benefit in combining information from one or more sources and presenting it in one display. Such combinations typically involve presenting one source as a function of another (temporal) source. For example, graphically presenting information about a deep-sea diver's depth against time could assist in a decision about time required for decompression. Similarly, it may be possible to integrate information about contours and enemy activity for displaying a safe flight corridor to fast jet pilots.

When displaying combined information the following principles should be observed:

a. Information should only be integrated if it supports the operator's tasks directly.
b. Information should be integrated to minimize mental workload.
c. Where possible, the operator should have access to the constituent sources individually.
d. Presentation of the integrated information should be unambiguous.
e. Integrated information should not require or provoke unreliable extrapolation.
f. Interpretation of integrated information should not require complex mental operations.

9.1.2.28 Mental workload

The ability to perceive information from displays as the designer intends relies on taking account of the mental state of the operator. In order to undertake correct actions the operator must have an accurate situational awareness. This awareness is strongly influenced by the information presented in visual displays and by the operator's level of mental workload when the displays are viewed. BS EN ISO 10075 parts 1 and 2: 2000 give guidance on design to avoid excess workload and is summarised below.

Mental workload can be minimized as follows:

a. Provide unambiguous information:
   i. reduce the need for interpretation by providing adequate information;
   ii. suppress information (or detail) that is not task-relevant.

b. Avoid reliance on long-term memory:
   i. reinforce task goals;
   ii. provide meaningful cues.

c. Avoid forcing absolute judgements:
   i. provide a reference where possible so that relative judgements can be made instead.

d. Present information at appropriate rates:
   i. avoid time delays that cause anticipation;
   ii. avoid rapid sequential presentation of similar information that must be recalled later (to alleviate short-term memory load);
   iii. where possible provide information sequentially in discrete 'chunks' unless comparisons must be made;

e. Maximize discriminability:
   i. reduce visual noise;
   ii. use distinctive codes;
   iii. use redundancy (according to operational requirements) to increase the saliency of categorized information.

f. Avoid mental transformation:
   i. minimize the need to translate information spatially;
   ii. minimize the need to integrate information mentally;
   iii. minimize the number of dimensions upon which the information is based.

g. Maximize compatibility with ‘natural’ user expectations:
   i. ensure control-display relationships are consistent;
   ii. exploit stereotypes (e.g. clock face).

9.1.2.29 Graphical user interfaces

Guidance on graphical user interfaces (GUIs) is given in Def Stan 00-25 (Part HFE5). These are essentially software display environments in which the user interacts with applications via icons and pointers. Interaction is normally facilitated by the use of a mouse or other pointing device, with which the user interacts with displayed objects on the screen. The main benefit is in allowing the use of metaphors to increase the intuitiveness of operator input by graphically representing familiar scenarios, such as ‘the desktop’ in office work. This input is often referred to as ‘direct manipulation’. Direct manipulation GUI displays have not been widely employed in field systems, but are increasingly used in military aircraft for representation and configuration of mission variables (e.g. fuel distribution, selective jettison, etc).

9.1.2.30 Multi-media displays

There may be benefit in combining various methods of information presentation, such as words, pictures, video (and sound). Dealing with multiple sources and types of information is a common phenomenon in human interaction and therefore may be a 'natural' method of communicating information. Combining media has the advantage of aiding learning by reinforcing information in different modes. Alternatively, using different media for different tasks can theoretically allow more than one task to be carried out simultaneously. However, the combination also introduces complexity and can make the cognitive task (of processing the information) more difficult, especially where displays combine more than one visual presentation medium.

9.1.2.31 Multi-media: design checklist

a. Tasks can be easier to carry out if more than one display medium is provided.
b. Different tasks can be easier to carry out if different media are provided for each task.

Use still graphics for the:

c. representation of objects and highlighting features;
d. representation of objects that do not exist;
e. display of large amounts of numerical information (e.g. showing statistics and;
f. showing space and time relationships.
g. Use still images to portray detailed pictorial, or real-world information.
h. Do not use moving images (videos) or moving graphics (animations) unless they are central to the task.
i. Use moving graphics to show trends, or to express hypothetical scenarios (figures or events).
j. Use moving images to portray processes, actions, and descriptive information.
k. Do not use moving images to present large amounts of detailed information.
l. Allow the operator control over moving images or graphics (replay or skip sequences of information).
m. Do not use simultaneous moving images or graphics unless they are complementary to each other and are used for the same task.
n. Observe the principles for auditory display design given within other sections of this part of Def Stan 00-25 (Part HFE8).

9.1.2.32 Colour Vision

Colour vision is best in the foveal region. If colour is used, ensure that the area can be centrally fixated. For example, do not use colour in the peripheral visual field to gain attention.

Colour judgements require photopic lighting conditions. When making colour judgements from displays the luminance should be at least 35 cdm^{-2}.

Protective goggles or face masks will cause a loss of the field of view and have a marked effect on the detection of movement in the periphery of vision. They may also affect colour vision. This needs to be considered if individuals are wearing personal protective equipment for nuclear, biological or chemical protection.

9.1.2.33 Information Presentation

Military computer systems are capable of presenting users with large amounts of rapidly changing information. Humans, on the other hand, are limited in the rate at which they can exchange information with a system. Appropriate consideration of Human Factors issues in designing Human Computer Interfaces is necessary to ensure the accurate, reliable and timely exchange of information between a computer system and its human users.

This section identifies the major Human Factors considerations in the presentation of information.

It is generic to all information displays, but the reader should note that there are some principles specific relating to HCI and that technologies associated with human-computer interfaces are developing rapidly.

9.1.2.34 Guiding Principles

Information presented on visual displays shall be clear, meaningful, consistent, legible, discriminable and structured. The application and evaluation of these principles shall be based on an understanding of the tasks to be performed by users. The Design Authority shall ensure that the principles are applied appropriately.

9.1.2.35 Clarity

Information shall be presented such that it can be quickly located and understood by the intended users under operational conditions. Design considerations affecting clarity include the size, spacing and styling of text and graphics, the spatial arrangement and density of information and the organization of information into groups, pages or forms. Additional areas which should be considered are the relationship between the format in which information is displayed and the manner in which users use the information.

9.1.2.36 Meaningfulness

Information shall be unambiguous and meaningful to the target user population. Where information coding techniques are used, the meaning associated with codes shall be, as far as possible, based on associations with which the user population can be expected to be familiar, for example 'red' is commonly associated with danger.

Words, names and abbreviations shall be based on language and terminology used by the target user population. Data parameters and units shall use formats which are meaningful to the target users and consistent with the overall task context.

9.1.2.37 Consistency

The Design Authority shall ensure that information provided on displays is presented consistently. This includes the format, style and location of information presentation.

The principle of consistency also applies to:

a. the design of individual information items and object;
b. between related items on the same display;
c. throughout the user's overall task context (including other systems with which users can be expected to interact).

9.1.2.38 Legibility

Text and numeric characters shall be legible to the target user population under the intended conditions of use. Legibility shall be addressed at the lowest unit of text which is intended to convey meaningful information (i.e. whole words or individual characters).

9.1.2.39 Discriminability

The design of non-textual display items, including symbols, imagery, charts, tables and other graphical display components, shall ensure that target users can reliably discriminate between display elements. Discriminability shall be addressed at the smallest visual element intended to convey information.

9.1.2.40 Identifiability

The design of non-textual displayed items, including representative graphics, diagrammatic graphics and iconic graphics, shall ensure that target users can reliably identify a graphic in and out of context. Where a metaphor is being used, the image shall be identifiable in the context of the metaphor.

9.1.2.41 Structured Layouts

Information presented on displays shall be structured into organized groups of related information. Displays shall support users in making visual associations between related items. Information and related controls shall be organized into meaningful groups which are readily distinguished. Information groupings shall be based on expectations or associations which users can be expected to hold, or on groupings which logically arise out of the tasks supported. Information grouping shall be meaningful in the task context.

9.1.2.42 Critical Tasks

Special consideration shall be given to the presentation of information and the design of interactive dialogue to support tasks which are considered to be critical. Information may be judged to be critical either due to the importance of the task which it supports or its consequences, or because of the frequency with which the task is performed. Consideration shall be given to methods and devices that allow the user priority access to critical information.

9.1.2.43 Screen Layout

The layout of the information within a display shall be organized and provide perceptual structures to enable the user to quickly locate or predict the location of data. Where the user task involves maintaining an overall awareness of, or monitoring the state of, a dynamic environment, display screens shall support users in perceiving overall patterns and detecting significant changes.

9.1.2.44 Use of Screen Areas

Display screens should be organized into distinct logical areas. Area shall be based on an understanding of the user tasks, and the HCI manipulations necessary to control the system. Key information should be placed towards the top and left of each logical display area. Consistency in the use of screen areas, and effective mapping between screen areas and user tasks and objectives helps the user to form a consistent mental model of the HCI. This both facilitates learning, and supports users in predicting the location of information.

Information and controls required for a single task or activity shall be grouped together. As a general rule, systems should allow a minimum of three user tasks to be current at any one time, without requiring the user to store and retrieve data.

9.1.2.45 Information Density

The density of information presented on displays can have a significant impact on the ability of users to locate information, detect changes and maintain awareness. Consideration shall be given to both the overall and local information densities, where overall density refers to the amount of information on the entire screen area, and local density refers to how tightly packed the screen is within individual sub-areas of a display

9.1.2.46 Density of Alphanumeric Displays

For alphanumeric displays, the density of information on the display shall be calculated using the procedure described in Tullis (1990).

9.1.2.47 Density of Non-Alphanumeric Displays

Where the ability of users to rapidly locate information on non-alphanumeric displays is critical to operational effectiveness, the Design Authority shall ensure that the density of information, and the manner in which it is presented, supports this requirement.

9.1.2.48 Information Filtering

Where displays contain potentially large amounts of information, consideration shall be given to providing users with facilities to manage the amount and types of information displayed at any time. This can, for example, be achieved by providing controls allowing the user to filter a display according to relevant task dimensions (such as hostility, environment or time).

The ability to quickly reduce screen areas to a minimal size (such as in iconizing windows) should be considered. Where information is organized into individually controllable screen areas (such as forms or windows), providing facilities to enable users to change the size of a display area to suit overall task requirements assists users in effectively managing the amount of information displayed.

9.1.2.49 Summary Views

Where large amounts of information are potentially available to users, consideration should be given to providing a high level summary view of data. Users should be able to request more detailed information on specific items of interest as required. Summary views assist users in developing and maintaining situation awareness, while providing access to more detailed data when required.

9.1.2.50 Alternate Views

Consideration should be given to the provision of alternate views. Providing alternate views of data is often appropriate in supporting the range of user tasks, or the range of users of a system. (An example would be using Plan Position Indicator (PPI) displays to represent the tactical situation at a particular point in time, and providing waterfall-type displays to support tasks requiring time-ordered information.) If alternate views are appropriate, they should be selectable to allow the user to chose the view best suited to their current tasks. Where alternate views are provided, all of the information necessary to perform a single activity should be available within any single view.

Where information filters, summary views, or alternate views of data are provided, critical information shall be brought to the user's attention when and where it is necessary.

9.1.2.51 Use of Windows

This clause discusses the use of windows as a means of organizing the display screen to support usability. The discussion is concerned with the use of windows to support user tasks, rather than with windowing technology as such: the focus is therefore on user purposes, tasks and activities, rather than on display management considerations. Windowed displays provide two basic capabilities:

a. The ability to use a restricted screen area to work on a much larger area of data.
b. The ability to organize the screen into a number of discrete activities.

Windows provide a flexible means of supporting a user performing multiple tasks on the same screen. The visual separation of windows supports the conceptual distinction between tasks, while the physical surrounds of the display can provide a boundary on higher level or longer term task or role objectives.

General requirements for the use of windows are:

c. the boundaries of each window shall be visually distinct;
d. controls affecting the dimension and position of each window shall be dedicated to that window;
e. the status of each window should be clearly indicated (i.e. open/closed, active/inactive);
f. the data displayed within each window should be clearly identified and related to a single user objective or set of related objectives;
g. Windows which have special properties or behave in special ways shall be clearly distinguished visually.

9.1.2.52 Use of Windows in Military Systems

A considerable amount of research has been devoted to optimizing windows for office environments. In considering the application of window systems to military environments, awareness and consideration of the characteristics of the intended user population, tasks and operating conditions is vital and would need to be evaluated on early prototypes during the design process. Military operations can differ significantly from office tasks in two fundamental characteristics:

a. In office environments, individual display units are typically only used by a single person at one time. In military environments, display units are often used by more than one person. The advantage of individual customization of windows to suit an individuals task may therefore not be appropriate for many military applications.

b. Military tasks are often highly structured and proceduralized. It will often be necessary to constrain the extent to which users are given flexibility over the use of windows.

Considerations to be addressed for development of a windows-based interface are:

c. Windows should bear a clear and direct relationship to tasks or objects which are conceptually distinct in the user's internal model of the Task domain.

d. Windows containing safety-critical information or actions shall be clearly identified as having a special status. Special restrictions on user interaction with such windows may strengthen the perception that they have a special status.

e. If the system allows a window containing data to which a user requires rapid access to be hidden, the user should be able to bring that window to the front of the screen in an active state, with a single keystroke where possible.

f. If more than one user shares the same display, consideration shall be given to the impact which the provision of facilities to customize the display to personal preferences or priorities may have on other users of the same display screen.

g. If a task is highly structured, proceduralized, or imposes other constraints on the way a user performs the task, Windows supporting that task shall reflect the structured nature and constraints of the task.

h. The workload imposed through users being required to organize the display area should be minimized. The extra effort of manipulating windows can be a distraction from the task in hand, especially if a task requires information to be held in memory.

i. Dialogue activities should be clearly associated with the window to which they relate.

j. When interacting with a system, input devices (for example, a keyboard) shall only affect and provide feedback within the active window.

k. The design of window based interaction should provide facilities to enable effective management of the screen.

l. Each window shall be given a unique identifier.

m. The window currently at the centre of focus for the control devices shall be indicated as currently active. Any system process which reports back through another window shall not interrupt any interaction, except where an error or alarm message occurs.

9.1.2.53 Paging Scrolling and Panning

Facilities to page, scroll or plan through data shall be applied consistently throughout an HCI. The implementation of these facilities shall be user-centred and the resulting visual effect shall be consistent with conventional stereotypes and user expectations. If the user initiates a scroll, pan or page in one direction, the displayed data should move in the opposite direction.

In all cases, the visual appearance of the system shall clearly indicate the part of the overall data which is currently being viewed. The display shall also indicate the amount of data in each direction which is not being viewed. Where information within the system is organized

into local 'pages', pages shall be numbered. Both the number of the page currently on display and the number of pages in each direction shall be explicitly presented to the user.

9.1.2.54 Display Formats

The format in which information is presented shall be appropriate to the nature of the data and the user tasks supported. Common formats include:

a. structured data fields;
b. free text fields;
c. forms;
d. tables;
e. graphical

9.1.2.55 Structured Data Fields

Structured data fields are designed to support specific data items. The visual appearance of a field should indicate the format required (unless the format is apparent from the task context). Structured data fields should normally have an associated label. The appearance of field labels shall be such that they are not confused with data fields.

Data fields which allow user editing shall be visually distinct from non-editable data fields. Structured data fields should support the editing process and should not require users to enter characters which are predictable from the field format (such as leading or trailing zeroes, or decimal points). On completion of an edit, structured data fields shall be validated against the expected format prior to the data being accepted by the system.

9.1.2.56 Free Text Fields

Impose minimum constraints on the format in which data is entered or displayed. They can minimize the need for training or familiarization by making use of everyday language. Disadvantages of free text fields include:

a. the time required to locate, read and assimilate data can be significant for complex information structures;
b. locating and reading data can suffer interruptions from other tasks;
c. it is difficult to provide an overview of the content of the message;
d. there is limited capability to organize the content of messages to support scanning or location of related items (although highly stylized military message structures, while requiring significant familiarity, can help overcome this difficulty);
e. they can require considerable display area;
f. it can be difficult to provide the user with facilities to perform processing or analysis of the content of the message.

9.1.2.57 Forms

Provide a suitable means of grouping together data fields and controls related to a specific user task within a single unit. A form should normally be organized to contain all the information and control facilities required to perform a single task, or group of related tasks. The layout of fields within a form should follow the sequence of operations involved in performing a task. Where appropriate, fields should be organized into sub-groups within a form. Multiple instances of a standard form may be used where the same task is required to be carried out on different sets of data or real world objects.

9.1.2.58 Tables

Provide a well structured and ordered presentation of data. Consistent location allows users to quickly locate data, and supports the user in comparing data from different objects.

Tables can reduce the area required to display large amounts of text or numeric data, by using a highly structured format with a single set of field labels. Tables shall be designed such that columns of data are clearly distinct, while ensuring visual association between data within any row.

Users should normally be provided with facilities to alter the basis by which data in a table is ordered to support varying task objectives. For example, a table associated with a radar-type display might allow the user to choose to order data in the table by range, bearing or hostility.

The visual appearance of a table, or the section of a table which is currently on display, should only change as a result of an explicit user request. Where new data is added to a table, the location shall be appropriate to the nature of the data and to the user's task. It may often be appropriate for new data to be sorted to the correct logical position. Adding new data to the top or bottom of a table can be relatively easy to implement, but may be inconsistent with user task requirements.

Tables should provide a visual aid to horizontal scanning by either grouping rows into blocks of three or four, by introducing a graphical effect such as boxes or lines, or by introducing colour grouping. If columns of numeric data are involved, they should be justified on the decimal point. If phone numbers or other standard ordered number sequences are involved, they should be justified around a consistent point (such as the end of the STD).

Lists using compound numbers should show the complete number and not be truncated to the field size.

Disadvantages of tabular formats include:

a. detail can be easily missed;
b. irregularities in data can be hidden by the strong visual similarities arising from the highly structured presentation;
c. the highly ordered structure limits the ability to present information relating to a wider context.

9.1.2.59 Graphical Format

Considerations relating to the use of graphical formats are described from 9.1.3.2

9.1.2.60 Information Coding

Information coding refers to the use of a variety of techniques to carry additional information about a data item. Appropriate use of information coding techniques can assist users in locating data, identifying relationships and adopting appropriate display monitoring strategies. Effective codes allow users to selectively attend to specific dimensions of a displayed item.

In all cases, the Design Authority shall be responsible for ensuring that information coding techniques are applied effectively. Where combinations of related coding techniques are used on a single display, the extent of training necessary to ensure reliable user performance, and the degree of reliability of the coding techniques adopted shall be established through user testing. An example of the use of combined codes on a single display is modern Plan Position Indicator displays. A number of items of information can be conveyed using a suitable combination of non-textual coding techniques: the location of an object on the display indicates its relative position in the world (typically distance or range and bearing from the source), while the geometric shape may indicate the type of platform and its colour may indicate hostility. Brightness can indicate whether the object is currently being reported on. Blink coding can also be used to indicate objects which are of particular significance.

Effective information coding techniques for use in display design include:

a. spatial coding;
b. size and shape coding;
c. colour coding;
d. string length coding;
e. coding by type size and style;
f. blink coding;
g. luminance coding.

9.1.2.61 Spatial Coding

Information coding refers to the use of a variety of techniques to carry additional information about a data item. Appropriate use of information coding techniques can assist users in locating data, identifying relationships and adopting appropriate display monitoring strategies. Effective codes allow users to selectively attend to specific dimensions of a displayed item.

In all cases, the Design Authority shall be responsible for ensuring that information coding techniques are applied effectively. Where combinations of related coding techniques are used on a single display, the extent of training necessary to ensure reliable user performance, and the degree of reliability of the coding techniques adopted shall be established through user testing. An example of the use of combined codes on a single display is modern Plan Position Indicator displays. A number of items of information can be conveyed using a suitable combination of non-textual coding techniques: the location of an object on the display indicates its relative position in the world (typically distance or range and bearing from the source), while the geometric shape may indicate the type of platform and its colour may indicate hostility. Brightness can indicate whether the object is currently being reported on. Blink coding can also be used to indicate objects which are of particular significance.

Effective information coding techniques for use in display design include:

a. spatial coding;
b. size and shape coding;
c. colour coding;
d. string length coding;
e. coding by type size and style;
f. blink coding;
g. luminance coding.

9.1.2.62 Shape and Size Coding

The geometric size and shape of an object can be a powerful means of conveying information about the object. The number of geometric shapes which can be used for coding purposes depends to a large degree on the extent to which the symbol 'looks like', the item or function which it represents. A distinction should be made between icons and other graphic symbols. Well designed icons convey a large amount of information about the function they represent. They therefore impose minimal requirements on users to learn the associated meaning. Consequently, the number of icons which can be used effectively in an HCI is potentially very large.

Graphic symbols generally convey less information than icons and place a greater requirement on users to learn the associated meanings. Where geometric shape coding is used, and each symbol is required to be identified without reference to any other, the number of symbols in the set should normally not exceed 15. This limit may be exceeded where symbols fall into clearly distinct groups, and where the groups can be determined from some aspect of the symbols shape, or where relative discrimination only is necessary. The Design Authority shall proved evidence, based on user trials, of the amount of training necessary for representative users to be able to accurately and reliably discriminate and identify each symbol in the set.

9.1.2.63 Colour Coding

The three psychological attributes of colour are hue, saturation and brightness. Colour can present a more attractive display to the user, and also decreases clutter by providing a compact means of coding. The use of colour can improve comprehensibility by providing a readily appreciable way of distinguishing between different features and different classes of information. However the advantage of colour coding over shape coding diminishes with practice, even at higher levels of display density, colour coding being less marked as density increased. In a digital chart for example, where many colours are likely to be on display at any one time, colour can effect the task of searching in two distinct ways; firstly by directing attention towards the target, and secondly, by making non-target items more or less distracting.

In allocating colour coding values to specific classes of information, consideration shall be given to trade-offs between the speed increase due to object information category being of a known colour, and the speed decrease as the number of colours used in the display increases, particularly where the colours of the non-targets/background are heterogeneous or similar to the target colour. The function of colour in visual search can also differ depending on whether the search is taking place on a global or a local level. At a global level, colour can 'pull out' certain features of a display supporting selective attention. At a local level, colour difference can facilitate the discrimination between features which are in close proximity.

Consideration shall be given to high edge contrast, continuity of contour and homogeneity in the presentation of graphics, as these are particularly important characteristics of a 'good figure'. Colour can give these characteristics to an otherwise complex structure or haphazard configuration, acting as a clarifying or unifying element for same-coloured features, whilst increasing the visual separability of different-coloured features.

NOTE: For map graphics and electronic charts the display requires a maximum of 22 colours, including 6 different blues for depth shading. Refer to Reference [348]for further information.

9.1.2.64 String Length

Digit string length often gives an indication of information category. For example, digit strings on charts are normally between 1 and 4 figures long. Speed information is usually 1-2 figures long, depth is 2-3 figures long, bearing is 3 figures long and time is 4 figures long.

9.1.2.65 Coding by Type Size and Style

Consideration shall be given to the use of styles, fonts and font size to code the data being presented. Different classes of information may be written in different styles or fonts. Different sizes of print may also be used. As an example, spot depths on a map display are often presented in relatively small print.

9.1.2.66 Blink Coding

Consideration shall be given to the use of blink coding to attract the user's attention to the value or condition of the data. This technique should be reserved to those instances where the change of state or value of the data being presented is an action initiating event or an indication of an emergency condition, or where the user requires to be reminded about the existence of an object. When used, the initiation of the appropriate action or acknowledgement of an emergency condition shall suppress the blink coding.
Where blink coding is to be used the size of the display area which blinks should be kept relatively small. The blink rate should be between 2 Hz and 4 Hz with 2 to 3 Hz preferred and a minimum on time of 50 ms at an on/off ratio of 50%. The selected blink rate should avoid any interference with the display devices scan rate. If textural data is to be read for confirmation or additional information, then the blink area should be associated with, and restated to, a related or adjacent symbol.

No more than two different rates should be used to indicate different coded information. If two blink codes are used then their rates should be approximately four per second and one per second, where the faster is used for critical information.

9.1.2.67 Luminance Coding

The brightness of objects can be used to convey simple categorical information. Where all objects are displayed in a single colour, up to three levels of luminance may be used. On colour displays, due to the co-variance of brightness and colour, a maximum of two levels luminance codes are recommended.

9.1.2.68 Textual Information

9.1.2.69 Continuous Text

Information presented on a display should match the user's tasks and be in a directly usable format. Standard conventions should be used for sentence and paragraph structure. Paragraphs should be separated by at least one line and use conventional or formalized punctuation. Text cursors shall be capable of being positioned at any location indicated by the user, including before or after any character.

a. The main topic of the text should appear at the beginning of the sentence.

b. information required to support a task or activity should be grouped together. Any grouped data should be arranged consistently throughout the system. The presentation of this textual information should be structured to remove the need for reliance on user memory.

c. A paragraph should be short and contain a single idea.

d. If non-connected textural information is to be presented, consideration should be given to applying logical groupings. These groupings can be made by sequence, frequency, functionality, importance and alphabetically.

9.1.3 Emphasising Text

Where text or parts of texts require emphasising, for example because they represent critical information, techniques for emphasising the appearance of the text should be considered.

Methods which may be used to draw attention to key points in text include:

a. the use of size;
b. the use of bold characters;
c. the use of extra spacing on either side of the word;
d. by preceding or enclosing the text with special symbol (bullets, arrows etc);
e. by its position relative to other key display elements.

Where techniques, such as the use of capitals, underlining, text and background colour, flashing and reverse video are to be used, consideration shall be given to the adverse effects caused by each method on the task efficiency. Table 9.1:3summarizes the techniques and their respective considerations.

TECHNIQUE	CONSIDERATIONS
Capitals	Reduces legibility of text. Should only be used for headlines key phrases or acronyms. Leading capitals should be used for the first character in each word in a title or label.
Underlining	Reduces legibility if text is closely spaced. Should only be used for headlines or key phrases.
Text and background colour	See general considerations for colour.
Flashing	Can impair legibility of text. Blink Coding

Table 9.1:3: Summary of Techniques for Emphasizing Text

If information is to be entered from paper forms, then the interface should mirror the paper layout. This can greatly speed up the data entry task.

If illustrations are to be used in association with the text, they should be placed close to or adjacent to the corresponding text.

9.1.3.1 Instructions

The presentation of instructions should conform to the guidance and consideration of any text presentation in that they should be simple, clear, concise, unambiguous, ordered and structured. Additionally, the sequence of the instruction should follow the sequence of the task. (For example: 'First select the colour of object, then select the mode' and not 'Select the mode of operation required' after 'select the colour of object').

9.1.3.2 Graphical Information

Graphical display formats, (such as bar charts, flow charts, plan position indicator (PPI) or mimic diagrams) can be effective in assisting users to identify relationships between data items. Graphical displays can exhibit different levels of abstraction. Consideration shall be given to the level of abstraction that best supports the user's task. There is evidence that the task performance for novices and experienced users during training is directly related to the quality of the schematic representations of the system.

Disadvantages associated with graphical formats include:

a. training can be necessary to ensure that users understand the symbolic content of the presentation;

b. the user requires a high degree of familiarity and understanding of the system or environment being represented.

The three main types of graphical information are:

Representative. Representative graphics include plan position indicator (PPI) displays, mimic displays or simple representations of a system. This format is an obvious choice for applications such as simulators and trainers. It also finds widespread use in remote monitoring stations and control rooms.

Diagrammatic. Diagrammatic graphics, such as bar charts, flow charts or mimic diagrams, can allow information on spatial and temporal relationships to be displayed in a way that maps closely on to the way in which users mentally represent and think about the data. They can also be effective in assisting users to identify relationships between data items. There is evidence that the task performance for novices and experienced users during training is directly related to the quality of the schematic representations of the system.

Iconic. Iconic graphics are normally used in relation to diagrammatic or representative graphics to allow the user to assimilate information about the graphic, whilst not overwhelming the graphic with unnecessary detail.

NOTE: The above descriptions of graphics are not mutually exclusive as diagrammatic icons, representative icons, diagrammatic representations and representative diagrams can be produced. The distinction made above is to allow issues relating to each type to be discussed.

9.1.3.3 General Considerations

9.1.3.4 Drawing Speed and Order

The principal methods of implementing graphics in computer systems are Bitmap and Vector images.

Each of these technical methods can present the user with problems:

a. Bitmap images can provide near picture quality images on the display, but due to longer load times, can cause long response times.

b. Vector images can be easier to manipulate in software. However, complex images can lead to the user being aware of the drawing order and of window repair and redraw.

The speed at which graphical items are drawn, and the rate at which the items are updated, can both affect the effectiveness of graphical displays. When users can detect the speed at which items are drawn, the eye tends to follow the drawing order and end on the last drawn object. This is sometimes referred to as the 'dynamic eye fall location'. Consideration shall be given to the impact this effect may have on the use of a display. For example, in vector image displays, advantage can be taken of this effect to guide the eye to significant locations on the screen.

Consideration shall also be given to the rate at which graphics and data items are updated. Updates need to be sufficiently fast to ensure that displayed data is as current as task requirements demand. Unsuitable update rates can impair the user's ability to extract information from the object, and can be distracting from the task.

9.1.3.5 Representative Graphics

Representative imagery can be considered as any image reproduced on the display device which is intended to represent a real world object. Such graphic images would include representation of control panels, maps, and physical system layouts.

9.1.3.6 General Considerations

Consideration shall be given to the user's perception of the relative importance of displayed objects. Developing an appropriate visual hierarchy allows the user to rapidly scan, interpret and assimilate the large amounts of data. The extent to which one area has visual precedence over another depends greatly on the contrast of the edge. In maps, for example, the level of edge sharpness can create a visual hierarchy for area objects within a map.

9.1.3.7 Special Consideration for Digital Map and Chart Imagery

Consideration shall be given to the presentation of digital map and chart imagery to the user, including the apportioning of relative emphasis to the elements of subject matter being presented. Generally, stimuli perceived as ordered are interpreted as more meaningful.

For the present resolution of even high quality screens, the size of symbols must be approximately 130% of the paper chart symbols. See Reference [348]for further information.

Consideration shall be given to the wide range of potential users of digital maps or charts. Users may have a wide and varied range of tasks which may require execution at various times. Consideration shall be given to the coding requirements for individual tasks, recognizing that an optimal presentation for one task will not necessarily be optimal for another.

9.1.3.8 Diagrammatic Graphics

Diagrammatic imagery can be considered to be any image reproduced on the display device using synthetic graphics which is not intended to represent a real world object. Consideration shall be given to the pictorial content of any intended imagery, and in particular, the requirements for primary and enabling information.

Primary information in a graphical image refers to the information that is required by the user to undertake their task. Enabling information in a graphical image refers to the information that is required by the user to put the primary information into context.

An example would be a diagram of a hydraulic system where the state of a valve may be considered to be the Primary information required by the user while the line that represents the connectivity of the system is the secondary information needed to enable the user to put the valve in context.

Diagrammatic images should provide sufficient primary and enabling information to support the system tasks. Where pictorial imagery is used, graphical conventions shall be applied consistently throughout the system. The pictorial representation of real world objects should give it solid forms. Single line representations should be avoided, as they are less discriminable.

Where images are direct representations of physical control devices, the appearance, operation and dynamics of the representation should be consistent with the ergonomic principles contained within this Standard.

9.1.3.9 Supporting Data

Where user tasks may require more detailed specific information about a diagrammatic object, supporting data may be presented in conjunction with the intended imagery in the same approximate location (spatial coded) of the graphical object. In this case, the display of information should be under user control.

Where tasks involve detailed manipulation or interaction with data about objects that are represented graphically, supporting information and controls may be presented in a secondary display area. Where two displays simultaneously show data relating to one object, interaction with the data underlying the object on one display should be reflected on to the other.

9.1.3.10 Iconic Graphics

An icon is a small discrete graphical symbol that is identifiable and meaningful to the user. Icons provide an effective means of conveying relatively complex information using a small amount of display space. Icons that are appropriately designed and applied can also support and increase the speed and efficiency of interactive behaviour. It is useful to distinguish between five main approaches to the design and use of icons:

a. modification of a repetitive image;
b. use of culture stereotypes;
c. action symbol;
d. abstract symbols;
e. object-based.

These are represented in Table 9.1:4.

Style	Example		
Modification of Repetitive Image	Select Data	Copy Data	Delete
Culture Stereotype	Super	Music	Spell check
Action Symbol	Move Object	Fill	
Abstract	Undo	Object	
Object Based	Alarm	Save	Object

Table 9.1:4: Examples of Icon Styles

Designing effective icons requires considerable skills and experience and should not be underestimated. For icons to be effective, it is essential that a strong relationship exists between icon and meaning. The Design Authority shall provide evidence that representative users can readily associate the icon with the appropriate meaning.

Consideration shall be given to the selection of the combination of icon types. Whilst it is acceptable to mix the types within one system, application of icons to functions shall be clear to the user and consistent with each other.

Icons shall be recognizable in and out of their context of operation. Where they are used as the primary means of actioning a function, icons should be presented with an associated label. Where icons are presented as a shortcut method, labelling is not a necessity.

Icons should not be used on low resolution display devices as the ability to create recognisable images is greatly reduced.

9.1.3.11 Abstract Geometric Icons

A symbol set should include a wide variety of shapes, where each symbol subtends a minimum of 20 minutes of arc at the eye when viewed from the user's normal operating position and the stroke width-to-height ratio is 1:8 to 1:10.

9.1.3.12 Pointing Cursor Icons

Where an HCI requires the user to indicate positions or make selections using a continuous pointing device (such as tracker ball, light pen or mouse, etc), consideration shall be given to the design of the pointing cursor. The pointing cursor refers to the representation on the display screen of the current position indicated by the pointing device. Pointing cursors shall comply with the legibility and recognition requirements of standard icons.

Pointing cursors, together with cursors themselves, shall be easily seen throughout their movement across the display device. The cursor can be made invisible if no movement is present and keyboard entry is in progress. To indicate to the user that the system is busy, the pointing cursor should either flash at 3 Hz or change form to a time-out icon.

The presentation or dynamic behaviour of the cursor shall not distract from other user tasks.

9.1.3.13 Use of Colour

Structure and organization emphasizes areas or particular types of information as follows:

a. by increasing the quantity of information which can be represented;
b. by supporting users in selectively attending to or searching for specific categories of information;
c. by improving the realism of a display;
d. by increasing user acceptance of a display.

The use and specification of colour shall comply with the guidance contained within this Standard. Users typically express preferences for colour displays, although it is not always possible to detect performance differences directly arising from the use of colour.

In general, colour should be used conservatively and should not distract from the user's task.

Displays shall be designed and validated for monochrome viewing. This means that all the information provided by the system shall remain available to the user in the same visual location if the information were to be displayed in monochrome. Consideration should then be given to the use of colour to aid the formatting of the display and enhance user performance. Colour formatting should only be considered as a performance enhancement measure.

Consideration should be given to the use of colour to emphasize the logical organization of information displayed to the user. For example, subtle use of colour can assist in providing structure to tables of data, and can assist the user in locating selected rows, columns or cells.

Consideration should be given to the use of colour to support user interaction with displays comprising high information densities. If the task requires the potential display of large amounts of data concurrently, then colour coding should be considered to support the user in locating specific types of data.

The use of colour on any display shall be consistent throughout the system. The following rules should be used as guidance during the design process:

a. The number of background and foreground colour combinations shall be limited to a set of less than 24, on an HCI.

b. Saturated, high luminance colours should be used sparingly. They can be used on or between dull background tones to emphasize aspects and features.

c. Large areas, background or base-colours should be unsaturated and of sufficiently low luminance to provide adequate luminance contrast with foreground colours. The background colour should be maintained across all related areas of the display.

d. Large differences in hue are most appropriate for distinguishing a small number of unrelated categories of information. This is because hue can be readily segregated into categories which can be relatively easily named (i.e. 'Red', 'Green'). Saturation and luminance are less appropriate for unrelated categories.

The use of colour on any display shall conform to existing colour coding in the user's task(s), where these exist, and should convey traditional expected meanings. Consideration should be given to the use of colour in non-standard lighting conditions. If night viewing is required, the background colour should not be brighter than the foreground colours.

9.1.3.14 Dynamic Information

The appropriate use of graphical display formats and dynamic techniques to present changing information can greatly increase the effectiveness of the user interaction with the system.

The selection of static or dynamic displays should be representative of the nature of the user's task. Dynamic displays should only be used to monitor or present information of a dynamic nature. Where dynamic displays are to be used, consideration shall be given to presentation devices in order to provide a degree of permanence to the displayed data.

Where dynamic information is displayed, the user's extra work load should be supported by continuously tracking and monitoring the changing state of the display. Consideration shall be given to the use of information clarifying techniques such as track trails, directional indicators on digital readouts and data freeze/snapshot facilities.

9.1.3.15 Physical Characteristics of Displays

Many physical factors influence the effectiveness of visual displays, including viewing position, the size of information, contrast, and the quality of the displayed image. This Section provides guidance on these factors, in relation to the physical design of displays. Though most principles apply to various display media, issues concerning specific media are included. NOTE: For completeness, guidance on physical aspects of scales is included in Section 9.1.1.8.

9.1.3.16 Viewing Position

The optimum position for a display is governed by perceptual and physical considerations. The physical issues are related to the abilities and limitations of the visual system. The optimum position in the field of view is related to the position of the image on the retina, while the optimum viewing distance is predominantly influenced by the size of the retinal image, governed by the optics of the eye. However, other practical considerations and constraints may also affect the design position, such as anthropometric reach and clearance (see Part HFE3).

9.1.4 Field of view

Displays should be positioned according to the viewer's normal field of view.

NOTE: The most important information may be that of the real world, and hence additional displays should be positioned to avoid obscuring this view.

Figure 9.1:8 shows the optimum and maximum locations for displays for three operating scenarios: (A) if only eye movement is possible, (B) if only head movement is possible and, (C) if both head and eye movements are possible. Integrating these recommendations, based on visual acuity, comfort and minimal obstruction, the optimum location for displays is within the central 30° of the viewer's binocular field of view, up to 15° below the 'normal' line of sight. (The normal line of sight is often referred to as between 10° and 15° below the Frankfort plane. However, recent research indicates that it may be as much as 30° below.) The designer should avoid positioning displays beyond 40° above and 20° below the viewer's line of sight, and beyond 30° either side, depending on the viewing distance.

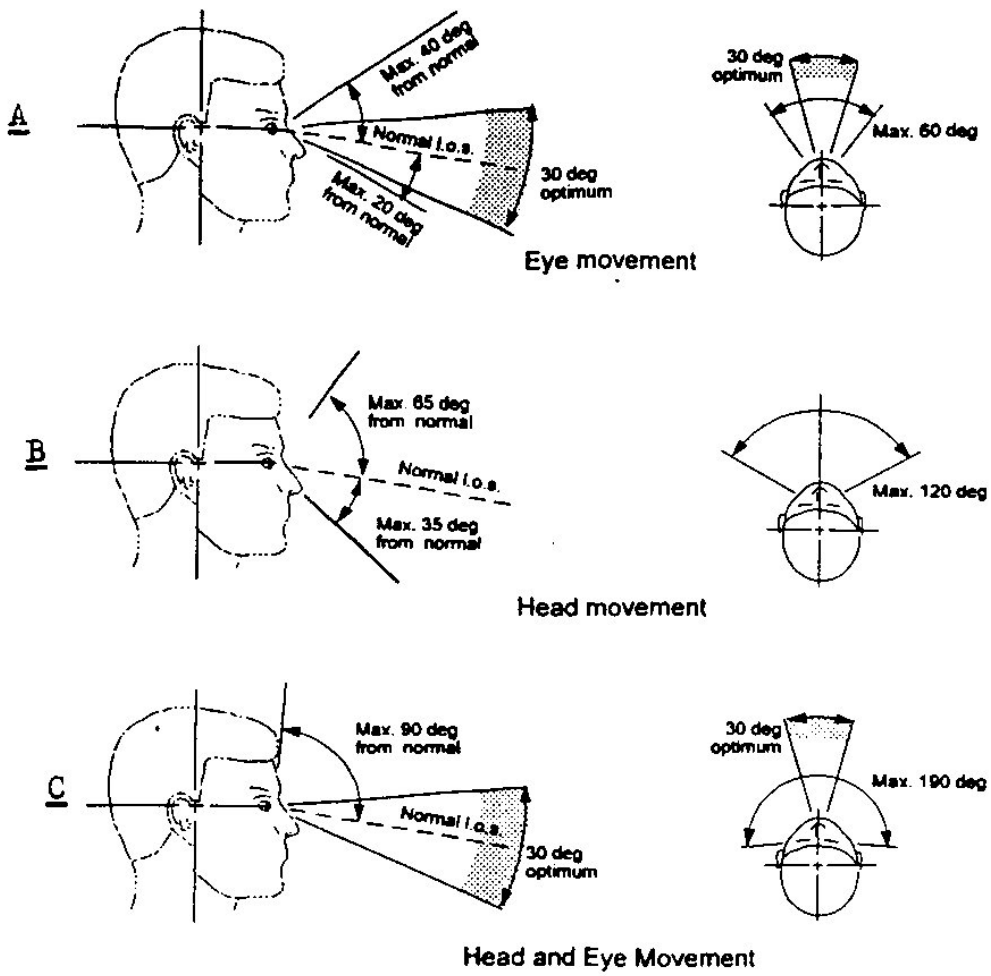

Figure 9.1:8: Optimum and Maximum Positions for Displays in the Visual Field, Allowing for Eye Movement, Head Movement and Eye and Head Movement (LOS = Line of Sight)

Generally, important information should be displayed in the centre of the visual field. Def Stan 00-25 (Part 25) shows that the field of view for each eye is an irregular ellipse biased towards the horizontal periphery. The preferred viewing positions for types of display information are determined by the viewer's visual perceptual capacity with the integration of the two monocular fields of view. However, the position of the field in which displays should be positioned changes if the head and eyes move.

The following characteristics of the displayed information, and the environmental requirements however, should also be taken into consideration:

a. Visual fields for accurate perception of yellow and blue information are up to 25% larger (up to 60° within the horizontal field of view) than for red which is 25% larger than for green (up to 30° within the horizontal field of view).

b. Perception of red information is about 75% slower than other information in peripheral vision.

c. Perception of movement increases with the distance from the fovea.

d. Peripheral vision is poor for detecting low contrast or small objects.

e. Over-reliance on representational displays can cause psychological entrapment whereby operators neglect real world information.

f. Clothing, optical equipment and safety devices can reduce fields of view (e.g. binoculars, NBC headgear, HMDs).

g. Many types of display become difficult to read if their surface is more than 40° from the perpendicular of the normal line of sight (e.g. anisotropic LCD FPDs).

9.1.4.1 Distance

The optimum viewing distance depends on the apparent size of display information, usually expressed in terms of the angle it subtends at the eye, e.g. 3.5 mm characters need to be at about 600 mm to subtend 20 minutes of arc. The resting focal distance, sometimes referred to as 'tonic accommodation' varies between individuals but for many it is about 1.7 dioptres (about 590 mm). Therefore typical recommendations for viewing distances for CRT displays vary between 600 mm and 750 mm, depending on the size of the displayed information.

The following should also be taken into consideration:

a. If controls associated with the display are adjacent to the displays, the distance should be no greater than 635 mm (well within functional reach).
b. Visual acuity when trying to focus at infinity is best between about 5 m and 12 m away from the eye.
c. For very close displays blue information can be focused nearer than red.
d. The eye becomes nearsighted in dim light (e.g. from twilight onwards).
e. Other physical constraints may exist. For example, if clearance is required for ejector seats, the viewing distance may have to be at least 760 mm, in which case the size of the displayed information should be taken into account.
f. Less susceptibility to veiling reflections means many FPDs can be placed lower in the visual field and nearer to the viewer (closer to the normal reading distance of documents).

9.1.4.2 Viewing position: design checklist

a. Place displays showing important information within 15° from the centre of the normal field of view (see Figure 9.1:8).
b. Place CRT displays at least 500-700 mm from the viewer.
c. Displays designed for dark viewing should allow for variation in accommodation between 1 and 2.25 dioptres.
d. Increase the contrast of information on displays in the periphery of the field of view by up to five times.
e. Do not place displays requiring accurate colour perception beyond 30° from the centre of the normal field of view.
f. Red should not be used for information that requires very close viewing.
g. Place representational displays (such as primary flight displays) as close as possible to real world information, e.g. near the windscreen or using head-up displays (HUDs).

h. For transposed image displays (e.g. HUDs) display information should be presented at a focal distance close to (preferably just in front of) the background information, e.g. 2.5-5 m for land vehicles, 10-12 m for aircraft (though background information may be much farther away, the focal distance for comfortable visual accommodation at 'infinity' tends to approximate to around this figure).
i. Avoid designing large movements in displays of secondary importance in the periphery of the field of view.
j. Incorporate movement into warning displays requiring attention in the periphery of the field of view.
k. Position displays such that their surface is within 40° of the perpendicular to the viewer's normal line of sight for glass fronted displays and FPDs and within 45° for printed or mechanical displays.

9.1.4.3 Size of Displayed Information

The optimum size of a displayed character depends on the viewing distance, ambient illumination, the importance of the text, numerals or symbols, and the display medium (for example, objects on touch screen control-displays are restricted by the need to designate the displayed image as a control area, see Def Stan 00-25 (Part HFE6).

9.1.4.4 Character height

The minimum size which is recommended for reliable general readability is 16 min of arc (about 3.25 mm at a viewing distance of 700 mm), although 20 min of arc is preferred for most CRTs and FPDs (see below).

9.1.4.5 Printed characters

Table 9.1:5 below is a general guide for printed characters assuming a luminance above 3.5 cdm^2 and a perpendicular line of sight to the display surface.

VIEWING DISTANCE (m)	CHARACTER HEIGHT (mm)
> 0.5	2.3
0.5 - 1	4.7
1-2	9.4
2-4	19.0
4-8	38.0

Table 9.1:5: Character Size and Viewing Distance

Table 9.1:6 below is a guide assuming a viewing distance of 600 mm. For any other distance multiply the values below by the desired distance, divided by 600, e.g. for non-critical information at 710 mm with luminance above 3.5 cd/m^2, the character height should be between

$$\frac{710 \times 1.25}{600} - \frac{710 \times 4.25}{600} \text{ mm}$$

	HEIGHT	
PURPOSE	**BELOW 3.5 cd/m^2**	**Above 3.5 cd/m^2**
Non-critical information (e.g. familiarization markings, routine instructions)	1.25-4.25 mm	1.25-4.25 mm
Critical information in fixed positions (e.g. emergency instructions, fixed scale numerals)	3.50-6.75 mm	2.10-4.25 mm
Critical information in variable positions (e.g. numerals on moving scales/counters)	4.25-86.75 mm	2.50-4.25 mm

Table 9.1:6: Character Size and Luminance

9.1.4.6 CRT characters

Character heights from 20 to 22 mins of arc are preferred for most tasks. The minimum character height should be 16 mins of arc. Most CRT displays produce dot matrix images for which a matrix of 5 x 7 is the minimum that is required to display legible numerals or uppercase letters. For more complex lowercase letters or where accuracy is important, a 7 x 9 matrix is required (see Figure 9.1:9). With dot matrix technology, it is important that the character shapes are recognisable and distinct. It is often difficult to distinguish such characters as U and V or 8 and B. If diacritics are used the matrix should be increased upwards by 2 pixels. Similarly, if lowercase letters with descenders are used (e.g. ‘j’) the matrix should be extended downwards by 2 pixels.

9.1.4.7 Flat Panel Display (FPD) characters

The same heights apply as for CRT display, with the following exceptions: for achromatic and monochrome FPDs the height should exceed 16 min of arc; for pseudo-monochrome and multicolour FPDs the height should exceed 20 min of arc. Character height can be expressed in terms of the number of pixels times the vertical pitch of a pixel (see Figure 9.1:9).

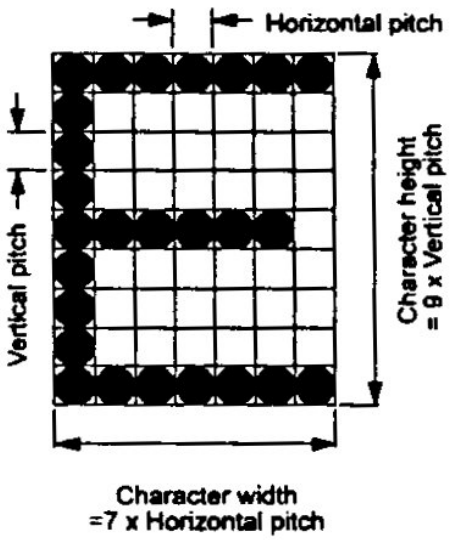

Figure 9.1:9: Height of FPD Characters

9.1.4.8 Character Width and Spacing

The optimum width of characters is dependent upon their height and case. For letters width-to-height ratios of 0.8:1 are appropriate (ratios up to 1:1 for capital letters may be preferred but yield little performance improvement). The ratio for numerals should be 0.6:1 plus one stroke width. The exceptions are for the letters 'M' and 'W' for which a width-to-height ratio of 0.8:1 is preferred and for the letter 'I' and numeral '1' which are one stroke width. The spacing between characters should be two stroke widths for most characters and a minimum of one stroke width between pairs of characters that can be proportionally spaced, e.g. between capitals 'A' and 'Y', 'L' and 'T'. The spacing between words should be at least one character width.

9.1.4.9 CRT Characters

The width-to-height ratio for CRT characters should be between 0.7:1 and 0.9:1. The spacing between characters is also important for legibility and should be no less than one pixel between horizontal characters and between the lowest descender and the highest ascender between rows. The spacing between words should be 7 pixels for non-proportional spacing and between 4 and 7 pixels for proportional spacing.

The character width-to-height ratio is the width times the horizontal pixel pitch divided by the character height. The ratio should be from 0.7:1 to 0.9:1 for optimum legibility and readability (see Figure 9.1:9). The same spacing as CRT characters should apply.

9.1.4.10 Character Stroke Width

Dark characters upon a light background (positive polarity) with a stroke width of 16-20% of the character's height yield the best performance in terms of speed and accuracy in reading. For printed positive contrast displays the ratio should be 0.125:1-0.1:1. However, irradiation in (lower resolution) CRT displays causes light characters to 'bleed' into dark backgrounds, hence the ratio for negative polarity (positive contrast) presentation should be 0.16:1-0.08:1 on emissive displays. For FPDs the stroke width to height ratio should be between 0.08:1 and 0.2:1.

9.1.4.11 Parallax

Moving pointer display scales should be designed where possible to avoid parallax by ensuring the pointer tip and scale markers are at the same depth. This could be achieved by recessing the centre of the display such that the surface of the outer part of the display containing the scale markers and numerals is at the same as the height of the pointer tip. Computer-generated displays incorporating touch screens also suffer from parallax.

Similarly, the curvature of the unit 'drums' on mechanical counters can make the printed numerals difficult to read, hence the designer should choose the typeface carefully to avoid confusion with the increased perspective at the top and bottom of each numeral.

9.1.4.12 Contrast

Information displayed must have either a higher or lower luminance contrast than the background to be legible. Luminance is described in Def Stan 00-25 Part HFE4. The contrast is the difference between the luminance of the target and background, expressed as a ratio (also described in Def Stan 00-25 Part HFE4 e.g.

$$\text{Contrast Ratio, } C_R = \frac{L_{\max}}{L_{\min}}$$

Where L_{max} and L_{min} represent the maximum and minimum luminances in cdm^{-2}, respectively, i.e. the luminances of the target and background. In general, high contrast in the detail of the display will improve performance. However, contrast should not be so high that it causes glare. There are various methods of achieving appropriate contrast such as the use of back illumination.

For non-emissive displays the contrast is determined by the differences in reflectance, the amount of incident illumination reflected from the surface of the displayed background or image. The designer should be aware that the difference in contrast also influences the perceived absolute lightness, e.g. a given grey square appears darker against a white background than a black background. A similar effect occurs with presentation of colours, e.g. white and yellow can be difficult to distinguish against a black background.

9.1.4.13 Printed Detail

Characters, pointers, scales, symbolic detail, etc should have a minimum contrast ratio of 1.5:1.

9.1.4.14 CRT Displays

CRT displays should be capable of a minimum of 35 cdm^2. Where luminance is used for coding, this should be the lower luminance, the ratio between the higher and lower luminance should be at least 1.5:1. The minimum luminance contrast of character details should be 3:1.

9.1.4.15 FPDs

FPDs can achieve very high contrast, low luminance displays without causing glare. In all cases the peak luminance for each pixel should be at least 20 cdm^2. The minimum contrast for monochromatic or achromatic tasks on displays with a lower luminance of 10 cdm^2 should be 3:1. For colour difference tasks using multicolour displays or for pseudo-monochrome displays, the minimum contrast ratio should be 1.5:1.

9.1.4.16 Transposed Image Displays

Designers of displays transposing an image onto the 'outside world' (e.g. HUDs and transposed image HMDs) clearly cannot manipulate background luminance because of task requirements, and hence adequate contrast depends on providing sufficient image luminance for the displayed information. This is especially significant for cockpit designers, where background luminances (e.g. bright sky) are very high, commonly resulting in minimum specifications for peak image luminance that are as high as possible with the given technology (typically up to 17000 cd/m^2). For such displays, active adjustment of the luminance using sensors means pilots do not have to take their hands from the primary controls. The speed of response for this type of system should be governed by the task requirements. In cockpits, for example, a fast response is likely to be necessary, while for static command positions, the speed may only need to be at a similar pace as dark adaptation.

9.1.4.17 Glare and Reflections

Glare is the discomfort or impairment of vision experienced when parts of the visual field are excessively bright in relation to the background. Types of glare and their measurement are described in Def Stan 00-25 (Part HFE4). Direct glare can make it difficult to read displays. A reduction in visibility of the display increases with the luminance of the glare and its proximity to the line of sight. Luminescent displays may in themselves constitute a source of glare if the contrast between the display and surroundings is high (e.g. status indicators in a dark cockpit). Alternatively, the glare may be a reflection, either specular (mirror-like) or diffuse (veiling), of another source, such as interior lighting, other displays, sunlight or an external event (e.g. fire, flare, etc). Incident light in veiling reflections increases the luminance of both screen and background and hence reduces the contrast ratio of the displayed information. The effect of the veiling reflection depends on the surface of the display and the display technology. Back-lit LCD screens do not suffer as much as CRTs, partly because their surface is more uniform than the uneven surface of the CRT phosphor and partly because of their back-lit operation.

9.1.4.18 Methods for Control and Minimization

Although removing or minimizing the source of the reflection is the most effective method for reducing effects, this is clearly not always possible or desirable. Similarly, moving the display to avoid the reflection may also be impractical (e.g. within a vehicle command position). A hood over the display often helps to avoid reflection upon the display and also helps to prevent the display reflecting on another surface (e.g. vehicle windscreen), but these are not always effective for the whole display. Using reflectances and colours at the workstation and in the immediate working environment is also important (see Def Stan 00-25 (Part HFE4 and part 25)).

Active adaptive luminance controls are used for suppression of direct glare from displays, and for adjusting to veiling reflections upon displays (e.g. in cockpits). However, problems arise in the positioning and number of the sensors used to accommodate shadows upon the display area. Similarly, active glare adaptation systems for operators using NVGs suppress only the red wavelengths in the cockpit displays which can cause problems for others present in the cockpit not wearing NVGs and for discrimination of luminance coding.

Another control measure for reflected glare is to use positive polarity displays where possible, since the reflections are more noticeable on the larger dark parts of the display that negative polarity screens provide.

9.1.4.19 Display surface

Many mechanical, CRT and FPD displays have a glass surface. Unless etched or otherwise optically treated, flat glass display surfaces can produce clear specular reflections from incident light that occupy a large part of the display. The convex curvature on many CRT displays, however, means that incident light from a wider field is visible as a reflection than with a flat display. Various coatings and filters may therefore be used where reflected glare cannot be eliminated by other means. Surface treatments should be in accordance with BS EN ISO 9241-7: 1998. The main types of filter that exist have certain advantages and disadvantages:

a. Mesh filters are cheap and effective but also distort the displayed image. They are difficult to keep clean and may produce distracting 'moiré' effects if close to the screen surface.

b. Neutral density filters simply reduce the amount of light passing through, rather like sunglasses. This reduces the reflections twice (in and out) and the displayed image once. Thus they also enhance the contrast. The problem is that they also have a reflective front surface and this itself can be a source of reflections.

c. Polarized filters are more effective, and expensive, and eliminate reflections from the CRT surface. However, they also suffer from external surface reflections.

d. Quarter wavelength interference filters are effective against screen reflections and surface reflections but are expensive and difficult to maintain since finger marks become highly visible.

9.1.4.20 Displayed Colour

Guidance on perception of colour and colour coding are given in Def Stan 00-25 (Part P10). This clause provides guidance on the physical presentation of colour in displays. When a task demands that the operator must discriminate or identify displayed colours using a CRT or FPD, the set of colours should conform to BS EN ISO 9241-8: 1998.

9.1.4.21 Object Size

For isolated images where accurate colour identification is required, the image should subtend at least 30 mins of arc, preferably 45 mins of arc. For small objects and characters, the height should subtend at least 20 mins of arc, and the colour contrast ratio should be greater than 1:5. The use of highly saturated blue should be avoided for objects subtending less than 2 degrees.

9.1.4.22 Background

Achromatic backgrounds (e.g. black, dark grey) optimize discrimination and identification of colours on emissive displays. Adjacent spectrally extreme colours, e.g. red and blue, are perceived to be at different depths (especially if highly saturated) and should therefore be avoided in reading tasks. Extremely achromatic objects can take on the appearance of the background colour, e.g. medium grey on red may appear cyan.

9.1.4.23 Electronic Display Characteristics

With the advance of display technology, the quality of the image presented by electronic displays has fundamentally improved. Though the quality will doubtless continue to improve there are intrinsic features of the display media that make them better or less well suited to certain applications. It is the intention here to provide an overview of the various electronic displays, to help the designer in selecting the most appropriate media. The overview includes the oldest and bulkiest technology, the cathode ray tube, and proceeds to the more recent, light and flat panel structures based on liquid crystals, gas discharge and electroluminescence. Other displays based on vacuum fluorescence and field emission arrays are also covered briefly. All displays mentioned here, apart from those based on liquid crystals, emit light and are therefore termed *active* displays. Liquid crystal devices, on the other hand, modulate ambient light, i.e. they are inherently non-emissive, and are therefore termed *passive* displays (although they might be backlit). A table is presented in the design checklist below identifying the types of display most suitable for various application domains.

9.1.4.24 Cathode Ray Tube (CRT)

The cathode ray tube (CRT) technology is almost 100 years old and is manufactured in enormous numbers, with over 100 million units produced annually world-wide. The CRT-based displays range from 0.5" screens for the Head Mounted Displays (HMDs) for pilots in military fighter aircraft to over 42" screens for high definition television (HDTV) entertainment systems. CRTs with 3000 x 3000 pixels are available for Computer-aided Design (CAD) systems. CRTs employ electron emitting guns, phosphors (inorganic luminescent materials that emit visible light when energized by electrons, ultra-violet light, and other forms of energy), masks and deflection yokes. CRTs have a proven and reliable track record for numerous functions, and with ever greater optimization they will continue to be useful for many applications.

9.1.4.25 Liquid Crystal Displays (LCDs)

Unlike most other displays, LCDs modulate ambient light and are inherently low in power consumption. Most early LCDs were reflective types based on twisted nematic (thread-like) materials. With a field applied, the liquid crystal material aligns, and light is transmitted leading to the formation of an image. These twisted nematic materials suffer from a very low viewing angle and slow speed of response leading to flicker as well as poor temperature performance. Occasionally, a backlight was employed to render the display visible in low ambient light.

The early problems of the LCDs have been overcome to a large degree by more advanced materials and improved driving techniques. Colour has been added by providing individual organic based filter screens printed under each pixel. Most recent LCDs are based on super twisted nematic (STN), active matrix drives employing thin film transistor (TFT) and ferroelectrics (with memory), amongst others. Full colour displays operating at video rates and with HDTV aspect ratio (16:9) have been fabricated with 16.5" and larger screens. LCDs now have a prominent position with uses in both the civil and military avionics sectors.

9.1.4.26 Plasma Display Panels (PDPs)

The principle of operation of the plasma display panels (PDPs) is the same as in a neon light or a fluorescent tube. A gas at low pressure is ionized by an electric field leading to the emission of both visible light and Vacuum Ultra Violet (VUV) light. The VUV is used to excite phosphors to produce the three primary colours. Unlike most other flat panel technologies, a large display size is not difficult to produce using PDPs, and displays with 1 m diagonal and over 4 million pixels have been fabricated. The pixels are obvious when large sized displays are used e.g. for large screen video applications. However, PDPs are not very energy efficient and the monochrome orange-red colour is not very pleasing to the eye over long-term use. At present, over 1 million PDPs are manufactured per annum comprising both AC and DC types. Though available in limited numbers, the full colour displays are still expensive.

9.1.4.27 Electroluminescent Displays (ELDs)

In CRTs electrons are accelerated in a vacuum and strike a phosphor screen which then emits visible light. In electroluminescent displays (ELDs), however, the phosphor layer is sandwiched between two conducting electrodes, one of which is transparent. An electric field is applied across the structure that accelerates the electrons. In turn, electrons excite the activator ions in the phosphor layer. The relaxation of these excited ions leads to the emission of visible light. Additional layers may be used to enhance the basic stability of the structure. The most successful of the ELDs is based on a thin film structure driven by AC fields.

9.1.4.28 Vacuum Fluorescent Displays (VFDs)

Vacuum fluorescent displays (VFDS) are the mainly green emitting devices used in small domestic displays for car clocks, microwaves, etc). Other colours are available including red and orange. The operation is very similar to CRTs but special phosphors are used which operate at much lower voltages, for example ~10eV compared with over 15 keV.

9.1.4.29 Light Emitting Diodes (LEDs)

These semiconductor solid state displays are based on electron and hole recombination in a p-n junction with the colour of the emitted light being a property of the band gap of the material. LEDs are mainly used for status indicators (often replacing incandescent lamps), and are available in red, green, orange, yellow and more recently in blue. LEDs are extremely bright and hence are well suited to applications in avionics displays. The number of LEDs manufactured runs into millions per annum.

9.1.4.30 Field Emission Displays (FEDs)

This is a relatively new technology which promises to retain most of the useful characteristics of the CRT but operate at much lower voltage like the VFD. Like ELDs, LCDs and PDPs, the field emission displays (FEDs) are lightweight, flat and thin. FEDs are based around the concept of cold cathode electron emission from ultra-small cone shaped microtips. As the distance between the phosphor-coated anode and the microtips (cathode) is less than a few millimetres, the emitted electrons excite the phosphor which emits visible light without the need for focusing coils, deflection coils, etc, that are necessary for the CRT. There are thousands of these miniature electron emitting cathodes per pixel, providing both high current density as well as built-in redundancy. Significant progress has been made in

fabricating both monochrome and multicolour displays based on this principle in the last few years.

9.1.4.31 Electronic display characterises: design checklist

The following summarises the suitability of display technologies for applications. Suitability is indicated by √ (most = √√√√, least = √), x indicates not suitable

Image reproduction – Is it important to:	CRT	LCD	PDP	ELD	VFD[1]	LED[2]	FED[3]
(a) show fine detail information?	√√	√√	√√	√√	x	x	√
(b) show medium detail information?	√√√	√√√	√√	√√	x	x	√√
(c) show no perceptible flicker?	x	√	√√	√√	x	√√	√
(d) show fast movement?	√√	x	√	√	x	√	√
(e) distinguish slight differences in contrast?	√√	√	√	√	x	x	√√
(f) show images with a wide range of tonal contrasts?	√√	√	√	x	x	x	√
(g) show images with a wide range of colour contrasts?	√√√	√√	√√	x	x	x	√
(h) display high brightness?	√√√	√	√	x	√	√√	√
(i) reproduce colours very accurately	√√	√	√	x	x	x	√
(j) show brightness uniformity across the screen surface?	x	√	√	x	x	x	x
(k) show colour uniformity across the screen surface?	x	√	√	x	x	x	x
(l) display a very large image (> 40-inch diagonal)?	√[4]	x	√√√	x	x	√√√	x
(m) display an average size image (about 13-inch diagonal)?	√√√√	√√	√√	√	√	√√	x
(n) display a small image?.	√	√√	√	√√	√√	√	√
(o) present an image that is relatively insensitive to the ambient illumination?	x	√	√	√	√	√	x

Other considerations – is it important for the display to be:							
(a) versatile?	√√	√	x	x	x	x	√
(b) cheap?.	√√√√	√	√	√	√√	√√√	x
(c) reliable?.	√√√	√√	√√√	√√	√√	√√√	√
(d) durable?	√√√	√	√√√	√√	√√√	√√√	√
(e) mass produced?	√√√√	√	√	√	√√	√√√	√
(f) thin?	x	√√	√√	√√	√√	x	√
(g) lightweight?	x	√√	√√	√√	√√	√√	√√
(h) energy efficient?	√√	x[6]	x	x	√	x	√√
(i) safe?	√√√	√√	√	√√	√√	√√√	√√

1 VFDs are not normally made for displaying graphics.
2 LEDs are not normally made for displaying graphics.
3 All comments on FEDs are somewhat speculative since no commercial products were available at the time of going to press
4 CRTs are limited to about 45 inch diagonal, unless projection systems are considered. Both CRTs and LCDs are ideally suited for projection-based systems.
5 Large, coarse resolution LED-based units are available but not mass produced.

9.1.4.32 Context of Use

The context will include the physical and psychological and psychosocial environments in which the display is used. For example, a low ambient illuminance, high gravitational force and the wearing of nuclear chemical and biological (NBC) clothing and equipment may give rise to adverse viewing conditions. Similarly, high mental workload, sleep deprivation and

fear-induced stress also affect visual performance, and should be taken into account in the display design. Thus, the extent to which performance is affected will differ within and between individuals. Therefore, an understanding of the users' characteristics and their requirements is fundamentally important.

9.1.4.33 Physical Environmental Conditions

Conditions which affect visual perception and extraneous factors which influence the design of the display should both be considered. These are discussed in detail below:

9.1.4.34 Light Requirements for Reading

The visual conditions include the level of ambient illumination (whether there is enough light to read the display, or too much) whether there are 'hot spots' (that cause glare and reflections - see Def Stan 00-25 (Part HFE4)) and the spectral content of the ambient light. For example, operators wearing Night Vision Goggles (NVGs) in a cockpit often suffer from problems of transient adaptation between the low level of illumination in the 'outside world' and the high level within cockpit, influenced by the luminance of the displays.

The spectral content of the ambient illumination is important as it affects the operator's ability to distinguish display detail. For example, red illumination is often designed into systems in an attempt to preserve scotopic (dark adapted) vision. However, this can render colour coding on displays ineffective, e.g. brown map contour lines on many maps (see Def Stan 00-25 (Part HFE4)). Similarly, NVGs are more sensitive to red wavelengths than blue, and hence blue images on darkened displays require greater luminance.

9.1.4.35 Cleanliness

Sometimes overlooked is the performance impairment that can be caused by displays that have become dirty in use. Glass-fronted displays usually provide two surfaces, external and internal, upon which substances can accumulate. The internal surface is often inaccessible and if dust gathers, veiling reflections appear. Finger marks (e.g. on touch screens or filtered screens), scratches, mud, and other substances can obscure information, while water droplets can cause localized distortion of the image

9.1.4.36 Vibration

Vibration can impair visual performance by producing an image that moves on the retina. The environmental characteristics that are most likely to produce image motion are:

a. frequencies in the range 1-20 Hz;
b. displays mounted on the head;
c. images not collimated (image not focused at infinity);
d. retinal image motion of approximately 1 min of arc or greater;
e. part of the visual task involves operator control (under vibration), e.g. holding a map;
f. sinusoidal vibration components (single frequency);
g. if the display is viewed through an optical magnification device; or
h. demanding visual tasks such as target identification or reading text or symbols in a short time.

The pursuit reflex allows eyes to follow images that move on the retina. Consequently, image motion that is produced by vibration has little effect on visual performance when this

reflex is operating, i.e. up to 1 Hz. Above 20 Hz vibration encountered in military environments rarely produces sufficient image motion to impair visual performance.

Guidance on exposure limits to whole body vibration in terms of the affects on performance and health is given by BS 2631 Guide to Measurement and Evaluation of Human Exposure to Whole-body Vibration and repeated shock.

9.1.4.37 Auditory

Auditory stimuli are sometimes difficult to perceive in noisy environments and can therefore be enhanced with visual reinforcement (e.g. parachutists are signalled to jump in noisy aircraft cabins using lights). In such cases, redundant visual coding may be suitable.

9.1.4.38 Thermal

Electronic display media differ in respect of both heat emission and performance at temperature extremes. The equipment or vehicle design and the operational environment may influence the choice of display technology.

9.1.4.39 Operational Space

There may be physical limitations of the size of the display which have implications for the choice of display medium. For example, the smaller size of Flat Panel Displays (FPDs) might make them more suitable in a restricted space such as a cockpit, armoured fighting vehicle (AFV) or for portability in the field, but where very large displays are required, Cathode Ray Tubes (CRTs) may be more suitable.

9.1.4.40 Operational Security and Soldier Survivability

The nature of the display may be influenced by the procedural requirements necessary to avoid compromise. For example, it may be necessary to switch off display illumination when vehicle or command post doors are opened in the field. Similarly, the use of permanent illuminated status indicators (e.g. ‘power-on’ lights) should be avoided in the design of field equipment.

9.1.4.41 Mental Workload

The intensity of the operator’s mental workload caused by the overall task environment can have a significant effect on his/her capacity to perceive information from displays and the accuracy with which it is comprehended. The display designer should discuss all visual tasks with the crew station designer in which the operator is involved. Most importantly, the design should minimise the potential for conflicts both in terms of contradictory information and in the attentional demands of the operator, including stress.

9.1.4.42 Impact of Regulations

Certain legal regulations cover the design of visual displays. For example, the Health and Safety (Display Screen Equipment) Regulations (1992), require the following of display screens:

a. The characters on the screen shall be well-defined and clearly formed, of adequate size and with adequate spacing between the characters and lines;
b. The image on the screen should be stable, with no flickering or other forms of instability;

c. The brightness and the contrast between the characters and the background shall be easily adjustable by the user, and also be easily adjustable to ambient conditions.
d. The screen shall be free of reflective glare and reflections liable to cause discomfort to the user.
e. The screen must swivel and tilt easily and freely to suit the needs of the user.
f. It shall be possible to use a separate base for the screen or an adjustable table.

Guidance to compliance with these Regulations is published by the Health and Safety Executive in their guide L26. Though the Guidance indicates that most displays on board a means of transportation are exempt from the Regulations, designers should still endeavour to produce displays that will allow the Ministry of Defence (MOD) to comply with the terms of the Regulations, and strong justification is required for failing to do so. For displays in static operation, compliance to the terms of the Regulations is mandatory.

Most of the display obligations can be met by complying with ISO 9241-3: 1992, Ergonomics requirements for office work with visual display terminals (VDTs), Part 3 Visual Display Requirements. Compliance with this standard will in most cases meet or go beyond these requirements.

9.1.4.43 Context of Use Design Checklist

Consider the:

a. operational objective;
b. legal requirements, design standards and Human Factors Integration (HFI) obligations;
c. level of operational security required;
d. visual conditions;
e. levels of:
   i. illumination, luminance;
   ii. vibration;
   iii. noise; and
   iv. heat;
f. space restrictions;
g. likely cleanliness; and
h. operator's mental workload and stress when using the display.

9.1.4.44 Recommendations

For visual tasks that require fine discrimination, ensure that the lighting is sufficient (see part HFE4).

As visual sensitivity depends on a number of variables and varies between individuals, it is advisable to develop mock-ups of critical systems to evaluate the system design.

When prolonged and intensive visual work is likely to be undertaken by personnel, tests of visual acuity and contrast sensitivity should be first carried out by suitably qualified personnel to select appropriate individuals.

Whenever possible, display screens should be flicker-free to the user population. However, because of individual differences in flicker perception, this may not be practicable for all

observers under all situations. An algorithm for testing CRT displays for flicker is provided in Part 25.

When speed of response is important, reduce the number of choices that the user must make or consider the use of coding (e.g. shape coding or colour coding).

9.1.5 Auditory Information Displays

The aim of this Part of this Standard is to provide both the sponsor for the procurement of defence equipment, and also the designers of that equipment, with guidance on the design, selection and assessment of auditory signals.

In presenting information to a human operator the equipment designer may have an apparently wide choice of channels from among hearing, vision and other senses. Touch, kinaesthetics, balance, taste and smell are of limited use, and are called 'low capacity' channels. Vision is the preferred channel for the transfer of detailed information (see other sections within this part (Part HFE8)). Not only are auditory signals independent of lighting conditions, and visual load, but hearing is omni-directional and is therefore the preferred channel for the diversion of an operator's attention from the current activity, and to alert multiple operators with a single signal. It is comparable in importance to vision, and is the primary means of perceiving speech. In this context the meaning of non-verbal auditory signals must be learned, in contrast to the assumed understanding of speech gained at an early age. An initial non-verbal component of a signal may be used to attract attention to subsequent words, phrases or complete sentences. Verbal components should follow the guidelines laid down in other sections within this part (Part HFE8)

An auditory display is produced when an auditory signal is designed to vary in response either to changes in a known factor or to the actions of a human operator.

In order to be effective an auditory signal must be heard, recognized and understood.

This Part of this Standard concerns the transfer of information to human operators using their hearing and a learned set of auditory signals.

This document identifies the factors influencing the effectiveness of auditory signals, provides guidelines for the design and selection of auditory signals, and states how the effectiveness of proposed auditory signals may be assessed. These guidelines include occasional mandatory requirements where experience indicates them to be necessary. These requirements include the word 'shall' underlined, e.g. '<u>shall</u>' or '<u>shall not</u>'.

9.1.5.1 Valid Use of Auditory Signals

In the early stages of concept definition for new systems or equipment, the need to transfer information to human operators through auditory signals or other means should be reviewed.

9.1.5.2 Suitable Use for Auditory Signals

Auditory signals are appropriate when:

a. the information to be processed is short, simple, transitory, and requiring immediate or time-based responses;

b. the critical nature of the response to the information makes supplementary or redundant transmission desirable, through audio as well as visual modes, when for example:
   i. it is desirable to warn, alert or cue the operator to subsequent further response;
   ii. custom or usage has created anticipation of an audio display;
   iii. voice communication is desirable, and needs to be cued by a non-verbal signal;
   iv. operational or environmental factors limit vision but not hearing.

9.1.5.3 Examples of Suitable Auditory Signals

Equipment designed to detect dangerous objects or substances produce auditory signals coded for proximity to them. In such equipment, fault warnings, derived from Built-In Test Equipment (BITE), shall produce a broad band noise which obliterates all normal detection signals, thus preventing normal use of unserviceable equipment. See above clause.

In order to warn the occupants in a building of fire, the choice of a strident bell conforms with the clauses above, yet signal improvement, e.g. by the addition of speech supplements, may be necessary to overcome the habit of ignoring bell-like sounds heard as frequent false alerts from burglar alarms.

Further information may be found in BS ISO 7731:2001, US DOD MIL STD 1472F (1999) and References [401], [403] and [404].

9.1.5.4 Inappropriate Use of Auditory Signals

Auditory signals are inappropriate when:

a. environmental noise prevents effective hearing e.g. noise from engines in ships, aircraft or land vehicles, or from air conditioning plant in buildings;

b. personnel, other than the intended listeners, can hear auditory signals and are distracted from important tasks by those signals;

c. specific auditory signals can be confused with existing signals, or with known interactions with the operational environment.

Further information may be found in BS ISO 7731:2001 and US DOD MIL STD 1472 F (1999). The comprehensive list of prohibitions found in the MIL STD 1472 F (1999) should be taken as cautionary advice for specific operational circumstances.

9.1.5.5 Unsuitable Types of Auditory Signals

The following types of signal shall not be used where confusion exists because such signals occur in the operational environment;

a. modulated or interrupted tones which resemble navigation signals or coded radio transmissions;

b. continuous signals which resemble hisses, static, electrical interference, or electrical mains hum.

9.1.5.6 Signal Audibility

Ideally all intended listeners should hear an auditory signal on every occasion under all operational conditions. Such a requirement is difficult to specify, particularly when it is recognized that any or all of the reference data may not be available or may change during the service life of an equipment or even during its development. The need for an audible signal may be stated as an operational requirement, against which designers should match auditory signals as closely as possible.

For the purposes of this Standard, equipment designed to generate, transmit or control auditory signals shall include a low-cost means of easily and rapidly modifying the physical characteristics of those auditory signals.

9.1.5.7 The Auditory Communication Window

Signal audibility depends on signal frequency and level in relation to hearing threshold at the same frequency. In the presence of noise the threshold is elevated to a masked threshold, when a higher signal level is needed for audibility at a given frequency. Conversely very loud noise can distort human hearing and reduce signal audibility and recognition. Hence there is an upper limit to the level of auditory signals which is similar to that recommended for the avoidance of hearing hazards (see Part HHA6 of this Standard and References [403] [404]). These points are conveniently represented in an auditory communication window (seeFigure 9.1:10).

Further information is available in the 'voice communication' section of this Standard (HFE8).

The absolute threshold, the lowest line in Figure 9.1:10, is unsuitable, since it is derived from the sounds just heard by about 50% of persons within the age limits of 18 to 25 years inclusive (see BS EN ISO 7029: 2000). An effective limit some 12 to 15dB higher than the 'absolute' threshold may be assumed for user populations that are monitored regularly for good hearing, e.g. aircrew. Research has shown that 17% of army recruits at induction had had hearing losses of 30 dB or more at one or more of the standard audiometric test frequencies between 250Hz and 8kHz [for further information see Reference [400].

Assuming that these losses were evenly distributed over frequency, a hypothetical lower limit can be made as an example of the reduction which can occur in the available auditory communication window, illustrated in Figure 9.1:10 by the dashed line labelled Effective service limit. Auditory signals should be based on frequencies in the range 300Hz to 3kHz. There should be sufficient energy in the frequency range below 1500Hz to meet the needs of personnel with hearing loss or wearing hearing protectors.

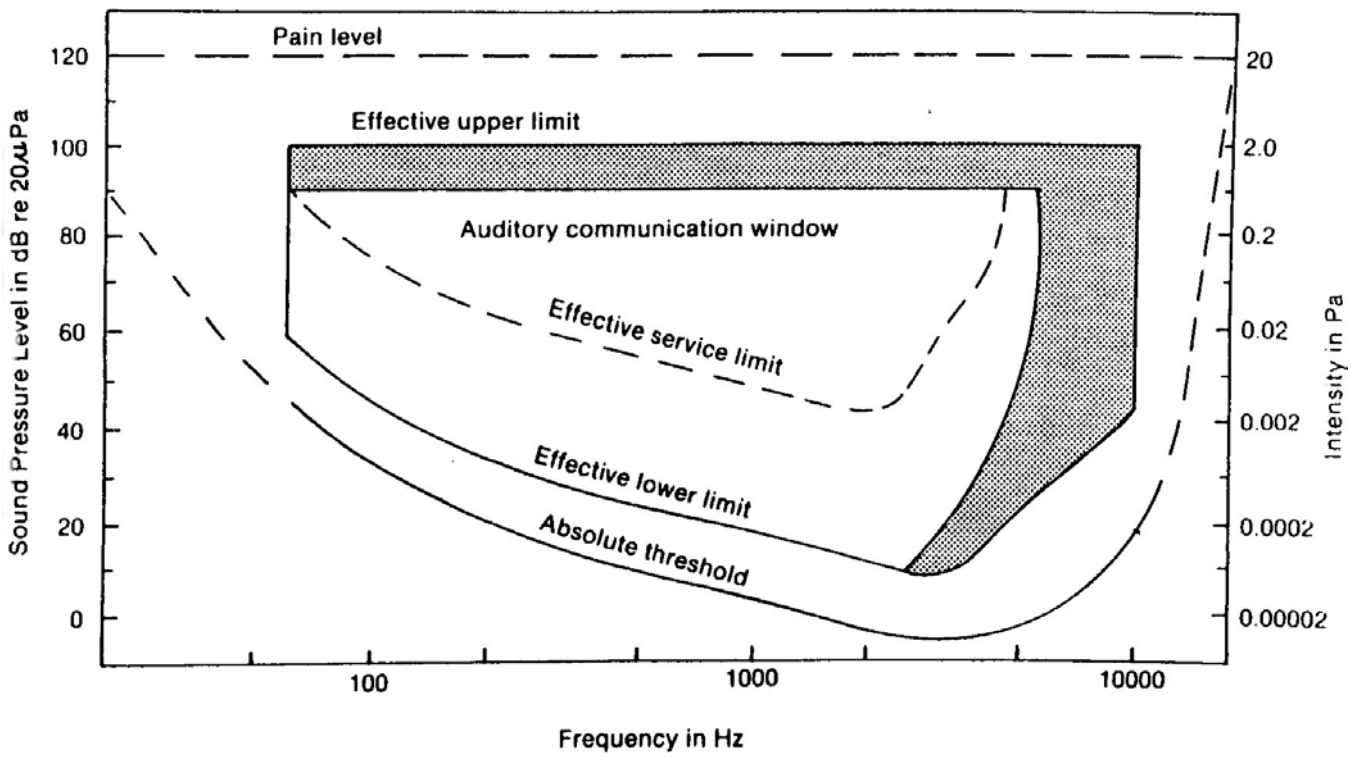

Figure 9.1:10: The Auditory Communication Window

9.1.5.8 Signal Audibility in Quiet Conditions

For the purposes of this Standard quiet conditions occur when ambient or background noise levels are less than 50 dB(A). Limiting sound levels from auditory signals to be heard in

quiet conditions are suggested in the clauses below. For free-field conditions, the sound levels are relevant to the head position of a listener, but measured in the absence of the listener. For conditions requiring the use of headphones, the sound levels are relevant to signals measured beneath the headphones at the ear of a listener who is present.

9.1.5.9 Maximum Limit

The maximum level for an auditory signal presented in quiet conditions should be 90dB(A), preferably 85dB(A). Even so, at this level an undesirable startle reaction may be produced. Unexpected auditory signals, should be audible to all intended listeners. Signal levels above 90dB(A) may be justifiable in some signal reception areas, and for some listeners, in order to achieve signal audibility for others. Potential hazards to hearing should be minimized by limiting exposure duration (see Part HHA6 of this Standard).

9.1.5.10 Minimum Limit

The minimum sound level for an auditory signal presented in quiet conditions shall be 65d(A), (see BS ISO 7731:2001). This limit shall be reduced only when there is direct evidence of population hearing levels suited to a lower limit.

9.1.5.11 Night Operations

For equipment to be used silently at night the sponsor may designate a single value of 60dB(A) at the ear under an earphone. In this case personnel should be monitored regularly for good hearing.

9.1.5.12 Signal Audibility in Noise

The presence of noise will affect both upper and lower limits for auditory signals. However, in the absence of data for assessment and prediction of suitable sound levels very little positive guidance can be given. The suggested levels are free field or at the ear as for signals in quiet conditions.

9.1.5.13 Maximum limit

The maximum sound level for a signal presented in noise is based on three criteria: the need to avoid hearing hazards, startle reactions and distortion of the signals presented. Signals need be no more than 15dB above masked threshold in order to be effective.

9.1.5.14 Minimum Limit

In the absence of suitable data for assessment or prediction it is only possible to recommend that signals are at least 15dB above masked threshold in at least one, preferably three, 1/3rd octave bands (see also BS ISO 7731:2001).

9.1.5.15 Signal Level

Auditory signals should preferably be presented within a predetermined and fixed range of sound level. When equipment must be used both in relatively high ambient noise levels and also in very quiet conditions, e.g. without detection by a potential enemy, it is permissible to provide a volume control, which shall not permit a zero signal. A volume control shall therefore provide either a choice between preset levels, usually high and low, or continuous adjustment between preset minimum and maximum signals. Throughout the range of a volume control, auditory signals shall comply with the requirements for audibility and safety (see Part HHA6 of this Standard).

A regular auditory signal shall be available to permit the human operator to set and monitor a volume control. The confidence signal, when provided, shall be used for this purpose.

When provided, a volume control shall adjust to a similar extent the sound levels of all the auditory signals in the set, subject to permitted minima and maxima.

9.1.5.16 Signal Intrusiveness and Cancellation

It is known that, overloaded human operators will occasionally use a cancelling control in order to remove an intrusive warning signal without taking the intended action. In order to avoid such situations, designers are advised to reduce the intrusiveness of the signal, or to reduce operator workload. It is important to automatically link cancellation to the corrective action, and, if an erroneous response is made, to generate an automatic increase in signal urgency. Provided required responses and actions can be correctly identified within the equipment, an increase in safety could be achieved.

Cancellation of an auditory signal should automatically reinstate signals of lower priority which had been suppressed. It is preferable that reinstatement should be delayed pending identification of correct response to the signal of higher priority.

9.1.5.17 Signal Recognition

In order to be effective an auditory signal must be recognized. In this context recognition of an auditory signal occurs when attention is gained and listeners successfully discriminate the signal from all other sounds. The association of a meaning with a recognized sound is covered in a later section.

9.1.5.18 Gaining Attention

An auditory signal must gain the attention of human operators concentrating on tasks other than listening for an unexpected signal. Increasing signal level can, and often does, cause startle reactions. The better course of action is to select distinct signal characteristics, as different frequency content or temporal patterns are likely to be more effective in this respect than an increase in signal level. Specific operator tasks will have an important influence on attention gaining. Therefore these design suggestions should be trialed using listeners who are carrying out their normal duties.

9.1.5.19 Startle Reaction

Abrupt onset and offset of an intense warning sound can and often does produce a startle reaction characterized by transitory general muscle tension. Such abrupt sounds can cause a temporary disruption of cognition, see References [403] and [404] for more information. Therefore signals shall be arresting yet not startling. This apparent conflict stems from the belief that all warnings must be generated as quickly as possible, when in fact instantaneous response is often beyond human capability, and in some cases should be discouraged. Correct onset of warnings can permit decisions undiverted by startle reaction. In general, designers shall avoid using, in the first 0.2s of a signal: abruptly rising waveforms; square topped wave forms (e.g. use trains of rounded pulses) or maximum level. Startle reactions may be expected when sound level rises by more than 30dB in 0.5s.

9.1.5.20 Signal Discrimination

When signal audibility and sufficient attention gaining have been secured for a signal, it is still necessary to ensure discrimination from other signals. Historically, variation of one acoustic dimension has been regarded as sufficient for this purpose. For signals in categories one and two, the signal shall be dominantly different from other sounds in the reception area, in at least two of the following acoustic parameters; sound level in a selected bandwidth; frequency combination; and temporal pattern. All other categories of a signal shall be so in at least one of the above acoustic parameters.

9.1.5.21 Discrimination of Signal Level

Subjective assessment of signal level is unreliable and shall not be used as the sole means of discrimination between signals. See References [410] and [421]for further information. Within a signal, changes in level are recognizable, as in interrupted signals or amplitude modulation.

9.1.5.22 Discrimination of Frequency

Although signal recognition should never rely on a sense of absolute pitch, discrimination between frequencies is easier than between signal levels. Even small changes in frequency within a signal are recognizable when presented for immediate comparison under quiet conditions, e.g. a few Hz either side of 1kHz.

There should be sufficient energy below 1500Hz in the signal to permit recognition by listeners wearing hearing protection, or suffering from hearing loss.

Selection of a harmonically related group of frequencies can produce signals which are more robust to the distorting effects of noise, even when the frequencies in noise vary. Such signals are robust to the effects of noise because of the human ability to recognize the fundamental frequency in such signals even when it is masked or even absent. Consequently designers should adopt multiple harmonic relationships within signals yet avoid them between the frequencies of signals intended to carry different meanings. In this respect it is important to evaluate all signals in the same trial.

9.1.5.23 Discrimination of Temporal Pattern

Regular interruption of a signal has been widely used as an aid to recognition. Consistency in repetition is more important than the value of on-off time selected from within the general guideline of 0.5 to 2s.

More recently different rhythmic patterns of signal pulses have been formed into discriminable sequences, which themselves may be repeated to form pulse trains. See References [403] and [404]for further information. The following information is based on these principles. They have been derived primarily for auditory signals on the flight deck of civil aircraft and efficacy in other situations should be confirmed experimentally.

In order to achieve the best compromise between signal recognition, avoiding startle reactions, and reducing interference with normal speech, pulses should be constructed from several harmonically-related frequencies suited to the available auditory communication window (see Figure 9.1:10 and the 'voice communication' section of this part HFE8) and the sound which is to be perceived. The optimum signal should be modulated (AM or FM) at between 0.5 and 4 Hz. Each pulse should last for 100 to 150 ms, rise or fall within 20 to 30 ms, have a top level for about 100 ms yet be rounded through 25 ms quarter sine-wave gates.

A sequence of six pulses is illustrated in Figure 9.1:11. Within a sequence, the spacing need not be regular, although once fixed it should be retained in repetitions, unless a different sound is needed. It is possible to increase the apparent urgency of a sequence by reducing the spacing between say the first four elements (see Figure 9.1:11). In contrast longer spacings are appropriate for initial auditory signals or attensons. Short bursts of sound (pulse sequences) separated by 5 or 10 seconds can present information effectively with little or no interference with speech.

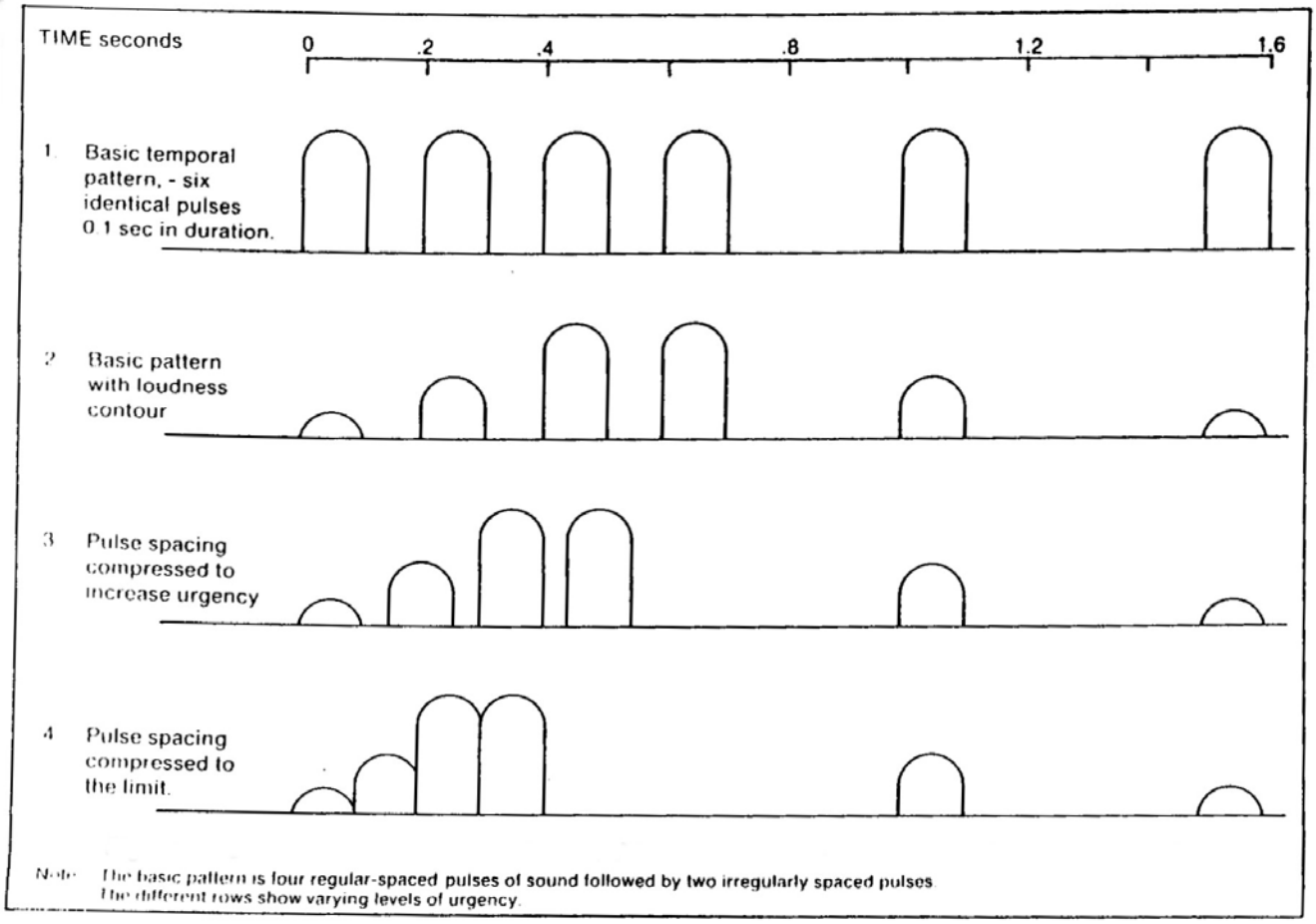

Note: The basic pattern is four regular-spaced pulses of sound followed by two irregularly spaced pulses. The different rows show varying levels of urgency.

Figure 9.1:11: Component Patterns for an Advanced Auditory Warning Sound

Note: The basic pattern is four regular-spaced pulses of sound followed by two irregularly spaced pulses. The different rows show varying levels of urgency.

For Pulse Trains the overall level of repeated signal sequences can be varied (see Figure 9.1:12) such that the initial sequence is well above masked threshold, yet below startle level; middle sequences may be at a maximum compatible with the absence of hearing hazard; several final sequences may be at the lowest level audible thus reinforcing the message and permitting superimposed human voice communication. Such automatic reduction in level will make the signal appear less 'selfish'.

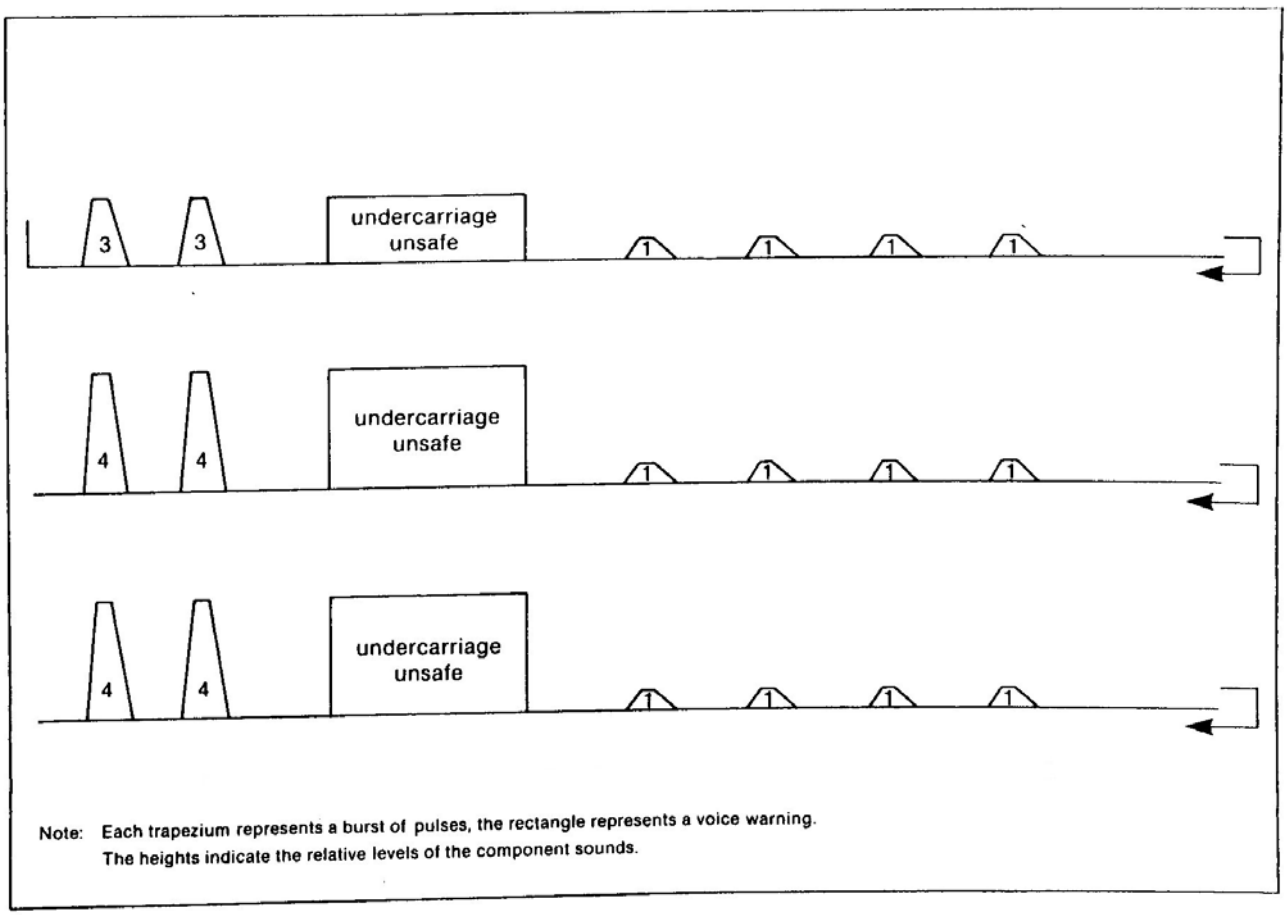

Figure 9.1:12: The Time Course Of A Complete Auditory Warning

Note: Each trapezium represents a burst of pulses, the rectangle represents a voice warning. The heights indicate the relative levels of the component sounds.

9.1.5.24 Signal Meaning

In order to be effective an auditory signal once recognized, must also be understood, i.e. each auditory signal shall be associated unambiguously with a single meaning. This section of the Standard provides general guidelines on the reduction of signal ambiguity, and suggestions for the selection of specific auditory signals.

9.1.5.25 Signal Number

The specification of a generally applicable maximum number of auditory signals is beyond practical definition. In order to avoid ambiguity, experience suggests that no more than six, preferably four auditory signals should be used. See References [399], [403], [404], [405], [417], [419]and [420] for further information. Designers are advised to use no more than are necessary, and less than the advised maximum whenever possible, unless directly relevant experimental evidence can be provided to the contrary.

Grouped visual displays should be used to provide specific and detailed information, and master auditory signals to draw attention to them (see Defence Standard 00-970 and US MIL STD 1472 F (1999).

Attensons and speech supplements shall be used only when the signal length does not impair the reception of other auditory inputs, including voice communication with other personnel.

9.1.5.26 Previous Meanings

Well-known sounds previously associated with an intended meaning should be incorporated in new designs, including the perpetuation of specific frequencies or frequency combinations in the design of signal pulses. Examples for aircraft are given in Defence Standard 00-970 and for ships in Def Stan 02-599, e.g. submarine diving alarm.

Specific physical characteristics of well-known auditory signals shall not be incorporated into signals carrying different meanings, whether or not the well-known signal appears in the signal set.

9.1.5.27 Apparent Urgency

The more rapid the repetitions of signal sequences the more urgent they will sound, e.g. the rate of signal modulation or repetition of pulse sequences in a pulse train. Both apparent urgency and attention gaining characteristics should be matched to the relative priority of each signal in the set.

9.1.5.28 Auditory Displays

When it is necessary for a human operator to monitor changes in a known factor, an auditory display can be preferable to a visual display, particularly when a specialist monitors the display continuously as a primary task. Equipment designed to detect dangerous objects, materials or substances should employ continuous auditory displays, particularly when the detection rate is low. In such cases the auditory signals may be coded for proximity. Increases in signal frequency, in rate of signal modulation or in rate of signal repetition, shall indicate closer approach. For this purpose, designers should avoid using an increase in signal level, which can prove unreliable, particularly in the presence of variable background noise. Changes in sensor output should produce corresponding responses in the auditory signal. Direct sensor to signal relationships are preferred. Delays caused by signal processing, for example, are undesirable, and are likely to increase task difficulty and human error.

9.1.5.29 Erroneous Signals

Frequent false auditory signals occurring either as a result of a fault in equipment (a false alert) or of an environmental factor (a false alarm), will degrade user confidence and the meaning of a true signal. The reliability of equipment shall be sufficient to reduce equipment faults to the minimum specified by the sponsor. Designers are encouraged to seek ways of avoiding interactions between equipment and the environment which are known to cause auditory signals. A ‘fault warning’ shall be treated as either a warning signal or a cautionary signal depending on the criticality of the fault.

9.1.5.30 Requirements for Specific Auditory Signals

This Section of this Standard provides guidance on the design and selection of suitable attributes for specific auditory signals, including: Emergency Evacuation Signal; Warning Signal; Cautionary Signal; Advisory Signal; Confidence Signal; All Clear; Verbal or Voice Signals.

9.1.5.31 Emergency Evacuation Signals

Pending publication of British and International Standards on Emergency Evacuation Signals (EES) the following guidelines are suggested for suitable Defence applications, e.g. fire alarms in offices, barracks, stores and other buildings:

a. an EES shall be audible above all other auditory signals and environmental noise in the reception area;

b. an ESS should have high attention-gaining characteristics;

c. an EES may be complemented by visual signals. Reinforcement of signals may be achieved by matching any rate of flashing presented visually with variation in the time pattern of the auditory signal

d. equipment shall be designed to permit the sounding of an EES for training purposes. In order to aid the listener(s) to retain signal meaning in memory, it is likely that unexpected practice will be necessary. Rare real emergencies are likely to be insufficient for this purpose;

9.1.5.32 Warning Signals

A warning signal shall have priority over non-warning auditory signals. It should delete, suppress or obliterate cautionary and advisory signals. Suppressed signals shall be reinstated automatically, when the condition giving rise to the warning signal has been corrected.

The physical characteristics of warning signals should be chosen to enhance attention gaining characteristics. For preference, complex, interrupted or modulated signals should be used. Interruption rates should produce equal on-off times which lie between 0.5 and 2 seconds. The minimum base frequency for modulated signals should be between 1 kHz and 1.5 kHz, and the ratio between the maximum and minimum frequency should be at least 1:1.3 and not more than 1:2. Further information is available in BS ISO 7731:2001.

9.1.5.33 Cautionary Signals

A cautionary signal shall have priority over auditory signals in categories four and five. A cautionary signal should delete, suppress, or obliterate any advisory signal. Such suppressed advisory signals shall be reinstated automatically when the condition causing the cautionary signal is resolved or the signal is acknowledged or cancelled by the operator.

Cautionary signals should reduce the need for warning signals, by providing instead an early prompt for corrective action, e.g. before damage occurs to engines or machinery as a result of overheating or lack of lubricant.

The physical characteristics of cautionary signals should provide some attention-gaining potential after priority allocation of such characteristics have been made to warning signals in the signals set. Basic frequencies between 400 Hz and 1 kHz are preferred, subject to any limitations in the available auditory communication window.

9.1.5.34 Advisory Signals

Advisory signals are of low priority. They do not normally require high attention gaining characteristics, which shall be reserved for warning and cautionary signals e.g. square, sawtooth, ramp and similar waveforms. Short soft signals at low audio frequencies, or several harmonically related frequencies are suitable. Although the nature of the task will influence the choice of physical characteristics, frequencies between 250 Hz and 400 Hz are preferred.

Particular advisory signals are given separate names for convenience, e.g. Confidence Signals or Attensons (see definitions).

9.1.5.35 Confidence Signals

Designs which purport to provide a confidence signal derived solely from the operation of an on-off switch shall be prohibited.

Confidence signals shall be presented either less frequently than, or at the cyclic rate of, successful output from the BITE. When it is necessary to avoid interaction with other auditory signals, presentation rates should be low, yet related to the criticality of the task. The sponsor of an equipment should define the maximum time between successive presentation of an intermittent confidence signal and the valid continuous presentation after a successful output from the BITE.

The physical characteristics of confidence signals should conform to the guidelines for advisory signals. Experience has shown that a suitable signal is formed by a soft intermittent burst of white or pink noise (see definitions) lasting from 0.5 to 1s and repeated at regular intervals of from 7 to 10s. Precise control and consistency of the repetition rate over the life of the equipment in service and between similar equipment, is far more important than precise specification of signal duration or interval time.

9.1.5.36 All Clear Signals

An all clear Signal is a category five auditory signal which is complementary to an auditory signal of category one. Pending publication of British and International Standards on this topic, the following guidelines are suggested for suitable Defence applications, e.g. return to normal duties after an emergency signalled by an EES.
If used, an all clear signal shall be sounded continuously for at least 30 s at a constant frequency or harmonically related frequencies.

An all clear may be complemented by a steady green visual signal.
Equipment shall be designed to permit the sounding of an all clear for training purposes.

9.1.5.37 Voice Signals

Auditory signals shall not be expected to carry the detailed information that is contained in words until attention has been gained. Once attention has been gained by an initial non-verbal signal or attenson, it is permissible to add spoken words. The detailed information given thus should guide the listener, wherever possible, to information in a visual display, (see the 'visual display' section of this part (HFE8)) which is the preferred mode for such purposes. The verbal components in auditory signals can be used not only as a guide to a visual display, but also as a reinforcing supplement to it. This can be very useful when the listener is involved in complex duties with a high workload. All verbal components of auditory signals shall conform to the requirements of the 'voice communication' section of this part (HFE8). Words shall be chosen to avoid ambiguity with other words through contrast in pronounced sound as well as in pre-learned meaning (see Defence Standard 00-970 Chapter 105).

The following rules apply:

a. verbal components take a relatively long time to present, and thus the risk of interference with speech communication is greater than with non-verbal signals;
b. verbal components are usually easy to learn and difficult to forget;
c. confusion can occur with normal speech communication with other personnel;
d. voice warnings should be used only to supplement non-verbal warnings;
e. ambiguity of meaning shall be avoided when the same words are used in visual displays (see the 'visual display' section of this part (HFE8) and HFE3 of this Standard).
f. in either auditory or visual signals, the use of abbreviations shall not lead to ambiguity in either mode;
g. the information in a verbal signal may be repeated at a more moderate level as a reinforcement, and subsequently at an even lower yet audible level. After a time and in the absence of corrective action, or cancellation, the verbal message can be repeated at the more moderate intensity as a reminder.

9.1.5.38 Training Aids

The majority of training aids are produced in the form of handbooks, manuals or simulators and audio-visual aids. The latter have been introduced into training programmes, to an increasing extent. In this context it is possible to make personnel aware of auditory signals, and give them an experience of them. In order to reinforce the link between the perceived sound of an auditory signal and its meaning, there are a number of design actions which can be taken.

9.1.5.39 User Expectancies

In order to reduce training costs, it is important to select auditory signals which are widely recognized, and associated with a specific meaning. In order to ensure that the intended meaning is perpetuated it is necessary to retain the perceived sound. The need for additional training should be considered when synthetic speech is used. See References [477], [478] and [479]for further information.

In order to achieve useful matching with user expectancies for the intended signal, repetitive signal changes and re-testing may be necessary.

9.1.5.40 Consistency in Signal Meaning

For the transfer of training, it is necessary to achieve consistency in the signal meaning associated with given signal characteristics. It is important to recognize that personnel are likely to use several similar types of equipment during their careers due to the replacement of equipment, individual postings or rotation of duties for example between Army units, RN ships or RAF squadrons. The perpetuation of well-known signals is already a requirement in Def Stan 02-599. See also Reference [476].

9.1.5.41 Reminder Signals

A sequence of short reminder signals can be generated automatically when equipment is switched on, or on demand, e.g. at hand-over to the next watch appropriate important applications are as follows:

a. signals are sounded in a sequence of increasing urgency and priority. If a confidence signal is used, the sequence should start with it, revert to it at the end, and continue it, if the equipment is functioning correctly;

b. when Built-In Test Equipment (BITE) is fitted, the BITE shall drive the sequence, start with it, revert to it at the end, and continue it, if the equipment is functioning correctly;

c. when BITE is not fitted, the BITE shall drive the sequence of reminder signals after successful completion of the automatic tests;

d. the above principles for reminder signals may be incorporated into the switching on and checking of individually operated equipment, or of sub-systems in large or complex equipment, e.g. in the pre-flight checks of aircraft. In this context it is important that reference is also made to the existing single Service standards and learned start-up procedures (see Defence Standard 00-970, Def Stan 02-599).

9.1.5.42 Evaluation of Auditory Signals

Each auditory signal, and the complete set of auditory signals, shall be evaluated when using prototype equipment during development; in a sample of production equipment, if required by the sponsor; and whenever a new or modified auditory signal is introduced into the set.

Each auditory signal, and the complete set of auditory signals, shall be evaluated according to the principles and test methods set out in BS ISO 7731:2001 as well as those summarized in Table 9.1:7 below.

Auditory Signal Methods	Criteria and Remarks
Compliance with the requirements of this Standard shall be checked by measurements taken at the head location of listeners and in their absence, or at the ear of listeners wearing headphones (Rood 1984) as appropriate.	Sound Level meters shall be at least class 2 as defined in BS 5969:1981 (see also ISO 266 and IEC 225).
Until criteria are met, measurements shall be taken for each signal, and the greatest combined ambient and background noise in the following sequence:	As a criterion is met, subsequent criteria become optional.
(a) A-weighted sound level	That of the signal shall be at least 15 dB above that of the noise, and shall be at least 65 dB(A).
(b) Frequency analysis in octave bands.	The sound level of the signal shall be at least 15 dB greater than that of the noise in at least one octave band. Preferably the maximum octave band level of the signal shall be in a different band from that of the noise.
(c) Frequency analysis in 1/3rd octave bands	The sound level of the signal shall exceed that of the noise by at least 15 dB in at least one, preferably three, 1/3rd octave bands.
(d) Temporal distribution of the A-weighted sound levels.	The temporal distribution of signal energy shall be distinct from that of the noise. The pulse frequency of a signal shall not be identical with any periodic fluctuation in the noise level.
Listening Test Methods	
Compliance with this Standard shall be checked by sounding an auditory signal in the loudest combination of ambient and background noise, and in all important frequency variants of it.	Noise may vary in level and in frequency content e.g. the noise on the flight deck of aircraft during descent. Each condition should be checked separately.
Auditory signals shall be sounded unexpectedly to each of a group of 10 listeners, representing the range of age and noise induced hearing loss of the user population. The test shall be repeated on five separate occasions.	If fewer than 10 users exist all should participate. All listeners shall recognize all signal sounding without ambiguity. Instructors should be considered.
The listeners shall wear personal hearing protection, if appropriate.	
The listeners shall carry out the tasks or simulated tasks done as their normal duty in the signal reception area.	
Operational clothing and personal equipment should be worn during the tests.	

Table 9.1:7: Auditory Signal measurement and Listening Test Methods

9.1.5.43 Flexibility in Design

In order to save time and reduce the costs of repetitive testing and redesign, it is important to evaluate auditory signals at an early stage in design, and where possible, predict signal effectiveness. See References [398], [403], [404]and [405] for further information

Designers are encouraged to successively refine available data and recognize that at least some adjustment and retesting of auditory signals will probably be necessary. For the purposes of this Part of this Standard, equipment shall be designed to permit easy and rapid replacement at low cost of those components generating or controlling the physical characteristics of auditory signals. Part HFE9 of this Standard includes guidelines on ease of access and replacement.

9.2 Checklist for Auditory Information Design

A checklist is set out below in the form of a questionnaire. More direct guidelines can be found in Reference [398] although these have been developed specifically for the coalmining industry.

9.2.1 Personnel

Have all the potential listeners been identified?

Are special categories of user included, such as older and partially deaf personnel, or instructors as well as operational personnel?

Are hearing thresholds available including masked thresholds where appropriate?

If not, are steps being taken to measure them?

Are panels of at least 10 listeners, representative of the users, available for participation in tests of early acceptability as well as for final evaluation?

If not, what action is being taken to ensure their availability?

To what extent are vision, hearing and particularly speech communication in active use when auditory signals are to be generated?

9.2.2 Signal Meaning

What information must be transferred to the user?

Can this information be classified into a small number of coherent groups?

Is the auditory channel used to transfer detailed information?

If so, is this avoidable?

In consultation with the user, has a decision been made on the need for a confidence signal?

After the selection of meanings for intended auditory signals, have relative priorities been allocated?

Are simple or complex auditory signals required?

Are verbal components needed?

If so, what is the vocabulary used with present equipment, and has an initial list of keywords been selected for tests of compatibility with user expectancies, and for potential ambiguity?

9.2.3 The Environment

Is there any source of ambient acoustic noise in the working environment, or of background acoustic noise generated by the equipment?

If so, what actions are needed to obtain data on the sound level and spectral composition of each major portion of the mission or duty cycle, which shows a consistently distinct noise characteristic?

If any noise is present, are there any periodic fluctuations which will match and therefore mask any temporal patterns intended for auditory signals?

Do intended signals satisfy criteria to avoid hazards to hearing?

9.2.4 Signal Characteristics

Have signal characteristics been selected to ensure signal detection and recognition including:

a. cross-system compatibility with functionally similar systems or equipment?

b. sufficient attention gaining and apparent urgency of signal to conform with allocated priority and meaning?

c. sufficient discrimination of each signal from all others in the set?

d. sufficient harmonic components to ensure consistency in perceived sound irrespective of variable degrees of masking by noise?

e. absence of signal modulations (AM or FM) which are close to periodic fluctuations in environmental noise?

f. a preference for temporal patterns in which the signal is modulated at between 0.5 and 4Hz (AM or FM) and presented as bursts of sound or pulses separated by relatively long intervals.

9.2.5 Tests, Trials and Evaluation

Practical tests, trials and evaluations must form the final basis for evaluation. In this context, are sufficient resources available to ensure that:

a. a test panel of at least 10 user representative listeners is used?

b. the ambiguity, attention gaining and urgency aspects of signals are tested on skilled personnel carrying out normal duties?

c. real or simulated equipment is available for trained personnel to use during tests, trials and evaluations?

d. all intended auditory signals are tested for mutual compatibility and discrimination?

e. listener tests are carried out in real or simulated conditions of ambient and background noise, and if appropriate, speech and other auditory signals which are sounded simultaneously or close by?

f. the design permits easy and relatively low cost changes in the components generating the auditory signals, thus facilitating response to the results of trials and evaluation?

g. similar flexibility is built into production models to permit adaption to either new or changing operational conditions?

9.3 Definitions

9.4 Definitions Related to Visual Information Displays

For the purpose of the visual display section, the definitions described below apply.

Achromatic (displays). Displays generating colours that are perceived to be without hue. The colour names grey, black and white are commonly used.

Advisers. A type of status indicator used to inform the operator of a condition or state that requires general awareness of a marginal or predicted imminent condition.

Alarm. A type of status indicator used to inform the operator of a hazardous condition or state.

Ambient illumination. General level of illumination at the workstation.

Anisotropic (display surface). A display surface for which radiation deviates from that of a Lambertian surface (see IEC 845-04-57) by more than 10% at any inclination angle 0 < 45°.

Attenson. A sound used to inform.

Auditory cue. A sound designed to prompt the operator for a specific action.

Brightness. The subjective response to luminance in the field of view dependent upon the adaptation of the eye.

Candela (cd). The SI unit of luminous intensity, equal to one lumen per steradian.

Caution. A type of status indicator used to inform the operator of a condition or state that requires immediate attention and a rapid remedial action. See also Advisers; Warnings.

Chromostereopsis. Stereopsis results from the shorter wavelength light being refracted more than longer wavelength as it passes through the eye and focuses on the retina. This leads to a perceived difference in distance of different coloured objects from the eye (also known as Depth Effect).

CLOS (operation). A type of tracking system, ‘command-to-line of sight’, in which the controlled device (e.g. missile path) follows the operator’s command.

Code (visual). A systematic technique for representing information used to aid comprehension. Codes can be used to speed interpretation, or to make presentation of the information more efficient (e.g. by reducing the size). Codes can also be used to add to, or modify the meaning of the information.

Contrast. A term that is used subjectively and objectively. Subjectively it describes the difference in appearance of two parts of a visual field seen simultaneously or successively. The difference may be one of brightness or colour or both. Objectively, the term expresses the luminance difference between the two parts of the field by such relationships as the difference between the luminance of the target and background, e.g. expressed as a ratio:

Where L_{max} and L_{min} luminance represent the maximum and minimum luminances in cdm^{-2}, respectively, i.e. the luminances of the target and background.

$$\text{Contrast Ratio, } C_R = \frac{L_{max}}{L_{min}}$$

Contrast sensitivity: The ability to perceive a lightness or brightness difference between two areas. See also Def Stan 00-25 (Part 25).

Control display dynamics: The spatial relationship between the control input and the display output.

CRT: Cathode ray tube.

'Dark quiet' (design philosophy): Status indicator design philosophy in which the displayed information is not visible or audible until directly relevant.

Depth Effect. See chromostereopsis.

Descenders (in text). Elements of lowercase letters that extend below the baseline, e.g. on the letters g, p, j, y.

Diacritic. A modifying mark near or through a letter indicating a phonetic value different from that given the unmarked letter, e.g. a cedilla in 'façade'.

Diffuse reflection. Reflection in which the reflected light is diffused and there is no significant specular reflection, as from a matt paint.

Discrimination. The detection of difference between stimuli (e.g. for colour – detection of chromatic difference between visual stimuli.)

Display (visual). The type of information medium that is relevant to, and observed by, the human sense of sight.

Display modality. The human perceptual sense through which the display stimulus is perceived, e.g. visual, auditory, tactile, olfactory.

Dot matrix. A system of displaying characters within a given matrix of dots, often 7 x 9 or 5 x 7.

Duty cycle. The ratio of the active display interval compared versus the flashing interval, of a flashing stimulus, expressed as a percentage. See also Flash Coding.

Effective reflectance. Estimated reflectance of a surface, based on the relative areas and the reflectances of the materials forming the surface. Thus, 'effective wall reflectance' takes account of the reflectances of the wall surface, the windows, the filing cabinets etc, that comprise the sides of the room.

Emissive (displays). Displays that contain their own light source(s). The light is either produced by the transducer itself or provided by one or more internal light sources modulated by the transducer.

Flash coding. Information presented by temporal luminance variations, sometimes referred to as blink coding. See also Duty Cycle.

Flat panel displays (FPDs). Various types of electronic displays presenting information on a thin panel, e.g. Liquid Crystal Display (LCD), Electroluminescent Display (ELD), Gas Plasma Display (GPD), Vacuum Fluorescent Display (VFD).

Flicker. Visible modulation of luminous flux. Also referred to as temporal instability.

Frankfort Plane. An imaginary plane through the head established by the lateral extensions of a line between the tragion (centre of the ear, in profile) and the lowest point of the orbit (bottom of the eye in profile).

Glare. The discomfort on impairment of vision experienced when parts of the visual field are excessively bright in relation to the general surroundings.

Head/Helmet Mounted Display (HMD). A type of display, often mounted upon or within the operator's protective helmet, incorporating a miniature FPD or HUD.

Head-Up Display (HUD). A type of display incorporating a part-reflective panel ('combiner') upon which the displayed image is projected, allowing the operator to view the image and background together.

Hierarchical Task Analysis (HTA). A method of hierarchically decomposing operator goals into tasks and sub-tasks for analysing design and training requirements.

Hue. The term that most closely resembles our notion of 'colour', for example, red, green and blue. It is that quality of a colour that cannot be accounted for by brightness or saturation differences. An objective measure of hue is provided by the dominant wavelength of that colour's spectral power distribution.

Illuminance (E, units: 1 m/m^2, lux). The luminous flux density at a surface, i.e. the luminous flux incident per unit area. This quantity was formerly known as the illumination value or illumination level.

Immersive (display). A type of display through which the operator is presented with a virtual visual environment - either generated or a remote real environment - that responds appropriately to head movements, using display devices close to each eye.

Luminance (L, unit: cdm^2). The physical measure of the stimulus which produces the sensation of brightness measured by the luminous intensity of the light emitted or reflected in a given direction from a surface element, divided by the projected area of the element in the same direction. The SI unit of luminance is the candela per square metre. The relationship between luminance and illuminance is given by the equation:

$$\frac{\text{Illuminance x Reflectance factor}}{\Pi}$$

This equation applies to a matt surface. For a non-matt surface, the reflectance is replaced by the luminance factor. The luminance of the sky (and other sources that cannot be visualized as surfaces) may be described in terms of the illuminance produced on a surface.

Mnemonics. Letter-based code, e.g. acronym - a word comprising the initial letter of a sequence of other words.

Monochrome (displays). Displays perceived as having hue but that use luminance alone to differentiate between pixel states.

NBC. Nuclear, Biological and/or Chemical (hazard, protection state or event).

Operator. Person qualified to use the visual display and employed in the target role.

Pictogram. Simplified representational depiction of concrete visual objects.

Pitch Ladder. Display symbology used to indicate pitch and roll attitude of aircraft. Lines or bars are used to represent pitch angles, hence the apparent similarity to ladder rungs.

Pixel. The smallest addressable display element that is capable of generating the full colour and/or luminance ranges of the display.

Polarity. The relationship between the background brightness and image brightness. The presentation of brighter images on a darker background is designated negative polarity, and darker images on a brighter background is designated positive polarity.

Pursuit reflex. A physiological mechanism that provokes the eyes to track moving images.

Redundant coding. Additional coding, used to enhance the salience of the coded information.

Referent ('real world'). The reference object or concept depicted by a symbol, pictogram or metaphorical construct.

Reflectance (factor (R, ρ). The ratio of the luminous flux reflected from a surface to the luminous flux incident on it. Except for matt surfaces, reflectance depends on how the surface is illuminated but especially on the direction of the incident light and its spectral distribution. It is expressed as either a decimal or as a percentage.

Representational display. A display that presents a representation of ‘real-world’ objects or concepts, often using pictograms and symbols.

Scotopic vision. The performance of the dark-adapted visual system.

Soft-key. A key for which the function may be changed according to software control. Sometimes, but not always associated with a software-controlled indicator of current function.

Specular reflection. Reflection without diffusion in accordance with the laws of optical reflection as in a mirror.

Status indicator. A display of discrete, separate, qualitative information.

Stroke Width. The width of a single line drawn on the display. Since the luminance distribution of the edge will be a blur, and not a sharp edge, the edge is defined as the 50% luminance point of the blur.

Task analysis. A structured method for analysing the design and training requirements of an item of equipment based upon the operator's goals and tasks that the equipment is intended to support.

Three Letter Abbreviation (TLA). A common form of coding for military terminology, e.g. 'AAM': Air-to Air Missile. Not all TLAs are acronyms, e.g. 'AWX': All Weather Fighter, and the same TLAs can have different meanings for different Units and in different contexts, e.g. 'TOT' which means 'Time On Target' to Artillery and 'Time Over Target' to Aircraft.

Transient adaptation. The repeated response of the visual system when the operator is alternately exposed to variation in the brightness or colour in the visual field.

Typographical cue. A method of highlighting displayed text, such as underlining.

Veiling reflection. See Diffuse reflection.

Visual acuity. The capacity for discriminating between objects which are very close together. Quantitatively, it can be expressed by the reciprocal of the angular separation in minutes of arc between two lines or points which are just separable by the eye. The expression more commonly used for an individual's visual acuity is the ratio of the distance at which the individual can read a line on a standard optician's chart to the standard distance at which a person of normal sight can read that line (e.g. 6/12 means that the individual can just read at 6 m the line which a normally sighted person can just read at 12 m).

Visual disability. A disability is any restriction or lack (resulting from an impairment) of ability to perform an activity in the manner or within the range considered normal for a human being.

Visual environment. The environment either indoors or outdoors as seen by an observer.

Visual field. The full extent in space of what can be seen when looking in a given direction.

Visual impairment. A loss or abnormality of psychological, physiological, or anatomical structure or function of the visual system.

Visual task. The visual element of the work being done.

Virtual environment. The notional environment generated by an immersive display which presents information in such a way as is appropriate to give the operator the perception of viewing and interacting with objects in three-dimensional surroundings.

Warning. A type of status indicator used to inform the operator *in advance* of a condition or state that requires immediate attention and immediate action. See also: Adviser; Alarm; Caution.

9.5 Definitions Related to Auditory Information Displays

For the purpose of the terms used in the auditory displays section, the definitions in BS 4727-3(8): 1995 apply together with those listed in this section.

Absolute threshold. For a given individual, the threshold of audibility of a specified sound in the absence of other sounds.

Advisory Signal. A category four auditory signal. For aircraft, Def Stan 00-970 states that an advisory signal is 'A signal used to indicate aircraft configuration, a condition of performance, the operation of essential equipment or to attract attention for routine purposes'. On substitution of 'equipment' for 'aircraft', this definition is acceptable for wider use.

Alarm. The term 'alarm' is avoided in this Part of this Standard, except when linked to a specific situation, e.g. 'Fire Alarm'). For ships, Def Stan 02-599 states that "An ALARM denotes that an emergency situation has arisen, which endangers the ship, its personnel, or essential equipment and for which an immediate decision or action must be taken. An alarm signal may be required when an essential equipment has malfunctioned and the effect of the malfunction is not otherwise readily and immediately apparent".

Alarm and Warning System. That system which is used to provide a co-ordinated and controlled indication of alarms and warnings, in a ship or submarine, at such positions that the correct decision and/or action can be taken within an appropriate time (Def Stan 02-599).

Ambient Noise. Encompassing sound (at a given place), being usually a composite of sounds from any sources, near and far.

Attenson. The initial, non-verbal and attention gaining component of an auditory signal which subsequently contains speech.

Audible Signal. An audible sound which is distinct from other sounds in a specified environment and audible to all listeners, who either associate with it a specific meaning, or who may learn to do so.

Auditory Signal. A sound, the physical characteristics of which are distinct from those of others but which is not necessarily audible to all potential listeners.

Auditory Signal Systems. That system which is used to provide a co-ordinated and controlled indication of a signal set, at such positions that the correct decision and/or action can be taken within an appropriate time. (Def Stan 02-599)

Background Noise. Total of interference from all sources in a system used for the production, transmission, detection, measurement or recording of a signal.

Category One Auditory Signal. A sound denoting that a critical state exists; emergency action is required of all personnel in the affected locations/environments.

Category Two Auditory Signal. A sound denoting that immediate danger exists; specific and immediate action is required of selected personnel; for others current operational duties continue.

Category Three Auditory Signal. A sound denoting that abnormal conditions exist or danger is imminent; immediate awareness is required of selected personnel followed by early but not necessarily immediate action.

Category Four Auditory Signal. A sound denoting that conditions are within normal limits; awareness is required, but not necessarily action; normal duties continue.

Category Five Auditory Signal. A sound denoting that conditions have returned to normal; normal duties are to be resumed.

Cautionary Signal. A category three auditory signal. For aircraft, Defence Standard 970 defines it as 'A signal indicating the existence of a hazardous or impending hazardous condition requiring attention and early but not necessarily immediate action'. On the inclusion of 'an abnormal condition not covered by a warning signal', or 'after existence of', this definition is suitable for wider use.

Complex Signal. An auditory signal, usually digitized, which permits easy manipulation of sound level, frequency content, or temporal pattern in an auditory signal system.

Confidence Signal. An advisory signal driven from repetitively successful outputs from built-in test equipment. BITE is used in a critical situation to indicate that an equipment is on and working correctly, when that information is not available reliably, readily and immediately to the human operator. For example, the Confidence Signal produced by a hand-held mine detector may reduce apprehension and thus potential human errors.

Emergency Evacuation Signal. A category one auditory signal (see BS ISO 7731: 2001). It is used to indicate the beginning or the actual occurrence of an emergency involving the possibility of injury and instructing the person(s) to leave the danger zone in the recognized manner.

Environmental Noise. The total acoustic noise from all sources in the auditory signal reception area, usually the sum of ambient and, if any, background noise.

Equipment. A generic term used in this Standard to cover all products designed or produced for the MOD, including for example, weapons, vehicles and buildings.

False Alarm. A term used to indicate an auditory signal correctly generated in response to an environmental factor other than the intended cause for the particular signal.

False Alert. The sounding of an auditory signal erroneously by equipment.

Fault Warning. An auditory signal indicating a fault in the equipment. The criticality of the fault determines the category of signal to be used.

Hertz (Hz). SI unit of frequency, indicating the number of cycles per sec (c/s).

Intensity. The magnitude of a sound's power or pressure, subjectively perceived as loudness.

Listener (Group). All the Users involved in the reception zone of an auditory signal, or a group of at least 10 subjects chosen to be representative of the age structure, and to include those with the worst hearing acuity encountered in the zone.

Masking. The process by which the threshold of audibility of one sound is raised by the presence of another (masking) sound. Also the amount by which the threshold of audibility of one sound is raised by the presence of another (masking) sound. Usually expressed in decibels.

Masked threshold. The threshold of audibility for a specified sound in the presence of another, masking, sound.

Master Auditory Signal. An auditory signal used to draw attention to a group of related and closely located visual displays, which provide additional information. Either or both master warning signals and master cautionary signals are acceptable as permitted under Defence Standard 00-970, or a common master auditory signal attracting attention to visual displays of category two and three information, e.g. in ships as required under Def Stan 02-599.

Octave.

a. The tone whose frequency is twice that of the given tone.
b. The interval of an octave, together with the tones included in that interval.
c. Three-tenths of a decade, a decade being a frequency interval of 10:1.

One-third octave. A frequency interval whose upper frequency is 2 exp 1/3 times the lower frequency. Now in acoustics, third-octaves are, in fact, one-tenth decades in which the upper frequency is $10^{0.1}$ times the lower. Tenth decades are about 99.9% of a third-octave bandwidth, so the difference is negligible. The advantage is that tenth decades can take a more convenient series of centre frequencies.

Pink Noise. Noise whose power spectral density is inversely proportional to frequency.

Pulse. A short burst of acoustic noise.

Pulse Sequence. A specific pattern of repeated pulses.

Pulse Train. A pattern of pulse sequence repeated at intervals, into which suitable voice components may be inserted.

Resonance. The resulting vibration of a system when subjected to an applied force. The resonant frequency is that at which a given system will tend naturally to vibrate (resonate) with greatest amplitude.

r.m.s. Measure of any alternating waveform, the square root of the mean of the squares of continuous ordinates through one complete cycle.

Sequence. See pulse Sequence.

Set. See signal Set.

Signal. A detectable oscillation in a medium, in the context of this Part of this Standard an audible sound, which is capable of carrying information.

Signal Pulse. See Pulse Sequence.

Signal Category. A class of auditory signals intended for specified groups of listeners.

Signal Set. Denotes all the auditory signals used to transmit information to a person or a group of personnel.

Sinusoidal. An alternating quantity is said to be sinusoidal when its waveform, plotted to a linear time base, is a sine wave.

Sound Pressure Level. The Sound Pressure Level of a sound, in decibels, is equal to 20 times the logarithm to the base 10 of the ratio of the r.m.s. sound pressure (p) to the reference sound pressure (P_0).$L_p = 20 \text{ Log } (p/p_0)$ dB

Sounder. A device which converts electrical (audio) signals into auditory signals.

Warning. For ships, Def Stan 02-599 states that, "A warning indicates and draws attention to abnormal conditions not covered by an alarm for which early remedial action is required. In this context it may be used to indicate a condition outside of selected limits". In order to avoid ambiguity in this Part of this Standard the term 'Warning' is not used in lieu of 'Warning Signal' nor in lieu of 'Cautionary Signal'.

Warning Signal. A sound indicating the existence of an emergency condition requiring immediate decision and/or action to avoid delay or reduce potential loss of life, equipment or operational effectiveness (a category two auditory signal). For aircraft, Defence Standard 00-970 defines it as "A signal indication the existence of an imminent catastrophic condition requiring immediate action or a limitation of the flight envelope of the aeroplane".

White Noise. Noise whose power spectral density is essentially independent of frequency.

9.5.1 Nomenclature for Alarms and Warnings

For ships, auditory signals are defined in Def Stan 02-599 and for aircraft, 3 categories of auditory signal are defined in Defence Standard 00-970 and STANAG 3370. Different nomenclatures are apparent in these documents for the meaning of 'Warning'. It is emphasized however that there is consistency between naval and air Standards in the priority

allocated to auditory signals of similar category but of different name. (For definitions of categories of auditory signals see Part 25.)

9.6 References

9.7 References Relating to Visual Displays

[306] BS 5499-5:2002 Graphic symbols and signs. Safety signs, including fire safety signs. Signs with specific safety meanings.

[307] BS 5499-6:2002 Graphic symbols and signs. safety signs, including fire safety signs. Creation and design of graphical symbols for use in safety signs. Requirements.

[308] Health and Safety Commission. Display Screen Equipment Work, Health and Safety (Display Screen Equipment) Regulations 1992, Guidance on Regulations L26 (1992)

[309] ISO 9241-3:1992, EN 29241-3:1993 Ergonomic Requirements for Office Work with Visual Display Terminals (VDTs). Part 3 Visual Display Requirements

[310] IEC 845-04-57: (CIE 17.4) International Lighting Vocabulary, International Electrotechnical Commission

[311] ISO 2575: 1995, BS AU 143f Road Vehicles, Symbols for Controls, Indicators and Tell-tales

[312] BS ISO 2631-4:2001 Mechanical vibration and shock. Evaluation of Human Exposure to Whole-body Vibration. Guidelines for the evaluation of the effects of vibration and rotational motion on passengers and crew comfort in fixed-guideway transport systems

[313] ISO 7000:1989 Graphical Symbols for Use on Equipment

[314] BS EN ISO 9241-1:1997 Ergonomic Requirements for Office Work with Visual Display Terminals (VDTs). Part 1 General Introduction

[315] BS EN ISO 10075-1:2000 Ergonomic Principles Related to Mental Workload. General terms and definitions

[316] BS EN ISO 10075-2:2000 Ergonomic Principles Related to Mental Workload. Design Principles.

[317] BS EN ISO 9241-7:1998 Ergonomic Requirements for Office Work with Visual Display Terminals (VDTs). Part 7 Display Requirements with Reflections

[318] BS EN ISO 9241-8:1998 Ergonomic Requirements for Office Work with Visual Display Terminal (VDTs). Part 8 Requirements for Displayed Colours

[319] BS EN ISO 13406-1:1999. Ergonomic requirements for work with visual displays based on flat panels – Introduction.

[320] BS EN 842:1996. Safety of machinery. Visual danger signals. General requirements, design and testing

[321] BS EN 981:1997. Safety machinery. System of auditory and visual danger and information signals

[322] BS EN ISO 13406-2:2002. Ergonomic requirements for work with visual displays based on flat panels. Ergonomic requirements for flat panel displays

[323] BS EN ISO 8468:1995. Ships bridge layout and associated equipment – requirements and guidelines

[324] BS EN ISO 9241-4:1998. Ergonomic requirements for office work with visual display terminals. Keyboard requirements

[325] BS EN ISO 9241-17:1998. Ergonomic requirements for office work with visual display terminals. Form filling dialogues

[326] BS EN ISO 9241-16:1999. Ergonomic requirements for office work with visual display terminals. Direct manipulation dialogues

[327] BS EN ISO 9241-15:1998. Ergonomic requirements for office work with visual display terminals. Command dialogues

[328] BS EN ISO 9241-14:2000. Ergonomic requirements for office work with visual display terminals. Menu dialogues

[329] BS EN ISO 9241-13:1999. Ergonomic requirements for office work with visual display terminals. User Guidance

[330] BS EN ISO 9241-12:1999. Ergonomic requirements for office work with visual display terminals. Presentation of information

[331] BS EN ISO 9241-11:1998. Ergonomic requirements for office work with visual display terminals. Guidance on usability

[332] BS EN ISO 9241-6:2000. Ergonomic requirements for office work with visual display terminals. Environmental requirements

[333] BS EN ISO 9241-2:1992. Ergonomic requirements for office work with visual display terminals. Guidance on task requirements

[334] BS EN ISO 14915-1:2002. Software ergonomics for multimedia user interfaces – Part 1: Design principles and framework

[335] BS EN ISO 14915-3:2002. Software ergonomics for multimedia user interfaces – Part 3: Media selection and combination

[336] 99/561489 DC. BS ISO 3864-1. Safety colours and safety signs. Part 1. Safety signs in workplaces and public areas. Design principles (ISO 3864-1) system interfaces and symbols – Icon symbols and functions Part 6: Action icons

[337] ISO 11428:1996. Ergonomics – visual danger signals – general requirements, design and testing

[338] BS 7517:1995, IEC 61227:1993. Nuclear power plants. Control rooms. Operator controls

[339] BS 5378-2:1980. Safety signs and colours. Specification for colorimetric and photometric properties of materials

[340] BS 5817-8:1990, IEC 60574-16:1987. Specification for audio-visual, video and television equipment and systems. Symbols and identification

[341] BS 7324:1990, ISO 7000:1989. Guide to graphical symbols for use on equipment

[342] Card, S. K., Mackinlay, J. D, and Schnierderman, B.1999 Readings in Information Visualization: Using Vision to Think: Morgan Kaufmann Publishers

[343] ISO/IEC 10741-1:1995. Information technology – User system interfaces – Dialogue interaction Part 1 Cursor control for text editing

[344] ISO/IEC 11581-1:2000. Information technology – User system interfaces and symbols – Icon symbols and functions Part 1: Icons – General

[345] ISO/IEC 11581-2:2000. Information technology – User system interfaces and symbols – Icon symbols and functions Part 2: Object icons

[346] ISO/IEC 11581-3:2000. Information technology – User system interfaces and symbols – Icon symbols and functions Part 3: Pointer icons

[347] ISO/IEC 11581-6:1999. Information technology – User system interfaces and symbols – Icon symbols and functions Part 6: Action icons

[348] The International Hydrographic Organization (1987). 'Electronic Chart Display Systems' Draft Proposals.

[349] ASTM F1166-95a: 2000. Standard practice for Human Engineering design for marine systems, equipment and facilities

[350] STANAG 3705 AI. Human Engineering design criteria for aircrew station controls and displays

[351] ANEP 27 (NATO MAS), Edition 1. Human Factors guidelines for the design of MMIs in Operational Rooms

[352] STGP 11. STG 2002 ISSUE 3. HFI Technical Guide

[353] Def Stan 02-575: 2000. Guide to design of closed circuit television and surveillance equipment

[354] Def Stan 02-707 Part 1: 2000. Symbols and abbreviations. Guide to the general use of symbols

[355] Def Stan 02-707 Part 2: 2000. Symbols and abbreviations. Guide to abbreviations and system code letters

[356] Def Stan 02-784: 2000. Requirements for safety signs and colours

[357] Def Stan 07-238: 2000. Guide to design of training and recreational television systems

[358] Def Stan 08-111: 2000. Requirements for the design of a user interface to Electronic Damage Control Information Displays

[359] Mil-Std-1472F: 1999. US DoD Design Criteria Standard – Human Engineering

[360] Mil-Std-1477C: 1996. Interface Standards: Symbols for Army Systems Displays

[361] Mil-Std-1787C: 2001. Aircraft Display Symbology

[362] Mil-Std-2525B: 1999. Common Warfighting Symbology

[363] NASA-STD-3000: 1995. Man-Systems Integration Standards Volumes 1 and 2

[364] IEEE Guide for the application of human factors engineering in the design of computer-based monitoring and control displays for nuclear power generating stations

[365] Maybury, T. (Ed.) (1993). Intelligent Multi Media Interfaces. AAAI Press/MIT Press

[366] Military Symbols for Land Based Systems, NATO Publication APP6(A)

[367] MOD MANPRINT Handbook, 2nd Edition (1992)

[368] Preece, J. et al (1994). Human-Computer-Interaction. Addison Wesley

[369] PULHHEEMS Administrative Pamphlet (2000) Army Code No 13371

[370] Sanders, M. S., and McCormick, E. J. (1993). Human Factors in Engineering and Design (7th Ed). McGraw-Hill International

[371] Salvendy, G. (1997) Ed. Handbook of Human Factors and Ergonomics. 2nd Ed. Wiley-Interscience Publishers

[372] Staff Officers Handbook (2002) Army Code No 71038

[373] BS ISO 9186:2001 Graphical symbols. Test methods for judged comprehensibility and for comprehension

[374] Tufte, E.R. (1990). Envisioning Information. Cheshire, CT: Graphics Press

[375] Wickens, C, D. (1992) Engineering Psychology and Human Performance. 2nd Ed. Harper Collins Publishers

[376] Woodson, W. E., Tillman, B. and Tillman, P. (1992). Human Factors Design Handbook (2nd Ed). McGraw-Hill International

9.8 References Relating to Auditory Displays

International Standards

[377] IEC 225, Octave, ½ octave + 1/3 octave band filters for the analysis of sound and vibrations, first edition. International Electrotechnical Commission.

[378] BS EN ISO 266:1997, Acoustics. Preferred frequencies.

[379] BS ISO 7731:2001, Ergonomics: Danger signals for public and work places – Auditory danger signals.

British Standards

[380] BS EN ISO 7029:2000. Acoustics. Statistical distribution of hearing thresholds as a function of age.

[381] BS 4727: PART 3: GROUP 08: (1995) Glossary of Electrotechnical power, telecommunication, electronics, lighting and colour terms. Terms particular to telecommunications and electronics. Acoustics and electro-acoustics.

[382] BS EN 60651:1994 Specification for Sound Level Meters.

[383] BS EN 457:1992. Safety of machinery. Auditory danger signals. General requirements, design and testing.

[384] BS EN 981:1997. Safety machinery. System of auditory and visual danger and information signals

[385] BS ISO 9921-1:1996. Ergonomic assessment of speech communication. Speech interference communication distances for persons with normal hearing capacity in direct communication (SIL Method)

[386] 01/564713 DC. BS ISO 9921 Ergonomics. Assessment of speech communication

[387] 88/38160 DC. Ergonomic principles for the design of signals (ISO/DIS 9335)

[388] BS 5817-8:1990, IEC 60574-16:1987. Specification for audio-visual, video and television equipment and systems. Symbols and identification

[389] Defence Standard 00-970: (1983) Design requirements for Service aircraft: Vol. 1: Chapter 105. Crew Stations – General requirements.

[390] ASTM F1166-95a: 2000. Standard practice for Human Engineering design for marine systems, equipment and facilities

[391] Def Stan 02-556: 2001. Guide to design and user requirements of internal communication equipment

[392] Def Stan 02-599: 2001. Policy requirements and design guidance for alarms and warning systems

[393] Mil-Std-1472F: 1999. US DoD Design Criteria Standard – Human Engineering

NATO Standardization Agreements

[394] STANAG 3370: 21 February 1974. Aircrew station warning, cautionary and advisory signals. North Atlantic Treaty Organization, Military Agency for Standardization.

Naval Engineering Standards

[395] Sea Systems Controllerate of the Navy.

[396] Broadbent, D.E. (1958). Perception and Communication. Pergamon Press, London.

[397] Broadbent, D.E. (1979). Effects of Noise on Behaviour. In: C M Harris (ed) Handbook of noise control. 2nd edition. McGraw Hill, New York.

[398] Coleman, G.J. et al (1984). Communications in nosy environments. Institute of Occupational Medicine, Edinburgh, TM84/

[399] Coleman, G.J. (1979). Determination of sound pressure levels for acoustic warning signals in quiet conditions. Institute of Occupational Medicine, Edinburgh: Ergonomics Branch Report ER/79/01.

[400] Coombe Lt Col, D.H. (1980). The implications of the Army's audiometric screening programme: Part II: Hearing acuity in British Army recruits. Journal of the Royal Army Medical Corps 126, 25-32

[401] Doll, T.J. and Folds, D.J. (1986). Auditory signals in military aircraft: ergonomics principles versus practice. Appl Erg 17(4) 257-264.

[402] Du Ross, S.H. (1978). Civil aircraft warning systems – a survey of pilot opinion within British Airways. Royal Aircraft Establishment. Tech Rpt 78056.

[403] Patterson, R.D. (1982). Guidelines for auditory warning systems on civil aircraft. Civil Aviation Authority Paper CAA 82017.

[404] Patterson, R.D. (1990). Auditory Warning Sounds in the Work Environment. In Human Factors in Hazardous Situations, Edited by D.E. Broadbent, J. Reason and A. Baddeley. Clarendon Press, Oxford pp 37-44

[405] Patterson, R.D., Datta, A.J. (1996). Extending the Frequency Range of Existing Auditory Warnings. Proceedings of the AGARD AeroMedical Panel, 82nd Meeting, Copenhagen, October 1996, Paper 8

[406] Rood, G.M. (1984). Predictions of auditory masking in helicopter noise. Proceeding of the 10th European rotocraft forum August 28-31, The Hague, Netherlands (see also

[407] Cogger, M.K. and Chillery, J.A. (1980) Measurement of the acoustic attenuation of flight helmet earshells. Royal Aircraft Establishment Technical Memorandum FS 352).

[408] US Department of Defence (1999). Military Standard: Human Engineering design criteria for military systems, equipment and facilities. MIL-STD 1472F.

[409] Kirwan, B. and Ainsworth, L. K. (Eds) (1992). A Guide to Task Analysis. Taylor & Francis

[410] Schubert, E.D. (1978..) History of research on hearing. In: Carterette E C and Friedman M P (Ed). Handbook of Perception. Vol. IV Hearing. Academic Press, New York.

[411] STANAG 3647 Edition 3 Nomenclature in Air Crew Stations, NATO

[412] BS 5499-1: 2002 Graphic symbols and signs. Safety signs, including fire safety signs. Specification for geometric shapes, colours and layouts.

[413] BS 5499-2:1986 Fire safety signs, notices and graphic symbols. Specification for self-luminous fire safety signs.

[414] BS 5499-3:1990 Fire safety signs, notices and graphic symbols. Specification for internally illuminated fire safety signs.

[415] BS 5499-4:2000 Safety signs, including fire safety signs. Code of practice for escape route signing.

[416] Maybury, T. (Ed.) (1993). Intelligent Multi Media Interfaces. AAAI Press/MIT Press

[417] Morris, C.H., and Leung, Y.K. (1999). An Empirical Study of Auditory Warnings in Aircraft. Human-Computer Interaction INTERACT '99, Volume I, Edited by M.A. Sasse and C. Johnson. IOS Press, Amsterdam.

[418] Sanders, M.S., and McCormick, E.J. (1993). Human Factors in Engineering and Design (7th Ed). McGraw-Hill International

[419] Weinger, M.B. (2000). Auditory Warnings in the Medical Work Domain: An Overview of Critical Issues. Proceedings of the XIVth Triennial Congress of the International Ergonomics Association and 44th Annual Meeting of the Human Factors and Ergonomics Society, San Diego, California, USA, July 29-August 4, 2000. Human Factors and Ergonomics Society, Santa Monica, California, USA, Volume 1.

[420] Wilkins P A (1981). Assessing the effectiveness of auditory warnings. British Journal of Audiology 15 263-274

[421] Woodson, W.E., Tillman, B. and Tillman, P. (1992). Human Factors Design Handbook (2nd Ed). McGraw-Hill International

9.9 Other Useful References

[422] BS EN ISO 13406-1:1999. Ergonomic requirements for work with visual displays based on flat panels – Introduction.

[423] BS EN 457:1992. Safety of machinery. Auditory danger signals. General requirements, design and testing.

[424] BS EN 842:1996. Safety of machinery. Visual danger signals. General requirements, design and testing

[425] BS EN 981:1997. Safety machinery. System of auditory and visual danger and information signals

[426] BS EN ISO 13406-2:2002. Ergonomic requirements for work with visual displays based on flat panels. Ergonomic requirements for flat panel displays

[427] BS EN ISO 8468:1995. Ships bridge layout and associated equipment – requirements and guidelines

[428] BS EN ISO 9241-4:1998. Ergonomic requirements for office work with visual display terminals. Keyboard requirements

[429] BS EN ISO 9241-17:1998. Ergonomic requirements for office work with visual display terminals. Form filling dialogues

[430] BS EN ISO 9241-16:1999. Ergonomic requirements for office work with visual display terminals. Direct manipulation dialogues

[431] BS EN ISO 9241-15:1998. Ergonomic requirements for office work with visual display terminals. Command dialogues

[432] BS EN ISO 9241-14:2000. Ergonomic requirements for office work with visual display terminals. Menu dialogues

[433] BS EN ISO 9241-13:1999. Ergonomic requirements for office work with visual display terminals. User Guidance

[434] BS EN ISO 9241-12:1999. Ergonomic requirements for office work with visual display terminals. Presentation of information

[435] BS EN ISO 9241-11:1998. Ergonomic requirements for office work with visual display terminals. Guidance on usability

[436] BS EN ISO 9241-8:1998. Ergonomic requirements for office work with visual display terminals. Requirements for displayed colours

[437] BS EN ISO 9241-7:1998. Ergonomic requirements for office work with visual display terminals. Display requirements with reflections

[438] BS EN ISO 9241-6:2000. Ergonomic requirements for office work with visual display terminals. Environmental requirements

[439] BS EN ISO 9241-3:1992. Ergonomic requirements for office work with visual display terminals. Visual display requirements

[440] BS EN ISO 9241-2:1992. Ergonomic requirements for office work with visual display terminals. Guidance on task requirements

[441] BS EN ISO 14915-1:2002. Software ergonomics for multimedia user interfaces – Part 1: Design principles and framework

[442] BS EN ISO 14915-3:2002. Software ergonomics for multimedia user interfaces – Part 3: Media selection and combination

[443] 99/561489 DC. BS ISO 3864-1. Safety colours and safety signs. Part 1. Safety signs in workplaces and public areas. Design principles (ISO 3864-1)

[444] BS 7324:1990, ISO 7000:1989. Guide to graphical symbols for use on equipment

[445] BS ISO 9921-1:1996. Ergonomic assessment of speech communication. Speech interference communication distances for persons with normal hearing capacity in direct communication (SIL Method)

[446] 01/564713 DC: 2002. BS ISO 9921 Ergonomics. Assessment of speech communication

[447] 88/38160 DC. Ergonomic principles for the design of signals (ISO/DIS 9335)

[448] ISO/IEC 10741-1:1995. Information technology – User system interfaces – Dialogue interaction Part 1 Cursor control for text editing

[449] ISO/IEC 11581-1:2000. Information technology – User system interfaces and symbols – Icon symbols and functions Part 1: Icons – General

[450] ISO/IEC 11581-2:2000. Information technology – User system interfaces and symbols – Icon symbols and functions Part 2: Object icons

[451] ISO/IEC 11581-3:2000. Information technology – User system interfaces and symbols – Icon symbols and functions Part 3: Pointer icons

[452] ISO/IEC 11581-6:1999. Information technology – User system interfaces and symbols – Icon symbols and functions Part 6: Action icons

[453] ISO 11428:1996. Ergonomics – visual danger signals – general requirements, design and testing

[454] BS 7517:1995, IEC 61227:1993. Nuclear power plants. Control rooms. Operator controls

[455] BS 5378-2:1980. Safety signs and colours. Specification for colorimetric and photometric properties of materials

[456] BS 5817-8:1990, IEC 60574-16:1987. Specification for audio-visual, video and television equipment and systems. Symbols and identification

[457] ASTM F1166-95a: 2000. Standard practice for Human Engineering design for marine systems, equipment and facilities

[458] STANAG 3705 AI. Human Engineering design criteria for aircrew station controls and displays

[459] ANEP 27 (NATO MAS), Edition 1. Human Factors guidelines for the design of MMIs in Operational Rooms

[460] STGP 11. STG 2002 ISSUE 3. HFI Technical Guide

[461] Def Stan 00-25 Part 14: 2000. Human Factors for Designers of Equipment: Military Land Vehicle Design

[462] Def Stan 02-556: 2001. Guide to design and user requirements of internal communication equipment

[463] Def Stan 02-575: 2000. Guide to design of closed circuit television and surveillance equipment

[464] Def Stan 02-599: 2001. Policy requirements and design guidance for alarms and warning systems

[465] Def Stan 02-707 Part 1: 2000. Symbols and abbreviations. Guide to the general use of symbols

[466] Def Stan 02-707 Part 2: 2000. Symbols and abbreviations. Guide to abbreviations and system code letters

[467] Def Stan 02-784: 2000. Requirements for safety signs and colours

[468] Def Stan 07-238: 2000. Guide to design of training and recreational television systems

[469] Def Stan 08-111: 2000. Requirements for the design of a user interface to Electronic Damage Control Information Displays

[470] Mil-Std-1472F: 1999. US DoD Design Criteria Standard – Human Engineering

[471] Mil-Std-1477C: 1996. Interface Standards: Symbols for Army Systems Displays

[472] Mil-Std-1787C: 2001. Aircraft Display Symbology

[473] Mil-Std-2525B: 1999. Common Warfighting Symbology

[474] NASA-STD-3000: 1995. Man-Systems Integration Standards Volumes 1 and 2

[475] IEEE Guide for the application of human factors engineering in the design of computer-based monitoring and control displays for nuclear power generating stations

[476] Schubert, E. D. (1978). History of research on hearing. In: Carterette E C and Friedman M P (Ed). Handbook of perception: Volume IV Hearing. Academic Press, New York.

[477] Schwab, E. C., Nusbaum, H. C. and Pisoni, D. B. (1985). Some effects of training on the perception of speech. Human Factors 27(4) 395-408.

[478] Simpson, C. A., McCauley, M. E., Roland, E. F., Ruth, J. C. and Williges, B. H. (1985). System Design for speech recognition and generation. Human Factors 27(2) 115-141.

[479] Slowiaczek, L. M. and Nusbaum, H. C. (1985). Effects of speech and pitch contour on the perception of synthetic speech. Human Factors 27(6) 701-712

10 Maintenance and Access Ergonomics [HFE9]

This technical area is concerned with providing data and guidance to optimise maintenance tasks and equipment.

Maintenance and access ergonomics is managed through a maintenance policy detailing maintenance requirements, including a specification to achieve requirement objectives. The policy should also emphasise, for example, the importance of having a maintenance history log to ensure traceability, and to allocate responsibility for maintenance tasks to be performed in different types of locations.

There is considerable overlap with other technical areas, especially within the human factors engineering domain. Specifically, this Section overlaps with the following:

a. Physical Characteristics [P3];
b. Clothing Increments [P4];
c. Personal Equipment Envelope [P5];
d. Workspace Design [HFE3];
e. Information Displays [HFE8];
f. System Safety [SS4].

This Section was created in August 1988 and edited in August 2003.

10.1 Introduction

The main aim of this Part of the Standard is to help designers to be aware of the human factors in the maintenance concept within the pre-design requirements of a project. For the purpose of this Standard the hierarchical terms are:

The highest level:	Materiel/Equipment/System	An 'Item' could be any of these
	Unit/Subsystem	
The lowest level:	Component/Part	

10.2 Scope

This Part of the Standard provides information and guidance on human related requirements in maintenance of equipment. In addition, issues which affect the maintainer as a user are described in the context of their consideration during the design stage.

10.3 Technical Guidance

10.3.1 Maintainability

The designer should design with maintainability in mind, so that maintenance may be carried out as far as possible in an efficient and user friendly manner.

The following are the aspects of maintainability and maintenance where human factors can start to be involved in the design concept.

a. Requirements: A statement of the principal means and frequency of preventing an item from failing or of restoring its function when it has failed.

b. Policy: A strategy within which decisions on maintenance are taken.

c. Management: The organization of maintenance within agreed policy.

These are described further in the next section.

10.3.1.1 Maintenance Requirements

A complete statement of maintainability requirements that include maintenance and Human Factors should cover the following elements:

a. A plan for human factors as an integral part of an equipment/systems project throughout the whole life cycle.

b. The plan may include a maintainability design study supported by reviews (see Def Stan 00-40 and BS 6548). Figure 10.3:1 illustrates the human factors involvement and some of the tasks at the start of the design concept;

c. maintainability characteristics to be achieved by the item design;
d. constraints to be placed on the deployment that will affect the item's maintenance;

e. maintainability programme requirements to be accomplished by the supplier to ensure that the delivered item has the required maintainability characteristics;

f. provision of maintenance support planning;

g. expected population type training level for maintainers and the number of maintainers required at set levels;

h. type of maintenance for set levels;

i. test equipment, tooling, handbooks, diagrams, instructions etc;

j. a maintainability specification, detailing the requirements and the method of achieving them, to include proper references to definitions of terms used and, as needed, a list of special terms.

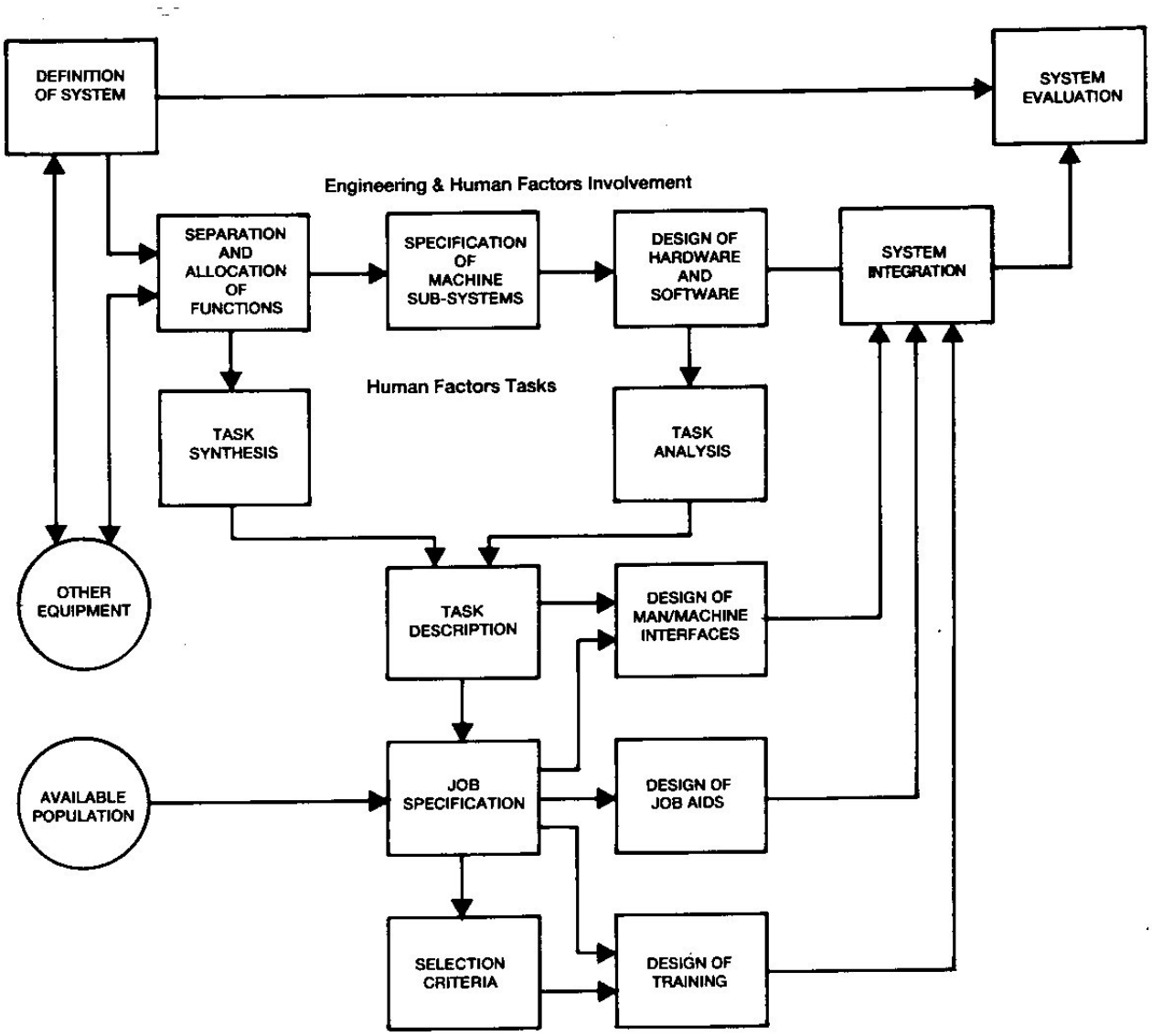

Figure 10.3:1: Human Factors at the Design Stage

10.3.1.2 Maintenance Policy

The following questions that affect maintenance strategy should be asked:

a. Preventive maintenance: Is preventive maintenance in the form of servicing a design feature?

b. Front line maintenance: Who does the front line maintenance when an item breaks down in the middle of nowhere?

c. Repair: How is the item repaired or restored to service? Is the defective part scrapped or returned for repair?

d. Maintenance history: Has the maintenance history of previous similar equipment been studied for answers to human factors problems and will 'what happened' and 'when' be recorded?

e. Spares support: Are spares to be supplied and carried with the 'unit in service'?

10.3.1.3 Maintenance Management

The following questions that affect the maintenance management should be considered at the design stage:

a. Requirements: How, what, when and by whom is maintenance to be carried out at required levels?

b. Instructions: Do they state in terms understood by the maintainer how to maintain the item?

c. Schedules: Are these realistic in what is to be done and when?

d. Programme: Does it state what time is allocated for doing maintenance?

e. Parts list: Does it identify what parts make up the item and the quantities?

f. Planning: Does it consider what is required so that it can be at the right place, in time and in the correct quantity?

g. Maintenance history: Is it recorded what has been done, when and how this will be of use in the maintenance review?

10.3.2 Environmental Conditions

The equipment should permit maintenance to be carried out on site under specified extreme environmental and operational conditions such as:

a. the need to wear protective clothing: This will require a more generous allowance of space. (See part P4 of this Standard);

b. high/low temperature and humidity: This will demand larger control knob size suitable for use with protective clothing or surface texturing to reduce the effect of perspiration. (See Part HFE6 of this Standard);

c. inadequate lighting: This may require the provision of a supplementary lighting supply so that the task can be adequately illuminated. (See Part HFE4 of this Standard);

d. the need to avoid hazards: Access for maintenance may expose personnel to hazards (see Part HHA of this Standard) or operating conditions such as high temperature or electrically live components;

10.3.3 Layout of Units

The maintainer is a user and as such should be considered at the design stage. The maintainer will require:

a. (space to work in and around the equipment. This may be a separate area from the normal user area (see Part HFE3 of this Standard);
b. adequate lighting to illuminate the task. This will require the provision of a light source in the equipment or a supplementary supply (see Part HFE4 of this Standard);

c. access to the subassemblies or components. Consider whether the following may have to pass through the space:
   i. the maintainer's hand, arm, head/torso, whole body;
   ii. tools, components or subassemblies (see Parts P3, P4 & HFE6 of this Standard);
   iii. a combination of the above.

10.3.3.1 Unit Access

This should be planned, tidy and functional with provision for:

a. pull-out/roll-out approach capability for maintenance;

b. suitably designated areas for working diagrams and the placement of test equipment and/or handbooks etc. (See Part HFE3 of this Standard);

c. identified and easy access for short life items that require frequent replacement.

10.3.3.2 Safety Measures

The design of the equipment should be such that adequate safety protection conforming to statutory Health and Safety regulations, comes into operation when it is opened for maintenance.

For example:

a. emergency shutdown/stop device (the use of which must be considered);
b. electrical cut-out/isolation switches;
c. lockable controls;
d. warning signs or guards, which should be incorporated if the equipment needs to be live or working when opened up.

10.3.4 Designing for Human Maintenance

Every item in the system will need to be maintained at some time in its life, some more frequently than others. To the maintainer this means that it should be accessible and/or removable from the equipment for some level of maintenance.

10.3.4.1 Unit Attachment

If necessary, runners should be attached to the equipment to allow it to be rolled-out for maintenance. In such instances the use of extended wiring, flexible piping and trunking would be beneficial. Adequate clearance for the runners is to be ensured. An example is shown inFigure 10.3:2.

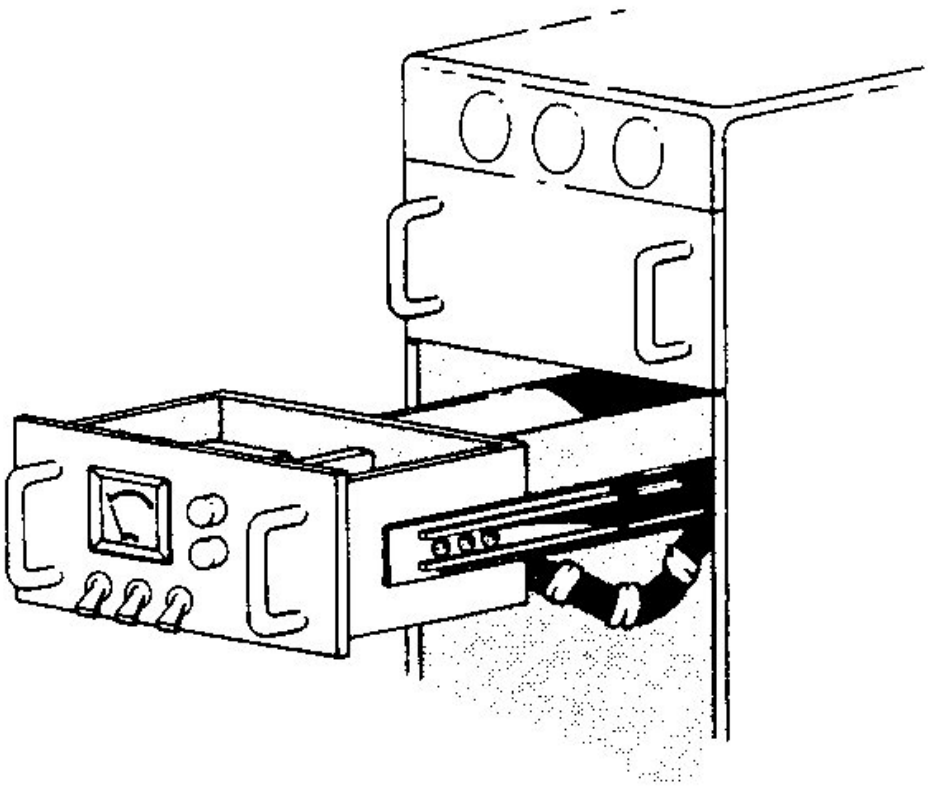

Figure 10.3:2: Unit Attachment

10.3.4.2 Unit Identification

All essential details should be easily and visually identified when in position. An example is shown in Figure (see also Part HFE8 of this Standard).

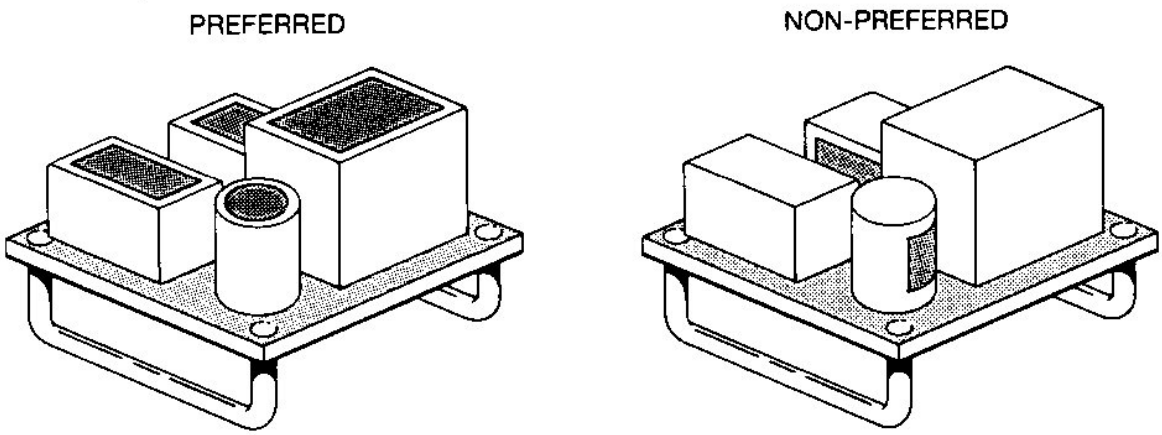

Figure 10.3.3: Unit Identification

10.3.4.3 Unit Handling/Portability

During the design stage consideration should be given to how a unit or component is to be lifted or moved during maintenance and whether its size makes it easily portable.

10.3.4.4 Use of Handles for Lifting

Units which need to be removed for any purpose should be provided with handles whenever their omission might lead to difficulty during removal or replacement or damage to the unit. The use of handles for the following weights are for guidance purposes only and are only applicable when unrestricted access is available.

a. loads less than 10 kg: the advantage of handles could be considered;
b. loads between 10-20 kg: handles are desirable;
c. loads in excess of 20 kg: handles are essential. (Loads in excess of 60 kg require mechanical lifting attachment).

10.3.4.5 Positioning of Handles

Handles should be positioned such that:

a. single handles are placed over the centre of gravity;

b. two or more handles are equidistant from the centre of gravity;
c. handles do not interfere with operation or maintenance;
d. at least 75 mm clearance exists between handle and obstructions. (See Table 10.3:1 for handle clearance for use with bare/clothed hand);
e. units can be drawn from racking by the handle, held comfortably and carried without interference when walking.

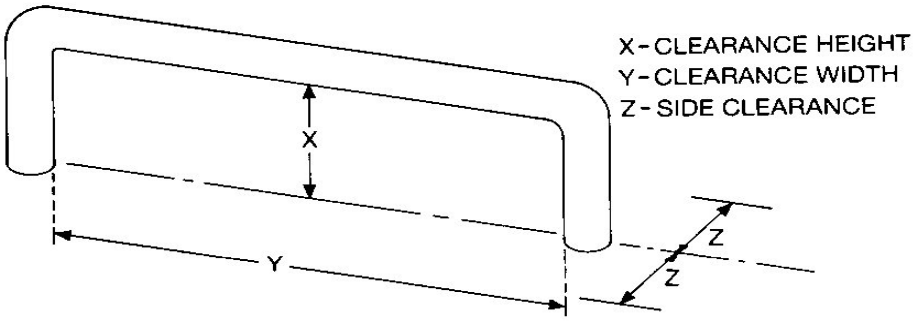

TYPE OF HANDLE BARS	Bare hand			Gloved Hand			Arctic Mitten		
	X		Z	X	Y	Z	X	Y	Z
Two fingers	32	64	38	38	76	38	Do not use		
One hand	50	108	50	64	120	50	100	140	100
Two hand	50	216	50	64	240	50	100	280	100
T-bars	38	100	38	50	115	50	Do not use		
J-bars	50	100	50	50	115	50	100	127	100
Recesses									
Finger tip	20	dia	13	25	dia	20	Do not use		
Two finger	32	64	50	38	76	50	Do not use		
One hand	50	108	50	64	120	75	100	140	100

Table 10.3:1: Handle Clearance Dimensions (mm)

10.3.4.6 Additional uses for handles.

Handles may be utilized for the following purposes, as well as for lifting/lowering:

a. prevention of accidental operation of controls;
b. protection for easily broken parts such as instrument faces;
c. to serve as locking devices to secure components in place;
d. to act as protective supports or stands.

10.3.4.7 Unit Lift

For manual handling purposes, the handling height/weight limits will determine whether it is a one or two person lift. One person lifts are preferred. (See Table 10.3:2) The designer should bear in mind the relative positions of the maintainer(s) and unit at the start/finish of the lift (see Parts HFE3 and HHA of this Standard). This will assist in determining the provision of the correct shaped handles or lifting/securing fixtures and their positioning.

Height (mm)						
Weight (Kg)	**0-305**	**306-610**	**611-915**	**916-1220**	**1221-1525**	**1526-1830**
0 – 6.8	1	1	1	1	1	1
6.9 – 9.1	1	1	1	1	1	2
9.2 – 11.4	1	1	1	1	2	2
11.5 – 13.6	1	1	1	1	1	1
13.7 – 15.9	1	1	1	2	2	**Use Mechanical List (label as such)**
16.0 – 18.2	1	1	2	2	2	
18.3 – 20.5	1	1	2	2	2	
20.6 – 40.8	2	2	2	2		

Table 10.3:2: Recommended Height/Weight Lift Limits

NOTE: 1 = One person lift 2 = Use two person to lift, label as such and provide handles.

Refer to The manual handling operations regulations (1992). HSE.

10.3.4.8 Cased Units

Where possible, cases should be removable, rather than equipment removable from cases; i.e. the case should lift off the unit, not the other way round, see Figure 10.3:.

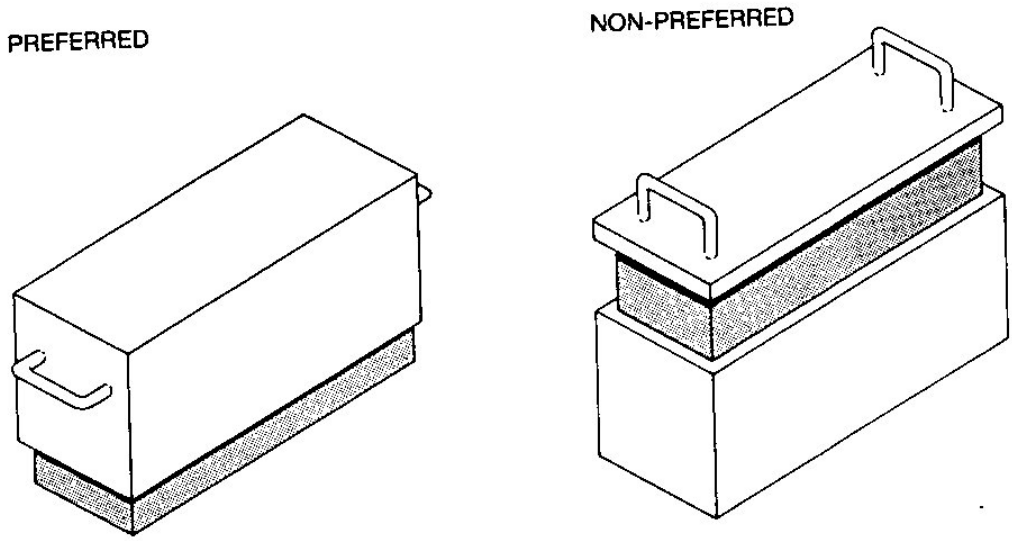

Figure 10.3:4: Case Design

10.3.4.9 Maintenance Tooling and Test Equipment

The designer should consider:

a. the tooling and test equipment required for maintenance, including visual control/monitoring;
b. the space required to fit and see or use tooling and test equipment;
c. the use of standard tooling, in preference to bespoke tooling.

10.3.4.10 The Use of Access Fasteners

Standardization in the use of fasteners should be considered for the whole equipment by using common types and standard sizes:

a. access fasteners should be kept to a minimum, within safety limits;
b. the use of hand-operated access fasteners is preferred where possible;
c. captive nuts and/or bolts must be used if dropping such items might cause damage or where assembling or dismantling would otherwise be difficult.

10.3.4.11 Access to the Components

The designer should consider whether:

a. the component has to be adjusted/removed. Does this require the use of tooling? If so what tools?

b. the space available is adequate for the tool to be fitted in place, held and used by the maintainer.

c. the access is adequate for the removal of the component in addition to the maintainer's hand(s) holding it.

10.3.4.12 Access Dimensions

The designer should be aware of the environmental conditions where operational maintenance is likely to be required. The dimensions shown in Table 10.3:3 are for guidance purposes only with bare handed access.

Access for Maintenance	Aperture Dimension
Inserting an empty flat hand	60 x 100 mm
Using a screwdriver with 25 mm dia handle	95 x 95 mm
Inserting a 50 mm dia connector with hand	100 x 100 mm
Inserting a box-shaped item with hand	width of item + 45 mm
Inserting a box-shaped item held by two hands at its sides	width of item + 115 mm
Inserting a square unit held by two handles	width of unit + 23 mm clearance on each side
Reaching into an access space to a depth of 150 -–600 mm	width of aperture x at least the depth of reach
Reaching at full arm's length (up to the shoulders)	Width of aperture 500 mm x 100 mm minimum height plus the facility of line of sight.

Table 10.3:3: Maintenance Access Dimensions (mm)

10.3.4.13 Access for lubrication/servicing

The designer should consider how the unit is to be lubricated, replenished or replaced when part of a complete system:

a. components should be self lubricating, where appropriate;
b. the number of types of lubrication used in the system should be kept to a minimum;
c. it should be possible to lubricate components without dismantling them;
d. lubrication and replenishment points should be easily accessible and labelled as such within the system as a whole.

10.3.4.14 Servicing when system is live/in operation:

a. how will the item be made safe to work on?

b. what will be required to isolate that item?
c. will the item require standby or back up arrangements to be made?
d. when the task is complete, what is required to return the system to normal working?

10.4 Maintainability and Maintenance Checklists

Some of the more important human factors subjects which could be specified at the design requirements stage are listed in Table 10.4:1.

1	Maintenance skill level requirements.
2	Need for special tools or test equipment.
3	Need for adjustments.
4	Parts standardization.
5	Clear subsystem function identification.
6	Visual inspection access.
7	Built-in test facilities.
8	Properly marked test points.
9	Colour coding and labels as appropriate.
10	Use of plug-in units.
11	Use of captive fasteners.
12	Use of handles on replaceable units.
13	Scope and range of technical manuals.
14	Human factors limitations in the design of the item.

Table 10.4:1: Maintainability Requirements Check List
(adapted from BS 6548)

10.5 Checklist of maintenance design factors

A maintenance review of the whole system design should consider the factors listed in Table 10.5:1.

		have been considered	have not been considered	are satisfactory	are not satisfactory	Remarks
Factors						
Accessibility (relative to maintenance items)						
1	Opening, panels and doors					
2	Covers, plates and caps					
3	Drawers, frames and slide					
4	Internal work space/volume					
5	Internal lighting and paint					
6	Location, Arrangement					
7	Other					
Maintenance Items						
8	Test and service points					
9	Cases, shields and guides					
10	Interlocks, overrides and stop					
11	Lines, cables and connectors					
12	Disconnects, latches, catches					
13	Fasteners, pins, safety wiring					
14	Mounting and packaging					
15	Controls and displays					
16	Coding, labelling, and pathways					
17	Parts, assemblies, modules					
18	Fuses, circuit breakers					
19	Other					
Maintenance Steps and Processes						
20	Detection					
21	Localization					
22	Isolation					
23	Correction and repair					
24	Testing and verification					
25	Removal and replacement					
26	Inspection, servicing, cleaning					
27	Adjustment, calibration					
28	Other					
Support Provisions						
29	Handling (powered) (manual)					
30	Mobility and transportability					
32	Test and service equipment					
33	Tools and accessories					
34	Spares, Parts and material					
35	Other					

Table 10.5:1: Maintenance Design Factors Checklist (adapted from Salvendy: 1997)

10.6 Definitions

For the purpose of this Part of the Defence Standard the following definitions apply.

Maintainability. The ability to carry out rapid and reliable system restoration, using ordinary trained people and reasonable support facilities to maintain the equipment at a specified level of performance.

Maintenance. All activities necessary to keep materiel in, or restore it to, a specified condition.

10.7 References

[480] ISO 6385 (Draft for comment, current) Ergonomic Principles in the Design of Work Systems

[481] The manual handling operations regulations (1992). HSE.

[482] BS 3811:1993 Glossary of Management Terms in Terotechnology

[483] PD 5304: 2000 Safety of Machinery

[484] BS 6548 (parts 1-6) Maintainability of Equipment. IEC 60706-2:1990. Maintainability of equipment. Guide to maintainability studies during the design phase

[485] BS EN 349:1993. Safety of machinery. Minimum gaps to avoid crushing of parts of the human body

[486] BS EN 547-1:1997. Safety of machinery. Human body measurements. Principles for determining the dimensions required for openings for whole body access into machinery

[487] BS EN 547-2:1997. Safety of machinery. Human body measurements. Principles for determining the dimensions required for access openings

[488] BS 7083:1996. Guide to the accommodation and operating environment for IT equipment

[489] ASTM F1166-95a: 2000. Standard practice for Human Engineering design for marine systems, equipment and facilities

[490] Def Stan 00-05. Design Criteria for Reliability, Maintainability and Maintenance of Land Service Materiel.

[491] Def Stan 00-10. General Design and Manufacturing Requirements for Service Electronic Equipment.

[492] Def Stan 00-40 (Part 1)/Issue 4: 1994 Reliability and Maintainability Management Responsibilities and Requirements for Programmed and Plans.

[493] Def Stan 00-41/Issue 3: 1993 Reliability and Maintainability MOD guide to practices and procedures

[494] US Military Documents - D1-H-7051: Human Engineering

[495] Salvendy, G. (1997). Handbook of Human Factors (Chapter 47). John Wiley & Sons Ltd, 2nd Edition.

[496] PP 7317. Ergonomics Standards & Guidelines for Designers, by Stephen Pheasant, published by BSI

[497] Pheasant, S.T. (2001) Bodyspace. Anthropometry, Ergonomics and the Design of Work. 2nd Edition. Taylor and Francis.

[498] Sanders, M.S. and McCormick, E.J. (1992) Human Factors in Engineering & Design published by McGraw-Hill. 7th Edition

[499] Salvendy, G. (1997) Ed. Handbook of Human Factors and Ergonomics 2nd Ed. Wiley-Interscience Publishers

[500] Woodson, W.E., Tillman, B., Tillman, P. (1992). Human Factors Design Handbook 2nd Ed. McGraw-Hill Publishers

[501] BS EN 349:1993. Safety of machinery. Minimum gaps to avoid crushing of parts of the human body

[502] BS EN 547-1:1997. Safety of machinery. Human body measurements. Principles for determining the dimensions required for openings for whole body access into machinery

[503] BS EN 547-2:1997. Safety of machinery. Human body measurements. Principles for determining the dimensions required for access openings

[504] BS 6548-2:1992, IEC 60706-2:1990. Maintainability of equipment. Guide to maintainability studies during the design phase

[505] BS 7083:1996. Guide to the accommodation and operating environment for IT equipment

[506] ASTM F1166-95a: 2000. Standard practice for Human Engineering design for marine systems, equipment and facilities

[507] STGP 11, STG 2002 ISSUE 3. HFI Technical Guide

[508] Def Stan 02-101 Part 1: 2000. Requirements for the design and fitting out of workshops, maintenance spaces and engineering stores for HM surface ships. Common requirements

[509] Def Stan 02-101 Part 2: 2000. Requirements for the design and fitting out of workshops, maintenance spaces and engineering stores for HM surface ships. Specific requirements

[510] Mil-Std-1472F: 1999. US DoD Design Criteria Standard – Human Engineering

[511] NASA-STD-3000:1995. Man-Systems Integration Standards Volumes 1 and 2

11 Accommodation and Habitability [HFE10]

This technical area is concerned with the design of spaces to live and work in, focusing attention within design on how people will be accommodated and how to ensure that a space is habitable.

There is considerable overlap with other technical areas, especially within the manpower, human factors engineering and health hazard assessment domains. Specifically, this Section overlaps with the following:

a. Complementing [M1];
b. Physical Characteristics [P3];
c. Workspace Design [HFE3].

11.1 Technical Guidance

Many considerations related to accommodation are common for the workplace and non-working areas, and in some instances these spaces are the same.

The main factors that affect habitability are as follows:

Platform/Building Space:

a. Space provision, location, adjacencies, size, shape, access, colour schemes;
b. Surface coverings-floor, walls, ceilings etc;
c. Furnishings;
d. Sleeping accommodation;
e. Personal space, dimensions, access, privacy;
f. Domestic areas, galleys, heads, showers, laundry etc., communal areas;
g. Passageways;
h. Messing;
i. Recreational/Leisure/Personal activities;
j. Social;
k. Educational study.

Social Facilities provided:

l. Messing;
m. Recreational (entertainment, leisure and study);
n. Educational study;
o. Personal activities;
p. Smoking.

Organisational

q. Manning policy;
r. Length of deployment/patrol;
s. Branches/Specialist teams/Messes;
t. Watches/Sleep/Fatigue.

Operational factors

u. Class of Platform/Vehicle e.g. Minor war vessel, Surface Ship, Submarine;
v. Action state, Peace/War;
w. Time-time into watch, patrol or deployment/

Mental

x. Stress, Performance.

Personnel factors

y. Gender-male/female;
z. Rank or rate-Junior rates/Senior rates/Warrant Officers/Officers;
aa. Operational branch;
bb. Nationality/Cultural group/Religion;
cc. Attitudes-Current in service/Recent recruits/Recent leavers;
dd. Future recruits-Socio-economic group, expectations, aspirations.

Physical

ee. Motion;
ff. Vibration;
gg. Noise;

hh. Atmosphere,Temperature, humidity, ventilation, pollutants;
ii. Lighting, visibility, readability, glare, adaptation, skin tone;
jj. Clothing.

11.2 References

[512] BS EN ISO 11064-1:2001 Ergonomics Design of Control Centres. Principles for the Design of Control Centres.

[513] BS EN ISO 11064-2:2001 Ergonomics Design of Control Centres. Principles for the Arrangement of Control Suites

[514] BS EN ISO 11064-3:2001 Ergonomics Design of Control Centres. Control Room Layout.

[515] BS ISO 6954:2000. Mechanical vibration. Guidelines for the measurement, reporting and evaluation of vibration with regard to habitability on passenger and merchant ships

[516] ISO 3827-5:1979. Shipbuilding – Coordination of dimensions in ships' accommodation – Part 5 Coordinating sizes for key components

[517] ISO 11226:2000. Ergonomics – Evaluation of static working postures

[518] BS 7083:1996. Guide to the accommodation and operating environment for IT equipment

[519] ANEP 24 (NATO MAS), Edition 1. Guidelines for shipboard habitability requirements for combat and surface ships

[520] ANEP 26 (NATO MAS), Edition 1. Ergonomic data for shipboard space design in NATO surface ships

[521] Def Stan 02-107: 2000. Requirements for accommodation – HM surface ships

[522] Def Stan 00-25 Part 14: 2000. Military Land Vehicle Design

[523] STGP 11. STG 2002 ISSUE 3. HFI Technical Guide

[524] Mil-Std-1472F: 1999. US DoD Design Criteria Standard – Human Engineering

[525] NAS-STD-3000: 1995. Man-Systems Integration Standards Volumes 1 and 2

© Crown Copyright 2004

Copying Only as Agreed with DStan

Defence Standards are Published by and Obtainable from:

Defence Procurement Agency
An Executive Agency of The Ministry of Defence
Directorate of Standardization
Kentigern House
65 Brown Street
GLASGOW G2 8EX

DStan Helpdesk

Tel 0141 224 2531/2
Fax 0141 224 2503
Internet e-mail enquiries@dstan.mod.uk

File Reference

The DStan file reference relating to work on this standard is D/DStan/21/25/19

Contract Requirements

When Defence Standards are incorporated into contracts users are responsible for their correct application and for complying with contractual and statutory requirements. Compliance with a Defence Standard does not in itself confer immunity from legal obligations.

Revision of Defence Standards

Defence Standards are revised as necessary by up issue or amendment. It is important that users of Defence Standards should ascertain that they are in possession of the latest issue or amendment. Information on all Defence Standards is contained in Def Stan 00-00 Standards for Defence Part 3 , Index of Standards for Defence Procurement Section 4 'Index of Defence Standards and Defence Specifications' published annually and supplemented regularly by Standards in Defence News (SID News). Any person who, when making use of a Defence Standard encounters an inaccuracy or ambiguity is requested to notify the Directorate of Standardization (DStan) without delay in order that the matter may be investigated and appropriate action taken.