9003329 0027158 68T

FAA-STD-019b
August 28, 1990
SUPERSEDING
FAA-STD-019a, 09/26/85

FEB 5 1991

DEPARTMENT OF TRANSPORTATION
FEDERAL AVIATION ADMINISTRATION
STANDARD

LIGHTNING PROTECTION, GROUNDING, BONDING AND

SHIELDING REQUIREMENTS FOR FACILITIES

Information Handling Services, 1999
August 11, 1999 06:32:53

9003329 0027159 516

FOREWORD

This document defines standard configuration and procedures for the application of lightning protection, surge and transient protection, grounding, bonding and shielding practices to the design and construction of facilities housing electronic equipment, and the installation of electronic equipment. This standard applies to new construction and modifications to existing facilities required for the installation of electronic equipment. Pertinent application of, or deviation from, this standard shall be recorded in contract documents and on the facility drawings and documentation.

Wide use of solid state components at FAA electronic facilities has resulted in a combining of several technologies contained in this standard. Solid state electronic equipment is highly susceptible to lightning induced transients, power line surges and voltage anomalies that occur most frequently because of improper grounding, bonding and shielding practices. The majority of the basic requirements and practices contained in this document have been developed from previous application to many different facility and electronic equipment types. Optimization of protection can be achieved during the design of new electronic equipment and facilities to house that equipment.

This standard contains 6 sections. Section 1 gives the scope and purpose of the standard. Section 2 lists reference documents. Section 3 gives requirements for surge and transient protection, lightning protection, the earth electrode system, the electronic multipoint ground system, the electronic single point ground system, National Electrical Code (NEC) compliance, bonding and shielding. Section 4 provides quality assurance requirements. Section 5, "Preparation for Delivery", does not apply to this document. Section 6 contains notes and definitions.

Information Handling Services, 1999
August 11, 1999 06:32:53

9003329 0027160 238

CONTENTS

Paragraph	Title	Page
1.	SCOPE	1
1.1	Scope	1
1.2	Purpose	1
2.	APPLICABLE DOCUMENTS	1
2.1	Government documents	1
2.2	Non-Government documents	2
3.	REQUIREMENTS	3
3.1	Surge and transient protection requirements	3
3.1.1	General	3
3.2	External lines and cables	4
3.2.1	Fiber optic lines	4
3.2.2	Balanced pair lines	4
3.2.3	Ferrous conduit	4
3.2.4	Buried guard wires	4
3.2.5	Armored cable	4
3.2.6	Facility entrance of buried cables	5
3.3	Interior lines and cables	5
3.4	Location of surge and transient protection	5
3.5	Electronic equipment transient susceptibility levels	5
3.6	Location of transient suppression equipment	5
3.7	Conducted power line surges	5
3.7.1	Surge levels	5
3.7.2	Facility AC surge arrester	6
3.7.2.1	Characteristics	6
3.7.2.2	Packaging	8
3.7.2.3	In-line inductors	8
3.7.2.4	Installation	8
3.7.3	Electronic equipment power lines	8
3.8	Conducted landline transients	9
3.8.1	Transient levels	9
3.8.2	Protection design	9
3.8.3	Functional requirements	10
3.8.4	Installation at facility entrance	11
3.8.5	Installation at electronic equipment.	11
3.8.6	Externally mounted electronic equipment	11
3.8.7	Axial landlines	11
3.8.7.1	Protection design	12
3.8.7.2	Metal bulkhead connector plates	12
3.8.7.3	Installation at facility entrances	12
3.9	Lightning protection system requirements	13
3.9.1	General	13
3.9.2	Materials	13

Information Handling Services, 1999
August 11, 1999 06:32:53

3.9.3 Main conductors 13
3.9.4 Hardware 13
3.9.4.1 Fasteners 13
3.9.4.2 Fittings 13
3.9.5 Guards 13
3.9.6 Bonds 14
3.9.6.1 Metallic bodies subject to direct lightning discharge 14
3.9.6.2 Metallic bodies subject to induced charges 14
3.9.7 Conductor and conduit routing 14
3.9.8 Down conductor terminations 14
3.9.9 Disconnects 15
3.9.10 Buildings 15
3.9.10.1 Air terminals 15
3.9.10.2 Number of down conductors 15
3.9.10.3 Metal parts of buildings 15
3.9.10.4 Roof mounted antennas 15
3.9.11 Antenna towers 15
3.9.11.1 Number of down conductors. 15
3.9.11.2 Towers without radomes 16
3.9.11.3 Towers with radomes 25 ft. in diameter or less 16
3.9.11.4 Towers with radomes greater than 25 ft. in diameter 16
3.9.11.5 Antenna protection. 17
3.9.12 Fences 17
3.9.12.1 Fences and gates 17
3.9.12.2 Overhead power line considerations 18
3.10 Earth electrode system requirements 18
3.10.1 General 18
3.10.2 Site survey 18
3.10.3 Design 18
3.10.4 Configuration 18
3.10.5 Ground rods 19
3.10.5.1 Material and size 19
3.10.5.2 Spacing 19
3.10.5.3 Depth of rods 19
3.10.5.4 Location 19
3.10.6 Interconnections 19
3.10.7 Access well 20
3.11 Electronic multipoint ground system requirements 20
3.11.1 General 20
3.11.1.1 Raised floors 20
3.11.2 Ground plates, cables and protection 20
3.11.2.1 Ground plates and buses 20
3.11.2.2 Ground cables 22
3.11.2.3 Protection 22
3.11.3 Building structural steel 22
3.11.3.1 Metal building elements 23
3.11.4 Interior metallic piping systems 23
3.11.4.1 Ground connections 23
3.11.5 Electrical supporting structures 23
3.11.5.1 Conduit 23
3.11.5.2 Cable trays and wireways 24

Information Handling Services, 1999
August 11, 1999 06:32:53

3.11.6 Secure facilities 24
3.12 Electronic single point ground system requirements 24
3.12.1 General 24
3.12.2 Ground plates 24
3.12.3 Isolation 24
3.12.4 Resistance 24
3.12.5 Ground cable size 24
3.12.5.1 Main ground cable 24
3.12.5.2 Trunk ground cables 26
3.12.5.3 Branch ground cables 26
3.12.5.4 Electronic equipment ground cables 26
3.12.5.5 Interconnections 26
3.12.6 Labeling 26
3.12.6.1 Cables 26
3.12.6.2 Ground plates 27
3.13 National Electrical Code (NEC) grounding compliance 27
3.13.1 General 27
3.13.2 Grounding electrode conductors 27
3.13.3 Equipment grounding conductors 28
3.13.4 Color coding of conductors 28
3.13.4.1 Ungrounded conductors 28
3.13.4.2 Grounded conductors 29
3.13.4.3 Color coding of equipment grounding conductors 29
3.13.5 Conductor routing 29
3.13.6 Non-current-carrying metal equipment enclosures 30
3.14 Bonding requirements 30
3.14.1 Resistance 30
3.14.2 Methods 30
3.14.3 Exothermic welds 31
3.14.4 Welds 31
3.14.5 Brazing 31
3.14.6 Mechanical connections 32
3.14.6.1 Bolted connections 32
3.14.6.2 Hydraulically crimped 33
3.14.6.3 Explosively crimped 33
3.14.7 Bonding straps and jumpers 33
3.14.8 Fasteners 34
3.14.9 Metal elements requiring bonding 35
3.14.9.1 Earth electrode risers 35
3.14.9.2 Counterpoise cables 35
3.14.9.3 Underground metallic pipes and tanks 36
3.14.9.4 Steel frame buildings 36
3.14.9.5 Interior metallic pipes 36
3.14.9.6 Electrical supporting structures 36
3.14.9.7 Flat bars 36
3.14.10 Temporary bonds 36
3.14.11 Inaccessible locations 36
3.14.12 Coupling of dissimilar metals 36
3.14.13 Surface preparation 36
3.14.13.1 Paint removal 36
3.14.13.2 Inorganic film removal 36

Information Handling Services, 1999
August 11, 1999 06:32:53

3.14.13.3 Area to be cleaned 36
3.14.13.4 Final cleaning 37
3.14.13.4.1 Clad metals 37
3.14.13.4.2 Aluminum alloys 37
3.14.13.5 Completion of the bond 37
3.14.13.6 Refinishing of bond 37
3.14.14 Bond protection 37
3.14.14.1 Paint 37
3.14.14.2 Inaccessible locations 37
3.14.14.3 Accessible locations 37
3.14.14.4 Compression bonds in protected areas. 37
3.15 Shielding requirements 38
3.15.1 Design 38
3.15.2 Facility shielding 38
3.15.3 Conductor and cable shielding 38
3.15.3.1 Signal lines and cables 38
3.15.3.2 Termination of individual shields 38
3.15.3.3 Termination of overall shields 38
3.15.4 Space separation 39
3.16 Control of static electricity 39
3.16.1 General 39
3.16.2 Controlled areas 39
3.16.3 Humidity control 40
3.16.4 Work surfaces 40
3.16.5 Tools and accessories 40
3.16.6 Furniture and upholstery 40
3.16.7 Floors 40
3.16.8 Ion generation 40

4. QUALITY ASSURANCE PROVISIONS 40
4.1 Test Plan 40
4.2 Approval 41

5. PREPARATION FOR DELIVERY 41

6. NOTES 42
6.1 Definitions 42
6.1.1 Access well 42
6.1.2 Air terminal 42
6.1.3 Arrester 42
6.1.4 Bond 42
6.1.5 Bond, direct 42
6.1.6 Bond, indirect 42
6.1.7 Bonding 42
6.1.8 Bonding jumper 43
6.1.9 Branch circuit 43
6.1.10 Brazing 43
6.1.11 Building 43
6.1.12 Cabinet 43
6.1.13 Case 43

Information Handling Services, 1999
August 11, 1999 06:32:53

6.1.14 Chassis 43
6.1.15 Clamp voltage 43
6.1.16 Conductor 43
6.1.16.1 Conductor, bare 43
6.1.16.2 Conductor, insulated 43
6.1.16.3 Conductor, lightning bonding (secondary) 43
6.1.16.4 Conductor, lightning down 43
6.1.16.5 Conductor, lightning main 43
6.1.16.6 Conductor, lightning roof 44
6.1.17 Crowbar 44
6.1.18 Earth electrode system (grounding electrode system) 44
6.1.19 Electromagnetic interference 44
6.1.20 Electronic multipoint ground system 44
6.1.21 Electronic single point ground system 44
6.1.22 Equipment grounding conductor 44
6.1.23 Equipment, unit or piece of 44
6.1.24 Feeder 44
6.1.25 Facility ground system 44
6.1.26 Fitting, high compression 45
6.1.27 Ground 45
6.1.28 Grounded 45
6.1.29 Grounded conductor 45
6.1.30 Grounded, effectively 45
6.1.31 Grounding conductor 45
6.1.32 Grounding electrode 45
6.1.33 Grounding electrode conductor 45
6.1.34 High frequency 45
6.1.35 Landline 45
6.1.36 Line replaceable unit 45
6.1.37 Low frequency 45
6.1.38 Overshoot voltage 45
6.1.39 Pressure connector 46
6.1.40 Rack 46
6.1.41 Reference plane or point, electronic signal 46
6.1.42 Reverse standoff voltage 46
6.1.43 Shield 46
6.1.44 Structure 46
6.1.45 Transient suppressor 46
6.1.46 Turnon voltage 46
6.2 Acronyms and abbreviations 46

LIST OF FIGURES

Figure	Title	Page
1	Typical Configuration for Protection of Electronic Equipment from Conducted Landline Transients	3
2	Lightning Protection for Radomes and Radar Antenna Platforms	17
3	Facility Ground System Configuration	21
4	Electronic Single Point Ground System Installation	25
5	Order of Assembly for Bolted Connections	34
6	Grounding of Overall Cable Shields to Connectors and Penetrated Walls	41
7	Grounding Overall Shield to Terminal Strip	42

LIST OF TABLES

Table	Title	
I.	Line-to-Ground Surge Levels for 120/208V and 277/480V AC Service Lines	6
II.	Line-to-Line Surge Levels for 480V AC Service Lines	6
III.	Conducted Landline Transient Levels	9
IV.	Size of Electronic Multipoint Ground Cables	22
V.	Minimum Number of Twists for Power Conductors	30
VI.	Acceptable Couplings Between Dissimilar Metals	32
VII.	Minimum Torque Requirements for Bolted Bonds	33
VIII.	Metal Connections for Aluminum and Copper Jumpers	35

Information Handling Services, 1999
August 11, 1999 06:32:53

9003329 0027166 756

1. SCOPE

1.1 Scope. This document defines standard configurations and procedures for new facilities and facility modifications in the application of lightning protection systems, surge and transient protection, grounding, bonding, and shielding. It provides requirements for the design, construction, modification or evaluation of facilities. It also provides reference information without imposing minimum or mandatory requirements for existing facilities.

1.2 Purpose. The requirements of this standard are intended to minimize electrical hazards to personnel and damage to facilities and electronic equipment from lightning and power faults, and to minimize electromagnetic interference levels.

2. APPLICABLE DOCUMENTS

2.1 Government documents. The current issue of the following documents form a part of this standard and are applicable to the extent specified herein. If conflicts occur between these documents and the contents of this standard, the contents of this standard provide the superseding requirements.

Federal Specifications

P-D-680	Dry Cleaning Solvent

(Information required to obtain copies of federal specifications is available from General Services Administration offices in Atlanta, Auburn WA; Boston, Chicago, Denver, Fort Worth, Kansas City MO, Los Angeles, New Orleans, New York, San Francisco, and Washington DC)

FAA Specifications

FAA-C-1217	Electrical Work, Interior

FAA Standards

FAA-STD-012	Paint Systems for Equipment
FAA-STD-020	Transient Protection, Grounding, Bonding and Shielding Requirements for Electronic Equipment

FAA Orders

Order 6950.19	Practices and Procedures for Lightning Protection, Grounding, Bonding and Shielding Implementation
Order 6950.20	Fundamental Considerations of Lightning, Protection, Grounding, Bonding and Shielding

Information Handling Services, 1999
August 11, 1999 06:32:53

9003329 0027167 692

(Copies of these specifications, standards, orders and other applicable FAA documents may be obtained from the Contracting Officer issuing the invitation-for-bids or request-for-proposals. Requests should fully identify material desired, i.e. specification, standard, amendment, drawing numbers and dates. Requests should cite the invitation-for-bids, request-for-proposals, the contract involved, or other use to be made of the requested material.)

Military Documents

MIL-HDBK-237	Electromagnetic Compatibility/Interference Program Requirements
NACSIM 5203	Guidelines for Facility Design and Red/Black Installation (U) (Confidential Document)

(Single copies of Military specifications, standards, and handbooks may be requested by mail or telephone from the Naval Forms and Publications Center, 5801 Tabor Ave, Philadelphia PA 19120. Not more than five items may be ordered on a single request; the Invitation for Bid or Contract Number should be cited where applicable. Only latest revisions (complete with latest amendments) are available; slash sheets must be individually requested. Request all items by document number. For subscription service information, direct inquiries to the above address with additional marking (ATTN: CODE 56).

2.2 Non-Government documents. Refer to para. 2.1, Government Documents.

National Fire Protection Association (NFPA)

NFPA 70	National Electrical Code (NEC)
NFPA 77	Static Electricity
NFPA 78	Lightning Protection Code

(Requests for copies of the National Electrical Code and the Lightning Protection Code should be addressed to the National Fire Protection Association, Batterymarch Park, Quincy MA 02269.)

Underwriters Laboratories, Inc.

UL 96	Lightning Protection Components
UL 96A	Installation Requirements for Lightning Protection Systems
UL 779	Electrically Conductive Floorings (ANSI-A148.1)

(Requests for copies of UL documents should be addressed to Underwriters Laboratories, 207 East Ohio St., Chicago IL 60611, ATTN: Publications.)

Information Handling Services, 1999
August 11, 1999 06:32:53

3. REQUIREMENTS

3.1 Surge and transient protection requirements

3.1.1 General. Lines, cables, and facility electronic equipment shall be protected against surges on AC power lines and transients on electronic land-lines from the effects of lightning. Ferrous conduit or guard wires shall be used to shield external lines and cables to minimize inductive coupling of transients from lightning discharges. Fiber optic lines and balanced metallic lines shall also be used when feasible. Transient suppression, similar to Figure 1, "Typical Configurations of Protection for Electronic Equipment from Conducted Landline Transients", shall be provided at the entrance of lines and cables to facility structures and electronic equipment enclosures as necessary to protect electronic equipment from conducted transients. A surge arrestor

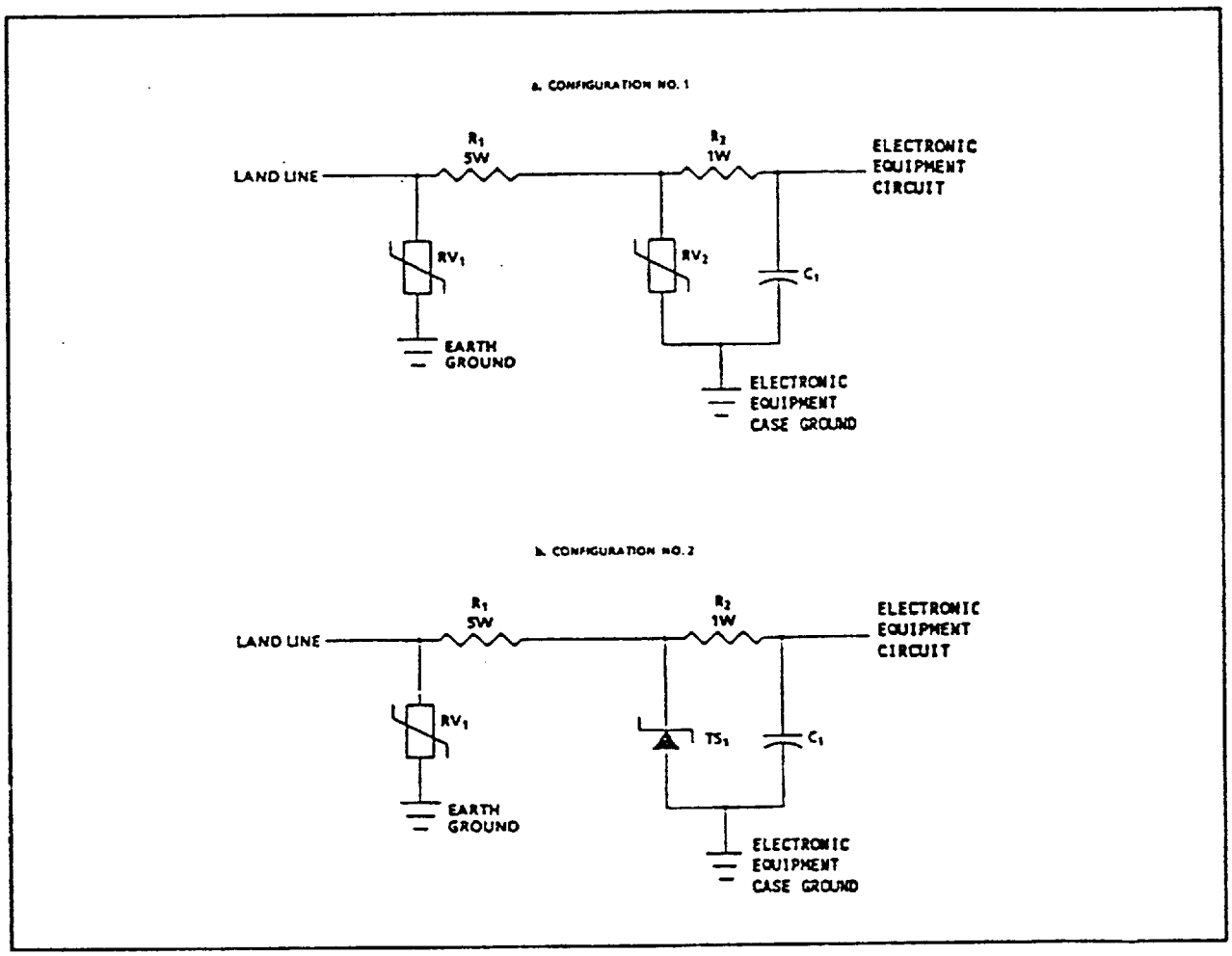

Figure 1. Typical Configurations of Protection for Electronic Equipment from Conducted Landline Transients.

shall be installed at the AC service entrance to the facility. Implementation guidelines are contained in FAA Orders 6950.19 and 6950.20 and FAA-STD-020.

3.2 External lines and cables

3.2.1 Fiber optic lines. Fiber optic lines are not inherently susceptible to environmental interference or the induction fields produced by lightning. They are recommended to replace metallic lines when economically and technically feasible. Ferrous conduit shielding and suppression components are not required for fiber optic lines unless these lines use metallic or electrically conductive sheaths or strength members. Physical protection shall be provided for these lines.

3.2.2 Balanced pair lines. When possible, signals routed externally between facility shelters and buildings and to externally mounted electronic equipment shall be designed as balanced two conductor, shielded circuits. This does not apply to RF signals on coaxial lines.

3.2.3 Ferrous conduit. In this standard, ferrous conduit is defined as rigid galvanized steel conduit. Buried alternating current (AC) power lines and all buried electronic lines, conductors and cables to the facility shall be enclosed in watertight, ferrous conduit. However, where the length of the run exceeds 300 ft., the above lines, conductors and cables, except for the AC service conductors, into the facility may be armored cable as defined below. Conduit joints and fittings shall be electrically continuous with bonding resistance less than five milliohms between joined parts. Conduit enclosing AC power service entrance conductors shall be terminated using conductive fittings to the distribution transformer case and to the service entrance cabinet. Conduit enclosing signal, control, status, power, or other conductors to electronic equipment shall be terminated using conductive fittings to their respective junction boxes, equipment cabinets, enclosures, or other grounded metal structures. At each location where conduits first penetrates a shelter or building's exterior wall, direct connections shall be made to the electronic multipoint ground plate or to the earth electrode system as defined here after.

3.2.4 Buried guard wires. Buried lines, not completely enclosed in ferrous metal conduit, shall be protected by a bare No. 6 AWG, solid copper guard wire. The guard wire shall be embedded in the soil, a minimum of 10 in. directly above and parallel to the lines or cables being protected. The guard wire shall be bonded to the earth electrode system at each end and to ground rods at intervals not exceeding 300 feet using exothermic welds or FAA approved pressure connectors.

3.2.5 Armored cable. Armored cable shall be bonded to the earth electrode system at the point of entry into the facility with a No. 2 AWG bare copper conductor. Where this is not feasible, armor shall be bonded to the main ground plate. If none of the above are available, armor shall be grounded by bonding to the ground bus at the service disconnecting means. If armor is continued to the electronic equipment, it shall be bonded to the multipoint

Information Handling Services, 1999
August 11, 1999 06:32:53

ground system of the electronic equipment unless the equipment is required to be isolated.

3.2.6 Facility entrance of buried cables. Buried cables shall enter a facility in ferrous conduit. The conduit shall extend a minimum of 5 ft. past the earth electrode system to prevent the introduction of surges and transients into the facility. The buried end of each of these conduits shall be bonded to the earth electrode system with a stranded bare copper conductor, No. 2 AWG, minimum. The other end of each of these conduits shall be bonded to their respective entrance housings.

3.3 Interior lines and cables. All cables and wiring exceeding 6 ft. in length shall be enclosed end-to-end in ferrous conduit, ductwork, cable trays or wireways that are connected to the electronic multipoint ground system as specified in para. 3.11.5.1 and 3.11.5.2.

3.4 Location of surge and transient protection. The location of surge and transient protection for AC power lines and landlines is specified hereinafter and in FAA-STD-020.

3.5 Electronic equipment transient susceptibility levels. Electronic equipment supplied as part of the facility shall be provided with transient protection. The equipment susceptibility level is defined as the transient level on the line which may cause damage, degradation, or upset to electronic circuitry connected to the line. Protection for these levels is in addition to the levels specified in para. 3.7 and shall meet requirements of FAA-STD-020.

3.6 Location of transient suppression equipment. When space is not available within equipment enclosures for the specified power line and landline transient suppression at entrances to equipment enclosures, transient suppression may be externally mounted to equipment enclosures using proper grounding, bonding and shielding procedures. See paragraphs 3.8.4 and 3.8.5 of this standard and FAA-STD-020 for guidance in terminating the ground conductor of suppression devices.

3.7 Conducted power line surges. To reduce transients conducted to electronic equipment, a surge arrester shall be provided at the service disconnecting means. Additional transient suppression components, devices or circuits shall be provided at power line entrances to electronic equipment as described in FAA-STD-020. Arrester protection devices at the service disconnecting means and transient suppression provided at electronic equipment power line entrances shall be functionally compatible.

3.7.1 Surge levels. Surge levels and number of occurrences for selection or design of facility AC arresters are given by Table I, Line-to-Ground Surge Levels for 120/208V and 277/480V AC Service Lines, and Table II, Line-to-Line Surge Levels for 480V AC Service Lines. Table I defines line-to-ground surge currents, and number of occurrences for 120/208V and 277/480V AC services. Table II defines line-to-line surge parameters for 480V AC services. In these tables the 8-by-20 μs wave form defines a transient with a rise time of 8 μs

Information Handling Services, 1999
August 11, 1999 06:32:53

from inception to peak value that exponentially decays to 50 percent of peak value 20 μs after inception.

TABLE I, LINE-TO-GROUND SURGE LEVELS FOR 120/208V AND 277/480V AC SERVICE LINES

Surge Current Amplitude 8-by-20 Microsecond Waveform	Number of Surges (Lifetime)	
	Normal Phase Current 100 A or Less	Greater than 100 A
10 KA	1,000	1,500
20 KA	500	700
30 KA	250	375
40 KA	25	50
50 KA	1	5
60 KA	-	2
70 KA	-	1

TABLE II, LINE-TO-LINE SURGE LEVELS FOR 480V AC SERVICE LINES

Surge Current Amplitude 8-by-20 Microsecond Waveform	Number of Surges (Lifetime)
1 KA	1,000
10 KA	100
20 KA	50
30 KA	10

3.7.2 Facility AC surge arrester. A facility AC surge arrester shall be installed on the line side of the facility service disconnecting means. This surge arrester may be a combination of solid state circuits, varistors, or other devices and circuits designed to meet appropriate FAA specifications. These arresters shall be approved by the Contracting Officer. For services with a grounded neutral at the service disconnecting means, arrester elements connected line-to-neutral shall be provided. For services without a grounded neutral at the service disconnecting means, provide arrester elements connected line-to-ground and line-to-line. Lightning arresters shall also be installed on the primary side of FAA owned distribution transformers.

Information Handling Services, 1999
August 11, 1999 06:32:53

3.7.2.1 Characteristics. Minimum functional and operational characteristics of facility arresters for installation at service disconnecting means shall be as follows:

(a) Reverse standoff (maximum operating) voltage. Reverse standoff voltage is the maximum voltage that can be applied across arrester terminals with the arrester remaining in an off (non-conducting) state. Reverse standoff voltage of the arrester shall be 125 ± 5 percent of normal line voltage.

(b) Leakage current. Leakage current shall not exceed 1 ma at reverse standoff voltage.

(c) Turnon voltage. Turnon voltage is the minimum voltage across arrester terminals that will cause the arrester to turn on and conduct. Turnon voltage shall not exceed 150 percent of reverse standoff voltage.

(d) Clamp (discharge) voltage. Maximum clamp voltage, when discharging the surges listed in Tables I or II, as applicable, shall not exceed electronic equipment damage voltage or operational upset voltage. Clamp voltage is the maximum voltage that appears across an arrester output terminal while conducting surge currents.

(e) Overshoot voltage. Overshoot voltage shall not exceed 2 times the arrester clamp voltage for more than 10 nanoseconds. Overshoot voltage is the surge voltage level that appears across the arrester terminals before the arrester turns on and clamps the surge to the specified voltage level.

(f) Self-restoring capability. The surge arrester shall automatically return to an off state after surge dissipation when line voltage returns to normal.

(g) Operating lifetime. The arrester shall safely dissipate the number and amplitude of surges listed in Tables I and II as applicable. Clamp (discharge) voltage shall not change more than 10 percent over the operating life of the arrester.

(h) Fusing. The input to each arrester device shall be internally fused to protect the AC power supply equipment against overload should an arrester device short. This fusing shall not increase the clamp voltage of the arrester and shall pass the surge current levels given by Tables I and II without opening. Fusing provided shall open on application of a steady state current at a level low enough to prevent damage or degradation to the AC power supply. Two indicator lamps per phase on the arrester enclosure cover shall visually indicate that a fuse has opened.

(i) In-line inductors. Use caution when selecting and installing in-line inductors as they will increase the power source impedance. If the powered equipment has a significant current harmonic content requirement, unacceptable distortion of the voltage to that equipment may result from the installation of in-line inductors. Only inductors designed to have low DC resistance shall be used as in-line devices for AC arresters. In-line inductors shall safely pass electronic equipment operating voltages and line currents with 130

Information Handling Services, 1999
August 11, 1999 06:32:53

percent overvoltage conditions for a period of 50 milliseconds minimum. In conjunction with the arrester, inductors shall safely conduct the surge currents listed in Tables I and II. Service life of in-line inductors shall be a minimum of 10 years.

3.7.2.2 Packaging. All components comprising an arrester shall be packaged in a single National Electrical Manufacturers Association (NEMA) type 4 waterproof enclosure. Heavy duty, screw-type studs shall be provided for all input and output connections. The arrester elements shall be electrically isolated from the enclosure to a minimum of 10 megohms resistance. The enclosure door shall be hinged and electrically bonded to the enclosure when shut. Hinges shall not be used to provide electrical bonding. Indicating lights shall be mounted on the front door. Fuses, lights, fuse wires and arrester elements or components shall be readily accessible for inspection and replacement.

3.7.2.3 In-line inductors. In-line inductor provided with or as part of secondary arresters may be installed within the arrester enclosure or in a separate enclosure on the electronic equipment side of the arrester elements.

3.7.2.4 Installation. The arrester shall be installed as close as practical (within 12 in.) to the facility service disconnecting means. Wiring connections shall be on the line side of the service disconnecting means and may be larger than the gage specified herein if recommended by the arrester manufacturer. Connections shall be pressure type, UL approved for the application.

(a) Phase connections. Phase lugs of the surge arrester shall be connected to corresponding phase terminals of the service disconnecting means with insulated No. 4 AWG (minimum) stranded copper cable. Connections shall be as short and direct as possible without loops, sharp bends or kinks.

(b) Ground connections. The ground connection for the surge arrester elements shall be routed as directly as possible, with no loops, sharp bends or kinks, to the earth electrode system. However, when the grounding electrode conductor in the service disconnecting means is properly connected to the neutral conductor bus and is routed as described above, the ground for the arrester elements may be connected to the neutral bus in the service disconnecting means. This connection shall also be as short as possible with no loops, sharp bends or kinks. The ground conductor for the arrester elements shall be No. 4 AWG (minimum) stranded copper cable color coded white when connected from the arrester to the service disconnecting means.

(c) Equipment grounding conductor. The surge arrester enclosure shall be connected to the ground bus in the service disconnecting means enclosure with No. 6 AWG copper wire. The wire shall have green insulation.

3.7.3 Electronic equipment power lines. Transient suppression devices, components or circuits for protection of electronic equipment power lines shall be provided as an integral part of all electronic equipment. These devices shall be positioned at the AC power conductor entrance to electronic equipment provided as part of the facility. Transient suppression shall be provided for both neutral and phase conductors. A detail design effort shall

Information Handling Services, 1999
August 11, 1999 06:32:53

be completed in conjunction with the selection of the arrester at the service disconnecting means and the electronic equipment requirements described in FAA-STD-020. The design and selection of these transient suppressors shall be approved by the Contracting Officer.

3.8 Conducted landline transients. Transient protection shall be provided for all landlines both at facility entrances and at entrances to electronic equipment. Landlines include all signal, control, status and interfacility electronic equipment power lines installed above and below grade between facility structures and to externally mounted electronic equipment. All unused conductors of a cable shall be grounded at each end. This shall be accomplished by connection to the grounded shield at the terminal strip. Additional design and packaging requirements applicable to audio, radio frequency (RF) and other signals transmitted by axial cables are specified in para. 3.8.7. Transient protection shall be provided for all landlines including landlines provided or installed by the telephone company.

3.8.1 Transient levels. Electronic equipment using landlines shall be protected against the transient levels defined in Table III, Conducted Landline Transient Levels. Transient levels for landlines installed in ferrous conduit are different from those for landlines not in ferrous conduit. Landlines in ferrous conduit require transient protection only at electronic equipment entrances. Landlines not in ferrous conduit require protection both at electronic equipment and facility entrances. The 8-by-1000 μs waveform in Table III defines a transient with an 8 μs rise time and a decay to 50 percent of the peak voltage in 1000 μs.

TABLE III, CONDUCTED LANDLINE TRANSIENT LEVELS

No. of Transients (8-by-1000) Microsecond Waveform	Peak Amplitude (Voltage and Current)	
	Lines In Ferrous Conduit	Lines Not In Ferrous Conduit
1,000	50V, 10A	100V, 50A
500	75V, 20A	500V, 100A
50	100V, 25A	750V, 200A
5	100V, 50A	1000V, 1000A

3.8.2 Protection design. Detailed analyses of suppression component and electronic equipment circuit characteristics are required to select components compatible with the requirements of para. 3.5 and to provide suppression circuits that will function without adversely affecting signals and information transmitted by individual landlines. Typical configurations for protection of electronic equipment from conducted landline transients are illustrated in Figure 1. Design requirements for selection of components are as follows:

Information Handling Services, 1999
August 11, 1999 06:32:53

(a) Unipolar suppression components shall be selected and installed for signals and voltages that are always positive or always negative relative to reference ground. Bipolar suppression components shall be selected for signals and voltages that are both positive and negative relative to reference ground.

(b) The total series resistance of the suppression circuits at both ends of a landline shall not degrade electronic equipment performance.

(c) The high energy protection components at facility entrances (varistor in Figure 1) shall be selected to reduce the magnitude of transient levels to equipment, clamping or limiting transient parameters safely below electronic equipment susceptibility levels for individual lines.

(d) The resistor, R1, shall limit the transient current conducted by the suppression component at electronic equipment entrances. The resistor, R1, shall ensure that the transient voltage at the facility entrance will turn on the facility entrance suppressor before the rated current level of the electronic equipment entrance suppressor is exceeded. The suppression components at the facility and electronic equipment entrances, and R1, shall be selected to function together.

(e) The electronic equipment entrance low energy suppressor shall be selected to clamp and limit the transient voltage and energy safely below electronic equipment circuit susceptibility levels.

(f) When the lowest voltage device available, such as silicon avalanche suppressors, will not adequately limit the transient voltage to electronic equipment circuits, a properly sized resistor, R2, shall be used to further reduce transient voltages.

(g) Capacitor C1 shall be selected in conjunction with R2 to attenuate high frequency transient energy.

3.8.3 Functional requirements. The combined operating characteristics for landline transient suppression at facility and electronic equipment entrances and requirements for individual devices shall be as follows:

(a) Reverse standoff voltage. The operating or reverse standoff voltage rating of the suppression components shall not exceed 20 ± 5 percent above normal line voltage.

(b) Turnon voltage. Turnon voltage of the suppression components shall be as close to reverse standoff voltage as possible using state-of-the-art devices, and shall not exceed 125 percent of reverse standoff voltage.

(c) Overshoot voltage. Overshoot voltage amplitude and duration limits shall be low enough to preclude electronic equipment damage or operational upset. The requirement shall apply for transients with rise times up to 5,000 V/μs.

Information Handling Services, 1999
August 11, 1999 06:32:53

(d) Clamp (discharge) voltage. Clamp voltage shall be below the electronic equipment susceptibility levels while dissipating the transients listed in Table III.

(e) Operating life. The transient suppression system shall dissipate the transients defined in Table III. Clamp voltage levels shall not change more than 10 percent over the operating life of the suppression system.

(f) Self-restoring capability. The transient suppression system shall automatically return to the off state when the transient voltage level drops below turnon voltage for the suppressors.

3.8.4 Installation at facility entrance. High energy transient suppression components for electronic equipment , signal, and control lines (sometimes refereed to as the A Bus) shall be housed in shielded compartmentized metal enclosures at the point where the landlines enter the facility. A ground bus bar, electrically isolated from the enclosure, shall be provided in the junction box to serve as an earth ground point for the high energy transient suppressors. The ground bus bar shall be directly connected to the earth electrode system with an insulated No. 4 AWG stranded copper wire of minimum length with no loops, sharp bends or kinks. The wire insulation shall be 600 volts color coded green with a bright red tracer. The ground bus bar location shall permit a short, direct connection to transient suppressors. The installation shall provide easy access to component terminals for visual inspection and test. Each suppression device shall be replaceable, or as a minimum, the suppressor and resistor for each line shall be replaceable as a unit.

3.8.5 Installation at electronic equipment. Low energy transient suppression components for electronic equipment (sometimes known as the A Bus) may be housed along with the high energy transient suppression components described in para. 3.8.4, or in a separate enclosure mounted to the electronic equipment rack or shielded as an integral part of electronic equipment design as defined in FAA-STD-020. Suppression component grounds shall be connected directly to the metal enclosure and then to the electronic equipment case (part of electronic multipoint ground system) with an insulated 600 Vac No. 6 AWG stranded copper conductor color coded green with a bright orange tracer. Access shall be provided for visual inspection and replacement of components.

3.8.6 Externally mounted electronic equipment. When landlines terminate directly to externally mounted electronic equipment, landline transient protection as described in paragraphs 3.8.4 and 3.8.5 for facility and electronic equipment entrances shall be combined and provided at the electronic equipment line entrance.

3.8.7 Axial landlines. Transient protection for electronic equipment using coaxial, tri-axial and twin-axial landlines not protected by ferrous conduit shall be provided both at facility entrances and at the electronic equipment. Lines protected externally by ferrous conduit require protection only at electronic equipment entrances. Transient suppression shall be provided equally for each conductor and shield that is not grounded directly to the electronic equipment case. The protection provided for electronic equipment

Information Handling Services, 1999
August 11, 1999 06:32:53

using axial landlines shall comply with the requirements given in para. 3.8 through 3.8.6 and the following:

3.8.7.1 Protection design. Special attention shall be given to the design of transient protection for axial-type lines. Design may be particularly critical at RF frequencies. The following design requirements apply.

(a) Suppression circuits shall be designed using components which have minimum effect upon the signals being transmitted.

(b) Suppression equipment layouts, circuit designs and enclosures shall be designed to minimize the effect on transmitted signals. Feedthrough components, leadless components, or short direct lead connections without bends improve performance of suppression circuits and reduce signal degradation.

(c) Analyses and tests shall be performed when necessary to assure that suppression components do not unacceptably degrade signals or cause marginal electronic equipment operation. Particular attention shall be given to impedance, insertion loss and voltage standing wave ratio for RF signals.

(d) When transient protection as specified herein cannot be provided for specific lines without unacceptable degradation of performance, alternative designs shall be submitted in writing for Contracting Officer approval.

3.8.7.2 Metal bulkhead connector plates. A metal bulkhead connector plate shall be provided where axial-type lines first enter a facility. The connector plate shall be a minimum of ¼ in. thick and shall be constructed of tinned copper or other material compatible with the connectors. When more than one is needed, the plate or plates shall have the required number and types of feed-through connectors to terminate the external lines. The connectors shall provide a path to ground for cable shields except when the shield must be isolated for proper equipment operation. If external and internal cables are of a different physical size, the changeover in connector size may be accomplished by the feed-through connectors at the plate. The bulkhead connector plate shall be bonded to the earth electrode system with a No. 2/0 AWG insulated copper cable, color coded green with a red tracer. Additionally, where building steel is properly bonded to the earth electrode system, the bulkhead connector plate shall be connected to building steel. Exothermic welds or FAA approved pressure connectors shall be used for these connections.

3.8.7.3 Installation at facility entrances. Transient suppression components for axial-type lines shall be installed in a sealed metal enclosure with appropriate connectors at each end to permit in-line installation at the bulkhead connector plate. The ground connection for varistors or other suppression devices used at facility entrances shall be isolated from the suppression circuit enclosure. An insulated ground lead shall be brought out of each suppression circuit enclosure and connected to an adjacent ground bus or tie point. The ground bus shall be isolated from the connector plate and connected directly to the facility earth electrode system with a dedicated No. 4 AWG insulated stranded copper conductor, colored green with a bright red tracer. (This ground conductor shall be separate from the conductor noted in

Information Handling Services, 1999
August 11, 1999 06:32:53

para. 3.8.7.2.) All ground leads and wire shall be as short as possible with no loops, sharp bends or kinks. Bonding to this isolated ground bus shall be by UL approved connectors. Exothermic welds or FAA approved pressure connectors shall be used for connections to the earth electrode system.

3.9 Lightning protection system requirements

3.9.1 General. The intended purpose of the lightning protection system is to provide preferred paths for lightning discharges to enter or leave the earth without causing facility damage or injury to personnel. The essential components of a lightning protection system are air terminals, roof and down conductors connecting to the earth electrode system, and the earth electrode system. These components act together as a system to dissipate lightning currents. The lightning protection system shall meet the requirements of the Lightning Protection Code, National Fire Protection Association (NFPA 78) and the Installation Requirements for Lightning Protection Systems, Underwriters' Laboratories (UL 96A) and as specified herein.

3.9.2 Materials. All equipment used shall be UL approved and marked in accordance with UL procedures. All equipment shall be new and of a design and construction to suit the application in accordance with UL 96A requirements, except that aluminum shall only be used on aluminum roofs, aluminum siding or other aluminum surfaces. Bronze and stainless steel may be used for some components. Aluminum materials shall not be used on surfaces coated with alkaline-base paint, on or embedded in masonry or cement, on copper roofing, in contact with copper materials, or underground. Bimetallic connectors shall be used for interconnecting copper and aluminum conductors. Dissimilar materials shall conform to the bonding requirements of para. 3.14.12.

3.9.3 Main conductors. Roof and down conductors shall be stranded and shall meet the requirements given in NFPA 78. Down conductors shall be routed outside of any structure and shall not penetrate or invade that structure except as indicated in para. 3.9.11, Antenna towers.

3.9.4 Hardware. Hardware shall meet the following requirements.

3.9.4.1 Fasteners. Roof and down conductors shall be fastened at intervals not exceeding 3 ft. (0.9 m). Fasteners shall be of the same material as the conductor base material or bracket being fastened, or other equally corrosion resistant material. Galvanized or plated materials shall not be used. See para. 3.14.13 for preparation of bonding surfaces.

3.9.4.2 Fittings. Bonding devices, cable splicers, and miscellaneous connectors shall be suitable for use with the installed conductor and shall be copper, bronze or aluminum with bolt pressure connections to the cable. Cast or stamped crimp type fittings shall not be used.

3.9.5 Guards. Guards shall be provided for down conductors located in or next to driveways, walkways or other areas where they may be displaced or damaged. Guards shall extend at least 6 ft. (1.8 m) above and 1 ft. (0.3 m) below grade level. Guards shall be metal or schedule 40 polyvinyl chloride

Information Handling Services, 1999
August 11, 1999 06:32:53

(PVC) pipe. Metal guards shall be bonded to the down conductor at both ends. Bonding jumpers shall be of the same size as the down conductor. PVC guards do not require bonding. Crimp type fittings shall not be used.

3.9.6 Bonds. Certain metallic bodies located outside or inside a structure contribute to lightning hazards because they are grounded or assist in providing a path to ground for lightning currents. Such metallic bodies shall be bonded to the lightning protection system wherever it is likely for a side flash to occur between the lightning protection system conductors and a grounded metal body. This shall be done in accordance with NFPA 78. Bonding should also be applied to other metal bodies, permanently affixed to the structure, because of their size or relative position to the lightning protection system conductor.

3.9.6.1 Metallic bodies subject to direct lightning discharge. Metallic bodies, on roofs, subject to direct lightning discharge are generally any large metallic body whose size causes it to protrude beyond the zone of protection of the installed air terminals. This includes exhaust fans, metal cooling towers, HVAC units, ladders, railings, antennas, and large louvered structures. When these metallic bodies have a metal thickness of 3/16 in. or greater, they shall be bonded to the nearest main lightning protection system conductor with UL approved fittings and conductors meeting the requirements of NFPA 78. These bonding fittings shall provide surfaces of not less than 3 square inches. Provisions shall be made to prevent corrosive effects introduced by galvanic action of dissimilar metals at bonding points. If the metal parts of these units are less than 3/16 in. thick, additional approved air terminals, conductors and fittings, providing a two way path to ground from the air terminals, shall be installed.

3.9.6.2 Metallic bodies subject to induced charges. Metallic bodies, on or below roof level, that are subject to induced charges from lightning include roof drains, plumbing vents, metal coping, metal flashing, gutters, downspouts, small metal wall vents, door and window frames, metal balcony railings, and in general any isolated metallic body within 6 ft. of an exposed lightning protection system element. These metallic bodies shall be bonded to the lightning protection system using UL approved splicers, fittings and conductors. Conductors used for bonding these metallic bodies shall be Class I secondary conductors in accordance with NFPA 78.

3.9.7 Conductor and conduit routing. Roof and down conductors shall maintain a horizontal or downward course. No bend in a roof or down conductor shall form an included angle of less than 90 degrees, nor shall it have a bend radius of less than 8 in. (203 mm). Conductors shall be routed external to buildings and 6 ft. (1.8 m) or more from power or signal conductors.

3.9.8 Down conductor terminations. Down conductors used to ground air terminals and roof conductors, shall terminate on buried ground rods, 1 ft. (0.3 m) to 2 ft. (0.6 m) vertically below ground level and from 2 ft. (0.6 m) to 6 ft. (1.8 m) outside the foundation or exterior footing of the building. Down conductors shall be connected to the ground rods by exothermic welding.

Information Handling Services, 1999
August 11, 1999 06:32:53

3.9.9 Disconnects. All down conductors except one may be provided with a screw type connector as described in UL 96 where lightning protection system testing may be required.

3.9.10 Buildings. Lightning protection shall be provided for all buildings, or parts thereof, not within a zone of protection provided by another building or higher part of a building, or by an antenna or tower. Zones of protection for all structures shall be as defined in NFPA 78.

3.9.10.1 Air terminals. Air terminals shall be solid copper, bronze or aluminum. Copper air terminals may be nickel plated. Air terminals shall be a minimum of 12 in. (305 mm) in height, at least ½ in. (12.7 mm) in diameter for copper and 5/8 in. (15.9 mm) in diameter for aluminum, and shall have a rounded or "bullet" point. Air terminals shall be located in accordance with the requirements of NFPA 78 and UL 96A. Air terminals shall extend at least 10 in. above the object or area it is to protect. Air terminals shall be placed on the ridges of pitched roofs and around the perimeter of flat or gently sloping roofs at intervals not exceeding 20 ft. (6 m) except that air terminals 24 in. (600 mm) or higher may be placed at intervals not exceeding 25 ft. (7.6 m).

> SAFETY NOTE: Where a personnel injury risk exists, should a person fall and strike an air terminal, the tip of the air terminal shall not be less than 5 ft. above the walking or working surface.

3.9.10.2 Number of down conductors. Not less than two down conductors shall be provided for buildings with perimeters of 250 ft. (76 m) or less. Down conductors shall be as widely separated as possible, i.e. at diagonally opposite corners on square or rectangular buildings. Buildings with perimeters in excess of 250 ft. (76 m) shall have one down conductor for each 100 ft. (30.5 m) of perimeter distance or part thereof.

3.9.10.3 Metal parts of buildings. Metal roofing, siding, eave troughs, down spouts, ladders, ducts and similar metal parts shall not be used as substitutes for roof or down conductors. A lightning conductor system shall be applied to the metal roof and to the metal siding of a metal clad building in the same manner as on a building without metal covering. Building metal parts shall be bonded in accordance with para. 3.9.6.

3.9.10.4 Roof mounted antennas. If metallic, the mast of a roof mounted antenna shall be bonded to the nearest roof or down conductor using UL approved fittings and conductors. The bonding jumper shall be of the same size and material as the roof or down conductor to which it is connected.

3.9.11 Antenna towers. Antenna towers shall be provided with lightning protection in accordance with the following:

3.9.11.1 Number of down conductors. Pole type towers shall have one down conductor. Towers which consist of multiple, parallel segments or legs which sit on a single pad or footing not over nine square feet in area are considered pole type towers. All other towers shall have at lease two down

Information Handling Services, 1999
August 11, 1999 06:32:53

conductors. Down conductors for all tower types shall be bonded to each tower section. Down conductors shall be routed down the inside of the legs wherever practical and secured at intervals not exceeding 3 ft. (0.9 m) in accordance with para. 3.9.4.1.

3.9.11.2 Towers without radomes. Towers without radomes shall be protected by one or more air terminals to provide a zone of protection for all antennas located on the tower in accordance with NFPA 78. Protection may be provided for large RADAR antennas by extending structural members above the antenna and mounting the air terminal on top as shown in Figure 2, Lightning Protection for Radomes and Radar Antenna Platforms. Structural members shall be braced as required and shall not be used as part of the air terminal. The air terminal shall be supported on the structural member and shall have an UL approved fitting on its base. The air terminal shall be connected to a conductor installed around the perimeter of the tower platform. Down conductors as defined in para. 3.9.11.1 shall be run from the perimeter cable to the earth electrode system. Except where only one down conductor is required, each air terminal shall be provided with at least two paths to ground. All conductors shall be UL approved and in accordance with NFPA 78 for main conductors.

3.9.11.3 Towers with radomes 25 ft. in diameter or less. Towers with spheroidal radomes 25 ft. (7.6 m) and less in diameter shall be protected with a single 2 ft. (0.62 m) air terminal at the radome peak. Two down conductors shall be routed, following the contour of the radome, from the air terminal to a peripheral conductor that forms a closed loop around the base of the radome. Framing having a zigzag pattern shall not be used because the path thus established is not suitable for lightning protection. Two down conductors shall be installed down opposite tower legs to the earth electrode system from the peripheral conductor in accordance with para. 3.9.11.1.

3.9.11.4 Towers with radomes greater than 25 ft. in diameter. Towers with spheroidal radomes greater than 25 ft. (7.6 m) in diameter shall be protected with a 2 ft. (0.62 m) air terminal at the peak and four air terminals equally spaced around the circumference of the radome. Spacing of the four circumferential air terminals may be adjusted if the antenna pattern is affected, but their position and height shall establish a protection zone as defined by NFPA 78. Metal framed radomes, if electrically continuous throughout, may be used instead of the four lower mounted air terminals. The electrically continuous path of the radome when substituted for the four air terminals must provide a straight line path. Framing having a zigzag pattern shall not be used because the path thus established is not suitable for lightning protection. The four additional air terminals shall be interconnected with a main size conductor. This conductor shall be connected to the air terminal on the peak with two down conductors and to the perimeter cable that forms a loop around the base of the radome with two down conductors. The down conductors noted above shall be run in a straight downward path following the contour of the radome as shown in Figure 2. The perimeter cable shall be connected to the earth electrode system with a minimum of two down conductors in accordance with para. 3.9.11.1. All conductors shall be UL approved for lightning protection systems and sized in accordance with the requirements of NFPA 78.

Information Handling Services, 1999
August 11, 1999 06:32:53

Conductors in the radome (down conductors and perimeter) shall be supported with approved fittings at intervals not exceeding 3 ft. (0.9 m).

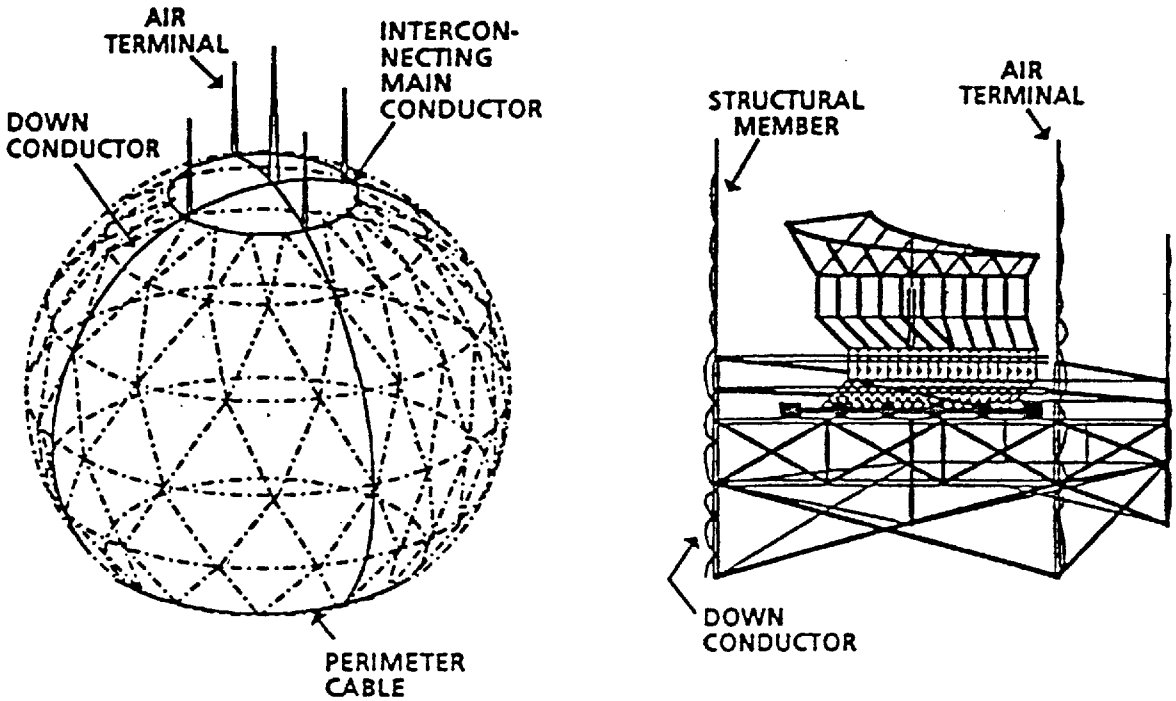

NOTES:

1. On a metal platform, four (4) platform mounted air terminals may be used.
2. Where a radome has an electrically continuous frame, the framing may be used in lieu of the lower four (4) air terminals shown.
3. Regardless of the protection configuration used, a minimum of two (2) down conductors shall be used to connect the air terminals to earth ground.

Figure 2. Lightning Protection for Radomes and RADAR Antenna Platforms

3.9.11.5 Antenna protection. Air terminals shall be placed to protect structural towers and buildings, and antennas mounted to towers and on buildings.

3.9.12 Fences

3.9.12.1 Fences and gates. Fences made of conducting material, i.e. chain link fabric, metal crossbar, stranded wire, shall be constructed using metal

posts which extend a minimum of 2 ft. (0.6 m) below grade. Gates shall have a 1 in. by 1/8 in. flexible tinned copper bond strap to the adjacent post. The posts at each side of the gate shall also be bonded together with a 2/0 AWG bare stranded copper cable. Bonds to these posts shall be 6 in. above grade. Metallic fence fabric with non-conductive coatings shall not be used.

3.9.12.2 Overhead power line considerations. When a fence constructed of conducting material is crossed by overhead power lines, the fence shall be bonded with bare No. 6 AWG copper conductors a minimum of 20 ft. to each side of the crossing. For a chain link fence, the fabric shall be bonded at each side to this conductor at the top, middle and bottom and at each strand of security wire placed above the fencing fabric. Where cross bar or stranded wire is used, each horizontal strand or cross bar shall be bonded top-to-bottom to the conductor.

3.10 Earth electrode system requirements

3.10.1 General. An earth electrode system shall be installed at each facility to provide a low resistance to earth for lightning discharges, electrical and electronic equipment grounding, power fault currents and surge and transient protection. The earth electrode system shall be capable of dissipating within the earth the energy of direct lightning strikes with no ensuing degradation to itself. The system shall dissipate DC, AC and RF currents from equipment and facility grounding conductors. The system shall also be capable of conducting power system fault currents to earth for the time required to operate protective devices.

3.10.2 Site survey. A site survey shall be made to determine its relevant geological and physical characteristics. Information shall be obtained regarding the location of rock formations, gravel deposits and soil types in the immediate vicinity. In addition, the survey shall determine frost line depth, the depth and variations of the water table and the locations of buried metallic objects such as pipe lines and storage tanks. Soil resistivity measurements shall be made at distances of 10, 20, 30, and 40 ft. (3, 6, 9 and 12 m) in four directions from the proposed facility. All survey data, including soil resistance measurements, shall be noted on a scaled drawing or sketch of the site. Guidelines are provided in FAA Orders 6950.19 and 6950.20.

3.10.3 Design. The earth electrode system shall normally consist of driven ground rods, buried interconnecting cables and connections to underground metallic pipes, tanks and structural members of buildings that are effectively grounded. The design goal for the resistance to earth of the earth electrode system shall be as low as practicable, and not over 10 ohms unless otherwise specified in the contract document. Where conditions are encountered, such as rock near the surface, designs for optimum grounding using copper plates installed to slope away from structure as steep as possible and/or horizontal grids of conductors as a counterpoise plane shall be used in lieu of driven ground rods.

3.10.4 Configuration. Unless otherwise specified, the earth electrode system shall consist of at least four ground rods that penetrate to the lowest resis-

Information Handling Services, 1999
August 11, 1999 06:32:53

tance as determined by the site survey, see para. 3.10.2 and 3.10.3. At facilities that have two or more structures, i.e. a building and antenna tower, separated by 15 ft. (4.5 m) or less, one earth electrode system surrounding both structures shall be provided. Where structures are separated by more than 15 ft. (4.6 m) but less than 30 ft. (8.2 m), the earth electrode system may share a common side. Where the structures are separated by more than 30 ft. (8.2 m) an earth electrode system shall surround each structure and the earth electrode systems shall be interconnected by at least one buried cable. Guidelines are provided in FAA Orders 6950.19 and 6950.20.

3.10.5 Ground rods. Ground rods and their installation shall meet the following requirements.

3.10.5.1 Material and size. Ground rods shall be copper or copper clad steel, a minimum of 10 ft. (3 m) in length and 3/4 in. (19 mm) in diameter. Rod cladding shall not be less than 1/64 in. (19 mm) thick.

3.10.5.2 Spacing. Ground rods shall be as widely spaced as practical, and in no case spaced less than one rod length. Nominal spacings between rods should be between two and three times rod length.

3.10.5.3 Depth of rods. Tops of ground rods shall be not less than 1 ft. (0.3 m) below grade level.

3.10.5.4 Location. Ground rods shall be located 2 to 6 ft. (0.6 to 1.8 m) outside the foundation or exterior footing of the structure. On buildings with overhangs ground rods may be located further out.

3.10.6 Interconnections. Ground rods shall be interconnected by a buried, bare, No. 4/0 AWG stranded copper cable. The cable shall be buried at least 2 ft. (0.6 m) below grade level. Connections to the ground rods shall be made by exothermic welding or other FAA approved method as specified herein. The interconnecting cable shall close on itself forming a complete loop with the ends exothermically welded or connected with an FAA approved hydraulically crimped pressure connector. The structural steel of buildings shall be connected to the earth electrode system at approximately every other column at intervals averaging not over 60 ft. (18.3 m) with a bare, No. 4/0 AWG stranded copper cable. Connections shall be by exothermic welds. The grounding electrode conductor for the electric service, sized in accordance with the NEC requirement for grounding electrode conductors, shall not be smaller than No. 6 AWG and shall be connected to a ground rod in the earth electrode system with an exothermic weld or FAA approved pressure connector. All underground metallic pipes and tanks, and the telephone ground, if present, shall be connected to the earth electrode system by a copper cable no smaller than No. 2 AWG. Where routed underground, interconnecting cables shall be bare. Exothermic welds shall not be used where hazards exist, i.e. near fuel tanks. In these cases, connections using FAA approved pressure connectors will be allowed. Bonding resistance of all interconnections shall be one (1) milliohm or less for each bond when measured with a 4-terminal milliohm meter.

Information Handling Services, 1999
August 11, 1999 06:32:53

3.10.7 Access well. Access wells are permissible at facilities. The well should be located at a ground rod that is in an area with access to open soil so that checks of the earth electrode system can be made once the facility is in use. The access well shall be made from clay pipe, poured concrete, or other approved wall material and shall have a removable cover. The access well shall have a minimum opening area of 175 square inches and be of sufficient size to allow ground rod connections to be readily disconnected and reconnected. These connections shall be by FAA approved explosively crimped pressure connectors per para. 3.14.6.3.

3.11 Electronic multipoint ground system requirements

3.11.1 General. The protection of electronic equipment against potential differences and static charge buildup shall be provided by interconnecting all non-current-carrying metal objects to an electronic multipoint ground system that is effectively connected to the earth electrode system. The multipoint ground for electronic equipment systems consists of electronic equipment, racks, frames, cabinets, conduits, raceways, wireways, cable trays enclosing electronic conductors, structural steel members, and conductors used for interconnections. The electronic multipoint ground system shall also provide multiple low impedance paths between various parts of the facility, electronic equipment within the facility, and any point within the system and the earth electrode system to minimize the effects of spurious currents that may be present in the ground system. It is essential that no power or single point grounds utilize this system. The multipoint ground system is also not to be used as a signal return path. A typical ground system is shown in Figure 3, "Facility Ground System Configuration".

3.11.1.1 Raised floors. Electronic equipment rooms may utilize a properly bonded, electrically continuous, grounded raised floor, consisting of bolted grid (stringer) or rigid grid system, as part of an electronic multipoint grounding system. The raised floor may then be used as part of an equipotential surface for the electronic equipment in the room.

3.11.2 Ground plates, cables and protection. The electronic multipoint ground system shall not replace the equipment grounding conductor routed with the phase and neutral conductors as required by the NEC. At least two connections between the multipoint ground system and the earth electrode system shall be provided. One connection shall be provided by a 500 MCM or equivalent copper cable connected between the main ground plate and the earth electrode system. In buildings without structural steel members, a second connection shall be provided by a 500 MCM or equivalent copper cable connected between the earth electrode system and a supplemental ground plate on the opposite side of the facility. The cable shall be exothermically welded to the earth electrode system and bolted to the ground plate or bus with a UL approved connector. Connection points shall be chosen to minimize cable length, but shall not exceed 50 feet. In steel structures, additional connections shall be made between each ground plate or bus and the structural steel.

3.11.2.1 Ground plates and buses. A ground plate shall be used when a centralized connection point is desired. The location shall be chosen to

Information Handling Services, 1999
August 11, 1999 06:32:53

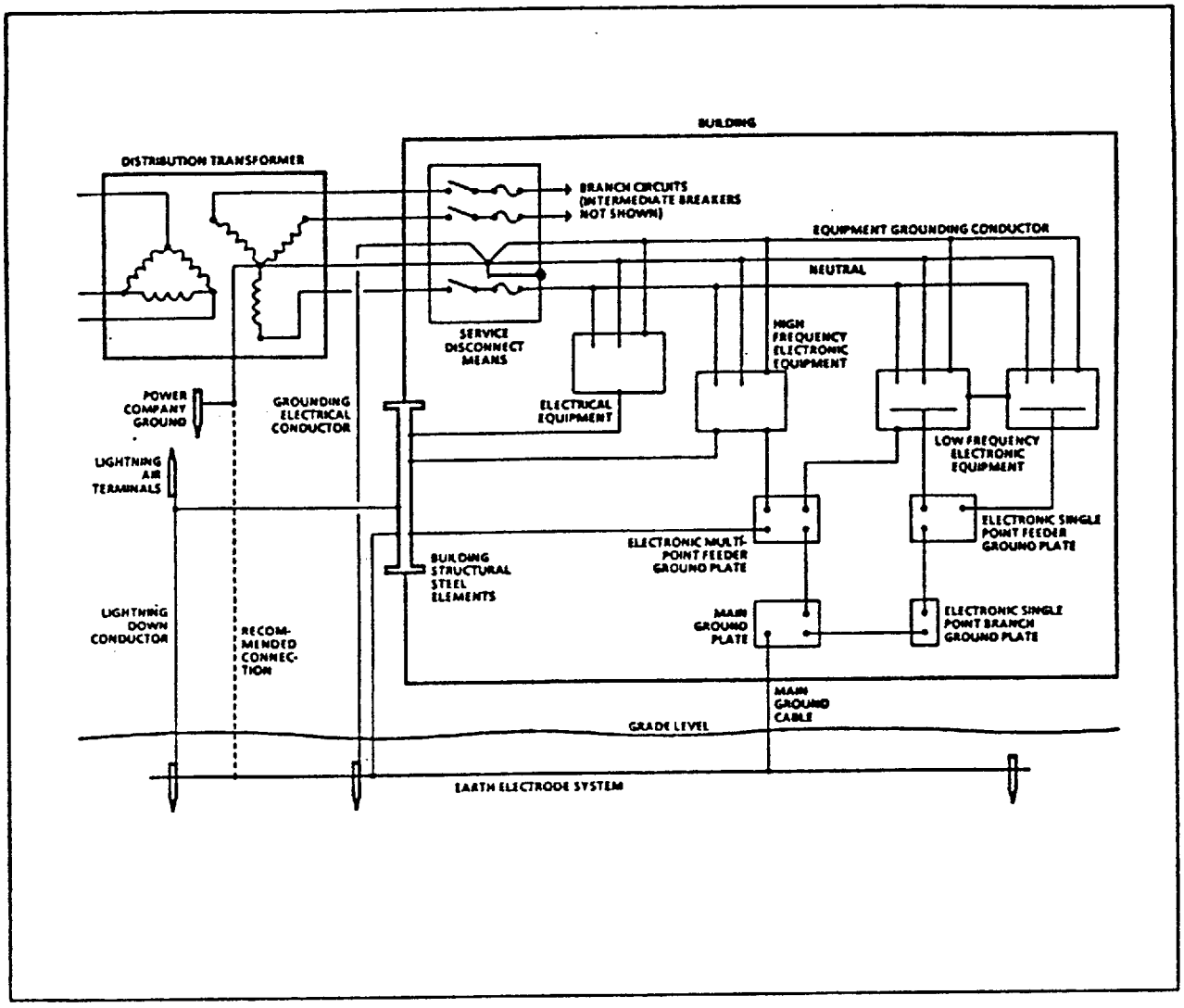

Figure 3. Facility Ground System Configuration

facilitate the interconnection of all equipment cabinets, racks and cases within a particular area. If more than one ground plate is required, they shall be installed at various locations within the facility. Ground buses shall be used when distributed grounding is desired with a long row of equipment cabinets. Ground plates shall be copper and at least 6 in. (152 mm) long, 4 in. (102 mm) wide and ¼ in. (6.4 mm) thick. Ground bus width and thickness shall be selected from Table IV, Size of Electronic Multipoint Ground Cables, according to the length required. Ground plates and buses shall be identified with a permanently attached plastic or metal label that is predominantly green with distinguishing bright orange slashes. The label shall bear the caption "ELECTRONIC MULTIPOINT GROUND SYSTEM" in black 3/8-in. high (10 mm) characters.

3.11.2.2 Ground cables. Interconnections in the electronic multipoint ground system between ground plates and buses and between ground plates and structural steel shall be made with stranded copper cable conforming to Table IV. These cables shall be color coded green with a bright orange tracer or shall be clearly marked for 4 in. at each end and wherever exposed with a green tape overlaid with a bright orange tracer. Where routed through raceways or wireways, the color coding shall be visible by opening any cover. Where conductors are routed through cable trays, color coding 4 in. long shall be provided at intervals not exceeding 3 ft.

TABLE IV, SIZE OF ELECTRONIC MULTIPOINT GROUND CABLES

Cable Size	Max. Path Length		Bus Bar Size		Max. Path Length	
	Ft.	(m)	Inch	(mm)	Ft.	(m)
750 MCM*	375	(114.3)	4 x 1/4	(100 x 6.4)	636	(193.9)
600 MCM*	300	(91.4)	4 x 1/8	(100 x 3.2)	318	(96.9)
500 MCM	250	(76.2)	3 x 1/4	(75 x 6.4)	476	(145.1)
350 MCM	175	(53.3)	3 x 1/8	(75 x 3.2)	238	(72.5)
300 MCM	150	(45.7)	2 x 1/4	(50 x 6.4)	318	(96.9)
250 MCM	125	(38.1)	2 x 1/8	(50 x 3.2)	159	(48.5)
4/0 AWG	105	(32.0)	2 x 1/16	(50 x 1.6)	79	(24.1)
3/0 AWG	84	(25.6)	1 x 1/4	(25 x 6.4)	159	(48.5)
2/0 AWG	66	(20.1)	1 x 1/8	(25 x 3.2)	79	(24.1)
1/0 AWG	53	(16.2)	1 x 1/16	(25 x 1.6)	39	(11.9)
1 AWG	41	(12.5)				
2 AWG	33	(10.1)				
4 AWG	21	(6.4)				
6 AWG	13	(4.0)				
8 AWG	8	(2.4)				

NOTE: MCM* - Where these cables are not available, parallel cables may be used such as three 250 MCM cables in place of one 750 MCM cable, or two 300 MCM cables in place of one 600 MCM cable.

3.11.2.3 Protection. Provide mechanical protection for all cables in the electronic multipoint ground system where they may be subject to damage. This protection may be provided by conduit, floor trenches, routing behind permanent structural members, or other means as applicable. Where routed through metal conduit, the conduit shall be bonded to the cable at each end.

3.11.3 Building structural steel. All structural members such as building columns, wall frames, roof trusses of steel frame buildings and other metal structures shall be made electrically continuous by bonding each joint and interconnection in accordance with para. 3.14.9.4. The structural steel shall be connected to the earth electrode system as specified in para. 3.10.6.

Information Handling Services, 1999
August 11, 1999 06:32:53

3.11.3.1 Metal building elements. The requirements of this paragraph apply to facilities which have sensitive receiver or computing systems and are located in areas where radiation from radar or other high power transmitters is expected. Metal building elements and attachments such as walls, roofs, floors, door and window frames, gratings and other architectural features shall be directly bonded to structural steel in accordance with para. 3.14.9.4. Where direct bonding is not practical, indirect bonds with copper cable conforming to Table IV shall be employed. Removable or adjustable parts and objects shall be grounded with an appropriate type bond strap as specified in para. 3.14.7. All bonds shall conform to the requirements of para. 3.14. Metal elements with a maximum dimension of 3 ft. (0.9 m) or less are exempt from the requirements of this paragraph.

3.11.4 Interior metallic piping systems. The interior metallic cold water piping system shall be bonded to the service disconnecting means ground point or to the earth electrode system. The bonding jumper shall be sized in accordance with the NEC. All other interior metallic piping which may become energized shall be bonded as specified for equipment grounding conductors. The bonding jumper shall be sized in accordance with the NEC using the rating of the circuit which may energize the piping.

3.11.4.1 Ground connections. Clamps providing continuous follow-up pressure shall be used to bond pipes and tubes to the equipment ground system. In highly humid or corrosive atmospheres, adequate protection against corrosion shall be provided in accordance with para. 3.14.14.

3.11.5 Electrical supporting structures. All metallic electrical support structures shall be electrically continuous and shall be directly bonded to the electronic multipoint ground system and to the earth electrode system.

3.11.5.1 Conduit. All metal conduit used for electronic signal and control wiring shall be grounded as follows:

(a) All joints between conduit sections and between conduit, fittings, and boxes shall be electrically continuous. All pipe and locknut threads shall be treated with a conductive lubricant prior to assembly. Surfaces shall be prepared in accordance with para. 3.14.13. Joints that are not otherwise electrically continuous shall be bonded with short jumpers of No. 12 AWG or larger copper wire. The jumpers shall be welded or brazed in place or shall be attached with clamps, split bolts, grounding bushings, or other devices approved for the purpose. All bonds shall be protected against corrosion in accordance with para. 3.14.14.

(b) Cover plates of conduit fittings, pull boxes, junction boxes, and outlet boxes shall be grounded by securely tightening all available screws.

(c) Every component of metallic conduit runs such as individual sections, couplings, line fittings, pull boxes, junction boxes and outlet boxes shall be bonded, either directly or indirectly, to the electronic multipoint ground system or facility steel at intervals not exceeding 50 ft. (15 m).

Information Handling Services, 1999
August 11, 1999 06:32:53

(d) Conduit brackets and hangers shall be securely bonded to the conduit and to the metal structure to which they are attached.

3.11.5.2 Cable trays and wireways. The individual sections of all cable tray systems for electronic conductors shall be bonded together and each support bracket or hanger shall be bonded to the cable trays which they support. All bonds shall be in accordance with the procedures and requirements specified in para. 3.14. All tray assemblies for electronic conductors shall be connected, either directly or indirectly, to the electronic multipoint ground system or properly grounded facility steel within 2 ft. (0.6 m) of each end of the run and at intervals not exceeding 50 ft. (15 m). The resistance of each of these connections shall not exceed 5 milliohms.

3.11.6 Secure facilities. In all areas of facilities required to maintain communications security, equipment and power systems shall be grounded in accordance with NACSIM-5203.

3.12 Electronic single point ground system requirements

3.12.1 General. The electronic single point ground system shall be isolated from the electronic multipoint ground system, power grounding system and lightning protection system. The electronic single point ground system shall be terminated at the main ground plate or to the earth electrode system. The network shall be configured to minimize cable lengths. Conductive loops in the network shall be avoided by maintaining a trunk and branch arrangement as shown in Figure 3 and Figure 4, "Electronic Single Point Ground System Installation".

3.12.2 Ground plates. Main, branch and feeder ground plates shall be of copper and at least 6 in. (152 mm) long, 4 in. (102 mm) wide, and ¼ in. (6.4 mm) thick. The plates shall be mounted on phenolic or other non-conductive material of sufficient cross section to rigidly support the plates after all cables are connected. Bolts or other devices used to secure the plates in place shall be insulated or shall be of a non-conducting material. The plates shall be mounted in a manner that provides ready accessibility for future inspection and maintenance.

3.12.3 Isolation. The minimum resistance between the electronic single point ground and the electronic multipoint ground systems shall be 10 megohms. The resistance shall be measured after the complete network is installed and before connection to the earth electrode system or to the electronic multipoint ground system at the main ground plate.

3.12.4 Resistance. The maximum resistance between any ground plate and any cable connected to the plate shall not be greater than 1 milliohm.

3.12.5 Ground cable size. The size of the main, trunk and feeder ground cables shall be as follows:

3.12.5.1 Main ground cable. An insulated copper cable shall be installed from the isolated ground lug at the electronic equipment, or from single point

Information Handling Services, 1999
August 11, 1999 06:32:53

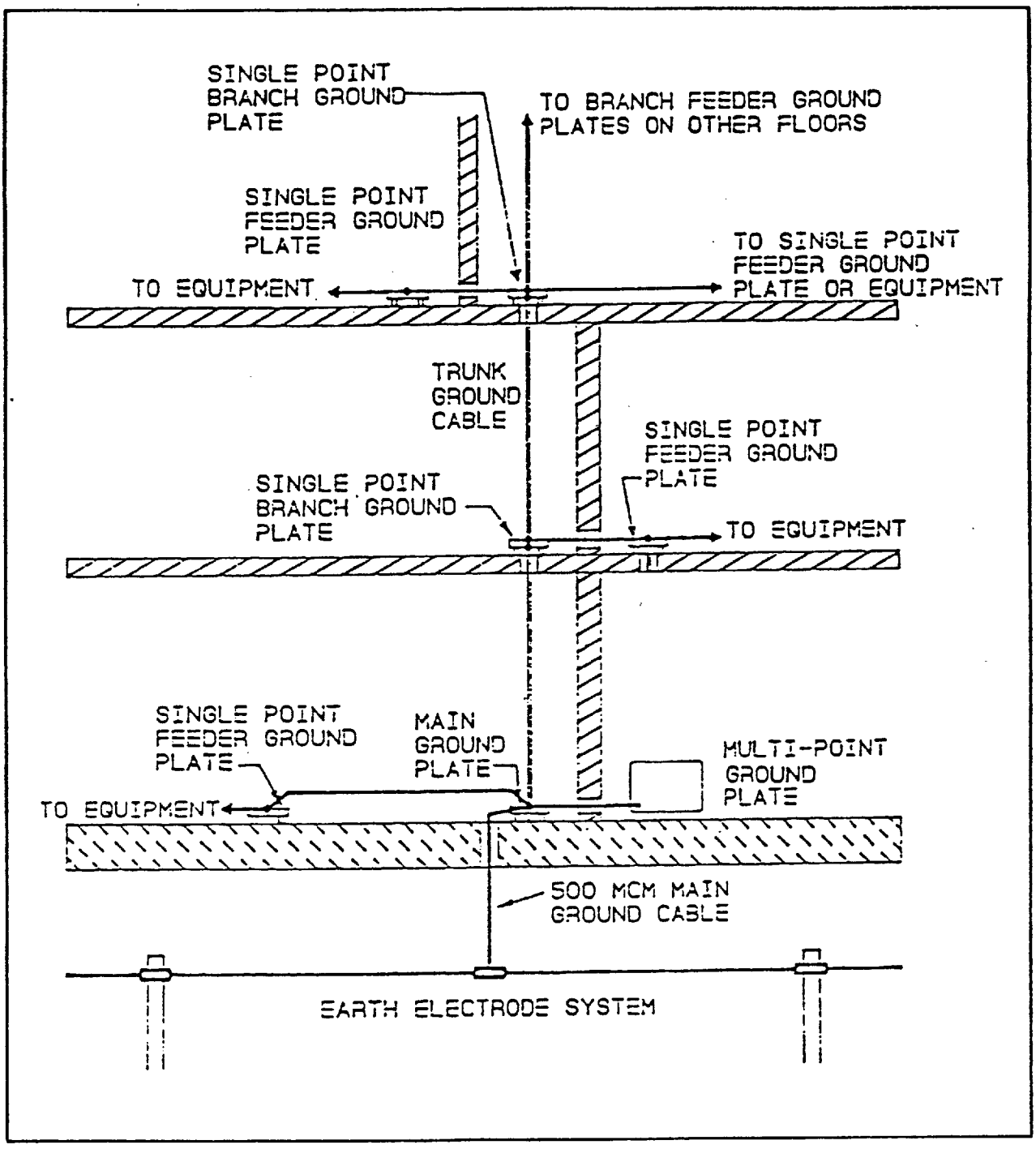

Figure 4. Electronic Single Point Ground System Installation

feed or branch ground plates to the main ground plate or the earth electrode system. The conductor shall be sized in accordance with para. 3.12.5.3 Branch ground cables. This cable shall be routed as shown on the facility drawings. One end of the cable shall be exothermically welded to the earth electrode

system. The other end shall be bolted to the main ground plate in accordance with para. 3.14.6. This cable shall be mechanically protected by enclosing it in PVC conduit or by routing it in other non-metallic material, in floor trenches or behind permanent structural members.

3.12.5.2 Trunk ground cables. An insulated trunk ground cable shall be installed in each facility from the main ground plate to each of the branch plates as shown in Figure 4. This cable shall be 4/0 for lengths up to 400 ft. For longer runs, select a cable size based on providing a cross sectional area of 500 cmil per running foot of cable length. Trunk ground cables shall be bolted to the ground plates in accordance with para. 3.14.6 and shall be mounted as shown on the facility drawings. Trunk ground cable protection shall be identical to that required for main ground cable, see para. 3.12.5.1.

3.12.5.3 Branch ground cables. Insulated copper branch ground cables shall be installed between feeder and branch ground plates. These cables shall be routed to provide the shortest practical path. Branch ground cables shall be No. 2 AWG for lengths less than 75 ft. (22.9 m) and 1/0 AWG for lengths between 75 ft. and 150 ft. (45.7 m). A No. 4/0 AWG cable shall be used for lengths greater than 150 ft. Branch ground cables shall be bolted to the feeder and branch ground plates in accordance with para. 3.14.6. Branch ground cable protection shall be identical to that required for main ground cable, see para. 3.12.5.1.

3.12.5.4 Electronic equipment ground cables. The cable from the feeder ground plate (branch ground plate if there is no need for a feeder ground plate in the cable run) to the isolated terminal or bus on the electronic equipment shall also meet the 500 cmil per running foot requirement. The minimum size cable shall be an insulated No. 16 AWG for cable lengths not more than 5 ft. For runs over 5 ft. the cable size shall be increased accordingly. Runs up to 10 ft. shall be No. 12 AWG minimum. Care shall be taken to locate a ground plate close to the electronic equipment so that cable size may be kept small enough to avoid problems with connections to electronic equipment.

3.12.5.5 Interconnections. All connections to the single point ground system shall be made on ground plates or buses. Split bolts, Burndy clamps and other connections to existing cables are not allowed.

3.12.6 Labeling. The single point ground system shall be clearly labeled to preserve its integrity as described in the following sections.

3.12.6.1 Cables. Trunk, branch and electronic equipment ground cables shall be color coded green with a bright yellow tracer. Where cables are concealed and not color coded, any exposed portion of the cable and each end of the cable for a minimum length of 2 ft. (0.6 m) shall be color coded by green tape overlaid with bright yellow tape to form the tracer. Where routed through raceways or wireways, color coding shall be visible by opening any cover. Where conductors are routed through cable trays, color coding 4 in. in length shall be applied at intervals not exceeding 3 ft.

Information Handling Services, 1999
August 11, 1999 06:32:53

3.12.6.2 Ground plates. All ground plates shall be provided with a clear plastic protective cover spaced 3/4 in. (19 mm) from the plate and extending 1 in. (25.4 mm) beyond each edge. This cover shall have a green label with distinguishing bright yellow slashes attached bearing the caption: "CAUTION, ELECTRONIC SINGLE POINT GROUND" in black 3/8-in. high (10 mm) characters.

3.13 National Electrical Code (NEC) grounding compliance.

3.13.1 General. The facility electrical grounding shall comply with the grounding requirements of Article 250 of the NEC and as specified herein. The electronic multipoint ground system shall not replace the equipment grounding conductor required by the NEC.

3.13.2 Grounding electrode conductors. Grounding electrode conductors shall conform to the following:

(a) Premises wiring required by the NEC to be grounded shall have the identified (neutral) conductor connected to the earth electrode system by a copper grounding electrode conductor at the service disconnecting means and by an additional copper grounding conductor from the neutral of the transformer secondary to a grounding electrode. The grounding electrode conductor shall be sized in accordance with the NEC, but in no case shall the wire size be smaller than No. 6 AWG.

(b) The grounding connection for services shall be made at the service disconnecting means.

(c) The grounding electrode conductor connecting the identified neutral wire (grounded conductor) to the earth electrode system shall be continuous and unspliced, except where splices and taps are permitted by the NEC (busbars and services consisting of more than a single enclosure). When a grounding electrode conductor is routed through a metal enclosure, e.g., conduit, the enclosure shall be bonded at each end to the grounding electrode conductor.

(d) Where two or more facilities are separately supplied by a common service, the grounded conductor shall be connected to the earth electrode system at each facility on the supply side of the disconnecting means. The grounded conductor shall not be grounded at other points within the facility.

(e) Where one facility receives its electrical power from another facility, the equipment grounding conductor shall be carried with the phase and neutral conductors in the same conduit or raceway and the grounded conductor (neutral) of the receiving facility shall not be grounded at that facility.

(f) For separately derived systems, other than the primary facility service, the grounded conductor (separately derived system neutral), i.e. transformer secondary neutral, shall be connected directly to the earth electrode system if feasible. The required connections shall be made only at one point on the separately derived system, before any system disconnecting means or over-current device, and at one point on the earth electrode system. This grounded conductor extension shall be copper and sized in accordance with NEC require-

Information Handling Services, 1999
August 11, 1999 06:32:53

ments, except that this conductor shall not be smaller than No. 6 AWG. In addition, the grounded conductor shall be bonded to the frame and case of the separately derived system. Equipment grounding conductors (safety grounds) shall also be connected between the separately derived system ground connection to the case and (1) its supply side distribution panel ground bus, and (2) its load side disconnecting means enclosure ground connection. These equipment grounding conductors shall be green insulated, unspliced and sized in accordance with NEC requirements. No neutral-to-ground connection shall be made at the load side disconnecting means enclosure.

3.13.3 Equipment grounding conductors. Equipment grounding conductors shall be installed in all branch circuits and feeders in accordance with FAA-C-1217 and the following:

(a) Where required for the possible reduction of electrical noise, receptacles shall be permitted in which the grounding terminal is purposely isolated from the receptacle mounting box. The receptacle grounding terminal shall be grounded by an insulated equipment grounding conductor run with the other circuit conductors (phase and neutral). This grounding conductor shall be permitted to pass through one or more panel boards without connection to these panel board ground terminals. This equipment grounding conductor shall terminate directly at the applicable derived system or service ground terminal. A second insulated equipment grounding conductor shall be installed from the metal outlet box to the panel board feeding this receptacle. This conductor shall be bonded at one end to the metal outlet box and connected at the other end to the ground bus in the panel feeding the isolated receptacle. Both equipment grounding conductors shall be run in the same conduit with their associated phase and neutral conductors.

(b) Equipment grounding conductors shall be sized in accordance with the NEC.

(c) Grounding terminals in all receptacles on wire mold or plug mold strips shall be hardwired to an equipment grounding conductor. Strips that depend upon serrated or toothed fingers for grounding shall not be used.

3.13.4 Color coding of conductors

3.13.4.1 Ungrounded conductors. The color coding of ungrounded conductors shall be consistent throughout the facility as follows:

(a) For two ungrounded 120/240V conductors, colors shall be black and red.

(b) For three ungrounded 120/208V service conductors, colors shall be black, red, and blue for phase A, B and C respectively. For 277/480V service, colors shall be yellow, brown and orange for phases A, B and C respectively.

(c) Where color coded conductors larger than No. 6 AWG are not available, other colors, except white, natural gray or green, may be used if they are re-identified as specified above with tape or paint.

Information Handling Services, 1999
August 11, 1999 06:32:53

(d) When ungrounded conductors are re-identified, color coding shall be applied at each end and at every point where the conductor is accessible. When routed through raceways or wireways, the coding shall be visible by opening any cover. When conductors are routed through cable trays, coding 3 in. (75 mm) in length at intervals not exceeding 3 ft. (0.9 m), shall be provided.

3.13.4.2 Grounded conductors. Color coding of grounded conductors shall be consistent throughout the facility as follows:

(a) Neutral conductors (grounded conductors) shall be insulated and color coded white for 120/208V and natural gray for 277/480V. Conductors larger than No. 6 AWG may be re-identified as the grounded (neutral) conductor except that green conductors shall not be re-identified. Re-identification of conductors is permitted only if proper color coded wire is not available.

(b) In any room, conduit, pullbox, raceway, wireway, or cable tray, where two or more grounded conductors of different systems are present (branch circuits, feeders, services, voltages, etc.), the grounded conductors shall be clearly identified. The identification of the grounded conductors for each system shall be consistent throughout the facility. The grounded conductor of one system may be white, natural gray or re-identified. The grounded conductors of the other systems shall be identified by paint, tape or by an identifiable colored stripe, not green, on white insulation.

(c) Color coding of grounded conductors shall be applied at each connection and at every point where the conductor is accessible. Where routed through raceways or wireways, the color coding shall be visible by removing or opening any cover. Where conductors are routed through cable trays, color coding 3 in. (75 mm) in length shall be provided at intervals not exceeding 3 ft. (0.9 m).

3.13.4.3 Color coding of equipment grounding conductors. Equipment grounding conductor color coding shall be consistent throughout the facility as follows:

(a) Electrical equipment grounding conductors shall be solid green in color. Insulated conductors larger than No. 6 AWG may be re-identified with green paint or tape. White or natural gray conductors shall not be re-identified as equipment grounding conductors.

(b) Color coding of equipment grounding conductors shall be applied at each connection and at every point where the conductor is accessible. Where routed through raceways or wireways, the coding shall be visible by removing or opening any cover. Where conductors are routed through cable trays, color coding 3 in. long shall be provided at intervals not exceeding 3 ft. (0.9 m).

3.13.5 Conductor routing. The neutral (grounded conductor) and equipment grounding conductors shall be routed through the same conduit, raceway, wireway or cable tray as the phase conductors. Power conductors shall not be routed in the same conduit or enclosed raceway with control, communications, or signal conductors or cables. Where power cables must be routed in the same cable tray with electronic cables, the power conductors shall be twisted in

Information Handling Services, 1999
August 11, 1999 06:32:53

accordance with Table V, Minimum Number of Twists for Power Conductors. For conductor sizes larger than No. 2 AWG, the conductors shall be twisted to the maximum extent practical.

3.13.6 Non-current-carrying metal equipment enclosures. Metal enclosures shall meet the following requirements:

(a) All non-current-carrying metal enclosures such as conduit, raceways, wireways, cable trays and panel boards shall be electrically continuous. Insulating finishes shall be removed between grounding areas of mating surfaces or bonding jumpers shall be used. Where bonding jumpers are used, the surface between the jumper and part to be bonded shall be cleaned of insulating finishes. Conduits shall employ bonding-type locknuts tightened sufficiently to cut through any surface coating, or shall employ grounding clamps or bushings.

TABLE V, MINIMUM NUMBER OF TWISTS FOR POWER CONDUCTORS

Size (AWG)	Twists per foot (0.3 m)			
	No. of Conductors			
	Two	Three	Four	Five
12	7	5	4	3
10	6	4	3	2.5
8	5	4	3	2
6	4	3	2	1.5
4	3	2	1.5	1
2	2.5	2	1.5	1

(b) Maximum use shall be made of ferrous materials for conduit, raceways, wireways and cable trays to provide shielding from the magnetic fields produced by power conductors.

3.14 Bonding requirements

3.14.1 Resistance. Unless otherwise specified in this standard, all bonds shall exhibit a resistance of 1 milliohm or less when measured between the bonded members with a 4-terminal milliohmmeter.

3.14.2 Methods. Unless otherwise specified, welded or brazed bonds shall be used. The surface contact area of bolted connections to flat surfaces in the lightning protection system shall be 3 square inches or greater. Soft soldered or brazed connections shall not be used for any part of the power grounding system or the lightning protection system (air terminals, roof conductors, down conductors, fasteners, and conduit). Soft solder shall only

Information Handling Services, 1999
August 11, 1999 06:32:53

be used to improve conductivity at load bearing joints. Soft solder shall not be used to provide mechanical restraint.

3.14.3 Exothermic welds. Exothermic welds may be used for any type of bond connection specified herein. Exothermic welds are preferred for all underground connections between earth electrodes, counterpoise cable and other connections to the earth electrode system. Exothermic welds may not be possible between certain materials or shapes.

3.14.4 Welds. Welds shall meet the following minimum requirements.

(a) Welds shall support the mechanical load demands on the bonded members.

(b) On members with a maximum dimension of 2 in. (50.8 mm) or less, the weld shall extend completely across the side or surface of the largest dimension.

(c) On members with a maximum dimension between 2 in. (50.8 mm) and 12 in. (305 mm), one weld of at least 2 in. in length shall be provided.

(d) On members with a dimension of 12 in. (305 mm) or more, two or more welds, each not less than 2 in. (50.8 mm) in length shall be provided at uniform spacings across the surface. The maximum spacing between welds shall not exceed 12 in.

(e) At butt joints, complete penetration welds shall be used on all members whose thickness is ¼ in. (6.4 mm) or less. Where the thickness of the members is greater, the depth of the weld shall be more than ¼ in.

(f) Fillet welds shall have an effective size equal to the thickness of the members.

(g) At lap joints between members whose thickness is less than ¼ in. (6.4 mm), double fillet welds shall be provided.

3.14.5 Brazing. Brazing shall be employed only in the electronic multipoint ground system as follows:

(a) Brazing or silver soldering may be used for the permanent bonding of copper conductors and copper alloy materials.

(b) Either brazing or exothermic welding shall be used for the permanent bonding of copper conductors to steel or other ferrous structural members.

(c) All residual fluxes shall be removed or neutralized to prevent corrosion.

(d) Brazing shall not be used for buried connections in the facility ground system.

(e) Brazing material shall meet the requirements for dissimilar metals as specified in Table VI, Acceptable Couplings Between Dissimilar Metals.

Information Handling Services, 1999
August 11, 1999 06:32:53

3.14.6 Mechanical connections

3.14.6.1 Bolted connections. Bolted connections shall conform to the following:

(a) All bolted connections shall conform to the torque requirements in Table VII, Minimum Torque Requirements for Bolted Bonds.

TABLE VI. ACCEPTABLE COUPLINGS BETWEEN DISSIMILAR METALS

	Magnesium	Magnesium alloy	Zinc	Clad 755	Clad 615	525	Clad 245	35	615-T6	755-T6	Cadmium	A175-T4	245-T4	145-T6	Wrought Steel	Steel Cast	50-50 Solder
Magnesium	•																
Magnesium alloy	•	•															
Zinc	•		•														
Clad 755	•	•		•													
Clad 615	•		•		•												
525	•	•	•	•		•											
Clad 245	•	•	•	•	•		•										
35	•	•	•	•	•	•		•									
615-T6	•	•	•	•	•	•	•		•								
755-T6	•	•	•	•	•					•							
Cadmium	•										•						
A175-T4	•	•	•	•	•							•					
245-T4	•	•	•	•	•								•				
145-T6	•	•	•	•	•	•								•			
Wrought Steel	•	•	•	•	•										•		
Steel Cast	•	•	•	•	•											•	
50-50 Solder	•																•

	50-50 Solder	Lead	Tin	Manganese Bronze	Brass	Aluminum Bronze	Copper	Nickel	Inconel	Type 410	Type 431	18-8 NiCr Steel	Titanium	Monel	Silver	Graphite
50-50 Solder	•															
Lead	•	•														
Tin	•	•	•													
Manganese Bronze	•	•	•	•												
Brass	•	•	•	•	•											
Aluminum Bronze	•	•	•	•	•	•										
Copper	•	•	•	•	•	•	•									
Nickel	•	•	•	•	•	•	•	•								
Inconel	•	•	•	•	•	•	•	•	•							
Type 410	•	•	•	•	•	•	•	•	•	•						
Type 431	•	•	•	•	•	•	•	•	•	•	•					
18-8 NiCr Steel	•	•	•	•	•	•	•	•	•	•	•	•				
Titanium	•	•	•	•	•	•	•	•	•	•	•	•	•			
Monel	•	•	•	•	•	•	•	•	•	•	•	•	•	•		
Silver	•	•	•	•	•	•	•	•	•	•	•	•	•	•	•	
Graphite	•	•	•	•	•	•	•	•	•	•	•	•	•	•	•	•

Notes:

1. Stainless steels, nickel, and inconel are considered passive on this chart.
2. Each metal on the chart is considered anodic (sacrificial) to the metals following it.
3. A solid dot (•) indicates an acceptable combination.

(b) Bolted connections shall be assembled in the order shown in Figure 5, "Order of Assembly for Bolted Connections". Load distribution washers, if used, shall be positioned directly underneath the bolt head. Lockwashers shall be placed between the nut and the primary members. Washers shall not be placed between bonded members. (See para. 3.14.13 for surface preparation.)

Information Handling Services, 1999
August 11, 1999 06:32:53

3.14.6.2 Hydraulically crimped. Mechanical connections using a Burndy "Hyground Connector" or equivalent when operated at a force of 24,000 pounds are acceptable as FAA approved pressure connectors. (These connectors are not acceptable in the lightning protection system.)

TABLE VII, MINIMUM TORQUE REQUIREMENTS FOR BOLTED BONDS

Bolt Size	Threads/Inch	Min. Torque (in-lbs)	Tension (lbs)	Bond Area (sq. in.)
No. 8	32	18	625	0.416
	36	20	685	0.456
No. 10	24	23	705	0.470
	32	32	940	0.626
1/4 in.	20	80	1840	1.225
	28	100	2200	1.470
5/16 in.	18	140	2540	1.690
	20	150	2620	1.750
3/8 in.	16	250	3740	2.430
	24	275	3950	2.640
7/16 in.	14	400	5110	3.400
	20	425	5120	3.420
1/2 in.	13	550	6110	4.070
	20	575	6140	4.090
5/8 in.	11	920	7350	4.900
3/4 in.	10	1400	9300	6.200
7/8 in.	9	1950	11100	7.400
1 in.	8	2580	12900	8.600

3.14.6.3 Explosively crimped. Mechanical connections using an AMP "Copper Tap Connector" or equivalent are acceptable as FAA approved pressure connectors for above grade connections and in access wells. (These connectors are not acceptable in the lightning protection system.)

3.14.7 Bonding straps and jumpers. Bonding straps, including jumpers, shall conform to the following:

(a) Bonding straps shall be attached to the basic member.

Information Handling Services, 1999
August 11, 1999 06:32:53

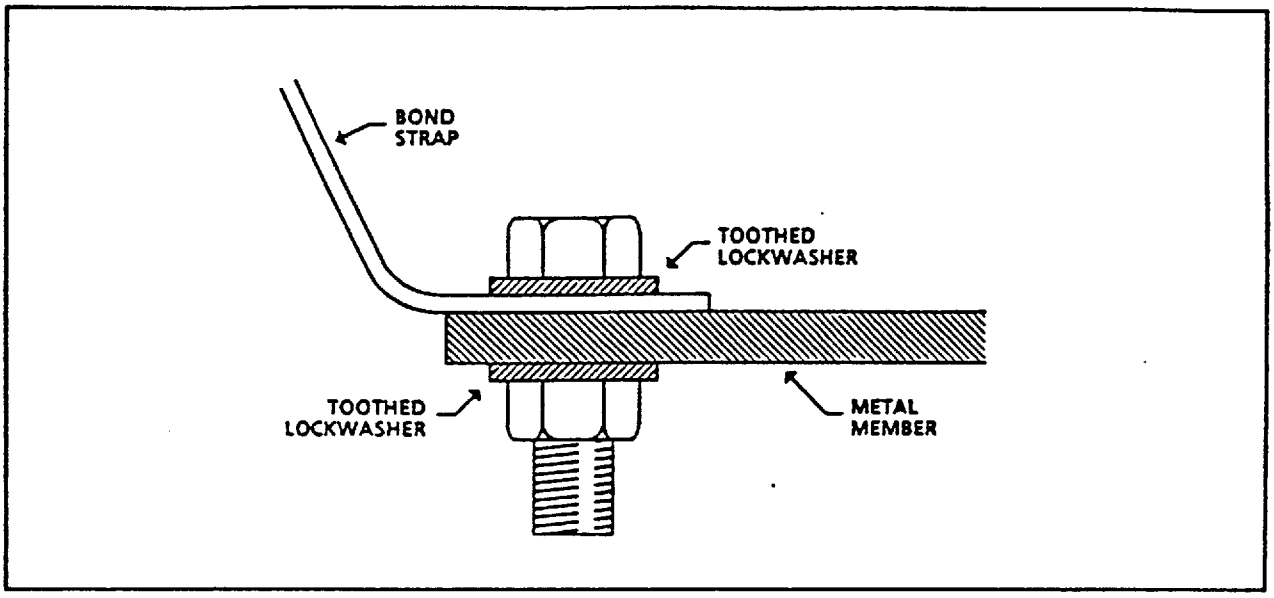

Figure 5. Order of Assembly for Bolted Connections

(b) Bonding straps shall be installed to be unaffected electrically by motion or vibration.

(c) Braided bonding straps shall not be used for bonding transmitters or other sources of RF fields.

(d) Bonding straps shall be installed whenever possible in areas accessible for maintenance.

(e) Bonding straps shall be installed so they will not restrict movement of the members being bonded or other members nearby which must be able to move as part of normal functional operation.

(f) Two or more bonding straps shall not be connected in series to provide a single bonding path.

(g) The method of installation and point of attachment of bonding straps shall not weaken the members to which they are attached.

(h) Bonding straps shall not be compression-fastened through non-metallic material.

3.14.8 Fasteners. Fastener materials for bonding aluminum and copper jumpers to structures shall conform to the materials listed in Table VIII, Metal Connections for Aluminum and Copper Jumpers.

3.14.9 Metal elements requiring bonding

3.14.9.1 Earth electrode risers. The earth electrode system shall be connected by exothermic welding to the down conductors of the Lightning Protection System, the Grounding Electrode Conductor, the grounding conductor from the Main Ground Plate of the electronics grounding system, and the conductors from the structural steel columns. Except for lightning protection down conductor terminations, other bonding connectors as specified in contract documents, e.g. hydraulically crimped connectors, may be used in place of exothermic welds. Explosively crimped connectors may be used in lieu of hydraulically crimped connectors where it is required that these connections be accessible, e.g. in access wells.

TABLE VIII, METAL CONNECTIONS FOR ALUMINUM AND COPPER JUMPERS

Metal Structure (Outer Finish Metal)	Connection for Aluminum Jumper	Screw Type*	Tinned Copper Jumper	Screw Type*
Magnesium (Mg) and Mg Alloys	Direct or Mg washer	Type I	Aluminum (Al) or Mg washer	Type I
Al, Al alloys, Cadmium (Cd) and Zinc (Zn).	Direct	Type I	Al washer	Type I
Steel (except stainless steel)	Direct	Type I	Direct	Type I
Tin (Sn), Lead (Pb), and Sn-Pb solders	Direct	Type I	Direct	Type I or II
Copper (Cu) and Cu alloys	Tinned or Cd plated washer	Type I or II	Direct	Type I or II
Nickel (Ni) and Ni alloys	Tinned or Cd plated washer	Type I or II	Direct	Type I or II
Stainless Steel	Tinned or Cd plated washer	Type I or II	Direct	Type I or II
Silver, Gold and precious metals	Tinned or Cd plated washer	Type I or II	Direct	Type I or II

*Screw Type - Type I, Cadmium, zinc plated or aluminum
Type II, Passivated stainless steel

3.14.9.2 Counterpoise cables. Counterpoise cables shall be attached to ground rods in accordance with the requirements of para. 3.10.6.

Information Handling Services, 1999
August 11, 1999 06:32:53

3.14.9.3 Underground metallic pipes and tanks. Underground metallic pipes and tanks shall be bonded to the earth electrode system in accordance with the requirements of para. 3.10.6.

3.14.9.4 Steel frame buildings. Structural members (columns, wall frames, and roof trusses) shall be electrically continuous. Where joints are not electrically continuous, they shall be bridged to obtain continuity, such as with a brazed or welded No. 4/0 AWG stranded copper cable.

3.14.9.5 Interior metallic pipes. Interior metallic pipes and conduits shall be bonded in accordance with para. 3.11.4.

3.14.9.6 Electrical supporting structures. Conduit and cable trays shall be bonded in accordance with para. 3.11.5.

3.14.9.7 Flat bars. Flat bars shall be bonded by high compression bolts.

3.14.10 Temporary bonds. Alligator clips and other spring loaded clamps shall be employed only as temporary bonds while performing repair work on equipment or facility wiring.

3.14.11 Inaccessible locations. All bonds which will be in concealed or inaccessible locations shall be brazed or welded.

3.14.12 Coupling of dissimilar metals. Compression bonding with bolts and clamps shall be used only between metals having acceptable coupling values as shown in Table VI. When the base metals form couples that are not allowed, the metals shall be coated, plated, or otherwise protected with a conductive finish or, a washer made of a material compatible with each shall be inserted between the two base metals. The washer shall be constructed of, or plated with an appropriate intermediate metal as determined from Table VI.

3.14.13 Surface preparation. All mating surfaces which comprise a bond shall be thoroughly cleaned before joining to remove dust, dirt, grease, oil, moisture, non-conductive protective finishes, and corrosion products.

3.14.13.1 Paint removal. Paints, primers, and other non-conductive finishes shall be removed from the metal base with appropriate chemical paint removers, or the surface shall be sanded with 500-grit abrasive paper or equivalent.

3.14.13.2 Inorganic film removal. Rust, oxides, and non-conductive surface finishes (anodized, galvanized, etc.) shall be removed by sand blasting, by using abrasive paper or cloth with 320-grit or finer, or by using an appropriate wire brush technique. Gentle and uniform pressure shall be employed when using abrasive papers or cloths or wire brushes to obtain a smooth, uniform surface. No more metal than necessary to achieve a clean surface shall be removed.

3.14.13.3 Area to be cleaned. All bonding surfaces shall be cleaned over an area that extends at least ¼ in. (6.4 mm) beyond all sides of the bonded area on the larger member.

Information Handling Services, 1999
August 11, 1999 06:32:53

3.14.13.4 Final cleaning. After initial cleaning with chemical paint removers or mechanical abrasives, the bare metal shall be wiped or brushed with an appropriate solvent meeting the requirements of P-D-680. Prior to bonding, surfaces not requiring the use of mechanical abrasives or chemical removers shall be cleaned with a dry cleaning solvent to remove grease, oil, corrosion preventives, dust, dirt, and moisture.

3.14.13.4.1 Clad metals. Clad metal shall be carefully cleaned, to a bright, shiny, smooth surface, with fine steel wool or grit so the cladding material is not penetrated by the cleaning process. The cleaned area shall be wiped with dry cleaning solvent and allowed to air dry before completing the bond.

3.14.13.4.2 Aluminum alloys. After cleaning of aluminum surfaces to a bright finish, a brush coating of alodine or other similar conductive finish shall be applied to the mating surfaces.

3.14.13.5 Completion of the bond. If an intentional protective coating is removed from the metal surface, the mating surfaces shall be joined within 4 hours after cleaning.

3.14.13.6 Refinishing of bond. Bonds shall be refinished so as to match the existing finish as close as possible within the requirements of para. 3.14.14.

3.14.14 Bond protection. All bonds shall be protected against weather, corrosive atmospheres, and mechanical damage. Under dry conditions, a corrosion preventive or sealant shall be applied within 24 hours of assembly of the bond materials. Under conditions exceeding 60% humidity, sealing of the bond shall be accomplished within 1 hour of joining.

3.14.14.1 Paint. If a paint finish is required on the final assembly, the bond shall be sealed with the recommended finish. Care shall be taken to assure that all means by which moisture or other contaminants may enter the bond are sealed. A waterproof type of paint or primer conforming to FAA-STD-012 shall be used if the recommended finish is not waterproof.

3.14.14.2 Inaccessible locations. Bonds which are located in areas not reasonably accessible for maintenance shall be sealed with permanent, waterproof compounds after assembly.

3.14.14.3 Accessible locations. If a paint finish is not required after assembly of the bond, a silicone or petroleum-based sealant shall be applied.

3.14.14.4 Compression bonds in protected areas. Compression bonds between copper conductors or between compatible aluminum alloys located in readily accessible areas not exposed to weather, corrosive fumes, or excessive dust do not require sealing, subject to Contracting Officer approval.

Information Handling Services, 1999
August 11, 1999 06:32:53

3.15 Shielding requirements

3.15.1 Design. The facility design and construction shall incorporate protective shields to attenuate radiated signals, and separation of equipment and conductors to minimize the coupling of interference.

3.15.2 Facility shielding. The shielding of facility buildings, shelters or equipment spaces shall be provided when other facility or environmental sources of radiation are of sufficient magnitude to degrade the operation and performance of electronic equipment. Unless otherwise specified, the bonding and grounding of metal structural components, building elements and the space separation of equipment and conductors shall be as indicated herein.

3.15.3 Conductor and cable shielding. Conductor and cable shielding shall comply with the following:

3.15.3.1 Signal lines and cables. Cables consisting of multiple twisted pairs shall have the individual shields isolated from each other. Cables with an overall shield shall have the shield insulated.

3.15.3.2 Termination of individual shields. Shields of pairs of conductors and the shield of cables containing unshielded conductors shall be terminated in accordance with the following:

(a) Shields shall be terminated as applicable for equipment operation.

(b) Shield terminations shall employ minimum length pigtails between the shield and the connection to the bonding halo or ferrule ring, and between the halo or ferrule ring and the shield pin on the connector. The unshielded length of a signal line shall not exceed 1 in. (25 mm) with not more than ½ in. (13 mm) of exposed length as the desired goal.

(c) Shields, individually and collectively, shall be isolated from overall shields of cable bundles and from electronic equipment cases, racks, cabinet, junction boxes, conduit, cable trays, and elements of the electronic multipoint ground system. Except for one interconnection, individual shields shall be isolated from each other. This isolation shall be maintained in junction boxes, patch panels and distribution boxes throughout the cable run. When a signal line is interrupted such as in a junction box, the shield shall be carried through. The length of unshielded conductors shall not exceed 1 in. (25 mm). To meet this requirement, the length of shield pigtail may be longer than 1 in. but shall be the minimum required.

(d) Nothing in this requirement shall preclude the extension of the shields through the connector or past the terminal strip to individual circuits or chassis if required to minimize unwanted coupling inside the electronic equipment. Where extensions of this type are necessary, overall cable or bundle shields grounded in accordance with para. 3.15.3.3 shall be provided.

Information Handling Services, 1999
August 11, 1999 06:32:53

3.15.3.3 Termination of overall shields. Cables that have an overall shield over individually shielded pairs shall have the overall shield grounded at each end and at intermediate points in accordance with the following.

(a) Cable shields terminated to connectors shall be bonded to the connector shell as shown in Figure 6, Grounding of Overall Cable Shields to Connectors and Penetrated Walls, a), Box Connector, or b), Grounding of Multi-Pin Connector. The shield shall be carefully cleaned to remove dirt, moisture, and corrosion products. The connector securing clamp shall be carefully tightened to assure that a low resistance bond to the connector shell is achieved completely around the circumference of the cable shield. The bond shall be protected against corrosion in accordance with para. 3.14.14.

(b) Where the cable continuity is interrupted such as in a junction box, the shield shall be carried through and grounded at the box. The length of unshielded conductors shall not exceed 1 in. (25 mm). To meet this requirement the length of shield pigtail may be longer than 1 in., if necessary, to reach ground but shall be kept to a minimum.

(c) Cables which penetrate walls or panels of cases or enclosures without the use of connectors shall have their shields bonded to the penetrated surface in the manner shown in Figure 6 c), Partition Penetration. Overall shields shall be terminated to the outer surface of cases to the maximum extent possible.

(d) Grounding of overall shields to terminal strips shall be as shown in Figure 7, Grounding Overall Shield to Terminal Strip.

3.15.4 Space separation. The design and layout of facilities shall physically separate electronic equipment and conductors which produce interference from equipment and conductors that are susceptible to interference. In general, electronic equipment and conductors which carry, produce or use high levels of current (greater than 100 ma) or voltage (12V or more), including pulse power, can produce interference. Electronic equipment and conductors which carry, produce or receive low voltage or power levels are susceptible to interference.

3.16 Control of static electricity

3.16.1 General. Modern electronic equipment with high speed and miniaturized circuitry is highly susceptible to damage by electrostatic discharge (ESD). The requirements of this paragraph are designed to minimize this occurrence and shall be used in addition to NFPA 77.

3.16.2 Controlled areas. Operation, storage, repair and maintenance spaces used for circuits and electronic equipment subject to damage by static electricity shall be designated as ESD controlled areas.

Information Handling Services, 1999
August 11, 1999 06:32:53

3.16.3 Humidity control. The relative humidity in ESD controlled areas shall be maintained in the 40-60% range as feasible for new construction and renovated spaces. Humidification must be analyzed in conjunction with heating and cooling requirements since it is affected by these characteristics. Outside walls, roof ceilings, and grade level floors shall have continuous plastic, aluminum foil or sheet metal incorporated in their construction to limit moisture migration. Foil or sheet metal is preferred for walls and ceilings because of their shielding and ground plane properties. Where plastics are used, they shall be of a type which dissipates electric charge. The effect of joints shall be minimized by overlapping plastic and metal sheet materials, by interlocking and conductive caulking sheet metal or panel joints, and by metallic tape for aluminum foil backed materials. Where shielding is required, it shall be incorporated as required in para. 3.15 through 3.15.5.

3.16.4 Work surfaces. Test, repair and maintenance stations and other work surfaces and their associated standing space shall be covered with a conducting material designed to protect components and assemblies from ESD. A small ground plate, connected to the electronic multipoint ground system, shall also be provided for the positive discharge of personnel, tools and test leads prior to direct contact with components and assemblies.

3.16.5 Tools and accessories. All tools and work bench accessories shall be selected to minimize discharge and damage to components and assemblies.

3.16.6 Furniture and upholstery. All upholstery and chair covering material in controlled spaces shall have a low propensity to store static electricity. Chairs and upholstered furniture shall have metal frames. Stationary feet shall be conductive (uninsulated). Casters and rollers on chairs and movable furniture shall be steel, conductive rubber or conductive plastic.

3.16.7 Floors. Floors of all rooms containing electronic equipment shall have a static dissipating surface and shall be connected to the electronic multipoint ground system. This may be raised flooring, carpet or linoleum type material and shall be of such design as to ensure electrical continuity. Where raised floors use acoustical isolation strips under the removable floor tiles, the strips shall be made of conductive rubber or plastic. In addition metal grounding clips shall be provided at each stanchion or pedestal to assure that charges are drained. Materials used for static dissipating surfaces shall meet the requirements of UL 779 (also listed as ANSI-A148.1).

3.16.8 Ion generation. High-voltage ionization generators may be used in small spaces when cost effective in comparison with other static electricity control measures. These shall be of a type which produces both positive and negative ions.

4. QUALITY ASSURANCE PROVISIONS

4.1 Test Plan. Contractors shall develop a test plan in accordance with MIL-HDBK-237 to demonstrate compliance with the requirements of this standard where applicable.

Information Handling Services, 1999
August 11, 1999 06:32:53

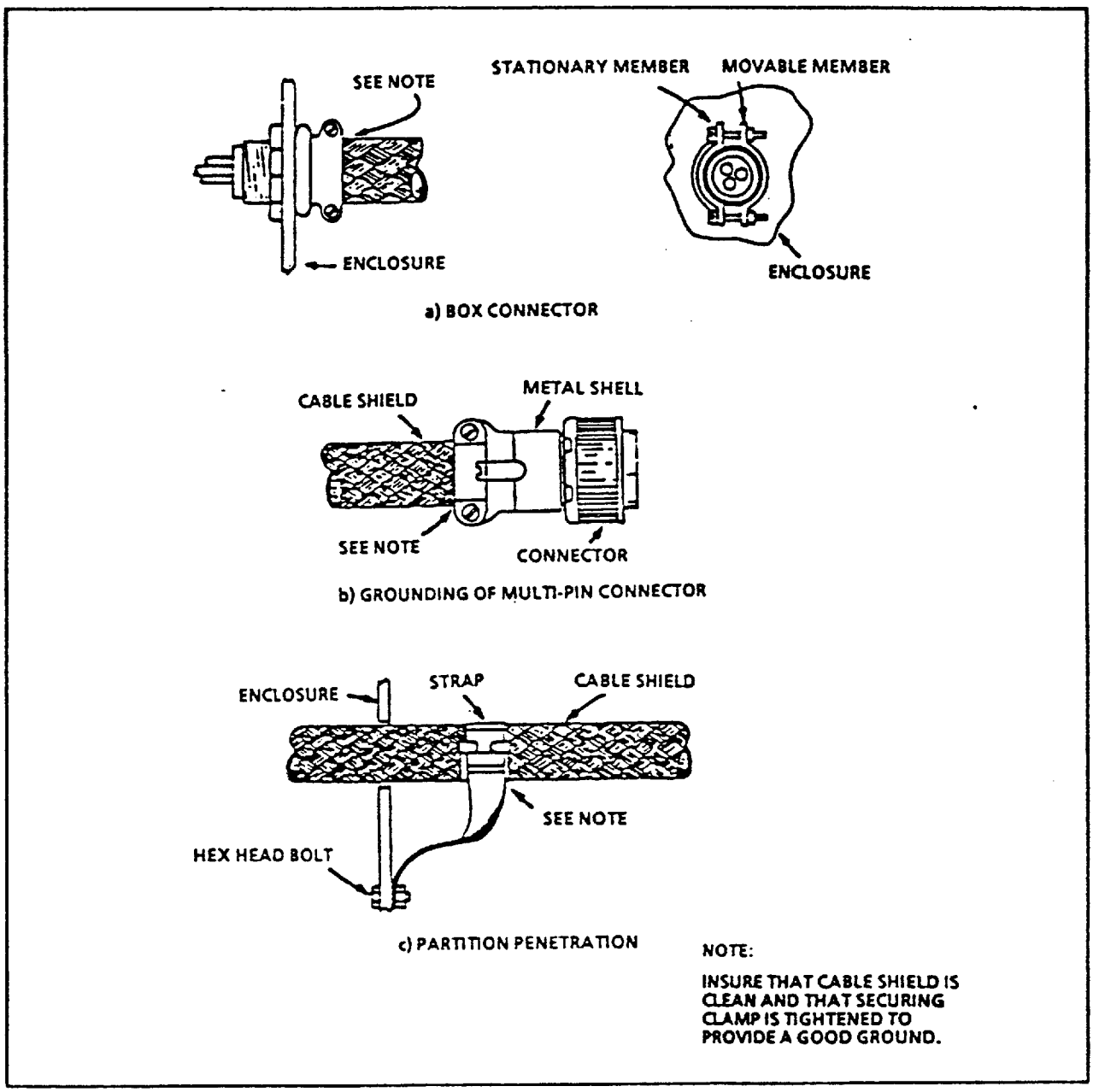

Figure 6. Grounding of Overall Cable Shields to Connectors and Penetrated Walls.

4.2 Approval. Test plans shall be submitted for Contracting Officer approval.

5. PREPARATION FOR DELIVERY. Section is not applicable to this standard.

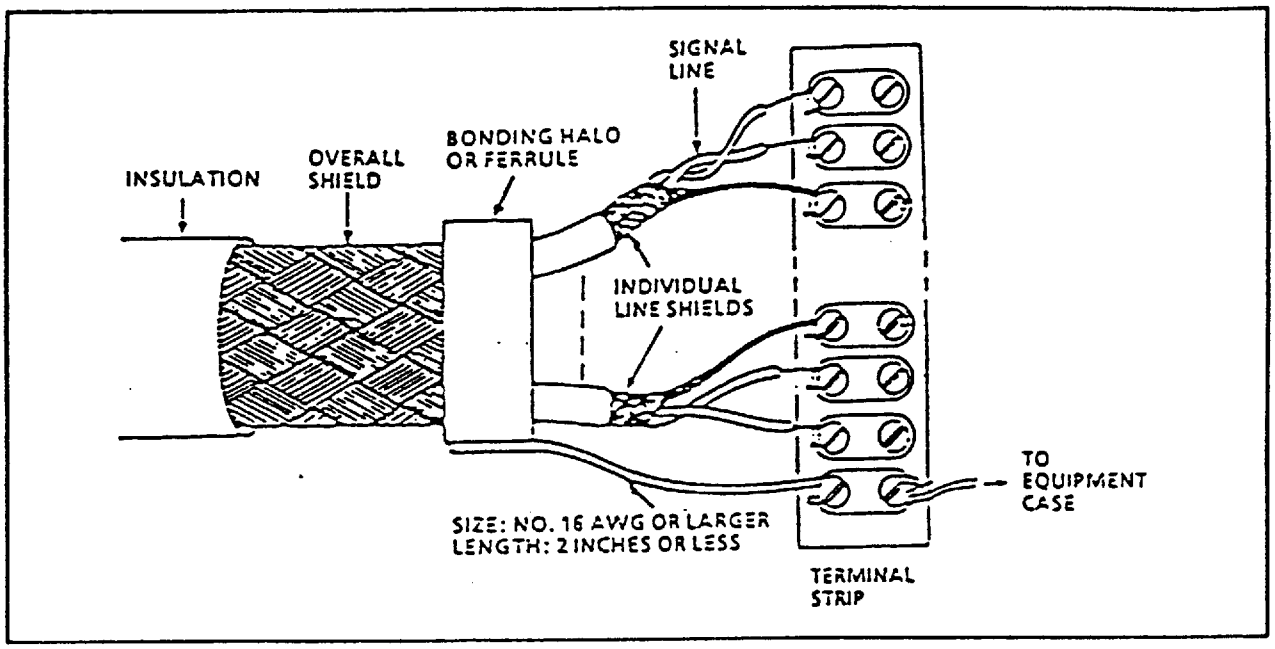

Figure 7. Grounding Overall Shield to Terminal Strip

6. NOTES

6.1 Definitions

6.1.1 Access well. A small covered opening in the earth using concrete, clay pipe or other wall material to provide access to an earth electrode system connection.

6.1.2 Air terminal. A metallic rod mounted on a building or structure specifically designed to intercept lightning strikes.

6.1.3 Arrester. Components, devices or circuits used to attenuate, suppress or divert excess electrical (surge and transient) energy to ground. The terms arrester, suppressor and protector are used interchangeably except that the term arrester is used herein for components, devices and circuits at the service disconnecting means.

6.1.4 Bond. The electrical connection between two metallic surfaces used to provide a low resistance path between them.

6.1.5 Bond, direct. An electrical connection utilizing continuous metal-to-metal contact between the members being joined.

6.1.6 Bond, indirect. An electrical connection employing an intermediate electrical conductor between the bonded members.

6.1.7 Bonding. The joining of metallic parts to form an electrically conductive path to assure electrical continuity and the capacity to conduct current imposed between the metallic parts.

6.1.8 Bonding jumper. A conductor to assure electrical conductivity between metal parts required to be electrically connected.

6.1.9 Branch circuit. The circuit conductors between the final overcurrent device protecting the circuit and the outlet(s).

6.1.10 Brazing. A joining process using a filler metal with working temperature above 800°F but below the melting point of the base metal(s).

6.1.11 Building. The fixed or transportable structure which provides environmental protection.

6.1.12 Cabinet. A protective housing or covering for two or more units or pieces of equipment. A cabinet may consist of an enclosed rack with hinged doors.

6.1.13 Case. A protective housing for a unit or piece of electrical or electronic equipment.

6.1.14 Chassis. The metal structure that supports the electrical or electronic components which make up the unit or system.

6.1.15 Clamp voltage. The voltage that appears across transient suppressor terminals when the suppressor is conducting transient current.

6.1.16 Conductor. Bare or insulated, see below.

6.1.16.1 Conductor, bare. A conductor having no covering or electrical insulation.

6.1.16.2 Conductor, insulated. A conductor encased within material of composition and thickness recognized by the NEC as electrical insulation.

6.1.16.3 Conductor, lightning bonding (secondary). A conductor used to bond a metal object, within the zone of protection and subject to potential build-up different from the lightning current, to the lightning protection system.

6.1.16.4 Conductor, lightning down. The down conductor that serves as the path to the earth grounding system from the roof system of air terminals and roof conductors or from an overhead ground wire.

6.1.16.5 Conductor, lightning main. The main conductors are the conductors of the lightning protection system. These can be the roof conductors interconnecting the air terminals on the roof, the conductor to connect a metal object on or above roof level that is subject to a direct lightning strike to the lightning protection system, or the down conductor.

Information Handling Services, 1999
August 11, 1999 06:32:53

6.1.16.6 Conductor, lightning roof. Roof conductors interconnecting all air terminals to form a two-way path to ground from the base of each air terminal.

6.1.17 Crowbar. Crowbar is a method of shorting a surge current to ground in surge protection devices. This method provides protection against more massive surges than other types, but lowers the clamping voltage below the operational voltage of the electronic equipment causing noise and operational problems. It also permits a follow current which can cause damage.

6.1.18 Earth electrode system (grounding electrode system). A network of electrically interconnected rods, plates, mats, piping, incidental electrodes (metallic tanks, etc.) or grids installed below grade to establish a low resistance contact with earth.

6.1.19 Electromagnetic interference. Any emitted, radiated, conducted or induced voltage which degrades, obstructs, or interrupts the desired performance of electronic equipment.

6.1.20 Electronic multipoint ground system. An electrically continuous network consisting of interconnected ground plates, equipment racks, cabinets, conduit, junction boxes, raceways, duct work, pipes and other normally non-current-carrying metal elements for electronic signals. It includes conductors, jumpers and straps that connect individual electronic equipment components to the electronic multipoint ground system.

6.1.21 Electronic single point ground system. A single point ground system provides a single point reference in the facility for electronic signals. The single point ground system shall be installed in a trunk and branch arrangement to prevent conductive loops in the system. It shall be isolated from all other ground systems except for an interconnection, where applicable, to the multipoint ground system at the main ground plate. The single point ground system consists of insulated conductors, copper ground plates mounted on insulated stands, and insulated ground plates, buses, and/or signal ground terminals in the electronic equipment which are isolated from the frame of the equipment.

6.1.22 Equipment grounding conductor. The conductor used to connect non-current-carrying metal parts of equipment, raceways, or other enclosures to the system grounded conductor and/or grounding electrode conductor at the service entrance or at the source of a separately derived system.

6.1.23 Equipment, unit or piece of. An item having a complete function apart from being a component of a system.

6.1.24 Feeder. All circuit conductors between the service equipment or the source of a separately derived system and the final branch circuit overcurrent device.

6.1.25 Facility ground system. Consists of the complete ground system at a facility including the earth electrode system, electronic multipoint ground

Information Handling Services, 1999
August 11, 1999 06:32:53

system, electronic single point ground system, equipment grounding conductors, grounding electrode conductor(s), and lightning protection system.

6.1.26 Fitting, high compression. See "Pressure Connector."

6.1.27 Ground. A conducting connection, whether intentional or accidental, between an electrical circuit or equipment and the earth, or to some conducting body that serves in place of the earth.

6.1.28 Grounded. Connected to earth or to some conducting body that serves in place of the earth.

6.1.29 Grounded conductor. A system or circuit conductor that is intentionally grounded at the service disconnecting means and at the transformer serving the facility. This grounded conductor is the neutral conductor for the power system.

6.1.30 Grounded, effectively. Permanently connected to earth through a ground connection of sufficiently low impedance and having sufficient current carrying capacity that ground fault current which may occur cannot cause a voltage build up dangerous to personnel.

6.1.31 Grounding conductor. A conductor used to connect equipment or the grounded circuit of a wiring system to a reference ground system.

6.1.32 Grounding electrode. Copper rod, plate or wire embedded in the ground for the specific purpose of dissipating electric energy to the earth.

6.1.33 Grounding electrode conductor. The conductor used to connect the grounding electrode to the equipment grounding conductor and/or to the grounded (neutral) conductor of the facility at the service disconnecting means or at the source of a separately derived system.

6.1.34 High frequency. All electrical signals at frequencies greater than 100 kilohertz (Khz). Pulse and digital signals with rise and fall times of less than 10 microseconds are classified as high frequency signals.

6.1.35 Landline. Any conductor, line or cable installed externally above or below grade to interconnect electronic equipment in different facility structures or to connect externally mounted electronic equipment.

6.1.36 Line replaceable unit. Hardware elements whose design enables removal, replacement and checkout by organizational maintenance.

6.1.37 Low frequency. Includes all voltages and currents, whether signals, control, or power, from DC through 100 Khz. Pulse and digital signals with rise times of 10 μs or greater are considered low frequency signals.

6.1.38 Overshoot voltage. The fast rising voltage that appears across transient suppressor terminals before the suppressor turns on (conducts current) and clamps the input voltage to a specified level.

Information Handling Services, 1999
August 11, 1999 06:32:53

6.1.39 Pressure connector. For purpose of this document, "FAA approved pressure connectors" shall be those which use hydraulic crimpers or an explosive charge to effect closure.

6.1.40 Rack. A frame in which one or more equipment units are mounted.

6.1.41 Reference plane or point, electronic signal. The conductive terminal, wire, bus, plane, or network which serves as the ground reference for all signals referenced thereto.

6.1.42 Reverse standoff voltage. The maximum voltage that can be applied across transient suppressor terminals with the transient suppressor remaining in a non-conducting state.

6.1.43 Shield. A housing, screen, or cover which substantially reduces the coupling of electric and magnetic fields into or out of circuits or prevents accidental contact of objects or persons with parts or components operating at hazardous voltage levels.

6.1.44 Structure. Any fixed or transportable building, shelter, tower, or mast that is intended to house electrical or electronic equipment or otherwise support or function as an integral element of the air traffic control system.

6.1.45 Transient suppressor. Component(s), device(s) or circuit designed to attenuate, suppress or divert conducted transient(s) and surge energy to ground to protect electronic equipment.

6.1.46 Turnon voltage. The voltage required across a transient suppressor terminal to cause the suppressor to conduct current.

6.2 Acronyms and abbreviations. The following are acronyms and abbreviations used in this standard.

A - amperes
AC - alternating current
AWG - American wire gauge
cm - centimeter(s)
cmil - circular mils
DC - direct current
e.g. - for example
ESD - electrostatic discharge
et. al. - and others
FAA - Federal Aviation Administration
ft. - foot (feet)
Hz - hertz
i.e. - that is
in. - inch(es)
KA - kiloampere
Kg - kilogram
Khz - kilohertz
LRU - line replaceable unit
m - meter
ma - milliamperes
MCM - thousand circular mils
Mhz - megahertz
mm - millimeter(s)
NEC - National Electric Code
NEMA - National Electrical Manufacturers Association
NFPA - National Fire Protection Association
para. - paragraph
PVC - polyvinyl chloride
RF - radio frequency
SAS - silicon avalanche diode suppressors
UL - Underwriters' Laboratories
μs - microseconds
V - volts

Information Handling Services, 1999
August 11, 1999 06:32:53