9003329 0007929 23T

FAA-STD-021a
March 6, 1990
(includes Change 1)

U.S. Department
of Transportation
Federal Aviation
Administration

DOCUMENTATION CONTROL CENTER

U.S. Department of Transportation

Federal Aviation Administration

Standard

CONFIGURATION MANAGEMENT

(Contractor Requirements)

Information Handling Services, 1999
August 11, 1999 06:36:18

DOCUMENT CHANGE NOTICE

1. Originator Name and Address SEIC Washington, DC	2. [ ] Proposed [X] Approved	3. Code Identification N/A	4. Standard No. FAA-STD-021a
		5. Code Identification N/A	6. DCN No. 1

7. System Designation NAS	8. Related ECR/NCP No. see #14	9. Contract No. DTFA01-84-C-00017	10. Contractual Activity N/A

11. Configuration Item Nomenclature Configuration Management (Contractor Requirements), FAA-STD-021	12. Effectivity N/A

This notice informs recipients that the standard identified by the number (and revision letter) shown in block 4 has been changed. The pages changed by this DCN (being those furnished herewith) carry the same date as the DCN. The page numbers and dates listed below in the summary of changed pages, combined with nonlisted pages of the original issue of the revision shown in block 4, constitute the current version of this specification.

13. DCN No.	14. Pages changed	S*	A/D*	15. Date
1	This change notice incorporates the following NCPs: 11290, 12323.			
	NCP 11290, *FAA-STD-026, NAS Software Development*, was approved on March 31, 1989 and affects the following pages: 2, 3, 8, 10, 11, 14, 21, 58, 59, 95, 98, 101, and 106.			03/31/89
	NCP 12323, *Federal Aviation Administration, Standard, Configuration Management (Contractor Requirements); FAA-STD-021a, Change 1*, was approved on March 6, 1990 and affects the following pages: 1, 2, 3, 10, 12, 13, 20, 43-45, 48, 51, 52, 55, 57, 59, 60, 96, and 98.			03/06/90
	Please replace the following pages with the attached.			
	v-viii	S		
	1-4	S		
	7-14	S		
	19-22	S		
	43-48	S		
	51, 52	S		
	55-64	S		
	95-98	S		
	101, 102,	S		
	105, 106	S		
	NOTE: All change pages carry the date of the DCN (March 6, 1990), although some pages were changed only by NCP 11290, approved on March 31, 1989.			

*S = Indicates Supercedes Earlier Pages *A = Indicates Added Page * D = Indicates Deleted Page

Information Handling Services, 1999
August 11, 1999 06:36:18

FOREWORD

It is the Policy of the Federal Aviation Administration that all resources and services required to operate and maintain the NAS be acquired in an effective and economical manner in order to minimize the aggregate life-cycle cost of the NAS. This standard has been prepared to provide general requirements for a contractor configuration-management program to control the required functional and physical configurations of procured products. The standard is to be tailored to specific programs and implemented by the contract statement of work.

Information Handling Services, 1999
August 11, 1999 06:36:18

9003329 0007932 824

(THIS PAGE INTENTIONALLY LEFT BLANK)

Information Handling Services, 1999
August 11, 1999 06:36:18

CONTENTS

Paragraph	Title	Page
1.	SCOPE	1
1.1	Scope.	1
1.2	Purpose.	1
1.3	Application.	1
1.4	Definitions.	1
2.	APPLICABLE DOCUMENTS.	3
2.1	Government documents.	3
2.2	Precedence.	4
3.	GENERAL REQUIREMENTS.	5
3.1	Introduction.	5
3.2	Configuration management plan.	5
3.3	Configuration management elements.	5
4.	DETAILED REQUIREMENTS.	7
4.1	Baseline management.	7
4.2	System engineering and interface control.	7
4.2.1	System engineering.	7
4.2.2	Interface control.	7
4.3	Configuration identification.	8
4.3.1	Functional Configuration Identification (FCI).	8
4.3.2	Allocated Configuration Identification (ACI).	8
4.3.3	Design Configuration Identification (DCI).	9
4.3.4	Product Configuration Identification (PCI).	9
4.3.4.1	Repairable CIs.	9
4.3.4.2	Nonrepairable CIs.	9
4.3.4.3	Privately developed CIs.	9
4.3.5	Precedence.	10
4.3.6	Addendum to configuration identification.	10
4.3.7	Inventory item identification.	10
4.3.8	Specification authentication.	10
4.3.9	Computer Software Configuration Identification.	10
4.3.9.1	Requirements specifications.	10
4.3.9.2	Design documents and listings.	10
4.3.9.3	Product specification.	11
4.4	Configuration item identification.	11
4.5	Engineering release requirements.	11

Information Handling Services, 1999
August 11, 1999 06:36:18

CONTENTS (cont)

Paragraph	Title	Page
4.6	Engineering change proposals, deviations, and waivers.	11
4.6.1	Functional, allocated, design or product baseline documentation changes.	11
4.6.2	Engineering change proposal (ECP) processing.	13
4.6.3	Engineering change proposal (ECP) classification.	13
4.6.4	Privately developed item.	13
4.6.5	Commercial off-the-shelf equipment (COTS).	13
4.6.5.1	Technical manuals.	13
4.6.5.2	Proprietary information.	13
4.6.5.3	Maintenance level.	14
4.6.6	Deviations.	14
4.6.7	Waivers.	14
4.7	Reporting the accomplishment of updating/retrofit changes.	14
4.8	Specification maintenance.	14
4.9	System allocation document.	14
4.10	Configuration audits.	15
4.10.1	Functional Configuration Audit.	15
4.10.2	Physical Configuration Audit.	15
4.10.3	Relationship of audits to other reviews.	16
4.11	Configuration management records, reports, and data.	16
4.11.1	Data requirements.	17
4.11.2	Electronic data.	17
4.12	Quality assurance provisions/qualification requirements.	17
10.	Appendix I Configuration Management Plan	19
20.	Appendix II Interface Control	25
30.	Appendix III Criteria for Selecting Configuration Items	31
40.	Appendix IV Addendum to Configuration Item Specification	37
50.	Appendix V Inventory Item Specification	41
60.	Appendix VI Document and Item Identification, Numbering and Marking	43
70.	Appendix VII Engineering Release Records and Correlation of Manufactured Products	47

Information Handling Services, 1999
August 11, 1999 06:36:18

CONTENTS (cont)

Paragraph	Title	Page
80.	Appendix VIII Engineering Changes (Equipment)	51
90.	Appendix IX Engineering Changes (Computer Software)	57
100.	Appendix X Reporting the Accomplishment of Updating/Retrofit Changes	63
110.	Appendix XI Specification Change/Maintenance	67
120.	Appendix XII Specification and Support Documentation Maintenance, Computer Software	75
130.	Appendix XIII System Allocation Document	89
140.	Appendix XIV Definitions	95
150.	Appendix XV Cm in the Nas Life Cycle	105

Figure	Title	Page
1	NAS Subsystem and Representative Key CM Events	2
2	Baseline Change Process	12
3	Verification Requirements Traceability Matrix (Sample)	18
4	Interface Control Documents	26
5	Matrix of Interface Control Responsibilities	29
6	Example of ICWG Control Sheet	30
7	Cover Page - Addendum Specification	39
8	Flow Chart for Engineering Change Proposal, Deviations and Waivers	56
9	(Sample Form) Installation Completion Notice	64
10	Specification Change Notice	68
11	Sample Configuration Item Development Record - Part 1	71
12	Sample Configuration Item Development Record - Part 2	73
13	Example of Entries on SCN (CSCI Specification)	79
14	Computer Software Configuration Index	81
15	Configuration Item Development Record - Section A (CSCI)	83
16	Configuration Index: Sample Section I - CSCI Requirements Specification	85
17	Change Status Report, Computer Software	87
18	Sample A, System Allocation Document	90

Information Handling Services, 1999
August 11, 1999 06:36:18

CONTENTS (concl)

Figure	Title	Page
19	Sample B, Typical System Allocation Document - Part 1	91
20.	Sample C, Typical System Allocation Document - Part 2	92
21.	NAS Life-Cycle Model	107

Information Handling Services, 1999
August 11, 1999 06:36:18

1. SCOPE

1.1 Scope. This standard establishes the general requirements and implementing practices for a contractor's configuration management program.

1.2 Purpose. The purpose of this standard is to establish uniform contractor configuration management practices and procedures that can be tailored to all systems and configuration items procured by the Federal Aviation Administration (FAA).

1.3 Application. Configuration management (CM) requirements established by this standard will be initiated at the beginning of the life cycle of a project and continue through all three life cycle phases; requirements determination, acquisition, and operational support. Figure 1 depicts the NAS subsystem and representative key CM events. Appendix XIV defines the events. Contracts invoking this standard will specifically identify in the contract work statement the applicable paragraphs and appendixes or portions thereof depending upon the scope of the program and the complexity of the item being procured. The contractor shall impose the applicable requirements contained herein upon subcontractors, vendors, and suppliers when they are responsible for an item identified by the FAA as a configuration item (CI) as defined in paragraph 140.13.

1.4 Definitions. For definitions used in this standard and not-referenced in Appendix XIV refer to MIL-STD-480, Paragraph 3.

Information Handling Services, 1999
August 11, 1999 06:36:18

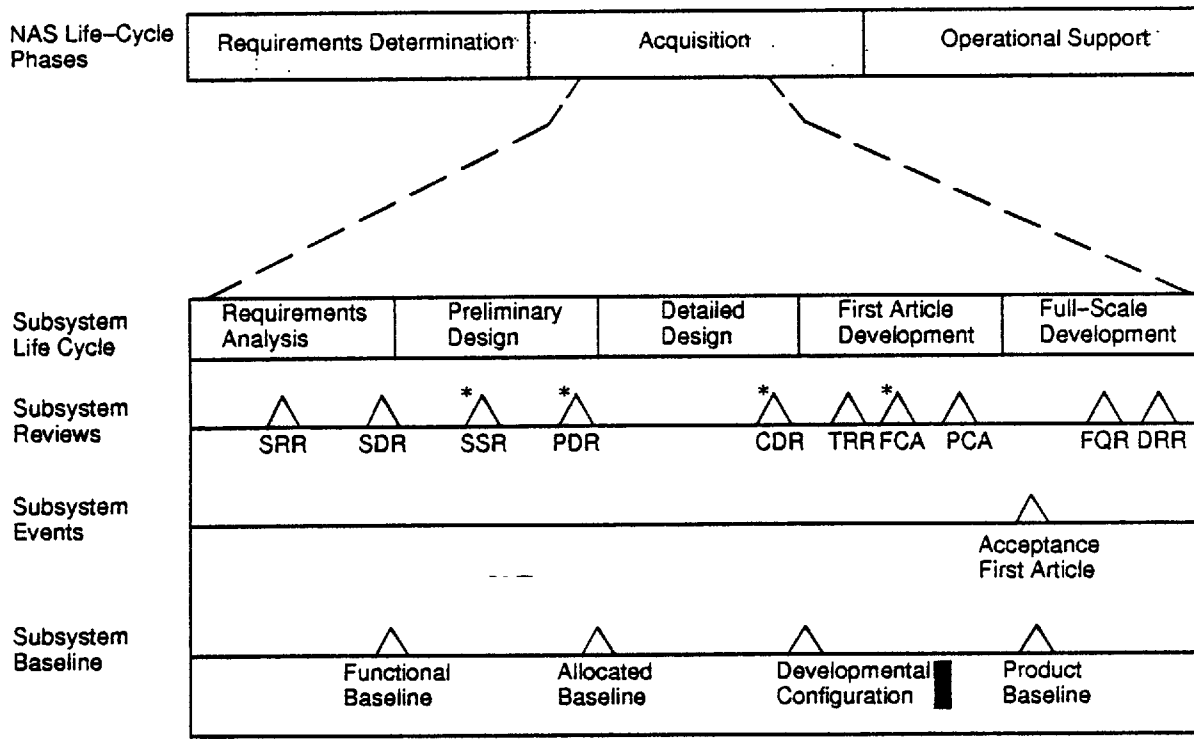

Legend:
SRR- Subsystem Requirements Review
SDR- Subsystem Design Review
SSR- Software Specification Review
PDR- Preliminary Design Review
CDR- Critical Design Review
TRR- Test Readiness Review
FCA- Functional Configuration Audit
PCA- Physical Configuration Audit
FQR- Formal Qualification Review
DRR- Deployment Readiness Review

* Can Be Incremental Reviews

Figure 1. NAS Subsystem and Representative Key CM Events

GM1599

Information Handling Services, 1999
August 11, 1999 06:36:18

2. APPLICABLE DOCUMENTS

2.1 Government documents. The following documents, of the issue in effect on date of invitation for bids or request for proposal, form a part of this standard and are applicable to the extent specified herein.

SPECIFICATIONS

FAA

FAA-G-2100	Electronic Equipment, General Requirements

STANDARDS

FAA

FAA-STD-002	Facilities Engineering Drawing Preparation
FAA-STD-005	Preparation of Specification Documents
FAA-STD-013	Quality Control Program Requirements
FAA-STD-016	Quality Control System Requirements
FAA-STD-018	Computer Software Quality Program Requirements
FAA-STD-025	Preparation of Interface Control Documentation
FAA-STD-026	NAS Software Development

Military

DOD-D-1000	Drawings, Engineering and Associated Lists
DOD-STD-100	Engineering Drawing Practices
MIL-STD-480	Configuration Control - Engineering Changes, Deviations and Waivers
MIL-STD-482	Configuration Status Accounting
MIL-STD-499	Engineering Management
MIL-STD-1521	Technical Reviews and Audits for Systems, Equipments, and Computer Software

OTHER PUBLICATIONS

FAA Order 1320.33	Equipment Modification and Facility Instruction
Handbook H4/H8	Federal Supply Code for United States and Canadian Manufacturers, Name to Code

Information Handling Services, 1999
August 11, 1999 06:36:18

9003329 0007940 9T0

Copies of specifications, standards, drawings, and publications required by suppliers in connection with specified procurement functions should be obtained as directed by the Contracting Officer.

2.2 Precedence. When conflicts exist between the requirements of the contract and this standard, the contract shall take precedence. Where the requirements of non-FAA documents conflict with the requirements specified herein or in any other applicable FAA documents, requirements of this standard and the other FAA documents shall apply. The contractor shall notify the Contracting Officer of each instance of conflict of or apparent conflict of requirements.

Information Handling Services, 1999
August 11, 1999 06:36:18

3. GENERAL REQUIREMENTS.

3.1 Introduction. Configuration management is a discipline applying technical and administrative direction and surveillance to identify and document the functional and physical characteristics of a Federal Aviation Administration hardware or software configuration item that satisfies an end use function, to control changes to those characteristics, and to record and report change processing and implementation status. It is used to establish and maintain a formal set of procedures by which a uniform system of change identification, coordination, approval, status accounting, and audits is accomplished. It applies to the development, acquisition, implementation, modification, operation, and training of specific systems, subsystems, facilities, equipment, computer software, and documentation (specifications, plans, drawings, manuals, etc.). Appendix XV explains CM in the NAS life cycle.

3.2 Configuration management plan. The contractor shall establish within his organization, responsibility for implementing the requirements of configuration management invoked by the contract. The responsibilities and procedures shall be documented in a configuration management plan which is subject to approval by the procuring activity. For Hardware Configuration Items (HWCIs) and Computer Software Configuration Items (CSCIs) the plan shall be in accordance with the requirements set forth in Appendix I. The intended approach and an outline of the controls to be implemented will be required as a part of the contractor's proposal in response to, the Request for Technical Proposal (RFTP) or a fully described configuration management plan submitted to the Federal Aviation Administration for review and approval within a specified time after contract award.

3.3 Configuration management elements. The major elements of configuration management are:

(a) Baseline establishment and maintenance

(b) System engineering and interface control

(c) Configuration identification

(d) Engineering release requirements

(e) Engineering change criteria and change control procedures

(f) Specification and interface control documentation maintenance

(g) Configuration audits, design reviews and verification records

(h) Records, reports and status accounting data.

Information Handling Services, 1999
August 11, 1999 06:36:18

9003329 0007942 773

(THIS PAGE INTENTIONALLY LEFT BLANK)

Information Handling Services, 1999
August 11, 1999 06:36:18

4. DETAILED REQUIREMENTS

4.1 Baseline management. A baseline is the documentation or listing of configuration items at the time when the documentation represents a meaningful statement of the performance requirements and is subject to configuration management. Baselines must be established anytime in a program when a formal departure point must be defined for control of future changes in performance and design. There are normally three program baselines; functional, allocated, and product. Equipment management may employ all three baselines or employ only the functional and product baselines depending upon program complexity and requirements. Computer software management normally employs a design baseline in addition to the previously named three baselines. The baselines shall be documented by approved configuration identifications which are the basis for control. All descriptions of baselines (functional, allocated, design, and product) of a system, or other configuration items, used as common reference by industry and the Government must be contained in specifications. However, description of the contractor's internally controlled development configuration of a CSCI, used to describe the evolving configuration of 'the-software design during software development are contained in design documents (not specifications) and software listings. FAA-STD-005 establishes criteria for a uniform specification program for all contractor-prepared documents.

4.2 System engineering and interface control. Two closely related tasks which must be accomplished in the design and development of configuration items, and in the development of the specification requirements ' for the configuration items, are system engineering and interface control.

4.2.1 System engineering. System engineering responsibility for the total system or a functional area is normally vested in a single contractor or procuring activity. System engineering, as it relates to configuration management, is the application of scientific and engineering efforts to transform an operational need into a description of system performance parameters. A system configuration must ultimately be called out in the product specifications. In this way, the system engineering agency or contractor generates requirements for configurations which will satisfy the operational need, constrained technically only by the content of the product specification. The system engineering agency or contractor is responsible for assessing the impact of changes to the product specification. This includes modifications to operational systems. (See FAA Order 1320.33 and MIL-STD-499.)

4.2.2 Interface control. Interface control is the coordinated activity required to assure that the functional and physical characteristics of systems and equipments are compatible. The interface

Information Handling Services, 1999
August 11, 1999 06:36:18

control officer/contractor is a coordinator with responsibility to assure that configuration item identification conforms to the functional interfaces established by system engineering, and that the configuration items, including computer software as finally designed, are physically and logically compatible, will assemble together, and can be operated and maintained as intended. The interface control officer or contractor is responsible for control of space allocation where necessary to assure that equipment under configuration control can be installed in a facility or existing system, and is responsible for management control of interface control drawings. The interface control contractor shall be responsible for the preparation of interface control documentation, including installation control drawings. The interface control contractor shall assess the impact of changes which affect interfaces. Appendix II shall be used to establish the requirements for interface control of a system with other systems, and between configuration items within a system; including computer software, when configuration items are being procured from several contractors.

4.3 Configuration identification. Selection of configuration items (CIs) shall be in accordance with the guidance contained in Appendix III. For every CI, configuration identification shall be established in the form of technical documentation. Initially, functional configuration identification is used to establish performance-oriented requirements for the design and development of the higher level CIs. These requirements may be translated into allocated configuration identification for selected CIs that are part of a higher level CI. Identification of developmental CSCIs is used to describe each CSCI's design documentation and software listings as the CSCI is undergoing development. (These documents and listings become the product configuration identification for software.) Finally, for developed CIs (Government or private), product configuration identification shall be used to prescribe "build-to" or form, fit, and function requirements, and acceptance test appropriate to these requirements.

4.3.1 Functional Configuration Identification (FCI). FCI is required for all systems and all CIs specified in the contract which are allocated from a system requirement, except privately developed items. Whenever possible, the initial FCI (i.e., the functional baseline or changed functional baseline of a system required to be modified) will be established concurrently with approval to initiate engineering or operational systems development. The establishment of the functional baseline will occur no later than System Design Review (SDR). The FCI shall be documented by a Type A specification prepared in accordance with FAA-STD-005.

4.3.2 Allocated Configuration Identification (ACI). ACI shall be used to govern the development of selected CIs that are allocated from system requirements or are part of a higher level CI, including those that will become a part through modification of a higher level CI. The allocated baseline will be formally established with the award of engineering or operational systems development contract(s) whenever possible. For CIs, the timing of the establishment of the allocated baseline will be as agreed between the contractor and the procuring activity, but not later than Critical Design Review (CDR). For CSCIs, the allocated baseline may be established upon completion of the Software Specification Review (SSR). The ACI shall be documented by Type B specifications, Software and Interface Requirements Specifications, and other documents prepared in accordance with FAA-STD-005.

Information Handling Services, 1999
August 11, 1999 06:36:18

4.3.3 Design Configuration Identification (DCI). The DCI shall be applied to software development programs. It consists principally of the Software Requirements Specification and Interface Requirements Specification updated after critical design review (CDR). These specifications will be retained under configuration control throughout the life cycle of the product, thus, permitting controlled development of test plans and procedures, training, and manuals.

4.3.4 Product Configuration Identification (PCI). PCI shall be used to prescribe necessary "build-to", or form, fit, and function requirements and the acceptance tests for those requirements. The kind and level of detail to be contained in the PCI shall be determined in consideration of requirements for the anticipated method of reprocurement and for logistic support of potentially repairable items which are part of a CI. The contractor shall establish and implement a developmental configuration for each CSCI to maintain configuration management during the full scale development phase or software development. Computer software and software design documentation shall be developed, reviewed, and ' entered into the contractor's design baseline. After the software and documentation for the CSCI are approved at the functional and physical configuration audits, the contractor's design baseline shall become part of the procuring activity's product baseline. In addition to other contractual requirements such as DOD-STD-100 and FAA-STD-005, documentation for the PCI shall be prepared in accordance with the following:

4.3.4.1 Repairable CIs. On repairable CIs developed at Government expense, as identified and required by the procuring activity, design disclosure documentation to the level of nonrepairability shall be developed. On those repairable items tested by automatic or semiautomatic test equipment, the maintenance of the configuration of the item will be at the lowest level tested automatically or semi-automatically. The maintenance documentation shall consist of product specifications, drawings, and associated lists, including the detail design of all interfaces.

4.3.4.2 Nonrepairable CIs. On nonrepairable CIs developed at Government expense, form, fit, and function documentation shall be used. This documentation describes the physical and functional characteristics of the item as an entity, but does not describe characteristics of the elements that make up the item. For those nonrepairable items that are also expendable, the PCI may consist of a detail design specification (as in the case of clothing and subsistence), or of a detail design specification incorporating performance requirements and certain drawings, where interchangeability or other functional considerations prevail.

4.3.4.3 Privately developed CIs. On privately developed CIs (repairable and nonrepairable), form, fit, and function documentation (equivalent to function type specification per FAA-STD-005) shall be used. On all configuration items planned for test on automatic or semiautomatic test equipment, the criteria for configuration identification shall be form, fit, function, and testability.

Information Handling Services, 1999
August 11, 1999 06:36:18

4.3.5 Precedence. Functional, allocated, design and product configuration identification shall be mutually consistent and compatible. Should conflicts arise between such identification, the order of precedence shall be (a) functional, (b) allocated, (c) design, and (d) product, unless otherwise specified by the procuring activity.

4.3.6 Addendum to configuration identification. When an existing configuration item can be changed for a new application and it is required that the original configuration identification document be retained, the change can be described by means of an addendum to the configuration item specification. Use ' and format for preparation of an addendum to a CI specification shall be accordance with Appendix IV.

4.3.7 Inventory item identification. Configuration items previously procured and entered into the Government inventory and which are suitable for use as a part of the configuration baseline of the system or configuration item, shall be identified in an inventory item specification in accordance with FAA-STD-005. Appendix V provides supplementary information to be followed in the preparation of the inventory item specification.

4.3.8 Specification authentication. The Government will authenticate specifications developed by the contractor which are the contractual requirements through approval signatures. Government authentication of such documents through a configuration control decision, shall formally establish the respective baseline which that document represents as defined in paragraph 4. Changes to the specification subsequent to authentication by the procuring activity and its contractual incorporation shall be accomplished in accordance with formal change procedures e.g., as set forth in MIL-STD-480, FAA-STD-005 and this standard.

4.3.9 Computer Software Configuration Identification. Computer Software Configuration Item (CSCI) specifications, design documents, and listings, shall define software requirements and design details for a single CSCI. The subparagraphs below identify the specifications and design documents of the CSCI.

4.3.9.1 Requirements specifications. The Software Requirements Specification (SRS) and if applicable, Interface Requirements Specification (IRS) shall define system performance requirements allocated to a specific CSCI, as well as identify the major functional and interface requirements of the CSCI. Interface requirements shall include the interfaces between the CSCI and any other CSCI and any other CSCIs or HWCIs. The SRS, and if applicable IRS, shall be authenticated at the Software Specification Review and establish the allocated baseline for the CSCI.

4.3.9.2 Design documents and listings. The Software Design Document (SDD) shall define the design of the CSCI. Upon successful review of the SDD at the Preliminary Design Review, the contractor shall establish the Developmental Configuration for the CSCI. The contractor shall update the SDD and prepare the Interface Design Document(s) (IDD(s)) to define the detailed design of the CSCI. Upon successful review of the SDD and IDD(s), at Critical Design Review

Information Handling Services, 1999
August 11, 1999 06:36:18

the contractor shall enter these documents into the Developmental Configuration. The contractor shall then code and test software units, and enter the source and object code, and associated listings of each successfully tested unit into the Developmental Configuration.

4.3.9.3 Product specification. At the completion of formal testing of the CSCI, the contractor shall combine the updated design documents and software listings contained in the design baseline or developmental configuration to comprise a Software Product Specification (SPS) for the CSCI. The integrity of the SPS is established by the Physical Configuration Audit and dependent upon the accuracy with which the SPS describes the detailed configuration of the qualified (or to be qualified) CSCI. Upon authentication of the SPS following the Physical Configuration Audit, the SPS will be entered into the procuring activity's product baseline.

4.4 Configuration item identification. Identification numbering and marking requirements for configuration items and the associated configuration identification documentation shall be as contained in Appendix VI as supplemented by FAA-G-2100.

4.5 Engineering release requirements. The contractor shall maintain a current engineering release record of all specifications and drawings for configuration items accepted, or to be accepted, by FAA. The engineering release records shall interrelate with the contractor's internal system of controls to assure that all approved engineering changes have been incorporated in production item's, as-specified. 'Minimum criteria and capabilities to be provided by the contractor's engineering release system and his control system for verifying that manufactured products correlate with the released engineering data shall be in accordance with Appendix VII.

4.6 Engineering change proposals, deviations, and waivers. This procedure is used by prime contractors and Government activities for proposing, or requesting changes to or deviating from, a configuration identification for items which are developed, designed, or modified for the Federal Aviation Administration. (See Figure 2.) Also, it is to be used when the prime contractor requests delivery to the Government of an item, which during production or after having been submitted for inspection, is found to depart from specified requirements of the configuration identification. The contractor shall not incorporate any engineering change, deviation, or waiver in an item as described in the configuration identification prescribed by the contract, without the approval of contractual authorization. Contractual authorization will be required prior to the incorporation of an engineering change proposal (ECP) which affects contract cost, fee, schedule, or technical requirements specified–either in the contract, or in the configuration identification prescribed directly by its identifying number in the contract.

4.6.1 Functional, allocated, or product baseline documentation changes. Changes to functional or allocated documentation shall be formally documented by the contractor. After these baselines become a contractual requirement, changes require formal approval by the procuring activity. After

Information Handling Services, 1999
August 11, 1999 06:36:18

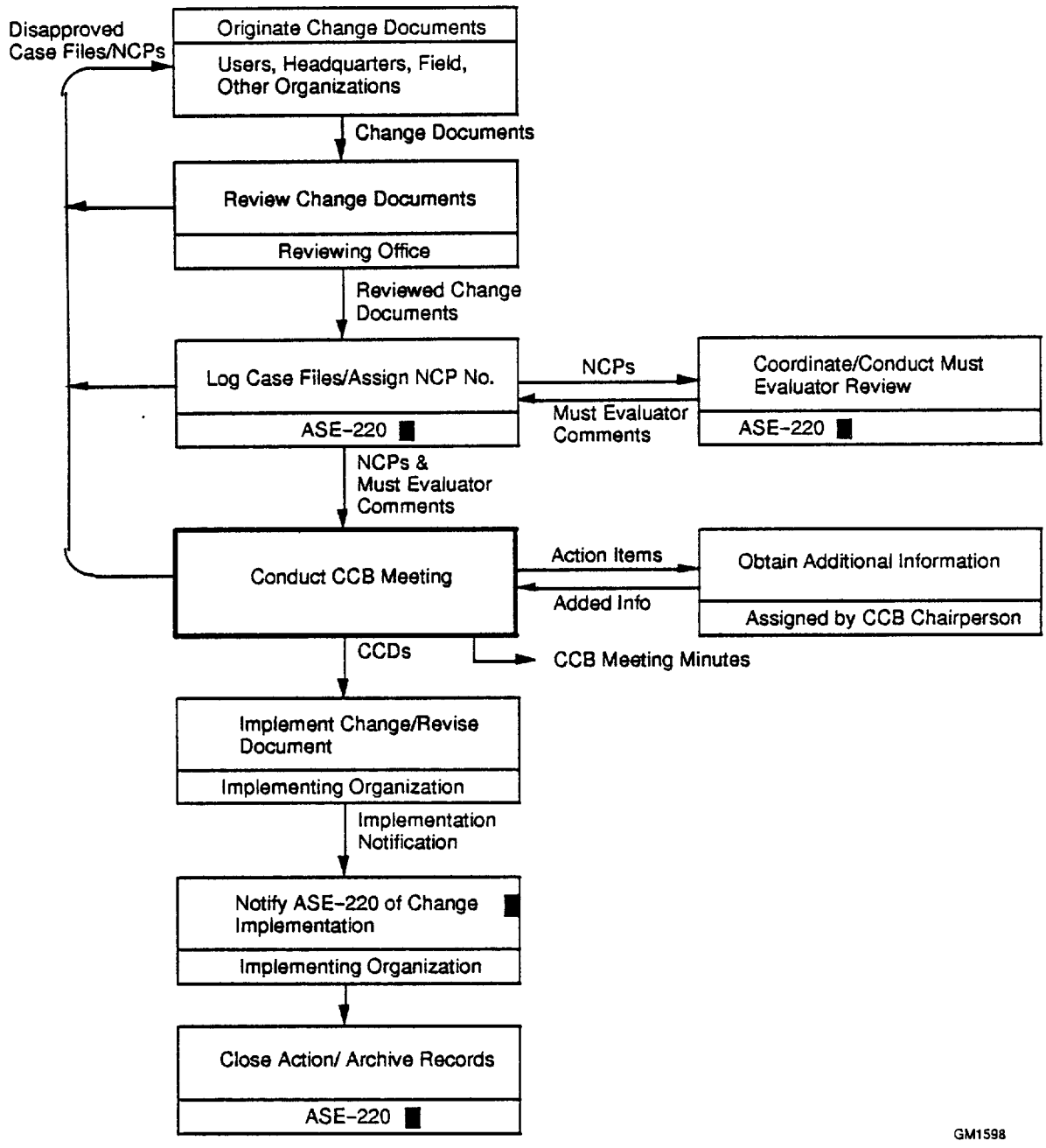

Figure 2 Baseline Change Process

Information Handling Services, 1999
August 11, 1999 06:36:18

the product baseline is established contractually, changes to the product documentation require formal approval by the procuring activity. This procedure is also to be used to control the form, fit, and function of privately developed/proprietary products used in configuration items. Appendix VIII provides criteria supplementary to MIL-STD-480 on engineering changes. Appendix IX provides procedures for implementing changes to computer software and its documentation.

4.6.2 Engineering change proposal (ECP) processing. After determining the need for a change, the processing consists of:

a. Describing the reason for change

b. Classifying the engineering change as Class I or Class II

c. Preparing the ECP form and submitting it to the FAA for further processing

d. Review by FAA

e. FAA approval/disapproval, or concurrence/nonconcurrence in classification

f. Incorporation of approved engineering change in the configuration item and in the data at the specified effective point.

4.6.3 Engineering change proposal (ECP) classification. The classification of engineering change proposals (ECP) shall be assigned by the originator, as Class I or Class II. The preparation of Class I and Class II ECPs is described in Appendix VIII.

4.6.4 Privately developed item. An engineering change to a privately developed item shall be classified Class I when it meets the criteria described in paragraph 80.4.1 of Appendix VIII.

4.6.5 Commercial off-the-shelf equipment (COTS). Configuration management performed on off-the-shelf equipment includes monitoring of supplied manuals, tracking of serial numbers and equipment location matrix, and tracking of installation space. Operational phase activities include monitoring of technical manuals and tracking of spares.

4.6.5.1 Technical manuals. COTS technical manuals are key instruments in any COTS procurement. The manuals should provide established CIs, serial numbers, a hierarchy, and maintenance information. The contractor shall ensure that the manuals are procured and include all the information necessary to identify the specific piece of equipment under procurement.

4.6.5.2 Proprietary information. The contractor shall develop an accountability system to ensure that vendor proprietary information is protected.

Information Handling Services, 1999
August 11, 1999 06:36:18

4.6.5.3 Maintenance level. Maintenance levels are to be identified in accordance with level of support identified in the contract work statement. For example, full support down to piece part, or medium support down to module.

4.6.6 Deviations. Prior to manufacture of an item, if a contractor considers it necessary to depart temporarily from the mandatory requirements of the configuration identification, he may request that a deviation be authorized. As an example, a deviation relating to an alternative material or process may be requested when the contractor can show that the delivery schedule cannot be met unless the deviation is granted. Items shall not be delivered incorporating a known departure from the specified configuration identification unless a request for a deviation has been approved in accordance with the requirements of this standard, or unless otherwise permitted by contractually authorized procedure. The processing of a request for deviation is discussed in Appendix VIII.

4.6.7 Waivers. Items or services which do not conform in all respects to the contract requirements shall be rejected. An item which through error during manufacture does not conform to the contractual configuration identification, but is considered suitable "as is", or can be made suitable to FAA after rework by an approved method shall not be delivered unless a waiver has been processed and granted in accordance with this standard or conditions outlined in the contract. The processing of a waiver request is discussed in Appendix VIII.

4.7 Reporting the accomplishment of updating/retrofit changes. The accomplishment of updating/retrofit changes is required to be reported in order to maintain status on all configuration items in the custody of a contractor, unless otherwise directed by the contract. Appendix X delineates the detailed procedures for reporting accomplishment of updating/retrofit changes by the contractor during test, and installation and checkout phases of the program. These procedures are intended for use only by contractor's test and field organizations to report Engineering Change Proposal (ECP) accomplishments to his home plant and other activities as directed by the procuring activity.

4.8 Specification maintenance. After initial release of a specification defining any of the three baselines as applicable to a specific contract, changes to each specification shall be formally approved, documented, and made part of the specification. Appendix XI delineates the detail requirements for specification change and maintenance for equipment specifications and related data. Appendix XII sets forth procedures which are applicable to maintenance of specifications and related data for computer software.

4.9 System allocation document. A system allocation document shall be prepared to identify the group of configuration items which are the basis for system design and integration. The system allocation document shall be maintained until completion of all system testing required to complete the system design and development program. The system allocation document shall be in accordance with appendix XIII.

Information Handling Services, 1999
August 11, 1999 06:36:18

4.10 Configuration audits. Configuration audits shall consist of a functional and a physical audit of items for compliance with the configuration identification. The purpose is to validate and document that the development of the configuration item and its configuration identification are accurate, complete, and have met functional and physical requirements; the actual performance of the configuration item meets with contract requirements; the development of the configuration item has been completed and it is ready for production and development; all engineering change proposals, and requests for deviations and waivers have been incorporated, verified, and documented; appropriate tests, analysis and acceptance requirements have been conducted, met, and documented; and all deficiencies are documented and resolved.

4.10.1 Functional Configuration Audit. The objective of the Functional Configuration Audit (FCA) shall be to validate that the HWCI's/CSCI's actual performance complies with its Hardware Development or Software Requirements and Interface Requirements Specifications. Test data shall be reviewed to validate that the hardware item or computer software performs as required by its functional/allocated configuration identification. For HWCIs/CSCIs developed at Government expense, a FCA shall be a prerequisite to acceptance of the HWCI/CSCI.

4.10.2 Physical Configuration Audit. The Physical Configuration Audit (PCA) shall be the formal examination of the as-built version of a configuration item against its technical documentation in order to establish the product baseline. After successful completion of the audit, all subsequent changes are processed by engineering change action. The PCA also determines that the acceptance testing requirements prescribed by the documentation is adequate for acceptance of production units of a CI by quality assurance activities. The PCA includes a detailed audit of engineering drawings, specifications, technical data and tests utilized in production of HWCIs and a detailed audit of design documentation, listings, and manuals/handbooks for CSCIs. The review shall include an audit of the released engineering documentation and quality control records to make sure the as-built or as-coded configuration is reflected this documentation.

a. When the developing contractor is also the contractor for producing production articles, the following shall apply:

(1) Achievement of the key functional characteristics of the configuration item shall have been demonstrated in those cases where production/release is authorized prior to completion of the FCA.

(2) The contractor shall identify any differences between the physical configuration of the selected configuration item and the development configuration item used for the FCA, and shall certify or demonstrate to the Government that these differences do not degrade the functional characteristics of the selected configuration item.

Information Handling Services, 1999
August 11, 1999 06:36:18

(3) If the FCA has not been completed prior to accomplishment of the PCA, the Government may conditionally approve hardware production units until the FCA is completed, provided that other acceptance requirements for the hardware units have been met.

b. Where the developing contractor is not preselected to be the production contractor, the following shall apply for the developing contractor:

(1) The most complete development hardware unit of the HWCI will be selected for the PCA.

(2) The FCA must have been accomplished prior to completion of the PCA.

(3) The contractor shall identify any differences between the physical configuration of the selected configuration item and other development configuration item used for the FCA, and shall certify or demonstrate to the Government that these differences do not degrade the functional characteristics of the selected configuration item.

4.10.3 Relationship of audits to other reviews. Wherever practicable and appropriate, configuration audits shall be accomplished in conjunction with other audits and reviews. MIL-STD-1521 establishes procedures, tasks, and responsibilities for conducting configuration audits. All reviews and audits will be done in accordance to the Statement of Work.

4.11 Configuration management records, reports, and data. Configuration management records and reports shall insure that:

a. There will be a configuration record documenting all approved changes to all configuration items.

b. Configuration status accounting reporting of a configuration item shall be implemented at the time the product configuration identification is approved/accepted. The contractor shall insure that configuration status accounting is maintained until the last unit is delivered. The documentation shall be as established by the contract and as a minimum shall include identification of:

(1) Technical documentation comprising the configuration identification

(2) Essential configuration item data elements

(3) Contractual information required to be included in the records/reports for each configuration item, including contractor identification code

Information Handling Services, 1999
August 11, 1999 06:36:18

(4) Proposed Class I changes to configuration and the status of such changes.

(5) Approved changes to configuration, including the specific number and kind of configuration items to which these changes apply, the implementation status of such changes, and the activity responsible for implementation.

c. The contract will specify the specific data base supplied configuration management reports required for the program. Format, content and timing will be as agreed between the contractor and the procuring activity.

4.11.1 Data requirements. The deliverable configuration management data requirements will be specified in the Contract Data Requirements List (CDRL) (DD Form 1423), attached to the request for proposal, invitation for bids, or the contract, as appropriate.

4.11.2 Electronic data. The CM data base shall be delivered in an electronic format compatible to the FAA to provide an electronic means for traceability as specified in the contract work statement. This avoids the necessity of performing a format conversion. It also enhances time, cost and problem solving for both the contractor and the procuring activity, and facilitates the transitioning and hand-off of CM responsibility to the FAA user organizations.

4.12 Quality assurance provisions/qualification requirements. A verification matrix shall be included in any of the hardware specifications prepared per the appendixes of this standard. This matrix provides for the correlation of Section 3 performance requirements with Section 4 verification requirements. Figure 3 is a sample verification requirements traceability matrix. Software specifications shall be prepared in accordance with the applicable Data Item Descriptions.

Information Handling Services, 1999
August 11, 1999 06:36:18

D = Demonstration I = Inspection T = Test X = Not Applicable

Section 3 Requirements Paragraph Reference	Verification Phase and Method			
	Subsys Level	Integration Level	Site Level	Remarks
3.2.7	X	D	D	*
3.2.8	I	I–D	I	
3.2.8.1	I	I	I	
3.2.8.1.1	I	I	I	
3.2.8.1.2	I	I	I	*
3.2.8.1.3	X	D	D	
3.2.8.2	I	I	I	
3.2.8.3				
3.3				

Figure 3. Verification Requirements Traceability Matrix (Sample)

Information Handling Services, 1999
August 11, 1999 06:36:18

APPENDIX I

10. CONFIGURATION MANAGEMENT PLAN

10.1 Purpose. This appendix describes the requirements for the development of a configuration management plan for the implementation of configuration management requirements invoked by FAA. This appendix is applicable to CM requirements for the subsystem and HWCIs including HWCIs containing software. For CSCIs, the criteria in the Software Development Plan shall be included in the software section of the Configuration Management Plan. The contractor, dependent on contractual obligations requirements, may address hardware and software configuration management requirements in separate volumes of the single plan. This should allow, if necessary, specific development of software CM requirements while ensuring continuity of the configuration management system.

10.2 Scope. Depending on the terms and conditions of the request for proposal or the contract, the requirements that prescribe what is to be done to implement configuration management shall be planned and documented in a configuration management plan prepared by the contractor, unless otherwise specified by the procuring activity. The plan may be limited to defining the contractor's implementation of configuration management as it relates to the configuration identification, configuration control, configuration status accounting and configuration audits. When required to be furnished to the procuring activity, the plan is intended primarily as an exchange of information between the. procuring activity and the contractor on the. configuration management policy and methods of the contractor, as he intends implementation on a given contract effort, and this increases the probability of clear understanding of the intent of both parties. For the most part, the document should be written in simple positive statements that implement the precise configuration management requirements to be met by the contractor.

10.3 Organization and content.

10.3.1 Section 1. Organization. The contractor shall describe the program or project management relationship to configuration management. An organization chart with narrative description of the key organizational elements affected by contractual requirements for configuration management shall be presented. The contractor shall identify the organization level of engineering control group(s) as well as their authority and responsibility influencing the program. A discussion of the contractor's policy and procedures determining the formal establishment of configuration, and control of changes to established configuration, as these relate to specification preparation, drawing preparation, engineering release, ECP preparation, configuration management audits, configuration indexing and accounting, and quality control procedures (only to the extent they assure delivery of approved configuration) shall be included herein, to the level of detailed necessary to determine the integrity of configuration management practices.

Information Handling Services, 1999
August 11, 1999 06:36:18

10.3.2 Section 2. Configuration identification.

10.3.2.1 Specifications. The plan shall identify the specifications to be contractor prepared, the existing specifications for inventory items, and the use of these specifications to establish and control configuration identification. The division of authority and responsibility between the contractor and Government for the establishment of configuration identifications, changes to existing specifications and cost and schedule impacts, shall be clearly delineated. The plan shall identify the intended point in the program when the above specifications shall be presented for delivery (or otherwise made available) to the procuring activity. The plan shall identify the applicability of FAA-STD-005, Preparation of Specification Documents and its appendixes, and this standard, to the project (contract).

10.3.2.2 . Drawings. This section shall define the drawing practices for application to this program, and the application of FAA-STD-002, Engineering Drawings, DOD-STD-100, Engineering Drawing Practices, DOD-D-1000, Drawings, Engineering and Associated Lists, and appendixes of this standard.

10.3.3 Section 3. Configuration control. The contractor shall define the policies and procedures used within his organization for control in establishing configuration identifications, and for processing changes to established configuration identifications. This section shall be specific on the control of technical interfaces, both between the contractor and the Government, and the contractor and other contractors. Plans for implementation of the appendices of this standard to the project (contract) shall be stated.

10.3.4 Section 4. Configuration status accounting. The contractor shall state his plans for application of configuration index and status accounting records, his status accounting reporting intentions, and the report formats to be used.

10.3.5 Section 5. Subcontractor/vendor control. The contractor shall indicate his proposed methods for control over subcontractors and vendors, insofar as it impacts on his configuration management commitments to the FAA. The methods used to determine their capability and monitor their ability to support the requirements of configuration management shall be explained.

10.3.6 Section 6. Program milestones. The major milestones shall include but not be limited to:

a. Establishment of configuration control board

b. Phasing for specification program implementation, including specification maintenance

Information Handling Services, 1999
August 11, 1999 06:36:18

c. Establishment of each of the configuration identifications

d. Establishment of interface control agreements with other contractors

e. Establishment of configuration index and status accounting procedures.

10.3.7 Section 7. Management integration of configuration management. The contractor shall describe the integration of configuration management activities with other project and program/management activities. He shall be specific in defining the relationship between configuration management at the configuration item level, and its relationship to the work breakdown structure for control of work authorization and cost control in his facilities). He shall be specific in defining the relationship between events critical to configuration management and schedule control of the program project, e.g., sequencing of design reviews, release of engineering, production, test, logistic support events, audits, etc.

10.3.8 Section 8. Configuration audits. The contractor shall describe his plans for conducting/supporting the following configuration audits including a description of the audits: .

a. Functional configuration audit (FCA)

b. Physical configuration audit (PCA).

10.3.9 Section 9. Software specific configuration management.

10.3.9.1 Developmental configuration. This paragraph shall identify the contractor's internal Developmental Configuration(s) to be used in the development of the CSCI(s). For each Developmental Configuration identified, the method of establishing it shall be described and the contents shall be listed. For example, the engineering release of the first draft of the Software Top Level Design Document (STLDD), prior to submitting it at the Preliminary Design Review, shall establish the internal Developmental Configuration.

10.3.9.2 Report for software problems and changes. This paragraph shall identify and describe the format used to document software problems and changes detected during software development. This report shall include:

a. Subsystem or Project Name - The name of the subsystem or development project to which this report applies.

b. Originator - The name, telephone number, and designation of the organization submitting the report.

Information Handling Services, 1999
August 11, 1999 06:36:18

c. Problem Number - The assigned problem number (once a problem number has been assigned in accordance with established project configuration control procedures).

d. Problem Name - A brief phrase descriptive of the problem and descriptive of similar problems, if applicable.

e. Software Element of Document Affected - The specific software element(s), document(s) paragraph(s), or both to which the report applies, including appropriate configuration identification and version number, if applicable. Include all established baselines for developmental configurations affected.

f. Origination Date - The date the report is first submitted.

g. Need Date or Priority - The date the fix is needed in order to maintain established schedules or priority in accordance with established standards.

h. Description of Problem - A description of the problem and the conditions, inputs, and equipment configuration under which the problem arises. A description of the activities leading up to the problem occurrence. Sufficient problem information to permit duplication and analysis. Include relationship to other reported problems and modifications.

i. Analyst - The name, telephone number, and organization of the individual assigned to analyze the problem.

j. Date Assigned - The date the analyst was assigned.

k. Date Complete - The date the analysis was completed.

l. Analysis Time - The time required to analyze the problem report.

m. Recommended Solution - After analysis of the problem, the recommended solution and alternative solutions, if available. The nature of the recommended solution by a short descriptive phrase. When applicable, supporting rationale and test results.

n. Impacts - The cost, schedule, and interface impacts if the solution is approved. Also, performance impacts if the solution is not approved. As applicable, include the impact on the other systems, configuration items, other contractors, system employment, integrated logistics support, system resources, training, etc.

o. Problem Status - The problem status designated by the configuration control procedures.

Information Handling Services, 1999
August 11, 1999 06:36:18

p. Approval of Solution - To be designated by the cognizant configuration control authority.

q. Follow-up Action - Actions following resolution of the problem.

r. Corrector - The name, telephone number, and organization of the individual correcting the problem.

s. Correction Date - The date the problem was corrected.

t. Version Number - The version in which the problem will be corrected.

u. Correction Time - The time required to correct the problem.

v. Implementation Solution - A brief description of the implemented solution to the problem.

10.3.9.3 Review procedures. This paragraph shall describe the purpose of and the procedures to be employed by any review boards (e.g., Software Configuration Control Board) associated with the flow of configuration control. This paragraph shall also described how the procedures used by any Review Boards, in conjunction with the configuration identification scheme, provide historical traceability.

10.3.9.4 Storage, handling and release of project media. This paragraph shall describe the methods to formally control the storage, handling, and release of software and documentation (including master copies) during the development process.

10.3.9.5 Source code control. This paragraph shall describe the restrictions applied in order to assure the integrity of a data base and its elements. It is essential that data (either initial input or changes) be restricted to authorized individuals. The controls described in the configuration management plan must be multi-level such as access to a terminal for input, a file, and to a specific data element or elements.

10.3.10 Relationship to quality plan. The contractor shall describe the interrelationship in each of the elements of configuration management with the quality program functions and indicate those relationships in the quality program plan.

Information Handling Services, 1999
August 11, 1999 06:36:18

9003329 0007960 799

(THIS PAGE INTENTIONALLY LEFT BLANK)

Information Handling Services, 1999
August 11, 1999 06:36:18

APPENDIX II

20. INTERFACE CONTROL

20.1 Purpose. This appendix provides the criteria and guidance for the establishment of interface control.

20.2 Scope. Guidance for documentation and control of all physical and functional interfaces of system, equipment, computer software, facilities, and installation requirements are provided in this appendix.

20.3 Applicability. When specified in the contract, the criteria and guidance of this appendix are applicable to all contractors whose configuration items interface with other configuration items of another contractor or procuring activity.

20.4 General guidance. The procuring activity will determine the requirements for the control of interfaces and installation during the system requirements process or equivalent phase. The responsibility for developing configuration identification covering system interface requirements may be contractually delegated in whole or in part to the Interface Control Working Group (ICWG) secretariat.

a. Interfaces detailed during the system requirements process phase shall be treated as system criteria, and shall not be established as part of the interface control activity. This exclusion allows contractors and/or the Government the flexibility to negotiate interface agreements among themselves, within the limits of the established system criteria. (See figure 4.)

b. Programs entering the acquisition phase can be broken into two categories as follows:

(1) Programs requiring a total hardware and computer software development cycle (encompassing a system/equipment/computer software design phase).

(2) Programs not requiring a total development cycle (where program progresses directly from the system requirements process to production).

c. The procuring activity shall contractually specify all procedures for an interface control activity which may include the use of an Interface Control Working Group (ICWG). The chairperson of the ICWG will be designated by the procuring activity Project Manager with the interface control contractor as ICWG Secretariat. The ICWG Secretariat will be responsible for status accounting and reporting.

Information Handling Services, 1999
August 11, 1999 06:36:18

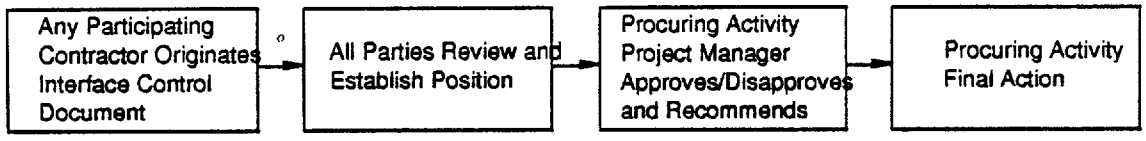

Notes:

1. Any Participating Contractor Originates Interface Control Drawing

2. All Affected Parties Review Drawing and Submit Recommendation to Procuring Activity Technical Officer or the Interface Control Contractor

3. Procuring Activity Project Manager or the Interface Control Contractor Reviews Drawing and, if it Complies with Existing Contractual Requirements, Approves or Disapproves

   (a) If Drawing Is Acceptable by Project Manager and All Affected Parties, the Drawing Is Forwarded to the Interface Control Contractor for Review and Final Action

   (b) If Disagreement Exists within the Group of Affected Parties, the Procuring Activity Project Manager Forwards the Document with Recommendations to the Interface Control Contractor for Resolution

Figure 4 Interface Control Documents

GM1597

Information Handling Services, 1999
August 11, 1999 06:36:18

d. For those programs where the use of an ICWG is not applicable, the procuring activity will contractually specify other procedures for an interface control activity.

e. Relationships, responsibilities, and requirements will be as specified in the contractual statement of work.

20.5 Interface Control Working Group (ICWG).

20.5.1 The ICWG serves as the official communications link between program participants to resolve interface problems, document interface agreements. The ICWG shall consist of at least one member from each of the contractors and Government agencies participating in the system development. A roster of all affected contractors and agencies represented on the ICWG will be maintained by the procuring activity and this information provided to all participants.

20.5.2 The establishment of system interface control by the ICWG requires the identification and definition of interfaces, scheduling, preparation, approval, release, and control of formal interface documents.

20.6 Interface control documents. The establishment of system interface control by the procuring activity requires the identification and definition of interfaces, scheduling, preparation, approval, release, and control of formal interface documents. Interface control documents shall be used to record the design agreements between system-participating contractors as authorized by the procuring activity. Interface control documents, along with production drawings, diagrams, facility construction drawings, and specifications, shall provide a means to evaluate and control all mutually interdependent/interacting design parameters and interfaces between participants' equipment/computer programs or facilities.

a. Interface control documents are used to control certain interfaces, where a single participant controls the design of both configuration items, when deemed necessary by the procuring activity.

b. Interface control documents and revisions thereto will be scheduled for completion at the earliest need of the program to support any participating contractor or agency. The documents and/or revisions will be scheduled and approved by the originator to support participating contractor's preliminary design reviews at the earliest need of the program. They shall be scheduled for completion, released by the originating contractor, signed by the interfacing participants, and approved by the ICWG Chairman or FAA Project Manager prior to the time of the applicable critical design review. All documents/revisions shall be complete, approved, and system-released prior to the time of the physical configuration audit.

Information Handling Services, 1999
August 11, 1999 06:36:18

c. Individual interface control documents developed under the procedures of this appendix shall be maintained by the originating contractors, to reflect all approved changes. However, the interface control contractor shall maintain an up-to-date, reproducible file of all interface control documents.

d. Interface control documents shall reflect the effects of any waiver or deviation on the interface depicted, but shall not be used as the primary means of documenting such waivers, and shall not be used in the fabrication of hardware.

e. Interface control documents shall be prepared in accordance with FAA-STD-025. However, the procuring activity may contractually specify the details and/or drawing instructions as it deems necessary.

f. Interface control document identification numbers shall be provided by the FAA to the interface control contractor on an as required basis.

20.7 Interface control responsibility delegation. Participating contractors procuring activities shall be designated prime and collateral responsibilities for the ICWG. See the matrix (figure 5). The participating contractors and procuring activity have collateral responsibilities where so indicated.

20.7.1 Exclusion. The ICWG shall not have the authority to approve fixes to facilities, computer software, or equipment required because of non-conformant interface conditions 'discovered in the field or at equipment/computer software acceptance. However, the ICWG shall assist the procuring activities responsible for approval action upon request, and shall review and recommend fixes for resolution of interface incompatibilities.

20.8 ICWG control sheet. The ICWG actions in connection with interface control documents shall be recorded on a form similar to figure 6. Any other form may be used as long as it provides the necessary information.

Information Handling Services, 1999
August 11, 1999 06:36:18

Responsibilities	Participating Contractors	Procuring Activity
Provide materials and services to manage	X	X
Establish policy and procedure and chair ICWG		X
Administrative control and processing ICWG	X	X
Prepare ICD authorized by procuring activity	X	X
Assist in resolution of interface problems	X	X
Establish complete interface control requirements	X	X
Use specs and drawings to identify interfaces	X	X
Review interface recommendations with ICWG reps	X	X
Recommend required controls including gages	X	X
Request procuring activity direction	interface control contractor	
List approved ICDs in system ICD	interface control contractor	
Assign ICD preparation responsibility	interface control contractor	
Obtain ICD agreements and signatures	X	X
Final ICD review, approval, and release		X
Schedule and document ICWG actions and update	interface control contractor	
Issue meeting agenda 5 days before meeting	interface control contractor	
Issue meeting minutes 5 days after meeting	interface control contractor	
Participate in and support ICWG meetings	X	X
Identify and evaluate class 1 changes for impact	X	X
Evaluate problems and issue action items	X	X
Prepare and distribute approved ICD	interface control contractor	
Maintain file of ICDs	interface control contractor	
Prepare and maintain master tooling documents	X	
Maintain ICWG activity status	X	
Support participating contractor activities	X	
Conduct fit checks	X	

Notes:

ICWG responsibilities of the interface control contractor, participating contractors, and the procuring activity include:The interface control contractor has the prime responsibility in seeing that all of the above actions are accomplished. He has the sole responsibility for those items where the term "Interface control contractor" appears. An "X" in the above columns indicates that the participating contractors or the procuring activity, or both, have collateral responsibility for the actions shown.

Figure 5. Matrix of Interface Control Responsibilities

Information Handling Services, 1999
August 11, 1999 06:36:18

ICWG Control Sheet

Brief Description of Functional Physical Interface	Agency Affected Cont/Govt	Interface Control Drawing			Tooling Gage Documents, If Affected	ICWG Reviews			ICWG Action Item No.	ICD App Date
		No.	Title	Rev		Participating Agencies	Date	Date Mins Distr		

Figure 6. Example of ICWG Control Sheet

Information Handling Services, 1999
August 11, 1999 06:36:18

APPENDIX III

30. CRITERIA FOR SELECTING CONFIGURATION ITEMS

30.1 Purpose. This appendix provides criteria for selecting Configuration Items. As used herein, CIs also encompass Computer Software CIs (CSCIs).

30.2 Scope. The criteria of this appendix shall be used in the CI selection process whenever it occurs during the life cycle.

30.3 Applicability. Each contractor shall be responsible for his compliance with this appendix as well as the compliance of his subcontractors, vendors, and suppliers in accordance with paragraph 1.3 of this standard.

30.4 General considerations.

30.4.1 Need for configuration item identification. Selection of CIs is based on the definition contained in FAA Order 1800.8 "an aggregation of hardware/software, or any of its discrete portions, which satisfies an end use function... CIs are those specification items whose functions and performance parameters must be defined and controlled to achieve the overall end use function and performance".

30.4.2 Level of government control. The CI must be a manageable level of assembly. The selection of CIs is normally a function of anticipated design and should be independent of the concept for future-reprocurement. The selection process, which separates the elements of a system into individually identified subsets for the purpose of managing their development, usually limits the designation of CIs to major subsystem levels of the Work Breakdown Structure, or to a critical item of a lower level, when so identified. CI selection reflects an optimum management level during acquisition. This level is one at which the procuring activity specifies, contracts for, and accepts individual elements of a system.

30.4.3 Logistics and life cycle considerations. The selection of items to be managed as CIs should be determined by the need to control an item's inherent characteristics or to control that item's interface with other items. The selection is a management decision normally accomplished through the system engineering process in conjunction with configuration management and with the participation of logistics. Selecting CIs should be with a full view of the life cycle cost and management impacts associated with such a designation. Choosing too many CIs increases the cost of control; choosing too few or the wrong elements as CIs, runs the risk of too little control through lack of management visibility. It must be determined what control is needed to be exercised in light of cost/benefit trade-offs. The CI selections are made accordingly.

Information Handling Services, 1999
August 11, 1999 06:36:18

30.4.4 Common subsystem considerations. On development programs for subsystems or support equipment that will be common to more than one system, the basic CI should be that assembly that is common to all applications. An assembly part that is required to meet interface or other requirements peculiar to one of the systems should be identified as a separate CI in that system.

30.4.5 Computer software considerations. Computer software should be designated as CIs in the same way as other elements of the subsystem. General selection of component CIs within a computer program designated as a CI is dependent upon the system breakdown structure. Any sub-program which is designated for use in more than one higher level computer program should be a separate CI. The firmware components required for a computer program must be designated as CIs and given a configuration identification.

30.4.6 Schedule considerations. The major elements comprising the system should be identified as CIs during the Demonstration and Validation Phase. Early selection of CIs is important since management emphasis becomes greater as development progresses. As development continues and logistic or technical considerations surface, additional items can be designated CIs. Usually, the CI selection process should be essentially complete by PDR for hardware CIs and SSR for CSCIs.

30.5 Specific considerations. The following paragraphs discuss some of the considerations upon which the CI selection decision shall be based.

30.5.1 System engineering guidance. Configuration items shall be selected in accordance with guidance provided by system engineering in the contract work statement.

30.5.2 Engineering release system. The CI must allow the contractor to release engineering changes at an assembly level which is reportable and which enables verification of change incorporation, i.e., does not preclude change incorporation verification in a lower level assembly.

30.5.3 Criticality. An item should be identified as a separate CI if failure of the item would adversely affect security, human safety, the accomplishment of a mission, or national defense, or would have a significant financial impact.

30.5.4 Existing or modified existing design items. Existing items that are not CIs developed at government expense should not generally be candidates for reidentification as new CIs on new programs. Existing/modified design and commercial off-the-shelf equipment/computer software should not necessarily be excluded from CI selection. The considerations identified in the remaining subparagraphs of paragraph 30.5 should be addressed prior to making a decision.

Information Handling Services, 1999
August 11, 1999 06:36:18

30.5.5 New or modified design. Careful consideration shall be given new or modified design items, wherein more than a modest degree of complexity, utilization of new materials, processes or technology is involved; and, where the government wants direct control over the performance requirements for that item, at a specific time, i.e., when the government is directly concerned with detailed developed.

30.5.6 Interfaces. Interfaces among HWCIs and CSCIs should be simple. Functions which are highly data or control interdependent should be allocated to the same HWCIs or CSCIs. Functions which exhibit a high disparity between input and output data rates should be allocated to separate HWCIs or CSCIs.

30.5.7 Susceptibility to change. The higher the anticipated or estimated degree of change or modification which might be expected after the item is operational, the higher the likelihood for selection as a CI.

30.5.8 Maintenance. When different agencies have responsibility for maintaining parts of an element, consider breaking the element into separate CIs. An item which is clearly designated as "Repairable" is much more a CI candidate than one which is not repairable. Eventually logisticians must deal with the Line Replaceable Units (LRUs) which comprise the principal components of the subsystem. However, designating CIs at the LRU level at the onset of full scale development (FSD) would add significant cost to the development effort, especially in the area of change management. The LRU level is usually too low a level for effective configuration control during development.

30.5.9 Support equipment considerations. Without proper planning, minor items of support equipment could swell the list of CIs. Minor in this context refers to items such as individual hand tools. There will usually be little or no change activity on many of these minor items. It may be sufficient to list these items as "support equipment" in paragraph 3.24 of the CI Type B specification per FAA-STD-005 paragraph 20.3.2.4.c.

30.5.10 Subassembly characteristics. Subassemblies (within a CI) should have a common mission relationship; should have common installation and deployment requirements (ground and airborne segments would be separate CIs); should have a cycle of changes dependent on the CI; and should not be the subject of separate test or formal acceptance by the procuring activity (should be accomplished as part of a CI). If these conditions are not met, the subassembly should be either part of another CI or a separate CI.

30.5.11 Types. If there are different configurations due to different adaptation data for each operating location, the different configurations should be identified by types (FAA-STD-005 paragraph 4.1.2 and 4.3b) within a single CSCI.

Information Handling Services, 1999
August 11, 1999 06:36:18

30.5.12 Function. A given HWCI or CSCI should avoid mixing training, operation, test and maintenance, and support functions.

30.5.13 Supplier. Elements provided by different suppliers should be assigned to separate CIs.

30.5.14 Use. Elements which are general purpose in nature, require the capability to be operationally reprogrammed, or are intended to be reused in another system or are likely to be changed after initial deployment should be considered as separate CIs.

30.5.15 Location. The functions allocated to a HWCI or CSCI should not be partitioned among separate geographic areas. Functions allocated to physically distinct processors in a distributed environment should be considered as separate CIs.

30.5.16 Size. HWCI or CSCI selections which cannot be made on the basis of other criteria should be made to keep the HWCI or CSCI to manageable proportions.

30.5.17 Schedule/Phasing. Elements scheduled for development, testing, and delivery at different times should be assigned to separate HWCIs or CSCIs.

30.6 Effects of CI selection. CI selection affects cost, schedule and performance for the Government, prime contractors, subcontractors and suppliers. The effects of CI selection should not be permitted to occur automatically upon selection of an item as a CI. Tile effects which are unnecessary or premature can be tailored out for each CI by means of an appropriate contractually recognized vehicle, e.g., Program Plan, Statement of Work, CM Plan. Selection of an item as a CI for manageability may be based on its administrative complexity, technical (engineering) criticality or maintenance (logistics) criticality. The following is a listing of the usual effects of CI designation:

a. Formal preparation of discrete configuration identification - most often in the form of a specification(s).

b. A discrete development or requirements specification and a companion product specification.

c. Government approval of changes over the configuration identification governing the item.

d. Continuing an accurate recording of the exact configuration status of the CI, including providing field activities precise data dealing with impending or completed modification actions.

Information Handling Services, 1999
August 11, 1999 06:36:18

e. Providing traceability of detailed design for follow-on activity, including historical data and individual status information for accident investigations, failure analysis, etc.

f. Individual design review activity (PDR, CDR, FQR, etc.) during development.

g. Individual qualification testing and reporting.

h. Individual functional and physical audits (FCA and PCA) at the conclusion of development.

i. Discrete and separate "related" ECP development preparation, review, approval and negotiation (for changes to CIs).

j. Separate identification indexes and qualification records.

k. Separate nameplates and discrete CI identifiers (i.e., CI number, type, model, series, etc.).

l. Preparation of separate operating and user manuals.

30.7 Effects of selecting too many CIs. Too many CIs may result in the hampering of visibility and management rather than improving it. These effects include:

a. Increased administrative burden in preparing, processing, "and status. reporting of engineering changes which tends to be multiplied by the number of CIs.

b. Increased development time and cost as well as the possibility of creating an inefficient design.

c. Possible increase in management effort, difficulties in maintaining coordination and unnecessary generation of paper work.

30.8 Effects of selecting too few CIs. Too few CIs may result in costly logistics and maintenance difficulties. The following may result:

a. Loss of identity through separation of affected portions of a CI during field or depot maintenance of modification installation activity.

b. Inability to control like individual remove/replace items when CI identification and control is at the "set" level, e.g., a storage battery set.

Information Handling Services, 1999
August 11, 1999 06:36:18

c. Loss of operational use of one function because required maintenance on another function requires action against the CI level, e.g., a CI having separate VHF-UHF functions loses both when maintenance must be done on either function.

30.9 CI selection checklist. The following questions should be used in selecting CIs tailored to individual program/project requirements. If most of the questions can be answered NO, the item probably should not be a CI. If most of the questions can be answered YES, the item probably should be a CI. If the questions can be answered with approximately equal numbers of YESs and NOs, additional judgment is needed to determine if the item should be a CI. The selection of CIs is a management decision based on experience and good judgment. It should be kept in mind that some of the factors such as serialization and nameplates will be required, regardless of CI selection, e.g., part of a higher level assembly.

a. Is it a critical high risk, and/or a safety item?

b. Is it readily identifiable with respect to size, shape and weight (hardware)?

c. Is it newly developed?

d. Does it incorporate new technologies?

e. Does it have an interface with hardware or software developed under another contract?

f. With respect to form, fit or function, does it interface with other items whose configuration is controlled by other entities?

g. Is there a requirement to know the exact configuration and status of changes to it during its life cycle?

Information Handling Services, 1999
August 11, 1999 06:36:18

APPENDIX IV

40. ADDENDUM TO CONFIGURATION ITEM SPECIFICATION

40.1 Purpose. An addendum to an existing configuration item specification is used to describe requirements for a new configuration item which is similar to the existing configuration item.

40.2 Scope. The addendum specification creates a new configuration item specification; i.e., identi- fication different from the original specification. The specification so created (basic specification plus addendum) then becomes controlled and maintained as a separate and distinct specification, to be updated and revised as necessary, independent of changes to the basic specification from which it was created.

40.3 Applicability. An addendum to an existing specification is used when there is a requirement to retain the existing configuration item for some applications and the new (modified) configuration item can be created by minimum redesign of the existing configuration item. The preparation of an addendum to an existing specification shall be used when the following conditions are satisfied:

a. There is sufficient reason to establish direct relationship between the new configuration item and an existing configuration item as a basis for design and development; e.g., progressing from one type, model, series of a CI to another; minor changes must be accomplished to a very limited number of units of a CI for a specific mission.

b. The basic specification, to which the addendum is prepared, complies with the requirements of FAA-STD-005 and this standard, with respect to format and content.

c. An addendum shall be created only when the configuration item identification is different from that of the configuration item specified in the basic specification.

d. When more than 40 percent of the paragraph requirements in the basic specification must be changed to identify the new configuration, a completely new specification shall be generated.

40.4 Preparation instructions. The specification addendum is prepared in a manner which permits ready comparison to the exact relationship between two configuration items. This is accomplished by writing the new specification (addendum) by direct reference to the existing specification on a paragraph-by-paragraph basis, recording in the new specification specific reference to each paragraph in the existing specification and noting each addition, deletion, or change. Where no change is necessary, specify the

Information Handling Services, 1999
August 11, 1999 06:36:18

paragraph number followed by the wording "no change". When no sub-paragraphs are changed, only the related major paragraphs need be listed. The paragraph numbering between the two documents shall be identical, with the exception of paragraphs added to the new document which do not have an exact counterpart in the existing specification. For convenience of preparation, as an option, all paragraphs having "no change" can be collectively identified in a single paragraph. A specification created in this manner is a new and complete specification in every sense with a new specification number assigned per FAA-STD-005. The basic specification shall be the first entry in section 2; applicable documents, of the addendum specification.

40.4.1 Addendum specification cover page. When a new specification is created by the preparation of an addendum to an existing specification, an addendum cover page shall be prepared which conforms to the format and includes the content required by sample format A as shown on figure 7. All of the data on the addendum cover page refers to the specification used as the basic document against which the addendum is prepared. Each item of data to be entered on the cover page shall be transcribed from the title page and the specification change notice(s) (SCN) of the basic specification.

40.5 Change to addendum specification. Both the specification created by the addendum and the basic specification to which the addendum is prepared shall have independent change cycles. A specification change notice (SCN) to either is not automatically a change to both. Each change to either document shall be reviewed, and if it is desirable to change both the basic specification and the specification prepared as an addendum, then two separate specification change notices shall be prepared.

Information Handling Services, 1999
August 11, 1999 06:36:18

SAMPLE FORMAT "A"

Specification Number 12345

Code Indent XXXXX

(Date)

ADDENDUM SPECIFICATION

This specification has been prepared as an Addendum to:
*Prime Item (Development/Product Fabrication) Specification

Specification No. _____

CI No. _____

FOR

(Approved Title)

(Type designator, CI number, etc.)

This exact content of specification (insert same number as above) used as the basic document for this addendum is the revision referenced above plus the following specification change notices to specification (insert same number as above.)

*Note: Use Development if Part 1 Addendum and Product Fabrication if Addendum to Part 2.

GM1594

Figure 7 Cover Page – Addendum Specification

Information Handling Services, 1999
August 11, 1999 06:36:18

9003329 0007976 056

(THIS PAGE INTENTIONALLY LEFT BLANK)

Information Handling Services, 1999
August 11, 1999 06:36:18

APPENDIX V

50. INVENTORY ITEM SPECIFICATION

50.1 Purpose. This appendix provides supplementary information for use in preparation of an inventory item specification in accordance with Appendix XII of FAA-STD-005. (Paragraph numbers cited below refer to paragraphs to the inventory item specification format of FAA-STD-005, Appendix XII).

50.2 Section 3, Requirements. Each paragraph of the inventory item specification which identifies an inventory item from the Government inventory shall include the following information:

Inventory Item Specification Number Nomenclature Federal Stock

Class Code Part Number

50.3 Section 10, 20, etc., Appendixes. The function specification referred to here shall be the existing specification (Government- or contractor-prepared) which identifies the inventory item to be used. A new specification shall be prepared only when the inventory item is to be modified. Each appendix shall follow the following format:

Appendix _____

1. SCOPE. This appendix establishes the requirement for one item of equipment from the government inventory identified as (insert nomenclature, specification number and date, and other identifying data) for the (insert system/configuration nomenclature).

2. APPLICABLE DOCUMENTS.

3. REQUIREMENTS. (only when requirements are not contained or are over and above those in the specification for the inventory item).

4. QUALITY ASSURANCE.

4.1 Qualification (only when tests are required which are over and above those in the inventory item specification).

4.2 Receiving tests PREPARATION FOR DELIVERY

Information Handling Services, 1999
August 11, 1999 06:36:18

9003329 0007978 929

(THIS PAGE INTENTIONALLY LEFT BLANK)

Information Handling Services, 1999
August 11, 1999 06:36:18

APPENDIX VI

60. DOCUMENT AND ITEM IDENTIFICATION, NUMBERING AND MARKING

60.1 Purpose and scope. This appendix establishes the numbers to be used for identifying documents and physical items in order to achieve configuration traceability for equipment, components, computer software, facility sites, and spares.

60.1.1 Identification numbers to be used for configuration management are as follows:

a. Specification or standard number

b. Configuration Item Identification Number for hardware, or the software inventory number, for the CSCI, based on the agreed to software inventory numbering system.

c. Serial number (or lot number)

d. Drawing and part number

e. Change identification numbers:

(1) Specification Change Notice (SCN)

(2) Notice of Revision (NOR)

(3) Engineering Change Proposal (ECP)

(4) Request for deviation/waiver

f. Code identification (CAGE)

g. Registration number (when specified in lieu of serial number)

h. Program management code (when identified)

i. Type, series, model designator.

60.1.2 Examples of identification numbers which are not normally used in configuration management are as follows:

a. Production line number

Information Handling Services, 1999
August 11, 1999 06:36:18

b. Synthetic part number

c. Material codes

d. Federal Stock Number (FSN) (when specified)

e. Version Description Document number.

60.1.3 Applicability. This appendix applies to the configuration identification and marking of each configuration item and each of its components requiring configuration control which are accepted by the procuring activity for systems/configuration item programs or for follow-on spares procurement. Each contractor to the procuring activity shall be responsible for compliance by his subcontractors, vendors, and suppliers to the extent his subcontractors, vendors, and suppliers assign and control standard configuration identification numbers. Incorporation of this appendix in a contract shall not be construed as directing or permitting the contractor to change an existing identification for a system, HWCI (or part thereof),. material, process, computer software or data base, or document specifying any of the foregoing if a past association with any Government agency has caused the existing identification to be entered into Government technical data or supply records.

60.2 General requirements.

60.2.1 Contractor responsibility. The contractor shall assign and control configuration identification numbers in accordance with this appendix without further approval of the procuring activity.

60.2.2 Numbers assigned by other design activities. Where the configuration item incorporates the design of a subcontractor, vendor, or supplier, the contractor shall use the configuration identification numbers assigned by these design activities without change except as specifically authorized by DOD-STD-100 (e.g., source control drawings).

60.3 Detail requirements.

60.3.1 Specification numbers. Specification identification numbers, specification change notices, and specification revisions shall be assigned as prescribed in FAA-STD-005 and MIL-STD-482.

60.3.2 Configuration item identification numbers.

60.3.2.1 The design activity and the manufacturer of the configuration item shall be identified by manufacturing code identification numbers taken from Handbook H4/H8.

Information Handling Services, 1999
August 11, 1999 06:36:18

60.3.2.2 All discrete parts, assemblies, and units shall be identified by part numbers in accordance with DOD-STD-100.

60.3.2.3 A family of like units of a configuration item that individually satisfies prescribed functional requirements shall be identified by an unchanging base number such as a configuration item identification number, or a type-model-series designator. This number:

a. Shall establish a base for serializing individual units of a configuration item

b. Shall not change when the unit is modified, even though the interchangeability of units within the family is affected

c. Shall remain the same even though the configuration item may have more than one application or may be reprocured through different contractors

d. Shall be composed of seven digits of alpha-numeric characters. (Note: On privately developed configuration items where the number exceeds seven digits, the last seven digits of the number will be utilized for EDP application.)

60.3.3 Serialization. Serialization shall be accomplished to the Line Replaceable Unit (LRU). See FAA-G-2100 for details on serialization.

60.3.4 Change identification numbers. Notice of Revisions (NOR), requests for deviations/waivers, and engineering change proposals identification. numbers are prescribed in MIL-STD-480.

60.3.5 Identification of physical configuration items. Configuration item identification numbers for configuration management shall be affixed or marked on physical configuration items in accordance with FAA-G-2100.

60.3.6 Reuse of configuration item serial numbers. Configuration item serial numbers assigned to the original configuration item apply to all follow-on configuration items (within this contract or under separate contract) even though a change affecting interchangeability may require a part number change of the configuration item. Configuration item serial numbers, once assigned, shall not be reissued on follow-on procurements for the same configuration item.

60.3.7 Drawing numbers. Drawing numbers and drawing change identification shall be assigned in accordance with DOD-STD-100.

Information Handling Services, 1999
August 11, 1999 06:36:18

9003329 0007982 35T

(THIS PAGE INTENTIONALLY LEFT BLANK)

Information Handling Services, 1999
August 11, 1999 06:36:18

APPENDIX VII

70. ENGINEERING RELEASE RECORDS AND CORRELATION OF MANUFACTURED PRODUCTS

70.1 Purpose. This appendix establishes the minimum requirements for achieving proper relationship between engineering/manufacturing data and manufactured configuration items.

70.2 Scope. The criteria of this appendix applies to the contractor's engineering release system pertaining to:

a. Elements of data required

b. Production release functional capabilities

c. Release of engineering changes

d. Field release functional capabilities.

70.2.1 After the initial release of data, criteria are set forth for the control of incorporating Class I engineering changes in CIs. The internal control system of the contractor shall be capable of:

a. Reconciling engineering work authorizations to contract requirements.

b. Verifying that released engineering and purchase orders are in accordance with contract requirements.

c. Assuring that engineering changes are incorporated into configuration items as required by the release engineering changes.

70.3 Applicability. The criteria of this appendix apply to all contracts requiring the preparation of engineering drawings and specifications for configuration items. The contractor shall be responsible for compliance by his subcontractors, vendors, and suppliers to the extent specified in paragraph 1.3 of this standard. An engineering release system complying with the intent of this appendix shall be implemented by the contractor for CSCIs to assure that the objectives of this appendix are met.

70.4 Engineering release requirements. The contractor shall prepare and maintain engineering release records in accordance with his formats and procedures, and the minimum requirements herein.

70.4.1 Elements of data required. The contractor's engineering release records shall contain the standard configuration identification numbers.

Information Handling Services, 1999
August 11, 1999 06:36:18

70.4.1.1 Configuration item (CI) elements.

a. CI number

b. CI serial numbers

c. Top assembly drawing number

d. CI specification identification number

70.4.1.2 Drawing elements.

a. Drawing number (including specification control source control drawing numbers)

b. Drawing title

c. Code identification number (CAGE)

d. Number of sheets

e. Date of release

f. Change letters

g. Date of change letter release

h. Ancillary document numbers (engineering change proposals, waivers, etc.)

70.4.1.3 Part number elements. The contractor's engineering release records for part number elements shall be standard configuration identification numbers:

a. Controlling drawing number

b. Part numbers released

70.4.2 Production release functional capabilities. To the extent that the contractor has detail design responsibility, the contractor's release function and documentation, including drawings and associated lists, shall be capable of determining the following released engineering requirements:

a. The composition of any part number at any level in terms of subordinate part numbers, except for standard parts.

Information Handling Services, 1999
August 11, 1999 06:36:18

b. All next higher (next assembly) part numbers of any part, except parts assembling into standard parts.

c. The composition of any configuration item (CI) in terms of part numbers and subordinate numbers.

d. The configuration item number and serial numbers (effectivity) on which any subordinate provisioned or to-be-provisioned part is used. This does not apply to subcontractors, vendors, and suppliers who are not producing configuration items.

e. Identification numbers which have been partially or completely released for any CI number and serial number as applicable.

f. The CI numbers and serial numbers which constitute effectivity of each engineering change.

g. The specification numbers or standard part numbers used within any non-standard part number.

h. The subcontractor, vendor, or supplier part numbers which have been assigned.

i. The contractor specification document, specification control drawing numbers, or source control drawing numbers association with any. subcontractor, vendor, or supplier part number.

70.4.3 Release of engineering changes. The contractor's release function and documentation shall be capable of identifying engineering changes and retaining the record of superseded configuration requirements, affecting items which have been formally accepted by the procuring activity. All engineering changes released for production incorporation shall be identified by identification numbers, and shall be completely released prior to formal acceptance of the CI where first installed. The configuration released for each CI at the time of its formal acceptance shall be retained in release records for the time required by retention-of-records requirements in the contract.

70.4.4 Field release functional capabilities. Engineering data defining formally accepted equipment which is under the jurisdiction of the contractor, of Government through testing, and which is progressing through testing or through activation programs, shall be maintained current with all field activity requirements and released as follows:

a. Requirements may be replaced by superseding requirements in the release records for units which are logistically supported by the contractor and which were accepted prior to the established product baseline (physical configuration audit).

Information Handling Services, 1999
August 11, 1999 06:36:18

b. Superseded requirements of the product baseline shall be retained as a reference release and superseding requirements added as a requirements release for all units of the CI which have been formally accepted or are under the jurisdiction of the contractor. Superseded requirements shall be retained in all release records until status accounting records indicate that superseded configurations no longer exist.

c. Engineering changes to CIs which have been formally accepted by the procuring activity, and which are not under the jurisdiction of the contractor, shall be released for Government action.

70.4.5 Correlation of engineering changes with manufactured products. It is the objective that each engineering change approved by the procuring activity be incorporated in all units within one design, series or type, model, series of the CI affected. Complete verification of the production incorporation of engineering changes is required to assure that engineering changes directed were accomplished on specific items. Such verification is a requirement of the quality control system(s) to be implemented in accordance with the latest editions of FAA-STD-013, FAA-STD-016, and FAA-STD-018, whichever is a requirement of the contract. These standards also require demonstration that the FAA contractor satisfactorily controls the design, manufacture, and incorporation of engineering changes.

Information Handling Services, 1999
August 11, 1999 06:36:18

APPENDIX VIII

80. ENGINEERING CHANGES (EQUIPMENT)

80.1 Purpose. This appendix provides information for configuration control of engineering changes. MIL-STD-480 should be referenced for further information. These instructions pertain to all engineering changes to hardware. Engineering changes to computer software are covered in Appendix IX of this standard.

80.2 Scope. This appendix establishes unique provisions for engineering changes to the functional baseline as reflected in the system/segment or HWCI specification, the allocated baseline as reflected in the hardware development specifications, and the product baseline as reflected in the hardware product specifications. The baseline established in the contract is changed only by Class I ECPs approved by the procuring activity and incorporated in the contract by contract change documentation.

80.3 Requirement for engineering changes. The contractor shall not incorporate any engineering change in a configuration item as described in the configuration identification prescribed by the contract, unless request for an engineering change has been submitted to, and approved by FAA, as set forth herein. Contractual authorization will be required prior to the incorporation of an engineering change proposal (ECP) when affects cost, fee, schedule technical requirements, or training methodology.

80.3.1 Priorities of action. ECPs shall be classified as Emergency, Urgent, and Routine with approval periods as follows: Emergency - 24 hours; Urgent 15 calendar days; Routine - 30 calendar days. An engineering change may be expedited, if in the judgment of the contractor it requires immediate action. The contractor may initiate the ECP by Teletype, by telephone, or personal contact, to be followed by the contractor's written statement within 3 days. If the initial reaction by the addressee to the ECP is favorable, a formal ECP in accordance with this standard shall be submitted as soon as practicable, but not later than 30 days after the first communication. Verbal authorization for an emergency change shall be restricted to the FAA contracting officer.

80.3.2 Revision or correction. When an engineering change requires revision or correction, the contractor shall submit a revised ECP proposal with a new date, the original ECP number followed by "-R1". Subsequent revisions or corrections shall be identified as "-R2", "-R3", etc.

80.3.3 Coverage. A separate ECP shall be prepared for each engineering change. Unrelated engineering changes shall not be covered by the same ECP.

Information Handling Services, 1999
August 11, 1999 06:36:18

80.3.4 Engineering changes affecting fielded equipments. When engineering changes affect both equipments in production and equipments that are operational in the field, an electronic equipment modification order in accordance with appendix 6 and/or appendix 7 of the latest edition of FAA Order 1320.33 shall be submitted with the ECP.

80.3.5 Submittal. The contractor shall provide the FAA technical officer with a minimum of four (4) copies unless otherwise specified in the contract. Supporting technical documentation shall be attached to each ECP. An additional copy shall be submitted to the resident Quality Reliability Officer (QRO), if assigned.

80.3.6 Approval/disapproval. The approval or disapproval of an ECP will be achieved by:

a. The signature on the ECP form of an authorized representative of the government activity, or of a review activity delegated such authority, and by the return of approved or disapproved copies to the contractor.

b. Contractual authorization when the ECP affects the contract.

80.4 ECP classification. ECPs are classified as either Class I or Class II, as defined in 80.4.1 and 80.4.2. When the contractor has established the purpose and necessity for an ECP, assignment will be made to the appropriate ECP classification. If the contract document requires the use of the ECP Long Form defined in this appendix, the contractor must use the long form for all engineering changes requiring Government concurrence in classification or approval, regardless of classification. If the contract document does not require use of the long form, the contractor may use an original form where an engineering change proposal is submitted to the Government for concurrence in classification only. The Government may concur or nonconcur with the originator's ECP classification.

80.4.1 Class I engineering change proposals. An ECP shall be designated as Class I when one or more of the following factors are affected:

a. The functional or allocated configuration identification

b. The product configuration identification as contractually specified

c. Technical requirements below those contained in the product configuration identification, including referenced drawings, as contractually specified, for example:

(1) Performance outside stated tolerance

(2) Reliability and maintainability outside stated tolerance

Information Handling Services, 1999
August 11, 1999 06:36:18

(3) Weight, balance, moment of inertia

(4) Interface characteristics

d. Nontechnical contractual provisions:

(1) Fee

(2) Cost

(3) Schedules

e. Other factors

(1) Government Furnished Equipment (GFE)

(2) Safety

(3) Electromagnetic characteristics

(4) Operational tests or maintenance computer programs

(5) Compatibility with support equipment, trainers or training equipment

(6) Configuration to the extent that retrofit action would be taken

(7) Delivered operation or maintenance manuals for which adequate change/revision funding is not available on existing contracts

(8) Preset adjustments or schedules affecting operating limits or performance to such extent as to require assignment of a new identification number

(9) Interchangeability, substitutability, or replaceability, as applied to configuration items and to all subassemblies and parts of repairable configuration items but excluding the pieces and parts of nonrepairable subassemblies

(10) Sources of configuration items or repairable items at any level defined by source control drawings.

80.4.2 Class II engineering change proposal. An engineering change proposal will be designated as a Class II ECP when it does not fall within the classification of Class I engineering change proposal as defined in this appendix. Examples of a Class II engineering change proposals are: a change in documentation only, such as correction or errors; addition of clarifying

Information Handling Services, 1999
August 11, 1999 06:36:18

notes or illustrations; or a change in hardware which does not affect any factor in paragraph 80.4.1 of this appendix. When two or more contractors are producing items to the same mandatory detail drawings, an engineering change which is Class II to the originator may be Class I in its impact on other contractors. Therefore, it is imperative that all engineering changes be fully coordinated with all affected parties.

80.5 Multiple HWCI ECPs. When more than one HWCI is affected by a change under the cognizance of a single contracting agency, a single ECP with separate dash numbers for each HWCI may be used in lieu of separate ECPs for each HWCI.

80.6 Deviation. A contractor may request authority before the fact to temporarily deviate from the mandatory requirements of the configuration identification. Items shall not be delivered that incorporate a known departure from documentation unless a request for a deviation has been processed in accordance with this standard, or unless otherwise permitted contractually. At the option of the Government, an engineering change proposal (ECP) may be converted to a deviation or a deviation may be converted to an ECP.

80.6.1 Significant factors. The following significant factors must be considered in the evaluation of a deviation:

a. Health

b. Safety

c. Item performance

d. Interchangeability, reliability, or maintainability of the item or its repairable parts

e. Effect on operation/operational acceptability

f. Weight and size

g. Appearance

h. Training effectiveness and efficiency

i. Cost to the Government

j. Schedule impact.

Information Handling Services, 1999
August 11, 1999 06:36:18

80.6.2 Restrictions on deviations. Deviations adversely affecting health or safety shall not be submitted. Requested deviations which would affect service, operation, or maintenance should not be submitted or authorized as deviations. Such effects, if approved, should be covered by appropriate revisions in drawings and technical manuals. Therefore, they should be requested and processed as engineering change proposals.

80.6.3 Submittal. Each request for deviation with supplemental drawings and information enclosed shall be submitted to the FAA Contracting Officer with copies to the resident Quality and Reliability Officer (QRO).

80.6.4 Review and approval. Unless otherwise specified in the contract, deviations which do to affect any factor listed in paragraph 80.6.1 shall be approved or disapproved by the FAA Contracting Officer. Review and approval of deviations may be delegated to the resident QRO.

80.7 Waivers. A contractor shall not deliver a manufactured item to the Government that does not conform to the configuration identification, unless a waiver has been processed and authorized in accordance with this standard, or unless permitted contractually. Supplies or services which do not conform in all respects to the contract requirements shall be rejected.

80.7.1 Restrictions on waivers. Waivers adversely affecting health and safety shall not be authorized.

80.7.2 Submittal. Each request for waiver with supplemental drawings and information enclosed shall be submitted to the FAA Contracting Officer With copies to the QRO. All waivers shall be submitted on DD Form 1694. Preparation of the waiver will be in accordance with MIL-STD-480, Appendix C. Paragraph 50.1.9.1 (block 9a, Weapon System code or designation) does not apply. The contractor requesting a waiver may subject to providing consideration to the government in accordance with the procedures specified in the contract.

80.7.3 Review and approval. Unless otherwise specified in the contract, waivers which do not affect any factor listed in paragraph 80.6.1 shall be approved by the FAA Contracting Officer. Review and approval of waivers may be delegated to the resident QRO.

80.8 Engineering change proposals, deviations, and waivers. A flow chart for the processing of ECPs, deviations, and waivers is shown in figure 8.

Information Handling Services, 1999
August 11, 1999 06:36:18

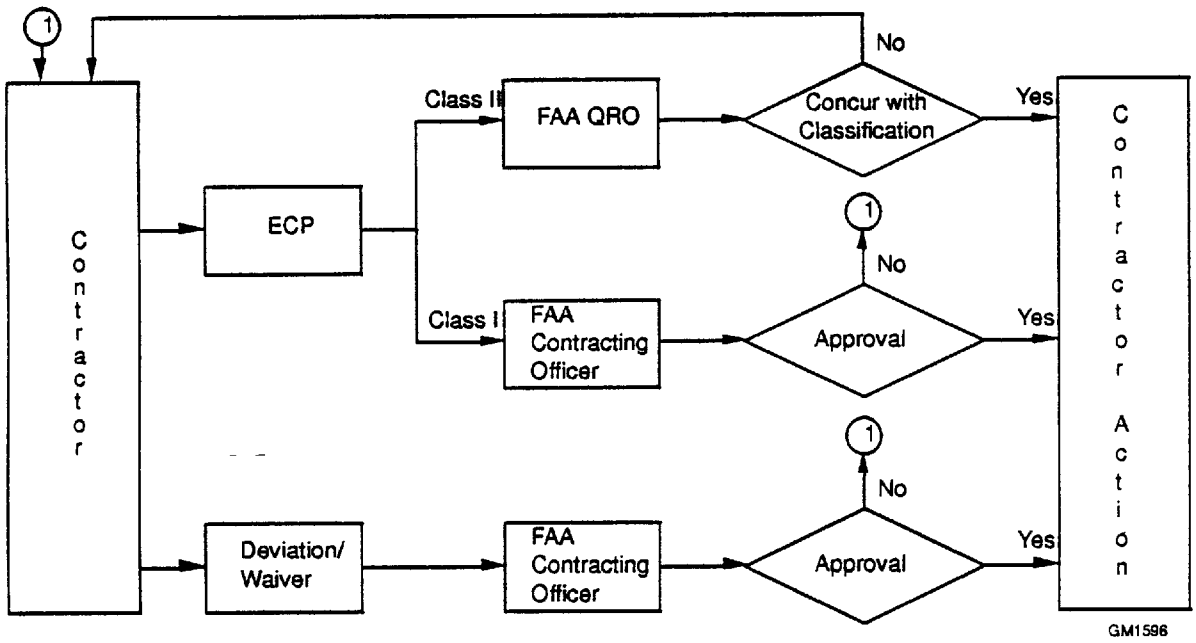

Figure 8 Flow Chart for Engineering Change Proposal, Deviations and Waivers

Information Handling Services, 1999
August 11, 1999 06:36:18

APPENDIX IX

90. ENGINEERING CHANGES (COMPUTER SOFTWARE)

90.1 Purpose. This appendix describes the requirements necessary to provide uniform procedures for preparing, formatting, and processing changes to Computer Software Configuration Items (CSCIs).

90.2 Scope. This appendix establishes the requirements for configuration control that are unique to computer software. It:

a. Supplements MIL-STD-480.

b. Replaces MIL-STD-480 paragraph 5.1 titled "Class I engineering change", (paragraph 5.1.1 titled "Class I engineering change to a privately developed item", is excluded) and paragraph 5.2 titled "Class II-engineering change".

c. Provides guidance in preparing the DD 1692 series of forms for engineering changes to CSCIs. Hardware oriented requirements of MIL-STD-480 pertaining to engineering drawings, production/manufacturing, and logistics support do not apply to CSCIs. Other requirements of MIL-STD-480 which have not been supplemented by this appendix shall remain as contractually invoked.

90.3 Applicability. The requirements of this appendix are applicable to all contracts involving computer software CIs during the acquisition and operation phases of CSCI design, development, test and updating, and modifications. Each contractor to the Government shall be responsible for his compliance with this appendix as well as the compliance of his subcontractors, vendors and suppliers to the extent that they are involved in preparing, formatting, and processing engineering change proposals to computer software CIs for which the prime contractor is responsible.

90.4 Multiple HWCI/CSCI ECPs. When more than one HWCI/CSCI is affected by a change under the cognizance of a single procuring activity, a single ECP with separate dash numbers for each HWCI/CSCI may be used in lieu of separate ECPs for each HWCI/CSCI.

90.5 Classification. The originator of an engineering change to a CSCI shall classify the change as Class I or Class II. Assuming that its purpose and necessity have been established, each ECP shall be assigned the appropriate classification by the originator in accordance with the definitions in this appendix (paragraph 90.6). Disagreements as to classification of computer software changes shall be processed in accordance with the procedures set forth in MIL-STD-480.

Information Handling Services, 1999
August 11, 1999 06:36:18

90.6 Definition of classification. Paragraphs 80.4.1 and 80.4.2 are replaced by the following wit respect to Class I and Class II computer software changes.

90.6.1 Class I change. A computer software change shall be classified Class I when one or more of the factors listed (subparagraphs a, b, c, d, or e) below is affected:

a. The Functional Configuration Identification (FCI) or Allocated Configuration Identification (ACI).

b. Product Configuration Identification (PCI) as contractually specified.

c. Technical requirements below contained in the PCI as contractually specified, including referenced drawings and specifications.

(1) Performance, including reliability, maintainability or survivability, correctness, efficiency, integrity, testability, usability, outside stated tolerance.

(2) Interface characteristics (external to the CSCI).

d. Non-technical contractual provisions:

(1) Fee

(2) Incentives

(3) Cost to the Government

(4) Schedules

(5) Guarantees or deliveries.

e. Other factors:

(1) Government Furnished Property (GFP)

(2) Safety

(3) Other computer software

(4) Compatibility with support resources, trainers or training devices/equipment

(5) Delivered operation and maintenance manuals for which adequate change/revision funding is not on existing contracts

Information Handling Services, 1999
August 11, 1999 06:36:18

(6) Preset adjustments or schedules affecting operating limits or performance to such extent as to require assignment of a new identification number

(7) Skills, manning, training, biomedical factors or human engineering design.

90.6.2 Class II change. A computer software change shall be classified Class II when it does not fall within the definition of a Class I change in paragraph 90.6.1 above. Examples of a Class II change are (a) a change in documentation only (e.g., correction of errors, maintenance type code corrections which do not affect program logic, design or mathematical formulation or addition of clarifying notes), or (b) other changes of a minor nature within categories specifically defined by the procuring activity in a given procurement (e.g., adaptation data or recompiling within specified limits).

90.6.3 Class I, ECP types. The type of Class I ECP application to CSCIs shall be used in accordance with the following guidelines. A preliminary ECP may be submitted prior to availability for review of the information necessary to support a formal ECP in accordance with MIL-STD-480. A formal ECP, shall contain an assigned SCN number and sufficient definition of a proposed change and its impact, including schedule and cost data, to support formal approval and contractual authorization. Definition of the proposed change provided with a formal ECP need not normally include exact changes in CSCI specification data to the degree that such data represents products of the total computer software change implementation-process.

90.7 Instructions for the preparation of ECP forms.

a. The contractor shall use the ECP form and format illustrated in MIL-STD-480 for the preparation of all Class I ECP to CSCIs.

b. Instructions for ECP preparation contained in Appendix A to MIL-STD-480 shall apply except as noted herein.

c. ECPs shall be submitted in the uniform format specified herein for all proposed changes;

(1) To the functional configuration identification and allocated configuration identification both before and after establishment of a product baseline for the CSCI, and,

(2) To the product configuration identification after the product baseline has been established.

90.7.1 Engineering Change Proposal DD Form 1692, Page 1.

Information Handling Services, 1999
August 11, 1999 06:36:18

90.7.2 Block 2, ECP Class. Enter I or II for the applicable ECP Class as defined in 90.6.1 and 90.6.2 above.

90.7.3 Block 5, ECP designation. Instructions contained in paragraph 50.1.5 of MIL-STD-480 titled Block 5. ECP Designation shall apply, except for modified subparagraphs (a) and (b) as noted below:

a. Model/type - enter the CSCI identification.

b. Enter either a "P" for preliminary or "F" for formal, in accordance with 90.6.3 herein.

90.7.4 Block 8, Specifications afected-test plans. The data items to be examined by the contractor for identification in this block shall include, at the minimum, all listed on the Contract Data Requirements List (CDRL) for the CSCI development contract, as well as previously-delivered handbooks and user manuals associated with the CSCI. This entry shall identify each data item affected by the proposed change, the nature of the effect, and any relevant impact on schedule or delivery of the item.

90.7.5 Block 9, Drawings affected. List all drawings affected by the change.

90.7.6 Block 14, In production. This block is not applicable to CSCIs.

90.7.7 Block 15, Lowest assembly affected. Enter the names of Computer Software Components (CSCs) or units affected.

90.7.8 Block 16, Description of change. Enter the identification and revision status designator of each CSC and unit identified in Block 14.

90.7.9 Block 18, Equipment Serial No. Covered. Identify, by CSCI version number, the version of the CSCI into which the change will be incorporated. Enter the date(s) of the SCN(s). In the ECP submittal, the contractor shall indicate the new version number in Block 18. If the impact of the ECP merits the issuance of a new version of the CSCI, Block 18 of the ECP submittal shall also include a recommendation to this effect. Serial numbers may be used in lieu of version numbers upon agreement of the procuring activity.

90.7.10 Block 19, Effect on Delivery Schedule. Identify effect on delivery schedule.

90.7.11 Block 20, Retrofit. This block may or may not apply to CSCIs. However, if the CSCI change is part of a larger hardware/equipment change and incorporation of the CSCI change is per a hardware retrofit schedule, that information will be included here either directly or by reference.

Information Handling Services, 1999
August 11, 1999 06:36:18

90.7.12 Block 21, Estimated cost/savings under contract. Enter a dollar estimate of costs (contract funding), either increased or decreased, which will result if the change is approved by the Government. If the contractor at the time of submission of the formal-ECP has available the firm cost proposal, this proposal shall be submitted and shall be accompanied by the appropriate cost breakdown.

90.8 Engineering Change Proposal DD For 1692-1, page 2, Effects on functional/allocated configuration identification.

90.8.1 Block 29, Effects on employment, integrated logistics support, training, operational effectiveness, or software. The contractor shall enter the following information as applicable to the phase of CSCI development/operation at the time of ECP submission:

a. Describe effects of the proposed change on personnel and training requirements, including any changes or the effects on the operability or support of the system.

b. Identify any effect on contract engineering technical services that increases the scope or dollar limitation established in the contract.

c. Identify any required changes to the data base parameters or values, or to data base management procedures.

d. Identify and explain any estimated effects of the proposed change on acceptable computer operating time and cycle time utilization.

e. Provide an estimate of the net effect on computer software storage.

f. Identify and explain any other relevant impact of the proposed change on utilization of the system.

90.8.2 Block 31, Developmental requirements and status. The contractor shall identify in this block the schedule sequence of computer software design/development/test activities which will be required to implement the proposed change. In the case of ECPs which are initiated following the completion of significant preliminary design of the CSCI, or of a new CSCI version, specific information shall be entered in this block to identify significant requirements for computer software redesign, re-assembly, re-compiling, recoding, retest, special installation, adaptation, checkout, or live environment testing, as applicable, and to identify the specific impact of these factors on existing schedules for completion.

90.9 Engineering Change Proposal DD Form 1692-2, page 3, Effects on product configuration identification. Specific terms of information to be reported on DD Form 1692-2, as specified in the instructions under Section 50.3 of Appendix A to MIL-STD-480 are either already provided on the forms 1692 and 1692-1 or do not readily apply to computer software. In general, factors associated

Information Handling Services, 1999
August 11, 1999 06:36:18

with the use and operation of CSCIs depend more directly on characteristics defined at the level of the requirements specification (Software Requirements Specification, and if applicable Interface Requirements Specification(s)) than on those defined at the product configuration level; and factors of computer programming support are rarely, if ever, affected by modifications in the CSCI product configuration. However, the contractor shall review these factors and comply with the intent of Blocks 37, 38, 42, 43, 44, and 46.

90.10 Engineering Change Proposal DD Form 1692-3, page 4, Estimated net total cost impact. DD form 1692-3 shall not be used with ECPs to CSCIs. Net total cost estimates shall be based on all impact factors identified in the relevant blocks of DD Forms 1692 and 1692-1 and shall be reported as specified in 90.7.12 herein.

90.11 Engineering Change Proposal, Page 5, Cost savings summary. DD form 1692-4 shall not apply in the case where all related ECPs being summarized refer to computer software changes only. When the related ECPs include changes to HWCIs, the form shall be used in accordance with instructions contained in Section 50.5 of Appendix A to MIL-STD-480.

90.12 Engineering Change Proposal DD Form 1692-5, Page 6, Milestone chart. DD Form 1692-5 shall not be used with ECPs for CSCIs. The significant scheduling information associated with computer software changes is normally that information relating to milestones in the change analysis/design/ development/test process (e.g., as required in block 31 of DD Form 1692-1; see 90.8.2 herein). Schedule information for CSCI changes shall be provided, listing significant developmental milestones associated with the change, and representing events by the use of standard milestone chart symbols.

90.13 Instructions for preparation of Notice of Revision (NOR) DD For 1695.

90.13.1 Blocks 1 - 9. A NOR is applicable to a CSCI when it was not specifically developed for a given system (commercially available) but is utilized with the system. For example, maintenance/ diagnostic and utility programs that are provided with a given general purpose computer and must be modified/changed to operate within the allocated systems environment. The NOR would provide a record of change to the commercially available software for present and future use.

Information Handling Services, 1999
August 11, 1999 06:36:18

APPENDIX X

100. REPORTING THE ACCOMPLISHMENT OF UPDATING/RETROFIT CHANGES

100.1 Purpose. This appendix applies to system, computer software, and equipment contractors responsible for releasing engineering and affecting ECP accomplishments of approved Class I changes (MIL-STD-480). These data will be used by the contractor to update the configuration status accounting reports that he is producing for the procuring activity.

100.2 Scope. Contractors shall record and report the accomplishment of Class I changes (MIL-STD-480) for system; computer software, equipment, and spares. Figure 9 is a suggested format for use in recording such information. This format shall not be used to report in-production changes. After preparation, the contractor shall forward the original and all copies with retrofit kit or modification instructions to the procuring activity or contractor having custody of the configuration item affected. Integrating contractors shall prepare an original and two copies of the report. In instances where a change to a configuration item must be accomplished concurrently with a change approved for associate contractor configuration item, an original and three copies shall be prepared.

100.3 Applicability. Each contractor to the procuring activity shall be responsible for compliance by his subcontractors, vendors, and suppliers to the extent specified in 1.3 of this standard.

100.3.1 Procuring activity or contractors having custody of the configuration items affected shall complete copies of the report upon accomplishment of the approved change. The completed original will be retained for filing with the equipment records. One copy shall be forwarded to the procuring activity configuration management organization, if required another copy shall be forwarded to the associate contractor's configuration management organization, and the third copy shall be forwarded to the contractor preparing configuration status accounting reports for the procuring activity. Processing of these completed reports shall be accomplished as they occur.

100.4 Preparation instructions. All entries on the report, with the exception of the signature blocks, shall be typewritten whenever possible. If a typewriter is not available, the entries shall be inserted with permanent black, blue, or blue-black ink. Signatures shall be made with permanent black or blue-black ink.

100.4.1 Format and entries.

a. Block 1 - location - Enter the location where the change shall be accomplished.

Information Handling Services, 1999
August 11, 1999 06:36:18

Updating/Retrofit Changes Installation Completion Notification		
(1) Location		
(2) Identification of Change ECP No. _____ Data Code No. _____	(3) Config Item Affected Config Item No. _____ Serial No. _____ Part No. _____ Version No. _____	(4) Date
(5) Installation Fully Completed ❑	Partially Completed ❑ (If Partially Completed, Explain)	
(6) Problems Encountered During Installation		
(7) Proposed Solution		
Distribution to: Contract CMO ❑ Procuring Activity CMO ❑ Contractor/Government ❑ Record Center Office ❑	Installation Accomplished by: _____ Signature Required Name of Contractor Installation Agency Installation Inspected by: _____ Signature Required Name of Government Inspection Organization	

Figure 9. (Sample Form) Installation Completion Notice

Information Handling Services, 1999
August 11, 1999 06:36:18

b. Block 2 - identification of change - Enter ECP number and Data Code Number, when applicable.

c. Block 3 - configuration item affected - Enter all applicable numbers

d. Block 4 - date - Enter date of installation

e. Block 5 - check appropriate square and explain when necessary (see figure 9)

f. Block 6 - problems encountered during installation - Make entry when appropriate

g. Block 7 - proposed solution - Make appropriate entry

h. Enter "X" in applicable "Distribution To" blocks

i. Sign and record "Name of Contractor Installation Agency" under "Installation Accomplished By".

j. Sign and record "Name of Government Inspection Organization" under "Installation Inspected By".

Information Handling Services, 1999
August 11, 1999 06:36:18

9003329 0008002 846

(THIS PAGE INTENTIONALLY LEFT BLANK)

Information Handling Services, 1999
August 11, 1999 06:36:18

APPENDIX XI

110. SPECIFICATION CHANGE/MAINTENANCE

110.1 Purpose. This appendix provides amplified instructions for the preparation of a proposed specification change notice (SCN), an approved specification change notice, specification change pages, specification revisions, and amendments as set forth in FAA-STD-005. For computer software specification maintenance, see Appendix XII.

110.2 Scope. The proposed specification change notice (SCN) identifies a proposed change to a contractually applicable specification. After the proposed SCN is contractually accepted, an approved SCN provides a record of the change and the associated engineering change proposal (ECP). The proposed specification change notice identifies exactly the proposed changes to the specification contents. The specification revision is a complete revision of the specification and shall incorporate all previously contractually approved changes.

110.3 Applicability. Each contractor shall be responsible for compliance by his contractors, vendors, and suppliers to the extent specified in paragraph 1.3 of this standard.

110.4 Distribution of SCN. Proposed specification changes notices shall not be distributed to other activities on the specification distribution list until the SCN has been approved by the CCB and provided to the procuring activity for contract modification.

110.5 Approved SCN. The approved SCN shall be inserted into the specification immediately in front of section 1 following the title page. The previously approved SCN shall be removed when the latest approved SCN is inserted in the specification.

110.6 Preparation of the SCN. By definition, all Class I engineering change proposals (ECPs) require a specification change notice (SCN). Errata of a minor nature (such as typographical errors, punctuation, etc.) normally shall not be corrected, except as an incidental part of the next technically required ECP and accompanying proposed SCN. For those ECPs that do not affect the specification contents and affect the hardware only, the approved SCN shall indicate only that the SCN has been added to the ECP for change traceability. Figure 10 is a sample SCN form.

110.6.1 Block completion. An SCN shall initially be submitted complete, except for Block 10. If all data cannot be included within the space allocated on the forms, use attachments as necessary, with appropriate references in the blocks. The contractor shall enter the contract change order, or equivalent contract approving authority number, in Block 10 when

Information Handling Services, 1999
August 11, 1999 06:36:18

Specification Change Notice (SCN)

1. Originator Name and Address	2. ❑ Proposed	3. Code Ident	4. Spec No.
	❑ Approved	5. Code Ident	6. SCN No.

7. System Designation	8. Related ECP/NCP No.	9. Contract No.	10. Procuring Activity

11. Configuration Item Nomenclature	12. Effectivity

This notice informs recipients that the specification identified by the number (and revision letter) shown in block 4 has been changed. The pages changed by this SCN (being those furnished herewith) carry the same date as this SCN. The page numbers and dates listed below in the summary of changed pages, combined with nonlisted pages of the original issue of the revision shown in block 4, constitute the current version of this specification.

13. SCN No.	14. Pages Changed (Indicate Deletions)	S*	A*	15. Date

16. Technical Concurrence	17. Date

*"S" Indicates Supercedes Earlier Page; "A" Indicates Added Page

Figure 10. Specification Change Notice

Information Handling Services, 1999
August 11, 1999 06:36:18

this authority is officially received and prior to inclusion of the SCN in the specification to which it applies. The contractor shall assure that approved SCNs, including changes pages, are in complete accord with the contractual authority which approved the SCN prior to inclusion in the specification. The contractor shall then distribute those SCNs in accordance with the specification distribution list contained within the contract.

110.6.2 Supersession. When a contractor is requested to resubmit a proposed SCN, the resubmitted SCN shall retain the same SCN number with a new date. An SCN shall be revised and resubmitted only in conjunction with a revision to an ECP. When an SCN is revised and resubmitted, the resubmitted SCN shall show that the previous dated SCN has been superseded.

110.6.3 Proposed/approved SCNs. Proposed/approved SCNs shall be identified by appropriate marking in Block 2. Approved SCNs shall be marked by completion of Blocks 2 and 10, citing the contractual authority.

110.6.4 Date prepared (upper right-hand corner). This is date of contractor preparation and shall be the date on the specification change pages.

110.6.5 Effectivity (Block 12). Block 12 shall be completed to show all the configuration item serial numbers affected by the specification change notice/engineering change proposal (SCN/ECP).

110.6.6 Summary of change pages (Block 14). In addition to the change pages, enter the related ECP number of each SCN and the date appearing on the change pages of that SCN.

110.6.7 Date (Block 15). This date shall be the approval date of the SCN. If the SCN has not been approved, leave the date blank.

110.6.8 Technical concurrence (Block 16). The Federal Aviation Administration (FAA) technical officer will review the SCN and will sign and date in this block when the request is considered technically acceptable.

110.7 Specification change page. The specification change page(s) shall be attached to the SCN and shall constitute an integral part of the SCN. Updated and reissued pages shall be complete reprints of pages, suitable for incorporation by removal of old pages and insertion of new pages. All portions affected by the change shall be indicated by a vertical line in the right-hand margin. Proposed change pages shall be printed on colored paper.

110.7.1 Proposed specification change pages. When a proposed specification change page is used, the page shall reflect only the changes of that particular page; i.e., the paragraphs not being changed need not be incorporated on the page.

Information Handling Services, 1999
August 11, 1999 06:36:18

110.8 Specification revisions. A revision is defined as the reissue of a specification with all the SCNs incorporated in the body of the specification. A specification shall not be revised without specific approval of the procuring activity. The procuring activity will establish a convenient cutoff point, oriented to a production article number or change in baseline. The specification revision shall incorporate the information identified on the latest approved specification change notice. (See paragraph, 3.4.1, FAA-STD-005.)

110.9 Superseded specification. The issue of the specification superseded by the revised specification shall be retained intact with all specification change pages and SCNs by the custodian to provide complete continuity of all previous changes.

110.10 Configuration item development record. The configuration item development record provides status information on the development progress for each configuration item of the system as reflected by specification audits and reviews. The configuration item development for each CI, which is of new design, shall be assembled and maintained in a log. The log serves as an index of all configuration items of the system which are of new design, and records significant program actions. The log may be prepared by the integrating or system engineering contractor designated by the procuring activity. Distribution of a contractor-prepared log will be as specified by the procuring activity. The initial issue of the log shall include a record of all specifications for items of new design which are part of the functional or allocated baseline. As requirements for additional new design items are established, a record shall be added for each specification. Each configuration item development record contains information which may be included in configuration status accounting records.

110.10.1 Preparation of the configuration item development record, part 1. This part of the record shall be prepared in a format essentially as shown in figure 11. The following shall be provided:

a. Block 1. - Enter the title of the specification (the title of the specification shall be the same as the nomenclature of the configuration item).

b. Block 2. - Enter the date on which the procuring activity authenticated the specification.

c. Block 3. - Enter configuration item identification.

d. Block 4. - Configuration item part number. (Not applicable to CSCIs).

e. Block 5. - Enter the date scheduled by the contractor for the preliminary design review (PDR) for the CI. Enter the date followed by a "C" to indicate when the PDR has been completed.

Information Handling Services, 1999
August 11, 1999 06:36:18

Configuration Item Development Record – Part 1	
Nomenclature	
Development Specification Number and Date **12345A 21 Sept 86** Authentication Date **27 Oct 86**	
Configuration Item Identification	
Configuration Item Part Number	
Preliminary Design Review Scheduled Date: **10 Jan 87** **11 Jan 87c**	Critical Design Review Scheduled Date: **11 Apr 87** **14 Apr 87c**
Functional Configuration Audit–Scheduled Date: **11 July 87** **12 July 87c**	Production Specification Scheduled Submittal Date: **1 Aug 87** **1 Aug 87c**
Physical Configuration Audit – Scheduled Date: **13 Sept 87** **15 Sept 87c**	
Configuration Item Qualification Scheduled Date: **10 Oct 87** **10 Oct 87c**	
Product Specification Scheduled Authentication Date: **17 Oct 87** **17 Oct 87c**	
Configuration Item Formal Qualification Certification Date: **25 Oct 87**	
Qualification Test Report	
Contractor	Contract No.

Figure 11. Sample Configuration Item Development Record – Part 1

Information Handling Services, 1999
August 11, 1999 06:36:18

f. Block 6. Enter the date scheduled by the contractor for the functional configuration audit (FCA) for the CI. Enter the date followed by "C" to indicate when the FCA has been completed.

g. Block 7. Enter the date scheduled by the contractor for the critical design review (CDR) for the CI. Enter the date followed by a "C" to indicate when the CDR has been completed.

h. Block 8. Enter the date scheduled for submittal of the product specification for the configuration item. Enter the date followed by "C" to indicate action completed.

i. Block 9. Enter the date scheduled for the physical configuration audit. Enter a "C" after the date to indicate the PCA has been completed.

j. Block 10. Enter the date scheduled for completion of formal qualification of the CI to specific requirements. Enter the date followed by a "C" to indicate action completed.

k. Block 11. Enter the date scheduled for authentication of product specification. Enter the date followed by a "C" to indicate action complete.

m. Block 12. Enter the date of acceptance by the Procuring activity of the certified qualification of the configuration item.

n. Block 13. Enter the identity of the test report/documentation which sets forth results of the qualification tests of the configuration item.

o. Block 14. Enter the name of the contractor responsible for the design/manufacture of the configuration item.

p. Block 15. Enter the contract number under which the development and qualification of the configuration item is accomplished.

110.10.2 Preparation of the configuration development record - part 2. This part of the record, when applicable, shall be prepared in a format essentially as shown on figure 12. The following information shall be provided:

a. Block 1. Enter the title of the specification.

b. Block 2. Development specification number and date.

Information Handling Services, 1999
August 11, 1999 06:36:18

Configuration Item Development Record – Part 2					
Nomenclature of Configuration Item					
Configuration Item Specification Number and Date:					
Configuration Item Specification		Impact of Changes on Related Configuration Items			
SCN	ECP	Specification/Document Title and Number	SCN	ECP	CONTR
Contractor			Contract No.		

Figure 12. Sample Configuration Item Development Record – Part 2

Information Handling Services, 1999
August 11, 1999 06:36:18

9003329 0008010 912

c. Block 3. Impact of changes on related configuration items. Whenever a change to the configuration item has an impact on related configuration items, the specification or document title and identification number of the affected configuration item shall be listed, with the specification change notice and engineering change proposal covering the changes to the affected item, and the name of the contractor who is responsible for the related configuration item.

Information Handling Services, 1999
August 11, 1999 06:36:18

APPENDIX XII

120. SPECIFICATION AND SUPPORT DOCUMENTATION MAINTENANCE, COMPUTER SOFTWARE

120.1 Purpose. This appendix provides amplified instructions for the preparation of Configuration control forms and documents that are used for reporting proposed and approved changes as well as current status and version(s) of CSCIs and their associated documentation. Also, requirements are included that pertain to the preparation timing of the various configuration control forms as they relate to Class I and Class II changes. Adherence to the requirements contained in this appendix will ensure that accurate records are developed, maintained, and disseminated for all CSCIs and for the status of all approved changes and change proposals throughout the acquisition phase. Change maintenance procedures are initiated for each specification, support document, or CSCI at the time of formal approval or acceptance of the specification or document by the procuring activity.

120.2 Scope. This appendix is divided into three sections. Paragraph 120.4 and associated subparagraphs contain general configuration control processing requirements pertaining to Class I and Class II CSCI changes. Subparagraphs of 120.5 contain instructions (or references to other sources that contain instructions) for the preparation of required configuration control documents. Finally, paragraph 120.6 contains information pertinent to specification and document revisions.

120.3 Applicability. This appendix is applicable for use during the acquisition and operational phases of computer software configuration item design, development, test and updating. Each contractor shall be responsible for compliance by subcontractors in accordance with paragraph 1.3 of this standard.

120.4 Configuration control change process. All changes to established functional, allocated, design or product baselines are Class I changes. Slight changes to documentation or other changes of a minor nature are Class II changes.

120.4.1 Class I change processing. Initial Class I change processing shall be performed in one or two steps. One step change processing is the simultaneous submission of the formal ECP and SCN with change pages for the appropriate specification(s) and document(s) by the contractor to the procuring activity Configuration Control Board (CCB). Two step change processing consists of the following steps:

a. Submission of an ECP by the contractor to the procuring activity CCB without SCN or change pages.

Information Handling Services, 1999
August 11, 1999 06:36:18

b. Submission of the ECP (as approved and possibly revised by the CCB), completed SCN and change pages to the appropriate specification(s) to the CCB.

120.4.1.1 Use of one step change processing. One step change processing shall apply to changes in the System/Segment Specification when an approved change to the Software Requirements Specification or Interface Requirements processing shall also be used for changes to the Software Requirements Specification or Interface Requirements Specification when the changes are of a minor nature to accomplish expansions or refinements, such as the elimination of "TBDs".

120.4.1.2 Use of two step change processing. Two step change processing shall be used for proposed major changes to the Software Requirements Specification and Interface Requirements Specification, such as the addition or deletion of significant capabilities, which may entail extensive system engineering analysis and result in changes to many pages of the specification. Two step change processing shall always apply to the Software Product Specification because the Software Product Specification defines the CSCI product as built, and therefore cannot be modified until the proposed ECP is approved (i.e., accomplishment of step one of the two step process precedes CSCI modification which in turn, precedes step two).

120.4.1.3 Post CCB approval-action. Upon approval of the ECP and the SCN(s) by the procuring activity CCB, for two step change processing the contractor shall complete the change process for the current modification by preparing the following items for distribution:

a. Specification change notice and specification change pages, for each affected specification.

b. Revised Computer Software Configuration Item.

c. Version Description Document related to the revised CSCI.

120.4.2 Class II change processing. Class II changes shall not require approval by the procuring activity CCB prior to implementation by the contractor.

120.4.2.1 Class II change report applicability. A Class II change report (CR) addresses either Software Requirements of an Interface Requirements Specification, or a Software Product Specification but never both the requirements and product specifications simultaneously. A class II CR is applicable to any delivered, maintainable document.

Information Handling Services, 1999
August 11, 1999 06:36:18

120.4.2.2 Reporting Class II changes. Class II changes shall be reported to the procuring activity by including a Class II CR as part of the next Class I ECP package for the same CSCI. Class II changes shall be included in SCNs issued to incorporate Class I changes. The SCN shall indicate the classification of each change specified therein.

120.4.2.3 Other Class II change processing requirements. All Class II changes installed in a CSCI shall be identified in the next issue of the Version Description Document by CR number, title, and issue date. Class II CRs shall also be reported in the computer software configuration index.

120.5 Configuration control documents and forms. Instructions (or references to sources that contain instructions) for the preparation of the configuration control documents are contained in the following subparagraphs:

120.5.1 Engineering Change Proposal (ECP)

120.5.2 Specification Change Notice (SCN)

120.5.3 Version Description Document (VDD)

120.5.4 Computer Software Configuration Index

120.5.5 Change Status Report

The forms and documents listed above shall be used to maintain specifications and support documentation, as applicable to any specific proposed or approved change(s). Requirements for applying the appropriate documents and forms for a specific change are delineated in the following subparagraphs..

120.5.1 Engineering Change Proposal (ECP). The contractor shall provide an ECP to the procuring activity CCB for all proposed Class I changes to a CSCI. Upon approval and implementation of the change, the contractor shall re-submit the approved ECP to the procuring activity CCB. A single ECP can accommodate more than one change including changes to two or more CSCI(S) developed by several contractors and subcontractors. Instructions for completing an ECP are provided in Appendix VIII.

120.5.2 Specification Change Notice (SCN). The SCN shall be used to document all Class I and Class II changes to System/Segment, Software Requirements, Interface Requirements, and Software Product Specifications.

120.5.2.1 Distribution of SCN. A proposed SCN shall be distributed to other activities on the specification distribution list only after the SCN has been approved by the procuring activity.

120.5.2.2 Supersession. When a contractor is requested to resubmit a proposed SCN, the resubmitted SCN shall retain the same SCN number with a new date. An SCN shall be revised and resubmitted only in conjunction with a revision to an ECP. When an SCN is revised and resubmitted, the resubmitted SCN shall show that the previously dated SCN has been superseded.

Information Handling Services, 1999
August 11, 1999 06:36:18

120.5.2.3 Approved SCN. The approved SCN shall be inserted into the specification immediately in front of Section I following the title page.

120.5.2.4 Specification change page. The specification change page(s) shall be attached to the approved SCN and shall constitute an integral part of the SCN. Updated and reissued pages shall be complete reprints of pages suitable for incorporation by removal of old pages and insertion of new pages. All portions affected by the change shall be indicated by a symbol in the right hand margin.

120.5.2.5 Proposed specification change pages. Proposed specification change pages may be attached to a proposed SCN. A proposed specification change page shall reflect only the changes of that particular page (i.e., the paragraphs not being changed shall not be incorporated on the page).

120.5.2.6 Preparation of the SCN. A sample SCN is presented in Figure 13. If required by the procuring activity, the Specification Change Notice shall be prepared by the contractor in accordance with the Specification Change Notice Data Item Description.

120.5.3 Version description document. The Version Description Document shall be prepared to accompany the release of each version of a CSCI and to accompany each release of an interim change (i.e., changes that occur between CSCI versions). This document shall record the items delivered and additional pertinent data relating to status and usage of the CSCI change. If required by the pro ' curing activity, the contractor shall prepare the Version Description Document in accordance with the format and content of the Version Description Document Data Item Description.

120.5.4 Computer software configuration index. The computer software configuration index (henceforth referred to as "index") provides the current status of specifications and additional contractual deliverable documents which depend for their content on the CSCI configuration. Document status is maintained by dates of issue, document number and title, ECPs, SCNs, and ' revision identifiers associated with each issue or document change resulting from accomplished changes. Additionally, the index contains a section which provides a summary record of milestones for CSCI development, audit, and qualification. One index is maintained for each CSCI; however, status data pertaining to a group of interrelated CSCIs may be combined in a single index when so approved by the procuring activity.

120.5.4.1 Organization and content. The index contains numerous sections that may be in book form. The format is not mandatory, but the elements of information are. The index shall be prepared based on the guidelines in this appendix and will be generally in the format as described herein. The body of the index shall have one historical record section and an additional section for each type of document or document series associated with the CSCI. The

Information Handling Services, 1999
August 11, 1999 06:36:18

Specification Change Notice

Date Prepared

1. Originator Name and Address	2. ❑ Proposed	3. Code Ident **(Design Activity)**	4. Spec No.
	❑ Approved	5. Code Ident **(SCN Prep Activity)**	6. SCN No. **3**

7. System Designation **(Type, Model, Series, etc.)**	8. Related ECP/NCP No. **4–R1**	9. Contract No.	10. Procuring Activity **(Note 2) Authority**

11. Configuration Item Nomenclature	12. Effectivity **(Serial numbers of all configuration items affected by this SCN)**

This notice informs recipients that the specification identified by the number (and revision letter) shown in block 4 has been changed. The pages changed by this SCN (being those furnished herewith) and carrying the same date as this SCN. The pages of the page numbers and dates listed below in the summary of changed pages, combined with nonlisted pages of the original issue of the revision shown in block 4, constitute the current version of this specification.

13. SCN No.	14. Pages Changed (Indicate Deletions)		* S	* A	15. Date
3	**Pages changed and transmitted herewith** **6** **7** **7a** **12 Deleted**		**X** **X**	**X**	
SCN No. **1** **2** **3** **4** **5** **6**	**ECP No.** **2–R1** **3–R2** **6** **7–C1** **8**	**Summary of previously changed pages** **1,2 2/09/86** **11 4/24/86** **Disapproved 4/10/86** **9,15,21 4/10/86** **4,8,12 4/15/86** **Note 1. Blocks 2, 4, 6, 8, 9, 11, 13, and 16 are self–explanatory** **Note 2. Type of contractual action required for implementation of this SCN**	**X** **X** **X** **X**		**3/12/86** **5/08/86**

16. Technical Concurrence **(Procuring Activity)**	Date **(Approved Date)**

"S" Indicates Supersedes Earlier Page
"A" Indicates Added Page

Figure 13. Example of Entries on SCN (CSCI Specification)

Section A – Development Record

Information Handling Services, 1999
August 11, 1999 06:36:18

following is an example of a typical outline of a computer software configuration index for a CSCI:

Section I - Software Requirements/Interface Requirements Specification

Section II - Software Product Specification

Section III - Test Documentation

Section IV - Handbooks

Section V - Manuals

Section VI - Version Description Document.

120.5.4.2 Preparation and maintenance. The initial issue of the index shall be prepared and delivered by the contractor after the establishment of the functional baseline as required by the procuring activity. Subsequent issues shall be published and distributed thereafter at regular intervals (i.e., monthly) as established by the procuring activity. The initial issue shall contain only Section A, which identifies significant schedule and completed milestone data pertaining to the CSCI, and Section I, which lists the basic issue of the Requirements Specification. In those instances of complex CSCIs for which a volume structure of the specification has been approved by the procuring activity, this listing shall identify each volume as a separate issue. An additional section (i.e. of the Sections II through VI as identified in 120.5.4.1) is added to the basic issue of any subsequent document if delivered by the contractor for approval or acceptance by the procuring activity. Each succeeding issue of the index is expanded and revised to reflect milestone data in Section A and to include the listings specified in 120.5.4.4 below. A section may be deleted from the index once a particular document or document series has outlived its usefulness. The first page(s) of the index shall be prepared to conform to figure 14 and in accordance with the following instructions:

a. Issuing agency - Enter the name of the contractor responsible for the design/development of the CSCI.

b. Contract No. Enter the number of the Government contract under which the CSCI development is accomplished.

c. CDRL Item No. Enter the item number from the Contract Data Requirement List (CDRL) for the CSCI.

d. Document No. Enter the contractor's document number for the configuration index.

e. Date - Enter the publication date of the given index issue.

f. CSCI nomenclature - Enter the approved nomenclature of the CSCI.

Information Handling Services, 1999
August 11, 1999 06:36:18

(Computer Software)			
Issuing Agency		Document No.	
Contract No.	CDRL Item No.	Date	
System		CSCI No.	Issue No.

TABLE OF CONTENTS

Page

Section A. Development Record . . . . . .

Section I. Software Requirements Specification/Volume I. Information Transfer . . . . . .

Figure 14. Computer Software Configuration Index

Information Handling Services, 1999
August 11, 1999 06:36:18

g. System - Enter the title and number of the system of which the CSCI is a part, as assigned by the procuring activity.

h. CSCI No. Enter the number of the CSCI.

i. Issue No. Enter the issue number of the index. The number "1" is assigned to the first issue; subsequent issues are numbered consecutively.

j. Table of contents - Provide a table of contents at the front of the index, following the data contained in the blocks described above. The table of contents shall identify the page number on which the initial entry appears for each section, for each separate document or volume under a section where applicable, and for each of the two parts of a section.

120.5.4.3 Preparation of development record, Section A - This section of the index shall be prepared in a format equivalent to that illustrated on figure 15, to include the information specified below.

a. CSCI No. and nomenclature - Enter the number and approved name of the CSCI as it appears on the front cover of CSCI specification (e.g., TM1112A, Message Interface Computer Page for SPACE, System 4XXL).

b. Specifications and documents - For each specification or document listed in the left hand column of figure 15, enter the date of basic issue and, for those items not indicated by an asterisk, enter the date of authentication.

c. Reviews and audits - For each milestone event indicated in the right hand column of figure 15, enter the starting and ending(s) of the (incremental) activity.

120.5.4.4 Organization of content, Sections I through VI. Each section of the index devoted to a specification or document series shall be further subdivided into two parts. Part 1 contains a listing of the basic issue(s) and all subsequent updatings of the specification or document, together with identification of ECPs incorporated and associated SCNs. Part 2 lists which ECPs have been approved and will affect the specification or document but which have not yet been reflected in a published specification or document revision or set of specification or document change pages.

Information Handling Services, 1999
August 11, 1999 06:36:18

Configuration Item Development Record – Section A	
CSCI No. and Nomenclature	
Specifications and Documents	**Reviews and Audits**
Software Requirements Specification Issued: Authenticated:	Software Specification Review
Interface Requirements Specification (s) Issued: Authenticated:	
Software Top Level Design Document* Issued:	Preliminary Design Review
Software Test Plan Issued: Approved:	
Software Detailed Design Document* Issued:	Critical Design Review
Software Test Description Issued: Approved:	
Interface Design Document* Issued:	
Data Base Design Document* Issued:	
Software Test Procedure Issued: Approved:	Test Readiness Review
Software Test Report Issued: Authenticated:	Functional Configuration Audit
Software Product Specification Approved:	Physical Configuration Audit
Contractor	Contract No.

*The authenticated versions of these documents are equivalent to the authenticated software products specification.

Figure 15. Configuration Item Development Record – Section A (CSCI)

Information Handling Services, 1999
August 11, 1999 06:36:18

120.5.4.4.1 Part I - Basic issues and incorporated change pages. Part I of each section shall contain information equivalent to that illustrated in figure 16. The figure illustrates data only for Section I of the index, and for a requirements specification which is issued as a series of separate volumes and appendices. Data shall be provided in Part I of each section as appropriate to single volume documents and the given section, as follows:

a. Issue. The first entry in this column is always "BASIC" for all documents or volumes in section I through V. The first entry in Section VI is "VDD-1". Each succeeding entry will be:

(1) for Sections I and II, and SCN number; or

(2) for Section VI, a VDD number.

Except for VDDs in Section VI: "BASIC" is replaced by a suitable indicator when a complete revision is issued, e.g., "REV A". The previous listing of all previous updates to the basic issue or to any previous revisions is deleted from the index when a new revision appears.

b. Change. For the first entry, this column shall be used to identify the number of the given document or volume. For each succeeding entry in the "ISSUE" column (i.e., SCN number, or VDD number), this column shall contain a listing of the numbers of all ECPs which are incorporated in the given updating. In addition to Class I ECPs, all sections shall identify the number of all Class II changes incorporated.

c. Title. The title of the given document or volume is entered opposite the "BASIC" entry. The title of the change is listed opposite each ECP or Class II change report number appearing in the preceding column.

d. Date of Issue. The date listed is the date of issue corresponding to each basic issue, SCN, change issue identifier, or VDD number appearing in the first column.

120.5.4.4.2 Part 2 - Approved changes. This part shall contain a listing of all approved ECPs which affect the specification or document listed within the given section but which have not yet been incorporated into published changes. Upon approval of a formal ECP, the next issue of the index shall contain an entry under Part 2 of each section in which the document, or any volume of the document, was identified in the ECP as being affected by the proposed change. When a change package is submitted, the procuring activity will verify that the impact of the CSCI change is adequately reflected in the revised document(s) and that document changes are accurately reported in the formal revised ECP which accompanies the issue of changes. Upon approval of

Information Handling Services, 1999
August 11, 1999 06:36:18

Computer Software Configuration Index

Section I – Software Requirements Specification, ESD499L385
(9 Volumes + Appendixes)

Part 1. Basic Documentation

Issue	Change	Title	Issued
Basic	Volume 1 General		01-31-85
SCN 1-1	ECP	1 F/Tell Over Multipoint Line	02-30-85
SCN 4-1	ECP	7 Delete Birdie-6	05-07-85
Basic	Volume 2 Surveillance		01-31-85
SCN 1-2	ECP	1 F/Tell Over Multipoint Line	02-30-85
SCN 3-2	ECP	4 Add Tracking-On-Station ARPS	04-06-85
SCN 9-2	ECP	11 System Limits for Manual Reports	12-05-85
Appendix IV	(Continued)		
SCN 38-IV	ECP	57 Modify Suppress Tape SRN Message	03-18-86
SCN 47-IV	ECP	63 Change Evaluation Request Format	06-12-87

Part 2. Approved Changes

ECP No.	Title	Vol/App	Approved
90	Expand Legal Range of Tape SRN	1,5,7,I,III	12-19-86
94-1	Monitor Exchange Tell Line	3,4	02-06-87
95	Compensate Grid vs. True North	1,2,3,II	06-24-87
101	Display Function Changes	3,8,9,I	06-24-87
105	Delete Automatic Mode Change	2	07-02-87

Figure 16 Configuration Index: Sample Section I – CSCI Requirements Specification

Information Handling Services, 1999
August 11, 1999 06:36:18

the revised ECP and submitted changes to each affected document or volume, the listing of the ECP under Part 2, which references that document/volume, shall be deleted in the next issue of the index. The listing for each ECP shall comply with the following instructions, as illustrated in figure 16, Part 2:

Column 1. ECP No. Enter the number of the ECP.

Column 2. Title/volume(s) appendices affected - enter (a) the title of the proposed change, and (b) if the document affected is issued in more than one volume or issued with separate appendices, identify each volume or appendix affected by the change.

Column 3. Data approved - Enter the approval date of the ECP.

120.5.5 Change status report. The change status report details the status of all proposed changes to a CSCI for which the contractor is responsible, and for which existing documentation is listed in the configuration index. The purpose of the report is to provide the procuring activity and contractor, on a periodic basis, with the current status of all officially proposed ECPs to the CSCI. The change status report supplements the configuration index. It shall be published concurrently with the index and shall be used with the index to obtain current status information on the CSCI and related changes thereto.

120.5.5.1 Preparation of the computer software change status report. The change status report shall be organized into a minimum of two sections as described herein.

120.5.5.1.1 Status listing. Section I shall contain a listing by number of each successive ECP prepared against the CSCI, with a brief indicator or comment which characterizes the status of the ECP. An example of this listing is illustrated in figure 17. When an ECP is impacted by or impacts another ECP, an appropriate note indicating the impacted or impacting ECP shall be included in the comments column.

120.5.5.1.2 Status summary. Section II of the report shall contain a detailed summary of the status information for each ECP listed in Section I which is currently active. The summary shall appear in the first issue of the change status report following assignment of a number to an ECP in preparation, and shall continue to appear in each subsequent issue of the report for at least one issue following either (a) disapproval of the ECP or (b) completion of implementation of the change. The contractor may use his own form for the status summary, provided it contains the following minimum items of information.

a. The ECP number and date of preparation.

b. The short title of the proposed ECP.

Information Handling Services, 1999
August 11, 1999 06:36:18

Change Status Report

Section 1. Status Listing

System			Date
CSCI Nomenclature	Spec No.		CSCI No.
ECP No.	**Title**	**Status**	**Comments**
2	Display Expansion Levels	A	SCN Approved
2-R1	Display Expansion Levels	A	
3	Data Link Buffer Output	A	New Information
3-R1	Data Link Buffer Output	A	SCN Approved
3-R2	Data Link Buffer Output	A	
4	Detection of Button Pop-up	A	
4-R1	Detection of Button Pop-up	S	
6	Process Simulated A-Link Data	D	Editorial Change
7	Detection of Input Data	A	
7-C1	Detection of Input Data	A	Pending Interface Requirements
7-R1	Detection of Input Data	P	
8	Data Monitor Feedback	X	

Status Indicators:
- P - ECP is being prepared
- S - ECP is submitted and under consideration by the CCB
- A - ECP has been approved by the CCB
- D - ECP has been disapproved by the CCB
- X - ECP has been deferred by the CCB
- I - ECP has been implemented

Section 2. Status Summary
(Contractor Format)

Figure 17. Change Status Report, Computer Software

Information Handling Services, 1999
August 11, 1999 06:36:18

c. A brief summary of the problem which the proposed change is to resolve.

d. A brief description of the proposed solution.

e. References documents - letters, reports of design studies or tests, problem reports, etc.

f. Preparation status - Whether the ECP is in process of coordination, is undergoing initial preparation, has been submitted, etc.

g. Action status - Whether the ECP is awaiting CCB action, has been returned or withdrawn for revision/corrections, has been approved, requires further study, etc.

h. Implementation status - the dates of distribution of the approved change in the CSCI specification and shipment of the new CSCI version.

120.6 Specification/document revision. A revision is defined as the reissue of a specification or contractual deliverable document with all the SCNs since the last reissue (or original issue) incorporated in the revised specification or document. A specification or contractual deliverable document shall not be revised without approval of the procuring activity. The specification or document revision shall not incorporate the information from any proposed SCNs that have not been approved.

120.6.1 Superseded specification/document. The superseded specification or document shall be retained intact with all change pages and SCNs to provide complete continuity of all previous changes.

Information Handling Services, 1999
August 11, 1999 06:36:18

APPENDIX XIII

130. SYSTEM ALLOCATION DOCUMENT

130.1 Purpose. This appendix provides criteria to be followed in the development of a System Allocation Document (SAD).

130.2 Scope. The SAD is used to identify the group of configuration items (computer software, hardware, and facilities) which form the basis for system design and integration. It shall be the document that identifies the location of all configuration items by configuration item serial number for each location of the system/configuration item program. The contractor shall prepare the SAD and shall update and maintain the document as specified in the contract.

130.3 Organization and content. The SAD shall include the data contained in sample formats A, B, and C shown on Figures 18, 19 and 20, however, the format is not a mandatory requirement. The document shall consist of lists, prepared as book form drawings and assigned drawing numbers, which identify the system configuration of each location. It shall also consist of the top assembly drawings of the configuration items at those locations.

130.3.1 This document shall be identified by a title page showing the system/configuration item program designation number assigned by the procuring activity followed by the title "System Allocation Document" as indicated in figure 18, sample A.

c. A brief summary of the problem which the proposed change is to resolve.

130.3.2 Part I of the SAD shall contain the information shown in figure 19, sample B. This information shall be referenced/released by the Procuring Activity or integrating contractor as a book-form drawing. The drawing may be in the form of a data processing machine printout.

a. The location block shall contain the official designation of the Procuring Activity or other organizational level where the listed configuration items will be integrated as a system for its mission.

b. The system employment and configuration block shall contain a brief narrative describing the project at the location and describing the configuration required for that project.

c. The specification reference block shall contain the paragraph numbers in the System/Segment Specification, section 3.1 system description which are applicable to the narrated employment and configuration description. For configuration item programs, the paragraphs of Section 3.1 configuration item definition of the development specification shall be used.

Information Handling Services, 1999
August 11, 1999 06:36:18

**Technical Control Equipment
for
Overseas Autovon**

Location	Drawing Number
Naples, Italy	90052151
Coltano, Italy	90052152
Hillingdon, England	90052153
Langerkoph, Germany	90052155
Corozal, Canal Zone	90052156
Feldberg, Germany	90052154
Donnersberg, Germany	90052158
Martlesham Heath, England	90052160
Flobecq, Belgium	90052161
Humosa, Spain	90052162
Schoenfeld, Germany	90052163
Fuchu, Japan	90052164
Athens, Greece	90052166
Ankara, Turkey	90052167
Finegoyan Bay, Guam	90052168
Futema, Okinawa	90052169
Dau, Philippine Islands	90052170
Gross Mountain, Taiwan	90052171

Figure 18 Sample A, System Allocation Document

Information Handling Services, 1999
August 11, 1999 06:36:18

System Employment and Configuration				Specification Reference		Location	
System Equipment				Installed Equipment			
Config Item Number	Short Title	Part Number	Serial Number	Config Item Number	Short Title	Part Number	Serial Number
Drawing Title and Number				4XXL System Allocation Document Part 1			
				Number	Sheet of	Issue	

Figure 19. Sample B, Typical System Allocation Document – Part 1

Information Handling Services, 1999
August 11, 1999 06:36:18

4XXL Systems Allocation Document – Part 2				
Location				
Config Item No.	Spec No.	Equipment Nomenclature	Config Item Qty	Assembly Top Dwg No.
Number		Sheet of		Issue

Figure 20. Sample C, Typical System Allocation Document – Part 2

Information Handling Services, 1999
August 11, 1999 06:36:18

d. System equipment are the identified configuration items to be formally accepted by the contracting activity at the contractor's plant for accountability thereafter by the location. Some of these configuration items will be shipped to the location with other configuration items installed in them.

NOTE: The procuring activity regularly accepts configuration items from one source and supplies them for installation in equipment to be furnished as a configuration item by another source. An example is an engine supplied for installation in an aerospace vehicle. In these cases, the installing contractor shall always identify the supplied configuration items in the list of material of his drawing as Government-furnished.

e. The configuration item number for the HWCI, and the software inventory number for the CSCI, based on the agreed to software inventory numbering system.

f. The short title entry shall contain the noun phrase which is part of the title of the configuration item top drawing.

g. The part number shall contain the part number of all quantities of the HWCI allocated by engineering design to the location.

NOTE: Initially, the contractor shall assign just one part number for all allocations of a configuration item. Practice to the contrary may indicate that a part number is being used as a configuration item number, indicating noninterchangeability and adversely affecting updating and maintenance.

h. The serial number entry shall contain all serial numbers for the total quantities of each "configuration item number" allocated by engineering design to the location.

i. Installed equipment shall contain the configuration items that are installed. in the system equipment at the contractor's plant, or as removed and replaced subsequent to acceptance and recorded in historical records accompanying the configuration item.

j. The configuration item number entry shall list all configuration items installed in each system equipment configuration item number.

k. The short title, part number, and serial number shall be as defined in paragraphs f, g, and h, respectively, as applied to each installed equipment/configuration item number.

130.3.3 Part II of the SAD shall contain the top assembly drawing and quantity of all configuration items shown in Part I. Figure 20, sample C, is provided as a guide; all entries are self-explanatory. The equivalent to a hardware top assembly drawing for computer software is a CSCI architecture diagram found in the Software Product Specification.

Information Handling Services, 1999
August 11, 1999 06:36:18

130.3.4 Additional parts may be added, as approved by the contracting activity, to contain different machine sorts of part I data.

130.3.5 Configuration items that must be moved to different locations at intervals shall be listed and identified as such so that the entry need not be revised each time these configuration items are rotated or moved from site to site. For each such configuration item, the list shall identify, where practicable, the office maintaining records of the configuration item's movements.

Information Handling Services, 1999
August 11, 1999 06:36:18

APPENDIX XIV

140. DEFINITIONS

140.1 Baseline. A configuration identification document or a set of such documents formally designated and fixed at a specific time during a configuration items (CI's) life cycle. Baselines, plus approved changes from those baselines, constitute the current configuration identification. For configuration management there are four baselines, as follows:

140.1.1 Functional baseline. The functional baseline is normally the first baseline established and is usually the product of the systems requirements process as described in the latest edition of FAA Order 1810.1, System Acquisition Management. It shall be established by authentication of the system specification, or item specification. This document becomes the contractor's technical base for accomplishing system requirements analysis and allocating functions to configuration items (CIs).

140.1.2 Allocated baseline. As allocated requirements are grouped into a specific function or set of functions, a new CI is identified. The development specification which contains the "design to" technical requirements shall be the basis for detail design. Establishment of the allocated baseline occurs with the authentication of the development specification.

140.1.3 Developmental Configuration. The contractor's software and associated technical documentation that defines the evolving configuration of a CSCI during development. It is under the development contractor's configuration control and describes the software design and implementation. The Developmental Configuration for CSCI consists of a Software Design Document and source code listings. Any item of the Developmental Configuration may be stored on electronic media.

140.1.4 Product baseline. The detailed design shall be documented in the form of a product specification and associated drawings. Authentication of the product specification and/or drawings and interface control or other documentation shall establish the product baseline.

140.1.5 Other configuration items. Facility construction contract requirements are based on the construction drawings and specifications for each operational site.

140.2 Baseline management. Baseline management is the application of technical and administrative direction to designate the documents which formally identify and establish the configuration identification at specific times during its life cycle, i.e., functional, allocated, design and product baseline.

Information Handling Services, 1999
August 11, 1999 06:36:18

140.3 Code identification numbers. A five digit number listed in Cataloging Handbook H4/H8, Commercial and Government Entity (CAGE) Code, which is assigned to activities that manufacture or develop items for the Federal Government. When used with an ECP number, the CAGE designates the contractor or Government agency assigning the ECP number. When used with a drawing number or part number, the CAGE number designates the design activity from whose series the drawing or part number is assigned. The CAGE code was previously called manufacture's code, code identification number or federal supply code for manufacture (FSCM).

140.4 Computer data definitions. A statement of the characteristics of elements of information operated upon by hardware in responding to computer instructions. These characteristics may include, but are not limited to, type, range, structure, and value.

140.5 Computer software. A combination of associated computer instructions and computer data definitions required to enable the computer hardware to perform computational or control functions.

140.6 Computer Software Component (CSC). A functional or logically distinct part of a Computer Software Configuration Item (CSCI). Computer software components may be top-level, or lower-level.

140.7 Computer software configuration item. See Configuration Item.

140.8 Concept analysis. The initial period of a program when the technical, functional, and economic basis for an acquisition is established through comprehensive studies and experimental development and evaluation.

140.9 Configuration. The functional and/or physical-characteristics as set forth in technical documentation and achieved in a product. The term configuration denotes the orderly agreement of subordinate parts and functional characteristics to give unity to the whole.

140.10 Configuration audits. The checking of an item for compliance with the configuration identification and verification that configuration management processes are being applied as required.

140.11 Configuration control. The systematic evaluation, coordination, approval or disapproval, and implementation of all approved changes in the configuration of a Configuration Item (CI) after formal establishment of its configuration identification.

140.12 Configuration identification. The currently approved or conditionally approved technical documentation for a configuration item as set forth in specifications, drawings, and associated lists, and documents referenced therein.

140.13 Configuration Item (CI). An aggregation of hardware/software, or any of its discrete portions, which satisfies an end-use function and is designated by the Government for configuration management. CIs may vary

Information Handling Services, 1999
August 11, 1999 06:36:18

widely in complexity, size, and type; from a system, group, or set to a unit, assembly, subassembly, or part. During development and initial production, CIs are only those specification items that are referenced directly in a contract.

140.14 Configuration item development record. The configuration item development record provides status information on the development progress of a CI as reflected by configuration audits and reviews.

140.15 Configuration Item Identification (CII) number. A CII number is a permanent number assigned by the design activity to identify a configuration item. The number is a common identification for all units in a configuration item type, model, series, and serves as a permanent address for all actions and document applicable to the type, mode, and series. The CII number is seven-digits with alpha-numeric characters.

140.16 Configuration item specification addendum. A configuration item specification addendum is accomplished by writing a new specification (addendum) by direct reference to an existing specification and recording in the new specification reference to each paragraph in the existing specification. A specification created in this manner is a new and complete specification with a new specification number.

140.17 Configuration management. A discipline applying technical and administrative direction and surveillance to (a) identify and document the functional and physical characteristics of a configuration item, (b) control changes to those characteristics, and (c) record and report change processing and implementation status, (d) verify through formal examination, configuration item and its configuration identification.

140.18 Configuration management plan. The configuration management plan defines the implementation (including policies and methods) of configuration management on a particular program/project.

140.19 Configuration status accounting. The recording and reporting of the information that is needed to manage configuration effectively, including a listing of the approved configuration identification, the status of proposed changes to configuration, and the implementation status of approved changes.

140.20 Contract. The legal agreement between Government and Industry, or similar internal agreement wholly within the Government, for the development, production, maintenance, or modification of an item.

Information Handling Services, 1999
August 11, 1999 06:36:18

140.21 Contractor. An individual, partnership, company, corporation, or association having a contract with the procuring activity for the design, development, manufacture, maintenance, modification, or supply of items under the terms of a contract. A government activity performing any or all of the above actions is considered to be a contractor for configuration management purposes.

140.22 Critical Design Review - (CDR). CDRs are held to review and verify specific system designs before detailed coding of software or fabrication of hardware begins. The contractor presents a draft design specification(s) that is reviewed to ensure that the functions allocated by the Development Specification are properly addressed at the "build to" level. Upon successful completion and approval of the CDR, the updated detailed design is entered into the contractor's Developmental Configuration or the Design Baseline is established as specified. The baseline provides approved and controlled engineering drawings and form/fit specifications for hardware.

140.23 Data (Technical data and information). The means for communication of concepts, plans, description, requirements, and instructions relating to technical projects, material, systems, and services. These may include specifications, standards, engineering drawings, associated lists, manuals, and reports, including scientific and technical reports. They may be in the form of documents, displays, sound records, punched cards, and digital or analog data.

140.24 Deployment Readiness Review (DRR). The DRR is an assessment conducted to assure that the subsystem is ready for the field, the field is ready to accept the subsystem, and readiness for incorporation into the NAS for tracking. The results of this task are to ascertain and test project readiness against currently imposed or applicable technical and programmatic requirements.

140.25 Deviation. A specific written authorization, granted prior to the manufacture of an item, to depart from a particular performance or design requirement of a specification, drawing, or other document for a specific number of units or a specific period of time. A deviation differs from an engineering change in that an approved engineering change requires corresponding revision of the documentation defining the affected item, whereas a deviation does not contemplate revision of the applicable specification or drawing.

140.26 Engineering change. An alteration in the configuration of a Configuration Item (CI) or items, delivered, to be delivered, or under development, after formal establishment of its configuration identification.

140.26.1 Class I engineering change. (See 80-4).

Information Handling Services, 1999
August 11, 1999 06:36:18

140.27 Engineering Change Proposal (ECP). A term which includes both the proposal for engineering change and the documentation by which the change is described and proposed.

140.28 Engineering release record. The engineering release record comprises the official data file which records and interrelates engineering data, and changes thereto, which technically describe and are to be or have been used to build/operate/maintain CIs.

140.29 Firmware. Firmware is computer software resident in hardware read-only-memory devices, that cannot be modified under program control. Changes to firmware should be treated as functional changes based on the fact that all software changes require some retest.

140.30 First article development. The phase when the initial unit is developed and produced under contract providing a system that can be tested.

140.31 Formal Qualification Review (FQR). A formal review, normally accomplished incrementally at the contracting facility, of test reports and test data generated during the formal qualification of a new group of configuration items comprising a system to ensure that all tests required by Section 4 of the development specification(s) have been accomplished and that the system performs as required. Usually held in conjunction with the FCA, it may be delayed until after the FCA/PCA if total system testing is required (see MIL-STD-1521).

140.32 Full scale development. The phase of a program when the system/equipment/computer program special support and training equipment are designed, fabricated, tested, and evaluated.

140.33 Functional area. A distinct group of system performance requirements which, together with all other such groupings, form the next lower level breakdown of the system on the basis of function.

140.34 Functional characteristics. Quantitative performance and operating and logistic parameters and their respective tolerances. Functional characteristics include all performance parameters, such as range, speed, reliability, maintainability, and safety.

140.35 Functional Configuration Audit (FCA). The formal examination of functional characteristics test data for a configuration item, prior to acceptance, to validate that the item has achieved the performance and functional characteristics specified in its functional or allocated configuration identification.

140.36 Hardware Configuration Item (HWCI). See configuration item.

Information Handling Services, 1999
August 11, 1999 06:36:18

140.37 Installation control requirements. The term installation control requirements denotes the space or location allocated for each configuration item or equipment, taking into account installation, assembly, test, operation, maintenance, environment, power requirements allocated for each item.

140.38 Interface. The term is defined as the functional and physical characteristics required to exist at a common boundary between two or more equipments/computer software products, which are provided by different contractors/Government agencies.

140.39 Interface control. Interface control comprises the delineation of the procedures and documentation, both administrative and technical, contractually necessary for identification of functional and physical characteristics between two or more configuration items (CIs) which are provided by different contractor/government agencies, and the resolution of the problem thereto.

140.40 Interface control drawing. An interface control drawing depicts physical and functional interface engineering requirements of a configuration item which affect the design or operation of co-functioning configuration items. These drawings are used as design control documents, delineating interface engineering data coordinated for the purpose of (a) establishing and maintaining compatibility between co-functioning configuration items, (b) controlling interface designs thereby minimizing change to configuration item requirements which would adversely affect compatibility with co-functioning subsystems, (c) communicating design decisions and changes to participating activities, and (d) establishing envelope and assess compatibility to verify that all interfacing contractor/Government agency supplied configuration items and function without interference through assembly, test, and all expected operating conditions.

140.41 Interface Requirements Specification (IRS). The IRS specifies in detail the requirements for one or more CSCI interfaces within the system. Under various conditions the interface requirements may be included in the associated Software Requirements Specification. The IRS is part of the allocated configuration identification in accordance with FAA-STD-005.

140.42 Line Replaceable Unit (LRU). The lowest possible unit to be replaced within the operating system during site level maintenance activities. It is a separate, installable physical package performing a single function or groups of closely related functions.

140.43 Manufacturer's code. (See 140.3)

140.44 Physical Configuration Audit (PCA). The formal examination of the "as-built" configuration of a unit of a CI to verify that it conforms to its technical documentation in order to establish the CI's initial product configuration identification.

Information Handling Services, 1999
August 11, 1999 06:36:18

140.45 Preliminary Design Review (PDR). PDRs are used to review the basic approach for a configuration item or group of items and supporting documentation submitted by the contractor. The contractor conducts the PDRs to demonstrate that all the functions of the subsystem specification have been completely and accurately allocated to the CI specifications. For hardware, the initial allocated baseline is set upon the successful conclusion of the initial PDR.

140.46 Privately developed item. An item completely developed at private expense and offered to the Government as a production article, with government control of the article's configuration normally limited to its form, fit, and function.

140.47 Procuring activity. An activity responsible for the procurement of equipment and/or services.

140.48 Programming and timing interfaces. Describes the critical system function interfaces and signal timing constraints inherent in the system hardware and computer software.

140.49 Retrofit. Incorporation of an engineering change (at any level) in accepted or in-service items.

140.50 Specification document. The term specification document, as used herein, shall denote those documents primarily intended for use in procurement that either increases Federal Aviation Administration permanent -inventory, provides services for operational facilities, or provides inventory and services, or both, for research and development activities.

140.51 Specification Change Notice (SCN). A document used to propose, transmit, and record changes to a specification. In proposed form, prior to approval, the SCN (proposed) supplies proposed changes in the text of each page affected.

140.52 Software. A collection of associated computer programs and computer data required to enable the computer equipment to perform computational or control functions. It is the abstract of tapes, disks, card decks, and firmware.

140.53 Software Specification Review (SSR). The SSR is the review of the specifications for each identified Computer Software Configuration Item (CSCI) and related FAA Interface Requirements Documents (IRDs).

140.54 Source control drawing. A source control drawing depicts an existing commercial or vendor item that exclusively provides the performance, installation, and interchangeable characteristics required for one or more specific critical applications. Quality conformance inspection and approval procedure shall be stated on the drawing or in a document referenced on the drawing.

Information Handling Services, 1999
August 11, 1999 06:36:18

140.55 Specification control drawing. A specification control drawing depicts an existing commercial item or vendor-developed item advertised or catalogued as available on a unrestricted basis, or order as an "off-the-shelf" item, or an item, while not commercially available, is procurable on order from a specialized segment of an industry.

140.56 Subcontractor. A subcontractor is an individual, partnership, corporation, or association, who (which) contracts with a contractor to design, develop, design and manufacture, or manufacture items, which are, or were, designed specifically for use in a government application.

140.57 System. A combination of two or more sets, generally physically separated when in operation, and such other units, assemblies and basic parts necessary to perform an operational function or functions. Typical examples are: telephone carrier system, ground controlled approach electronic system, telemetering system, facsimile transmission system.

140.58 System allocation document. A system allocation document is a document which identifies the aggregation of configuration items by serial number and the system configuration at each location.

140.59 System Design Review (SDR). The SDR evaluates the total system requirements including a summary review of system engineering management activities and an overall review of the operational/support requirements. Successful completion and approval of the SDR is required prior to establishment of the functional baseline, which generally consists of the functional specification and the requirements document describing what the system is to accomplish.

140.60 System engineering. System engineering as it relates to configuration management is the application of scientific and engineering efforts to transform an operational need into a description of system performance parameters. A system configuration must be ultimately called out in the configuration identification specifications.

140.61 System released ICD. A system released ICD is an authorized document which has been provided by the contractor with prime responsibility and signed by the interfacing subsystem contractors and the procuring activity's subsystem project managers. When only one of the interfacing contractors is under contract, the ICD is signed by the interfacing contractor and the procuring activity's project manager.

140.62 System Requirements Review (SRR). The SRR provides a means to review the FAA's operational and functional requirements. The contractor's total system engineering management activity and its output is reviewed for responsiveness to the SOW.

Information Handling Services, 1999
August 11, 1999 06:36:18

140.63 System validation. The period of a program when the major program characteristics (technical, cost, and schedule) are refined and validated through extensive study and analysis, development, test, and evaluation.

140.64 Test Readiness Review (TRR). The TRR is conducted in order to assess the readiness to begin formal acceptance testing of a specified configuration item. A technical understanding is reached on preliminary, informal test results, and the validity and accuracy of supporting user manuals.

140.65 Waiver. A written authorization to accept a configuration item or other designated item, which during production or after, having been submitted for inspection, is found to depart from specified requirements, but nevertheless is considered suitable for use "as is" or after rework by an approved method.

Information Handling Services, 1999
August 11, 1999 06:36:18

9003329 0008040 65T

(THIS PAGE INTENTIONALLY LEFT BLANK)

Information Handling Services, 1999
August 11, 1999 06:36:18

APPENDIX XV

150. CM IN THE NAS LIFE CYCLE

150.1 CM in the NAS life cycle. It is FAA's policy to develop and implement the techniques of Configuration Management in order to achieve required NAS performance, operational efficiency, reliability, maintainability, and safety. The NAS life cycle is complex in that there is a current system which is to be transformed over time into the desired system. Embedded within the overall NAS is a diverse set of subsystems each executing its assigned portion of the NAS mission and each with its own, unique subsystem life cycle. These individual subsystem life cycles must be coordinated and managed in order that the NAS life cycle be effectively concluded. From time to time groups of subsystem life cycles must be synchronized so that incremental capabilities may be introduced into the operational NAS. As a result, interfaces among subsystems must be controlled not only when allocation of functionality to subsystems is defined, but throughout each of the otherwise unsynchronized life cycles of each subsystem.

The three basic NAS life cycle phases, requirements determination, acquisition, and operational support, provide the framework for CM activity. The requirements determination phase determines the operational requirements through mission analyses, technology application studies, and concept analyses. During the acquisition phase, NAS functional requirements are allocated to major subsystem components; and subsystem equipment, software, and firmware are designed, developed, produced, installed, and commissioned. The operational phase covers the time when each project enters operational. service until it is removed from service. This phase provides operational service in the most efficient, cost-effective manner possible. While CM is applied throughout the life cycle, its specific application is dependent upon the life-cycle phase being considered. Note, however, that for the NAS, each of the three phases is always in execution: requirements are continually being updated, subsystems are continually being acquired, and the operational NAS is in continuous operation. As a result, all the CM activities described here are always in simultaneous execution. During the requirements determination phase, CM not only provides the mechanisms to control the operational requirements and performance/system specifications, but also ensures discipline early in the development process. As development progresses and technical requirements are clarified, the need for visibility into the functional and physical characteristics of end products increases, as does the need to formally control changes to those characteristics.

Configuration management for the NAS is based on the life cycle management approach to NAS Plan implementation which involves transitioning from functional NAS operational requirements to an overall NAS design. Functional requirements are allocated to individual projects within the NAS, each of which has its own baselines. The project products are integrated into the

Information Handling Services, 1999
August 11, 1999 06:36:18

existing NAS upon completion of production, and they are operationally maintained until removed from service. The NAS life cycle is depicted in Figure 21.

The Configuration Management system established by a contractor influences the NAS life cycle. Contractor configuration management response flows from the acquisition life cycle phase to support the operational life cycle phase. Baselines shall be consistent and traceable to operational requirements.

150.2 Software development interface. FAA-STD-026 establishes requirements for a uniform software development process which is applicable throughout the system life-cycle. It includes the generation of different types and levels of software and documentation, the application of development tools, approaches and methods and project planning and control.

The life cycle established in FAA-STD-026 is directed to software development. When the standard is invoked along with FAA-STD-021, the FAA-STD-021 life cycle shall be followed. The allocated baseline shall be established following PDR instead of SSR to keep the baselines consistent.

Information Handling Services, 1999
August 11, 1999 06:36:18

9003329 0008043 369

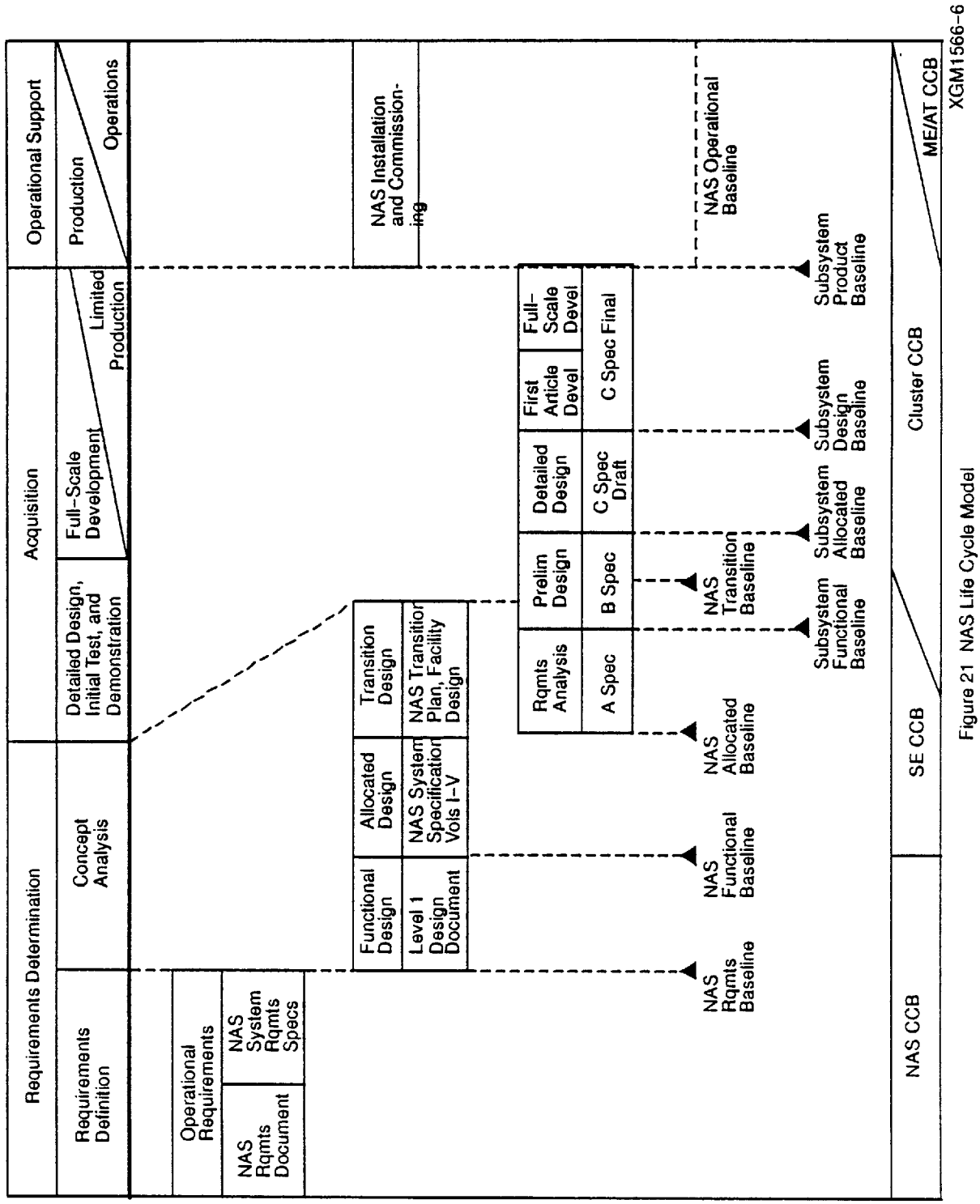

Figure 21 NAS Life Cycle Model

Information Handling Services, 1999
August 11, 1999 06:36:18

9003329 0008044 2T5

(THIS PAGE INTENTIONALLY LEFT BLANK)

Information Handling Services, 1999
August 11, 1999 06:36:18