STD.IEEE 1100-ENGL 1999 ■ 4805702 0573254 352 ■

IEEE Std 1100-1999

IEEE Recommended Practice for

Powering and Grounding Electronic Equipment

Copyright by the Institute Of Electrical & Electronics Engineers Inc
Fri Jul 20 10:32:35 2001

IEEE Std 1100-1999
(Revision of
IEEE Std 1100-1992)

IEEE Recommended Practice for Powering and Grounding Electronic Equipment

Sponsor

Power Systems Engineering Committee
of the
Industrial and Commercial Power Systems Department
of the
IEEE Industry Applications Society

Approved 22 March 1999

IEEE-SA Standards Board

Abstract: Recommended design, installation, and maintenance practices for electrical power and grounding (including both power-related and signal-related noise control) of sensitive electronic processing equipment used in commercial and industrial applications are presented. The main objective is to provide a consensus of recommended practices in an area where conflicting information and confusion, stemming primarily from different viewpoints of the same problem, have dominated. Practices herein address electronic equipment performance issues while maintaining a safe installation. A brief description is given of the nature of power quality problems, possible solutions, and the resources available for assistance in dealing with problems. Fundamental concepts are reviewed. Instrumentation and procedures for conducting a survey of the power distribution system are described. Site surveys and site power analyses are considered. Case histories are given to illustrate typical problems.
Keywords: commercial applications, electrical power, grounding, industrial applications, sensitive equipment

Copyright by the Institute Of Electrical & Electronics Engineers Inc
Fri Jul 20 10:33:06 2001

Grateful acknowledgment is made to the following for having granted permission to reprint illustrations in this document as listed below:

Figures 2-1, 2-2, 2-3, 2-4, 4-4, and 4-5 from *The Dranetz Field Handbook for Power Quality Analysis*, Dranetz Technologies, Inc., Edison, NJ, 1991.

Figure 3-3 from *Westinghouse Electrical Transmission and Distribution Reference*, copyright 1964.

Figure 3-4 from Global Atmospherics, Inc., copyright © 1999.

Figure 4-6 from A. McEachern, *Handbook of Power Signatures*, Basic Measuring Instruments, Foster City, CA, 1988.

Table 4-2 from ANSI C84.1-1995, American National Standard for Electric Power Systems and Equipment—Voltage Ratings (60 Hz), copyright 1989 by the American National Standards Institute.

Figure 4-29 from R. H. Golde, ed., *Lightning*, Vol. 2, *Lightning Protection*, London: Academic Press, 1977, p. 802.

Figure 4-32 from R. B. Standler, *Protection of Electronic Circuits for Overvoltages*, John Wiley & Sons, Inc., copyright © 1989.

Figure 5-1 from Angus Electronics Co., Indianapolis, IN.

First Printing
September 1999
SH94741

The Institute of Electrical and Electronics Engineers, Inc.
345 East 47th Street, New York, NY 10017-2394, USA

Copyright © 1999 by the Institute of Electrical and Electronics Engineers, Inc.
All rights reserved. Published 15 September 1999. Printed in the United States of America

Print: ISBN 0-7381-1660-2 SH94741
PDF: ISBN 0-7381-1661-0 SS94741

No part of this publication may be reproduced in any form, in an electronic retrieval system or otherwise, without the prior written permission of the publisher.

Copyright by the Institute Of Electrical & Electronics Engineers Inc
Fri Jul 20 10:33:06 2001

IEEE Standards documents are developed within the IEEE Societies and the Standards Coordinating Committees of the IEEE Standards Association (IEEE-SA) Standards Board. Members of the committees serve voluntarily and without compensation. They are not necessarily members of the Institute. The standards developed within IEEE represent a consensus of the broad expertise on the subject within the Institute as well as those activities outside of IEEE that have expressed an interest in participating in the development of the standard.

Use of an IEEE Standard is wholly voluntary. The existence of an IEEE Standard does not imply that there are no other ways to produce, test, measure, purchase, market, or provide other goods and services related to the scope of the IEEE Standard. Furthermore, the viewpoint expressed at the time a standard is approved and issued is subject to change brought about through developments in the state of the art and comments received from users of the standard. Every IEEE Standard is subjected to review at least every five years for revision or reaffirmation. When a document is more than five years old and has not been reaffirmed, it is reasonable to conclude that its contents, although still of some value, do not wholly reflect the present state of the art. Users are cautioned to check to determine that they have the latest edition of any IEEE Standard.

Comments for revision of IEEE Standards are welcome from any interested party, regardless of membership affiliation with IEEE. Suggestions for changes in documents should be in the form of a proposed change of text, together with appropriate supporting comments.

Interpretations: Occasionally questions may arise regarding the meaning of portions of standards as they relate to specific applications. When the need for interpretations is brought to the attention of IEEE, the Institute will initiate action to prepare appropriate responses. Since IEEE Standards represent a consensus of all concerned interests, it is important to ensure that any interpretation has also received the concurrence of a balance of interests. For this reason, IEEE and the members of its societies and Standards Coordinating Committees are not able to provide an instant response to interpretation requests except in those cases where the matter has previously received formal consideration.

Comments on standards and requests for interpretations should be addressed to:

Secretary, IEEE-SA Standards Board
445 Hoes Lane
P.O. Box 1331
Piscataway, NJ 08855-1331
USA

Note: Attention is called to the possibility that implementation of this standard may require use of subject matter covered by patent rights. By publication of this standard, no position is taken with respect to the existence or validity of any patent rights in connection therewith. The IEEE shall not be responsible for identifying patents for which a license may be required by an IEEE standard or for conducting inquiries into the legal validity or scope of those patents that are brought to its attention.

Authorization to photocopy portions of any individual standard for internal or personal use is granted by the Institute of Electrical and Electronics Engineers, Inc., provided that the appropriate fee is paid to Copyright Clearance Center. To arrange for payment of licensing fee, please contact Copyright Clearance Center, Customer Service, 222 Rosewood Drive, Danvers, MA 01923 USA; (978) 750-8400. Permission to photocopy portions of any individual standard for educational classroom use can also be obtained through the Copyright Clearance Center.

Copyright by the Institute Of Electrical & Electronics Engineers Inc
Fri Jul 20 10:33:07 2001

Introduction

(This introduction is not a part of IEEE Std 1100-1999, IEEE Recommended Practice for Powering and Grounding Electronic Equipment.)

This recommended practice is a publication of the Industry Applications Society (IAS) of the IEEE and is one of the books in the *IEEE Color Book Series*, which relates to industrial and commercial power systems. The purpose of this recommended practice is to provide consensus for installing and providing power to electronic equipment in literally all sectors and power system environments. This has been a growing area of concern as incompatibilities between power system characteristics and equipment tolerances have caused operating problems and loss of productivity in all kinds of power systems.

As load and source compatibility concerns have become more common, the facility engineers and system designers have been in the spotlight to provide solutions. Power and microelectronic equipment designs also have a role in solving the problems. Electronic equipment can be a contributor to, and a victim of, powering and grounding incompatibilities in power systems. A cooperative effort is required among power system designers, equipment manufacturers, and the electric utilities to provide and maintain an acceptable level of load/source compatibility.

To address this multidisciplined area, the Working Group on Powering and Grounding Sensitive Electronic Equipment was formed in 1986 to write a recommended practice, which was first published in 1992 and subsequently revised in accordance with IEEE-SA rules. The project was sponsored by the IAS Industrial and Commercial Power Systems Department, Power Systems Engineering Committee. This practice is intended to complement other recommended practices in the *IEEE Color Book Series* and has been coordinated with other related codes/standards, as well as nationally recognized testing laboratories.

Copyright © 1999 IEEE. All rights reserved.

Copyright by the Institute Of Electrical & Electronics Engineers Inc
Fri Jul 20 10:33:09 2001

Participants

At the time this recommended practice was approved, the IEEE Working Group on Powering and Grounding Sensitive Electronic Equipment had the following membership:

Thomas M. Gruzs, *Chair* **Christopher J. Melhorn**, *Secretary*

Chapter 1: Overview—**Thomas M. Gruzs,** *Chair*

Chapter 2: Definitions—**Carl E. Becker,** *Chair*

Chapter 3: General needs guidelines—**Thomas S. Key,** *Chair*

Chapter 4: Fundamentals—**Warren H. Lewis,** *Chair*

Chapter 5: Instrumentation—**Douglas S. Dorr,** *Chair*

Chapter 6: Site surveys and site power analyses—**Kenneth M. Michaels,** *Chair*

Chapter 7: Specification and selection of equipment and materials—**Vladi F. Basch,** *Chair*

Chapter 8: Recommended design/installation practices—**Michael Butkiewicz,** *Chair*

Chapter 9: Telecommunications and distributed computing—**William Bush,** *Chair*

Chapter 10: Case histories—**Donald W. Zipse,** *Chair*

Math Bollen
James A. Canham
Edward C. Cantwell
Wendall Carter
John B. Dagenhart
Francis J. Fiederlein
Jeff Franklin
Joseph Groesch
James R. Harvey
Prem Khera
Don O. Koval
Phillip Lim
Allen G. Morinec
William J. Moylan
Eduard Mulhadi
Raymond Nerenberg
Steve Pierre
Percy E. Pool
Tom Poole
Elliot Rappaport
Melvin Sanders
Lynn F. Saunders
Robert J. Schuerger
Richard E. Singer
Murray Slater
Richard H. Smith
Meil Thorla
Timothy D. Unruh
David B. Vannoy
Raymond M. Waggoner*
Van E. Wagner

* Deceased

The following members of the balloting committee voted on this recommended practice:

Carl E. Becker
Michael Butkiewicz
Edward C. Cantwell
John B. Dagenhart
Douglas S. Dorr
Francis J. Fiederlein
Jerry M. Frank
Daniel L. Goldberg
Thomas M. Gruzs
James R. Harvey
Robert W. Ingham
R. Gerald Irvine
Suresh C. Kapoor
Don O. Koval
Wei-Jen Lee
Donald H. McCullough
Christopher J. Melhorn
Kenneth M. Michaels
Allen G. Morinec
William J. Moylan
James R. Pfafflin
Percy E. Pool
Vincent Saporita
Lynn F. Saunders
Robert J. Schuerger
Richard H. Smith
Merlin Stansbury
David B. Vannoy
Raymond M. Waggoner*
Donald W. Zipse

* Deceased

Copyright © 1999 IEEE. All rights reserved.

Copyright by the Institute Of Electrical & Electronics Engineers Inc
Fri Jul 20 10:33:10 2001

The final conditions for approval of this recommended practice were met on 22 March 1999. This recommended practice was conditionally approved by the IEEE-SA Standards Board on 18 March 1999, with the following membership:

Richard J. Holleman, *Chair* **Donald N. Hierman,** *Vice Chair*
Judith Gorman, *Secretary*

Satish K. Aggarwal
Dennis Bodson
Mark D. Bowman
James T. Carlo
Gary R. Engmann
Harold E. Epstein
Jay Forster*
Ruben D. Garzon
James H. Gurney
Lowell G. Johnson
Robert J. Kennelly
E. G. "Al" Kiener
Joseph L. Koepfinger*
L. Bruce McClung
Daleep C. Mohla
Robert F. Munzner
Louis-François Pau
Ronald C. Petersen
Gerald H. Peterson
John B. Posey
Gary S. Robinson
Akio Tojo
Hans E. Weinrich
Donald W. Zipse

*Member Emeritus

Also included is the following nonvoting IEEE-SA Standards Board liaison:

Robert E. Hebner

Yvette Ho Sang
IEEE Standards Project Editor

National Electrical Code and NEC are both registered trademarks of the National Fire Protection Association, Inc.
National Electrical Safety Code and NESC are both registered trademarks and service marks of the Institute of Electrical and Electronics Engineers, Inc.

Copyright © 1999 IEEE. All rights reserved.

Copyright by the Institute Of Electrical & Electronics Engineers Inc
Fri Jul 20 10:33:11 2001

Contents

Chapter 1
Overview 1

1.1 Scope 1
1.2 Purpose 1
1.3 Background 1
1.4 Text organization 3
1.5 Bibliography 4

Chapter 2
Definitions 5

2.1 Introduction 5
2.2 Alphabetical listing of terms 5
2.3 Words avoided 15
2.4 Abbreviations and acronyms 16
2.5 References 20
2.6 Bibliography 20

Chapter 3
General needs guidelines 23

3.1 Introduction 23
3.2 Power quality considerations 26
3.3 Grounding considerations 38
3.4 Protection of susceptible equipment 44
3.5 Information technology equipment (ITE) 46
3.6 Shielded, filtered, enclosed EMI/EMC areas 53
3.7 Safety systems 54
3.8 Coordination with other codes, standards, and agencies 55
3.9 References 57
3.10 Bibliography 58

Chapter 4
Fundamentals 61

4.1 Introduction 61
4.2 Impedance considerations 61
4.3 High- and low-frequency regimes defined 78
4.4 Electric power supplier's distribution system voltage disturbances 83
4.5 Load and power source interactions 85
4.6 Voltage surges 107
4.7 Grounding subsystems 129
4.8 Shielding concepts 165
4.9 References 170
4.10 Bibliography 171

Copyright by the Institute Of Electrical & Electronics Engineers Inc
Fri Jul 20 10:33:12 2001

Chapter 5
Instrumentation 177

5.1 Introduction 177
5.2 Range of available instrumentation 177
5.3 Voltage and current measurements 178
5.4 Descriptions of site survey tools 183
5.5 Measurement considerations 192
5.6 Reference 195
5.7 Bibliography 195

Chapter 6
Site surveys and site power analyses 197

6.1 Introduction 197
6.2 Objectives and approaches 197
6.3 Coordinating involved parties 198
6.4 Conducting a site survey 200
6.5 Harmonic current and voltage measurements 222
6.6 Applying data to select cost-effective solutions 224
6.7 Long-term power monitoring 224
6.8 Conclusions 225
6.9 References 226
6.10 Bibliography 226

Chapter 7
Specification and selection of equipment and materials 229

7.1 General discussion 229
7.2 Commonly used power correction devices 230
7.3 Equipment procurement specifications 246
7.4 Equipment and material specifications 259
7.5 Verification testing 262
7.6 Equipment maintenance 264
7.7 Distribution power quality solutions/customer power products 267
7.8 Bibliography 271

Chapter 8
Recommended design/installation practices 273

8.1 Introduction 273
8.2 Equipment room wiring and grounding 275
8.3 Electrical power system selection considerations 275
8.4 Equipment selection and installation considerations 286
8.5 Grounding considerations 307
8.6 Lightning/surge protection considerations 337
8.7 380–480 Hz systems 342
8.8 References 345
8.9 Bibliography 347

Copyright by the Institute Of Electrical & Electronics Engineers Inc
Fri Jul 20 10:33:13 2001

Chapter 9
Telecommunications and distributed computing 349

9.1 Introduction 349
9.2 Nomenclature 349
9.3 Scope 350
9.4 General 350
9.5 Recommended practices 351
9.6 Recommended power and grounding topologies 353
9.7 Industry guidelines 356
9.8 General compliance 357
9.9 Powering and grounding telecommunications and distributed computing systems 357
9.10 Isolated ground receptacle (IGR) 357
9.11 Power 357
9.12 References 362
9.13 Bibliography 362

Annex 9A (informative) List of telecommunications industry guidelines 363

Chapter 10
Case histories 377

10.1 General discussion 377
10.2 Typical utility-sourced power quality problems 377
10.3 Premises switching generated surges 380
10.4 Electronic loads 381
10.5 Premises-wiring-related problems 384
10.6 Transient voltage surge suppression network design—
primary and secondary n etwork design 392
10.7 Typical radiated EMI problems 392
10.8 Typical electrical inspection problems 393
10.9 Typical life-safety system problems 394
10.10 Typical misapplication of equipment problems 395
10.11 References 395
10.12 Bibliography 395

Index 397

Copyright by the Institute Of Electrical & Electronics Engineers Inc
Fri Jul 20 10:33:14 2001

IEEE Recommended Practice for Powering and Grounding Electronic Equipment

Chapter 1
Overview

1.1 Scope

This recommended practice presents recommended engineering principles and practices for powering and grounding electronic equipment in commercial and industrial applications.

The scope of this document is limited to recommended design, installation, and maintenance practices for electrical power and grounding (including both power-related and signal-related noise control) of electronic processing equipment used in commercial and industrial applications.

1.2 Purpose

The main objective is to provide a consensus of recommended practices in an area where conflicting information and confusion, stemming primarily from different viewpoints of the same problem, have dominated. Practices herein address electronic equipment performance issues while maintaining a safe installation, as specified in the National Electrical Code® (NEC®) (NFPA 70-1999) [B1][1] and recognized testing laboratories' standards. This recommended practice is not intended to replace or to take precedence over any codes or standards adopted by the jurisdiction where the installation resides.

1.3 Background

As electronic loads proliferate in industrial and commercial power systems, so do problems related to power quality. Powering and grounding electronic equipment has been a growing concern for commercial and industrial power system designers. This concern frequently materializes after start-up, when electronic system-operating problems begin to occur. Efforts to alleviate these problems have ranged from installing power conditioning equipment to applying special grounding techniques that are not found in conventional safe grounding practice. Grasping for conditioning equipment or "magic" grounding methods is a common response. In some cases this approach has led to unsafe practices and violations of the NEC,

[1]The numbers in brackets correspond to those of the bibliography in 1.5.

Copyright © 1999 IEEE. All rights reserved.

Copyright by the Institute Of Electrical & Electronics Engineers Inc
Fri Jul 20 10:33:15 2001

without solving operating problems. In response to this situation, this recommended practice attempts to provide an understanding of the fundamentals of powering and grounding electronic equipment and the various types of problems that can arise.

The concept of load and source compatibility is not new. The need to provide power with steady voltage and frequency has been recognized since the inception of the electric utility industry. However, the definition of *steady* has changed over the years, reflecting the different susceptibility of electronic equipment to the departure from *steady* conditions. Some of the early concerns were flicker of light bulbs due to voltage variations, and overheating of electromagnetic loads or interference of communication loads due to voltage waveform distortion. Recognition of these problems led to the development of voluntary standards that contributed significantly to reducing occurrences.

More recently, transient voltage disturbances associated with short circuits, lightning, and power system switching have emerged as a major concern to manufacturers and users of electronic equipment. The issue of grounding, and particularly how to deal with noise and safety simultaneously, is complicated by conflicting philosophies advocated by people of different backgrounds. Power-oriented engineers and signal-oriented engineers often differ in their perception of the problem and potential solutions.

Since the earliest days of electric power, users have desired that utilities provide electricity without interruptions, surges, or harmonic waveform distortions. Reducing such power line disturbances has always been a concern for utilities. Recently, however, new sources of disturbances have begun to proliferate, just as many loads are becoming more sensitive to these same power disturbances. Some of these disturbances are generated by adjacent equipment and by inadequate wiring and grounding practices. These developments have presented utilities and users with a new set of complex power quality issues that require wide-reaching cooperative efforts in order to be resolved.

Today's complaints about the quality of power are not easily resolved because they involve both a multitude of different causes and a variety of specific sensitivities in the affected equipment. A commonly applied solution to power incompatibilities is to install interface equipment between commercial power and sensitive loads. Difficulties in assessing the need to apply power interface equipment include

a) The inability to quantify precisely how much downtime is power related; and

b) The subjective nature of estimating the cost of sensitive load misoperation that is attributable to power line disturbance.

The cost/benefit aspects of the problem can be addressed from a technical point of view in standards, but detailed economic analysis and specific decisions remain the prerogative of the user. Power system designers, utility companies, and manufacturers of electronic equipment need to cooperate with each other to find effective solutions to reduce the potential sources of interference, reduce the susceptibility of the load equipment, or apply power conditioning equipment.

 Copyright © 1999 IEEE. All rights reserved.

Copyright by the Institute Of Electrical & Electronics Engineers Inc
Fri Jul 20 10:33:15 2001

As in the past, voluntary consensus standards are also needed. Focusing on the technical issues, dispelling misconceptions, and recommending sound practices can assist the user in making informed economic decisions. Two of the goals of this recommended practice are to promote a better understanding of the significant issues and to dispel misconceptions.

Fortunately, powering and grounding an electronic system is fundamentally the same as any electrical system. Estimating the load, matching current and voltage requirements, or planning for future growth involves the same basic information. Similarly, designing an appropriate electrical distribution system, selecting and coordinating overcurrent protection, and assuring voltage regulation makes use of the same engineering practices. Even the principles of grounding for safety can be applied to electronic loads in the same way as to any other load.

The *IEEE Color Book Series* is an excellent reference library available for designing commercial and industrial power systems of all types. Each Color Book provides recommended practices in a specific subject area. The objective is to assist in the design of safe, reliable, and economical electric power systems by providing the consensus of knowledge and experience of the contributing IEEE members. The *IEEE Emerald Book* is directed specifically at powering and grounding electronic equipment.

1.4 Text organization

The following chapter descriptions provide the reader with a road map of this recommended practice.

Chapter 2 provides definitions of the terms that pertain to power quality issues and that are generally not otherwise available in IEEE standards. A description and a definition of power disturbances are included. Also provided is a list of terms that have been deliberately avoided in this recommended practice because they have several different meanings and no generally accepted single technical definition.

Chapter 3 provides general needs guidelines. This chapter is intended to identify the relevant codes and standards, as well as the existing electrical environments to which equipment is typically subjected. These guidelines are established as a basis for the treatment of instrumentation, site surveys, selection of equipment, and recommended practices in subsequent chapters.

Chapter 4 introduces the reader to the fundamental concepts necessary for understanding and applying recommended practices for the design of a compatible and essentially hazard-free interconnection to the power system. Fundamentals not unique to electronic and electrical equipment are treated lightly, or by reference to other standards.

Chapter 5 presents information on available measurement instruments that are useful for investigating and diagnosing problems in power systems that serve electronic equipment.

Chapter 6 covers site power analyses and site surveys. This chapter presents the fundamentals of how to conduct a site survey for problem identification and diagnosis. The recom-

Copyright © 1999 IEEE. All rights reserved.

Copyright by the Institute Of Electrical & Electronics Engineers Inc
Fri Jul 20 10:33:16 2001

mended approach is to start with wiring and grounding checks and progress through voltage disturbance measurements to harmonic analysis.

Chapter 7 (formerly Chapter 8) presents the myriad of available power enhancement equipment from the points of view of basic technology, performance, and function. Specification, performance verification, and maintenance are also covered.

Chapter 8 (formerly Chapter 9) covers the recommended design and installation practices for powering and grounding electronic equipment. The intent is to present the Working Group's collective engineering experience and judgment of effective practices.

Chapter 9 is a new addition to IEEE Std 1100-1999 and covers the recommended design and installation practices peculiar to the powering and grounding of distributed computer systems and telecommunications equipment. The chapter makes extensive use of existing industry standards, such as ANSI T1 standards, and industry specifications, such as those by Bellcore and BICSI.

Chapter 10 (formerly Chapter 7) presents case histories. These case studies provide examples of real-world performance and safety problems that have been encountered in the field. Cases that are presented illustrate the need to follow specific recommended practices, and indicate potential results when recommended practices are not followed.

1.5 Bibliography

Additional information may be found in the following source:

[B1] NFPA 70-1999, National Electrical Code® (NEC®).[2]

[2]The NEC is published by the National Fire Protection Association, Batterymarch Park, Quincy, MA 02269, USA (http://www.nfpa.org/). Copies are also available from the Institute of Electrical and Electronics Engineers, 445 Hoes Lane, P.O. Box 1331, Piscataway, NJ 08855-1331, USA (http://www.standards.ieee.org/).

 Copyright © 1999 IEEE. All rights reserved.

Copyright by the Institute Of Electrical & Electronics Engineers Inc
Fri Jul 20 10:33:17 2001

Chapter 2
Definitions

2.1 Introduction

The electronic power community is pervaded by terms that have no scientific definition. One of the purposes of this chapter is to eliminate the use of those words. Another purpose is to define those terms that aid in the understanding of concepts within this recommended practice.

Where possible, definitions were obtained from IEEE Std 100-1996.[1] The second choice was to use other appropriate sources, and the final choice was to use a new definition that conveys a common understanding for the word as used in the context of this recommended practice.

The remainder of this chapter is divided into three parts. First, an alphabetical listing of definitions is provided in 2.2. The reader is referred to IEEE Std 100-1996 for all words not listed herein. The second part (2.3) lists those terms that have been deliberately avoided in this document because of no generally accepted single technical definition. These words find common use in discussing distribution-related power problems, but tend not to convey significant technical meaning. The third part (2.4) lists abbreviations that are employed throughout this recommended practice.

2.2 Alphabetical listing of terms

The primary source for the definitions in this clause is IEEE Std 100-1996. This clause does not include any device or equipment definitions (e.g., isolation transformers and uninterruptible power systems); the reader is advised to refer to the index. Most pertinent equipment is described in Chapter 7.

2.2.1 bonding: **(A)** The electrical interconnecting of conductive parts, designed to maintain a common electrical potential [see the National Electrical Code® (NEC®) (NFPA 70-1999)]. **(B)** The permanent joining of metallic parts to form an electrically conductive path that will assure electrical continuity and the capacity to conduct safely any current likely to be imposed. (See the NEC.)

2.2.2 bonding network, common (CBN): **(A)** The principal means for affecting bonding and earthing inside a building. **(B)** The set of metallic components that are intentionally or incidentally interconnected to form the (earthed) bonding network (a mesh) in a building. These components include structural steel or reinforcing rods, metallic plumbing, ac power conduit, equipment grounding conductors, cable racks, and bonding conductors. The CBN always has a mesh topology and is connected to the grounding electrode system. *Note:* The CBN may also be known in the public telephone network as an integrated ground plane.

[1]Information on references can be found in 2.5.

Copyright © 1999 IEEE. All rights reserved.

Copyright by the Institute Of Electrical & Electronics Engineers Inc
Fri Jul 20 10:33:18 2001

2.2.3 bonding network, isolated (IBN): **(A)** A bonding network that has a single point of connection (single-point ground) to either the common bonding network (CBN) or another isolated bonding network. **(B)** Typically a system-level grounding topology used by the original equipment manufacturer (OEM) to desensitize its equipment to suspected or known site environmental issues such as power fault and surge, lightning, and grounding potential rise. The IBN requires the use of a single-point connection location (also known in the telephone industry as a *ground window*) to interface the rest of the building metallics (the CBN). The IBN should not be confused with the isolated grounding receptacle (IGR) circuit discussed in Section 250-146(d) of the NEC. *Note:* The IBN may also be known in the public telephone network as an *isolated ground plane.*

2.2.4 commercial power: Power furnished by an electric power utility company.

2.2.5 common-mode noise (longitudinal): The noise voltage that appears equally, and in phase, from each current carrying conductor to ground. *Note:* For the purposes of this recommended practice, this abbreviated definition extends the existing definition in IEEE Std 100-1996 (previously given only for signal cables) to the power conductors supplying electronic equipment.

2.2.6 coupling: The association of two or more circuits or systems in such a way that power or signal information may be transferred from one system or circuit to another.

2.2.7 crest factor (of a periodic function): The ratio of the peak value of a periodic function (y_{peak}) to the rms value (y_{rms}); $cf = y_{peak}/y_{rms}$.

2.2.8 critical load: Devices and equipment whose failure to operate satisfactorily jeopardizes the health or safety of personnel, and/or results in loss of function, financial loss, or damage to property deemed critical by the user. *Note:* This definition refers to function of the device, whereas the IEEE Std 100-1996 definition links the device to the quality of its power supply.

2.2.9 customer premises equipment (CPE): Any equipment connected by customer premises wiring to the customer side of the demarcation point (network interface). (See ANSI T1.318-1994.)

2.2.10 degradation failure: *See:* **failure, degradation.**

2.2.11 differential-mode noise: *See:* **transverse-mode noise.**

2.2.12 direct-reading ammeters: Ammeters that employ a shunt and are connected in series and carry some of the line current through them for measurement purposes. They are part of the circuit being measured.

2.2.13 displacement power factor: *See:* **power factor, displacement.**

2.2.14 distortion factor: The ratio of the root square value of the harmonic content to the root square value of the fundamental quantity, expressed as a percent of the fundamental. *Note:* Also referred to as *total harmonic distortion.* (See IEEE Std 519-1992.)

 Copyright © 1999 IEEE. All rights reserved.

Copyright by the Institute Of Electrical & Electronics Engineers Inc
Fri Jul 20 10:33:19 2001

2.2.15 dropout: A loss of equipment operation (discrete data signals) due to noise, voltage sags, or interruption. (See IEEE Std 1159-1995.)

2.2.16 dropout voltage: The voltage at which a device will revert to its de-energized position, i.e., the voltage at which a device fails to operate.

2.2.17 earth, remote: The point beyond which further reduction in ground electrode or grid impedance results in negligible effects. (See ANSI T1.318-1994.)

2.2.18 efficiency: The output real power divided by the input real power.

2.2.19 equipment grounding conductor: The conductor used to connect the non-current-carrying parts of conduits, raceways, and equipment enclosures to the grounding electrode at the service equipment (main panel) or secondary of a separately derived system (e.g., isolation transformer). *Note:* This term is defined more specifically in Section 100 of the NEC.

2.2.20 failure, degradation: Failure that is both gradual and partial. *Note:* In time, such a failure may develop into a complete failure.

2.2.21 failure mode: The effect by which a failure is observed to occur.

2.2.22 flicker: A variation of input voltage, either magnitude or frequency, sufficient in duration to allow visual observation of a change in electric light source intensity.

2.2.23 foreign potential: Any voltage and resultant current imposed on telecommunications plant or equipment that is not supplied from the central office or from telecommunications equipment.

2.2.24 form factor (periodic function): The ratio of the root square value to the average absolute value, averaged over a full period of the function.

2.2.25 forward transfer impedance: An attribute similar to internal impedance of a power source, but at frequencies other than the nominal (e.g., 60 Hz power frequency). Knowledge of the forward transfer impedance allows the designer to assess the capability of the power source to provide load current (at the harmonic frequencies) needed to preserve a good output voltage waveform. Generally, the frequency range of interest is 60 Hz to 3 kHz for 50 to 60 Hz power systems, and 20 to 25 kHz for 380 to 480 Hz power systems.

2.2.26 frequency deviation: An increase or decrease in the power frequency from nominal. The duration of a frequency deviation can be from several cycles to several hours. *Note:* The IEEE Std 100-1996 definition is "system frequency minus the scheduled frequency."

2.2.27 ground: **(A)** A conducting connection, whether intentional or accidental, by which an electric circuit or equipment is connected to the earth, or to some conducting body of relatively large extent that serves in place of the earth. **(B)** High-frequency reference. *Note:* Grounds are used for establishing and maintaining the potential of the earth (or of the conducting body), or approximately that potential, on conductors connected to it and for conducting

Copyright © 1999 IEEE. All rights reserved.

Copyright by the Institute Of Electrical & Electronics Engineers Inc
Fri Jul 20 10:33:20 2001

ground currents to and from earth (or the conducting body). *See also:* **signal reference structure.**

2.2.28 ground electrode: A conductor or group of conductors in intimate contact with the earth for the purpose of providing a connection with the ground. (See the NEC.)

2.2.29 ground electrode, concrete-encased: Also known as a *ufer ground.* A grounding electrode completely encased within concrete, located within, and near the bottom of, a concrete foundation or footing or pad, that is in direct contact with the earth. *Note:* This term is defined more specifically in Article 250 of the NEC.

2.2.30 ground grid: A system of interconnected bare conductors arranged in a pattern over a specified area on, or buried below, the surface of the earth. Normally, it is bonded to ground rods driven around and within its perimeter to increase its grounding capabilities and provide convenient connection points for grounding devices. The primary purpose of the ground grid is to provide safety for workmen by limiting potential differences within its perimeter to safe levels in case of high currents that could flow if the circuit being worked on became energized for any reason, or if an adjacent energized circuit faulted. Metallic surface mats and gratings are sometimes utilized for this same purpose. *Note:* This term should not be used when referring to a signal reference structure, which is defined in this clause.

2.2.31 ground impedance tester: A multifunctional instrument designed to detect certain types of wiring and grounding problems in low-voltage power distribution systems.

2.2.32 grounding conductor (telecommunications), direct current equipment (DCEG): The conductor used to connect the metal parts of equipment, raceways, and other enclosures to the system grounded conductor (battery return), the conductor providing the system ground reference, or both, at the source of a direct current system (dc power plant).

2.2.33 ground loop: A potentially detrimental loop formed when two or more points in an electrical system that are nominally at ground potential are connected by a conducting path such that either or both points are not at the same ground potential.

2.2.34 ground potential shift: The difference in voltage between grounding or grounded (earthed) structures such as the opposite corners of a metal building. Generally, ground potential shift increases with distance of separation of ground locations and with the frequency or wave front rise time of the resulting current flow. Ground potential shift problems are generally exacerbated by surge events from lighting and utility power sources.

2.2.35 ground, radial: A conductor connection by which separate electrical circuits or equipment are connected to earth at one point. Sometimes referred to as a *star ground.*

2.2.36 ground, ufer: *See:* **ground electrode, concrete-encased.**

2.2.37 ground window: The area through which all grounding conductors, including metallic raceways, enter a specific area. It is often used in communications systems through which

 Copyright © 1999 IEEE. All rights reserved.

Copyright by the Institute Of Electrical & Electronics Engineers Inc
Fri Jul 20 10:33:21 2001

the building grounding system is connected to an area that would otherwise have no grounding connection.

2.2.38 harmonic distortion: The mathematical representation of the distortion of the pure sine waveform. *See also:* **distortion factor** and Figure 2-1.[2]

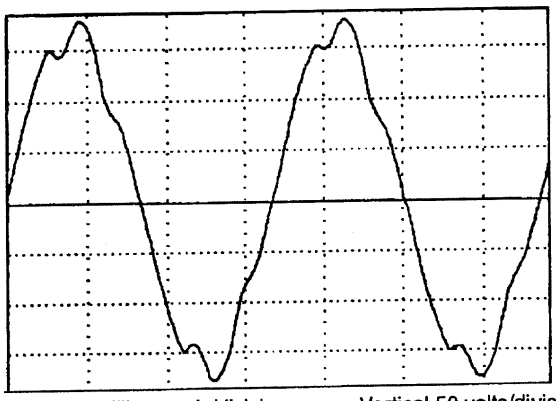

Horizontal 5 milliseconds/division Vertical 50 volts/division

Source: The Dranetz Field Handbook [B3].

Figure 2-1—Distortion example

2.2.39 impulse: *See:* **transient.**

2.2.40 input power factor (of a system): The ratio at the input of active power (measured in watts or kilowatts) to input apparent power (measured in volt-amperes or kilovolt-amperes) at rated or specified voltage and load. *See also:* **power factor, displacement; power factor, total.**

2.2.41 input voltage range (of a power system): The range of input voltage over which the system can operate properly. (See ANSI C84.1-1995.)

2.2.42 inrush: The amount of current that a load or device draws when first energized.

2.2.43 interruption: The complete loss of voltage for a time period.

2.2.43.1 interruption, momentary (power quality monitoring): **(A)** A type of short duration variation. **(B)** The complete loss of voltage (< 0.1 pu) on one or more phase conductors for a time period between 0.5 cycles and 3 s. (See IEEE Std 1159-1995.)

[2]The numbers in brackets in the source for Figure 2-1 correspond to those of the bibliography in 2.6.

Copyright © 1999 IEEE. All rights reserved.

Copyright by the Institute Of Electrical & Electronics Engineers Inc
Fri Jul 20 10:33:22 2001

2.2.43.2 interruption, sustained (power quality monitoring): The complete loss of voltage for a time period greater than 1 min.

2.2.43.3 interruption, temporary (power quality monitoring): **(A)** A type of short-duration variation. **(B)** The complete loss of voltage (< 0.1 pu) on one or more phase conductors for a time period between 3 s and 1 min. (See IEEE Std 1159-1995.)

2.2.44 isolated equipment ground: An isolated equipment grounding conductor runs in the same conduit or raceway as the supply conductors. This conductor is insulated from the metallic raceway and all ground points throughout its length. It originates at an isolated-ground-type receptacle or equipment input terminal block and terminates at the point where neutral and ground are bonded at the power source. *Note:* This term is defined more specifically in Sections 250-96(b) and 250-146(d) of the NEC.

2.2.45 isolation: Separation of one section of a system from undesired influences of other sections.

2.2.46 linear load: A load that draws a sinusoidal current wave when supplied by a sinusoidal voltage source.

2.2.47 noise, common-mode: *See:* **common-mode noise.**

2.2.48 noise, differential-mode: *See:* **transverse-mode noise.**

2.2.49 noise, electrical: Unwanted electrical signals that produce undesirable effects in the circuits of the control systems in which they occur. *Note:* For this recommended practice, *control systems* is intended to include electronic equipment in total or in part (see Figure 2-2).

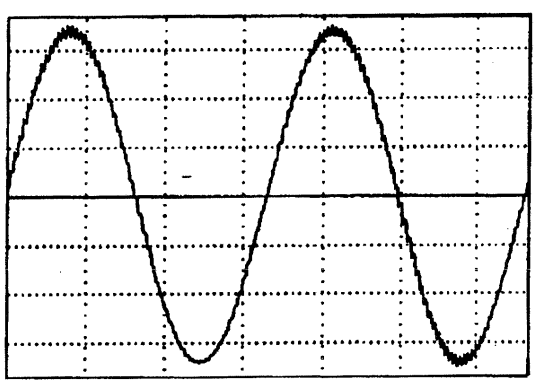

Horizontal 5 milliseconds/division Vertical 200 volts/division

Source: The Dranetz Field Handbook [B3].

Figure 2-2—Noise example

Copyright © 1999 IEEE. All rights reserved.

Copyright by the Institute Of Electrical & Electronics Engineers Inc
Fri Jul 20 10:33:23 2001

2.2.50 noise, normal-mode: *See:* **transverse-mode noise.**

2.2.51 noise, transverse-mode: *See:* **transverse-mode noise.**

2.2.52 nonlinear load: A load that draws a nonsinusoidal current wave when supplied by a sinusoidal voltage source. (See IEEE Std 519-1992.)

2.2.53 nonlinear load current: Load current that is associated with a nonlinear load. *See also:* **nonlinear load.**

2.2.54 notch: A switching (or other) disturbance of the normal power voltage waveform, lasting less than a half cycle; which is initially of opposite polarity than the waveform, and is thus subtractive from the normal waveform in terms of the peak value of the disturbance voltage. This includes complete loss of voltage for up to a half cycle. (See Figure 2-3.) *See also:* **transient.**

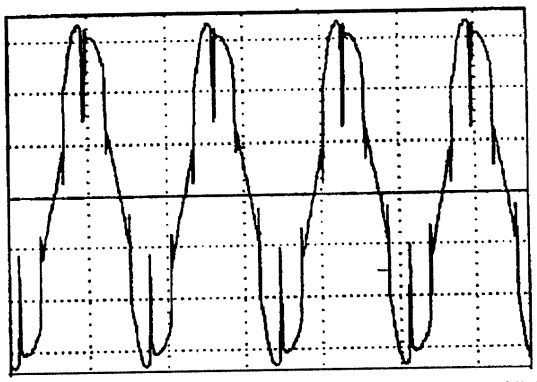

Horizontal 10 milliseconds/division Vertical 200 volts/division

Source: The Dranetz Field Handbook [B3].

Figure 2-3—Notches

2.2.55 output (reverse transfer) impedance (of a power source): Similar to forward transfer impedance, but it describes the characteristic impedance of the power source as seen from the load, looking back at the source. *See also:* **forward transfer impedance.**

2.2.56 overvoltage: When used to describe a specific type of long duration variation, refers to an RMS increase in the ac voltage, at the power frequency, for a period of time greater than 1 min. Typical values are 1.1–1.2 pu. *See also:* **swell; transient.** (See IEEE Std 1159-1995.)

2.2.57 pathway: A facility for the placement of telecommunications. (See TIA/EIA 607-1994.)

Copyright © 1999 IEEE. All rights reserved.

Copyright by the Institute Of Electrical & Electronics Engineers Inc
Fri Jul 20 10:33:24 2001

2.2.58 phase shift: The displacement between corresponding points on similar wave shapes, and is expressed in degrees leading or lagging.

2.2.59 power disturbance: Any deviation from the nominal value (or from some selected thresholds based on load tolerance) of the input ac power characteristics.

2.2.60 power disturbance monitor: Instrumentation developed specifically to capture power disturbances for the analysis of voltage and current measurements.

2.2.61 power factor, displacement: **(A)** The displacement component of power factor. **(B)** The ratio of the active power of the fundamental wave, in watts, to the apparent power of the fundamental wave, in volt-amperes.

2.2.62 power factor, total: The ratio of the total power input, in watts, to the total volt-ampere input. *Note:* This definition includes the effect of harmonic components of current and voltage and the effect of phase displacement between current and voltage.

2.2.63 power quality: The concept of powering and grounding electronic equipment in a manner that is suitable to the operation of that equipment and compatible with the premise wiring system and other connected equipment.

2.2.64 radial ground: *See:* **ground, radial.**

2.2.65 recovery time: Specifies the time needed for the output voltage or current to return to a value within the regulation specification after a step load or line change. (Clarification notes from IEEE Std 100-1996 are excluded.) *Note:* For this recommended practice, recovery time may also indicate the time interval required to bring a system back to its operating condition after an interruption or dropout.

2.2.66 safety ground: *See:* **equipment grounding conductor.**

2.2.67 sag: An rms reduction in the ac voltage, at the power frequency, for durations from a half cycle to a few seconds. (See Figure 2-4.) *Note:* The IEC terminology is *dip. See also:* **notch; undervoltage.**

2.2.68 shield: Braid copper, metallic sheath, or metallic-coated polyester tape (usually copper or aluminum) applied over the insulation of a conductor or conductors for the purpose of reducing electrostatic coupling between the shielded conductors and others that may be either susceptible to, or generators of, electrostatic fields (noise). When electromagnetic shielding is intended, the term *electromagnetic* is usually included to indicate the difference in shielding requirement and material.

 Copyright © 1999 IEEE. All rights reserved.

Copyright by the Institute Of Electrical & Electronics Engineers Inc
Fri Jul 20 10:33:25 2001

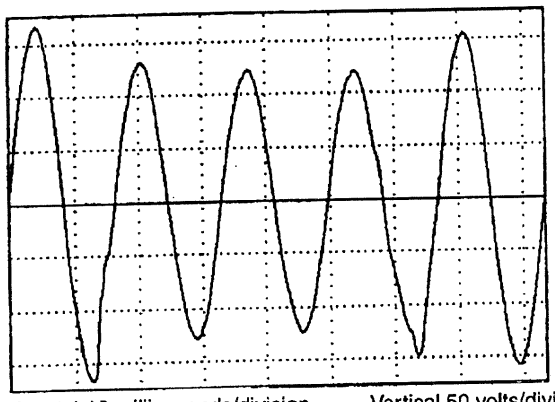

Horizontal 10 milliseconds/division Vertical 50 volts/division

Source: The Dranetz Field Handbook [B3].

Figure 2-4—Sag

2.2.69 shielding: The process of applying a conducting barrier between a potentially disturbing noise source and electronic circuitry. Shielding is used to protect cables (data and power) and electronic circuits. Shielding may be accomplished by the use of metal barriers, enclosures, or wrappings around source circuits and receiving circuits.

2.2.70 signal reference structure: A system of conductive paths among interconnected equipment that reduces noise-induced voltages to levels that minimize improper operation. Common configurations include grids and planes.

2.2.71 slew rate: Rate of change of (ac voltage) frequency.

2.2.72 star ground: *See:* **ground, radial.**

2.2.73 star-connected circuit: A polyphase circuit in which all the current paths of the circuit extend from a terminal of entry to a common terminal or conductor (which may be the neutral conductor). *Note:* In a three-phase system this is sometimes called a Y (or wye) connection.

2.2.74 surge: *See:* **transient.**

2.2.75 surge protective device (SPD): A device that is intended to limit transient overvoltages and divert surge currents. It contains at least one nonlinear component.

2.2.76 surge reference equalizer: A surge protective device used for connecting equipment to external systems whereby all conductors connected to the protected load are routed, physically and electrically, through a single enclosure with a shared reference point between the input and output ports of each system.

Copyright © 1999 IEEE. All rights reserved.

Copyright by the Institute Of Electrical & Electronics Engineers Inc
Fri Jul 20 10:33:26 2001

2.2.77 surge suppressor: A device operated in conformance with the rate of change of current, voltage, power, etc., to prevent the rise of such quantity above a predetermined value.

2.2.78 swell: An increase in rms voltage or current at the power frequency for durations from 0.5 cycle to 1.0 min. Typical values are 1.1–1.8 pu. (See IEEE Std 1159-1995.) (See also Figure 2-5.)

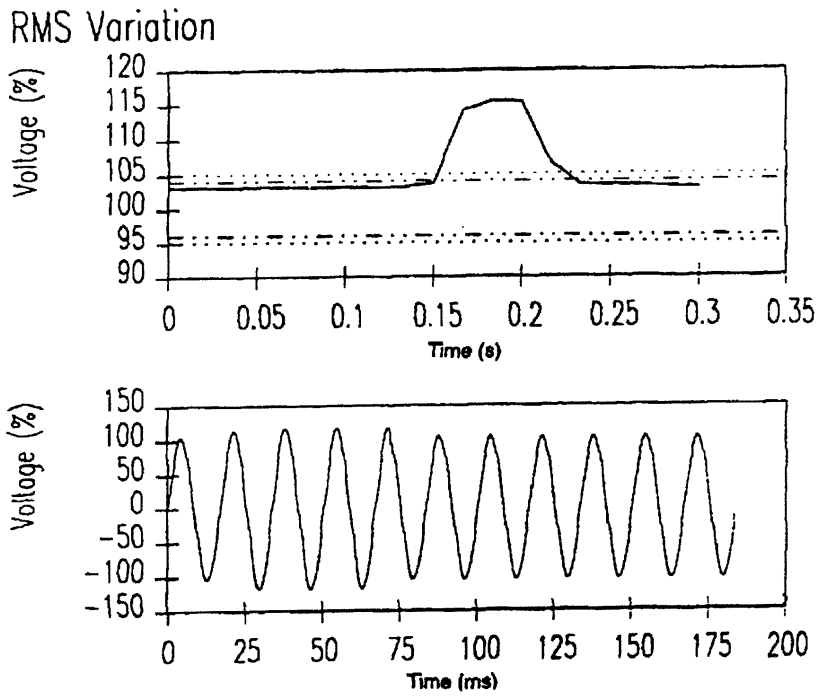

Source: IEEE Std 1159-1995.

Figure 2-5—Swells occurring upon recovery from a remote system fault

2.2.79 telecommunications: Any transmission, emission, and reception of signs, signals, writings, images, and sounds, i.e., information of any nature by cable, radio, optical, or other electromagnetic systems. (See TIA/EIA 607-1994.)

2.2.80 telecommunications equipment room (TER): A centralized space for telecommunications equipment that serves the occupants of the building.

2.2.81 total harmonic distortion (THD): *See:* **distortion factor.**

2.2.82 transfer time (uninterruptible power supply): The time that it takes an uninterruptible power supply to transfer the critical load from the output of the inverter to the alternate source, or back again.

Copyright © 1999 IEEE. All rights reserved.

Copyright by the Institute Of Electrical & Electronics Engineers Inc
Fri Jul 20 10:33:26 2001

2.2.83 transient: A subcycle disturbance in the ac waveform that is evidenced by a sharp, brief discontinuity of the waveform. May be of either polarity and may be additive to, or subtractive from, the nominal waveform. *See also:* **notch; overvoltage; swell.**

2.2.84 transient voltage surge suppressor (TVSS): A device that functions as a surge protective device (SPD) or surge suppressor.

2.2.85 transverse-mode noise (with reference to load device input ac power): Noise signals measurable between or among active circuit conductors feeding the subject load, but not between the equipment grounding conductor or associated signal reference structure and the active circuit conductors.

2.2.86 unbalanced load regulation: A specification that defines the maximum voltage difference between the three output phases that will occur when the loads on the three are of different levels.

2.2.87 undervoltage: When used to describe a specific type of long duration variation, refers to an RMS decrease in the ac voltage, at the power frequency, for a period of time greater than 1 min. Typical values are 0.8–0.9 pu. (See IEEE Std 1159-1995.)

2.2.88 voltage distortion: Any deviation from the nominal sine waveform of the ac line voltage.

2.2.89 voltage regulation: The degree of control or stability of the rms voltage at the load. Often specified in relation to other parameters, such as input voltage changes, load changes, or temperature changes.

2.3 Words avoided

The following words have a varied history of usage, and some may have specific definitions for other applications. It is an objective of this recommended practice that the following ambiguous words not be used to generally describe problem areas nor solutions associated with the powering and grounding of electronic equipment:

- Blackout
- Brownout
- Clean ground
- Clean power
- Computer grade ground
- Conducting barriers
- Dedicated ground
- Dirty ground
- Dirty power
- Equipment safety grounding conductor

Copyright © 1999 IEEE. All rights reserved.

Copyright by the Institute Of Electrical & Electronics Engineers Inc
Fri Jul 20 10:33:27 2001

— Frame ground
— Frequency shift
— Glitch
— Natural electrodes
— Power surge
— Raw power
— Raw utility power
— Shared circuits
— Shared ground
— Spike
— Subcycle outages
— Type I, II, III power disturbances

2.4 Abbreviations and acronyms

The following abbreviations are utilized throughout this recommended practice:

ALVRT	automatic line voltage regulating transformer
ASAI	average service availability index
ASD	adjustable speed drive
CAD	computer-aided design
CATV	cable accessed television
CBEMA	Computer and Business Equipment Manufacturers Association
CBN	common bonding network
CEA	Canadian Electrical Association
CG	cloud to ground
CMR	common-mode rejection
COTC	central office trunk cable
CPC	computer power center
CPE	customer premises equipment
CPU	central processing unit

 Copyright © 1999 IEEE. All rights reserved.

Copyright by the Institute Of Electrical & Electronics Engineers Inc
Fri Jul 20 10:33:28 2001

CRT	cathode-ray tube
CT	current transformer
CVT	constant voltage transformer
DCEG	direct current equipment grounding conductor (telecommunications)
DVR	dynamic voltage restorer
EFT	electrical fast transient
EGC	equipment grounding conductor
EMC	electromagnetic compatibility
EMI	electromagnetic interference
EMT	electrical metallic tubing
EPRI	Electric Power Research Institute
ESD	electrostatic discharge
FCC	Federal Communication Commission
FFT	fast Fourier transform
FMC	flexible metal conduit
GTO	gate turn-off
HF	high frequency
IBN	isolated bonding network
IEC	International Electrotechnical Commission
IG	isolated/insulated grounding
IGR	isolated grounding receptacle
IMC	intermediate metal conduit
IT	information technology
ITC	Information Technology Industry Council
ITE	information technology equipment

Copyright © 1999 IEEE. All rights reserved.

Copyright by the Institute Of Electrical & Electronics Engineers Inc
Fri Jul 20 10:33:29 2001

LDC	line drop compensator
MCT	metal cable tray
M-G	motor-alternator/generator
MTBF	mean time between failures
NEC	National Electrical Code
NEMA	National Electrical Manufacturers Association
NEMP	nuclear electromagnetic pulse
NIST	National Institute of Standards and Technology
NPL	National Power Laboratory
NRTL	nationally recognized testing laboratory
OEM	original equipment manufacturer
OSHA	Occupational Safety and Health Administration
PABX	private automatic branch exchange
PC	personal computer
PCC	point of common coupling
PDU	power distribution unit
PQ	power quality
PTN	public telephone network
PWM	pulse-width modulation
RFI	radio-frequency interference
RMC	rigid metal conduit
RMS	root mean square
SCR	silicon-controlled rectifier
ScTP	screened twisted pair
SDS	separately derived ac system

Copyright © 1999 IEEE. All rights reserved.

Copyright by the Institute Of Electrical & Electronics Engineers Inc
Fri Jul 20 10:33:29 2001

SE	service entrance
SMPS	switched mode power supply
SPD	surge protective device
SPG	single-point ground
SRGG	signal reference ground grid
SRGP	signal reference ground plane
SRP	signal reference plane
SRS	signal reference structure
SSB	solid-state circuit breaker
SSTS	solid-state transfer switch
STATCON	static condenser
Telco	telephone company
TER	telecommunications equipment room
THD	total harmonic distortion
TIA	Telecommunications Industry Association
TTE	telephone terminal equipment
TVSS	transient voltage surge suppressor
UL	Underwriters Laboratories
UPS	uninterruptible power supply
UTP	unshielded twisted pair
VDT	video display terminal
VFD	variable-frequency speed drive

Copyright © 1999 IEEE. All rights reserved.

Copyright by the Institute Of Electrical & Electronics Engineers Inc
Fri Jul 20 10:33:30 2001

2.5 References

This recommended practice shall be used in conjunction with the following publications. When the following standards are superseded by an approved revision, the revision shall apply.

ANSI C84.1-1995, American National Standard for Electric Power Systems and Equipment—Voltage Ratings (60 Hz).[3]

ANSI T1.318-1994, American National Standard for Telecommunications—Electrical Protection Applied to Telecommunications Network Plant at Entrances to Customer Structures or Buildings.

IEEE Std 100-1996, IEEE Standard Dictionary of Electrical and Electronics Terms.[4]

IEEE Std 142-1991, IEEE Recommended Practice for Grounding of Industrial and Commercial Power Systems (*IEEE Green Book*).

IEEE Std 519-1992, IEEE Recommended Practice for Harmonic Control in Electric Power Systems.

IEEE Std 1159-1995, IEEE Recommended Practice for Monitoring Electric Power Quality.

IEEE Surge Protection Standards Collection (C62), 1995 Edition.

NFPA 70-1999, National Electrical Code® (NEC®).[5]

TIA/EIA 607-1994, Commercial Building Grounding/Bonding/Requirement Standard.[6]

2.6 Bibliography

Additional information may be found in the following sources:

[B1] IEEE Std C62.41-1991, IEEE Recommended Practice on Surge Voltages in Low-Voltage AC Power Systems.

[3]ANSI publications are available from the Sales Department, American National Standards Institute, 11 West 42nd Street, 13th Floor, New York, NY 10036, USA (http://www.ansi.org/).

[4]IEEE publications are available from the Institute of Electrical and Electronics Engineers, 445 Hoes Lane, P.O. Box 1331, Piscataway, NJ 08855-1331, USA (http://www.standards.ieee.org/).

[5]The NEC is published by the National Fire Protection Association, Batterymarch Park, Quincy, MA 02269, USA (http://www.nfpa.org/). Copies are also available from the Institute of Electrical and Electronics Engineers, 445 Hoes Lane, P.O. Box 1331, Piscataway, NJ 08855-1331, USA (http://www.standards.ieee.org/).

[6]EIA publications are available from Global Engineering, 15 Inverness Way East, Englewood, CO 80112-5704, USA, tel. (303) 792-2181 (http://global.ihs.com/).

Copyright © 1999 IEEE. All rights reserved.

Copyright by the Institute Of Electrical & Electronics Engineers Inc
Fri Jul 20 10:33:31 2001

[B2] McEachern, Alexander, *Handbook of Power Signatures,* Foster City, CA: Basic Measuring Instruments, 1989.

[B3] *The Dranetz Field Handbook for Power Quality Analysis,* Edison, NJ: Dranetz Technologies Inc., 1991.

Copyright © 1999 IEEE. All rights reserved.

Copyright by the Institute Of Electrical & Electronics Engineers Inc
Fri Jul 20 10:33:32 2001

Chapter 3
General needs guidelines

3.1 Introduction

The need to provide reliable power with a steady voltage and frequency has been recognized since the inception of the electric utility industry. However, the engineering reality of a large power system is that disturbances are unavoidable. These disturbances in the quality of power delivered can occur during the normal operation of the electric power system, like switching of a power factor correction device, or during abnormal events, like clearing a feeder short circuit. Depending on end-user equipment or process immunity, damage, operational upset, or no effect may be the result. An incompatibility may be corrected at the utility, at the equipment, or by adding some power conditioning in between, and blame is difficult to place. This dichotomy may be a source of misunderstandings, at best, or a source of disputes, at worst, between suppliers and users of electric power, and between manufacturers and users of susceptible sensitive equipment. One of the goals of this recommended practice is to promote better understanding of the significant compatibility issues and to dispel some misconceptions about how to avoid or correct problems of incompatibility.

This chapter presents a brief description of the nature of power quality problems, of possible solutions, and of the resources available for dealing with these problems. A brief historical review of the evolution of interest in power quality and resolution of some of the earlier conflicts provides a perspective on solving today's problems.

3.1.1 Historical perspective

As public expectations of uniform lighting intensity grew and as more manufacturers began to use electric motors to drive production lines, utilities adopted stricter standards for voltage regulation. During the 1930s, utilities also found that they had to pay increasing attention to voltage disturbances caused by customer equipment on their distribution lines. Research showed that flicker in incandescent lamps caused by voltage fluctuations could be perceived even if the pulsation on the power line was only a third of a volt on a 120 V system. This type of problem led to an increasing number of industry standards for end-use equipment aimed at reducing voltage fluctuations sent back along a power line.

A somewhat different problem arose during the 1950s as air conditioners rapidly became popular. When early models were switched on, so much energy was used to get their compressors started that the incoming line voltage was temporarily reduced and the motors often could not reach operating speed, ran poorly, or stalled. Fortunately, in this case, a remedy was readily available—adding power-factor correction capacitors in the system.

The reason why today's complaints about the quality of power cannot be handled so simply is that they seem to reflect both a multitude of different causes and a variety of specific sensitivities in the customer equipment most affected. Just as the air conditioner problems were eventually solved by a coordinated effort among affected parties, so too can new standards

Copyright © 1999 IEEE. All rights reserved.

Previous page is blank

Copyright by the Institute Of Electrical & Electronics Engineers Inc
Fri Jul 20 10:33:33 2001

on equipment and on levels of permissible voltage distortions help guide the design and application of both sensitive electronic equipment and heavy-duty apparatus. Such standards will have to be applied much more selectively than in the past, however, and address a much more complex set of issues.

3.1.2 Proliferation of power electronic equipment

The advent of electronic power conversion has been widely applauded by users, but the drawbacks from the point of view of power quality have not always been recognized. The very advantages of solid-state devices that made possible modern switching power supplies, inverter-rectifiers, high-frequency induction heating, and adjustable-speed drives also make these power converters into generators of harmonic currents and additional sources of line-voltage drops. Thus, in addition to the disturbances generated by the normal operation of the familiar power delivery and load equipment, the disturbances resulting from the new electronic loads must be taken into consideration.

Harmonic currents caused by many types of customer load and utility equipment provide an example of this complexity. For many years, harmonic currents originated mainly from a few large-scale sources, such as arc furnaces and high-voltage dc transmission terminals. In these cases, they could be removed with relative ease by placing a large (and expensive) filter between the source and the main power line. Today, however, significant power line harmonics are being caused by many small, widely dispersed customer loads, such as rectifiers and solid-state controls for adjustable-speed motors. At the same time, an increasing number of other customers are using sensitive equipment, such as computers, the operation of which may be adversely affected by harmonics.

It would not be economically feasible to detect and filter each small source of harmonics or to isolate each sensitive load from all power line disturbances. A more practical approach is to control harmonics by agreement on limits for emission levels with filters installed on major offending loads, while defining an acceptable susceptibility level for equipment. Unusually sensitive electronic equipment may be supplied by special power conditioning interfaces, external to, or incorporated with, the equipment. Such an approach will require collaboration among utilities, equipment manufacturers, users, regulatory agencies, and standards-setting bodies.

3.1.3 Proliferation of microelectronic equipment

Increased use of microelectronics in equipment, controls, and processes has also increased the need to consider the quality of powering and grounding systems in the industrial sector. Many tools and equipment are electronic-processor based as factories become more automated and process intensive. Programmable logic systems control electronic adjustable-speed drives and servos based on inputs from electronic sensors and resolvers. Often the mechanical aspects of these processes, such as web tensioning, spindle acceleration, conveyor speed, extruder flow, or spray pressure, cannot tolerate variations caused by momentary power dips.

Copyright © 1999 IEEE. All rights reserved.

Copyright by the Institute Of Electrical & Electronics Engineers Inc
Fri Jul 20 10:33:34 2001

In the commercial sector PCs, fax machines, copiers, and printers that are now combining with electronic fluorescent lighting, adjustable-speed heat pumps, and various electronic communications, will likely lead to an all-electronic and paperless office. Even in the residential sector, we find electronics in every room from toys and tools to microwave ovens. Personal computers, VCRs, CD players, and digital clocks abound. In the near future we can expect electronically driven heat pumps, washing machines, and lighting—eventually we will see microwave clothes drying, electric vehicle battery charging, and the "all electronic kitchen."

Many of these electronic-based appliances are sensitive to voltage variations that were not noticed in the past. We now have more electronics in the power system than ever before and the forecast is for increasing levels. The bottom line is that our equipment has changed radically and a key question is, "Can the power supply as designed handle it?" Disturbance mitigation and power conditioning equipment, and associated costs, are well known but there is no clear assignment of financial responsibility.

3.1.4 The need for quality of power standards

Emerging concerns about electronic equipment upset and related issues have resulted in more attention to the quality of the power necessary for successful operation. Along with the need for quality power is the need for practical compatibility levels of end-user equipment, and for definition of economic responsibility in the producer-user partnership. The term *power quality* is now widely used, but objective criteria for measuring the quality of power—a prerequisite for quantifying this quality—need better definition. A high level of power quality is generally understood as a low level of power disturbances, however a high level of equipment tolerance may also be an effective solution. Agreement on acceptable levels of disturbances and of tolerance to these disturbances is needed.

Another difficulty in assessing the need for an interface between the utility power and sensitive loads is the subjective nature of estimating the cost of equipment misoperation attributable to power disturbances. This particular aspect is addressed from the technical point of view in this recommended practice, but the detailed economics are beyond its scope.

3.1.5 Conflicting design philosophies for performance and safety

The issue of power quality is made more difficult by conflicting philosophies advocated by people of different technical backgrounds and commercial interests. An example of this problem is found in the apparent conflicts resulting from interpretations of grounding requirements. The general requirement of a safe configuration and a safe operation for a power system is endorsed by all parties (utilities, users, regulatory bodies, voluntary standards organizations, etc.), but in some instances these requirements translate into wiring practices alleged to interfere with smooth operation of electronic systems.

Many anecdotal case histories have been encountered where system designers complain that the requirements of the National Electrical Code® (NEC®) (NFPA 70-1999)[1] prevent their

[1]Information on references can be found in 3.9.

Copyright © 1999 IEEE. All rights reserved.

Copyright by the Institute Of Electrical & Electronics Engineers Inc
Fri Jul 20 10:33:35 2001

system from performing in a satisfactory manner. This apparent conflict of philosophy can only be settled by giving safety the prevailing directive. That prevailing directive is precisely the purpose of the NEC, and correct application of the NEC articles does not prevent satisfactory operation of properly wired and grounded installations. If any adaptations have to be made for the system to operate satisfactorily, the equipment manufacturer must incorporate them in the equipment design, rather than ask for deviations from the NEC.

3.2 Power quality considerations

3.2.1 General discussion

Power systems operate with a constant line voltage, supplying power to a wide variety of load equipment. Power levels range from a few watts to megawatts, and the voltages at which the energy is generated, transported, and distributed range from hundreds of volts to hundreds of kilovolts. Transmission and primary distribution of this power are made at high voltages, tens to hundreds of kilovolts, in order to provide efficient and economic transportation of the energy over long distances. Final utilization is generally in the range of 120 V (typical residential) to less than one thousand (industrial), and a few thousands for larger loads.

At all these voltage and power levels, no matter how high, the equipment is dependent upon maintenance of a normal operating voltage range. At higher than normal levels there is limited capability for components voltage withstand. At lower than normal levels, the equipment performance is generally unsatisfactory, or there is a risk of equipment damage. These two disturbances, excessive voltage and insufficient voltage, are described with different names depending on their duration. There are also types of disturbances, as described in 3.2.2, that involve waveform distortion and other deviations from the expected sine wave.

3.2.2 Classification of disturbances

Four power system parameters—frequency, amplitude, waveform, and symmetry—can serve as frames of reference to classify the voltage and power disturbances according to their impact on the quality of the normal sinewave of system voltage. A brief discussion is given below of the need for evaluation of their impact on sensitive loads.

a) Frequency variations are rare on utility-connected systems, but engine-generator-based distribution systems can experience frequency variations due to load variations and equipment malfunctions.

b) Amplitude variations can occur in several forms; their description is inextricably associated with their duration. They range from extremely brief duration to steady-state conditions, making the description and definition difficult, even controversial at times. Their causes and effects need close examination to understand the mechanisms and to define an appropriate solution.

Copyright © 1999 IEEE. All rights reserved.

Copyright by the Institute Of Electrical & Electronics Engineers Inc
Fri Jul 20 10:33:36 2001

c) Waveform variations occur when nonlinear loads draw a current that is not sinusoidal. One could also describe an amplitude variation as momentary waveform variation, but the intended meaning of the term is a steady variation of the waveform, or lasting at least over several cycles. This type of disturbance may be described as harmonic distortion because it is easy to analyze as the superposition of harmonics to the nominal frequency of the power system.

d) Dissymmetry, also called unbalance, occurs when unequal single-phase loads are connected to a three-phase system and cause a loss of symmetry. This type of disturbance primarily concerns rotating machines and three-phase rectifiers and, as such, is not receiving broad attention. It is important, however, for machine designers and users. The percentage by which one-phase voltage differs from the average of all three is the usual description of this type of disturbance. A detailed definition of various measures of voltage and power quality by magnitude, duration, and spectral content is provided in IEEE Std 1159-1995.

3.2.3 Origin of disturbances

The term *origin of disturbances* can be understood in at least two different contexts or interpretations. According to one interpretation, the concern is for the source of the disturbance and whether it is external or internal to the particular power system. Typically, the boundary of a power system is defined as the watt-hour meter, and reference is made to the "utility side" of the meter (utility source side), or to the "user side" of the meter (user load side). According to another interpretation, the concern is for the nature of the disturbance source, and is then described in technical terms, such as lightning, load switching, power system fault, and nonlinear loads. Depending on local conditions, one can be more important than the others, but all need to be recognized. The mechanism involved in generating the disturbance also determines whether the occurrence will be random or permanent, and unpredictable or easy to define.

The first interpretation is motivated by the goal of assigning responsibility for the problem, and possibly liability for a remedy. The second interpretation is motivated by the goal of understanding the problem and developing a technically sound remedy. When discussing the problem among the parties involved, the different points of view must be recognized, lest misunderstandings occur. In the following paragraphs, the second interpretation leads to a description of mechanisms producing the disturbances.

The general tendency of users is to attribute most of their equipment upset problems to the utility source. Many other sources of disturbances, however, are located within the building and are attributable to operation of other equipment by the end user. Finally, there are sources of disturbances—or system errors—not associated with the power input of the equipment, such as electrostatic discharges to the equipment enclosure or cables, radiated electromagnetic interference (EMI), ground potential differences, and operator errors (see Figure 3-1).

Copyright © 1999 IEEE. All rights reserved.

Copyright by the Institute Of Electrical & Electronics Engineers Inc
Fri Jul 20 10:33:37 2001

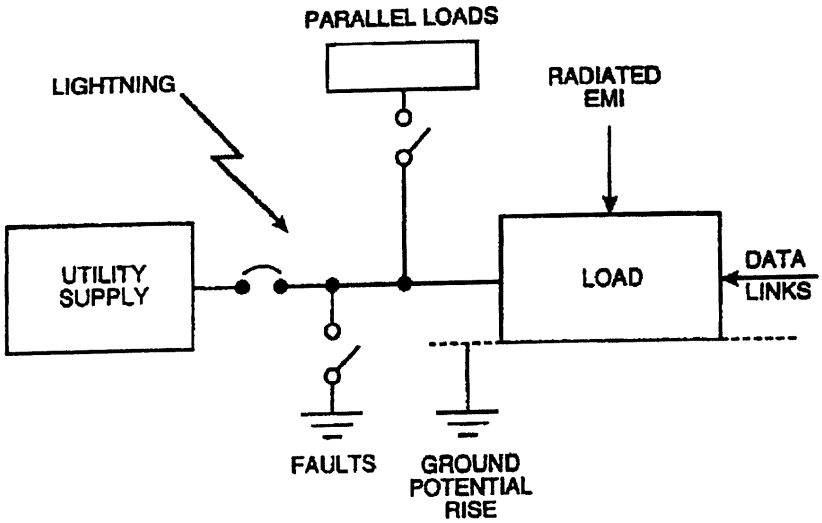

Figure 3-1—Sources of load disturbances (both internal and external)

3.2.4 Expectation of voltage sag disturbance

Power system faults occur on both sides of the meter, resulting from power system equipment failure or external causes (vehicle collisions, storms, human errors). These disturbances can range from a momentary voltage reduction to a complete loss of power lasting for minutes, hours, or days. Their accidental origin makes them unpredictable, although the configuration of a power system and its environment can make it more or less prone to this type of disturbance (see Key [B12]).[2] Figure 3-2 shows typical number of sag events per year by severity level, from a monitoring study conducted in the U.S.

3.2.5 Prediction of sag-related upset and damage

Low-voltage conditions are primarily upsetting to the equipment that cannot ride through periods of reduced available voltage. However some automated processes may be disturbed at a critical time where either the processing equipment or the end product may be damaged. For example, a data processing system or network communication loss can corrupt the information, while low-voltage trip of an automobile glass processing line may leave overheated windows sized to rollers or rough finished windows with blemishes or scars.

Typical low-voltage trip times based on lab testing for several different types of equipment are as follows:

a) Digital clocks: 1–10 seconds
b) Microprocessor-controlled equipment (PLC, PC, TV, VCR, etc.): 1–20 cycles
c) Induction motors: 10 cycle-seconds

[2]The numbers in brackets correspond to those of the bibliography in 3.10.

Copyright © 1999 IEEE. All rights reserved.

Copyright by the Institute Of Electrical & Electronics Engineers Inc
Fri Jul 20 10:33:38 2001

d) Motor starters and contactors: 1–2 cycles

e) Adjustable-speed drives: 1 cycle-second (control dependent)

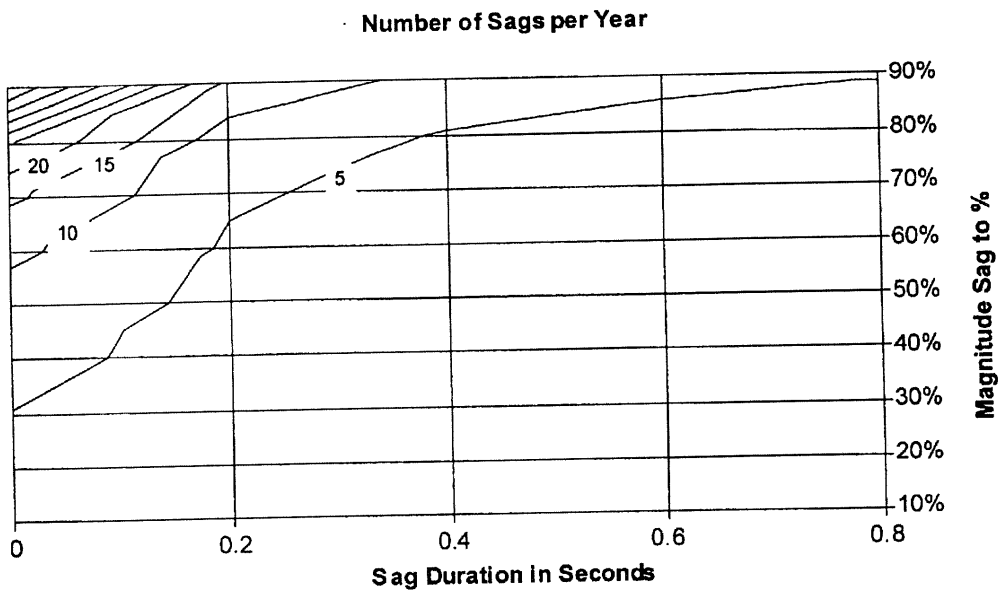

Example data: Not intended to represent typical performance.

Source: EPRI [B5].

Figure 3-2—Sags per year for 222 sites (from 6/1/93 to 6/1/95)

3.2.6 Expectation of surge disturbance

Some disturbances occur at random and are not repeatable or predictable for a given site although statistical information may be available on their occurrence (see IEEE Std C62.41-1991). Other disturbances, especially those associated with the operation of other equipment, can be predicted, are repeatable, and can be observed by performing the operating cycle of that equipment.

Lightning surges are the result of direct strikes to the power system conductors as well as the result of indirect effects. Direct strikes inject the total lightning current into the system. The current amplitudes range from a few thousand amperes to a few hundred thousand amperes. However, the rapid change of current through the impedance of the conductors produces a high voltage that causes secondary flashover to ground, diverting some current even in the absence of an intentional diverter. As a result, equipment connected at the end of overhead conductors are rarely exposed to the full lightning discharge current. Indirect effects include induction of overvoltages in loops formed by conductors and ground-potential rises resulting from lightning current in grounding grids or the earth.

Copyright © 1999 IEEE. All rights reserved.

Copyright by the Institute Of Electrical & Electronics Engineers Inc
Fri Jul 20 10:33:39 2001

A lightning strike to the power system can activate a surge arrester, producing a severe reduction or a complete loss of the power system voltage for one half-cycle. A flashover of line insulators can trip a breaker, with reclosing delayed by several cycles, causing a momentary power outage. Thus, lightning can be the obvious cause of overvoltages near its point of impact, but also a less obvious cause of voltage loss at a considerable distance from its point of impact. Clearly, the occurrence of this type of disturbance is unpredictable at the microscopic level (e.g., specific site). At the macroscopic level (e.g., general area), it is related to geography, seasons, and local system configuration.

Induction of surges by nearby lightning discharges is a less dramatic but more frequent event. The resulting surge characteristics are influenced not only by the driving force—the electromagnetic field—but also by the response of the power system—its natural oscillations. This dual origin makes a general description of the occurrence impractical, nevertheless a consensus exists on representative threats for various environments. Figure 3-3, the classic isokeraunic map of the U.S., shows the average number of days that thunder is heard.

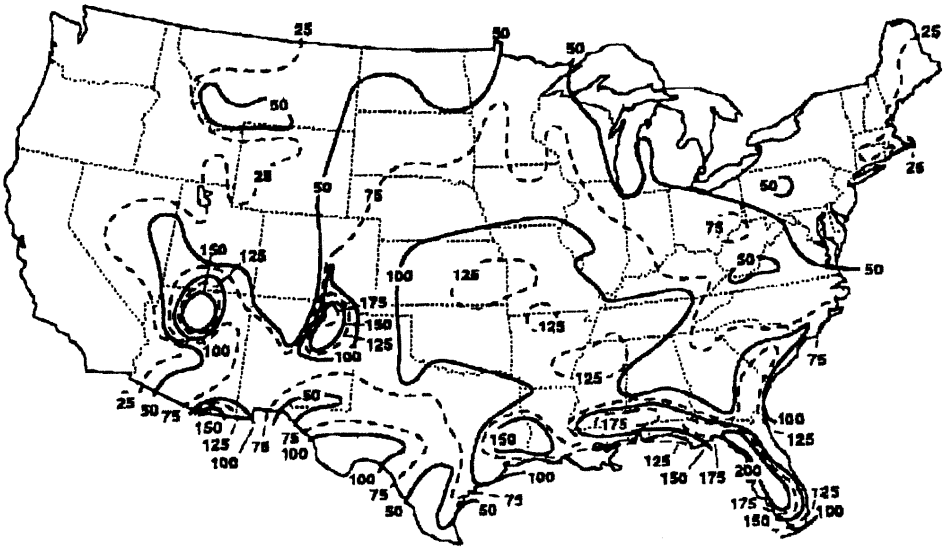

Source: Adapted from MacGorman et al. [B20].

Figure 3-3—Isokeraunic map showing number of thunderstorm days

Thunder heard indicates that a lightning discharge has occurred. It may be either from cloud to ground, or within a thundercloud. Most discharges occur within thunderclouds. Cloud-to-ground (CG) lightning occurs less frequently than lightning within clouds, but the CG is the primary hazard to people or objects on the ground. Figure 3-4 shows a map of the average annual ground flashes per square kilometer in the U.S. between 1989 and 1995.

Copyright © 1999 IEEE. All rights reserved.

Copyright by the Institute Of Electrical & Electronics Engineers Inc
Fri Jul 20 10:33:40 2001

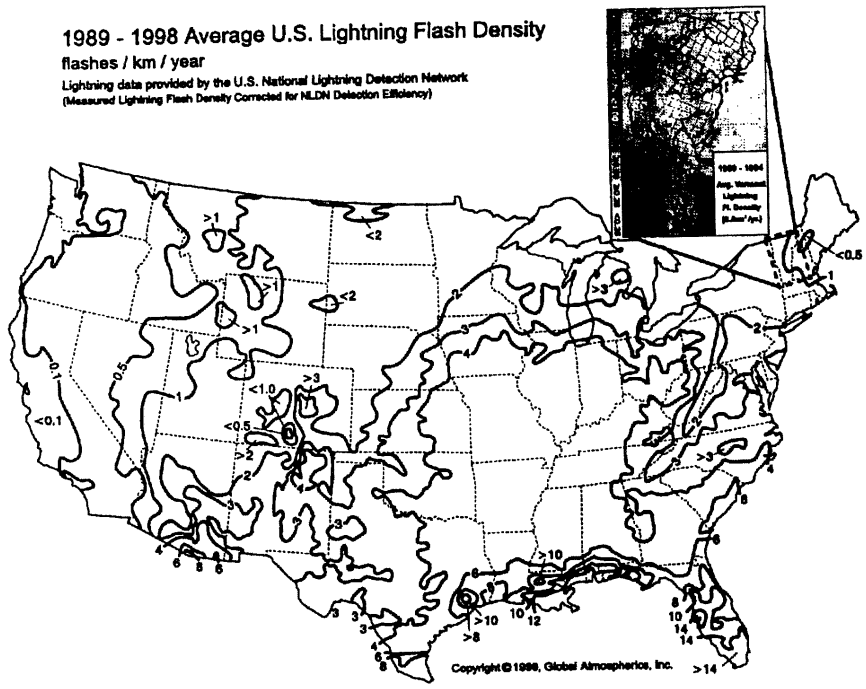

Source: Global Atmospherics, Inc.

Figure 3-4—Average annual cloud-to-ground flashes per km^2 per year in the continental U.S.

Note that most of the continental U.S. experiences at least 2 CG flashes/km^2/y. About one-half of the area will see 4 CG flashes/km^2/y, which is equivalent to about 10 discharges/mi^2/y. The maximum flash densities are found along the southeastern Gulf Coast and the Florida peninsula, where the values approach 20 CG flashes/km^2/y. Overall, about 20 million CG flashes strike the U.S. each year, and lightning is clearly among the nation's most severe weather hazards.

It is useful to estimate how often a normal-sized structure, such as a house, will be struck by lightning. For this, case data from the national lightning detection network are used to identify the typical number of CG flashes. We assume that the house is located in a geographic region that has an average of 4 CG flashes/km^2/y (see Figure 3-4). We also assume that the area of the house is about 10×20 m^2 and that there will be a direct strike any time a stepped leader comes within about 10 m of this area. In this case, the effective area of the house is about $30 \times 40 = 1200$ m^2, and the house is predicted to be struck, on average, $(1200 \times 4)/1\ 000\ 000 = 4.8 \times 10^{-3}$ times a year, or about once every 200 years. Another way to think of this hazard is that, in the 4 CG flashes/km^2 region, 1 of 200 houses is predicted to be struck each year, on average.

Copyright © 1999 IEEE. All rights reserved.

Copyright by the Institute Of Electrical & Electronics Engineers Inc
Fri Jul 20 10:33:41 2001

Load switching is a common cause of surges in power wiring. Whenever a circuit containing capacitance and inductance is being switched on or off, a transient disturbance occurs because the currents and voltages do not reach their final value instantaneously. This type of disturbance is inescapable and its severity depends on the relative power level of the load being switched and on the short-circuit current of the power system in which the switching takes place. Switching large loads on or off can produce long-duration voltage changes beyond the immediate transient response of the circuit. Whether the switching is done by the utility or by the user is immaterial from a technical point of view, although the responsibility may be the subject of a contractual dispute.

More complex circuit phenomena, such as current chopping, prestrikes, and restrikes, can produce surge voltages reaching ten times the normal circuit voltages, involving energy levels determined by the power rating of the elements being switched. These complex surges can have very destructive effects, even on rugged equipment, and must be controlled at the source as well as mitigated at the loads.

The occurrence of load switching disturbances is somewhat predictable, but not necessarily under controlled conditions. The introduction of power conversion equipment and voltage regulators that operate by switching on and off at high frequency has created a new type of load switching disturbance. These disturbances occur steadily, although their amplitude and harmonic content will vary for a given regulator as the load conditions vary.

Electrostatic discharge is a well-known phenomenon, responsible for interference and damage to electronic components and circuit boards when handled in a careless manner. However, from the point of view of a power system engineer, electrostatic discharges do not represent a significant threat because the high frequencies involved, just like in the case of the fast transient bursts, quickly attenuate the surge with distance. The discharge of electrostatic charges built upon the human body or objects, can also inject unwanted voltages or currents into the circuits. This phenomenon is associated with operator contact with the equipment (e.g., keyboards, panel switches, connectors) rather than with the quality of the incoming power. Thus, it is not included in the scope, but should of course not be ignored when troubleshooting equipment problems.

3.2.6.1 Nature of lightning strike damage

Most lightning strikes cause damage as a result of the large current that flows in the return stroke or the heat that is generated by this and the continuing current. If lightning strikes a person, for example, the current can damage the central nervous system, heart, lungs, and other vital organs. Also, many types of electronic circuits can be damaged or destroyed when exposed to an excess current or to an excess voltage produced by that current.

If lightning strikes on or near an overhead electric power or telephone line, a large current will be injected into or induced in the wires, and the current can do considerable damage both to the power and telecommunications equipment and to anything else that is connected to the system. If a lightning surge enters an unprotected residence by way of a power circuit, the voltages may be large enough to cause sparks in the house wiring or appliances. When such flashovers occur, they short-circuit the power system, and the resulting ac power arc can

Copyright © 1999 IEEE. All rights reserved.

Copyright by the Institute Of Electrical & Electronics Engineers Inc
Fri Jul 20 10:33:42 2001

sometimes start a fire. In these cases, the lightning does not start the fire directly but causes a power fault; the power system itself does the damage.

When a building or power line is struck by lightning, or is exposed to the intense electromagnetic fields of a nearby flash, the currents and voltages that appear on the structure are determined by the currents and fields in the discharge, and by the electrical response of the object that is struck. The grounding system of the structure is a critical part of the equation in determining what the response to the transient will be. For example, the voltages that appear on the electronics inside a grounded metal building are frequently produced by the fastest rising part of the return stroke current. This fast current excites resonant oscillations on the exterior of the building (like the resonance of a bell) that then couple into the structure via apertures in the metal, such as doors and windows.

The exact mechanisms by which lightning currents cause damage are still not completely understood. In the human body, the current heats tissue and causes a variety of electrochemical reactions. In the case of metals, large currents heat the surface of the conductor by interactions between the air arc and the surface, and the interior of the conductor by electron collisions with the metal lattice. If this heat is large enough, the metal melts or evaporates (see Figure 3-5).

Figure 3-5—Lightning damage to electronic circuits on a circuit board

3.2.6.2 Nature of surge effects in power and communication systems

Power line surges, whether caused by lightning, circuit switching, or other events, typically represent the biggest threat because of larger exposure areas than, for example, a lightning strike. Although damage in the electrical wiring may occur, interactions between power line surges and victim equipment is the main concern. Consider the devices and equipment that may become the victims of a surge, and their failure mechanisms. After-the-fact investigations

Copyright © 1999 IEEE. All rights reserved.

Copyright by the Institute Of Electrical & Electronics Engineers Inc
Fri Jul 20 10:33:42 2001

and experimental data show a wide range of surge-related upset and failure mechanisms. These include insulation breakdown, flashover, fracture, thermal and instantaneous peak power overloads, and *dV/dt* and *dI/dt* limits being exceeded. The following list gives some generic types of surge victims and the typical failure or upset mechanisms:

a) Electrical insulation breakdown or sparkover

The failure mechanism (breakdown or sparkover) is principally a function of the surge voltage, and rise time of the leading edge. Failure rate increases as surge magnitude and/or rise time increases. *Insulation* is to be taken in the broadest sense of solid or liquid material separating energized conductors in equipment, clearances on a printed circuit board, edges of semiconductor layers, etc. A distinction must be made between the initial breakdown of insulation, related to voltage only, and the final appearance of the damaged insulation, related to the total energy dissipated in the breakdown path. In another situation, the insulation of the first turns of a winding may be subjected to higher stress than the others as the result of the uneven voltage distribution resulting from a steep front rather than only the peak value of the surge.

b) Surge protective device failure

Normally the voltage across the device is essentially constant, and the energy is a function of the surge current level and duration. One failure mode of such a device will occur when the energy dissipated in the bulk material raises the temperature above some critical level. Failure modes associated with the current level, such as flashover on the sides of a varistor disc, failure at the boundary layers of the varistor grains, or fracture of large discs, have also been identified and may not be related to energy.

c) Semiconductor device damage

Inadvertently, devices such as thyristors responding to the rate of voltage change can be turned on by a surge, resulting in failure of the device or hazardous energizing of the load they control. In a similar way, a triac may be turned on by a voltage surge without damage, but still fail by exceeding the peak power limit during a surge-induced turn-on with slow transition time.

d) Power conversion equipment nuisance trip

An example of this is a front-end dc link where the filter-capacitor voltage can be boosted by a surge, resulting in premature or unnecessary tripping of the downstream inverter by on-board overvoltage or overcurrent protection schemes.

Copyright © 1999 IEEE. All rights reserved.

Copyright by the Institute Of Electrical & Electronics Engineers Inc
Fri Jul 20 10:33:44 2001

e) Data-processing equipment malfunction

In this case the malfunction (data errors), not damage, may be caused by fast rate of voltage changes (capacitive coupling) or fast rate of current changes (inductive coupling) that reflect the initial characteristic of the surge event. This response is insensitive to the "tail" of the surge, where all the "energy" would be contained according to the misleading energy-related concept.

f) Light bulbs fail prematurely

Lamps may withstand the short burst of additional heating caused by a few microseconds of surge-caused overcurrent. However, they also fail under surge conditions when a flashover occurs within the bulb, triggering a power frequency arc that melts the filament at its point of attachment. This is another failure mechanism originating with insulation breakdown.

Table 3-1 presents a matrix of surge parameters and types of equipment, showing for each type of victim which surge parameter is significant or insignificant. The authors have sought to identify all types of potential victims (and invite additions to this list).

Table 3-1—Surge parameters affecting equipment failure modes

Type of equipment	Surge parameters					
	Source impedance	Peak amplitude	Maximum rate of rise	Tail duration	Repetition rate	I^2t in device[a]
Insulation						
- Bulk		X		X		
- Windings		X	X			
- Edges		X	X			
Clamping SPDs						
- Bulk	X	X			X	X
- Boundary layer		X				
Crowbar SPDs	X			X	X	X
Semiconductors						
- Thyristors		X	X			X
- Triacs	X	X	X			X
- IGBTs		X	X			X
Power conversion						
- DC level	X	X		X	X	
- Other			X	X		
Data processing malfunction		X	X		X	

[a]The I^2t in the device is actually the result of the combination of surge parameters and device response to the surge. Like other power- and energy-related equipment stress, I^2t is not an independent parameter of the surge.

Copyright © 1999 IEEE. All rights reserved.

Copyright by the Institute Of Electrical & Electronics Engineers Inc
Fri Jul 20 10:33:45 2001

3.2.7 Measurement of power quality

There has been a tendency to attribute disturbances and failures to *power surges*, a term often used by the media but rather ill-defined. The ambiguity results in part from an unfortunate dual definition of the word *surge*.

a) To some people, a surge is indeed the phenomenon being discussed here, that is, a transient voltage or current lasting from microseconds to at most a few milliseconds, involving voltages much higher than the normal (two to ten times).

b) To other people, a surge is a momentary overvoltage, at the frequency of the power system, and lasting for a few cycles, with voltage levels slightly exceeding the five to ten percent excursions that are considered normal occurrences.

The term *swell* has been adopted by this recommended practice to describe this second type of overvoltage; perhaps one day it will supplant the usage of surge for that meaning. It would be a mistake to attempt protection against these long-duration power frequency swells with a surge protective device that is designed to absorb large but short impulses of energy. There is a growing recognition that the horror tales of surge protective device failures are more likely to be caused by swells rather than by large surges.

Nonlinear loads draw nonsinusoidal currents from the power system, even if the power system voltage is a perfect sine wave. These currents produce nonsinusoidal voltage drops through the system source impedance, which distort the sine wave produced by the power plant generator. A typical nonlinear load is a dc power supply consisting of rectifiers and a capacitor-input filter, such as used in most computers, drawing current only at the peaks of the voltage sine wave. This current has a high third harmonic content that has also created a new concern, that of insufficient ampacity of the neutral conductor in a three-phase system feeding power supplies (see Chapter 4 for a discussion of this problem).

3.2.8 Power quality survey data

Power quality site surveys have been performed and reported by a number of investigators. However, the reports are difficult to compare because the names of the disturbances and their thresholds vary among the reports. Manufacturers of disturbance recorders have defined the events reported by their instruments at some variance with other sources of definitions. To help resolve the confusion, IEEE Std 1159-1995 provides unique definitions for each type of disturbance. The results of this effort, however, will take some time to be generally recognized and accepted. In the meantime, terms used by different authors might have different meanings, leaving on authors the burden of defining their terms and leaving for readers the burden of being alert for possible ambiguities.

One example of such ambiguities occurs when attempting to summarize data from different surveys. For instance, two surveys have been widely cited (Allen and Segall [B1] and Goldstein and Speranza [B7]); each was aimed at defining the quality of power available for the equipment of concern to the authors. As a result, each author categorized the disturbances according to the criteria significant to that equipment, including the threshold below which disturbances are not recorded by the instrument. With hindsight, it is not surprising that the

Copyright © 1999 IEEE. All rights reserved.

Copyright by the Institute Of Electrical & Electronics Engineers Inc
Fri Jul 20 10:33:45 2001

criteria were different; when comparing the data from the two surveys expressed in percentages (leading to pie chart representations by some authors of application papers), a puzzling difference was found. By analyzing the detail of the survey premises and definitions, the differences can be reconciled to some extent (see Martzloff and Gruzs [B14]).

Advancements in power line monitoring technologies enable sophisticated analyses of the electrical environment. Among the developments that cleared the way for comprehensive, geographically dispersed power line surveys are automated data-acquisition software and remote programming capability of multiple monitoring units. Three of the most recent comprehensive power quality surveys include those conducted by the Canadian Electrical Association (CEA) (see Hughes et al. [B9]), the National Power Laboratory (NPL) (see Dorr [B3]), and the Electric Power Research Institute (EPRI) (see Sabin et al. [B19]), all conducted in North America. The information collected during these three surveys provides a detailed picture of the expected electrical environment in which end-use appliances are intended to be used. The scope of each survey is described in the following paragraphs. (For a detailed description of how the results of these surveys are being presented, see Dorr et al. [B4].)

a) CEA Survey

In 1991, the CEA began a three-year survey of power quality. The objective of the survey was to determine the general levels of power quality in Canada. The results would serve as a baseline against which future surveys could be compared to determine trends. The results would also familiarize utilities with making power quality measurements and interpreting the data gathered. Twenty-two utilities throughout Canada participated in the survey, with a total of 550 sites monitored for 25 days each.

Residential, commercial, and industrial customer sites were monitored at their 120 V or 347 V service-entrance panels. Monitoring was done at the service-entrance panel because it was considered to offer a blended average of the power quality throughout the customer's premises. CEA decided that monitoring further into the premises could have made the results unduly influenced by electrical loads on an individual branch circuit. Monitoring at the distribution feeder would not have shown disturbances originating within the customer's own premises. Only line-to-neutral voltages were monitored. Neutral-to-ground voltages were not monitored because neutral is bonded to ground at the service-entrance panel.

b) NPL Survey

In 1990, NPL initiated a five-year survey of single-phase, normal-mode electrical disturbances. The objective of the survey was to provide a large, well-defined database of recorded disturbances that profiles power quality at typical points of power usage. Single-phase, line-to-neutral data was collected at the standard wall receptacle. The disturbances found at this point of utilization are often coupled into computers and other electronic appliances. Data was collected from 130 sites within the continental U.S. and Canada.

Copyright © 1999 IEEE. All rights reserved.

Copyright by the Institute Of Electrical & Electronics Engineers Inc
Fri Jul 20 10:33:46 2001

The sites included a broad range of building locations, building types, building ages, and population areas. Included were locations where participants felt they had power quality problems and also those where no problems were perceived. The diversity of locations yielded a representative climatic and geographic cross section of the U.S. and Canada as well as a representative cross section of the major types of utility loads (heavy industry, light industry, office and retail stores, residential, and mixed).

c) EPRI Survey

In 1992, EPRI conducted a survey to determine the quality of power on ac distribution feeders in the U.S. This project was intended to monitor and then to simulate the electrical disturbances recorded at the selected feeders. Twenty-four geographically dispersed U.S. utilities participated in the survey. The objective of the monitoring portion of the survey was intended to provide a statistically valid set of data reflecting the number and types of electrical disturbances typically found at ac distribution feeders. The survey includes monitoring at 300 locations. Table 3-2 summarizes the parameters of the three surveys.

Table 3-2—Summary overview of the CEA, NPL, and EPRI power quality surveys

Survey	Monitor period	Quantity of data (monitor months)[a]	Number of sites	Measured parameters
CEA	1991 to 1994	530	550	Voltage
NPL	1990 to 1995	1200	130	Voltage
EPRI	1992 to 1995	5400	300	Voltage and current

[a]One monitor month is 30.4 days of data from one monitor.

3.3 Grounding considerations

3.3.1 Grounding for safety

A lot has been written on grounding for industrial and commercial power systems. Proper grounding is essential to safe and satisfactory performance of a power system. There are generally three requirements for such grounding:

a) Providing a low-impedance path for the return of fault currents, so that an overcurrent protection device can act quickly to clear the circuit;

b) Maintaining a low potential difference between exposed metal parts to avoid personnel hazards;

c) Overvoltage control.

Copyright © 1999 IEEE. All rights reserved.

Copyright by the Institute Of Electrical & Electronics Engineers Inc
Fri Jul 20 10:33:47 2001

A very comprehensive discussion of these considerations, applicable to any installation, can be found in other books in the *IEEE Color Book Series:* IEEE Std 141-1993, IEEE Std 142-1991, and IEEE Std 446-1995.

3.3.2 Referencing for performance

This aspect of grounding is much less well defined than the safety grounding practice. Electronic equipment and systems vary greatly with respect to noise and transient immunity. Some electronic processing system configurations are very difficult to adequately ground in a typical factory or office building installation.

Three particular system installation scenarios tend to experience more grounding- or referencing-related upsets, surge damage, and undesired processing performance than others. When these difficult installation scenarios are encountered then special attention to grounding details is likely to be required. A summary of what to look for is given in Table 3-3.

Table 3-3—Electrical measures and equipment symptoms of difficult installation scenarios

Difficult installation scenarios	Troublesome electrical condition	Typical electronic equipment symptoms	What and where to measure
1. Separately located and powered components of the same system	*Different signal reference levels* or induced currents on data cables	Temporary or chronic data errors, hangs or lockups, slow transfers, more retries, or I/O damage	Measure for 60 Hz voltage level between equipment chassis
2. Multiple external connections to ports of a single appliance or system	*Transient voltages and currents* at data and signal port connections	Intermittent lock ups, corrupted signals, or damage of exposed I/O circuits and communication ports	Monitor for transient voltages at equipment terminals
3. A single appliance or system sharing a grounding path with other equipment	*Stray currents and common-mode noise* in equipment grounding conductor and on data cables	Random data errors or slow transfer, particularly in analog- rather than digital-based systems	Check for stray currents above 1–2 A in green-wire ground

3.3.3 Difficult installation scenario 1—An electronic processing system with separately located and powered components interconnected by data or control cables

Here the trouble is different system components (e.g., a computer, a printer, a data network, an industrial process control, or a PC-connected security system) interconnected by data cables and powered from different circuits in the building electric system. This arrangement

Copyright © 1999 IEEE. All rights reserved.

Copyright by the Institute Of Electrical & Electronics Engineers Inc
Fri Jul 20 10:33:48 2001

is often vulnerable to differences in ground reference voltage levels between components or induced currents in data lines, which occur by connection of data cable grounds. For example, a long printer cable RS-232 interface, or a network coax cable shield connected between different processing system components experience differences in ground reference voltages.

The ground referencing problem scenario has two critical factors to look for. First, it occurs where one component, such as the printer, is ground referenced to another system component, such as the PC, via data line. Second, the electronic components in this scenario are fed by different branch circuits or from different points in the power system, as shown in Figure 3-6. The data cable link may have either one or both ends of the cables grounded to the equipment chassis. With both ends grounded, transient or steady currents will flow on the link. With only one end connected, transient or steady voltages appear at the open terminal.

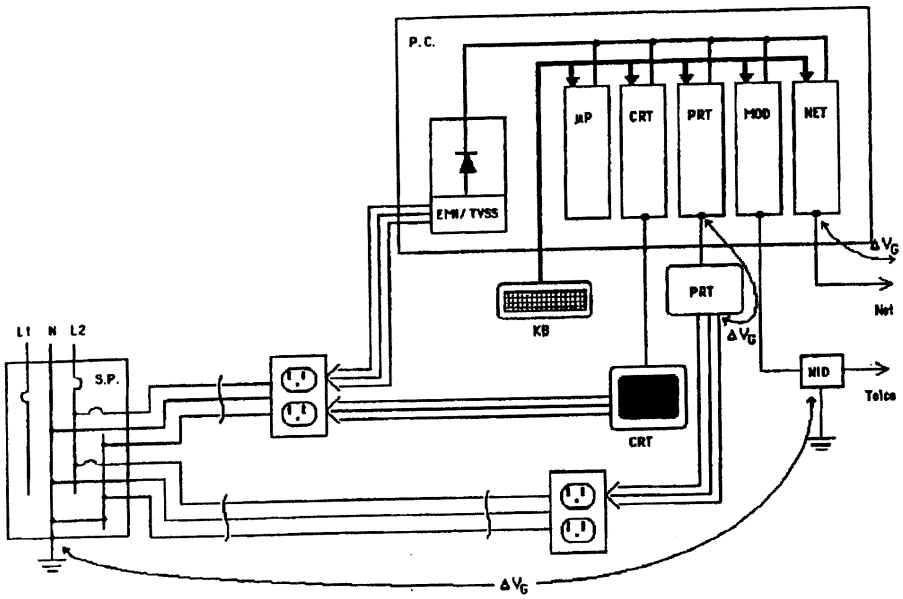

Figure 3-6—CPU and peripheral interfaces with various wiring and circuit reference grounding paths

These conditions sometimes cause data-transfer problems during transient events such as surge currents or voltages in ground conductors. Typical equipment symptoms of a referencing problem are temporary data hangs, slowdown of data transfer, multiple retries and permanent lock ups, or in the worst case, I/O damage. However, sensitivity varies between electronic equipment models and designs because of differences in upset thresholds, dependence on stable ground reference, and degrees of data line isolation.

Site conditions that may lead to ground referencing problems in an electronic processing system are

Copyright © 1999 IEEE. All rights reserved.

Copyright by the Institute Of Electrical & Electronics Engineers Inc
Fri Jul 20 10:33:49 2001

a) Long data cables, e.g. RS-232 longer than 8 m (25 ft), and coax and twisted pair longer than 30 m (100 ft).

b) Long distances from a common power reference, e.g., when any of the components (servers, printers, or PCs) are on a different branch circuit, different power panel, or in the worst case, a different power service entrance.

c) Exposure to transient currents in nearby conductors (which induce current transients when the cable shield is connected at both ends and voltage transients when the cable shield is connected at only one end).

3.3.4 Difficult installation scenario 2—A single electronic component has connections to more than one external utility system

In this arrangement the trouble is that one electronic component (such as a modem or PC) is referenced to more than one external system, and may experience transient voltages and currents between these systems. Typical external system connections include electric power, telephone, cable TV, and local area networks. These separate utility systems are difficult to maintain at the same voltage level, especially if they are grounded at different locations and enter the building or equipment area from different sides. This condition invites exposure to upsetting or damaging transient voltage problems.

The typical symptoms are slowdown of data transfer, retry, lockup and even damage of exposed I/O components. Key variables that will determine the likelihood of transient overvoltage problems are

a) How far apart the different systems enter the building or area in the building where the processing system is located; and

b) How effectively the different systems' ground references are bonded together.

Figure 3-7 shows the typical example of exposure to transient voltages for a fax machine connected to the telephone system.

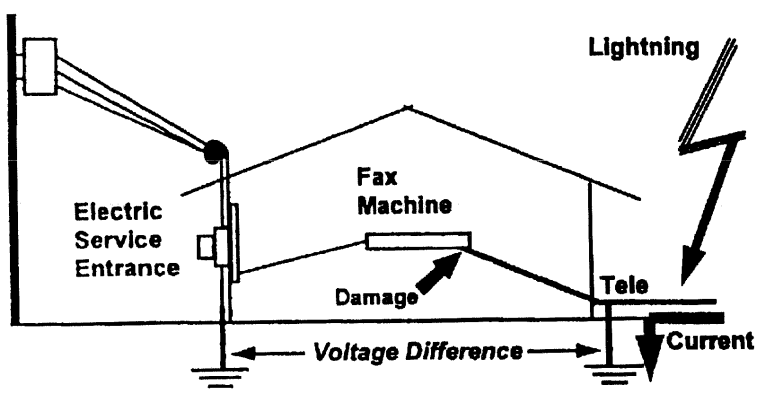

Figure 3-7—Impact of transient voltage surge in the telephone system on a fax machine

Copyright © 1999 IEEE. All rights reserved.

Copyright by the Institute Of Electrical & Electronics Engineers Inc
Fri Jul 20 10:33:50 2001

If the power line surge momentarily raises the fax machine tip or ring reference level, then the entire surge voltage may appear between the telephone line interface and the power cord of the fax. Signal interference or tuner damage may be expected. An isolated/insulated grounding (IG) circuit is not going to help in this scenario because it does nothing to equalize voltages between different system interfaces with equipment. In fact an IG is likely to exaggerate this problem by eliminating local ground bonds.

Transient upset or damage problems also can occur when a data modem is connected to the local telephone and power systems. The telephone jack input to the modem becomes the point where the two utility systems come together. This interface may experience a large voltage difference between the two utility systems when a surge current is induced in one of the utility systems and not in the other. Such transient potential differences can be equalized by referencing all external conductors to the same ground window.

3.3.5 Difficult installation scenario 3—An electronic processing system with power, data, or control cables exposed to stray currents

In this scenario the trouble occurs when several different processing system components (i.e., a computer, a printer, a data network, a server, etc.) are physically separated, but interconnected by various data cables, and may be fed by different branch circuits of the same electric power system. This arrangement may be vulnerable to stray currents in power or data lines, which enter via bonding of power grounds or the connection of data cable grounds and cable shields. For example, an RS-232 printer interface cable or the shields of network coax cables are grounded at both ends. Also the grounding conductors of power circuits are bonded to metal enclosures and the building grounding electrode system. Here bonding may promote a stray current problem.

Stray ground currents and common-mode electrical noise between components of the system cause either voltage differences or EMI of data communications. Stray currents are more likely to occur when branch circuits feed a variety of electronic and other equipment, and there is little or no control over the type and condition of the other equipment sharing the circuits. Symptoms that may be observed when these conditions exist are seemingly random electronic process or data transfer upsets, particularly in digital- rather than analog-based systems.

3.3.5.1 Stray currents and voltages related to isolated grounding techniques

To recognize the presence of stray ground currents and related voltages, look for symptoms. Stray ground currents usually exceed the normal mA-level leakage on the ground conductor expected from various connected load equipment. When these currents flow, the normal wiring impedance leads to stray voltages. Conditions that cause stray currents are sometimes transient (as opposed to continuous). For example, stray ground currents come from an electrostatic discharge to a metal enclosure, faults in wiring or equipment, and capacitive-coupling from nearby circuits when equipment is energized or a surge current is in the area. However, miswiring in building electrical circuits or inside connected equipment is probably the most common cause of stray ground currents.

Copyright © 1999 IEEE. All rights reserved.

Copyright by the Institute Of Electrical & Electronics Engineers Inc
Fri Jul 20 10:33:51 2001

Typical wiring errors that allow stray ground currents. Wiring errors such as neutral-to-ground bonds in subpanels, neutral-ground reversals in receptacles, or miswiring in equipment are a common cause of stray currents. A neutral conductor that is inadvertently grounded downstream of the main disconnect will allow normal currents to stray into the ground system as shown in Error 1 of Figure 3-8. Error 2 describes another source of stray current from a neutral-to-ground reversal wiring error in an electric outlet. Sometimes wiring errors or component breakdown occurs inside individual load equipment, such as an inadvertent neutral-ground connection. This connection, which can cause stray ground currents, is pointed out in Figure 3-8.

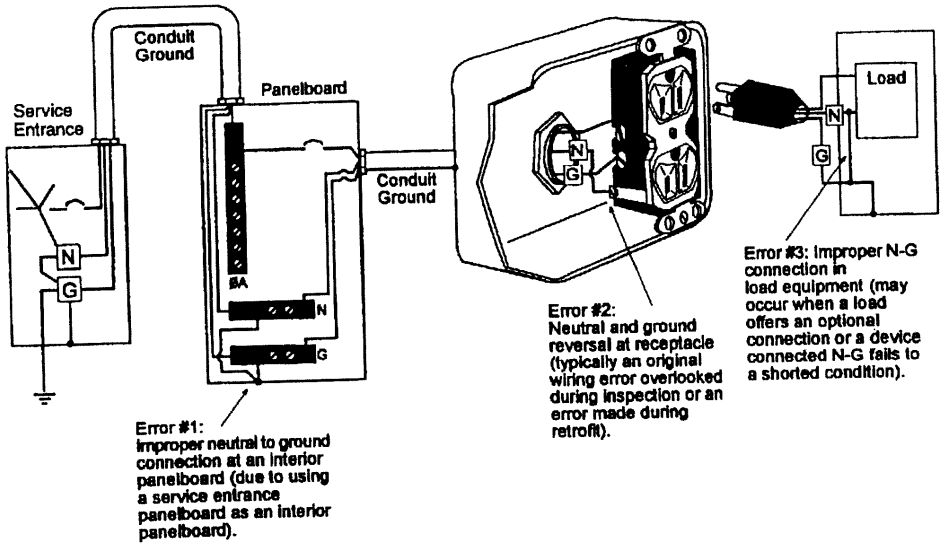

Figure 3-8—Typical wiring errors on a branch circuit

Stray ground currents are intermittent currents in the green wire that exceed the normal mA leakage current expected from various connected load equipment. These currents are common in virtually every power system and can occur under a variety of conditions, many of which are transient (as opposed to continuous). For example, stray ground currents may come from an electrostatic discharge to enclosures, short circuits in wiring or equipment, and capacitive coupling from nearby circuits when equipment is energized or a surge is produced. However, miswiring in building circuits or in connected equipment is probably the most common cause. A neutral conductor that is inadvertently grounded downstream of the main disconnect will allow normal currents to stray.

These stray currents in the equipment grounding conductor or ground reference path can cause variations in the ground potential levels throughout the equipment grounding system. Inadvertent neutral-to-ground bonds or neutral-ground reversal wiring errors are probably the most common cause of stray currents. Suspect stray ground currents or EMI when you have these wiring conditions exist and symptoms of electronic processing upsets are observed, particularly in digital- rather than analog-based data systems. For example, when random upsets in existing electronic processing systems are occurring, branch circuits feed a variety of

Copyright © 1999 IEEE. All rights reserved.

Copyright by the Institute Of Electrical & Electronics Engineers Inc
Fri Jul 20 10:33:52 2001

electronic and other equipment loads, and there is little or no control over the type and condition of the other loads sharing the circuit.

3.4 Protection of susceptible equipment

3.4.1 General information

The concept of protection implies preventing a hostile environment from affecting susceptible equipment. Protection of the equipment against the hostile environment is the goal of the technology of electromagnetic compatibility (EMC). Discussing the need for protection, therefore, takes on two aspects: characterizing the environment and characterizing the susceptibility of the equipment. Disturbances to the environment have been briefly discussed in the preceding paragraphs. More complete descriptions can be found in other IEEE standards, such as IEEE Std 519-1992 and IEEE Std C62.41-1991.

One aspect that many protection strategies do not address is the significance of the rate of change in voltage disturbances. This rate of change is important in two aspects:

a) A fast rate of change has greater capability of producing a disturbance in adjacent circuits by capacitive and inductive coupling; and

b) A slow rate of change can make ineffective a protective device based on inserting a series inductance in the power line.

Detailed analysis of the rate-of-change issue is beyond the scope of this chapter, but Figure 3-9 takes the concept one step further in identifying the issues.

3.4.2 Noise protection

Noise on the power line is generally understood as a disturbance of low amplitude, a small fraction of the system voltage (and high frequency relative to the power system), while a surge on the power line is generally understood as a disturbance of larger fraction, or a multiple of the system voltage. The boundary between the two phenomena is not clear, and documents prepared by groups of different backgrounds and interest can vary on the definition of this boundary. Noise effects are often lumped under the label of EMI and addressed by frequency-domain-oriented specialists. Surge effects are generally addressed by time-domain-oriented specialists more concerned with damaging effects than upset effects. These different points of view are also reflected in Figure 3-3. IEEE Std 518-1982, Morrison [B17], and Ott [B18] provide comprehensive discussions of noise-reduction practices.

Copyright © 1999 IEEE. All rights reserved.

Copyright by the Institute Of Electrical & Electronics Engineers Inc
Fri Jul 20 10:33:53 2001

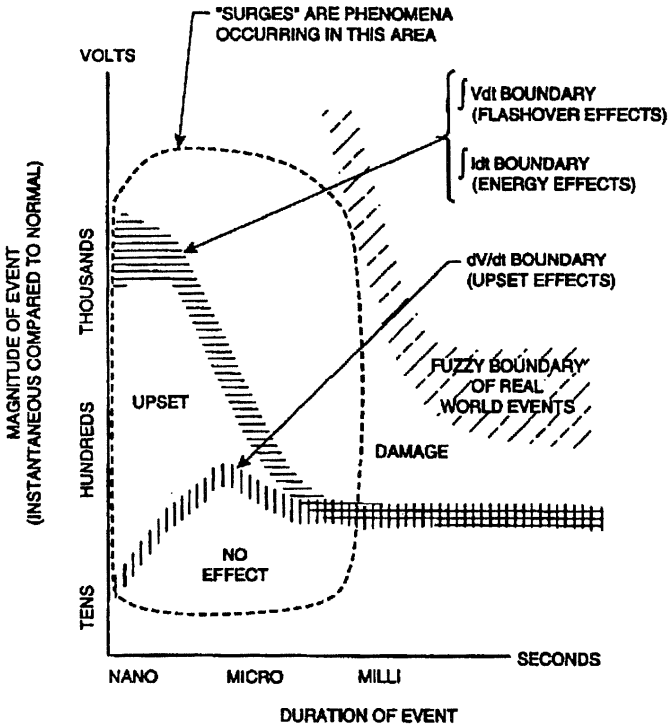

Figure 3-9—Relationship between disturbance characteristics and their effects on equipment

3.4.3 Surge protection

Surges can have many effects on equipment, ranging from no detectable effect to complete destruction. In general, electromechanical devices withstand voltage surges until a dielectric breakdown occurs, while electronic devices can have their operation upset before hard failure occurs. At intermediate levels, progressively more intense upset occurs until breakdown takes place. The semiconductor junctions of electronic devices are particularly susceptible to progressive deterioration. Definitions of the level beyond which a transient overvoltage becomes a threat depend on the type of victim equipment. While electromechanical devices can generally tolerate voltages of several times their rating for short durations, few solid-state devices can tolerate much more than twice their normal rating. Furthermore, data processing equipment can be affected by fast changes in voltage with relatively small amplitude compared to the hardware-damaging overvoltages.

The issue of survival or undisturbed operation of the equipment can be attacked in three ways: eradication of the cause of surges (e.g., the elimination of lightning); building equipment immune to any level of surges, no matter how high; or the obvious choice, finding the best economic tradeoff. Moderate surge-withstand capability is built into equipment, and the worst surges occurring in the environment are reduced, by application of suitable protective devices, to a level that the equipment can tolerate (see IEEE Surge Protection Standards Collection [B10]).

Copyright © 1999 IEEE. All rights reserved.

Copyright by the Institute Of Electrical & Electronics Engineers Inc
Fri Jul 20 10:33:54 2001

Low-voltage, end-user-type surge protective devices are often described as "transient suppressors," but their operation is really a diversion of the surge current through a low-impedance path preventing the rise of high voltages across the load terminals. For large surge currents, this diversion is best accomplished in several stages. The first diversion should be performed at the entrance to the building, typically by conventional surge arresters rated for this duty. Then, any residual voltage resulting from the action of the arrester can be dealt with by a second protective device at the power panel of the computer room, or at the terminals of a connected load, or both. In this manner, the wiring inside the building is not required to carry the large surge current to and from the diverter at the end of a branch circuit. Such a long path for the current would produce inductive voltage drops in the branch circuit wires, resulting in a rise of the neutral or grounding conductor terminals with respect to local grounds. A potential problem, however, is associated with the multistage protection scheme; if not properly coordinated, a downstream protective device may attempt to divert all of the impinging surge and fail in the process. Thus, proper attention must be given to coordination of cascaded surge protective devices (see Martzloff [B13]). Additionally, proper attention must be given to insuring that surge protection on the power port is coordinated with the surge protection devices on all other ports of entry to the equipment, such as modems, network cables, and printer cables.

3.4.4 Sag protection

Sag protection consists of providing some source of energy to make up for the momentary loss of input power. Sag protection can vary from short ride-through provided by added capacitance to a full UPS system (see 7.2.8, 7.2.9, IEEE Std 446-1995, and IEEE Std 1346-1998 for more information). A more detailed discussion of sag immunity testing is given in 3.5.1.2.

3.5 Information technology equipment (ITE)

3.5.1 Powering ITE

The powering requirements for common office equipment such as personal computers, fax machines, copiers, alarm systems, as well as a wide assortment of consumer electronics products fall into a range such as ±10%. All of these devices typically have some level of built-in immunity to voltage variations, which can be defined by power quality performance testing to define what is commonly referred to as the CBEMA-type curve or profile for the device under test. A CBEMA curve approach is simply the application of a two-dimensional grid to plot the input voltage vs. time duration performance of any electronic appliance. These plots are a useful way to compare the power quality performance of different electronic products. In effect, this is the input vs. output energy performance for that product (or power supply) because we are comparing the amount of input energy (either high, low, or nominal) to the ability of the power supply to support its output load without interference or upset.

The classic example of this approach is the switch-mode power supply that is found in modern single-phase electronic products. The front end of the power supply is a bridge rectifier with a bulk capacitor for energy storage. The input ac is converted to a dc voltage that is in turn stepped down or converted to the appropriate dc voltages required by the output loads. Monitoring this output load voltage for "out of limits" deviations, while injecting sags, swells, transients, interruptions, and steady-state voltage variations at the input terminals to

 Copyright © 1999 IEEE. All rights reserved.

Copyright by the Institute Of Electrical & Electronics Engineers Inc
Fri Jul 20 10:33:55 2001

the power supply yields the input voltage vs. duration performance plot referred to as that product's "CBEMA-type curve."

The susceptibility level of the equipment, however, is a subject that is more difficult to quantify because it requires the disclosure by manufacturers of information that some are reluctant to provide, lest it be misunderstood or misused. Nevertheless, the consensus process has produced a useful graph of typical susceptibility levels—or the converse, tolerance levels for single phase equipment such as personal computers, copiers, fax machines, and other ITE devices. This graph has been widely published, but has been recently revised to more accurately reflect the tolerance capabilities of the aforementioned equipment, and is reproduced here as Figure 3-10. Note that the graph only addresses the magnitude of the voltage, with a corresponding duration.

Part (a) of Figure 3-11 shows an example of power supply ride through a voltage sag, and part (b) of Figure 3-11 shows an example of power supply ride through a voltage interruption. The input voltage drops to zero and several cycles later, the output dc bus begins to drop. For this case, one data point would be plotted at 0 V and 5 cycles, which is the point where the dc bus dropped from 5 to 4.75 V. The arbitrary pass/fail criteria selected here is –5% of nominal or 4.75 V dc for the 5 V dc bus, which is a level specified in many digital logic data books as the lower limit for guaranteed performance of a given logic chip. Similarly, by injecting other high- and low-voltage events at the power supply input terminal, and monitoring a low- or high-output threshold, enough data points may be gathered to fill in or plot the CBEMA-type curve for the example switch-mode power supply.

If the product being tested were an adjustable speed drive (ASD) instead of a PC power supply, some other arbitrary pass/fail criteria would have to be selected. In the ASD case, this could possibly be the speed in RPM of the output motor. Because there is such a wide diversity in pass/fail performance criteria that may be selected for a given product or a given process, it is important to emphasize that the new CBEMA curve shown in Figure 3-10 is intended for single-phase ITE and is not intended to reflect the performance of all electronic-based equipment. There are simply too many variables, such as power supply loading, nominal operating voltage level, and process complexity, to try to apply a "one size fits all" CBEMA curve.

3.5.1.1 History of the CBEMA curve

The origination of the CBEMA curve goes back to 1977 when the Computer and Business Equipment Manufacturers Association's (CBEMA) ESC-3 Working Group was asked to provide their input into an energy performance profile for computer equipment that was proposed for publication in IEEE Std 446-1995 (*IEEE Orange Book*). After some minor modifications to the proposal, the ESC-3 Working Group approved this initial version of the curve, which remained unchanged until early in 1996. Throughout the nearly twenty years that the original version was published, it grew in stature from a simple curve describing the performance of mainframe computer equipment (PCs were not available), to a curve that was used to attempt to define everything from specification criteria for electronic equipment to the basis of power quality performance contracts between electric utilities and large industrial customers. Obviously this is quite an extension from the initial intent of describing the power quality performance of typical mainframe computers.

Copyright © 1999 IEEE. All rights reserved.

Copyright by the Institute Of Electrical & Electronics Engineers Inc
Fri Jul 20 10:33:56 2001

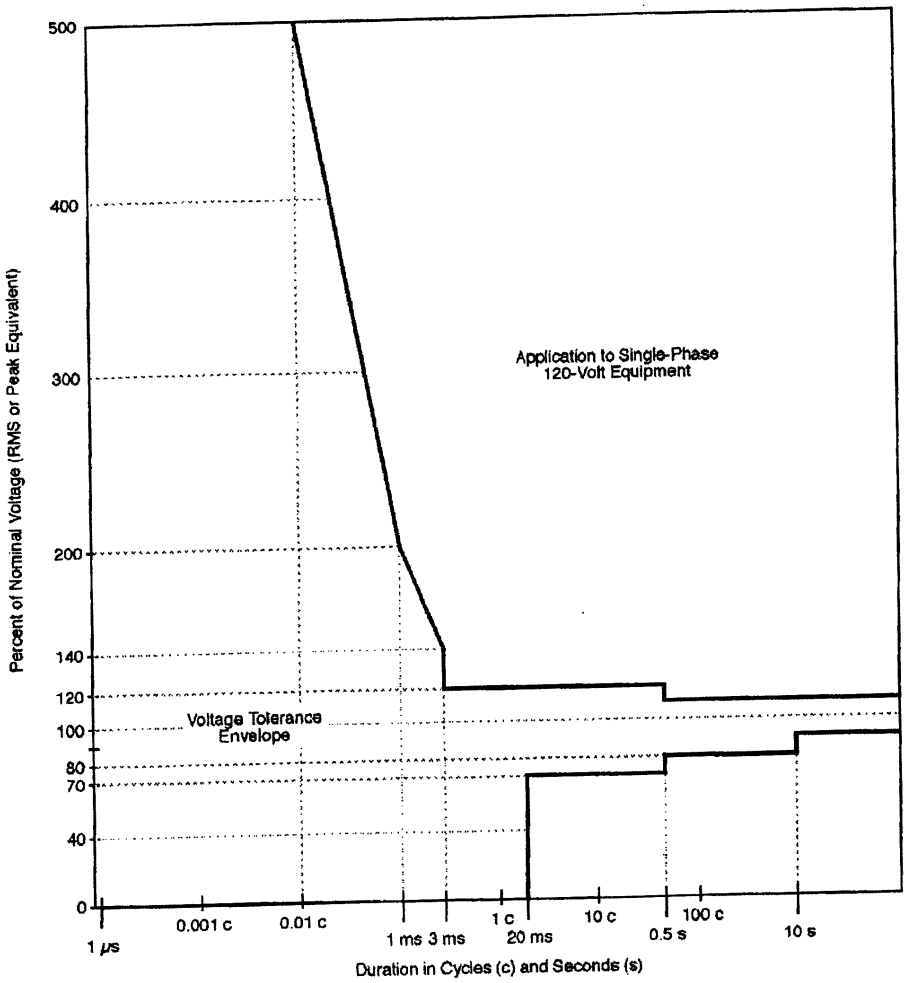

Figure 3-10—New ITIC (CBEMA) curve (1996)

Copyright © 1999 IEEE. All rights reserved.

Copyright by the Institute Of Electrical & Electronics Engineers Inc
Fri Jul 20 10:33:57 2001

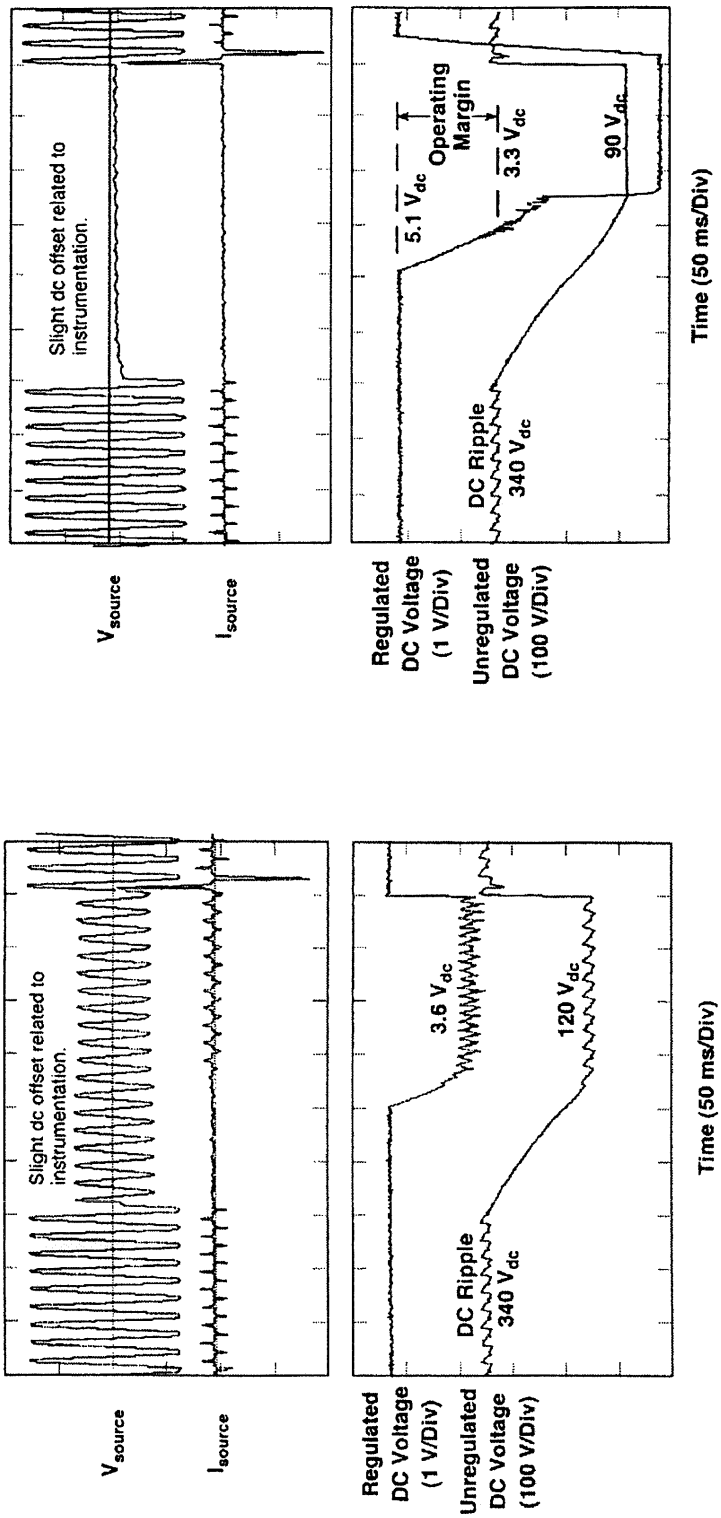

Figure 3-11—Example performance of a switch-mode power supply 5 V dc bus during a momentary event

Copyright © 1999 IEEE. All rights reserved.

Copyright by the Institute Of Electrical & Electronics Engineers Inc
Fri Jul 20 10:33:57 2001

Because of this elevated stature, the ESC-3 Working Group and several sponsors took on the task of developing a curve revision that would be more representative of the power quality performance of modern PCs and other ITE. The basis of this new curve is supported by tests that were conducted on a representative sample of eight PC power supplies supplied by eight different manufacturers. Armed with performance knowledge from the PC power supply test results and some very insightful product performance input from the ESC-3 Working Group, a new curve was defined that was more in line with the expected performance of modern electronic equipment. This new CBEMA curve is shown in Figure 3-10 with an overlay of the old CBEMA curve. There is not much curvature to the new performance envelope, but it will continue to be officially referred to as the "CBEMA curve" with a footnote stating that it was revised in 1996 by the Information Technology Industry Council (ITIC), formerly the CBEMA. The ITIC is the new international representative of the ITE manufacturers.

3.5.1.2 Testing equipment to the new CBEMA limits

Because this new CBEMA curve has some carefully negotiated data points, each of these points may be useful as criteria to test the performance of a given product. The description of how to test to these points has been developed.

In general, testing on the RMS portion of the curve is to be performed with nominal line voltage applied to the power supply. For example, to determine whether a given product can withstand an interruption of 20 ms without upset, power is removed from the unit under test and the output is monitored to determine whether or not that particular unit's output remains unaffected for at least 20 ms. Similarly, the data point at 70%-0.5 s can be evaluated by sagging the input to 70% of nominal for 0.5 s and then bringing the input back to normal. If the output is unaffected, then the product has met the criteria for this data point. It should be noted that the sag to 70% may last longer than 0.5 s, but if the output is not affected until sometime after 0.5 s, then the product has met the limit described by the new CBEMA curve.

On the high-voltage side of the curve, the testing is slightly more difficult because a transient surge generator and an amplifier are required to test for the data points to the left of, and including, the 3 ms duration point. A surge generator is used to inject IEEE C62.41-1991 and IEEE Std C62.45-1992 [B11] defined "combination wave" transients [x] to determine if the product is upset by a transient surge with an amplitude 500% of the nominal peak voltage (850 V_{peak} for a 170 V nominal peak-rated product). The transient is applied at the 90° peak of the nominal waveform or may be applied at other phase angles if desired. For the data point at 200%-1 ms, an amplifier is used to simulate a capacitor-switching transient waveform. The amplitude of this waveform would be 340 V (2 times peak) measured from zero to peak if the unit under test is rated 120 V RMS. The initial ringing frequency (f) for this transient is determined by the equation

$$f = 1/t \tag{1}$$

where t is time (in seconds).

This yields a frequency of 1 kHz when we plug in 1 ms for time. An example of the 200%-1 ms capacitor-switching transient is shown in Figure 3-12.

 Copyright © 1999 IEEE. All rights reserved.

Copyright by the Institute Of Electrical & Electronics Engineers Inc
Fri Jul 20 10:33:58 2001

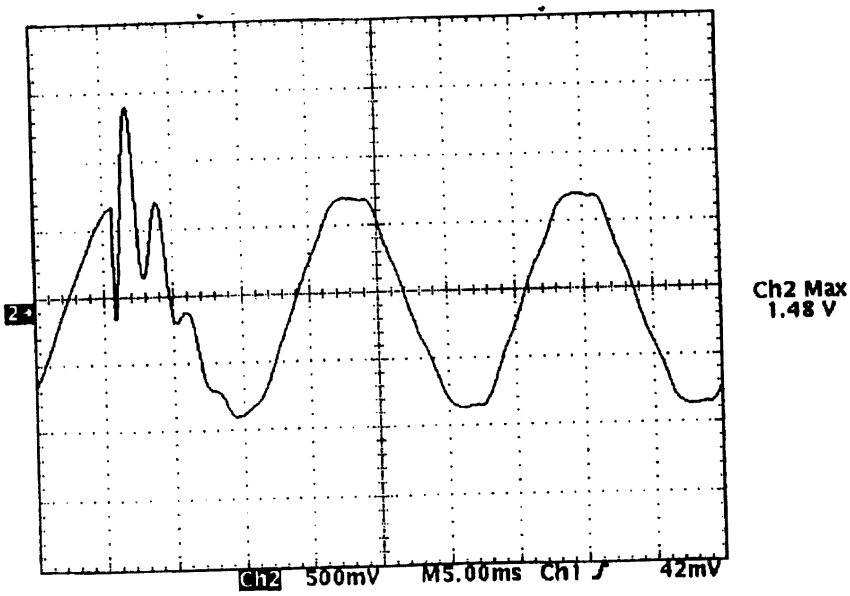

Figure 3-12—Sample capacitor-switching oscillatory transient

Similarly, the data point at 140%-3 ms is tested with a capacitor-switching waveform having a zero to peak magnitude 1.4 times the nominal voltage peak and an initial ring frequency of approximately 330 Hz. All points to the right of the 3 ms mark can be tested in a manner identical to the testing described for the low voltage points, with the exception that a swell or overvoltage is applied for the prescribed duration.

3.5.1.3 Evaluation of what the new CBEMA curve covers

Even with the new look, a CBEMA-type criteria has some important limitations. It is not in itself sufficient criteria for typical office systems. This subclause identifies what should be expected, and what cannot be obtained from a CBEMA-type criteria.

Most modern commercial buildings have a large amount of electronic data processing equipment or ITE. These equipment are usually interconnected to form business-critical IT systems. Often some sort of network links users internally and provides a window for communication with the outside world. For these systems to operate trouble free in their electrical environment, the following three criteria should be met:

a) Power should be provided continuously and with adequate quality;
b) Data links should operate as intended, without noise-related interference;
c) Reference grounds should be at equal potentials and free of transient voltage shifts.

A weak point in any one of these areas of the electrical environment will compromise the IT system's immunity.

Copyright © 1999 IEEE. All rights reserved.

Copyright by the Institute Of Electrical & Electronics Engineers Inc
Fri Jul 20 10:33:59 2001

The CBEMA curve addresses most of criterion (a), excluding noise immunity. This criterion is referred to as the *energy delivery criterion.* It is the voltage levels and durations at the equipment terminals that represent acceptable energy delivered by the power system. For example, during a short-duration, low-rms event, or sag, the CBEMA curve limit tells us the time available before the ITE has insufficient energy to operate. At zero voltage, or outage, the curve shows the ITE ride-through time, when no energy is delivered. A high voltage for a short period of time, less than 10 ms, gives the ITE peak voltage limit, indicating too much energy. For longer time periods both the overvoltage and undervoltage limits of the curve indicate required RMS voltage regulation, or "criteria for the wrong potential energy." These energy-related criteria are covered well by the new CBEMA curve.

In contrast, criterion (b) is not related to energy, and here the CBEMA curve has only indirect relevance. This *data transfer criterion* is concerned with the performance of data links and interactions between power and data lines. For example, the CBEMA surge voltage withstand is shown to be quite high at the ITE terminals, perhaps hundreds or even thousands of volts peak. When these same surges are somehow coupled into data lines, a greatly reduced immunity is anticipated. It may be said that the back door, or communication port entry, represents an increased susceptibility not depicted by a power port-oriented CBEMA curve.

Likewise, criterion (c), referred to as *equal references*, may also bring a vulnerability level to the IT system not depicted by the CBEMA. Considering two typical scenarios, a printer may be ground referenced to a different point than the central processing unit (CPU) driving it, or power to a modem may be referenced to a different point than its telephone service input. Criteria for ground referencing or equalizing potential differences between grounds do not show on the energy-related CBEMA curve. Yet a few volts induced by an otherwise harmless power line surge may halt data transfer or damage an I/O interface.

So it can be seen that the latest CBEMA curve is necessary, but is only a partial picture of the required immunity limits in modern office electronic systems. It provides a very useful energy- and power-interface criteria. However more work is needed to define other criteria for the complete system, particularly for multiport ITE and their interconnecting networks.

3.5.2 Grounding ITE

All equipment incorporating at least two ports is classified under IT systems: a data port for input and output of signals, and a power supply port. The data port can be linked to the public telephone network, to a dedicated terminal, or to a communications bus or system. The significant aspect of such equipment is its two-port configuration; in many instances, the power port design and connections are regulated by one set of standards, while the data port is regulated by another set of standards, if any.

Safety aspects of grounding practices are fulfilled with no conflict by power system designers. On the other hand, designers of IT systems may have different criteria or practices from those of the power system designers. Signal circuits are not always grounded by a low (zero) impedance bond to their equipment (chassis, enclosure) ground. Some of these systems use a reference that is grounded. Others use balanced pairs that may or may not carry their own ground reference. However, at the high frequencies associated with disturbances, all circuits

 Copyright © 1999 IEEE. All rights reserved.

Copyright by the Institute Of Electrical & Electronics Engineers Inc
Fri Jul 20 10:34:00 2001

are capacitively coupled to ground, and to adjacent circuits. Therefore, noise can be injected in these data circuits by power system ground or fault currents, by EMI from other systems or lightning, and by other sources. Remedies to noise problems proposed by IT specialists are sometimes at variance with the requirements for effective grounding from the point of view of power system faults or lightning current protection.

One especially troublesome problem is that of systems featuring several elements in different locations, powered from different branch circuits, but linked by a data cable that carries its own zero reference—a conductor linking the grounding connections in the different locations. Under moderate conditions, the ground loop thus formed can couple noise into the signal path. Under more severe conditions, such as a power system fault or a surge being diverted through the grounding conductors, substantial differences can exist between the "ground" potential of two distant elements of the system; this difference in potential can cause component failures in the circuits.

3.6 Shielded, filtered, enclosed EMI/EMC areas

3.6.1 General information

EMI/EMC requirements are intended to limit the spurious emissions given off by electronic equipment and to ensure that electronic equipment is not adversely affected by such emissions. Typical EMI/EMC requirements are contained in CFR 47 [B2] or in documents promulgated by Technical Committee 77 (Electromagnetic Compatibility) of the International Electrotechnical Commission (IEC). The requirements implied by TEMPEST have different motivations. TEMPEST is a government term referring to the concerns over compromising emanations from any information processing equipment. Many years ago, Department of Defense personnel learned that it is possible to intercept the radio emissions given off by electronic equipment and that, with the aid of computers, classified information could be extracted from these signals by unauthorized parties. As the use of computers has become more commonplace in the office and the "decoding" business, the probability of such interceptions has increased.

TEMPEST requirements are usually achieved by placing a shielded enclosure around the equipment emanating the compromising signal. EMC requirements are achieved the same way. This metal enclosure reflects or absorbs the signals and attenuates them to an undetectable level. In recent years, TEMPEST interest has increased in nongovernment agencies. Some computer manufacturers now offer TEMPEST shielded computers and peripherals for commercial use.

3.6.2 Electrical safety requirements

Shielding hardware and power distribution system designed to meet the objectives of EMI/EMC and TEMPEST must always meet the requirements of the NEC). In particular, the grounding and bonding of shields and associated components must comply with Article 250 of the NEC. Distribution systems and equipment within the shielded area are bonded to the interior of the shield while the outside of the shield is bonded to the facility grounding system

Copyright © 1999 IEEE. All rights reserved.

Copyright by the Institute Of Electrical & Electronics Engineers Inc
Fri Jul 20 10:34:01 2001

(see MIL-HNDBK-419 [B15]). Although this external connection has little or no effect on the equipment within the shield, it is essential to prevent the enclosure from reaching dangerous potentials relative to its surroundings.

3.6.3 Other requirements

A Faraday cage that provides an electromagnetic and radio-frequency shield enveloping the equipment to be protected best describes the basic requirements of EMI/EMC and TEMPEST. This shield isolates the protected circuits from spurious external signals and also attenuates TEMPEST emanations to levels that are too small to be intercepted or analyzed. To be usable, this shield must have penetrations for personnel and equipment access, power lines, control cables, and ventilation. The number of shield penetrations must be held to a minimum since each penetration is a potential leakage source and will require additional maintenance. For those penetrations that cannot be eliminated, proper construction to eliminate leaks is essential. Also, equipment and hardware installed within the shielded area must comply with EMI/EMC requirements in order to tolerate any residual internal electromagnetic fields. Topological grounding methods should also be employed. That is, each shielded region (topological zone) should have a separate grounding system making contact with both the inner and outer shield defining the zone (see Graf and Nanevicz [B8]). For more information on shielded areas, see MIL-HNDBK-419 [B15] and MIL-STD-188/124 [B16].

3.7 Safety systems

Safety systems protect life and property from damage or loss due to accidents. For equipment, the degree of protection should be based on the value and criticality of the facility. Personnel safety is covered rigorously in the NEC and many other standards. Defining this degree requires an in-depth knowledge of the installation and its function. The following questions should be considered when designing these systems:

a) How long will it take to replace the equipment and at what cost?

b) Can the function of the facility be performed elsewhere?

c) Loss of what key component would result in operation interruptions?

Safety systems can be as simple as a manually operated emergency power-off button, or as complex as a fully interlocked system. However, the more complex a fully integrated system becomes, the higher the probability of system confusion or failure. Typical systems include the following functions:

— Smoke and fire protection
— Environmental control
— Smoke exhaust
— Fire extinguishing
— Emergency lighting
— Security

Copyright © 1999 IEEE. All rights reserved.

Copyright by the Institute Of Electrical & Electronics Engineers Inc
Fri Jul 20 10:34:02 2001

The interfacing of a safety system is generally unique for each installation and requires a logical design approach. Through a well-defined logic matrix and sequence priorities, it is possible to develop a system that can be maintained, modified, or expanded with little confusion and minimum expense.

Generally, safety systems operate from 120 V ac, 24 V ac, or 24 V and 12 V dc. In any case, these systems must remain powered at all times. The quality of the power supplied to these systems is as important as that of the power delivered to the IT system. Disturbances in the power supply of the safety system can cause shutdown of the protected system.

3.8 Coordination with other codes, standards, and agencies

3.8.1 General information

There is a large body of guidelines, standards, and codes that address the issues of power quality, safety, and operational integrity of a power system and its connected equipment. These documents are prepared by diverse organizations, including voluntary consensus standards such as the IEEE documents, national position standards such as the recommendations of the IEC, safety standards such as those of the Underwriters Laboratories (UL), performance standards prepared by users' organizations, interchangeable standards prepared by manufacturers trade organizations, and regulatory standards promulgated by local and national agencies.

While conflicts are not intended among these documents, the wide diversity of needs and points of view unavoidably create ambiguities at best and conflicts at worst. As indicated earlier, however, the safety and legal aspects of any conflict mandate a prevailing role for the NEC.

3.8.2 National Electrical Code (NEC)

The NEC is a document prepared by consensus of a number of panels where national experts develop a set of specific and detailed requirements. These requirements are based on long-established practices, complemented by a permanent review process with a three-year cycle. The NEC is generally adopted by local jurisdictions, either in its entirety or with some modifications, and thus becomes enforceable by local inspection authorities. Conspicuous exceptions exist, however, in the domain of application: the power generation and distribution facilities of electric utilities are not regulated by the NEC, but have their own safety standards; U.S. government facilities are not regulated by the NEC, although installations are generally made in accordance with the NEC; some jurisdictions, notably large cities in the U.S., have their own local codes that are usually based on the NEC with additional requirements.

Copyright © 1999 IEEE. All rights reserved.

Copyright by the Institute Of Electrical & Electronics Engineers Inc
Fri Jul 20 10:34:03 2001

3.8.3 UL standards

UL is an independent, not-for-profit organization operating in the field of public safety. It operates product safety certification programs to determine that manufactured materials and products produced under these programs are reasonably safeguarded against foreseeable hazards. UL publishes standards, product directories, and other information. Approximately 500 published standards now exist. These standards are generally recognized by inspection authorities in the U.S. Note, however, that there are other competent testing agencies that can conduct certification programs based upon UL standards.

3.8.4 Other laboratories and testing agencies

Other laboratories and testing agencies have also performed tests on equipment, for the purpose of listing or for providing an independent verification of performance. The Occupational Safety and Health Administration (OSHA) requires listing only by a "recognized" testing agency, without defining such agencies.

3.8.5 National Electrical Manufacturers Association (NEMA) standards

NEMA develops product standards, some of which are recognized as Accredited Standards Committee standards. These standards are generally concerned with equipment interchangeability, but also contain documentation on operation and safety features.

3.8.6 National Institute of Standards and Technology (NIST)

NIST (formerly the National Bureau of Standards) is a U.S. government agency established initially for the purpose of maintaining standards of measurements and calibration of instruments, including tractability. Over the years, the role of NIST has expanded to include a broad range of research activities. The staff of NIST is active in many standards-writing groups, through individual contributions of experts in each specific field. However, NIST does not promulgate standards in the meaning of documents such as IEEE, IEC, or ANSI standards.

3.8.7 International standards

International standards are developed by a different process than the typical voluntary standard process used in the U.S., as exemplified by the present book. The prevalent set of standards is developed by the IEC, and covers most of the engineering and application aspects of electromechanical and electronic equipment. Technical Committees involved in the development of documents related to power and grounding include the following:

a) Technical Subcommittee 28A, for insulation coordination concerns. A report prepared by this subcommittee (IEC 60664-1:1992) discusses in detail an approach whereby overvoltage categories would be assigned to various types of equipment. The overvoltage capability of the equipment would become part of the equipment nameplate information, ensuring proper installation in known environments.

b) Technical Committee 64, for fixed (premises) wiring considerations.

Copyright © 1999 IEEE. All rights reserved.

Copyright by the Institute Of Electrical & Electronics Engineers Inc
Fri Jul 20 10:34:04 2001

c) Technical Committee 65 WG4, for electromagnetic compatibility of industrial process control equipment. This working group has produced and continues to update a family of documents addressing surge immunity, fast transients, and electrostatic discharges (IEC 6100-4-1: 1992).

d) Technical Committee 77, for electromagnetic compatibility. Within the broad scope of all possible disturbances to EMC, this committee is developing documents related to conducted disturbances. These documents are generic descriptions and classifications of the environment, leading to the specification of immunity tests in general. Detailed test specifications for a given equipment are left to the relevant product committee.

3.9 References

This recommended practice shall be used in conjunction with the following publications. When the following standards are superseded by an approved revision, the revision shall apply.

IEC 60664-1: 1992, Insulation coordination for equipment within low-voltage systems—Part 1: Principles, requirements and tests.[3]

IEC 61000-4-1: 1992, Electromagnetic compatibility (EMC)—Part 4: Testing and measurement techniques—Section 1: Overview of immunity tests. Basic EMC Publication.

IEEE Std 141-1993, IEEE Recommended Practice for Electrical Power Distribution for Industrial Plants (*IEEE Red Book*).[4]

IEEE Std 142-1991, IEEE Recommended Practice for Grounding of Industrial and Commercial Power Systems (*IEEE Green Book*).

IEEE Std 446-1995, IEEE Recommended Practice for Emergency and Standby Power Systems for Industrial and Commercial Applications (*IEEE Orange Book*).

IEEE Std 518-1982 (Reaff 1996), IEEE Guide for the Installation of Electrical Equipment to Minimize Noise Inputs to Controllers from External Sources.

IEEE Std 519-1992, IEEE Recommended Practice and Requirements for Harmonic Control in Electric Power Systems.

IEEE Std 1159-1995, IEEE Recommended Practice for Monitoring Electric Power Quality.

[3]IEC publications are available from the Sales Department of the International Electrotechnical Commission, Case Postale 131, 3, rue de Varembé, CH-1211, Genève 20, Switzerland/Suisse (http://www.iec.ch/). IEC publications are also available in the United States from the Sales Department, American National Standards Institute, 11 West 42nd Street, 13th Floor, New York, NY 10036, USA (http://www.ansi.org/).

[4]IEEE publications are available from the Institute of Electrical and Electronics Engineers, 445 Hoes Lane, P.O. Box 1331, Piscataway, NJ 08855-1331, USA (http://www.standards.ieee.org/).

Copyright © 1999 IEEE. All rights reserved.

Copyright by the Institute Of Electrical & Electronics Engineers Inc
Fri Jul 20 10:34:05 2001

IEEE Std 1346-1998, IEEE Recommended Practice for Evaluating Electric Power System Compatibility with Electronic Process Equipment.

IEEE Std C62.41-1991, IEEE Recommended Practice on Surge Voltages in Low-Voltage AC Power Systems.

NFPA 70-1999, National Electrical Code® (NEC®).[5]

3.10 Bibliography

Additional information may be found in the following sources:

[B1] Allen, G. W., and Segall, D., "Monitoring of Computer Installations for Power Line Disturbances," *IEEE Winter Power Meeting Conference Paper,* WINPWR C74 199-6, 1974 (abstract in *IEEE Transactions on PAS,* vol. PAS-93, p. 1023, Jul/Aug 1974).

[B2] CFR 47, Part 15, Telecommunication.[6]

[B3] Dorr, D. "Point of Utilization Power Quality Study Results," IEEE Transactions on Industry Applications, vol. 31, no. 6, pp. 658–666, July/Aug. 1997.

[B4] Dorr, D. et al., "Interpreting Recent Power Quality Surveys to Define the Electrical Environment," *IEEE Transactions on Industry Applications,* vol. 33, no. 6., Nov/Dec 1997.

[B5] EPRI TR-106294-V2, *An Assessment of Distribution System Power Quality: Volume 2: Statistical Summary Report*, Palo Alto, California, May 1996.

[B6] FIPS 94-1983, Guideline on Electrical Power for ADP Installations.[7]

[B7] Goldstein, M., and Speranza, P. D., "The Quality of U. S. Commercial ac Power," *INTELEC (IEEE International Telecommunications Energy Conference),* pp. 28–33 [CH1818-4], 1982.

[B8] Graf, W., and Nanevicz, J. E., "Topological Grounding Anomalies," International Aerospace and Ground Conference on Lightning and Static Electricity, June 20–28, 1984.

[B9] Hughes, M. et al., "Distribution Customer Power Quality Experience," *IEEE Transactions on Industry Applications,* vol. 29, no. 6, Nov./Dec. 1993.

[5]The NEC is published by the National Fire Protection Association, Batterymarch Park, Quincy, MA 02269, USA (http://www.nfpa.org/). Copies are also available from the Institute of Electrical and Electronics Engineers, 445 Hoes Lane, P.O. Box 1331, Piscataway, NJ 08855-1331, USA (http://www.standards.ieee.org/).

[6]CFR publications are available from the Superintendent of Documents, U.S. Government Printing Office, P.O. Box 37082, Washington, DC 20013-7082, USA.

[7]U.S. Regulatory Guides are available from the Superintendent of Documents, U.S. Government Printing Office, P.O. Box 37082, Washington, DC 20013-7082, USA.

 Copyright © 1999 IEEE. All rights reserved.

Copyright by the Institute Of Electrical & Electronics Engineers Inc
Fri Jul 20 10:34:06 2001

[B10] IEEE Surge Protection Standards Collection (C62), 1995 Edition.

[B11] IEEE Std C62.45-1992 (Reaff 1998), IEEE Guide on Surge Testing for Equipment Connected to Low Voltage AC Power Circuits.

[B12] Key, T. S., "Diagnosing Power Quality Related Computer Problems," *IEEE Transactions on Industry Applications,* vol. IA-15, no. 4, July/Aug 1979.

[B13] Martzloff, F. D., "Coordination of Surge Protectors in Low-Voltage AC Power Circuits," *IEEE Transactions on Power Apparatus and Systems,* vol. 99, no. 1, pp. 129–133, Jan/Feb 1980.

[B14] Martzloff, F. D., and Gruzs, T. M., "Power Quality Surveys: Facts, Fictions, and Fallacies," *IEEE Transactions on Industry Applications,* vol. 24, no. 6, pp. 1005–1018, Nov/Dec 1988.

[B15] MIL-HNDBK-419, Grounding, Bonding, and Shielding for Electronic Equipment and Facilities, vol. 1 (Basic Theory) and vol. 2 (Applications).[8]

[B16] MIL-STD-188/124, Grounding, Bonding and Shielding for Common Long Haul Tactical Communication Systems Including Ground Based Communications—Electronics Facilities and Equipment.

[B17] Morrison, R., *Grounding and Shielding in Instrumentation,* New York: John Wiley & Sons, 1977.

[B18] Ott, H., *Noise Reduction Techniques in Electronic Systems,* New York: John Wiley & Sons, 1989.

[B19] Sabin, O. O., Grobe, T. C., and Sundrnam, A., "Surveying Power Quality Levers on U.S. Distribution Systems," *Proceedings of the 13th International Conference on Electricity Distribution (CIREO '95),* Brussels Belgium, May 1995.

[B20] MacGorman, Don et al., Figure 8 from *Lightning Strike Density for the Contiguous United States from Thunderstorm Duration Records.* Norman OK: National Severe Storms Laboratory, Environmental Research Laboratories, NOAA, May 1984.

[B21] *Westinghouse Electrical Transmission and Distribution Reference Book,* 1964.

[8]MIL publications are available from Customer Service, Defense Printing Service, 700 Robbins Ave., Bldg. 4D, Philadelphia, PA 19111-5094.

Copyright © 1999 IEEE. All rights reserved.

Copyright by the Institute Of Electrical & Electronics Engineers Inc
Fri Jul 20 10:34:07 2001

Chapter 4
Fundamentals

4.1 Introduction

Successful, reliable operation of electronic equipment requires adherence to the fundamentals of physics. This chapter reviews appropriate fundamental concepts, with the objective of establishing an appreciation of how things work and their related failure modes. This focus on fundamentals prepares the reader for recommended design practices given in Chapter 8.

Rapid changes in the electronics and communications industries make it almost impossible for design engineers to be experts in all related disciplines. Therefore, a further objective of this chapter is to forge a consensus on related design issues and the expression of these issues via a common language.

4.2 Impedance considerations

An understanding of electrical impedance is fundamental to the design of power systems for electronics. The total system impedance can be grouped into four fundamental parts: the power source; the distribution; the load impedances; and very importantly, the grounding/bonding system's impedances (e.g., power/safety and performance parts). It is important to note that the nature and magnitude of these impedances vary with frequency. The impedances and their frequency-related considerations are discussed in this clause.

4.2.1 Frequencies of interest

The most distinguishing characteristic of power systems and the associated grounding/bonding systems for electronic equipment is that they must behave in an orderly fashion from dc to tens of megahertz. This total frequency range can be conceptualized as two distinct frequency ranges: a power/safety range and a performance range.

4.2.1.1 Power/safety range

The power/safety range typically encompasses a frequency range from dc to several tens of harmonics above the power source's nominal frequency (e.g., 60 Hz). Harmonics as high as the 50th are typically of interest, placing the upper frequency limit to about 3 kHz for the power/safety range. Note that this is all well within the audio frequency range. Impedances in this range tend to be dominated by lumped resistance, inductance, and capacitance. Designers of typical industrial and commercial power systems are generally familiar with the needs and design standards of this frequency range, especially in relation to safety issues [see the National Electrical Code® (NEC®) (NFPA 70-1999)[1] and IEEE Std 446-1995].

[1]Information on references can be found in 4.9.

Copyright © 1999 IEEE. All rights reserved.

Previous page is blank

Copyright by the Institute Of Electrical & Electronics Engineers Inc
Fri Jul 20 10:34:09 2001

4.2.1.2 Performance range

The term *performance range* is defined here to be in the frequency range between tens of kHz and tens of MHz. It is within this range that conducted, coupled, and radiated electromagnetic energy in the conducted mode and both the near- and far-field modes can significantly impact the operational performance of most forms of electronic equipment.

The upper portion of this range has historically been the domain of radio-frequency engineers, and in general is identified as a specialty area, distinctly different from power engineering. Accordingly, there is often a need to apply wave and transmission line theory to the conductors and circuits operating in the performance range as the use of circuit theory is not adequate once conductors achieve significant portions of a wavelength at a given frequency, and this occurs with regularity over the performance range.

In general, once a conductor becomes approximately $\geq 1/20\ \lambda$ at some given frequency, circuit theory no longer applies, so wave and transmission line theory must be used to explain the path's conditions of impedance, how the current and voltage distribution occurs on it, and how signals are reflected and propagated across it as functions of time and velocity factor in the transporting medium. Nowhere is this more important than on grounding and bonding conductor systems. Impedances in this range tend to be characterized by distributed resistive, inductive, and capacitive elements, particularly at the higher frequencies (see NFPA 75-1999).

Wiring techniques that are adequate in the power/safety frequency range are typically unsuitable for use over most of the performance frequency range, unless augmented by special design techniques. These are discussed later in this chapter and are presented in recommended practice form in Chapter 8.

4.2.2 Power source dynamic impedance

Knowledge of the power source's dynamic impedance is key to the understanding of critical load-source interactions. Power source dynamic impedance, Z, is the ratio of incremental internal voltage drop within the same source, dE, to the incremental load current supplied by that source, dI; i.e.,

$$Z = \frac{dE}{dI}$$

Impedance of a power source can be further delineated as being a static or dynamic internal impedance, forward transfer impedance, and output impedance. These basic concepts of source impedance can be illustrated by a simplified equivalent diagram of a transformer. Figure 4-1 shows such a diagram where, for purposes of clarity, the magnetizing inductance of the core is neglected, as are other stray coupling paths.

 Copyright © 1999 IEEE. All rights reserved.

Copyright by the Institute Of Electrical & Electronics Engineers Inc
Fri Jul 20 10:34:09 2001

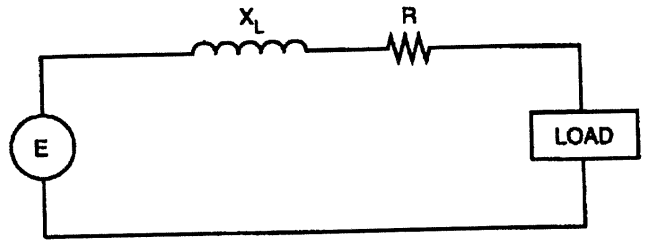

Figure 4-1—First order model of transformer impedances

4.2.2.1 Internal impedance

Internal impedance is the impedance of the power source at its design frequency. In practice it is more convenient to express this as a percentage that can be applied for whatever range of kVA that the subject transformer is available in. For example, the determination of a transformer internal impedance (%Z) is typically done at field level per Equation (4-1).

$$\%Z = 100\left(\frac{I_{\text{full-load}}}{I_{\text{short-circuit maximum}}}\right) \tag{4-1}$$

The internal impedance and %Z is often provided on transformer nameplates.

Due to the method of testing in a transformer factory or test-stand setting, the calculation of %Z requires knowledge of the following:

a) The input voltage necessary to make the current in a short-circuited secondary equal to the rated current;

b) The rated input voltage.

Then, the transformer internal impedance, again expressed as a percent (%Z), is the ratio of item (a) to item (b), multiplied by 100.

Typical dry-type power transformers suitable for most types of electronic equipment are identified in IEEE Std C57.110-1998 [B29].[2] These transformers tend to have impedances in the range of 3–6% at their nominal design frequency (e.g., 60 Hz).

Two examples of %Z and its use follow:

— A transformer with a 5% internal impedance allows 20 times its rated current to flow during short-circuit conditions [(100/5) = 20], assuming sufficient fault current is available on its primary. This is more than sufficient to ensure swift operating times for overcurrent protective devices clearing faults. Conversely, a 20%Z would limit available fault current to no more than 5 times full-load current, and this would not be

[2]The numbers in brackets correspond to those of the bibliography in 4.10.

Copyright © 1999 IEEE. All rights reserved.

Copyright by the Institute Of Electrical & Electronics Engineers Inc
Fri Jul 20 10:34:10 2001

sufficient to ensure a prompt operation of a main overcurrent protective device (at least 10 times current is often recommended).

— Although not to be confused with the subject of voltage regulation, the %Z of a transformer does have a relationship to load changes and output voltage stability as follows:

A transformer with a 5% internal impedance also allows a 5% voltage variation to occur on its output when a step change from no-load to full-load occurs. With a transformer of 2.5%Z, this would be reduced to a 2.5% variation. Conversely, a 20%Z rating would allow a 20% voltage variation and this may be too great for most electronic loads to tolerate without malfunction (see FIPS Pub 94-1983).

It is desirable to have a low internal impedance, such that supply voltage variances are small for normal swings in load currents. However, if the source impedance is too low, possible short-circuit current can be excessive to the point that special circuit breakers or supplementary current-limiting fuses are required to interrupt fault current.

Note that to determine the full range of voltage variation from a transformer's output under varying load conditions, the impedance characteristics of the primary circuit supplying it must also be considered. Such series impedance will act in concert with the transformer's %Z, and will in almost all cases produce larger voltage variations than indicated above for %Z alone.

4.2.2.2 Forward transfer impedance (transformers)

Forward transfer impedance is an attribute similar to internal impedance, but at frequencies other than the nominal power system's fundamental frequency (e.g., 60 Hz). Forward transfer impedance is often an important part of a transformer-based power conditioning device's specification and the related performance claims made by its original equipment manufacturer (OEM). Forward transfer impedance assumes that a signal source exists on the input side of the transformer and the secondary-connected load is the target. Knowledge of the forward transfer impedance allows the designer to assess the capability of the power source to

a) Provide load current at the harmonic frequencies needed to preserve a suitable output voltage waveform. Generally, the highest frequency of interest is 3 kHz for 50–60 Hz power systems ($h = 50$), and 20–25 kHz for nominal 400 Hz power systems (which is also about 50 times the supply frequency).

b) Pass unwanted frequencies, such as transverse-mode noise, between the input and output terminals.

Of the two above parameters, the second is more important in typical cases, such as where transformer-based power conditioning equipment is being considered for an application.

A common method for determining forward transfer impedance of transformers (and filters) is to measure simultaneously an input test signal voltage and short-circuited output current. The ratio is the forward transfer impedance. Testing may be done at a single frequency of interest, or more often it is undertaken over a wide range of frequency to determine the overall bandpass

Copyright © 1999 IEEE. All rights reserved.

Copyright by the Institute Of Electrical & Electronics Engineers Inc
Fri Jul 20 10:34:11 2001

characteristic for forward transfer impedance. This may be done by using a suitably amplified output from a signal generator and plotting the results of several spot-frequency measurements. Alternately, a sweep signal generator with slow sweep-rate and slaved $x-y$ recording indicator may be employed for the dynamic development of bandpass curves.

Generally, the forward transfer impedance will increase with increasing frequency. During testing, points of resonance may be encountered within the test frequency range and very high or low impedances may be noted to occur at these points, depending upon whether the resonance is from series or parallel parasitic elements. These resonances may act to further beneficially attenuate, or to unwantedly accentuate, the transfer of signal across the transformer, again depending upon the type of resonance.

It is desirable to have a minimum forward transfer impedance at the nominal power frequency (this relates to transformer efficiency) and impedance as low as possible for its low-order harmonics (e.g., up to 50th harmonic). At frequencies above the 50th harmonic, a high value of forward transfer impedance is highly desirable to attenuate transient voltages conducted by the power system toward the load. In most cases testing should be undertaken to at least several hundreds of kHz, and should not be stopped when the first or subsequent resonant points are reached. Testing to at least 1 MHz is recommended.

4.2.2.3 Output impedance (transformers)

Output (reverse transfer) impedance of a power source is an attribute similar to forward transfer impedance, but it describes the impedance of the power system as seen from the load looking into the transformer from the secondary side.

If the load generates harmonic currents (e.g., it is a harmonic current source), then these currents circulate on the wiring system between the load and the power source in much the same manner as fundamental currents do. Similar to fundamental currents, these higher-frequency currents produce voltage drops across the distribution wiring system's impedance and the source's internal impedance—all of which algebraically add to (or subtract from) the power system voltage. Therefore, the amplitude and waveshape of the line voltage can change significantly, and harmonic voltage waveform distortion results. Accordingly, it is very important that the power source path (and particularly the supply transformer) have low-output impedance to present to both the fundamental and to these harmonic currents.

At higher frequencies than those produced by the harmonics, a high-output impedance provides some beneficial filtering of high-frequency transients as generated from the load(s) (e.g., due to $-e = L\, di/dt$ switching), and which can attenuate them before they can be unwantedly impressed onto the transformer's input supply circuit. Once this occurs, they are unwantedly propagated upstream to other parts of the distribution system. Transformer output impedances generally rise with frequency, but parasitic reactances within the transformer can allow series resonances that may lower output impedance at specific frequencies and unwantedly allow these frequencies to easily pass across the transformer from the output to the input.

Copyright © 1999 IEEE. All rights reserved.

Copyright by the Institute Of Electrical & Electronics Engineers Inc
Fri Jul 20 10:34:12 2001

4.2.2.4 Interwinding electrostatic shielding (transformers)

A solidly grounded bypass capacitor that creates a capacitive voltage divider and current shunt can be introduced into the interwinding capacitance between the primary and secondary in the typical isolation transformer by adding a metal foil between the windings, and then by suitably bonding it in low-inductance fashion to equipment ground within the isolation transformer (see Figure 4-2 and Lewis [B34]). This has three major effects:

Copyright by the Institute Of Electrical & Electronics Engineers Inc
Fri Jul 20 10:34:13 2001

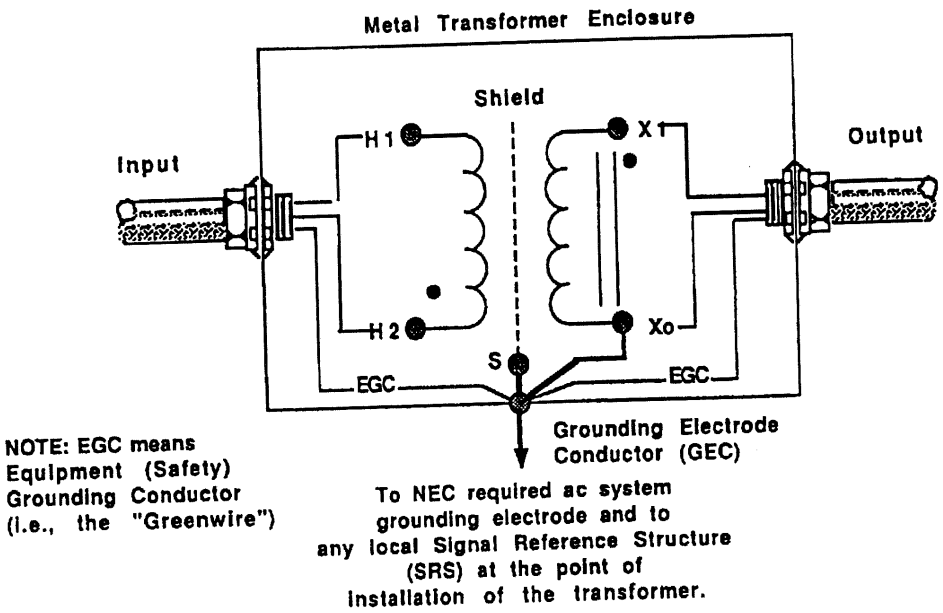

Figure 4-2—Typical electrostatically shielded isolation transformer (single-layer shield shown)

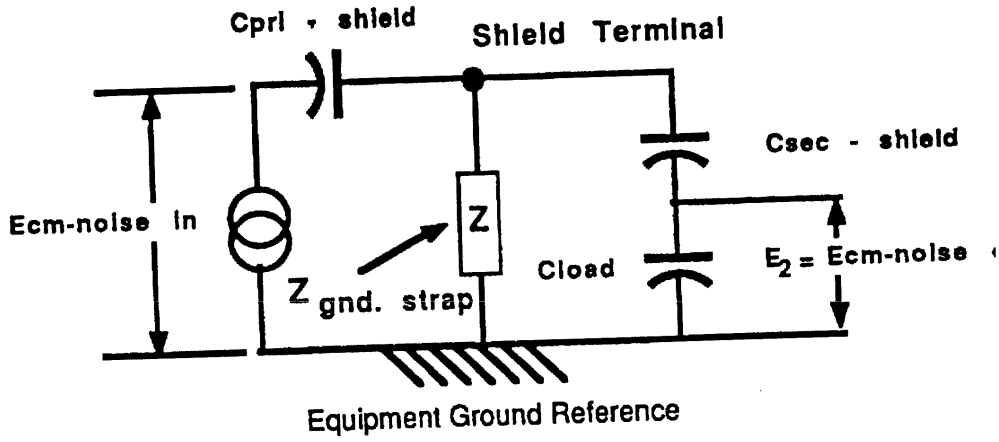

Figure 4-3—Electrostatic shield in transformer that forms a capacitive voltage divider within the isolation transformer for CM noise currents

Copyright © 1999 IEEE. All rights reserved.

Copyright by the Institute Of Electrical & Electronics Engineers Inc
Fri Jul 20 10:34:14 2001

Adding more (ungrounded) shields to the primary and secondary windings and operating them at their associated winding's line-voltage potential permits a beneficial reduction in common-mode to transverse-mode noise conversion across the transformer. Several tens of decibels of attenuation across a wide range of frequencies can be realized by this simple method of additional shielding.

At higher frequencies, where wave and transmission line theory must be used, the interwinding shield appears as a point of impedance mismatch from which transient currents (and voltages) can be reflected and re-reflected. This produces attenuation on the downstream side of

Copyright by the Institute Of Electrical & Electronics Engineers Inc
Fri Jul 20 10:34:15 2001

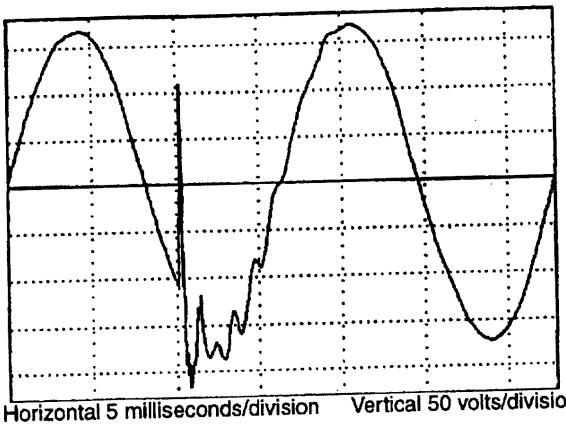

Horizontal 5 milliseconds/division Vertical 50 volts/division

Source: The Dranetz Field Handbook [B54].

Figure 4-4—Phase-neutral transient resulting from addition of capacitive load to the electrical system

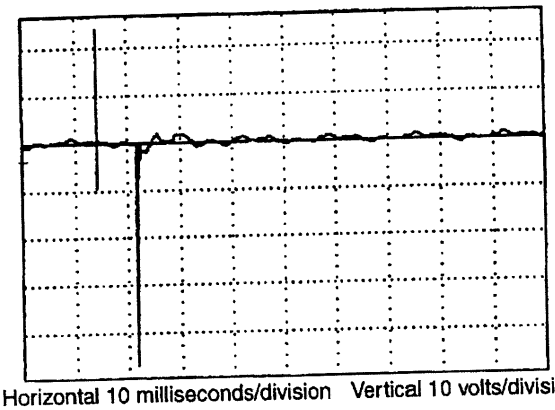

Horizontal 10 milliseconds/division Vertical 10 volts/division

Source: The Dranetz Field Handbook [B54].

NOTE—Neutral-ground transients must typically be measured at a panelboard that is remote from the involved ac system's neutral-to-ground/chassis bond for ac system grounding. Otherwise, the only voltage to be observed will be that developed across the N-G bond jumper itself, and this is likely to be close to zero.

Figure 4-5—Neutral-ground transient resulting from addition of inductive load from the electrical system

Copyright © 1999 IEEE. All rights reserved.

Copyright by the Institute Of Electrical & Electronics Engineers Inc
Fri Jul 20 10:34:15 2001

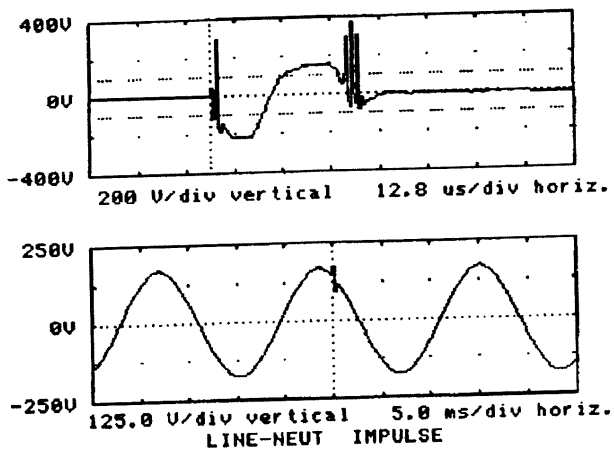

Source: McEachern [B40].

Figure 4-6—Phase-neutral transient resulting from arcing and bouncing contactor

Actual impedances of ac feeders and branch circuits vary considerably, due both to their configurations and loads. For purposes of analysis and modeling, equivalent circuits of ac branch circuits have been identified (see Golde [B15] and Sunde [B52]). Figure 4-7 depicts the resulting ac branch circuit impedance for such a model as reported in Golde [B15]. The general behavior of impedance with frequency, shown in Figure 4-7, is typical for most ac feeder and branch circuits; but actual impedances can vary considerably and resonances above 1 MHz can greatly alter the impedance behavior. It should also be noted that the commonly, but incorrectly, assumed fixed characteristic impedance of 50 Ω for ac distribution circuits can contribute to significant errors if used to calculate surge energy levels (see 4.6.6).

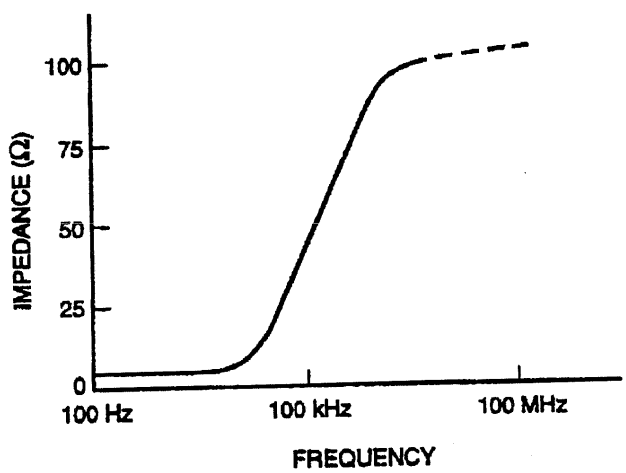

Figure 4-7—Typical ac distribution branch circuit impedance vs. frequency (no load connection)

Copyright © 1999 IEEE. All rights reserved.

Copyright by the Institute Of Electrical & Electronics Engineers Inc
Fri Jul 20 10:34:16 2001

Table 4-1—Example cable impedances at high frequencies (copper cable suspended in free air)

(a) #4 AWG building wire (25 mm^2)

Length in ft (m)	L (μH) (>1 MHz)	@ 1 MHz		@ 10 MHz		@ 100 MHz	
		Rf (Ω)	ωL = Z (Ω)	Rf (Ω)	ωL = Z (Ω)	Rf (Ω)	ωL = Z (kΩ)
10 (3)	4	0.05	26	0.15	260	0.5	2.6
20 (6.1)	9	0.1	57	0.3	570	1.0	5.7
40 (12.2)	20	0.2	125	0.6	1250	2.0	12.5
60 (18.3)	31	0.3	197	0.9	1970	3.0	19.7
100 (30.5)	55	0.5	350	1.5	3500	5.0	35.0

(b) #4/0 AWG building wire (107 mm^2)

Length in ft (m)	L (μH) (>1 MHz)	@ 1 MHz		@ 10 MHz		@ 100 MHz	
		Rf (Ω)	ωL = Z (Ω)	Rf (Ω)	ωL = Z (Ω)	Rf (Ω)	ωL = Z (kΩ)
10 (3)	3.6	0.022	23	0.07	230	0.22	2.30
20 (6.1)	8	0.044	51	0.14	510	0.44	5.10
40 (12.2)	18	0.088	113	0.28	1130	0.88	11.3
60 (18.3)	28	0.132	176	0.42	1760	1.32	17.6
100 (30.5)	50	0.220	314	0.70	3140	2.20	31.4

In the higher-frequency ranges where wave and transmission line theory predominates over circuit theory, the typical feeder and branch circuit assumes the character of a lossy transmission line of unevenly distributed impedance. It also presents itself with impedance mismatched terminations at each end (and at any midpoint taps or other connections), which produce reflections and re-reflections of transient currents (or voltages) being propagated on the path.

Copyright © 1999 IEEE. All rights reserved.

Copyright by the Institute Of Electrical & Electronics Engineers Inc
Fri Jul 20 10:34:17 2001

4.2.4 Load impedance

Electronic equipment typically contains motors, transformers, and rectifiers. Outputs of these transformers and rectifiers are typically electronically regulated to provide constant voltage to load circuits. Insight can be gained as to the nature and operation of these loads by analyzing their basic components.

The basic components of (passive) load impedance each have a distinct variation with frequency. Resistance, R, ideally does not change with frequency. Therefore, its curve is simply a straight horizontal line, with a magnitude of R ohms above the frequency axis [see Figure 4-8].

Inductive reactance, X_L, linearly increases with frequency (of the form $y = mx + b$). Inductive reactance vs. frequency is plotted in Figure 4-9, with a slope equal to the inductance, L, of the inductor and intercepting at the origin ($X_L = \omega L + 0$).

Capacitive reactance, X_C, is a hyperbolic function of frequency of the form $yx = k$, where the frequency, ω, is the independent variable and $-1/C$ is the constant. Capacitive reactance vs. frequency [$X_c = -1/(\omega C)$] is plotted in Figure 4-10. From Figure 4-9 and Figure 4-10 it can be seen that, as frequency increases, inductive reactance becomes the dominant factor.

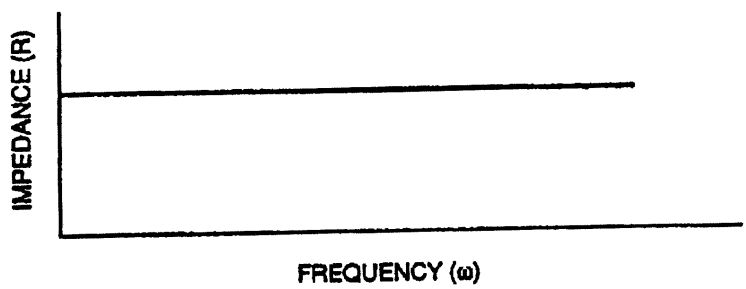

Figure 4-8—Passive load resistance vs. frequency

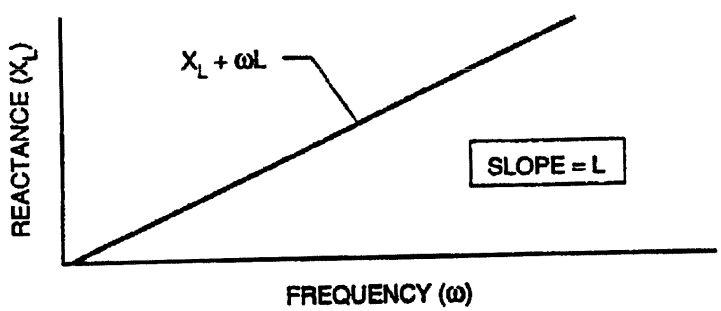

Figure 4-9—Passive load inductive reactance vs. frequency

Copyright © 1999 IEEE. All rights reserved.

Copyright by the Institute Of Electrical & Electronics Engineers Inc
Fri Jul 20 10:34:17 2001

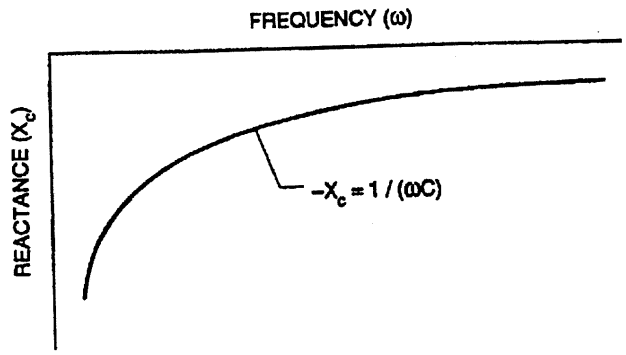

Figure 4-10—Passive load capacitive reactance vs. frequency

4.2.5 AC system resonance considerations

AC circuits characteristically have

a) Capacitive and inductive elements; and

b) The means to transfer oscillatory energy between these elements.

Copyright by the Institute Of Electrical & Electronics Engineers Inc
Fri Jul 20 10:34:18 2001

Copyright by the Institute Of Electrical & Electronics Engineers Inc
Fri Jul 20 10:34:19 2001

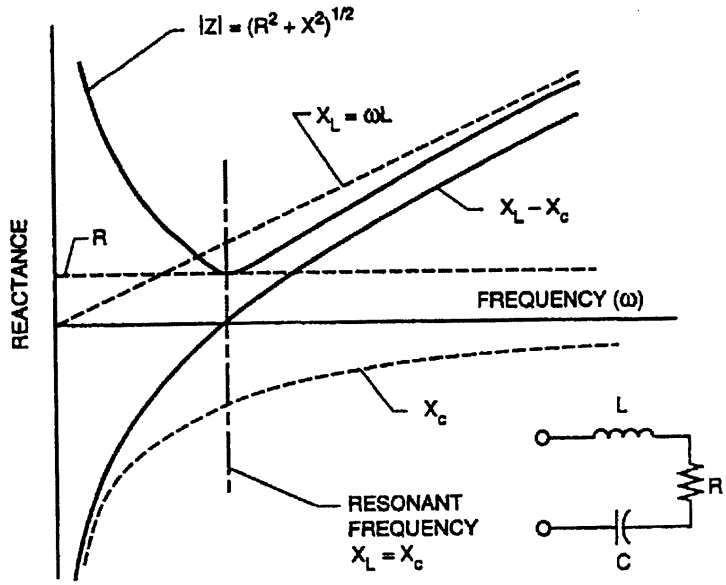

Figure 4-12—Series R-L-C circuit impedance vs. frequency

Due to the fact that parallel resonant paths represent very high impedances for currents at their resonant frequency, they can create voltage-breakdown conditions on conductors and components within, or connected to, the circuit. Harmonic currents at the resonant frequency also may create conditions of high-harmonic voltage across the circuit's terminals, which are also connected to the ac source and its load(s). Thus, the resonant tank circuit appears as a voltage source at the resonant frequency. The resonant tank circuit feeds the distribution system in parallel with the fundamental voltage source. As a result, this frequency-dependent harmonic voltage adds algebraically to the fundamental frequency voltage and to any other harmonic voltage waveforms on the circuit, to produce harmonic distortion of the fundamental voltage waveform.

Parallel resonant circuits behave inversely to the series resonant circuit. They exhibit very high impedance at resonance, whereas the series resonant circuit exhibits a very high admittance (low impedance). A diagram of parallel resonance, Figure 4-13, appears similar to the series resonance diagram, Figure 4-12, when voltages are replaced by currents, currents replaced by voltages, and associated parameters are interchanged with their "inverse equivalents" (see Greason [B18]). The total set of terms utilized in Figure 4-13 and their equivalent series resonance terms are as follows:

Copyright © 1999 IEEE. All rights reserved.

Copyright by the Institute Of Electrical & Electronics Engineers Inc
Fri Jul 20 10:34:20 2001

Terms	Equivalent series resonance terms
Current (I)	Voltage (V)
Admittance (V)	Impedance (Z)
Conductance (G)	Resistance (R)
Susceptance (B)	Reactance (X)
Capacitance (C)	Inductance (L)

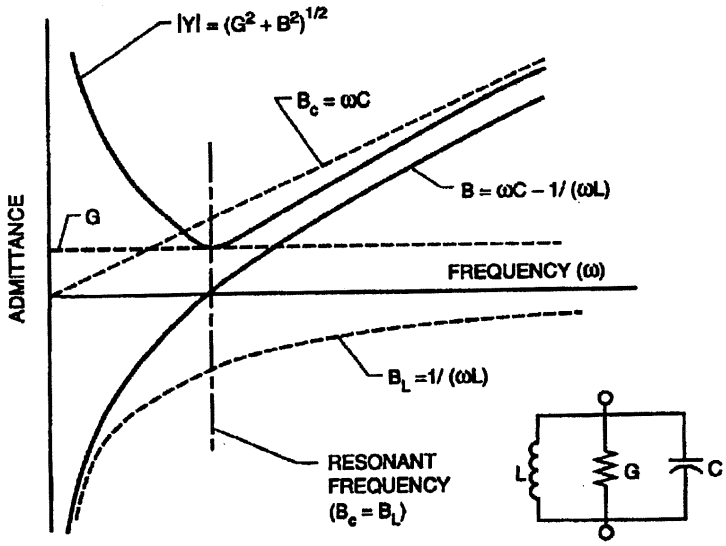

Figure 4-13—Parallel R-L-C circuit impedance vs. frequency

Considerable current can oscillate between the inductive and capacitive storage elements of the circuit when nonlinear loads, with a characteristic harmonic near the parallel resonant frequency, exist in the circuit. Voltage distortion results from these high oscillating current levels. Under certain conditions the oscillating currents can also emit electromagnetic energy, which can interfere with adjacent signal circuits.

In summary, and by comparison, series-resonant circuit currents oscillate through the ac supply system paths and their source, while parallel-resonant circuits confine such current to the parallel circuit's own loop. Therefore, series resonant circuits involve the supply, load, and intervening wiring (and all power transport components in the wiring path), with current at

Copyright © 1999 IEEE. All rights reserved.

Copyright by the Institute Of Electrical & Electronics Engineers Inc
Fri Jul 20 10:34:21 2001

the resonant frequency; and parallel resonant circuits impress voltages (at the resonant frequency) on their source, load, and on the wiring system. These two conditions represent the underlying mechanism for the production of the most common forms of harmonic voltage waveform distortion on the ac wiring system.

4.2.5.3 Resonance on feeders and branch circuits

The conductors used to form feeders and branch circuits possess both distributed self-inductance and distributed capacitance. These are called stray or parasitic reactances. The self-inductance portion is series distributed in longitudinal fashion along the length of the feeder, branch circuit, or both, while the capacitance portion is shunt distributed between all conductors as well as to equipment ground along the same path. Equipment ground is defined as any enclosing metallic raceway, a "greenwire" [e.g., an equipment grounding conductor (EGC)], or nearby grounded metal if the raceway is nonmetallic. This arrangement forms into a transmission line with reactive circuit elements connected across the ends in the form of the ac power source and load. Both series and parallel resonant conditions are thus capable of occurring under proper conditions of excitement. Exciting current is generally provided by switching in the load-source current path, although an exciting current can also be introduced from the equipment ground path via the shunt capacitance.

Loads, such as variable-frequency speed drives (VFDs) for motors, are known to be capable of producing high-frequency currents sufficient to excite the resonant circuit in the feeder, branch circuit, or both. Reflected waves from the motor and power source that oscillate

Copyright by the Institute Of Electrical & Electronics Engineers Inc
Fri Jul 20 10:34:23 2001

Lightning, and in some cases ground faults, can similarly excite the long feeder or branch circuit resonances via the shunt capacitance path from ground. Near-field coupling in the H field from nearby sources of high-frequency noise sources can also induce excitation current into the self-inductance of the resonant circuit of the feeder or branch circuit.

4.3 High- and low-frequency regimes defined

Throughout this book and in typical discussions about the control of electrical "noise," surges, and lightning impulses, the terms *low frequency* (LF) and *high-frequency* (HF) will be used—typically without any useful definition being rendered at the point of usage. Accordingly, this important subject is addressed in the following paragraphs, which must be understood before going further into the material presented in this and some subsequent chapters of this book.

This subject is important since techniques and explanations of things that are useful at a frequency of 20 kHz or less are often totally unsuitable for use at higher frequencies. In similar fashion, the electrical size of the circuit under discussion will have to be specified in order to know how to discuss the circuit and what techniques need to be applied to control interference of all types within it (see Goedbloed [B17]). Hence, we begin by defining the basic current loop.

4.3.1 Definition of the basic current loop

A typical basic current loop is shown in Figure 4-14. Using circuit theory it can be seen that if a sinusoidal voltage E_S is used to drive a current I_a in the closed loop to the load Z_L, along path length L_m, all current and voltage events around the loop will be considered as occurring instantaneously and in continuous fashion for the duration for which E_S is applied. This is a low-frequency view of this circuit appropriate for dc and steady-state conditions, but does not explain what happens at the moment of power application or removal, and at generally higher frequencies, as will be explained.

However, it is the electrical length of the current loop, defined by L_m as the distance between points I_a and I_b, that determines the point at which circuit theory, as discussed above, or transmission line (wave) theory, as discussed below, is applied. This demarcation point between the two regimes is called the boundary point.

Above the boundary point it is seen that not all things happen simultaneously in the current loop—it takes time for things to occur and when they do, they occur sequentially with a true time lag for currents and voltages to travel around in the current loop. Here is where transmission line or wave theory must be used in order to explain what happens in the circuit since circuit theory does not allow for things that do not occur simultaneously. Note that the time it takes a wave to move from point *a* to point *b* in a physical medium (e.g., a wire) as opposed to a vacuum, is significantly longer than the speed of light.

Copyright © 1999 IEEE. All rights reserved.

Copyright by the Institute Of Electrical & Electronics Engineers Inc
Fri Jul 20 10:34:23 2001

Table 4-2—Standard nominal system voltages and voltage ranges[a]

VOLTAGE CLASS	NOMINAL SYSTEM VOLTAGE			Nominal utilization voltage (Note 1)	VOLTAGE RANGE A			VOLTAGE RANGE B		
					Maximum	Minimum		Maximum	Minimum	
	Two-wire	Three-wire	Four-wire	Two-wire Three-wire Four-wire	Utilization and service voltage	Service voltage	Utilization voltage	Utilization and service voltage	Service voltage	Utilization voltage
Low voltage (Note 1)	Single-phase systems									
	120			115	126	114	110	127	110	106
		120/240		**115/230**	**126/252**	**114/228**	**110/220**	**127/254**	**110/220**	**106/212**
	Three-phase systems									
			208 Y/120	**200**	**218 Y/126**	**197 Y/114**	**191 Y/110**	**220 Y/127**	**191 Y/110** (Note 2)	**184 Y/106** (Note 2)
			240/120	**230/115**	**252/126**	**228/114**	**220/110**	**254/127**	**220/110**	**212/106**
		240		230	252	228	220	254	220	212
			480 Y/277	**460**	**504 Y/291**	**456 Y/263**	**440 Y/254**	**508 Y/293**	**440 Y/254**	**424 Y/245**
		480		**460**	**504**	**456**	**440**	**508**	**440**	**424**
		600		575	630	570	550	635	550	530
Medium voltage		2 400			2 520	2 340	2 160	2 540	2 280	2 080
			4 160 Y/2 400		4 370 Y/2 520	4 050 Y/2 340	3 740 Y/2 160	4 400 Y/2 540	3 950 Y/2 280	3 600/2 080
		4 160			**4 370**	**4 050**	**3 740**	**4 400**	**3 950**	**3 600**
		4 800			5 040	4 680	4 320	5 080	4 560	4 160
		6 900			7 240	6 730	6 210	7 260	6 560	5 940
			8 320 Y/4 800		8 730 Y/5 040	8 110 Y/4 680	—	8 800 Y/5 080	7 900 Y/4 560	—
			12 000 Y/6 930		12 600 Y/7 270	11 700 Y/6 760	—	12 700 Y/7 330	11 400 Y/6 580	—
			12 470 Y/7 200		**13 090 Y/7 560**	**12 160 Y/7 020**	—	**13 200 Y/7 620**	**11 850 Y/6 840**	—
			13 200 Y/7 620		**13 860 Y/8 000**	**12 870 Y/7 430**	—	**13 970 Y/8 070**	**12 504 Y/7 240**	—
			13 800 Y/7 970		14 490 Y/8 370	13 460 Y/7 770	—	14 520 Y/8 380	13 110 Y/7 570	—
		13 800			**14 490**	**13 460**	**12 420**	**14 520**	**13 110**	**11 880**
			20 780 Y/12 000		21 820 Y/12 600	20 260 Y/11 700	—	22 000 Y/12 700	19 740 Y/11 400	—
			22 860 Y/13 200		24 000 Y/13 860	22 290 Y/12 870	—	24 200 Y/13 970	21 720 Y/12 540	—
		23 000			24 150	22 430	—	24 340	21 850	—
			24 940 Y/14 400		**26 190 Y/15 120**	**24 320 Y/14 040**	—	**26 400 Y/15 240**	**23 690 Y/13 680**	—
			34 500 Y/19 920		**36 230 Y/20 920**	**33 640 Y/19 420**	—	**36 510 Y/21 080**	**32 780 Y/18 930**	—
		34 500			36 230	33 640	—	36 510	32 780	—
					Maximum voltage					
		46 000			48 300					
		69 000			**72 500**					
High voltage		**115 000**			**121 000**					
		138 000			**145 000**					
		161 000			169 000					
		230 000			**242 000**					
Extra-high voltage		**345 000**			**362 000**					
		500 000			**550 000**					
		765 000			**800 000**					
		1 100 000			**1 200 000**					

NOTES:

(1) Minimum utilization voltages for 120–600 V circuits not supplying lighting loads are as follows:

Nominal system voltage	Range A	Range B
120	108	104
120/240	**108/216**	**104/208**
(Note 2) **208 Y/120**	**187 Y/108**	**180 Y/104**
240/120	**216/108**	**208/104**
240	216	208
480 Y/277	**432 Y/249**	**416 Y/240**

(2) Many 220 V motors were applied on existing 208 V systems on the assumption that the utilization voltage would not be less than 187 V. Caution should be exercised in applying the Range B minimum voltages of this table and Note 1 to existing 208 V systems supplying such motors.

Source: ANSI C84.1-1995.

[a]Preferred system voltages in bold-face type.

Copyright © 1999 IEEE. All rights reserved.

Copyright by the Institute Of Electrical & Electronics Engineers Inc
Fri Jul 20 10:34:30 2001

Typically, momentary interruptions are the result of a variety of normal and abnormal operations in the electric power supplier's distribution system (see IEEE Std 446-1995 and Allen and Segall [B1]). Due to the definition of a power interruption generally used by electric power suppliers vs. the capabilities of electronic load equipment, distribution circuits that the electric power supplier might consider to be reliable may be totally inadequate to the user of electronic load equipment. It is advisable that users of electronic equipment work with their local electric power supplier to determine operating characteristics of the particular distribution circuits in question, considering both the frequency of momentary interruptions and other pertinent reliability indices—including power quality.

Voltage waveform disturbances at the electric power supplier's feeder level have been monitored (see Allen and Segall [B1], Edison Electric Institute [B11], and Golde [B15]), and compared and contrasted (see Martzloff and Gruzs [B37]). The general conclusion is that line voltage sags are most frequent, and thus most likely to contribute to electronic load disruptions. They are followed by surges, interruptions, and swells, in lesser probabilities. The actual percentage of each type of voltage disturbance varies with time, location, the response characteristics, and the threshold settings of the particular power quality monitoring instrument being used. All things being otherwise equal, these variances are most highly influenced by the particular threshold settings utilized on the monitoring equipment.

User equipment residing near locations where lightning enters the electric power supplier's distribution system will experience high-energy surge conditions via the building's service entry wiring since it provides the interface to the electric power supplier's ac distribution system. But user equipment located at sites further away from the strike location most likely will experience momentary sag conditions as opposed to surges. This typically occurs when one or more lightning "arrestors" located on the electrical supply system's distribution wiring go into operation, and are located between the strike point and the service entry of the user's site. The momentary sags correctly result from deliberate current-shunting actions of the electric power supplier's lightning-protection equipment, which locally load down the ac distribution system during its operation. To a degree this action can also be randomly duplicated by arcing to ground from the conductors, or from insulator flashovers on the distribution system's wiring.

4.5 Load and power source interactions

Interactions of interest between electronic load equipment and their power sources (and sometimes their grounding systems) primarily result in transient disturbances or nearly continuous distortions to the system voltage waveform. Under the heading of "Voltage parameter affecting loads," Table 4-3 summarizes these sources of voltage waveform disturbances, distortions, and their general characteristics (see The Dranetz Field Handbook [B54] and McEachern [B40]). When ameliorating these variances, it is often helpful to know their related current waveforms. For example, certain source/load interactions (e.g., switching) result in short first-transition-time voltage transients (surges). The reader is referred to 4.6 for a discussion of surges.

Copyright © 1999 IEEE. All rights reserved.

Copyright by the Institute Of Electrical & Electronics Engineers Inc
Fri Jul 20 10:34:31 2001

Table 4-3—Matching sensitive load and power source requirements with expected environments

Voltage parameter affecting loads	Typical range of power sources	Typical immunity of electronic loads		
		Normal	Critical	Units affected and comments
Over and undervoltage	+6%, –13.3%	+10%, –15%	±5%	Power supplies, capacitors, motors. Component overheating and data upset.
Swells/sags	+10%, –15%	+20%, –30%	±5%	Same as above.
Transients, impulsive and oscillatory, power lines	Varies: 100–6000 V	Varies: 500–1500 V	Varies: 200–500 V	Dielectric breakdown, voltage overstress. Component failure and data upset.
Transients, impulsive and oscillatory, signal lines	Varies: 100–6000 V	Varies: 50–300 V	Varies: 15–50 V	Same as above.
ESD	< 45 kV 1000–1500 V	Varies widely: 200–500 V	Varies widely: 15–50 V	Signal circuits. Dielectric breakdown, voltage overstress. Component failure and data upset. Rapid changes in signal reference voltage.
RFI/EMI (conducted) (normal and common mode)	10 V up to 200 kHz less at higher frequency	Varies widely: 3 V typical	Varies widely: 0.3 V typical	Signal circuits. Data upset, rapid changes in signal reference voltage.
RFI/EMI (radiated)	< 50 kV/m, < 200 kHz < 1.5 kV/m, > 200 kHz	Varies widely with shielding	Varies widely with shielding	Same as above.
Voltage distortion (from sine wave)	5–50% THD	5–10%	3–5%	Voltage regulators, signal circuits, capacitor filters, capacitor banks. Overheating, undercharging.
Phase imbalance	2–10%	5% max	3% max	Polyphase rectifiers, motors. Overheating.
Current parameter affecting sources	**Typical range of load current**	**Typical susceptibility of power sources**		
		Normal	**Critical**	**Units affected and comments**
Power factor	0.85–0.6 lagging	0.8 lagging	< 0.6 lagging or < 0.9 lagging	Power source derating or greater capacity source with reduced overall efficiency.
Crest factor	1.4–2.5	1.0–2.5	> 2.5	1.414 normal; impact function of impedances at 3rd and higher harmonics (3–6% Z). Voltage shape distortion.
Current distortion	0–10% total rms	5–10% total 0–5% largest	5% max total 3% largest	Regulators, power circuits. Overheating.
DC current	Negligible to 5% or more	< 1%	As low as 0.5%	Half-wave rectifier loads can saturate some power sources, trip circuit breakers.
Ground current	0–10 A rms + noise and surge currents	> 0.5 A	< 0.1 A	Can trip GFI devices, violate code, cause rapid signal reference voltage changes.
Frequency parameter affecting loads	**Typical range of power sources**	**Typical immunity of electronic loads**		
		Normal	**Critical**	**Units affected and comments**
Line frequency	±1%	±1%	±0.5%	Zero-crossing counters.
Rate of frequency change	1.5 Hz/s	1.5 Hz/s	0.3 Hz/s	Phase synchronization circuits.

Source: Based on FIPS Pub 94-1983.

Copyright © 1999 IEEE. All rights reserved.

Copyright by the Institute Of Electrical & Electronics Engineers Inc
Fri Jul 20 10:34:32 2001

4.5.1 Transient voltage disturbance sources/characteristics

In this subclause, *voltage waveform disturbances* are considered to be that set of voltage variances on the power circuits of interest that are

a) Nonsinusoidal at the nominal frequency of the power source; and

b) The result of power-source and load characteristics, which interact with the intervening impedances present in the associated ac building distribution system.

These disturbances in system voltage waveform tend to decay rapidly with time.

Load-related changes and switching events cause almost all voltage disturbances that occur between equipment and their power sources. Several common load-derived sources of voltage waveform disturbances and their relative characteristics are presented below.

4.5.1.1 Step loads

Step load changes are one of the most common sources of voltage disturbance. The basic cause of the voltage disturbance is simply a change in voltage drop caused by the sudden application or removal of load current and the power system impedance. Simply stated, when load current abruptly changes, the voltage drop in the path also abruptly changes. Properly applied ac voltage regulators tend to correct voltage drops within the power distribution system, but only after a time delay that is an inherent characteristic of the feedback system used in the regulator being utilized. All ac voltage regulators have a characteristic time-delay from the sensing of a voltage variation on their output to the time of correction on their output, and this is mainly dependent upon the type of regulator technology chosen in each case.

4.5.1.2 Inrush currents (motors, LC line filters, and power supplies)

Inrush currents are associated with the initial energizing of motors, low-pass type LC line filters (e.g., with shunt capacitors connected on the supply side of the filter), and various ac-dc power supplies (e.g., via the initial magnetizing current for an input transformer if one is used, the initial filter capacitor after the rectifier, or both) are typically found in electronic equipment.

AC motor starting (inrush) currents are about equal to the locked-rotor currents, which are typically 5 to 7 times their rated full-load current. These inrush currents can require around 0.3 to 3.0 s to decay to steady-state values, depending on motor acceleration time and motor load. DC motor-starting currents appear as rectifier loads on the ac power distribution system.

The initial energizing of transformers often create magnetizing current transients (e.g., "premag" currents). Inrush currents 10 to 20 times their normal full-load current can exist, decaying in several cycles under worst-case conditions. Actual inrush currents will depend on the phase angle of the initial voltage waveforms and the state of residual magnetic (core) flux from prior transformer energizing.

Copyright © 1999 IEEE. All rights reserved.

Copyright by the Institute Of Electrical & Electronics Engineers Inc
Fri Jul 20 10:34:33 2001

Unless the typical ac-dc power supply is equipped with a current-inrush limiting feature (e.g., "soft-start"), the initial capacitor charging current at power-on time can cause fairly high levels of current inrush, especially when the capacitor is fully discharged and the initially applied voltage is at its peak value. For example, typical ac-dc switch mode power supply (SMPS) units often have no input transformer, but instead connect a full-wave, bridge rectifier directly across the ac line, which then directly feeds a large filter capacitor bank that is used for bulk energy storage for the HF inverter stage that follows. This arrangement causes the capacitor bank to be charged as much as possible on the first half-cycle of the applied current, with the current only limited by upstream circuit impedances.

4.5.1.3 Fault currents

Fault currents represent an extreme case of transient current flow and thus ac line-voltage disturbance. Depending on the power system impedance, several orders of magnitude of normal full load current may be available. Severe voltage reductions to adjacent equipment usually result until the fault is cleared. Motors that are running during the fault may act as regeneration current sources and will dump additional current into the fault for up to several cycles in worst case conditions.

Some fault conditions do not result in high currents and may not cause overcurrent protective devices to operate (e.g., arcing ground faults, under certain conditions). These faults often create significant high-frequency transient voltages of large amplitude. Solidly grounded power sources tend to minimize this type of fault and rapidly clear them when they do occur.

Fault currents entering and flowing on externally attached EGCs of all types (e.g., supplementary grounding conductors) can pose a transient voltage problem to connected electronic load equipment that, in turn, is interconnected between units by low-voltage logic, data, or signaling cables. This occurs because the equipment grounding system often presents itself as a source of high transient voltage during ground faults due to the effects of $-e = L\ di/dt$ (neglecting the effects of any distributed capacitance). Transients developed across the inductance of the involved grounding conductors can then destroy interface electronics at the ends of the interconnecting cables, telecommunications cables, and on occasion, related ac-dc logic power supply components.

4.5.1.4 Voltage regulator interactions

Voltage regulators present themselves to the ac supply line as inverse loads, e.g., they increase input current as input voltage decreases. For example, on a typical 1Ø input ac-dc SMPS contained in an electronic load unit, an approximate 25% decrease in input line voltage generally results in a corresponding 25% increase in rms input line current at the lower input voltage. This rms increase of input current with decreased input voltage would also occur on an ac-ac line-voltage regulator that is interposed between a load and an upstream ac power source. This is independent of the primary to secondary winding ratio as long as percent is the means of measurement. The shift in power factor that also accompanies this process will affect the amount of rms current increase that will be seen for the corresponding voltage decrease, etc.

 Copyright © 1999 IEEE. All rights reserved.

Copyright by the Institute Of Electrical & Electronics Engineers Inc
Fri Jul 20 10:34:34 2001

Hence, a very low input ac line voltage to a singular voltage regulator may create conditions of excessive current and additional unwanted line-voltage drop on the upstream branch circuit (which worsens the situation even further). This may cause problems ranging from overcurrent protective device operation to conductor and connection overheating. Small, load-dedicated isolation transformers in the path may also experience overheating due to overload and increased harmonic current effects when this occurs.

When a single, large voltage regulator or groups of smaller ones are involved and their currents are combined at some point on the ac supply system, the increased current associated with a low line voltage can become quite large. This poses overcurrent problems at points such as panelboards, feeders, and upstream supply sources (e.g., transformers or alternators). Additionally, this increased current causes additional voltage drop, and therefore even poorer voltage regulation conditions, to occur on these paths.

Due to overloading on supply circuits, as described previously, any downstream circuits may experience even lower rms line voltage to nonregulated loads (e.g., motors). Additionally, all downstream loads will experience generally increased voltage sag problems. This latter condition occurs since the already low ac line means that the involved voltage regulators are now operating below nominal and closer to their input's low-voltage limit. Hence, a small sag that could otherwise be neglected, can cause a regulator to go out of its regulation band with unexpected effects to its served load(s).

Note that a low line voltage due to increased input current to a voltage regulator's action is compensated for by that regulator demanding a further increase in input current to again create a stabilized output. Thus, a positive feedback (e.g., circular) condition exists and, under certain conditions, can cause a system-wide overcurrent condition that leads to a power loss due to the operation of an upstream main overcurrent protection device. This is especially possible with very wide input range voltage regulators that are operated at very low input voltage (e.g., such as when an emergency or back-up ac power supply is in use and, due to loading effects, is producing a low output voltage). It is also an expected condition when a 3Ø voltage regulator is used and is of the type that can be operated under a 1Ø input line condition and still produce a nearly proper 3Ø output. Under this set of conditions, the $\sqrt{3}$ factor is no longer operative on the input current equation and the full 3Ø load output of the regulator is converted to 1Ø current on the remaining pair of phases.

Note also that a line voltage regulator being operated under conditions of excessively low input voltage may then produce a lower output voltage than nominal. Thus the SMPS loads attached to the regulator see a lower than nominal line voltage on their inputs and then demand increased current as a means of compensation. This effect then causes the line voltage regulator to have to supply even more output current with the usual effect that its output voltage is again reduced, and so on. The final effect occurs when the system no longer can stay in regulation or an overcurrent protective device is opened and the whole involved system shuts down.

Finally, if poorly applied, any voltage regulator may negatively interact in the ac distribution path. The result can range from a tendency to amplify ac line voltage disturbances to uncontrolled oscillations between an upstream (supply) and downstream (load) voltage regulator.

Copyright © 1999 IEEE. All rights reserved.

Copyright by the Institute Of Electrical & Electronics Engineers Inc
Fri Jul 20 10:34:35 2001

This typically occurs due to sympathetic regulation time-constant problems between the upstream voltage regulator and the regulator contained in the electronic load (see FIPS Pub 94-1983). For example, closely matched ferroresonant transformers (FRT) operated in series have been seen to act like magnetic "flip-flops." For example, this can occur when an item of electronic equipment has an internal FRT and in an attempt to solve some perceived power quality problem, someone plugs the equipment into an externally installed FRT.

4.5.2 Potential impacts of transient voltage disturbances

Disturbances of the ac voltage waveform and their attendant current harmonics have been shown to significantly impact both the ac distribution system and the electronic loads (see FIPS Pub 94-1983 and Key [B31]). The most significant of these are discussed in 4.5.2.1 through 4.5.2.7.

4.5.2.1 Complete loss of ac power to electronic loads

Excessive motor and transformer inrush currents can exceed the time-current trip curves of upstream overcurrent protective devices, causing an open circuit to electronic loads.

4.5.2.2 Short-term voltage variances

Temporary reductions in the ac distribution voltage can be caused by significant step changes in load current. This is particularly true for transformer and motor inrush currents, and large load systems that dynamically switch on/off their subsystems (FIPS Pub 94-1983). The time duration of these low ac voltages cause stored-energy problems in power ac-dc power supply filter circuits that can exceed their holdup (e.g. ridethrough) time. This acts as the equivalent of an extreme ac line-voltage sag or longer duration interruption.

For example, the inrush current time is minimized when the motor is connected to an ac supply of low impedance since the motor's current demands can be met by this kind of ac supply without a significant concurrent low-input voltage condition occurring. However, if an ac supply is used with significant impedance present within it, the resulting low line voltage due to inrush current demands will cause the motor to take longer to reach its operating RPM and thus its nominal current input. As a result of this, it can be fairly concluded that using a voltage regulator to serve both motors and other loads that are affected by short-term voltage variances is not a recommended practice without very careful engineering that correctly accounts for these dynamic effects.

4.5.2.3 Transient phase shift due to reactive load changes

This effect is primarily the result of dynamic switching (on/off) of inductive and capacitive load elements (e.g., ac motors and shunt capacitors). These large dynamic changes in load current, fed by reactive ac circuits, result in voltage and current time-shifts on the ac circuits.

Due to the connection or disconnection of large reactive loads, a phase-shift condition rapidly occurs between the circuit's voltage and current on the involved circuit until the new point of

Copyright © 1999 IEEE. All rights reserved.

Copyright by the Institute Of Electrical & Electronics Engineers Inc
Fri Jul 20 10:34:36 2001

equilibrium is reached. During this period of rapid power factor phase-shift transition any connected dynamic loads such as voltage regulators, ac-dc power supplies, and motors will act to readjust their output to compensate for whatever change in energy demand they require at that moment. This produces momentary electrical disturbances on the upstream ac supply circuits from these dynamic loads, which can be directly related to the "slew rate" (e.g., rate-of-change of time) between peaks or zero-crossings on the voltage, current, or both waveforms as they seek to readjust to the new cycle-by-cycle timing conditions imposed by the reactive load changes.

An additional problem can occur when a typical 3Ø dry-type transformer is under consideration and a variation in the time between zero-crossings of the ac voltage waveform can be seen to occur due to phase-shift phenomena related to load changes on the secondary circuit. In general the number of zero-crossings in a time period will still average out to 60 Hz, but a variation in time can be seen on individual and several related cycles during the period of interest. This can affect equipment that uses zero-crossings of the voltage waveform for timing or triggering considerations where an operating window exists every 8.33 ms that is too narrowly defined to allow a phase-shifted voltage waveform to be acceptable under all conditions.

4.5.2.4 SMPS input voltage selector

Certain SMPS designs have evolved for world-trade purposes where the ac line input to the SMPS may be either 120 V ac (typically North America) or 240 V ac (typically European), with the only difference being the type of input line cord assembly being used. This is generally accomplished by an electronic circuit in the SMPS that automatically connects its input according to the ac voltage that is sensed on the line terminals. A momentarily high ac line voltage can sometimes trigger this circuit into changing the connection from 120 V ac to 240 V ac while operating on a 120 V ac line. Unless the SMPS is equipped with a time-delay or other form of protective circuit to prevent this, the problem can occur. The end result of this unwanted switching action is a malfunction of the SMPS, which will affect its connected load. This is not a problem on SMPS designs that have the input voltage set by manual means.

4.5.2.5 DC bus voltage detectors

A wide range of equipment that is dc operated, but powered from a rectifier system that feeds a dc bus, contains monitoring circuitry to detect when the dc bus voltage goes out of tolerance. Upon such detection a protective shutdown of the dc load is generally effected. Typical equipment of this type is the variable-speed drive (VSD) in which a dc bus is used to power an inverter, which in turn powers an ac motor.

The usual problem with the foregoing arrangement occurs when a surge or oscillatory voltage is applied to the ac line input to the rectifier and which, after passing through the rectifier, then results in a corresponding momentary and oscillating increase-decrease in the dc bus voltage. A common cause of this is when power factor capacitors are switched on-line by the serving electrical power supplier, or when customer-owned capacitor banks are connected.

Copyright © 1999 IEEE. All rights reserved.

Copyright by the Institute Of Electrical & Electronics Engineers Inc
Fri Jul 20 10:34:38 2001

Some unnecessarily sensitive solid-state uninterruptible power supply (UPS) equipment may also be affected by this phenomena, but the usual result in these cases is not a shutdown of the UPS and its loads. Instead, a momentary no-break transfer to the synchronized bypass line occurs so that operation of the connected loads goes on in unaffected fashion. However, such unnecessary transfer switching is generally undesirable with a UPS and is therefore a potential problem.

4.5.2.6 Digital circuit data upset

Many of the aforementioned disturbances may occur with no other effect on the connected electronic load equipment except to create data transfer or storage errors in digital logic circuits. Since digital logic is also used within equipment for various control purposes, these disturbances may also be seen to unwantedly activate power quality checking circuits, and to trigger them into alarm or error status—often on an electronic system-wide basis. In addition to error and alarm reporting, such circuits may also be connected to cause the associated equipment to be placed into a self-restoring standby state (e.g., temporarily off-line as part of a power "fail-safe" operation) or to be placed into a full power-off state that can only be recovered from by manual, and often complex, operator intervention.

4.5.2.7 Frequency variations and slew rate

When an on-site generating system, such as an engine-alternator, is used as the ac power source for electronic load equipment and is closely matched in size to the load, almost any variations in loading (particularly step-loading) can cause related variations in rotational speed, which in turn produce a temporary change in the ac supply frequency until the engine-alternator's speed governor makes its correction. Increased loading lowers shaft RPM while decreased loading increases it. The amount of shaft speed change during loading changes is closely related to both the size/mass of the generating set in relation to the amount of the loading step change and to the type of speed-control governor employed on the generating equipment. Typically, a well-controlled correction occurs over several cycles when the recommended isochronous type of speed governor is used on the engine. Other forms of speed governors are generally not effective in minimizing this condition in comparison to the isochronous type.

Step-load changes cause the generating unit's shaft speed to change at a faster rate than will occur due to normal corrections controlled by the engine's speed governor. This is as the speed governor is normally set up to limit the maximum rate-of-change of shaft RPM that results from its feedback input. Hence, the output frequency's rate-of-change under governor control is limited as well. However, shaft RPM changes and related output frequency rate-of-change caused by step-loading variations are not controlled, except by the maximum rate-of-change in RPM that the equipment's rotating mechanical mass will allow. Therefore, unacceptably high rates-of-change in output frequency can be experienced due to step-loading changes. This is called a frequency "slew-rate" problem, and it can be a severe problem affecting the operation of some types of electronic load equipment.

 Copyright © 1999 IEEE. All rights reserved.

Copyright by the Institute Of Electrical & Electronics Engineers Inc
Fri Jul 20 10:34:39 2001

An example of the above is load equipment that establishes a clock timing or other synchronizing state based upon zero-crossings of the voltage waveform. This requirement is particularly susceptible to frequency slew-rate conditions. Typical limits on frequency slew rate are in the range of 1.5 Hz/s for most electronic loads, and 0.3 Hz/s for critical electronic loads (see FIPS Pub 94-1983).

Electronically controlled ac power sources that are derived from crystal-clock or phase-lock governed solid-state inverters, such as in modern solid-state UPS equipment, are virtually immune to loading-related frequency slew-rate problems. In addition, they are designed to limit the frequency slew rate of the inverter, as when it is phase-matching its output to the bypass source in order to permit its output to be transferred between the inverter and bypass source in closely synchronized, no-break fashion via a synchronous static-switch. However, incompatible frequency slew rates between an inverter and an engine-alternator set arrangement can cause synchronous static-switch transfer problems between the inverter's output and the bypass circuit provided by the engine-alternator set(s). For example, oscillation between the two sources via the synchronous static-switch is known to occur and the result is generally an inability to make a reliable, on-demand, at-any-time transfer from one ac power source to the other.

4.5.3 Steady-state voltage distortion sources/characteristics

4.5.3.1 Linear and nonlinear loads

Assuming an undistorted voltage waveform, a linear load is one that proportionally draws current at only the fundamental frequency across the entire period of the applied sinusoidal voltage waveform, as shown in Figure 4-16, where a resistance is shown. A reactance or impedance could be substituted for the resistance and the load would still be linear since the ohmic value of the load remains constant over the entire range of the applied voltage.

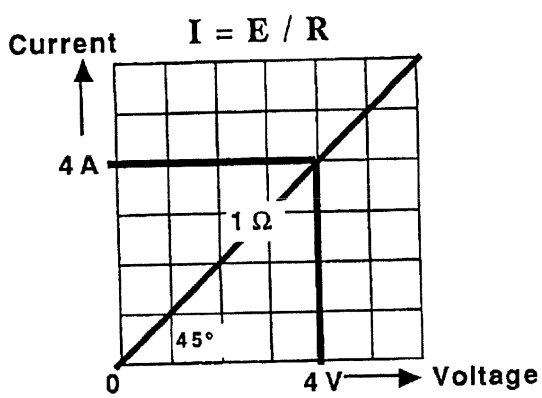

NOTE—Produces a proportional result for $I = E/R$ over the entire curve for a linear load.

Figure 4-16—Graph of voltage vs. current at a constant load impedance

Copyright © 1999 IEEE. All rights reserved.

Copyright by the Institute Of Electrical & Electronics Engineers Inc
Fri Jul 20 10:34:40 2001

When the foregoing linear load's current or voltage is translated across a 45° line of reflection, as shown in Figure 4-17, the resultant waveshape for the voltage or current is exactly the same as for the wave being used as the input model. No harmonic distortion of the wave occurs in this case using a linear load and sinusoidal voltage waveform.

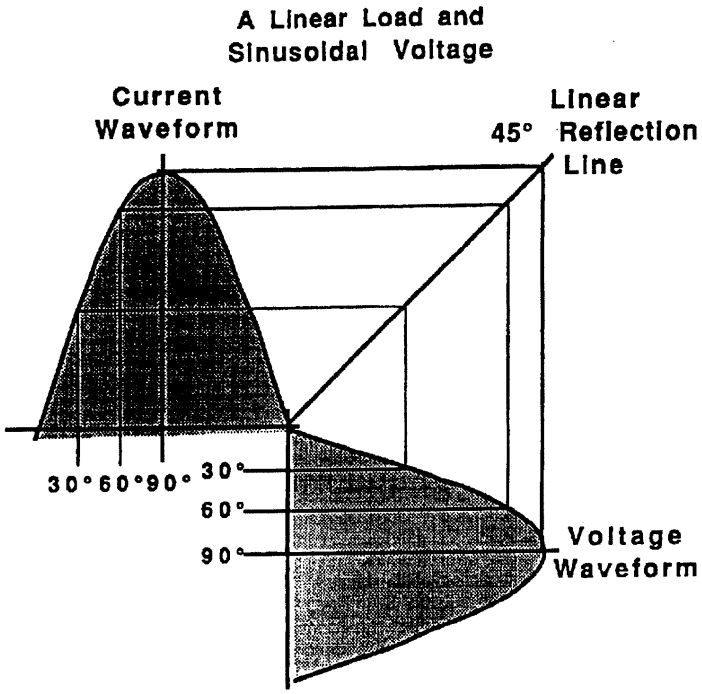

NOTE—Developed across a straight 45° (i.e., linear) load impedance reflection line to a sinusoidal voltage waveform source.

Figure 4-17—Sinusoidal current waveform shape resulting from a linear load

However, when the load does not proportionally draw current in relation to the applied voltage over the entire period of the sinusoidal voltage waveform, as does a rectifier or SCR controlled load for example, and as generally shown in Figure 4-18, it is termed nonlinear. In this case the ohmic value of the load does not remain constant over the entire range of the applied voltage waveform, but changes according to a uniquely characteristic curve that relates to the particular nonlinear load in each case.

The nonlinear load therefore draws current at different rates over the period of the applied sinusoidal voltage waveform, and it does so only at harmonically related frequencies to the power system's fundamental frequency. This results in a harmonically distorted current waveform for that current being drawn from the supply source by the nonlinear load. An example of this is shown in Figure 4-19 where a nonlinear load's characteristic impedance is plotted as a curved (e.g., nonlinear) reflection line across which the applied sinusoidal voltage and resultant harmonically distorted load current waveform's shape can be determined. This is

 Copyright © 1999 IEEE. All rights reserved.

Copyright by the Institute Of Electrical & Electronics Engineers Inc
Fri Jul 20 10:34:41 2001

contrasted to the equivalent diagram for a linear load as shown in Figure 4-17 where it can be seen that an applied sinusoidal voltage waveform results in a sinusoidal current waveform for the current flowing through the linear load.

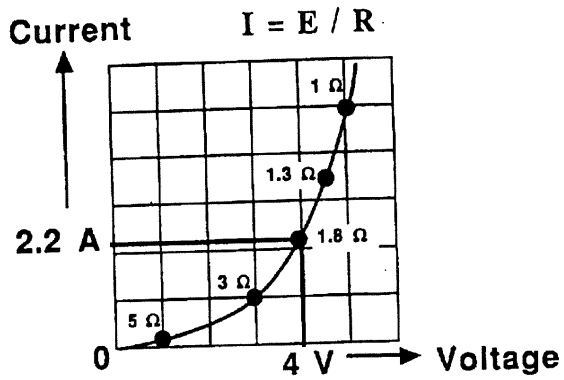

NOTE—Produces a nonproportional result for $I = E/R$ over the entire curve for a nonlinear load. *However,* $I = E/R$ is always valid on an instantaneous basis.

Figure 4-18—Graph of voltage vs. current at a variable load impedance

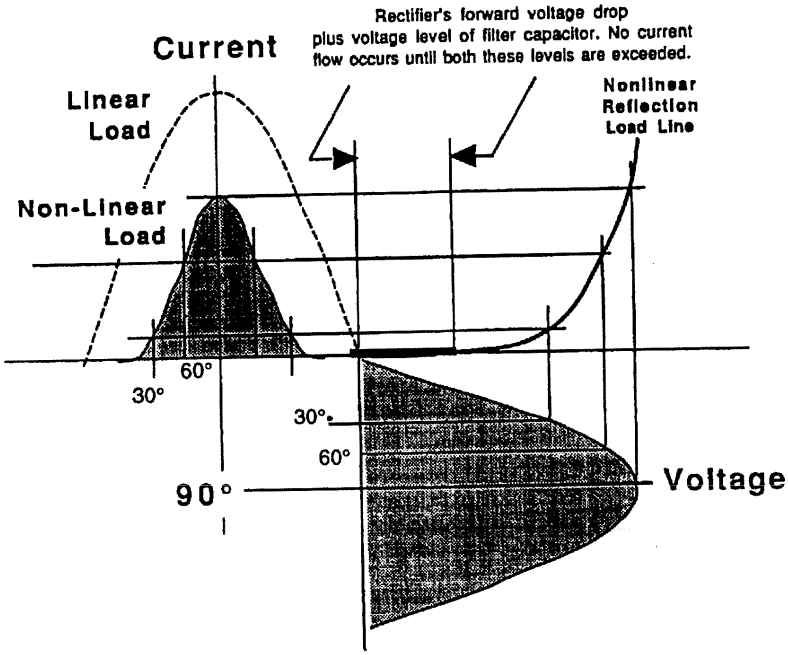

NOTE—Developed across a curved (i.e., nonlinear) load impedance reflection line to a sinusoidal voltage waveform source.

Figure 4-19—Resulting distorted current wafeform shape resulting from nonlinear load

Copyright © 1999 IEEE. All rights reserved.

Copyright by the Institute Of Electrical & Electronics Engineers Inc
Fri Jul 20 10:34:42 2001

If a harmonically distorted voltage waveform is applied to the linear load, it will result in an identical amount and type of harmonic distortion for the load current's waveform. However, this is not a function of the load's linearity (or lack of), it is a function of the waveshape of the applied voltage across a constant impedance load. But, if a nonlinear load is used with an already harmonically distorted voltage waveform, the resultant distorted current caused by the distorted voltage waveform will simply be algebraically added to the waveform from the current that is related to the load's intrinsic nonlinearity. Therefore, a new, composite current waveform with more (or possibly less) harmonic distortion will be the result.

The effect of nonlinear loading is equivalent to adding one or more current sources to the electrical system that produce characteristic harmonic current flow on and within the supply system wiring between the source (e.g., the nonlinear load) and the ac power supply itself (Figure 4-20).

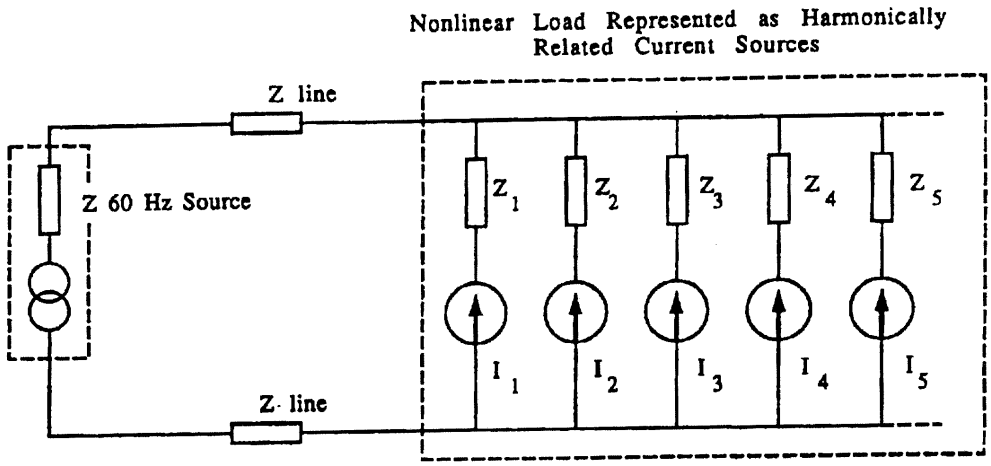

Each Current Source is Defined as Having
a Magnitude (A) and Phase Angle ($\varnothing$) As $I_n = A\underline{/\varnothing°}$

Figure 4-20—Nonlinear load modeled as a group of harmonically related current sources connected in parallel across the supply source of fundamental frequency

When harmonic currents from nonlinear loads flow through the internal impedance of the ac supply itself, a voltage drop (e.g., $E = IZ$) is produced across the supply's internal impedance for each harmonic current, in addition to that occurring from fundamental current. The amount of voltage drop in the internal impedance is proportional to the impedance presented by the internal reactance of the supply's windings at each harmonic frequency, and in relation to the amount of current flow at each frequency. Therefore, on a per-ampere basis, 1 A of 3rd harmonic will produce approximately three times the voltage drop that 1 A of fundamental current will, and so on. Also, since the reactance in the power source's windings presented to each harmonic current is different as a function of frequency, the produced IZ drops are normally not in phase with the fundamental voltage and current waveforms, and a phase shift

Copyright © 1999 IEEE. All rights reserved.

Copyright by the Institute Of Electrical & Electronics Engineers Inc
Fri Jul 20 10:34:43 2001

results that is unique to each harmonic. In other words, each harmonic will have its own displacement power factor, as will the fundamental.

The resulting voltage drop occurring within the ac power source from the harmonic currents flowing through it is algebraically added to the intended fundamental voltage being produced in the same winding. This produces a harmonically distorted voltage waveform from the power source, which is then applied to all connected loads—linear and nonlinear alike. Hence, the need for a low-impedance power source used in conjunction with nonlinear loads is somewhat self-evident if the propagation of nonlinear voltage waveforms on the entire downstream wiring system from the power source is to be minimized.

In addition to the harmonic currents producing voltage drops within the ac power source's internal impedance, the same effect occurs on the impedance of all the intervening wiring between the power source and the nonlinear load(s) connected to it. Hence, with the nonlinear load viewed as a harmonic current source, the amount of harmonic voltage distortion produced by it on the wiring system will be seen to increase as connections are made closer to the nonlinear load, and to diminish as the connection moves upstream to the ac power source (see Figure 4-21). The ac power source will then be the point on the wiring system at which minimum harmonic voltage distortion will be seen to exist.

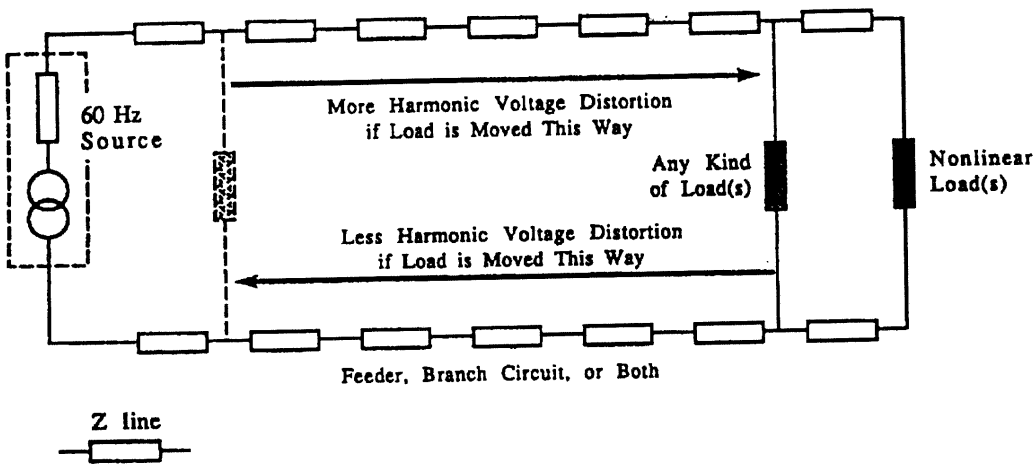

NOTE—The load experiences the least amount of voltage waveform distortion when connected close to the source of power and the most distortion when connected near the nonlinear load(s).

Figure 4-21—Load connected across a power system serving nonlinear loads

The harmonic currents discussed previously are also known to interact with any reactances that exist on the power system, and so excite power system resonances, which produce excessive voltages and currents on the system and which then stress various power system components connected on the same ac distribution system. In particular, power factor correction capacitor banks are of the most concern in these cases and they may be both the culprit and victim at the same time. Harmonic disturbances and proposed limits on them are discussed in detail in IEEE Std 519-1992 [B28].

Copyright © 1999 IEEE. All rights reserved.

Copyright by the Institute Of Electrical & Electronics Engineers Inc
Fri Jul 20 10:34:45 2001

Most electronic loads exhibit nonlinear characteristics. AC/DC power supplies using simple across-the-line, full-wave diode-input rectifiers and large dc filter capacitors are common examples of this type of load (e.g., the SMPS). More sophisticated ac/dc power supplies now exist with improved input power factor and greatly reduced harmonic current demands. The ac/dc power supplies are becoming available primarily as a result of industry interest and the harmonic current limits suggested by IEC 60555-1: 1982 [B23], IEC 60555-2: 1982 [B24], and IEC 60555-3: 1982 [B25], but the cost per watt is more than for unimproved types. This latter fact is slowing the introduction of these newer designs into the market, and there is still a very large number of the older types of supplies still in use and which will be in use for the foreseeable future—especially where initial cost is of most importance to the purchaser.

Exact analysis of ac/dc power supply input current vs. applied voltage is complex, but it can be said that a load current flows nonlinearly during the ac cycle (see NFPA 75-1999 and Arrillaga et al. [B3]). For example, there is no appreciable input current flow until the rectifier begins to conduct current at the point where the applied input voltage exceeds the existing voltage in the filter capacitor plus the forward voltage drop of the rectifier(s). Hence, charging current flows in pulse fashion with the peak current being drawn at approximately the 90° and 270° points on the applied voltage waveform, as shown in Figure 4-22. The duration of current flow (each half-cycle on each phase) can be described in terms of the conduction angle for switch-mode power supplies and is 30–60°. Typical current crest factors range from 2 to 3 (vs. 1.4 for a linear load fed by sinusoidal ac power).

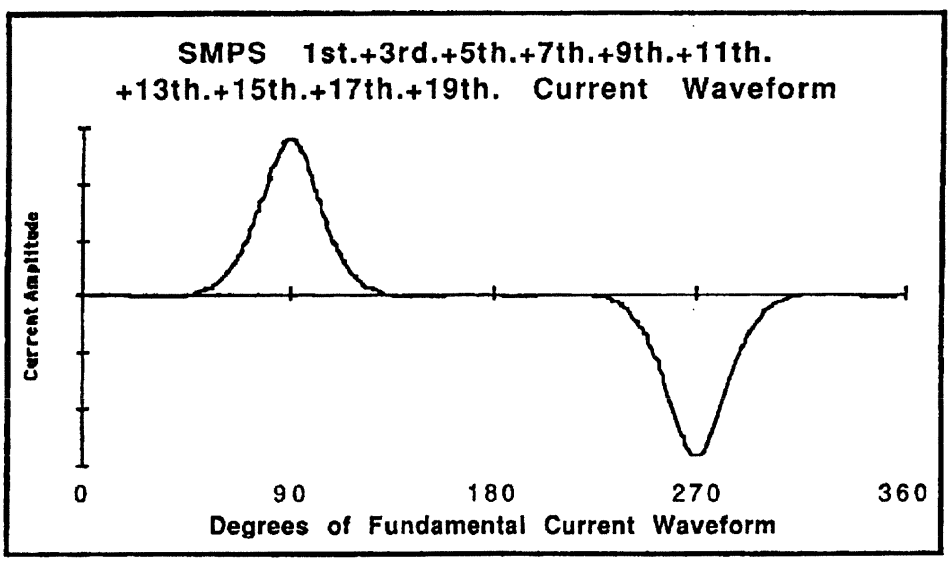

Figure 4-22—Nonsinusoidal ac input current to a typical SMPS with peaks occurring at 90° and 270°

Copyright © 1999 IEEE. All rights reserved.

Copyright by the Institute Of Electrical & Electronics Engineers Inc
Fri Jul 20 10:34:46 2001

Figure 4-23 illustrates the harmonic content for the ac input to a typical SMPS along with amplitude and phase-angle for each of the currents, which algebraically add together to produce the resultant current waveform shown in Figure 4-22.

Table 4-4 shows an example of the harmonic current content of a balanced line-to-line and line-to-neutral rectifier diode-capacitor power supply in a three-phase power system. In three-phase circuits, the triplen harmonic neutral currents (e.g., odd-order multiples of three such as the 3rd, 9th, and 15th) add together on the neutral instead of cancelling, so unexpectedly high neutral currents may exist where line-to-neutral connected nonlinear loads are in use on a four-wire, wye-connected supply system (see 4.5.4.2 and Gruzs [B20]).

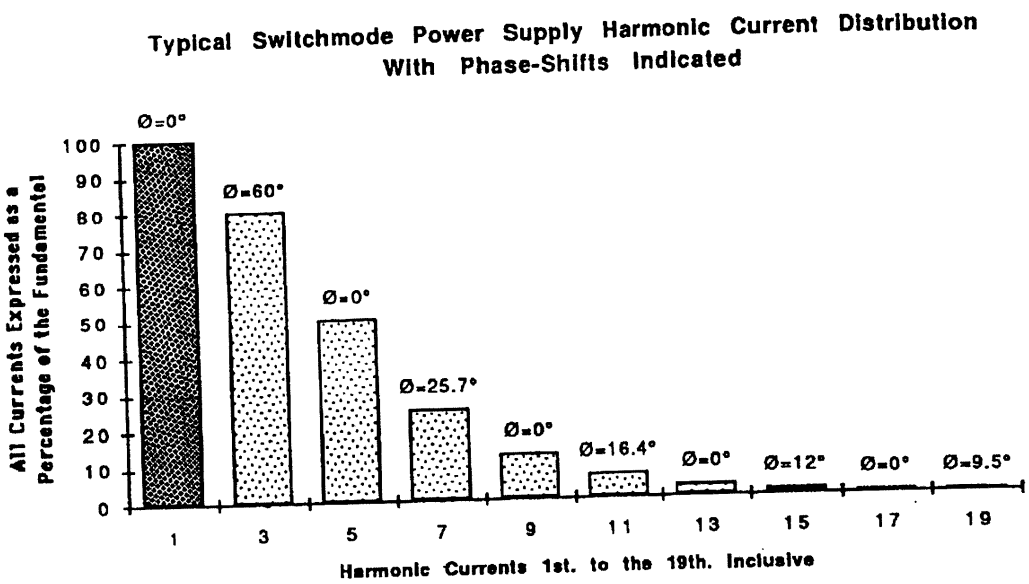

Figure 4-23—Frequency domain display of input current to typical SMPS, both amplitude shown at each harmonic and phase angle

4.5.3.2 Power factor, linear and nonlinear loads

Reactive loads that are linear or mostly so, such as ac motors, low-pass LC power filters, and other reactive components within loads, normally cause nonunity total power factor to occur per Equation (4-8). When nonlinear loads are being considered, the following equation is only valid when true-RMS instrumentation is used to make the necessary measurements, as frequencies other than the fundamental are present in both the voltage and current waveforms at the same time:

Copyright © 1999 IEEE. All rights reserved.

Copyright by the Institute Of Electrical & Electronics Engineers Inc
Fri Jul 20 10:34:47 2001

$$PF_t = \cos\theta = \frac{P}{P_s} = \frac{\text{Active power}_{\text{kW}}}{\text{Apparent power}_{\text{kVA}}} \tag{4-8}$$

where

PF_t is the total power factor where unity PF occurs when $PF_t = 1.0$,

θ is the phase angle between current and voltage,

P is the active power in (kilo)watts,

P_s is the apparent power in (kilo)volt-amperes.

Table 4-4—Example input harmonic current distortion in balanced three-phase circuits due to rectifier-capacitor power supply

Harmonic number	Line-to-line harmonic current[a]	Line-to-neutral harmonic current[a]
1	0.82	0.65
3	—	0.52
5	0.49	0.42
7	0.29	0.29
9	—	0.13
11	0.074	0.12
13	0.033	0.098
Total phase current	1.00	1.00
Neutral current	0.0	1.61

[a]Normalized to phase current

4.5.4 Potential impacts of steady-state current distortions

4.5.4.1 Transformer heating due to harmonic currents

Transformers serving linear loads have no unusual heat losses related to their operation at the power system's fundamental frequency. There are the typically expected power losses due to I^2R in all of the current paths, and hysteresis plus eddy-current losses within the windings, the core, and any metallic items that stray flux can engage. However, the same linear-load-rated transformer serving nonlinear (typically electronic) loads will generally exhibit

 Copyright © 1999 IEEE. All rights reserved.

Copyright by the Institute Of Electrical & Electronics Engineers Inc
Fri Jul 20 10:34:48 2001

exponentially increased internal heat dissipation conditions—sometimes to the point of rapid transformer destruction.

When harmonic current flows through the transformer's windings it generates magnetic flux at each of the harmonic frequencies (h), with the flux's intensity being in proportion to the current at each frequency. Up to about the 15th harmonic, this flux produces exponential eddy-current heat losses per h^2 wherever it can engage a metallic item with significant cross-sectional area. At the highest harmonic frequencies the relationship is no longer exponential, but is inverse, and defined by $1/h$. Between the two limits it is fairly linear and about equal to h.

Additional increased heat loss due to hysteresis in any ferrous metallic item being engaged by flux is fairly linear, and is simply related to the harmonic's order h. A linear increase in hysteresis heat loss occurs with rising harmonic frequency when the flux engages ferrous metals (such as in the core).

The foregoing heat losses in the transformer are in addition to those losses already expected from the action of the current flows at the fundamental frequency. IR_{ac} losses due to skin effect also play a role at higher frequencies and with large diameter conductors, but the losses associated with skin effects are generally not considered to be very significant in most power transformer applications and over the most common ranges of harmonics.

The vast majority of the added heat loss in the transformer being operated under harmonic current conditions is from winding eddy-current loss. The calculated amount of added heat loss is theoretically exponential, and is determined on the basis of the harmonic order and the amount of current on a per-ampere basis. For example, if 1 A of fundamental current produces X amount of eddy-current heat loss in a winding, then 1 A of 3rd harmonic current can be calculated to produce 3^2X or $9X$ the heat per ampere than is produced at the fundamental frequency. As can be seen from this theoretical example, this is an exponential relationship and it clearly indicates that it takes much less current at higher harmonic orders to produce extreme amounts of heat loss in a transformer than it does at lower orders. In practice, the amount of heat loss that occurs from successively higher orders of harmonics is apparently somewhat less than the calculated losses would indicate, but they are still very, very great. Only actual measurement of the heat loss on a given transformer can determine what the true losses are under all conditions of harmonic currents.

An applied primary voltage containing harmonics can also cause additional losses in the transformer, but in most practical cases the harmonic current-related winding losses related to the application of nonlinear loading are the major limiting factor for transformer capacity.

4.5.4.1.1 Derating conventional (no K-factor rating) transformers

Typical NRTL-listed transformers that are not K-factor rated (by the NRTL) to be used with nonlinear loads, are generally restricted to use on circuits with the following characteristics, which are specified by IEEE Std C57-12.00-1993 (for liquid-immersed) and IEEE Std C57.12.01-1998 (for dry-type) transformers:

Copyright © 1999 IEEE. All rights reserved.

Copyright by the Institute Of Electrical & Electronics Engineers Inc
Fri Jul 20 10:34:49 2001

a) Approximately sinusoidal, balanced input voltage; and

b) Load current that does not exceed 5.0% of total harmonic distortion.

These limitations are primarily due to eddy currents induced into the windings that increase losses and can cause overheating, as discussed in 4.5.4.1.

If acceptable to the electrical safety inspection authority having jurisdiction at the location, a conventional NRTL-listed power transformer can be derated so that it may serve nonlinear loads. The clear need to obtain permission for the derating is necessary since typical power and general-purpose dry-type transformers listed under UL 1561-1999 [B56][3] are not evaluated by the NRTL conducting the tests per the following:

> "Transformers covered under this category have only been evaluated for use on sinusoidal supply circuits. They have not been investigated for use where a significant nonsinusoidal content is present such as that which may occur with uninterruptible power supplies (sic), data processing equipment and solid state motor speed controllers." (See UL Electrical Construction Materials Directory [B58]).

Subsequent to obtaining permission from the electrical safety inspection authority having jurisdiction at the location, the recommended practice for derating conventional transformers in applications where nonsinusoidal load currents are present is provided in IEEE Std C57.110-1998 [B29]. The standard applies the results of studies that found winding eddy-current loss, P_{ec}, to be approximately proportional to the square of the rms load current at that harmonic, I_h, and the square of the harmonic number, h (see Crepaz [B9]).

If the eddy-current loss under rated conditions for a transformer, ($P_{ec\text{-}r}$), is known, the eddy-current loss due to any defined nonsinusoidal load current (P_{ec}) and up to about the 15th harmonic can be expressed as follows (see IEEE Std C57.110-1998 [B29]):

$$P_{ec} = P_{ec\text{-}r}\left(\sum_{h=1}^{h=h_{max}} I_h^2 \cdot h^2\right) \tag{4-9}$$

where

P_{ec} is the power loss due to winding eddy-current losses,

$P_{ec\text{-}r}$ is the power loss due to winding eddy-current losses under rated conditions,

I_h is the RMS current at harmonic h,

h is the harmonic order.

This relationship has been found to be more accurate for lower harmonics (≤15th), and an increasing overestimation of losses for higher harmonics occurs thereafter. The overestimation factor is less on smaller transformers, but can be significant for large diameter windings and large transformers (see Emanuel and Wang [B12] and Hwang et al. [B21]).

[3]Covers air-cooled, dry-type transformers of 600 V ac and 500 kVA for 1Ø units and 1500 kVA for 3Ø units.

Copyright © 1999 IEEE. All rights reserved.

Copyright by the Institute Of Electrical & Electronics Engineers Inc
Fri Jul 20 10:34:50 2001

4.5.4.1.2 K-factor rated transformers

The NRTL, UL, and transformer manufacturers have established a recognized rating method called K-factor, for dry-type power transformers, to indicate their suitability for nonsinusoidal load currents. This K-factor relates transformer capability to serve varying degrees of nonlinear load without exceeding the rated temperature rise limits.

The calculation of K-factor is based upon predicted losses as specified in the simplified method of IEEE Std C57.110-1998 [B29]. The limiting factor related to the overheating is again assumed to be eddy-current losses in the windings. So that K-factor may be universally applied to all sizes of transformers, the K-factor is defined on a per unit basis in either of the two ways that follow (see UL 1561-1999 [B56] and UL 1562-1999 [B57]), although Equation (4-11) is more generally used than Equation (4-10).

$$K = \sum_{h=1}^{h_{max}} (I_{h(pu)}^2 \cdot h^2) \tag{4-10}$$

where

$I_{h(pu)}$ is the TMS current at harmonic h, in per unit of transformer's rms rated load current,

h is the harmonic order.

The K-factor used in Equation (4-10) is the same as the one seen in Equation (4-11). For rating purposes UL has specified that the rms current of any single harmonic greater than the tenth harmonic be considered as no greater than $1/h$ of the fundamental rms current. This limitation is an attempt to compensate, in a practical manner, for otherwise overly conservative results at higher harmonic frequencies.

$$K = \frac{\sum_{h=1}^{h_{max}} (f_h^2 \cdot h^2)}{\sum_{h=1}^{h_{max}} (f_h^2)} \tag{4-11}$$

where f_h is the frequency, in hertz, of harmonic h.

The current in Equation (4-11) is expressed on a per-unit basis such that the sum of the individual currents times the harmonic number squared is 1 (this is handy for checking the results of the calculation). Thus for a linear load current, the K-factor is always one (unity).

For any given nonlinear load, if the harmonic current components are known, the K-factor can be calculated (or better yet, measured) and compared to the transformer's nameplate K-factor. As long as the load K-factor does not exceed the transformer K-factor, the transformer is being operated in accordance with this part of its NRTL listing requirements and the related NEC requirements.

Copyright © 1999 IEEE. All rights reserved.

Copyright by the Institute Of Electrical & Electronics Engineers Inc
Fri Jul 20 10:34:51 2001

An example of a nonlinear load's K-factor is shown in Table 4-5. UL lists the K-factor nameplate rating for dry-type transformers under UL 1561-1999 [B56] and UL 1562-1999 [B57]. Standard K-factor ratings are 4, 9, 13, and 20, with special ratings of 30, 40, and 50 that are available from some vendors. The K-9 rating is usually skipped over in favor of the K-13 rating since it is typically harder to find on the market.

Table 4-5—Example calculation of a nonlinear load's K-factor

Harmonic number h	Nonlinear load current I_h (%)	I_h^2	i_h [a]	i_h^2	$i_h^2 \cdot h^2$
1	100	1.000	0.909	0.826	0.826
3	33	0.111	0.303	0.092	0.826
5	20	0.040	0.182	0.033	0.826
7	14	0.020	0.130	0.017	0.826
9	11	0.012	0.101	0.010	0.826
11	9	0.008	0.083	0.007	0.826
13	8	0.006	0.070	0.005	0.826
15	7	0.004	0.061	0.004	0.826
17	6	0.003	0.053	0.003	0.826
19	5	0.003	0.048	0.002	0.826
21	5	0.002	0.043	0.002	0.826
Total		1.211		1.000	9.083
				K-factor =	9.083

[a] $i_h = I_h/(\sum I_h^2)^{1/2}$

Testing with a nonlinear load of appropriate K-factor is the preferred method for transformer K-factor rating testing. However, due to practical limitations, the most common method used by the NRTLs at present employs an overload of fundamental load current to simulate harmonic loading. This test method is described in UL 1561-1999 [B56] and UL 1562-1999 [B57] and requires an adjustment to compensate for harmonic losses. The test is based upon heat dissipation of the transformer without overheating any of its components or connections.

Copyright © 1999 IEEE. All rights reserved.

Copyright by the Institute Of Electrical & Electronics Engineers Inc
Fri Jul 20 10:34:52 2001

Transformers that are NRTL K-factor rated also possess certain mandated electromechanical construction characteristics not normally found in transformers without K-factor rating. These characteristics are an important part of the safety factor provided by the properly listed K-factor rated transformer. The most important of these requirements is that the neutral current path (buses, terminals, etc.) within the 3Ø, wye-connected secondary transformer be designed to safely carry a continuous rms current of 2 times the maximum rated rms line current (e.g., this path is 200% rated for ampacity). This is done to ensure that a safe current-carrying capability exists in this path that is subject to excessively high rms currents resulting from triplen harmonics associated with line-neutral connected nonlinear loads (see 4.5.4.2). This important safety feature is typically not found in standard transformers that are not K-factor rated and that may be operating with harmonic loads under a derating condition, as discussed previously.

4.5.4.2 Triplen harmonic-load-generated overcurrent in neutral path wiring

Excessive current in the neutral path occurs as the triplen currents (e.g., odd-ordered multiples of 3 times the fundamental power frequency) are additive on the neutral path since they are both in-phase and spaced apart by 120 electrical degrees. Therefore, under worst-case conditions, the true-rms neutral current can approach 1.73 times (e.g., $\sqrt{3}$ times) the phase current (see Gruzs [B20]), but its signature will also be predominantly (but not exclusively) at 3 times the fundamental frequency, or 180 Hz. This kind of true-rms current can dangerously overload the neutral conductor path itself, buses, or the end terminations/connections, unless they are suitably rated for the increased ampacity. A 200% rated neutral path, buses, and termination/connection system is generally recommended practice.

As discussed in 4.5.3.1, in three-phase, four-wire circuits where nonlinear loads are connected line-neutral, harmonic currents associated with the triplen (odd multiples of 3) will algebraically add together in the neutral conductor. In the most common cases this produces a neutral current containing mostly 3rd harmonic current (e.g., 180 Hz). In theory, this rms current can approach 1.73 times the line current on the transformer's secondary. So, it is necessary to ensure that the entire neutral current path is NEC rated to safely handle the current that this kind of operation requires.

Because current at frequencies other than 60 Hz are also rms currents that possess heating capability due to I^2R effects in the path, they are known to have caused electrical fires on wiring systems and in equipment where this was not taken into consideration, with suitable ampacity being provided in the path. This is a particular problem in that neutral conductors are not subject to the normal overcurrent protection in ac distribution systems (see NFPA 75-1999 and IEEE Power Systems Harmonics Working Group Report [B26]).

The most common effect observed to date however, appears to be the burning-open of the neutral path at a point of connection or splice (e.g., at a transformer's or panelboard's neutral bus-lug-wire point), with the result that the line-neutral connected nonlinear (and any other) loads are left connected to a floating neutral. This condition easily results in current unbalance conditions with the result that victim loads are forced to carry excess line current as dictated by the demands of the loads connected across the other two phases and neutral. They also experience excessive voltage being applied to their input power termi-

Copyright © 1999 IEEE. All rights reserved.

Copyright by the Institute Of Electrical & Electronics Engineers Inc
Fri Jul 20 10:34:53 2001

nals during these kinds of events. Therefore, damage to the involved loads is almost certain and can be very costly if they are associated with electronic equipment and systems.

4.5.4.3 Resonance due to harmonic load currents

The presence of capacitors, such as those used for power factor correction, can result in parallel resonance, which causes excessive currents as well as excessive ac line voltage distortion (FIPS Pub 94-1983).

4.5.4.4 Heat losses due to nonsinusoidal voltage source

Depending on the impedance of the power source, nonlinear loads will cause nonsinusoidal voltage waveforms. Voltage supplied to other equipment (e.g., ac motors and transformers) with these distorted waveforms can result in additional heat dissipation (see NFPA 75-1999).

Harmonic currents flowing because of source voltage distortions typically cause significant heating in ac motors, transformers, and generally in any magnetically based electrical device employing ferrous metal in the flux path. With increasing current frequency stator windings, rotor circuits, and stator and rotor laminations tend to dissipate additional heat due primarily to eddy currents (exponential loss), hysteresis (linear loss), and to a lesser degree, skin effect (linear loss). Leakage (e.g., stray) fields set up by harmonic currents in stator and rotor end-windings also produce extra heat losses in any surrounding or nearby metal (see Arrillaga et al. [B3]).

4.5.4.5 Phase shift (power factor) effects

The total power factor is the combination of the displacement and distortion power factors. Unless special power-factor corrected designs are used, the total power factors of electronic loads rarely approach unity (see NFPA 75-1999 and Arrillaga et al. [B3]). Therefore, these loads should always engender concern for the effects that their harmonic currents will create on the involved ac power source and the intervening wiring system.

Distortion power factor accounts for the flow of reactive (harmonic) power where the load current and ac line voltage are neither sinusoidal nor of the same frequency. Nonlinear loads act as generators of these (harmonic) currents, which are imposed on the power source and on the intervening wiring and other power transport components in the path, all acting as a load for them.

4.5.4.6 Subcycle voltage waveform variances

Nonlinear loads exhibiting large crest factors due to high peak-current demands tend to cause voltage flat-topping of ac distribution voltage waveforms. This is typically due to the high voltage drop in the ac power source's internal impedance that these peak currents create at, or near, the 90° and 270° points on the voltage waveform. These large crest factors can preclude certain types of load ac-dc power supplies from obtaining needed output filter capacitor recharging current on successive half-cycles from the building ac power distribution system.

Copyright © 1999 IEEE. All rights reserved.

Copyright by the Institute Of Electrical & Electronics Engineers Inc
Fri Jul 20 10:34:55 2001

While some voltage waveform flat-topping can be tolerated by well-designed (e.g., equipped with a large bulk energy-storage filter capacitance) and properly loaded ac-dc power supplies, excessive flat-topping can cause the equivalent of an ac power sag (see FIPS Pub 94-1983). Depending upon the design and loading of the ac-dc power supply and the degree of flat-topping being experienced, the equivalent sag condition may be of short or of a long duration lasting many cycles.

SCR-controlled equipment (e.g., rectifier power supplies, motor controls, and inverters) can cause repetitive ac distribution voltage disturbances called *notching* and multiple zero crossings of the voltage waveform that are generally related to momentarily high commutation currents. These disturbances in turn can upset electronic loads that are connected into these circuits for their input power and timing activities. They also can create near-field coupled interference into nearby susceptible cables and connected circuits, and can increase the noise in the grounding system.

4.6 Voltage surges

Voltage surges typically appear as decaying, oscillatory, subcycle voltage transients of any initial polarity. They are often of a singular or "burst" nature as opposed to being consistently repetitive on successive half-cycles of the ac voltage waveform. If the amplitude of these surges exceeds the nominal peak line voltage, they are a particular concern for many types of electronic equipment.

Even though most electronic equipment should not be affected if the surge voltage amplitude is less than the peak voltage of the ac power system's nominal voltage waveform, very small voltage surges that have gained access to the ac power input terminals of electronic equipment have been documented to cause disruption of data flow and integrity (see FIPS Pub 94-1983).

Higher voltage amplitude and higher energy surges applied to the ac input power terminals are often responsible for the destruction of components within the equipment (see Gallace and Pujol [B14] and Van Keuren [B59]). At some point, the amplitude and related energy content of the surge is certain to cause damage and destruction, such as when the characteristics of the surge closely approach or exceed those of the test waveforms used in the lightning simulation tests described in IEEE Std C62.41-1991. Any electronic equipment not certified to have been successfully tested to the requirements of this IEEE standard is of unknown surge immunity.

4.6.1 Sources/characteristics

There exists a large number of potential sources of electrical surges that can cause harm to electronic equipment and systems. The majority of these sources can be divided into two major categories—electrical power circuit switching and environmental causations.

Copyright © 1999 IEEE. All rights reserved.

Copyright by the Institute Of Electrical & Electronics Engineers Inc
Fri Jul 20 10:34:56 2001

4.6.1.1 Switching surges

Switching surges are associated with rapid changes in current flow rates (*di/dt*) within a given electrical system and the propagation of an associated voltage wavefront through the involved system. These surges are generally of the decaying oscillatory type, and they damp-out somewhat rapidly due to the inherent losses in the electrical distribution system. High-frequency components in the switching surge are more prevalent near to the point of production for the surge and, due to circuit losses, become progressively attenuated as propagation distance increases. Accordingly, the lower frequency components of the switching surge will propagate over longer distances from the point of origination than will high-frequency ones. However, the decay rates of the surge voltage being propagated are generally slower than their rise rates, and are long relative to power system time constants.

Switching surges can take several forms, depending on system configuration and rate of change in operating conditions. For example, one can also visualize switching surges as involving the very rapid expansion or reduction of magnetic (H) and electric (E) fields into the nearby space surrounding the conductors used to transport the related switching current and voltage waveforms. These near-field phenomena are then capable of being coupled into any nearby victim conductors or equipment, where the effects may range from negligible to seriously affecting the operation of the victim equipment. It is not necessary for the switching surge to actually be conductively applied to the input power (or signal-data) terminals of victim equipment for disruption of its operation to occur if near-field coupling is used as a means of surge propagation from the aggressor conductors into victim conductors.

Typical causes of switching surges include the following:

— Energizing or de-energizing the lumped and distributed reactive elements in premises power source wiring systems, and connected load equipment;

— Arcing associated with contactor, relay or switch contacts, loose connections, and ground faults; and

— Unsynchronized and non-current-limited, power-factor capacitor switching.

Figure 4-24 depicts a generalized power network with self-inductances, L_L, mutual inductances, L_M, resistances, R, and capacitances, C. Changes in currents with time for all the closed circuits (loops) described by Figure 4-12 and Figure 4-13 can be generally described by Kirchhoff's laws. Assuming L_L, L_M, R, and C are constant, the total current flows can be divided into steady-state and transient components. The transient-current components are of interest.

Copyright © 1999 IEEE. All rights reserved.

Copyright by the Institute Of Electrical & Electronics Engineers Inc
Fri Jul 20 10:34:57 2001

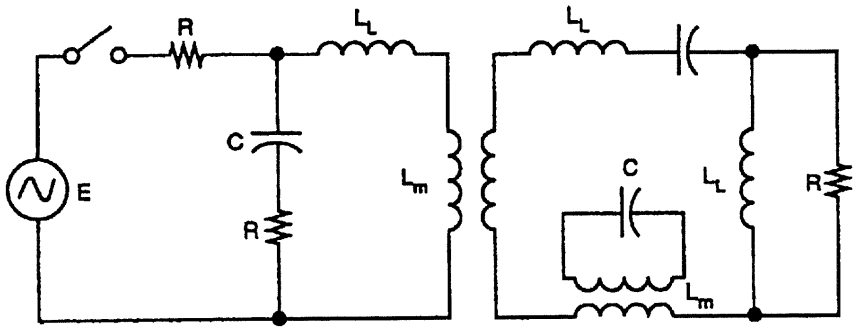

Figure 4-24—Generalized power network (equivalent for circuit analysis)

These transient currents produce transient magnetic fluxes and electric charge levels within individual components in the circuit. The following results can be shown in ac circuits with resistance, inductance, and capacitance (see Rudenberg [B46]):

— There is no discontinuity in voltage or current at the time of switching;

— A decaying alternating current and voltage develops with time;

— The magnitude of the voltage disturbance (switching surge) is determined primarily by the initial voltage and circuit capacitance; and

— The effects of $-e = L\, di/dt$ in the circuit's inductances are mitigated by the circuit's capacitances per Equation (4-12).

$$V_{c(\text{peak})} = I_0\sqrt{\frac{L}{C}} \tag{4-12}$$

where

$V_{c(\text{peak})}$ is the peak voltage developed across the circuit,

I_0 is the maximum rate of change of current in the inductance,

L is the inductance in henries (lumped or distributed),

C is the capacitance in farads (parasitic to the inductor).

Applying these concepts to the case of a typical distribution wiring system with a distant short circuit and interrupted by an overcurrent protection device somewhere in the line (depicted in Figure 4-25), we can further state (see Rudenberg [B46]):

Copyright © 1999 IEEE. All rights reserved.

Copyright by the Institute Of Electrical & Electronics Engineers Inc
Fri Jul 20 10:34:58 2001

— The amplitudes of the transient oscillations are determined by the switching current in the inductance and the switching voltage across the capacitance.

— The switching current and voltage change sinusoidally and in general have a phase difference.

— Switching surges can attain a theoretical maximum of twice their source voltage.

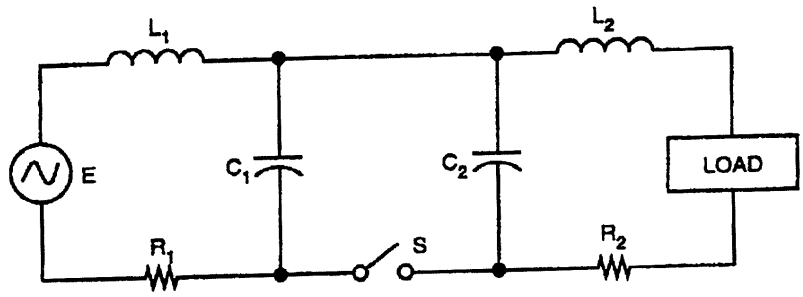

Figure 4-25—Typical ac building distribution wiring system (equivalent for circuit analysis)

Figure 4-26 and Figure 4-27 indicate the general behavior of a switching surge voltage and current respectively, with a stable arc drawn between the contacts. Note that before interruption of the switching surge (e.g., via a fuse, circuit breaker, or switch) the voltage across the closed contacts is zero, but the current flow through them is not. The surge voltage increases very rapidly after the initial separation of contacts occurs, rises to its permitted maximum, and then is followed by damped oscillation at the circuit's resonant frequency (Figure 4-26). Finally, full circuit voltage appears across the open contacts until the power source is disconnected or the contacts are reclosed. Current decreases in oscillatory fashion as the contacts open and finally drops to zero (Figure 4-27) where it remains until the contacts are reclosed on an energized power system with a connected load.

If the switching arc is unstable (inductive-capacitive circuit) as the contacts open, then the current is often interrupted and reignited several times before the dielectric strength of the increasing contact gap distance overcomes the voltage difference across the gap, thus creating a stable open-circuit condition. Figure 4-27 depicts the surge voltages associated with this multiple interruption-reignition across the switch contacts. It should be noted that the multiple interruption-reignition yields a series of electrical fast transients (EFTs), having a relatively long first-transition time ending with an abrupt collapse.

Copyright © 1999 IEEE. All rights reserved.

Copyright by the Institute Of Electrical & Electronics Engineers Inc
Fri Jul 20 10:34:59 2001

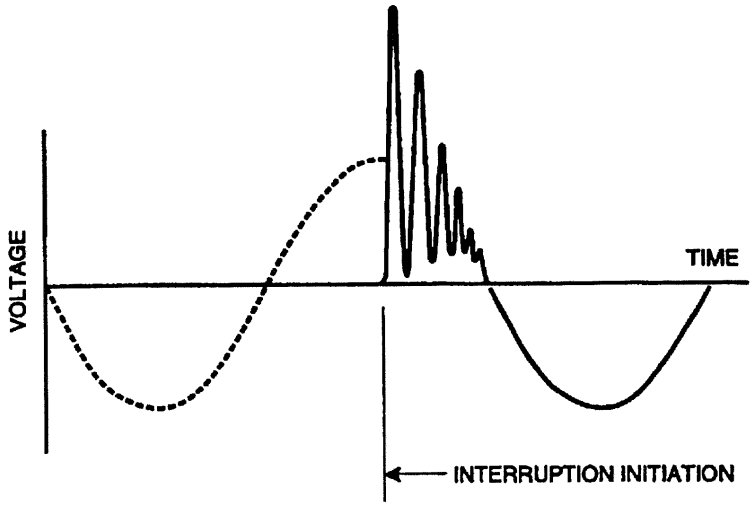

Figure 4-26—Typical behavior of (power-off) switching transient (recovery) voltage without multiple interruption recognition

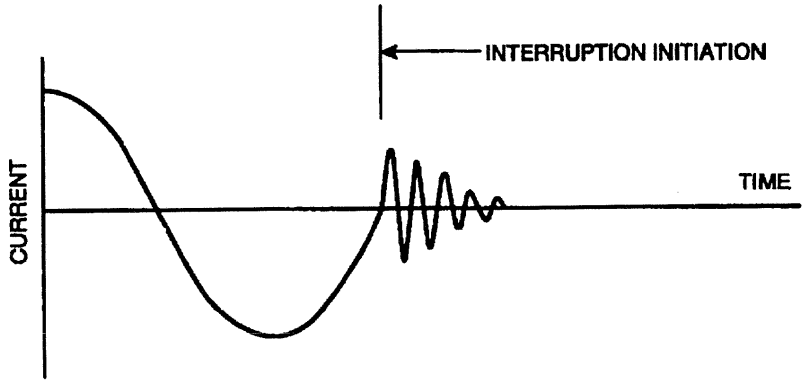

Figure 4-27—Typical behavior of (power-off) switching transient (recovery) current without multiple interruption recognition

Copyright © 1999 IEEE. All rights reserved.

Copyright by the Institute Of Electrical & Electronics Engineers Inc
Fri Jul 20 10:35:00 2001

In general, the fast-rising wavefronts of switching surges are slowed by discontinuities in the capacitance and inductance of the building ac distribution system. This is due primarily to lumped capacitance and inductance from the wavefront's point of incidence to the equipment the surge is terminating to (see Standler [B49]). The surge amplitudes (and any accompanying HFs) are reduced as a function of the overall losses per unit of length in the lossy and impedance mismatched electrical transmission line medium consisting of feeders, branch circuits, transformers, and related items. That is to say, the closer electrically that the equipment is to the sources of switching surges, the more there is a likelihood of the surge affecting victim equipment and that the effect produced would be more severe, and vice-versa.

The generally beneficial attenuating effect of the building ac distribution system, as noted above, is highly dependent upon the first-transition time of the surge. For example, the maximum voltage of a 5 ns first-transition time surge is reduced by a factor of 2, via 60–70 m of a low-voltage, single-phase distribution branch circuit (in steel conduit) (see Martzloff and Leedy [B38]). Very little voltage attenuation is observed for longer first-transition time surges as reported in Martzloff [B36]. Three-phase circuits are expected to behave in similar fashion. Transmission-line effects, such as those involved with reflected voltage waves due to circuit end-termination impedance mismatch conditions, are principally (and dramatically) related to increasing current frequency and increasing transmission line length. Thus, actual design characteristics and conditions should be assessed in each case (see Cianos and Pierce [B8] and Rudenberg [B46]).

4.6.1.2 Environmentally induced surges

Lightning is the most obvious and destructive environmentally (i.e., not man-made) generated electrical transient. In addition, large-scale, rapidly occurring nonarcing atmospheric charge redistribution and ground-based electrostatic discharges (ESD) involving arcing are significant contributors to data disruption and damage to equipment (see Sunde [B51]). ESD is a particular problem when it occurs as an arc between personnel and susceptible equipment unless effective ESD precautions have been taken, or the equipment has been rendered immune by design, testing, and construction.

4.6.1.2.1 Lightning-induced surges

Considerable information exists in the literature as to the mechanics of lightning strikes and their formation. Here it suffices to state that the development of large negative charge centers in the lower regions of clouds cause a corresponding positive charge center to be induced on the earth's surface below them. This results in a potential (voltage) between the cloud and earth. Such charge centers continue to develop until the voltage gradient, at the cloud base, exceeds the dielectric breakdown strength of air. The result is a low-current discharge, i.e., a pilot streamer. The pilot streamer is immediately followed by a higher-current discharge, i.e., a stepped leader, which is followed by one or more (ground-to-cloud) return strikes (see Boyce [B6] and Standler [B49]).

As many as 40 return strikes have been observed (see McCann [B39]). Their currents range from a few hundred amperes to more than 500 kA, as shown in Figure 4-28. In much of North America, 20–40 kA is the value that is often used to estimate typical lightning current

Copyright © 1999 IEEE. All rights reserved.

Copyright by the Institute Of Electrical & Electronics Engineers Inc
Fri Jul 20 10:35:01 2001

conditions. The strike durations are relatively fast acting, existing only 50–100 μs. Most of the energy in the lightning strike is concentrated around below 1 MHz, with <1.0 μs transition times. However, much energy exists both above this frequency and down to dc.

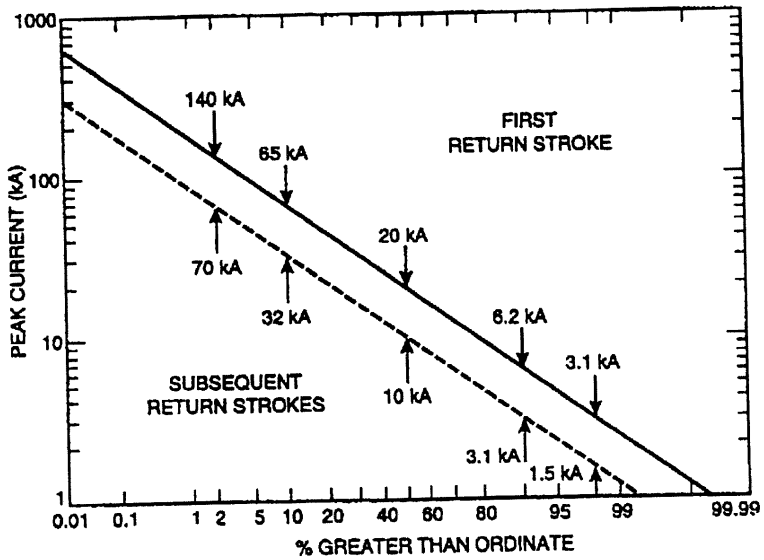

Source: Based on Cianos and Pierce [B8].

Figure 4-28—Distribution of lightning strike current

Importantly, and because of the HF components in the lightning strike's current path, special wiring and grounding techniques must be used to properly conduct lightning currents on sites where electronic equipment is installed. The use of appropriate low-inductance wiring means with appropriate I^2t rating for the conductor(s) and multipoint grounding (MPG) as opposed to high rms current-carrying capability techniques and SPG arrangements, are the core of this special design requirement.

The large current levels associated with a lightning discharge in the earth create an ionized volume in the surrounding soil (ionization region). Within this volume of earth, the lightning energy arcs directly to any highly conductive elements (e.g., buried cables, pipes, and metallic structural elements), thus causing voltage rises considerably higher (and at a more rapid rate) than in areas of earth that are outside the ionization volume. The shape and size of this ionization region is a function of the earth's resistivity, how homogeneous the soil or other earth mineral structure is, and the current in the lightning strike. This region is of particular importance in the suppression of the lightning strike's impact on nearby electronic equipment and/or conducting cables.

Figure 4-29 shows the arcing distances for bare conductors and for insulated conductors as a function of strike current and earth resistivity. Note that arcing distances of over 100 m are possible with soils having an electrical resistivity of 1000 Ω/m or greater (observed in several

Copyright © 1999 IEEE. All rights reserved.

Copyright by the Institute Of Electrical & Electronics Engineers Inc
Fri Jul 20 10:35:02 2001

regions of the U.S.). Outside of this ionization region in the soil, the available lightning-induced voltage is considerably reduced, and thus the induced voltages into nearby electrical conductors are also lessened.

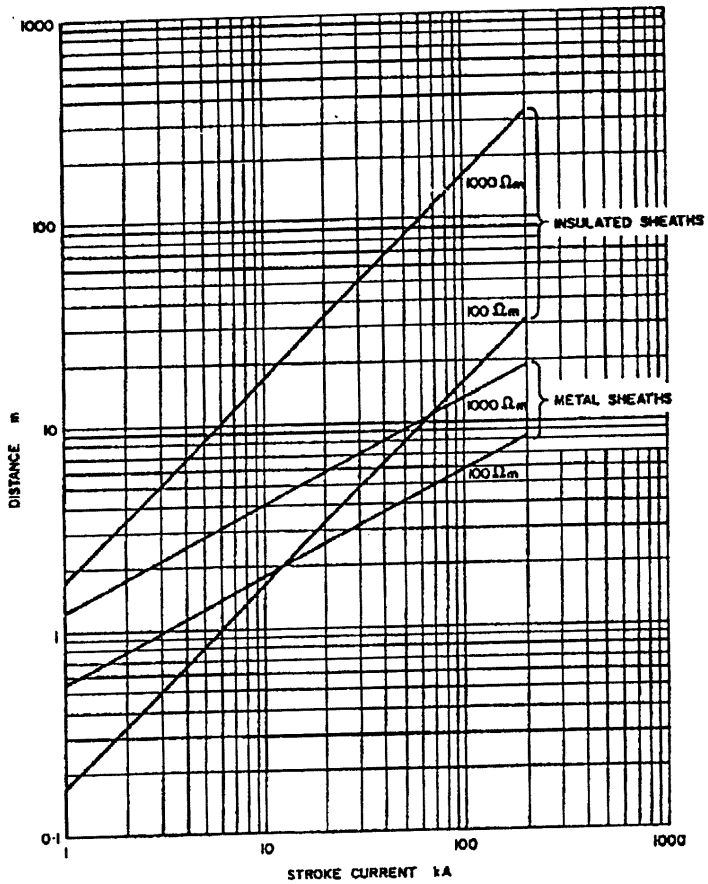

Source: Golde [B15].

Figure 4-29—Arcing distances bare and insulated conductors

Buried cables that suffer dielectric failure during a lightning strike to earth, will have lightning current directly injected into the cable's conductor(s). Coupling will be of little or no concern when this is the case. However, if dielectric failure of the cable's insulation does not occur, then the voltage distribution gradient in the soil will enable localized E-field (e.g., via capacitance) coupling to occur to the cable with maximum effects for that portion running parallel to the gradient. In similar fashion, the current flow in the earth that is parallel to the buried conductor will subject any nearby parallel-oriented cable or other conductor to H-field (magnetic) coupling. These field effects are near field and will rapidly fall off in exponential fashion as distance is increased between the victim conductor and the source of the field.

Copyright © 1999 IEEE. All rights reserved.

Copyright by the Institute Of Electrical & Electronics Engineers Inc
Fri Jul 20 10:35:03 2001

Aerial conductors are similarly affected by lightning strikes directly to them, or to the nearby earth. The most damaging form of strike in this case is the direct strike, with anywhere from all to some of the lightning current being directly injected into the one or more aerial conductors involved. Insulation damage to aerial conductors generally occurs on multiconductor cables, as used for signal and power transmission between locations. Insulation damage (as opposed to damage to insulators) is generally not a factor for typical power distribution conductors that are air-insulated from one another. Both E- and H-field coupling of lightning surges into aerial conductors occur and are both dependent upon proximity and orientation of the conductor to the charge or flux field of the lightning arc-channel.

The parts of the lightning phenomenon most important in the design of lightning protection for electronic equipment are the latter stage of the stepped leader process and the subsequent high-current return discharges. The most important characteristics of the discharge are its current, voltage, waveshape, polarity, charge, and frequency of occurrence.

Cloud-to-cloud discharges can also induce considerable transient energy into aerial and buried conductors (see Boyce [B6]). In this mode, H-field effects appear to be minimal while E-field effects predominate.

4.6.1.2.2 Nonarcing and remote-arcing atmospheric charge redistribution

Significant levels of transient energy can be induced into both buried and overhead conductors from the rapid redistribution of atmospheric (cloud) charge centers. This phenomenon commonly occurs during and immediately after lightning strikes, and is the result of the highly mobile charge centers attempting to find equilibrium with the relatively fixed earth charges and the man-made conductive structures installed on the earth. The rapid movement of charge causes electromagnetic fields similar to those of a cloud-to-cloud strike. The resulting voltage and current surges in overhead and buried conductors are modeled similarly to cloud-to-ground lightning strikes, except with an expanded time base (see Sunde [B51]).

An example of the foregoing might be a high-rise building containing grounded metallic structural elements and electrical systems, along with grounded metallic plumbing systems. During a charge build-up, a relatively slow redistribution of charge occurs in these conductive elements of the building in response to the movement of charge/clouds in the sky. Due to different rates of charge in the building's various metallic systems, as governed by RLC time constants, it is possible to have a charge buildup (or reduction) occur in one item at a faster rate than a nearby one. When this occurs, and when the dielectric breakdown constant of the air between the two items at some very close point of approach is exceeded, a localized arc will occur. This can have effects ranging from simple data upset and corruption to actual equipment damage. And, there may be no first-hand report of any nearby lightning strikes to associate the event with.

Unless a lightning discharge occurs between the charged building structure and an overhead cloud, when the cloud and its charge pass overhead to a new location the charge in the building must also follow and leave the building to find a new point of equilibrium. This means that the charge's buildup rate will generally match its reduction rate and nothing unwanted will be observed to occur—again, unless a nearby lightning strike occurs to some other body,

Copyright © 1999 IEEE. All rights reserved.

Copyright by the Institute Of Electrical & Electronics Engineers Inc
Fri Jul 20 10:35:04 2001

which rapidly discharges the cloud. Then the charge in the building has to find somewhere to go—and do so quickly.

The charge remaining in the building that does not arc to the overhead cloud can only rush back into the earth in an attempt to seek a new charge equilibrium in the earth. A movement of the building's charge to the location of the strike to the nearby structure (or earth) is the only way this occurs. And, since this occurs in rapid fashion, the vertical and diagonal movement of charge through the building's metallic structures towards earth temporarily creates a new distribution of potential in terms of V/m in the building. Also, since an actual current flow in the building's metallic items is occurring with relatively high di/dt rates, it generates a correspondingly intense and rapidly changing magnetic flux. The rate of change for the flux ($d\phi/dt$) is directly related to the rate of current change or di/dt, and as $d\phi/dt$ increases, its ability to induce current into nearby conductors similarly improves.

As a result of the above, power, signal, communications, data, and grounding circuit conductors in the building are likely to have surge voltage and current impressed upon them during electrical storms even when no direct lightning strikes are observed to occur to the victim structure. These unwanted effects involve both localized arcing over small distances and near-field coupling.

4.6.1.2.3 Localized ESD

ESDs typically have a high reference potential, rapid transition time, and short duration, but low amounts of energy. The general close proximity of the localized ESD to victim equipment and circuits generally compensates for the lower amounts of energy involved. This is especially the case when the ESD event occurs directly to some part of the victim equipment or to a circuit conductor. Localized ESD events are known to produce strong electromagnetic fields that have been seen to affect victim equipment up to a distance of 6–9 m (20–30 ft). Therefore, a direct contact ESD to an item of victim equipment is not always necessary for problems to occur.

The typical localized ESD event is characterized by a first-transition time on the order of 1 ns and this produces a bandwidth for the radiated electromagnetic interference (EMI) of about 300 MHz or more (see IEEE Std C57.110-1998 [B29]). The upper range of this bandwidth is clearly in the VHF-UHF range, so low-frequency grounding/bonding, filtering, and shielding techniques will not prevent problems with nearby victim equipment or circuits from occurring.

Localized ESD events are rightfully referred to as miniature lightning bolts. Several charge generation processes exist, including triboelectrification, induction charging, and corona charging (see Greason [B18]). Static charge buildup typically results from a "rubbing action" between two materials (solid or liquid) of different surface-energy characteristics, in the absence of a conductive path between them. This buildup of charge is quickly released when a conductive path (discharge arc) is established (see Boxleitner [B5]). ESD surges can be very harmful to semiconductor devices in electronic equipment. Discharge voltages are often in the range of 5–40 kV (see Gallace and Pujol [B14]). Energy levels tend to be of the order of units of millijoules to tens of millijoules.

Copyright © 1999 IEEE. All rights reserved.

Copyright by the Institute Of Electrical & Electronics Engineers Inc
Fri Jul 20 10:35:05 2001

One can further characterize these surges as having very short first-transition times (high rates of *dv/dt*) and relatively slow decay rates (as compared to lightning or switching induced surges). Since ESD surges have little energy, once they get onto a conductor path they can be relatively easily negated by the use of (fast responding) voltage clamps and capacitors (see Standler [B49]) that are part of ESD-rated SPD equipment. However, unwanted electromagnetic radiation and coupled near-field effects from that portion of the conductor that is upstream from the point of injection for the ESD can be a major problem. Accordingly, the proper placement of the SPD, along with correct routing and shielding of the upstream conductors, is a critical part of the ESD immunity process.

Electric-field shielding of circuits is also an effective means of protection. In particular, proper E-field shielding must be assured on electronic equipment enclosures and for any conductors that penetrate the outer shield, unless they are appropriately filtered and clamped for ESD at the point of penetration.

Fortunately, due to their very short first-transition times and the generally lower impedance and high-loss characteristics of ac feeder and branch circuit power system wiring, ESD surges attenuate considerably within the building ac distribution system. However, ESD can be a serious problem when it occurs to an ac power cord's conductors on a given item of ESD susceptible equipment, since in this case the ESD will occur close to the victim equipment. Typically, the distance in this case will not exceed 4.6 m (15 ft) in length and usually will be in the range of 1.8 m (6 ft) or less.

Also, ESD occurring to signal, data, and other interface or communications cable circuits can be a very serious problem because these conductors not only enter the victim equipment, but after penetration are also both routed in close proximity to, and connect to, sensitive circuits. Therefore, ESD control is most important for ESD sources that are in close proximity to all kinds of victim electronic interface circuits.

In general, for electronic equipment operating areas as opposed to semiconductor manufacturing and board-assembly and service locations, where discrete devices are routinely handled, the most effective ESD control methods include

a) Relative humidity (%RH) control via an HVAC-process cooling system; and

b) Limiting the ESD discharge rate (or path), and slowing the rate of charge buildup by altering the RC time constant of the ESD circuit.

NFPA 77-1993 should be consulted for detailed design information. A discussion of the ESD mechanism and general ESD control techniques, along with test procedures for floor-surface resistance on cellular raised floor systems, is provided in FIPS Pub 94-1983.

4.6.2 Surge coupling mechanisms

Coupling mechanisms for short first-transition time surges can be categorized as free-space coupling phenomena involving near field(s), the far field, or both.

Copyright © 1999 IEEE. All rights reserved.

Copyright by the Institute Of Electrical & Electronics Engineers Inc
Fri Jul 20 10:35:05 2001

4.6.2.1 Free-space coupling

Free-space coupling in the near field involves stray reactive coupling of electric lines of force (e.g., resulting in noise voltages) from high-impedance E fields or, stray magnetic flux lines of force (e.g., resulting in noise currents) from low-impedance H fields between the aggressor source to the victim equipment or circuit(s). In similar fashion, free-space coupling in the far field involves electromagnetic radiation and the subsequent reception of vertically and horizontally polarized plane-waves (e.g., radio wave transmission) at a characteristic impedance of 377 Ω between the aggressor source and victim equipment or circuit(s).

4.6.2.1.1 Inductive (magnetic) coupling (near field)

Electronic circuits that are physically near, but not in direct contact with, a surge path can experience interference with signal processes and even damage without flashover (discharge) occurring. This occurs due to inductive coupling in the near field between the victim circuit and a nearby aggressor conductor of any type that is producing magnetic flux lines generated in direct proportion to the magnitude of current flow in it.

In most cases the foregoing aggressor conductor is not coiled into a multiturn inductor, but is a single conductor that is routed parallel to the victim conductor. However, coiled conductors are possible and must be allowed for. The general equation for determining the magnetic field strength in air (or any nonpermeable medium) is shown in Equation (4-13).

$$H = \frac{I_{\text{amperes}} \cdot N_{\text{turns}}}{2\pi \cdot r_{\text{meters}}} \tag{4-13}$$

where

H is the magnetic field strength in A/m,

I is the current in amperes,

N is the number of turns (1 turn for straight wire),

r is the radius of circle from conductor's center (1 m for a straight wire).

4.6.2.1.2 Magnetic field strength around a conductor in free-space

Due to the high di/dt characteristic of surges, concurrently high $d\phi/dt$ rates for magnetic flux are also produced. This then affects the magnitude of the voltages that can be electromagnetically induced on any nearby conductors. This effect is depicted in Figure 4-30, for the case of surge current on the down conductor of a lightning-interception system. In summary, the voltage induced into the adjacent victim circuit (loop) is a function of

Copyright © 1999 IEEE. All rights reserved.

Copyright by the Institute Of Electrical & Electronics Engineers Inc
Fri Jul 20 10:35:07 2001

a) Its geometry as it relates to the area ($A = d_2 \times L$) enclosed by the victim loop;

b) Its orientation (e.g., parallel to or at some other angle) to the aggressor source for coupling purposes;

c) Its distance from the down conductor; and

d) The time rate of change (*di/dt*) of the surge current, which produces a related high rate of change (*d/dt*) for magnetic flux.

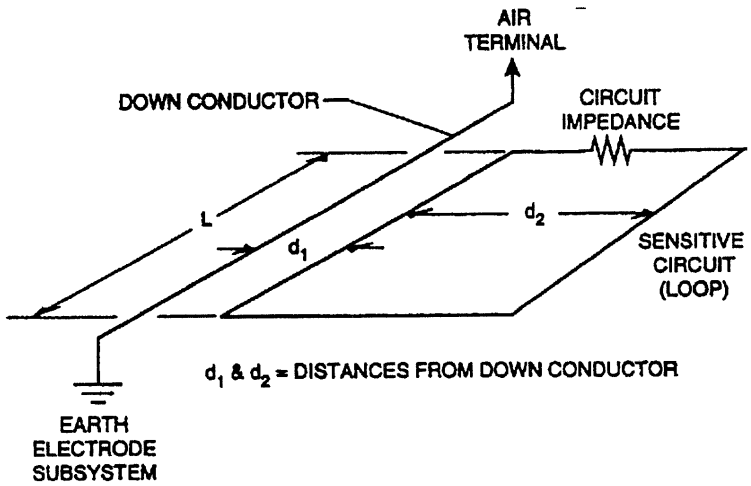

NOTE—Enclosed loop area = Stray or deliberate coupling mechanism.

Sources: Based on MIL-HDBK-419 [B41] and MIL-STD-188-124A [B42].

Figure 4-30—Inductive coupling of surge current to adjacent circuits

Figure 4-31 plots normalized induced voltage per unit of length (*l*) developed in a circuit having various loop geometries.

This general unwanted coupling of EMI energy into circuits is possible whenever any set of similar conductors, with one conductor carrying the initial EMI currents, is in close proximity. This is important since near-field magnetic intensity is subject to cube- and square-law rules. For example, the H field's intensity between very nearby conductors increases or decreases according to the cube of the distance between them, and for most other wider spacings the H field's intensity is related to the square of the distance between them. Using square law is generally suitable for most H-field intensity estimates in real-world building wiring situations.

Copyright © 1999 IEEE. All rights reserved.

Copyright by the Institute Of Electrical & Electronics Engineers Inc
Fri Jul 20 10:35:09 2001

As shown in Figure 4-30, the total loop area in meters-squared (m^2) (A = length × width) enclosed by either of the circuits is a very important parameter, i.e., more enclosed loop area means more coupling problems. More aggressor loop area means more available coupled energy being put into the near field and more victim loop area means more victim conductor interference pick-up in the near field.

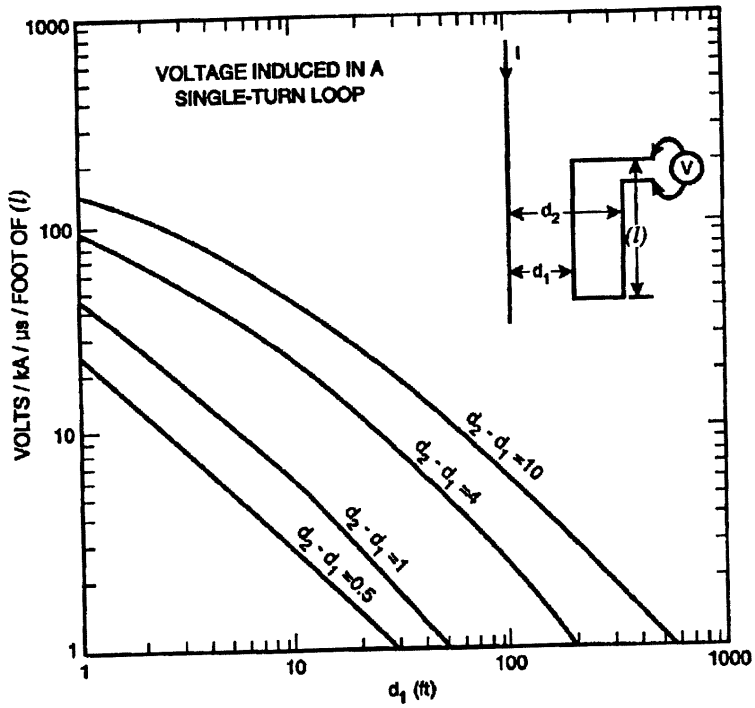

Source: Based on MIL-HDBK-419 [B41] and MIL-STD-188-124A [B42].

Figure 4-31—Normalized induced voltage into circuits (from a single-turn enclosed loop)

In addition to simple nearness of the aggressor and victim loops, coupling is maximized when the enclosed loop areas are parallel to one another. Also, as the loops are positioned at right-angles to one another, the coupling is minimal. Geometries between 0° and 90° cause proportionally reduced or increased coupling effects to occur.

The voltages magnetically induced into circuits are not a function of the circuit impedance, therefore the magnitudes of induced voltages are the same for low- and high-impedance circuits. This fact can be particularly problematic for low-impedance circuits, and any circuit without surge protection. However, since H-field coupling problems may involve high currents and low voltages, most types of SPD equipment will not have much beneficial effect since it will not operate until a particular voltage threshold has been passed. This is very important to understand. Instead, simple inductances used as chokes become the preferred means of limiting currents in the H-field mode since these devices are current and rate of change for current activated, not voltage activated.

Copyright © 1999 IEEE. All rights reserved.

Copyright by the Institute Of Electrical & Electronics Engineers Inc
Fri Jul 20 10:35:10 2001

In further explanation, the relationship between aggressor and victim loop actions can be thought of as being similar to that of an air-core transformer where the aggressor circuit is the primary winding and the victim circuit is the secondary winding. Of course, multiple victim "secondary windings" are possible in real-world situations. This explanation can be extended to note that for the most part, the voltage produced in the victim "secondary winding" is not affected by the impedance connected across it to form a "load." Current then becomes the variable in this regard as the load impedance is changed and the voltage applied remains fairly constant. This is easy to visualize if one considers that a 12 V ac secondary on a transformer is typically just that, even with various loads connected across it. Hence, this kind of coupling produces fairly constant voltage conditions and variable load currents— both a signature of a low-impedance EMI source-load arrangement where high currents and low voltages are the norm.

From the above it should be appreciated that test and trouble-shooting efforts will not fare well if voltage indicators are used instead of current indicators. Therefore, most successful efforts involving H-field problems will involve wide-band current transformers (i.e., CTs) and not voltage probes. Note that the typical CT is a closed-loop system from a magnetics standpoint, so the CT will normally reject H-field influences that do not pass directly through the CT's aperture. However, if any air gap is allowed to exist at the point where the CT's jaws contact while closed, the CT will no longer act in a closed-loop fashion, but will act largely like an inductor—ready to be unwantedly affected by impinging H fields from external sources.

4.6.2.1.3 Capacitive (electrostatic) coupling (near field)

Capacitive coupling of EMI energy is an electrostatic phenomenon. It occurs between the metallic portions of circuits that are insulated from one another by a dielectric, such as air or any other insulating medium. Parameters of interest are spacing, mutually exposed area, and dielectric constant between the source and the circuit (see Radio Engineers Handbook [B45]). Capacitive coupling occurs due to the effects of the E-field developing charge across the dielectric medium. The principal EMI effects are those produced by electric potential (voltage) as opposed to current flow.

In general, E fields are coupled between the aggressor source and victim circuit pathways in a manner that is fairly easy to shield. Typical techniques usually involve using simple grounded metal shields. Such shields may be made from thin metals (e.g., foils) since they normally are not called upon to carry any RMS currents. Electric field shielding may be thought of as being akin to providing shading from a light source, except that the shield must be fully enclosing to completely do the job.

EMI coupling levels to the victim circuit are dependent upon the amplitude and rate of change of the voltage in the aggressor E field, the coupling capacitance between the aggressor and victim circuits, stray (e.g., parasitic) capacitance between circuit elements in the victim circuit itself, and most importantly, the impedance of the victim circuit itself.

Copyright © 1999 IEEE. All rights reserved.

Copyright by the Institute Of Electrical & Electronics Engineers Inc
Fri Jul 20 10:35:10 2001

Accordingly, victim circuits of low impedance are generally not much affected by E-field EMI, but high-impedance circuits are. This occurs because the former are generally current driven while the latter are voltage driven, and voltage is exactly what the E field couples using capacitance between the aggressor and victim circuits.

Note that the amount of EMI in the form of an interfering electric charge (Q) that an aggressor E field can impart to a victim circuit at a given potential between the two, is directly proportional to the product of capacitance and voltage ($Q = CE$).

Also, since capacitive reactance (e.g., X_c in ohms) is inversely proportional to the E field's frequency, high-frequency E fields produce greater EMI problems for a given capacity between the aggressor and victim circuit. With lower values of X_c, greater amounts of EMI current can be transported between the aggressor and victim circuit per volt of E field.

E-field EMI is not to be confused with ESD phenomena since with E-field EMI no discharge arc is involved. With ESD, there is often definite current flow between the aggressor and victim circuit that involves a conductive path via an electric arc. This is not the case with E-field EMI.

4.6.2.2 Far-field (electromagnetic) coupling

For victim circuits, far-field coupling of electromagnetic energy occurs when the circuit acts as a receiving antenna for incident electromagnetic energy (see Blake [B4]) arriving in the form of a radio wave that contains both E-field and H-field components that are rotated 90° apart.

In far-field EMI problems, the aggressor circuit itself is not necessarily the source of the radio-frequency (RF) energy identified as EMI, but the antenna from which this energy is being radiated always is. At first glance this seems to be a subtle difference, but in fact it is not. For example, a circuit may be a prolific generator of RF fields, but if these fields cannot be effectively radiated into the environment by an antenna, there is no practical EMI problem except possibly within the equipment where the RF is being generated, and possibly for intended purposes.

EMI currents or voltages induced into victim circuits from an electromagnetic wave increase with the intensity of the electromagnetic field (e.g., RF field strength, as typically measured in μV/m at a given frequency) in the immediate vicinity of the victim circuit, and with the victim circuit's effectiveness as a receiving antenna. This latter point is very important since it underscores how an otherwise relatively EMI-immune victim circuit can be affected if it is connected into the external environment by a power, grounding, or signal conductor that can act as an EMI antenna that efficiently transports overwhelming amounts of EMI into victim equipment.

The unwanted effects of RF EMI into the victim circuit are typically exacerbated when the victim circuit itself, or its interfacing power, grounding, or signal wiring, exhibits conditions of resonance at the interfering field's frequencies. Since a great deal of personal communication equipment now operates over the entire range from around 150 MHz to about 1.2 GHz, this can

Copyright © 1999 IEEE. All rights reserved.

Copyright by the Institute Of Electrical & Electronics Engineers Inc
Fri Jul 20 10:35:12 2001

be a critical problem where small lengths of conductors can act as very efficient radiators or receptors of EMI. For example, electrical half-waves occur on conductors in free-space at approximately 1 m (3.28 ft) at 150 MHz and 0.125 m (0.41 ft) at 1.2 GHz, and quarter-waves occur at one-half of each of these lengths.

The strength of the RF field involved in the EMI is an inverse-law function of the cube or square of the distance from the radiating source. Very close to the radiating source the cube-law function applies and further away the square-law function is applicable. The victim circuit's effectiveness (e.g., efficiency) as an antenna depends on its electrical length relative to the wavelength(s) of the EMI signal(s), its total enclosed area (e.g., EMI signal capture area), and its physical orientation to the EMI source (e.g., polarization and parallelism).

4.6.3 Interaction with buried cables

Analysis and measurements of transient voltages induced into buried cables (see Boyce [B6] and Sunde [B51]) indicate that surges are a function of the cable's electrical and physical construction parameters, depth of the cable(s), soil resistivity, cable terminations, and the additional degree of shielding provided by buildings, water pipes, power lines, and other nearby conductors.

Cable parameters of importance are the cable length, the "transfer impedance" of the cable's shield (if so equipped), and the dielectric strength of the insulating jackets (see Nordgard and Chen [B43]). Soil resistivity is also important in determining the magnitude of surges induced by lightning. Nordgard and Chen [B43] and Sunde [B52] indicate that the peak transient voltages and currents are approximately proportional to the square root of the soil's resistivity.

Deeply buried cables generally suffer less from the direct effects of lightning strikes, due to greater attenuation of the surge's higher frequencies near the earth's surface. Similarly, guard-wires above buried cables can be effective in reducing the impact of ground currents.

The earth itself is not known to be a low-loss medium of fixed resistivity for all frequencies of current flow within it. Typically, ac earth currents cannot flow without producing substantial voltage drop and associated fall off of current both as a function of distance and of the frequency of the current. This occurs since all types of earth appear to exhibit increasingly greater amounts of *IR* loss within it as the impressed current's frequency rises. Hence, dc and ac of lower frequency will not only penetrate more deeply into the soil from a point of injection or return, but will suffer less attenuation over a given path's distance than will higher frequency ones. Hence for a given ac voltage, the produced current in and through the earth will be transported with less loss over a given path distance at 60 Hz (and the first several harmonics thereof) than will a lightning current which is comprised of frequencies in the range of tens of kHz to tens of MHz. DC will be transported over the greatest path distance with the least loss of all.

Hence, for a given voltage, a resulting 60 Hz earth current (and the several harmonics thereof) will be more efficiently carried in the earth over a given path distance than will a lightning current driven by an equal amount of voltage, and which has current frequency measured in

Copyright © 1999 IEEE. All rights reserved.

Copyright by the Institute Of Electrical & Electronics Engineers Inc
Fri Jul 20 10:35:13 2001

terms of tens of kHz and tens of MHz. Lightning, however, typically makes up for this seeming discrepancy by the sheer amount of voltage applied to the earth during a strike so that more amperes are initially produced at the point of current injection than is possible with most 60 Hz systems.

The foregoing is important in that a conducted current flow in the earth itself produces both an E and H field proportional to voltage and current along the path of current conduction in earth, and these fields are capable of creating EMI problems with any cables buried in the earth where these fields can impact the buried cable. In extreme cases, the associated E field is known to produce localized points of dielectric breakdown along the victim buried cable. Such breakdown points are also often characterized by predictable spacing at quarter-wave points along the damaged cable, when high-frequency currents are involved, such as from a lightning strike.

4.6.4 Interaction with above-ground conductors

The use of aerial conductors to intercept lightning strikes and protect cables below them from the direct effects of lightning has been well demonstrated. Several theories have been developed to explain the size of the protected zone. They are reviewed in Golde [B15]. Use of these concepts can reduce both the voltage and current surge levels that above-ground power and signal lines experience for a given lightning strike.

Lightning-generated surges on the electric power supplier's ac distribution systems, and at the user's site, have been studied extensively and have been reported in the literature. Golde [B15] and Vorgucic [B61] are examples of these studies. Golde [B15] and Keeling [B30] also provide a history and bibliographies of the problem and a summary of measurements and operating experiences pertinent to remote ac distribution lines. The types of damage observed and the surges measured at distribution terminals are also discussed. Protection strategies for terminal equipment have been well developed and consist of surge current diverters and/or grounded overhead guard wires. Good earth ground electrode systems, of low-inductance design at the points of surge-affected conductor interface to or from a building or other structure, are generally important in obtaining maximum protection from the protection strategy chosen at a given location.

Elevated conductors (ac distribution, etc.) form geometric loops of various sizes and orientations with varying degrees of surge-current coupling efficiency. As a general statement, the open-circuit voltages induced in these loops are a function of loop size and the time rate of change of the magnetic flux through the loop cross-sectional area (see Golde [B15]). Therefore, the peak open-circuit voltage is dependent on the peak rate of change of the strike current. The resulting voltage waveform is determined by the time derivative of the strike current.

In general, induced voltage waveforms on overhead conductors (that result from lightning strikes) are a quick unipolar pulse followed by a long decaying tail. Peak currents in these loops can be theoretically bounded by considering the load to be a short circuit.

 Copyright © 1999 IEEE. All rights reserved.

Copyright by the Institute Of Electrical & Electronics Engineers Inc
Fri Jul 20 10:35:13 2001

4.6.5 Potential impact of EMI

Depending on the severity of the surge and the susceptibility of the equipment, three types of occurrences are possible (in addition to damage caused to cables and conductors): data disruption, hardware stress, and hardware destruction.

4.6.5.1 Type-I, signal-data disruption

Signal-carrying circuits are susceptible to surge interference via conduction, inductive and capacitive coupling, and electromagnetic radiation. Both near- and far-field phenomena affect these circuits as EMI. When surges are actually observed on signal lines, it's often assumed, just because the signal circuits are still working, that the noise is below the circuit's EMI threshold, and things are therefore acceptable. This is not so (see Greason [B18]), as explained in the following paragraphs.

Digital circuits characteristically latch in either a "high" or a "low" state in which they are relatively stable (e.g., they are in a full cut-off or saturated full-on state). Therefore, it takes a strong randomly applied signal to upset a fully latched circuit from one state to the other. Moreover, since most such circuits spend most of their working life latched into one state or the other, they spend very little time in transition between states where they are most susceptible to EMI.

For example, when a bistable circuit is in transition between states, it is very susceptible to interference since it is operating in the Class-A region. The circuit behaves as a positive feedback amplifier and can amplify very weak signals to the point of saturating its switching semiconductor. Thus, even very low-magnitude surges can cause data corruption or upset if they occur at the moment of a deliberately induced state transition. A surge arriving at this time has a 50/50 chance of driving the circuit in the opposite direction to that which was intended, causing a data error by changing the digital signal from its intended "high" or "low" state. These data errors may be immediately obvious or may only be evident under a unique set of logical and programmatic conditions that occur infrequently— sometimes only once or twice daily, or weekly, etc. Coincidence between a state transition[4] and an EMI event is therefore what determines the frequency of problems at a given site and not just the mere presence or absence of EMI on the signal path when it is observed during a limited period of examination.

When recorded line-voltage disturbances coincide with computer malfunctions, it is often assumed that the line-voltage change was responsible for the malfunction. Although this is a possibility, a more likely cause is the secondary effect of a rapid change of current in ground conductors that creates surge voltages among different parts of the common ground referencing system interconnections rather than filtering the surge from its supply voltage (see FIPS Pub 94-1983).

[4]Typically, this means at equipment "clock time" where the state of the latched circuit elements are all permitted to be changed if the gating conditions are correct.

Copyright © 1999 IEEE. All rights reserved.

Copyright by the Institute Of Electrical & Electronics Engineers Inc
Fri Jul 20 10:35:14 2001

For one example of the foregoing, the presence of OEM-installed, low-pass, LC network filters with line-to-ground/chassis-connected shunt elements (e.g., capacitors) ensures that some portion of the current from any ac line disturbance is conducted to or from the equipment grounding system associated with the subject electronics equipment and its associated ac power system. This is especially the case with CM disturbances that occur on the ac power system.

The foregoing is especially important to appreciate since almost all commercially available equipment using digital logic designs, and for purposes of both enhanced performance and safety, references one terminal of the logic voltage power supply to the equipment's frame/enclosure as "ground"— a point that is also common to the ac system's EGC system and the LC filters as just described above. Hence, unwanted currents on the equipment grounding system have ingress to the logic elements via the indicated OEM provided path. From this point, the unwanted currents in the form of EMI can be propagated between items of equipment via the typical cabling systems used to provide inter-unit transport of power, signals, data, or combinations thereof.

In such unusual (and typically undesirable) cases where the above conductive path between the logic power supply's conductors and the equipment's metal frame/enclosure is not provided due to dielectric isolation, then stray or parasitic reactive coupling is usually sufficient between the frame/enclosure and the power supply and signal leads in the equipment to provide for a nearly equivalent path to exist. This is important since it goes to the heart of why floating or otherwise isolated grounding systems rarely (if ever) provide the anticipated protection from EMI that is involved with the equipment's grounding system, and which is occurring at high frequency (HF) within the response bandwidth of the victim circuits.

For a variety of reasons, many electronic loads contain amplifiers that are routinely used to amplify the clock and data signals. Any unwanted signal (i.e., noise) entering the input to such amplifiers, where that noise signal is completely or partially within the amplifier's bandwidth, is amplified along with the desired signals. Once this happens, the unwanted, amplified noise signal is distributed within the system in a stronger form than when it entered. About the worst scenario possible is when the noise signal is combined with the clock signal and both are amplified and distributed throughout the electronic system. This situation makes the noise appear to come from everywhere so it is very difficult to track the point of origin, and it also makes the noise available to a wider range of circuits that then can be affected by it.

4.6.5.2 Type-II, gradual hardware stress and latent failures

A single lightning or switching surge often causes immediate, but not readily apparent physical damage to semiconductor devices. This damage then finally appears at some later time at which point the failure is obvious. This once controversial, but now accepted condition is called latent semiconductor device failure. For example, a single larger surge or several repetitive exposures to lower magnitude surges often cause a gradual performance deterioration, which may finally be associated with intermittent equipment operation as opposed to immediate catastrophic failure of the semiconductor device. In such cases where the semiconductor itself has had its performance marginalized, it is often difficult to differentiate between software- and hardware-induced errors.

 Copyright © 1999 IEEE. All rights reserved.

Copyright by the Institute Of Electrical & Electronics Engineers Inc
Fri Jul 20 10:35:15 2001

Latent failures relating to ac power and grounding surge conditions are observed primarily in semiconductor devices used in equipment interface applications or power supplies, but may also generally occur in insulating materials as are used in transformers, chokes, capacitors, etc.

After repeated stress and when overstressed, typical forms of SPDs such as gas-tubes, carbon-blocks, zener diodes, silicon avalanche diodes, and varistor elements are also susceptible to Type-II damage over time—particularly if they have not been very conservatively rated for the intended application.

4.6.5.3 Type-III, immediate hardware destruction

The third possible impact of surges is the immediately obvious and total destruction of hardware components in a single incident. Table 4-6 shows the threshold voltages and energy levels for destruction of selected semiconductors that are commonly used in electronic equipment (see Gallace and Pujol [B14] and Greason [B18]). Similarly, larger devices, such as signal and power transformers, and relay coils; and power supply components, such as chokes and capacitors, can be destroyed. Type-III events also include general arc-over damage within equipment.

Table 4-6—Thresholds of failure of selected semiconductors

Semiconductor device type	Disruption energy (J)	Destruction energy (J)
Digital integrated circuits	10^{-9}	10^{-6}
Analog integrated circuits	10^{-8}	10^{-6}
Low-noise transistors and diodes	10^{-7}	10^{-6}
High-speed transistors and ICs	10^{-6}	10^{-5}
Low-power transistors and signal diodes	10^{-5}	10^{-4}
Medium-power transistors	10^{-4}	10^{-3}
Zeners and rectifiers	10^{-3}	10^{-2}
High-power transistors	10^{-2}	10^{-1}
Power thyristors and power diodes	10^{-1}	10^{0}

Copyright © 1999 IEEE. All rights reserved.

Copyright by the Institute Of Electrical & Electronics Engineers Inc
Fri Jul 20 10:35:16 2001

Typical forms of SPDs such as gas-tubes, carbon-blocks, zener diodes, silicon avalanche diodes, and varistor elements are also ultimately susceptible to immediate Type-III damage and destruction.

4.6.6 Surge voltage frequency and transmission path losses

Knowledge of the frequency distribution of voltage (or current) within surges can be important in assessing their impact on electronic equipment. Depending on the surge waveshape, its voltage and current spectra, $V(\omega)$ and $I(\omega)$, can vary considerably. The effective propagation of current surges having high-frequency components requires paths that are of low loss and impedance at the same high frequencies.

Typical building power wiring paths are transmission lines that are lossy and are widely thought of to possess a nonuniform, but roughly 50 Ω characteristic impedance. Such building wiring transmission lines for surge currents at HF have been shown by Martzloff [B35] to be both lossy and capable of transporting a harmful surge current between the point of injection to the victim equipment attached as a load. This typically occurs where a sufficiently large surge current is injected into the wiring system so that after path losses occur, a destructive amount is still present at the end of the wiring path where the victim equipment is connected.

In addition, even with lossy pathways at HF, the typical impedance mismatch between the transmission line (e.g., building wiring circuit) and the terminating equipment (e.g., electrical or electronic) can allow for surge current voltage or current reflections to occur at the point of impedance mismatch, and which can then create a doubling of the incident waveform's amplitude at one or more points on the pathway—particularly at the point of wiring interface to the load equipment. This is a well-understood phenomena, which is described in FIPS Pub 94-1983 on the electric supply grid where a radial distribution system ends in an unterminated stub. The problem is that the effect also occurs within buildings and on the interior wiring systems serving electrical and electronic load equipment.

Figure 4-32 depicts the frequency spectra (Fourier transforms) of five standard surge voltage waveforms (see IEEE Std C62.41-1991, IEC 60801-4: 1988 [B22], and Standler [B49]). The 0.0 dB reference level is 1 V or 1 A. The peak voltage is 6 kV for both the 1.2/50 ms and 100 kHz ring wave, 4 kV for the electrical fast transient (EFT), and the 0.6 kV for the 10/1000 μs surges, respectively. The peak current is 3 kA for the 8/20 ms surge. Figure 4-20 indicates that most of the commonly utilized surge spectra have relatively large voltage (current) components between dc and 100 kHz. The shorter first-transition time surges (e.g., EFT) have larger fractions of their total energy content at higher frequencies.

Copyright © 1999 IEEE. All rights reserved.

Copyright by the Institute Of Electrical & Electronics Engineers Inc
Fri Jul 20 10:35:17 2001

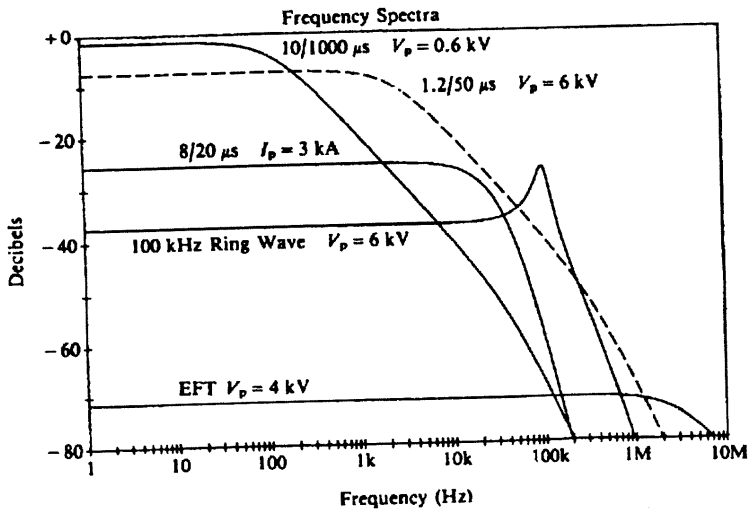

Source: Standler [B49].

Figure 4-32—Frequency spectra of common surge test waveforms

4.7 Grounding subsystems

For purposes of safety only, electronic systems must be solidly grounded, i.e., directly connected with earth and equipment ground as required by either the NEC, NFPA 780-1997, or both. Grounding systems designed for a typical electronic equipment facility can be conceptualized as having four (4) distinct, solidly (e.g., galvanically) interconnected, functional subsystems. They are as follows:

a) NEC-described fault and personnel protection subsystems consisting of the following solidly interconnected items:
   1) AC or dc system grounding of the identified conductor;
   2) EGC systems; and
   3) Earth grounding electrode(s) and related grounding electrode conductor(s) (GEC).

b) SRS
   1) Typically installed per the electronic system's OEM instructions; and
   2) Per FIPS Pub 94-1983 and recommendations made in this publication in Chapter 8.

c) Lightning protection subsystem
   1) As installed per NFPA 780-1997; and
   2) In conformance with the NEC.

Copyright © 1999 IEEE. All rights reserved.

Copyright by the Institute Of Electrical & Electronics Engineers Inc
Fri Jul 20 10:35:18 2001

d) Telecommunications, data transmission, and signaling circuit surge protection grounding subsystem
   1) As installed per the telecommunications equipment's OEM instructions;
   2) As installed per the information and references provided in Chapter 8 and Chapter 9; and
   3) As installed in conformance with the requirements of the NEC.

Note that for well-established purposes of fire and shock safety, these functional grounding subsystems are all eventually solidly interconnected to a common earth electrode system at the site's service equipment (SEQ) via the requirements of the NEC, NFPA 780-1997, or both. Per the NEC, other earth grounding electrodes may also be involved with the various grounding subsystems (see IEEE Std 142-1991), but these cannot in any way be isolated (e.g., by galvanic isolation or earth resistivity) from one another, or from the site's main earth grounding electrode at the SEQ.

All of the above described grounding systems must be made electrically common to one another by use of a grounding conductor(s) so as to form a single, interconnected earth grounding electrode system at the site. Failure to provide this necessary bonding will place whatever equipment that, or personnel who, may be deliberately or accidentally connected between the two isolated grounding systems at whatever potential that can be developed between them. Such a potential is typically due to ac or dc system ground faults, lightning, or other currents that can produce an *IR* drop when flowing in the commonly shared grounding medium—earth.

The above problem still exists even when the earth grounding electrode(s) provided have excellent low-resistance connectivity to the earth, such as in the 1 Ω range. For example, a lightning strike nearby one electrode with a conservative 20–40 kA would produce a ground-rise (e.g., ±offset) potential of between 20 kV and 40 kV between two earth grounding electrodes with only 1 Ω of resistance between them (e.g., $E = IR$). This is too high a potential for any reasonably constructed signal-level insulation system to withstand, let alone any connected solid-state electronic equipment components. Alternately, such high potentials are known to produce arcing and dielectric breakdown at points along the current's path and within equipment, and which then may cause fires.[5]

4.7.1 Basic grounding and bonding concepts

For purposes of grounding, effective bonding consists of a set of grounding conductor interconnections and terminations that, taken together, form a usefully low-impedance path (at all frequencies of interest) for the flow of current though them. If done properly, this arrangement then can be used to successfully limit the development of unwanted potentials across the ends of the bonding connection.

[5]The problem of dielectric breakdown, arcing, and possible fire reaches a high level of probability within electrical or electronic equipment where any insulated conductor referenced to a separate, isolated earth grounding electrode system is brought into an equipment enclosure and where that equipment is itself equipment grounded by connection to the NEC described safety grounding system consisting of the metal conduit/raceway, equipment (safety) grounding conductor (EGC) system (e.g., "greenwires"), and equipment enclosure.

 Copyright © 1999 IEEE. All rights reserved.

Copyright by the Institute Of Electrical & Electronics Engineers Inc
Fri Jul 20 10:35:20 2001

The objective is that each termination (bond) be such that the electrical properties of the total path are a function of all of the connected elements, and not just the interconnections. Conversely, poor bonding is often the principal cause of many hazardous and noise-producing situations, e.g., unacceptable voltage drops, heat generation, intermittent operation, electrical noise, and high-resistance grounds. A large cross-sectional area grounding conductor (GC) is of little use if it is terminated via a poorly bonded connection.

It must be stressed that the low- and high-frequency characteristics of most grounding and related bonding techniques are quite different. Their high-frequency characteristics are of particular importance for most electronic equipment applications where both low-level and high-level, short-duration, rapid transition time impulses are the typical currents propagated through the bonding conductor (see MIL-STD-188-124A [B42]).

The following factors are important when characterizing alternative bonding methods:

a) *Contact resistance.* Contact resistance of conductor and shield terminations, and their aging, are of importance.

b) *Dissimilar materials.* Dissimilar materials are problematic in that they often set up galvanic half-cells or rectifying junctions that result in EMI generation at the junction, corrosive failure of the connection, or both.

c) *Skin effect.* High-frequency currents do not penetrate deeply into high-conductivity materials. Therefore, the high-frequency impedance of bonds must be assessed.

d) *Bond reactance.* Bond size, geometry, and the physical relationship between conductors being bonded can introduce reactive components into the impedance of the bond. The minimization of self-inductance in the path is of utmost importance at high frequency.

e) *Conductor resistance.* The total resistance of the bonding conductor's path is of importance when the *IR* characteristics (at dc and low frequency) are such that, for a specific current level, too much potential can be developed across the path for the connection to be effective.

f) *Overheating and fusing point.* The selection of the conductor and bonds must not place the arrangement into safety conflict with its NEC rms ampacity limits or the instantaneous fusing I^2t characteristics of the conductor or its bonding terminations.

4.7.1.1 Grounding/bonding conductor self-resonance effects

Resonance occurs in conductors, primarily due to their lack of lumped capacitive and lumped inductive elements that are replaced by distributed ones along the length of the conductor. Therefore, the conductors of ac electrical distribution systems, which exhibit only distributed capacitance and inductance, oscillate when excited by certain voltage waveforms. The conductors, in essence, act as inadvertent sources (or receptors) of closely-coupled near-field noise, and in the far field they can radiate (or receive) noise by acting as antennae. This type of problem is not often observed in conductors that make up a crude, lossy transmission line, such as an ac system feeder or branch circuit contained in a conduit/raceway; but it is a major concern on overhead suspended power and grounding conductors, externally installed

Copyright © 1999 IEEE. All rights reserved.

Copyright by the Institute Of Electrical & Electronics Engineers Inc
Fri Jul 20 10:35:22 2001

grounding/bonding conductors, almost all GEC, and with externally installed signal level and telecommunications cables that are routed in ways that form enclosed-loop areas.

Conductor self-resonance occurs when a conductor's electrical length equals an even or odd multiple of quarter-wavelength of an impressed voltage waveform. When the conductor is self-resonant in odd multiples of quarter-wavelength, the result is a virtual open-circuit of nearly infinite impedance, with maximum voltage drop from end-to-end across it. However, under conditions of even multiples of quarter-wavelength resonance, the conductor will appear as a functioning electrical connection from end-to-end and with approximately equal impedance at each end (see FIPS Pub 94-1983). Figure 4-33 depicts this relationship.

The relationship between odd multiples of quarter-wavelength resonant conductor conditions, length, and frequency is shown in Equation (4-14).

$$L_{\text{resonance}} = \frac{cn}{4f_{\text{resonance}}} \tag{4-14}$$

where

$L_{\text{resonance}}$	is the resonant conductor length (m),
n	is any odd integer (1, 3, 5, ...),
c	is the speed of light in free space (3×10^8 m/s),
$f_{\text{resonance}}$	is the frequency of excitation in the conductor (Hz).

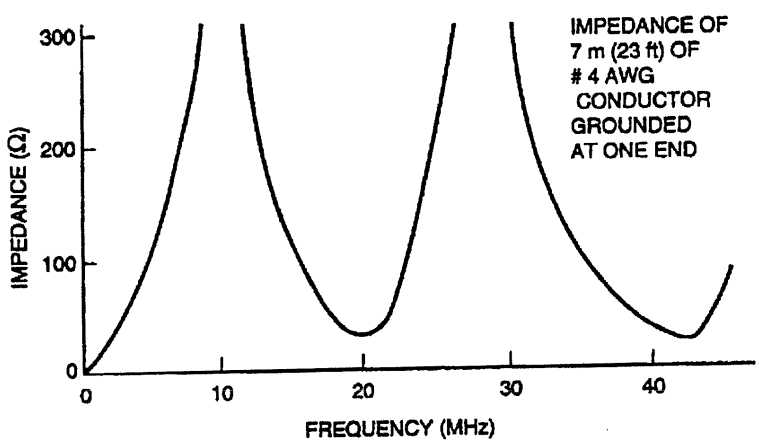

Source: FIPS Pub 94-1983.

Figure 4-33—Resonance characteristics of conductors

In practice, designers must be concerned with the lowest frequency at which a given grounding/bonding conductor length will resonate ($n = 1$). Therefore, grounding/bonding conductors should always be chosen so as not to have physical lengths approaching resonant conditions of near quarter-wavelength and odd multiples thereof for any electrical noise frequencies that

Copyright © 1999 IEEE. All rights reserved.

Copyright by the Institute Of Electrical & Electronics Engineers Inc
Fri Jul 20 10:35:23 2001

might be imposed on the conductor. One hedge against this is to employ multiple grounding/bonding conductors between the items being bonded to and from, and to make each of a different length than the other. Thus, while one path may be undergoing resonance conditions, one or more of the others will not. Usually a difference of 20% in conductor lengths will suffice (FIPS Pub 94-1983).

The above only works, however, when the multiple grounding/bonding conductors are spaced far enough apart from one another to minimize the highly unwanted effects of mutual coupling in the near field (principally inductive) between them. The best hedge is therefore to route them separately and install them on opposing corners of equipment cabinets as compared to attaching them to the same bolt, etc. Thus, the grounding/bonding conductors will appear as relatively independent inductive paths for current and, since they are inductive and in parallel, they will present a lower impedance across the path as inductors in parallel are supposed to do.

4.7.1.2 Minimizing inductance on the grounding/bonding conductor's path

Grounding/bonding conductors are also subject to the effects of magnetism when transient currents, such as impulses associated with "noise" and lightning, are passed through them. Hence, the conductors must be configured in such a way as to minimize the production of transient voltages across their lengths when carrying such currents. This is usually referred to as an $-e = L\ (di/dt)$ effect, and the equation is very useful in representing the voltage developed across an inductance when a current is forced to flow in it by an applied voltage. There is also the problem of what voltage will be developed across an inductance when the driving current through it is abruptly interrupted. What will be the transient voltage developed under this condition?

The actual problem involves the consideration of both the peak current through the path's inductance and how much voltage can be developed in the distributed or lumped capacitance that is associated with the grounding/bonding conductor. Hence, the real-world problem is represented in Equation (4-15).

$$E_{max} = I_{peak}\sqrt{\frac{L_{path}}{C_{stray\ path}}} \tag{4-15}$$

where

E_{max} is the maximum voltage developed across the ground path,

I_{peak} is the maximum current flowing in the ground path,

L_{path} is the inductance of the ground path in Henries,

$C_{stray\ path}$ is the stray capacitance of the ground path in Farads.

The use of Equation (4-15) is derived from Chapter 7 in Ott [B44] and is necessary in view of the fact that the stray or parasitic capacitance involved with the typical grounding/bonding path's connections and conductor may not be ignored. In short, the problem does not involve

Copyright © 1999 IEEE. All rights reserved.

Copyright by the Institute Of Electrical & Electronics Engineers Inc
Fri Jul 20 10:35:24 2001

a theoretical inductance in free space not coupled to anything. Further, the stray capacitance may be quite large, as when the grounding/bonding connection exists across two closely spaced-apart metal cabinets or racks, each with significant surface area showing to the other. This forms a neat air-dielectric capacitance that is integral to the understanding of the circuit and that cannot be ignored.

From the foregoing, it should be apparent that there is no real substitute for directly abutting equipment units and multiply bolting them together so as to obviate the need for discrete grounding/bonding conductors. This action results in a two-fold attack on the problem:

a) It minimizes the stray capacitance between the units; and

b) It virtually eliminates the inductance across the grounding/bonding path.

As a result, even for a high peak value of current, the developed voltage must be low. Signal circuits routed between two such cabinets are thereby not subjected to high values of CM disturbance.

An additional attack on the problem is provided when the designer provides for a an externally applied grounding/bonding structure of a type that discourages the concentration of any current flow in any one or a few of the grounding/bonding conductors making up its network. This is typically accomplished by use of an SRS such as one comprised of a plane or grid. These are typically and respectively called a signal reference ground-plane (SRGP) and signal reference ground-grid (SRGG).

When direct, unit-to-unit grounding/bonding and SRS techniques with low self-inductance grounding/bonding conductors are properly combined, the CM transient voltage and current problem is largely eliminated in practice.

4.7.1.3 Length restrictions on grounding/bonding conductors

For the reliable operation of the grounding/bonding conductor, it is recommended practice (see FIPS Pub 94-1983) to install grounding/bonding conductors whose electrical length is a fraction of a wavelength long and where it does not exceed $(1/20)\lambda$ at the highest expected frequency of interest. While this is an adequate restriction for most commercial practice, more critical applications may require limits approaching $(1/50)\lambda$ or less. The highest frequency of interest in this case is defined as the fastest transition time in the expected waveform, and not its duration or repetition rate. For example, the important part of a 100 kHz square-wave clocking or data signal that might appear on the grounding/bonding conductor with a 50% duty cycle is the time it takes the impulse's first transition (e.g., leading edge rise-time) to go from 10% to 90% of its peak amplitude.

Wave and transmission line theory must also be invoked, in addition to circuit theory, to fully understand the operation of the typical grounding/bonding connection under transient impulse conditions. Accordingly, note that a grounding/bonding conductor, whose electrical length is such that an entire CM current impulse may be contained upon it while it is transported from one end to the other and with the grounding/bonding conductor acting as a transmission line, is completely useless as a means of either controlling transient voltages or currents in the path.

Copyright © 1999 IEEE. All rights reserved.

Copyright by the Institute Of Electrical & Electronics Engineers Inc
Fri Jul 20 10:35:25 2001

Since the impulse cannot be present at both ends of the path at the same time, there is no way that the potential can be equalized between the end-connected items of equipment. And in any case, since the terminations at the ends of such a transmission line are certain to present impedance mismatch, the initial and subsequent current and voltage wavefronts will be reflected and re-reflected back and forth across the path until damped-out by the losses. Thus, a single impulse may be turned into many with the ends of the path alternately being placed at different potential and polarity, and at equipotential (e.g., with the impulse in transit and no impulse having yet arrived at either end). Finally, when reflected at a highly mismatched end-termination, a current or voltage may double or nearly so, as the reflected portion of the wave algebraically adds to the impinging wavefront just arriving.

4.7.2 Earth electrode subsystem

The earth electrode subsystem establishes the facility earth ground reference for lightning, electrical fire, and shock hazard purposes only (i.e., safety purposes only). Signal transport processes and the internal signal processes of equipment are not benefited by this system nor connections made to it except from a safety standpoint. However, improper connection of these portions of an electronic system into an earth electrode subsystem is widely known to produce both performance, safety, and equipment damage problems under conditions of power system switching and ground-fault conditions, or lightning. Specific design criteria for the earth electrode subsystem are provided in the NEC.

The earth connection generally exhibits an increasing impedance with frequency (see Figure 4-34). This absolutely limits the effectiveness of the earth grounding electrode in relation to high-frequency "noise" control efforts. This clearly means that the earth grounding electrode system is also not an effective means of controlling the unwanted effects associated with the higher-frequency components of a lightning surge event.

From a wave-theory standpoint, the earth and the connection to it represents a serious impedance discontinuity to almost all short-duration, fast transition time impulse currents. Hence, the connection generates large reflections of both current and voltage when such waveforms are imposed on the earth grounding electrode from either the direction of the earth or the connecting GEC acting as an unbalanced transmission line. Such reflections are then propagated back into the GEC where they are spread to all items of equipment connected into it via the power system and any related equipment (safety) grounding conductor (EGC) networks.

Note that any current flow in a GEC generates large near and far fields due to the unbalanced current flow on the path and which therefore makes the GEC an EMI source. Hence, any and all current flow in a GEC is unwanted and should be avoided. For example, EMI from GEC current flow is highly likely to near-field couple into nearby victim conductors of all descriptions, or be far-field radiated into the general environment as a radio-frequency (RF) wave with the victim conductors or circuits acting as antennae. If the earth grounding electrode and its associated GEC have been galvanically connected into any signal-level circuits, then they will be directly affected by EMI current conduction, and in a highly unwanted fashion.

Copyright © 1999 IEEE. All rights reserved.

Copyright by the Institute Of Electrical & Electronics Engineers Inc
Fri Jul 20 10:35:26 2001

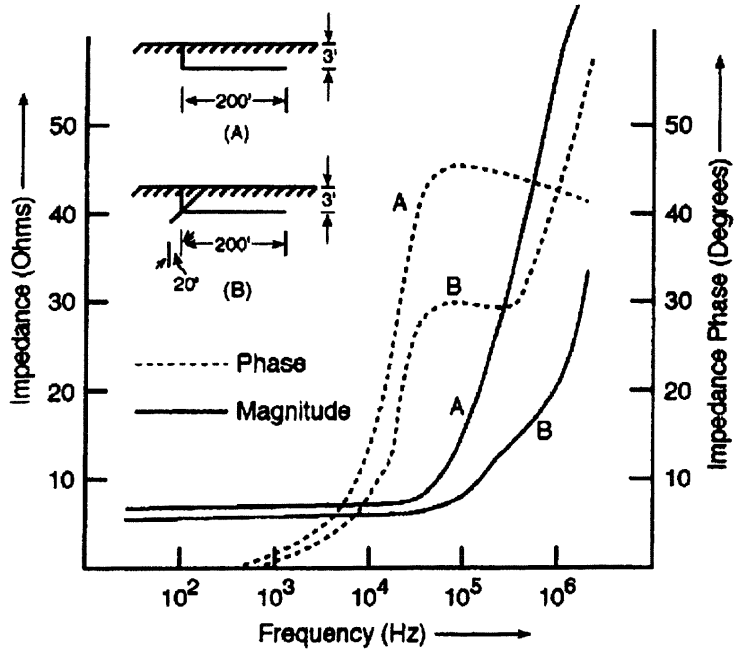

Figure 4-34—General earth grounding electrode system impedance vs. frequency using two comparative earth grounding electrode configurations, (A) and (B)

In addition to the above, the earth grounding electrode subsystem is also not generally suitable to control the harmful CM potentials that are associated with some forms of power system ground-faults. This is reflected in the NEC requirements that clearly state that the earth shall not (ever) be used as the sole path for a current flow. Instead, good grounding/bonding techniques are required as are discussed elsewhere in this chapter, and in Chapter 8 and Chapter 9.

As an example of the foregoing, a 1 Ω earth ground connection associated with a 120 V ac ground-fault, limits the current flow to no more than 120 A. This is sufficient to operate many overcurrent protective devices where (by rule of the thumb) 10 times the trip rating places the trip into the instantaneous portion of the I^2t "trip" curve. Therefore, circuits provided with overcurrent protective devices such as those in the 10–15 A range may be considered to be "protected," but only for so long as the earth grounding electrode's impedance does not upwardly change over time (unlikely). In addition and more seriously, even with the much sought-after 1 Ω value, commonly used larger-rated overcurrent protective devices may be delayed in operation or fail to operate at all on a ground-fault, and this is serious. Further, efforts to lower the ohmic value of the earth grounding electrode to unrealistically low levels as a means of compensating for the foregoing, are not normally practical and are generally unreliable. One or two orders of magnitude of improvement (e.g., from 1.0 Ω to 0.1 Ω or 0.01 Ω) would be required to be achieved, and then maintained long-term in most cases, in order to ensure reliability; this is simply not practical.

Copyright © 1999 IEEE. All rights reserved.

Copyright by the Institute Of Electrical & Electronics Engineers Inc
Fri Jul 20 10:35:27 2001

Note that in relation to the above, Section 250-84 of the NEC does not require the earth grounding electrode to possess less than 25 Ω of resistance in order to be acceptable. Also, when two or more earth grounding electrodes are installed in parallel, no measurement of the subsequent resistance of either electrode, or the combination, is required in order to be acceptable. These are both strong indications as to why an earth grounding electrode system is not as important as many think it is when installing an electrical system. Further and most importantly, none of the above discussion has included the impedance of the conductor(s) used to make the interface to the earth grounding electrode and whatever it is being connected into. This further increases the overall impedance of the arrangement with the current's frequency and often in unexpectedly large amounts. For example, there are rapid rates of increase in impedance relating to the approach or achievement of quarter-wave (and odd multiples thereof) resonance on the GEC's path.

To further illustrate the foregoing important concept, assume that a 1 Ω earth grounding electrode has been installed and that it remains 1 Ω under the given conditions. Next, assume a GEC is connected and that at some frequency the GEC exhibits a 1000 Ω impedance. The total impedance of the arrangement, as viewed from either end acting as a port, is 1001 Ω. Hence, a 1000:1 impedance ratio exists between the far end of the GEC and the earth connection, as seen at the top of the grounding electrode. This means that if only a 1 A current flows in the path, roughly 1 kV will exist between earth and the equipment connected to the far end of the GEC. With this in mind, what is the benefit of a 1 Ω earth connection from the standpoint of a CM voltage breakdown standpoint and EMI control?

Per the foregoing, the CM voltage breakdown situation is actually quite serious. Take the example of an insulated-isolated signal ground terminal located within equipment that is metal enclosed and properly connected into the ac power system's equipment (safety) grounding conductor (EGC) system. If the insulated-isolated signal ground terminal is connected into an insulated-isolated earth grounding electrode (a nonrecommended practice in all cases), then any current flow in the impedance between the power system's earth grounding electrode and the signal terminal's earth grounding electrode will produce a CM voltage between the terminal and the equipment's frame/enclosure in which it is installed. Since "signal" level wiring and components are not normally provided with other than low-voltage insulation means and minimum air-spacing from exposed terminals to the frame/enclosure are also the rule, a very real probability of voltage breakdown exists between the two (e.g., $kV_{G1-G2} = kA_{G1-G2} \cdot \Omega_{G1-G2}$ is the case with the two separate grounding systems). Thus, the signal level circuits and associated logic and signal level semi-conductors, etc., are placed into great risk by this approach, and are not benefited in any manner.

4.7.3 Grounding for fault/personnel protection subsystem

This subsystem is known within the NEC as the "equipment grounding system." This system consists of the solidly grounded/bonded together metal items comprising the frame/enclosure system for equipment, metal conduit/raceway of all types, metal cable armor/shields, bare and insulated[6] equipment (safety) grounding conductors (EGCs) that are pulled with their

[6]Typically, this conductor is referred to as the "greenwire."

Copyright © 1999 IEEE. All rights reserved.

Copyright by the Institute Of Electrical & Electronics Engineers Inc
Fri Jul 20 10:35:29 2001

associated circuit conductors, and externally applied grounding/bonding straps or jumpers, all as required or permitted by Article 250 of the NEC.

The primary purpose of the fault/personnel protection subsystem is safety. It generally has unknown characteristics regarding its impedance (vs. frequency), and it may be single-point, multiple-point, radial, or hybrid in some manner. Most often it is installed as a radial grounding system in accordance with the basic requirements of Article 250 of the NEC. In general, this subsystem has an unknown, but severely limited bandwidth. However, the NEC requires that it must be of sufficient ampacity and of sufficiently low impedance (e.g., per Section 110-10 of the NEC) at all points to effectively carry power system frequency ground-fault current in a magnitude sufficient to permit rapid operation of overcurrent protective devices, or of ground-fault interrupt (GFI) systems.

In addition, the typical wiring used to provide for this grounding system is known to be very lossy at high frequency[7] so that it does not transport high-frequency currents over distance without considerable attenuation (see Martzloff [B35]). It also only is known to be constructed for safety reasons, in a robust fashion per the NEC. The general grounding configuration for the basic fault/personnel protection subsystem is shown schematically in Figure 4-35. Note that this is not a single-point grounding system, but is a radial grounding system for the ac power branch circuits and the ac system supplying power to the shown equipment. Other grounding conductors may be connected to the equipment in various ways and for clarity are not shown in this figure.

Note that in order for the fault/personnel protection subsystem to be installed in accordance with the requirements of the NEC (unless excepted by a specific statement in the NEC), it is necessary that all of the involved equipment (safety) grounding conductors (EGCs) be routed with their associated circuit's feeder or branch circuit power conductors. This means that except for short, externally applied bonding conductors connected across very limited lengths of flexible metal conduit (FMC) or liquidtight flexible metal conduit (LTFMC), they must be run within the same cable sheath, shield, or conduit/raceway, etc., as the associated neutral and line conductors for the circuit. Specific design criteria for the EGC subsystem are provided in Article 250 of the NEC.

The typical fault/personnel protection subsystem is almost never of sufficiently low impedance to reliably prevent the unwanted development of ground-fault-related potentials (e.g., $E = IZ$) sufficient to damage electronic system components that are equipment ground referenced in some direct manner or are bypass coupled to equipment ground via low-voltage insulated components, such as capacitors and signal wiring. In addition, ground faults take clearing times that are measured in durations ranging from around 10 ms to several seconds on a 60 Hz power system. Sometimes no clearing at all takes place except by emergency manual means or after the ground fault has grown to involve more current than was initially available, etc.

[7]For purposes of this discussion, the realm of high frequency begins at approximately 100 kHz.

 Copyright © 1999 IEEE. All rights reserved.

Copyright by the Institute Of Electrical & Electronics Engineers Inc
Fri Jul 20 10:35:30 2001

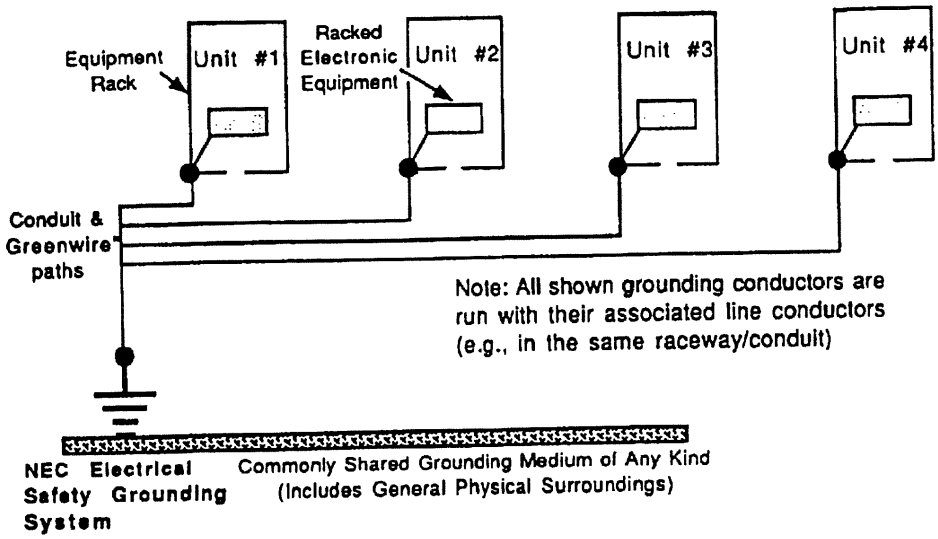

NOTE—This may be described as a radial grounding system, as opposed to an SPG system, since other equipment or ac system grounding connections (intentional or unintentional) may be involved beside the basic NEC ones shown.

Figure 4-35—NEC-compliant equipment grounding for basic fault/personnel protection subsystem

The situation concerning equipment damage, stated in the previous paragraph, is the particular case where two or more separated units are metallically interconnected via a typical signal-level data or I/O cable and a simple 15–20 A rated branch circuit ground fault occurs in the immediate vicinity of the equipment. If large ampacity branch circuits or power feeder circuits should ground-fault, such damage may also be expected to occur at points several tens of feet away from the fault's location. SRSs such as those later described in this chapter, signal reference ground planes (SRGPs), or signal reference ground grids (SRGGs) may be used in conjunction with the fault protection subsystem to eliminate, or at least minimize, this problem involving ground-fault events.

4.7.4 Introduction to SRS

An SRS is the externally installed network of conductors used to interconnect the metal frames, enclosures, and logic or signal level power supply common terminals of the subject electrical and electronic equipment to one another. This network may be a recommendation from, or an actual part of, the equipment's OEM installation package. Most often it may be part of an after-market, field-installed wiring effort. The SRS is also an integral part of any SPD network system that is used on either the ac or dc power, or signal (including telecommunications) circuits connected to the electronic equipment that is also attached to the SRS.

Copyright © 1999 IEEE. All rights reserved.

Copyright by the Institute Of Electrical & Electronics Engineers Inc
Fri Jul 20 10:35:31 2001

The SRS is also not intended to be dielectrically or galvanically insulated or isolated from the building electrical system's equipment (safety) grounding conductor (EGC) system that is part of the fault/personnel protection grounding subsystem.

The principal purpose of the SRS is threefold. It is intended

— To enhance the reliability of signal transfer between interconnected items of equipment by reducing inter-unit CM electrical "noise" over a broad band of frequency;

— To prevent damage to inter-unit signal circuits by providing a low-inductance, and hence, effective ground reference for all of the externally installed ac and dc power, telecommunications, or other signal level, line-to-ground/chassis-connected SPD equipment that may be used with the associated equipment;

— To prevent or minimize damage to inter-unit signal-level circuits and equipment power supplies when a power system ground-fault event occurs.

The particular nature of the digital system grounding problem is that unlike analog systems, or other narrow and limited bandwidth equipment designs, short-duration, fast-transition time impulses related to the desired signal processes or interference to them, are propagated along discrete conductors that comprise the usual grounding paths existing between elements of a logically interconnected system. These paths include

— The NEC-described power system's equipment (safety) grounding conductor (EGC) system; and

— Any field-installed grounding/bonding jumpers or straps connected between units in whatever fashion (e.g., SPG, MPG, "daisy-chain," and "radial").

The typical grounding systems as described above, are not generally suitable for use with currents above a few tens of kHz. Therefore, the typical results obtained from misusing them in this manner (e.g., for digital system process grounding) will range from marginally unreliable to the totally unworkable.

The foregoing limitations assigned to the indicated grounding system types are generally due to the typically high overall impedances, impedance discontinuities at junctions and splices (important when considering the grounding path as a transmission line), and excessive high-frequency losses that they present to impulses along the subject path.

The need for an SRS is minimal when all of the inter-unit signal-level and telecommunication circuits are interfaced to the associated electronic equipment via optically or isolation transformer coupled means, and where these interfaces have good CM voltage breakdown characteristics.

 Copyright © 1999 IEEE. All rights reserved.

Copyright by the Institute Of Electrical & Electronics Engineers Inc
Fri Jul 20 10:35:32 2001

However, the need for an SRS may easily rise to that of a requirement in the event any of the following three conditions are established:

— When the logic ac-dc power supplies used in the associated electronic equipment are installed with one of the terminals (e.g., the "common") connected to the equipment's metal frame/enclosure. This is typical and recommended practice in the commercial information technology equipment (ITE) and electrical business equipment industries, and others as well;

— When the signal-level circuits and logic ac-dc power supply common terminals are OEM dielectrically insulated or galvanically isolated from equipment ground against recommended practice, and are instead connected to an insulated "ground" terminal that is intended for connection to an externally installed signal ground reference circuit;

— There are actual performance problems occurring with the equipment, which can be assigned to CM electrical "noise" or similar CM interference related to the equipment's existing grounding system, whatever its design, or to the signal-level, inter-unit cabling system.

4.7.4.1 Single-point grounding

Figure 4-36 shows an electronic system to which a supplementary grounding system has been attached. Figure 4-36 is developed from Figure 4-35 by adding the shown supplementary grounding conductors and related earth ground. The arrangement in Figure 4-36 is NEC compliant, but is likely to also be electrically "noisy." The grounding shown in Figure 4-36 is also not in any recognizable form of SPG, but serves to lead one to the idea of how to unwisely and unsafely modify it to obtain a true SPG configuration as is shown in Figure 4-37. Furthermore, Figure 4-36 represents a very poor EMC practice because of the cabinet penetration by the supplementary grounding conductors.

Non-NEC-compliant SPG designs, such as the basic one shown in Figure 4-37, are sometimes employed as an intended means of "avoiding" whatever "noise" problems that are perceived to exist with the use of the NEC-compliant-style equipment (safety) grounding system as shown in Figure 4-35 and Figure 4-36. These non-NEC-compliant designs, however, are not suitable for use in the digital signal and system environment for similar reasons to those discussed in 4.7.4. In addition, almost all attempts to implement SPG designs most often create serious (and often subtle) electrical safety conflicts with both the requirements of the NEC and the electrical safety requirements of NRTL-listed equipment. Note that the electrical installation and operation requirements for NRTL-listed equipment require compatibility with the NEC's requirements for equipment (safety) grounding. Typically, these kinds of problems occur when ac or dc powered equipment or related signal circuits are dielectrically isolated or otherwise galvanically insulated from the ac power system's equipment (safety) grounding conductor (EGC) system as described in the NEC.

Copyright © 1999 IEEE. All rights reserved.

Copyright by the Institute Of Electrical & Electronics Engineers Inc
Fri Jul 20 10:35:33 2001

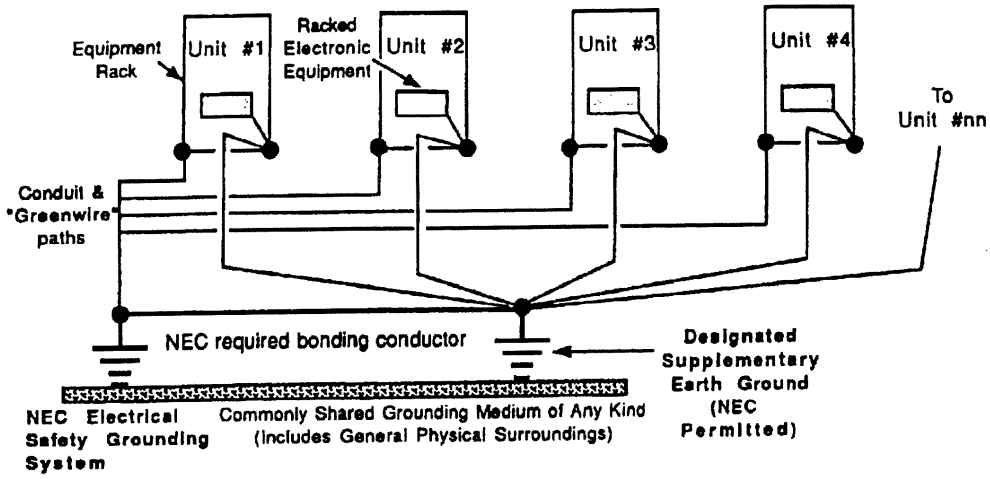

Figure 4-36—(NEC compliant) Equipment and system grounding employing a supplementary grounding system consisting of an interconnected second electrode at its associated grounding conductors

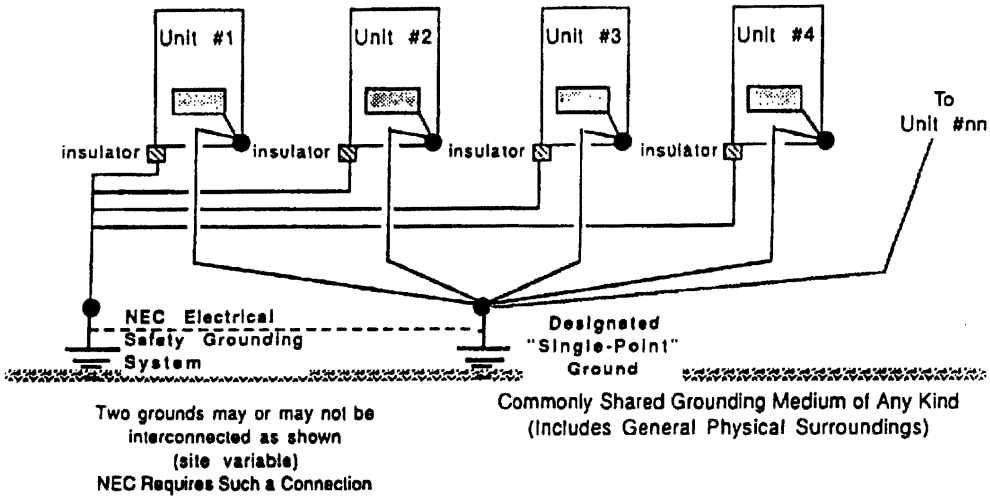

Figure 4-37—(Not NEC compliant) General configuration of an SPG design used with equipment being powered from building ac supply

Copyright © 1999 IEEE. All rights reserved.

Copyright by the Institute Of Electrical & Electronics Engineers Inc
Fri Jul 20 10:35:34 2001

The design shown in Figure 4-37 does not meet NEC requirements because of the disrupted equipment grounding paths in branch circuits at the point of connection to the load equipment. This design is especially vulnerable to lightning and ground fault current damage, and is generally "noisy" as well.

Note that if LC filters are employed within the equipment, as shown in Figure 4-38 (a variation on Figure 4-37), then the presence of the line-to-ground connected "shunt" capacitors will cause the equipment frames to be elevated in potential due to leakage and conduction currents through them. This represents a ground-fault problem when one of these capacitors fails short. In addition, normally available power supply generated harmonic and other impulse currents passed through these capacitors to "ground" actually makes the resulting ground "reference" noisy in a way just opposite to that intended by the designer.

For example, even when there is a designer's awareness of the need to provide ground-fault current paths there is still an inherent conflict between the design requirements of the typical SPG system and the NEC, in that the resulting SPG design typically provides for all of the grounding and bonding conductors to be installed externally and separately from the equipment (safety) grounding conductors (EGCs) that would normally be installed within the same conduit/raceway as the associated power circuit conductors under NEC requirements. This is shown in Figure 4-39.

Also, if both the SPG and NEC EGC conductors are connected to the same points at equipment level, then the wished for performance of the SPG design philosophy is totally compromised by the myriad paths provided to "ground" via the EGC system in the form of a "ground-loop." Hence, there is a typical pressure brought to bear in such a situation that allows for the SPG conductors to be installed as shown and for the NEC-required EGC conductors to be either left out, disconnected, or misconnected so as to preserve the philosophically based purity of the SPG design. The general result is a lack of a good ground-fault protection subsystem, and a concurrent and serious electrical safety problem.

Also, and in opposition to the typically stated reasons for the SPG design in the first place, there clearly exists a lowered level of reliability for the involved electronic equipment (e.g., computers, process control, and telephone digital-logic-based switching equipment) due to the inherent high impedance presented by the SPG design to HF currents such as "noise" impulses. This occurs since as stated in 4.5.3, it is almost always a large circuit that must be analyzed using HF wave-transmission line theory and not LF circuit theory.

Copyright © 1999 IEEE. All rights reserved.

Copyright by the Institute Of Electrical & Electronics Engineers Inc
Fri Jul 20 10:35:35 2001

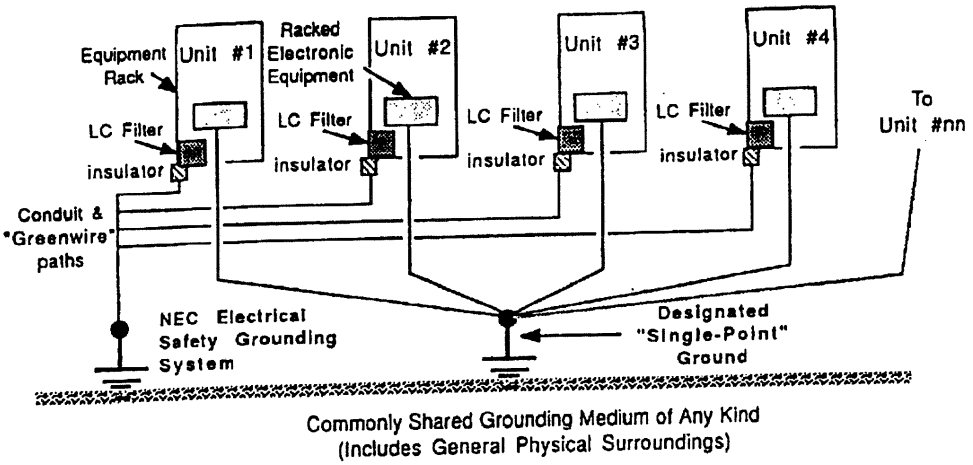

Figure 4-38—(Not NEC compliant) Variation of the SPG design of Figure 4-37 where LC filters are employed on the branch circuit interface to the equipment

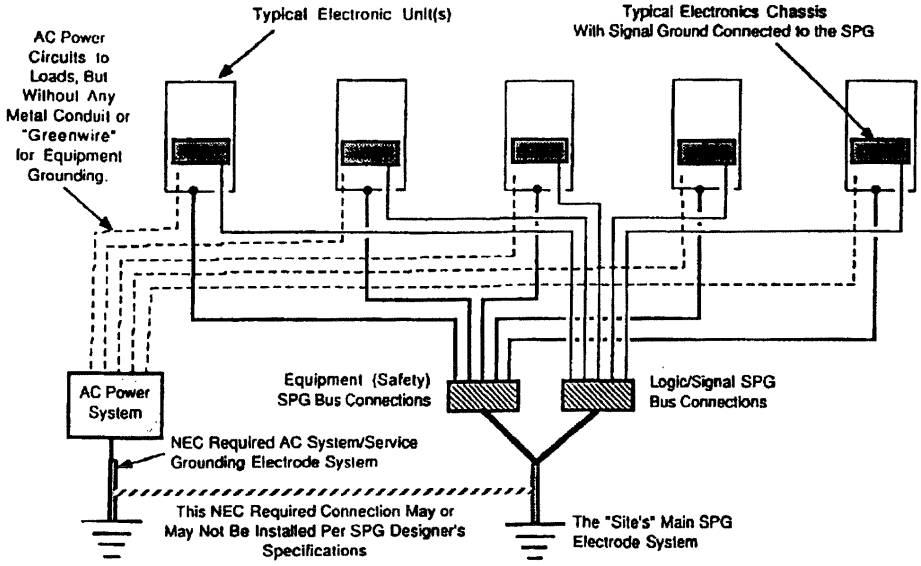

Figure 4-39—(Not NEC compliant) General configuration where an SPG design is employed and where the ac power system's ground-fault path has been implemented exclusively via externally applied EGCs in violation of the NEC

Copyright © 1999 IEEE. All rights reserved.

Copyright by the Institute Of Electrical & Electronics Engineers Inc
Fri Jul 20 10:35:36 2001

Therefore, the NEC-described EGC system and SPG designs should not be used to provide a high-frequency or signal reference for digital electronics-based equipment of almost any kind. Instead, as recommended practice, a modern SRS system design, as described beginning in 4.7.4.3, should be employed.

With great care, the SPG design can be used successfully where large-scale dc power distribution of some sort is the case, such as with the nominal 48 V dc power for a telephone network and its associated switching equipment and dc power plant such as described in Chapter 9. In this case, the purpose is actually to prevent dc currents from flowing in the metallic portions of the building's structural building steel and piping or conduit systems. This is important to do since such a current flow will cause serious electrolytic corrosion over time and a general weakening of such structures to the point of failure where the corrosion occurs. Note that in this singular case the SPG design is only used and is effective in the LF regime as a dc system ground reference and fault path. It cannot be used in the HF regime as some type of "noise" control grounding system, where it would be totally unsuitable, as this is inherently a large circuit where wave-transmission line theory must be applied, and not circuit theory.

The SPG design is typically employed in facilities dedicated to the national telecommunications network and under the exclusive control of the serving telecommunications utility.[8] Under this scenario, the NEC provides a very specific and limited exemption from the requirements of Article 250, and several other areas of NEC concern for the telephone equipment's installation. Importantly, these NEC exemptions are not applicable in government, private, commercial, or industrial facilities in which telephone switching equipment may be installed and be powered from the NEC-controlled building power system. This means that what the telecommunications utility does with its equipment that is installed within its own facility is one thing, but if an NEC violation would occur in some other facility where equipment would be installed, the utility or other entity cannot make the installation without careful conformance with the NEC.

The foregoing leads to the inescapable observation that telephone, telecommunications, or other electrically operated equipment must be OEM produced and certified to be reliably operable when installed, and especially when grounded, per the requirements of the NEC. Otherwise, the equipment is not suitable for use from a safety, performance, or both standpoints and should not be installed. Such a view is also supported by the requirements involved in installing NRTL-listed equipment—and it is now NEC required that telephone and telecommunications equipment be so listed.

---

[8]See Section 90-2 of the NEC, Scope, (b) Not Covered. This code does not cover:

(4) Installations of communications equipment under the exclusive control of communications utilities located outdoors or in building spaces used exclusively for such installations.

Copyright © 1999 IEEE. All rights reserved.

Copyright by the Institute Of Electrical & Electronics Engineers Inc
Fri Jul 20 10:35:37 2001

4.7.4.2 TREE configuration grounding

A variation on the SPG design described in 4.7.4.1 is the TREE configuration as shown in Figure 4-40. This is a grounding system design that generally takes several SPG common points and collects them as branches on a central grounding-conductor trunk in a design that looks much like a tree with branches. This is a sometimes popular design in buildings where there are multiple floors and areas, all of which contain separate groups of equipment and where there is a believed need to be referenced to a single, central grounding point. This is a generally erroneous view since such a remotely located and singular reference point for an electrically large circuit is not possible to create and effectively operate where HF current conditions are in existence as described in 4.5.3. Therefore, as with the SPG design, the TREE is almost always a large circuit that must be analyzed using HF wave-transmission line theory and not LF circuit theory.

Such a general configuration as the TREE may vary widely in configuration and the design is typically found in telecommunications-dedicated facilities where large dc power plants and telephone switching systems are employed together. When configured as part of an SPG based on Figure 4-37 or Figure 4-38, it will be non-NEC compliant.

A variation on the TREE design where the equipment is referenced to both a signal TREE ground-reference system and an equivalent design that is normally the result of the typical feeder, panelboard, and branch circuit wiring used to distribute the power in the building and to the equipment that is connected into the signal grounding TREE. A typical example of this is shown in Figure 4-41 where the ac power system's grounding TREE is composed of the combination of metal conduit/raceway and equipment (safety) grounding conductor (EGC) system, such as is provided by either an SG or IG "greenwire" installation.

Note that in Figure 4-41 a fire and shock hazard situation exists due to the impedance that may exist between the two electrodes used to reference the two systems, and due to the insulation/isolation that exists within the served equipment where the enclosure and "electronics" contained within it are to be kept insulated/isolated from one another because of "noise" concerns. This hazard exists when a current flow in the commonly shared ground reference medium (e.g., earth, structural steel, and piping system) causes an IZ drop or $L\,(di/dt)$ related voltage to be developed across the intervening impedance. Under conditions such as from a lightning strike, arcing, as shown in Figure 4-41, can occur within the equipment.

Copyright © 1999 IEEE. All rights reserved.

Copyright by the Institute Of Electrical & Electronics Engineers Inc
Fri Jul 20 10:35:38 2001

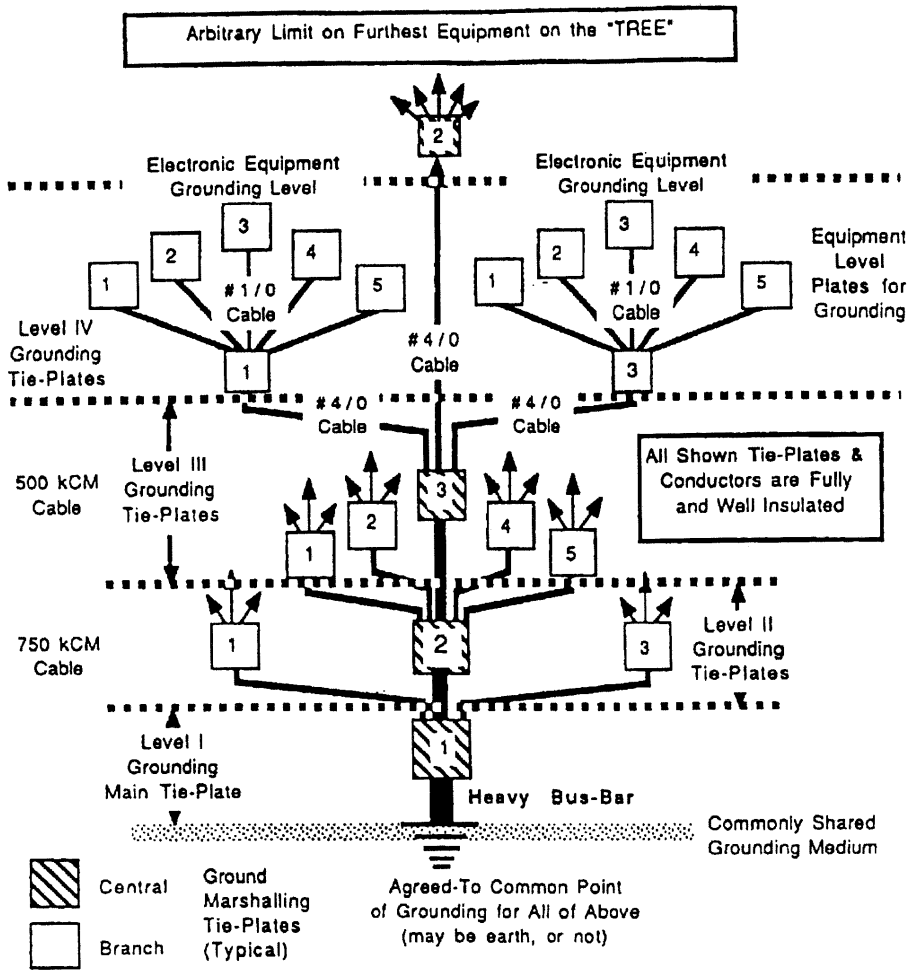

Figure 4-40—(Typically not NEC compliant) Macro view of the basic dc (LF TREE grounding system as shown in Figure 4-39)

Copyright © 1999 IEEE. All rights reserved.

Copyright by the Institute Of Electrical & Electronics Engineers Inc
Fri Jul 20 10:35:38 2001

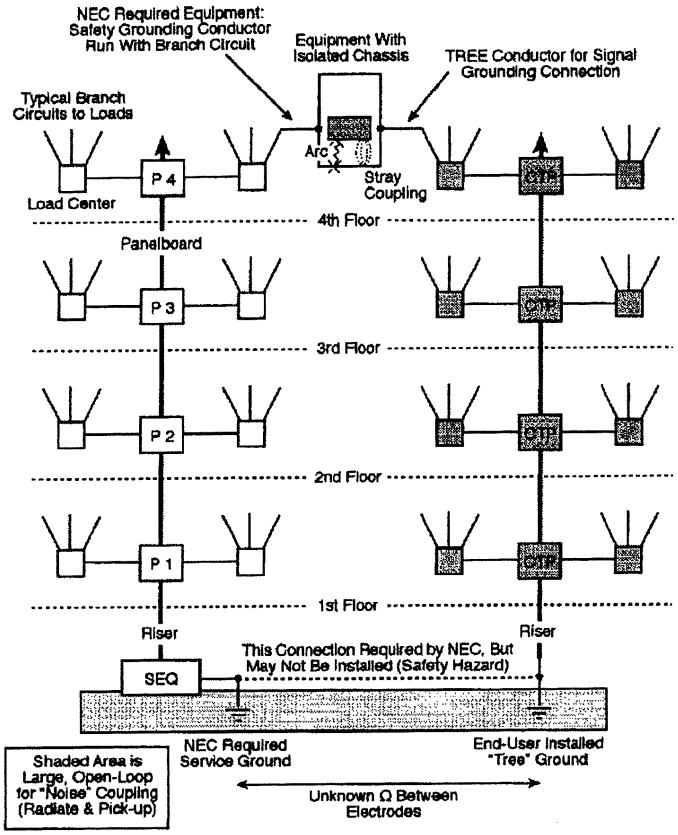

Figure 4-41—Interconnections between the TREE grounding system and the typical NEC compliant ac system, feeder, and branch circuit equipment grounding structures for the electronic equipment

Copyright © 1999 IEEE. All rights reserved.

Copyright by the Institute Of Electrical & Electronics Engineers Inc
Fri Jul 20 10:35:40 2001

4.7.4.3 Modern SRS

Any grounding system that employs long ground conductors, as generally illustrated in Figure 4-42, will exhibit higher impedances at higher frequencies and in general this is most undesirable. The impedance in the grounding paths are basically uncontrolled and usually very high at frequencies above a few kHz. Therefore, useful SRSs require the existence of a grounding structure that most nearly mimics the ideal of an equipotential ground plane throughout the frequency range of interest (often from dc to several tens of MHz). Such a design is shown very generally and in schematic form in Figure 4-43.

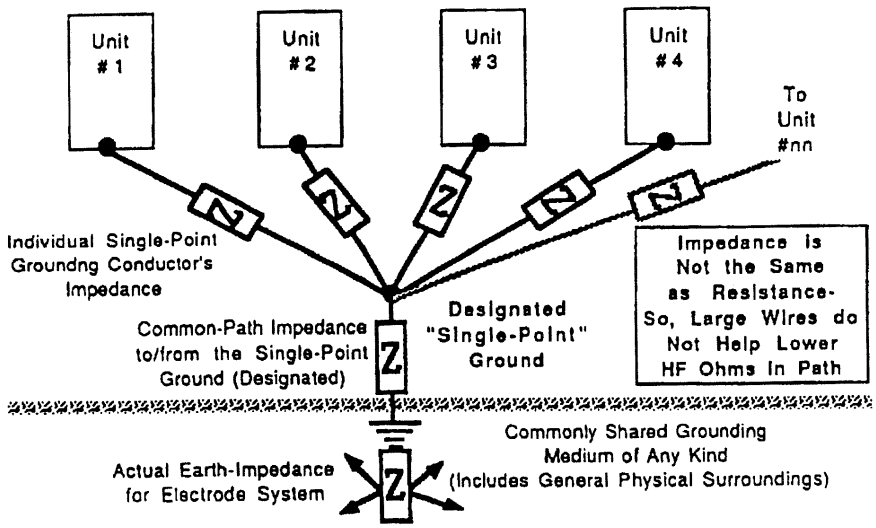

Figure 4-42—Typical $Z = R \pm jX$ impedance values

The foregoing requirements can be practically met by use of an SRS in the form of a signal reference ground plane (SRGP) or signal reference ground grid (SRGG) that is grounded/bonded to the associated electrical and electronic equipment via direct means (ideal) or more likely in practice, by many and multiple physically short length and low-inductance design grounding/bonding straps. The typical result is a practical and good-performing grounding system of broadband character that is quite compatible with modern telecommunications and other digital-signal-based forms of equipment, such as computers and other ITE. It is also a grounding system design that is not known to create safety conflicts with the NEC and related NRTL-listed equipment installation requirements.

Copyright © 1999 IEEE. All rights reserved.

Copyright by the Institute Of Electrical & Electronics Engineers Inc
Fri Jul 20 10:35:42 2001

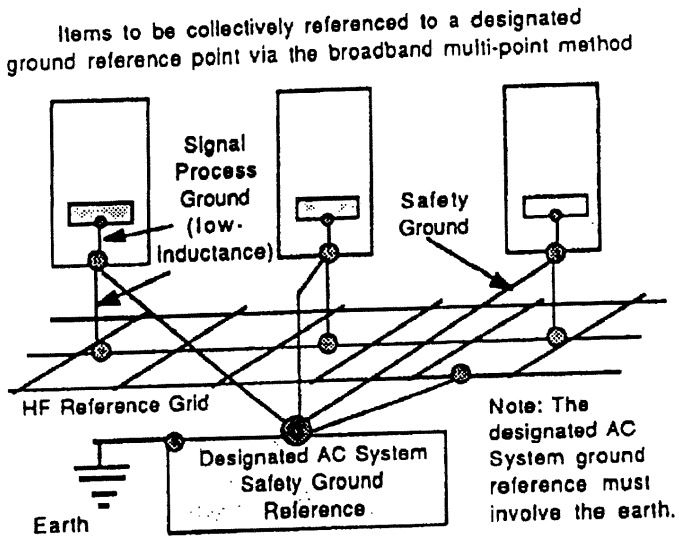

Figure 4-43—Recommended practice (simplified diagram) for dc—HF grounding of electronic systems powered from building ac power system

4.7.4.3.1 Signal reference structure (SRS) frequency requirements

SRSs are generally required to operate effectively over a broad range of frequency from dc to several tens of MHz. This requirement generally precludes the use of the foregoing SPG and TREE forms of grounding, and it places some constraints on the recommended practice SRS methods that are actually used.

Surges having high-frequency components require current return paths that are of low impedance over the same range of frequency that the surge contains. Otherwise, an interfering or damaging potential may be developed across the high impedance presented at one or more of the frequencies it contains, and which will then affect the connected equipment. Therefore, signal reference grounding systems, which provide the required low-impedance return paths, must be designed for low-impedance characteristics over large frequency ranges, e.g., dc to tens of megahertz. These are correctly referred to as broadband grounding systems.

Figure 4-44 shows the residual voltage vs. conduction bandwidth for the IEEE Std C62.41-1991 100 kHz ring wave. This waveform is selected to show that such a commonly occurring surge possesses several hundred volts at frequencies greater than 1 MHz. Surge amplitudes of the order of 100 V_{peak} are known to be destructive in digital circuits; therefore, the signal reference grounding system must exhibit low impedances at frequencies >10 MHz. The upper frequency limit of practical interest (today) for most commercial equipment is considered to be in the range of 25 MHz to 30 MHz.

Copyright © 1999 IEEE. All rights reserved.

Copyright by the Institute Of Electrical & Electronics Engineers Inc
Fri Jul 20 10:35:43 2001

An example where an EGC "greenwire" only grounded system was compared to one grounded by broadband means where both "greenwires" and an SRGG [0.6 m × 0.6 m (2 ft × 2 ft)] are employed in parallel, are compared in Figure 4-45 (see FIPS Pub 94-1983). While this test did not go beyond 7.0 MHz, it well illustrates the example if one extrapolates it.

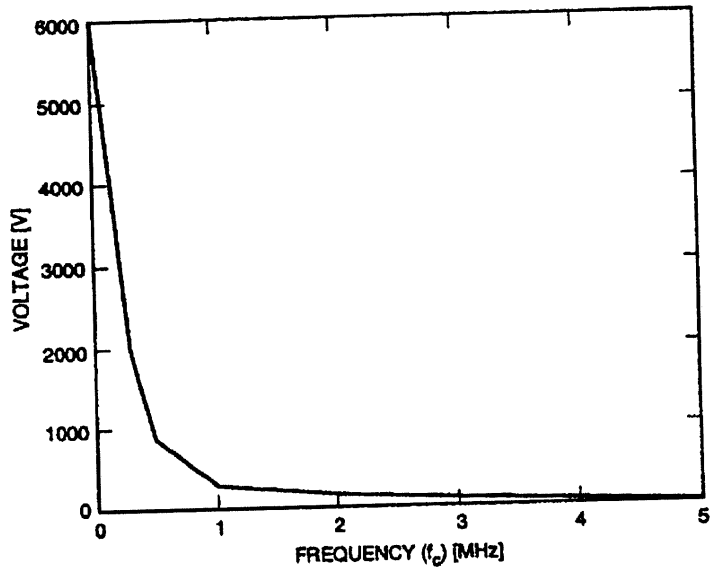

Figure 4-44—Residual surge voltage vs. frequency for 100 kHz ring wave

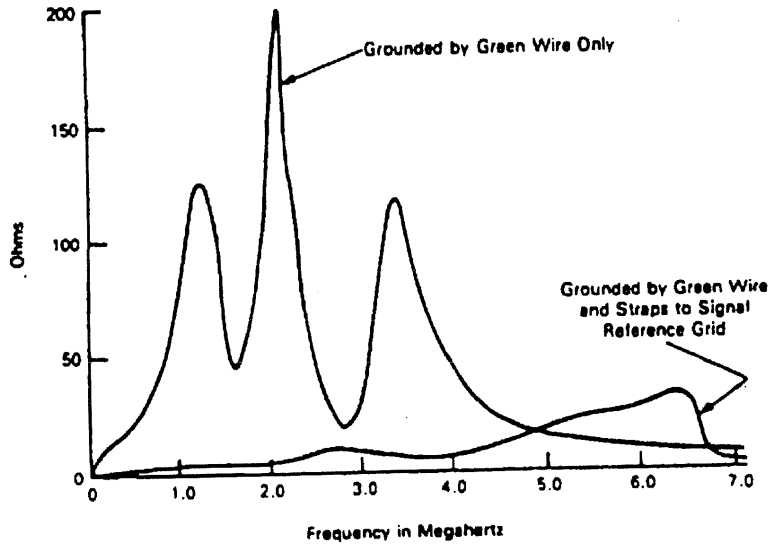

Figure 4-45—Impedance of grounding conductors for a computer system

Copyright © 1999 IEEE. All rights reserved.

Copyright by the Institute Of Electrical & Electronics Engineers Inc
Fri Jul 20 10:35:44 2001

4.7.4.3.1.1 SPG, TREE, and SRS design bandwidths compared

In general, the SPG and TREE designs are known to be useful for grounding analog-signal based equipment that operates with slow dc signal level transition times, relatively low frequency continuous-wave (CW) signals, and with very limited bandpass. For example, narrow bandpass characteristics might be those that range from dc to about 30 kHz or a little beyond. However, if the electrical dimensions of the SPG or TREE grounding subsystems in these cases are kept modest by using a compact design, the effective upper frequency range and signal bandpass may sometimes be extended by an order of magnitude to about 300 kHz. Since 300 kHz is still a relatively low frequency in respect to the typical signal transition times and related bandwidths for signal circuits, as found in modern digital logic and signal-based equipment, both the SPG and TREE designs are almost always totally unsuitable for use with these kinds of equipment.

Note that the SPG and TREE designs are useful where ac power system fundamental and harmonic currents flowing in the grounding system generate "noise" that can truly interfere with the operation of limited bandwidth equipment,[9] such as for analog data acquisition and control systems and where no digital-based equipment is also being operated on the same grounding system at the same time.

Beyond 300 kHz the SPG and TREE designs are almost always totally unsuitable for use in any application since they are almost always large circuits in relation to the currents that flow in and on them (see 4.3.3). Therefore, circuit theory is not useful in analyzing them and wave-transmission line theory must be used. For example, even if the signal processes have restricted bandwidth, electrical "noise" and surge phenomena that can appear on the SPG or TREE grounding system are not so limited and may have very fast transition time, large amplitude, and from short to fairly long duration. Thus, EMI that can cause problems ranging from interference with equipment's operation to actual electrical damage to it cannot be reliably controlled by the typical SPG or TREE grounding subsystem.

Digital signal and logic-based equipment with high-frequency bandpass requirements that range from dc to above 300 kHz require a compatible signal grounding subsystem to be used with them in order to obtain best reliability. This can only be accomplished via wide bandpass, modern SRS methods such as are provided by the signal reference ground plane (SRGP) or signal reference ground grid (SRGG) and related low-inductance multipoint grounding/bonding jumper techniques.

Where both low-frequency analog signal-based equipment and high-frequency digital signal- and logic-based equipment are used simultaneously within the same electronic system, only one form of SRS can be implemented and it must be the one most compatible with both forms of system requirements— and the NEC described equipment grounding system. Since the modern SRGP or SRGG is a broadband grounding system whose useful operating range overlaps and far exceeds that of the SPG or TREE designs, and as it does not conflict with

[9]This is not a likely problem with digital-signal and logic-based equipment that operates with a fast transition time on the signals (e.g., over 300 kHz). This is due to the impedance transfer function of the involved circuits and the fact that most of the subject circuits have bandpass characteristics that are not very, or are not at all, responsive to such low frequencies.

Copyright © 1999 IEEE. All rights reserved.

Copyright by the Institute Of Electrical & Electronics Engineers Inc
Fri Jul 20 10:35:44 2001

NEC requirements, it becomes the de facto design requirement in these cases. It is therefore recommended practice.

A useful discussion of the foregoing subject is presented in MIL-STD-188-124A [B42].

4.7.4.3.1.2 Ground mapping

Ground mapping is a diagnostic and maintenance function almost exclusively carried out in relation to SPG and TREE grounding subsystems by the telecommunications industry. Typically, this is a procedure where each grounding conductor associated with the SPG or TREE subsystems and the main grounding conductors going back to the main earth grounding electrode are monitored for current flow conditions. Whatever the conditions, they are then logged for both future reference and for an immediate use in whatever diagnostic or troubleshooting effort may be underway. Of particular interest in these efforts are changes in comparison to previous trends or especially static current conditions that have been prior logged.

The typical instrumentation used in conjunction with the ground-mapping effort is hand-held, clamp-on current probe types of instruments. Older equipment was useful for ac only and with a limited bandwidth up to about 1 kHz. More modern instruments have extended this range into the dc level (e.g., via Hall-effect transducers) and up to a few tens of kHz. Preferred instruments are true-RMS reading and indicating as opposed to RMS calibrated, average actuated meters, but these are not in universal use for this application at this time. Peak reading meters sometimes are also useful.

The typical ground-mapping effort using the tools above is not suitable to determine the current flow and "noise" conditions on the typical SPG or TREE grounding subsystem and related conductors that might be currently used with digital signal-based equipment. This is the specific case where these subsystems are in use with digital signal-based equipment such as telephone electronic switching systems (ESS), computers or ITE, process control, or similar equipment operating with impulse types of signal processes. In these latter cases, only HF instrumentation can be used, which can capture an impulse or a travelling wavefront event for later examination, etc.

The ground-mapping effort using the typical hand-held clamp-on current indicators is useful to detect unwanted leakage of ac and fault currents related to the power system, and emanating from poor insulation, leakage, and other continuous currents from line-to-ground/chassis-connected circuit elements (e.g., such as filter capacitors, and MOVs and other SPDs), or misconnections. These test-equipment items are also especially useful to detect the unwanted flow of dc in interconnecting signal cables between units, and the SPG or TREE grounding system's conductors. These are currents that should not normally be present at all, or may be present only if balanced or distributed in some fashion according to OEM specifications, etc. This latter situation is very important if, for example, electrolytic corrosion (e.g., electrolysis) is to be prevented in the related building's metallic systems—especially the structural building steel system, or flammable gas piping.

The readings obtained during the ground-mapping effort may generally be relied upon when the issue is dc. However, when ac is being considered, coupling paths must be allowed for

Copyright © 1999 IEEE. All rights reserved.

Copyright by the Institute Of Electrical & Electronics Engineers Inc
Fri Jul 20 10:35:46 2001

and the failure to do this often leads to a misdiagnosis of where an ac is "coming from" and where it is "going." The ground-mapping effort typically looks at the SPG or TREE grounding subsystems much like a water piping system in which there is no other way except via the "pipe" for current to flow in the pathways. This is erroneous since a great deal of leakage current can be seen to flow in these systems as a result of reactively coupled currents in the power system's fundamental and harmonic current ranges. Hence, a current can be seen to flow in a conductor being examined, but which can be shown to have only one point of galvanic connection to anything else. This is baffling since without understanding of the coupled paths the "ground loop" is inferred, but cannot be found.

Copyright by the Institute Of Electrical & Electronics Engineers Inc
Fri Jul 20 10:35:47 2001

Copyright by the Institute Of Electrical & Electronics Engineers Inc
Fri Jul 20 10:35:48 2001

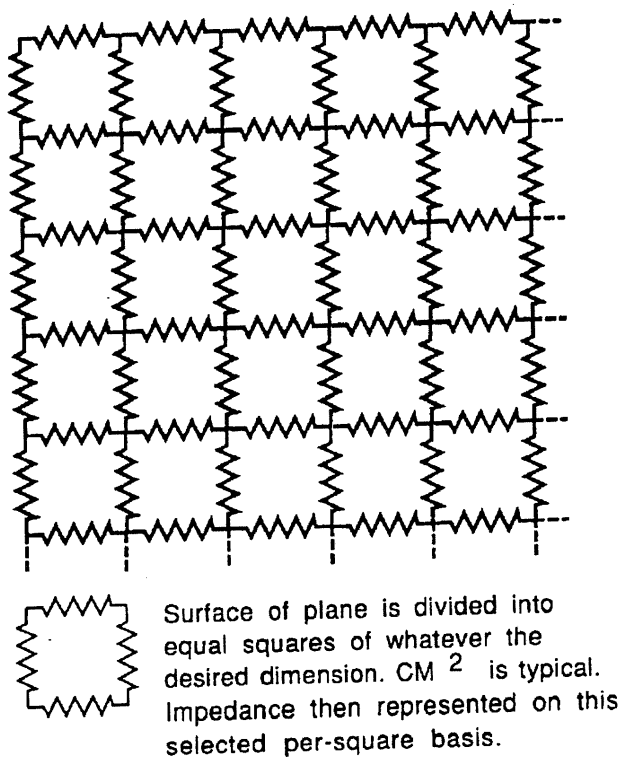

Figure 4-46—General view of the impedance of an SRP considering its impedance using the ohms-per-square method

For transient currents (e.g., faults and noise) injected into the SRP and that are considered using low-frequency circuit analysis techniques, the impedance presented by the design is more like that of a nearly infinite number of junctions with a somewhat uniform surge impedance Z_0 for each. This allows for the current to flow in these paths between the injection point and to any number of exit points for the current to make its return from. Hence, currents through the SRP in amperes are quickly dispersed from an injection point with milliohms of resistance into numerous other junctions, each also of milliohms of resistance. This causes injected amperes to be quickly reduced to mA, and mA to μA, and so on, as shown in Figure 4-47, as the current moves through the plane's junctions to the exit point(s). This significantly minimizes the voltage drop that can be developed between any two points of the SRP due to the small amount of current that can flow though whatever the impedance of the path is between these points.

In the same manner as current density in the SRP is reduced as the current moves away from the injection point, the current can be reconcentrated as it approaches a singular exit point for return. This clearly implies that sensitive equipment referenced to the SRP will be subject to less interference when it is located on and grounded/bonded to/from the SRP at a point separated from either an injection or exit/return current point. In practice, this simply means that

Copyright © 1999 IEEE. All rights reserved.

Copyright by the Institute Of Electrical & Electronics Engineers Inc
Fri Jul 20 10:35:48 2001

the electronic equipment should be kept away from the perimeter of the SRP and any penetrations of it by metallic items likely to act as current injection or return points. A meter or so of separation is sufficient in most cases.

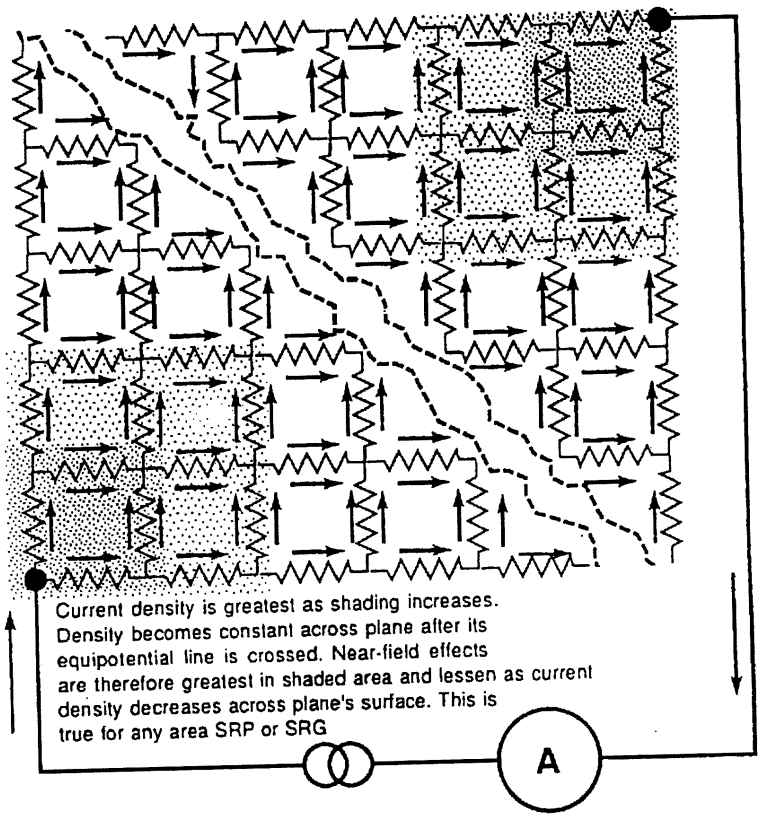

Figure 4-47—General configuration of an injected and return current flow through an SRP considering its impedance using the ohms-per-square method

Note that as the current density is reduced as it progressively moves through greater area on the SRP, there is a concurrent reduction in near-field effects, especially the H field, which is directly related to the amplitude of the current producing the magnetic field. This is a near-field phenomena that is often most troublesome at power system fundamental and harmonically related frequencies through several tens of kHz (especially during ground faults). This highly beneficial effect therefore means less unwanted H-field coupled EMI into nearby, parallel-routed signal-level cables and other grounding/bonding straps, etc. This occurs as there is only a finite amount of injected and concentrated current at one point, which must then be divided-up and therefore become less concentrated as current flow occurs into greater, and still greater SRP area.

Copyright © 1999 IEEE. All rights reserved.

Copyright by the Institute Of Electrical & Electronics Engineers Inc
Fri Jul 20 10:35:49 2001

The electrical and grounding system's "build-up" is shown in Figure 4-48 and Figure 4-49 where the overall relationship between the load equipment and ac power system's equipment and ac system grounding is shown in Figure 4-48, and where the recommended signal reference system is then added as shown in Figure 4-49. As can be seen, the two are connected in intimate electromechanical parallel and are not isolated or insulated from one another in any way.

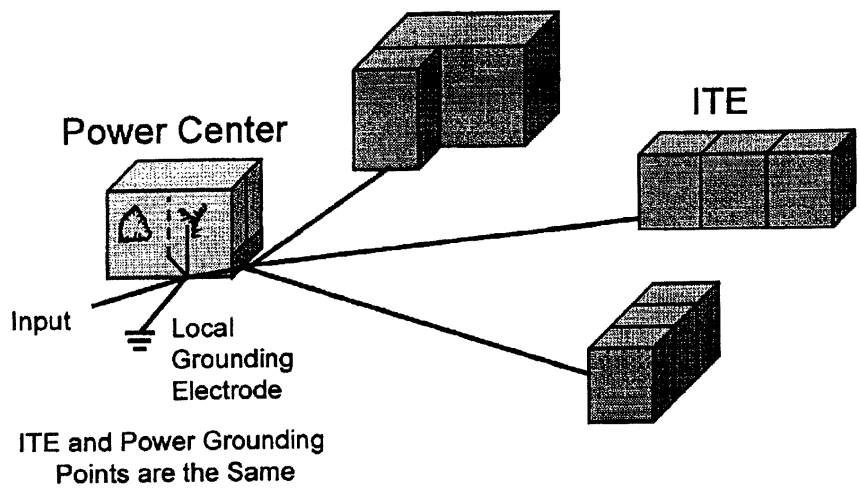

Figure 4-48—Electronic system grounded by ac power safety grounding subsystem only as a radial grounding design using the ac system as the "hub"

4.7.4.3.3.1 The SRGP at higher frequencies

At higher current frequencies, where wave-transmission line theory must be used to explain the action of the SRGP, a slightly different view must be taken from the one given in 4.7.4.3.3. This mostly occurs due to the large circuit characteristics that the SRGP now exhibits so the effects of path resonance within the SRGP must be considered. In these cases it must be understood that for each current flow path within the SRGP that appears as a quarter-wave (or odd multiple thereof) resonant path, there will also be a multitude of nonresonant or half-wave (or even multiple thereof) resonant parallel paths provided. These act to shunt the high-impedance path that a quarter-wave (or odd multiple thereof), may present between any two most direct points on the SRGP. Hence, even when the effects of resonance within the SRGP are allowed for, the overall impedance between any two points on the SRGP may be significantly lower than one might otherwise expect.

The impedances presented by an SRGP to any current in a frequency range where the SRGP appears as a small circuit provide an infinite number of parallel paths for current flow in the plane. The combination of these paths results in very low current densities in any area on the plane. Low current densities throughout the plane imply equally low voltage drops throughout the plane.

Copyright © 1999 IEEE. All rights reserved.

Copyright by the Institute Of Electrical & Electronics Engineers Inc
Fri Jul 20 10:35:50 2001

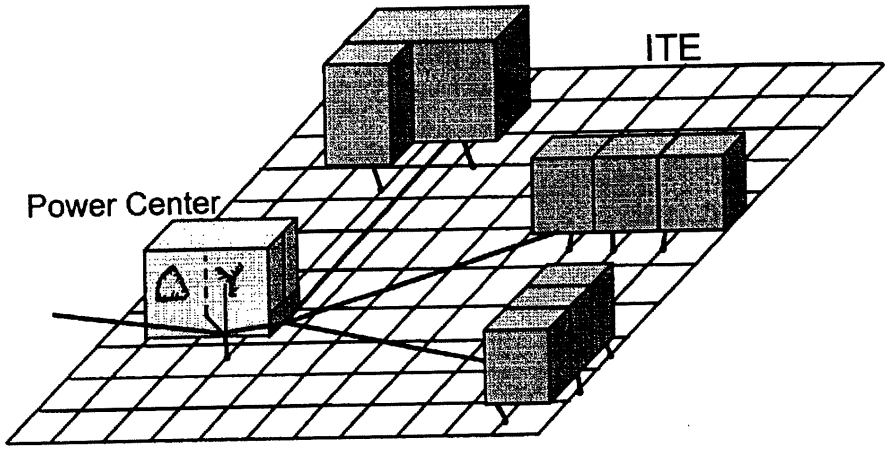

Figure 4-49—Recommended practice of a combined safety and SRG subsystem employing a plane or grid structure as permitted by the site's construction requirements

Therefore, externally applied SRSs, with internally constructed equipotential ground plane structures (e.g., as provided at circuit board level), provide the overall best approach to true equipotential signal-grounding means available. This is the typical case as when signal frequencies range from dc to several tens of megahertz, since the use of the combined approach ensures that minimal CM voltage variances exist among the connected signal circuits and interconnected equipment.

4.7.4.3.4 Signal reference ground grids (SRGG)

The SRGG is closely related to the SRGP in that, up until its waveguide beyond cutoff frequency is reached, it behaves almost exactly as does the SRGP. The SRGG may generally be thought of as being an SRGP that has "holes" in its surface where the hole's perimeter conductor's dimensions describe the cutoff frequency above which the SRGG quickly begins to lose its effectiveness in comparison to an SRGP. The foregoing information and figures in this chapter on the SRGP therefore generally apply to the SRGG with the noted difference.

An everyday example of an SRGG may typically be seen in the transparent window located in the front of most microwave ovens and where an SRGG has been either imbedded or applied to the inner surface of the window's material. Here the SRGG is being used as a shield and the spacings between the grid elements have been chosen to be a small fraction of a wavelength to the microwave energy. This allows the grid to act as an effective barrier to its escape, but light is passed with little attenuation due to its much shorter wavelength. The light is transmitted past the cutoff point, while the microwave energy "sees" the SRGG in the window as almost the same thing as a solidly filled metal shield.

Copyright © 1999 IEEE. All rights reserved.

Copyright by the Institute Of Electrical & Electronics Engineers Inc
Fri Jul 20 10:35:52 2001

Practical SRGG assemblies in facilities therefore have a limited upper frequency beyond which they do not function very well as compared to solid form SRGP assemblies. However, the SRGG is typically much more cost-effective and practical to install as a room- or facility-level means of signal reference grounding subsystem compared to a solid form SRGP.

Typically, an SRGG will be installed using a conductor intersection modulus of about 0.6 m × 0.6 m (2 ft × 2 ft). This is mostly because this is compatible with all of the standard U.S. cellular raised floor systems since they come with the same pedestal spacing and square floor tile dimensions. Larger SRGP spacings are possible, but the upper frequency limit for such designs degrades rapidly as the spacing increases. The recommended spacing for an SRGG is 0.6 m × 0.6 m (2 ft × 2 ft) since this is both compatible with standard cellular raised floor systems and as it provides a good, useful high-frequency performance. For example, such a modulus as recommended provides an effective bandpass range from dc to approximately 25–30 MHz, and this is just what is necessary in almost all cases, to be provided (see FIPS Pub 94-1983, EPRI [B13], MIL-STD-188-124A [B42]). Larger modulus dimensions are therefore not generally recommended to be used except where installation conditions make the recommended dimension impractical, or where all of the associated equipment's OEMs have specific knowledge and experience that a larger modulus dimension will provide suitable operational characteristics.

Smaller modulus dimensions than recommended may be used to achieve better performance across the board. However, the use of a smaller modulus means that the SRGG is not likely to be installed as a suspended SRGG just below the level of the floor tile on a cellular raised floor system. This is avoided since an unworkable "fishnet" problem would be created for persons needing access to cables and other support equipment located beneath the floor. The use of smaller modulus SRGG designs is, however, quite practical if they are installed directly atop the structural subflooring and piping, and conduits, and similar items are then installed atop the SRGG. Welded wire meshes and screens are one way in which this form of design becomes practical.

Practical examples of an SRGG may be constructed using the metal bolt-in, horizontal support elements (e.g., "stringers") of a cellular raised floor. However, this is not as effective as an SRGG that is built in-place using copper conductors and exothermically welded joints (bottom of Figure 4-50) or mechanical conductor clamps at the X-Y junctions (top of Figure 4-50) and where it is either laid directly upon the structural concrete subfloor, or is suspended by combination X-Y and U-bolt types of clamps to the pedestal posts of the cellular raised floor at a point just beneath the top-cap assemblies, all as shown in Figure 4-50.

The metallic composition of the removable floor tiles used with the cellular raised floor apparently has some practical effect on the overall performance of the assembly when they are closely coupled to the SRGG elements comprising the 0.6 m × 0.6 m (2 ft × 2 ft) shorted turns. For example, these effects are most pronounced when the cellular raised floor's stringers themselves are used as the SRGG, or where a made SRGG is installed in suspended fashion just below the pedestal post's caps in a manner that permits close coupling between the floor tiles and the SRGG's shorted-turn elements.

 Copyright © 1999 IEEE. All rights reserved.

Copyright by the Institute Of Electrical & Electronics Engineers Inc
Fri Jul 20 10:35:54 2001

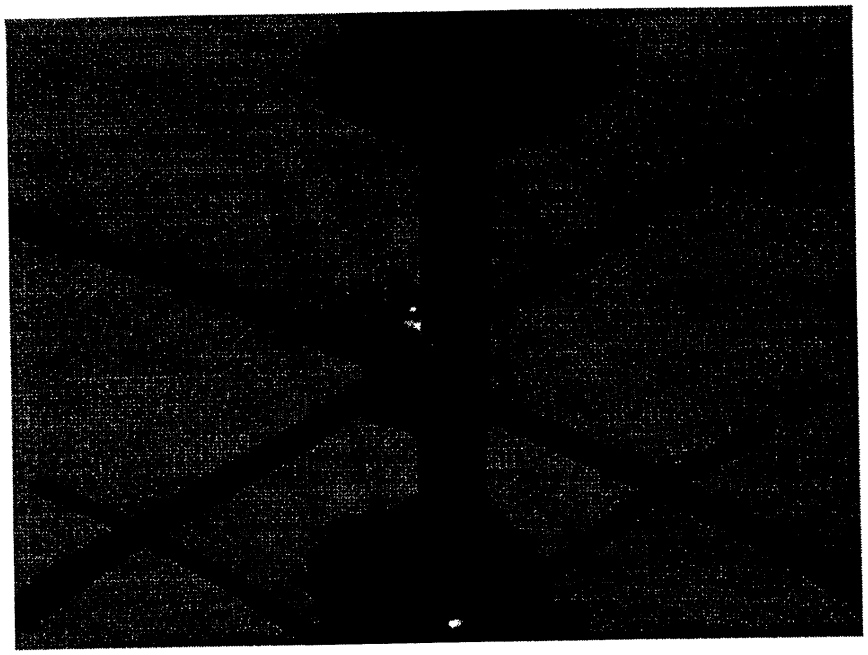

Figure 4-50—Typical cellular raised floor's pedestal post and later-made ground connections to/from it

The effects of metal in the floor tile are reduced almost to nothing when the shorted-turn SRGG elements are spaced away from the floor tile's undersurface, such as when the SRGG is laid directly upon the structural concrete subfloor and it is several tens of centimeters (a foot or so) or more in separation distance from the floor tiles. This is an exponential reduction in effect that is inversely related to spacing distance.

Metal-backed floor tiles and solid-cast backplate floor tiles seem to react in about the same manner. In both cases, floor tiles with metal composition such as sheet-metal backing or cast backplates, primarily act as "Q-dampers" to the resonant LC circuit described by the closed loop of the SRGG's perimeter conductors at each opening. This reduces undesirable "ringing" when these circuits are excited by an impinging current at or near their self-resonant frequency.

4.7.4.3.5 The spatial capacitor

At the point above which circuit analysis can be used to describe the action of the typical SRGP or SRGG, wave-transmission line theory must be used to explain its function. This also implies that the SRGG's surge impedance (Z_O) is generally necessary to be considered as a part of the explanation. It also must be considered that the SRGP or SRGG acts as one-half of a large area and as an undefined value capacitor—with all other nearby metallic items acting as the opposing plate in the capacitor. The form of the SRGG constructed in this fashion is a capacitor constructed in space, or that of a spatial capacitor. Another way to look at this is that the spatial capacitor acts as an extremely large area and physical size bypass capacitor to facility ground at each of the points where it is connected to something such as structural building steel, equipment ground, and earth grounding electrodes.

Copyright © 1999 IEEE. All rights reserved.

Copyright by the Institute Of Electrical & Electronics Engineers Inc
Fri Jul 20 10:35:55 2001

Taking the typical SRGG as an example, if a surge current is injected into one point on the SRGG it does not matter to the surge current if the SRGG is conductively connected into anything at all in order for the surge current to flow into and across the surface of the SRGG. What the surge current's leading edge of the waveform is trying to do is to charge the spatial capacitor that the SRGG represents to it. Since the leading edge of the surge current's waveform has not yet made much penetration into the area of the SRGG, it does not "know" if there are any conductive exit ports from the SRGG or not. It simply "sees" a given value of surge impedance at each junction of every ohms-per-square it encounters from the point on injection. The surface of the spatial capacitor then represents a continuing part of the original transmission line that is of changing dimensions, geometry, and impedance as the area involved increases. Hence, the surge waveform enters the SRGG at the injection point and immediately encounters a junction, and also an impedance discontinuity in most cases, which forces a reflection of some current to occur. For current entering the junction, a division of the current occurs in inverse proportion to the specific Z_O presented by the junction that is now splitting the surge into two more paths. This action is repetitive at each junction and is highly beneficial. This action is repetitive at each junction and is highly beneficial from an EMI reduction standpoint, as discussed in the following paragraphs.

Since the energy level cannot be raised from that available in the original surge current's wavefront and its subsequent body, the splitting of the current at the first and subsequent junctions on the SRGG forces a concurrent reduction in energy density as the wavefront progresses across the SRGG. Thus, the net energy charge in the overall spatial capacitor remains near that of the original surge waveform's energy content, except for losses incurred due to

a) *IR* "heat" radiation losses;

b) Far-field radiation losses;

c) Impedance mismatches at junctions that cause reflected energy back into the transmission line; and

d) Near-field coupling losses into other conductors.

The current, and therefore energy density at any given point on the surface of the SRGG, is also progressively reduced as the surge current's wavefront and body move into it and through it as a travelling wave. This action also affects the surge voltage at the leading edge of the travelling wave in that it is progressively reduced along with the current. As less current moves through a relatively constant impedance in the SRGG, progressively smaller amounts of *IZ* drop are going to occur— thus the described actions continuously occur. The indicated losses also affect the frequency content of the surge current's travelling wave in that HF components are diminished greatly over distance while LF ones are not. This is highly beneficial from an EMI control standpoint.

Once additional points of connection to/from the SRGG are reached by the travelling wave that is filling the SRGG with energy, current is diverted from the SRGG into these return paths and the net overall energy contained in the spatial capacitor is steadily diminished by that amount. This can be thought of as being equivalent to a resistive leakage current in a capacitor that is usually treated as a discrete component. As a result, the SRGG acting as a

Copyright © 1999 IEEE. All rights reserved.

Copyright by the Institute Of Electrical & Electronics Engineers Inc
Fri Jul 20 10:35:56 2001

spatial capacitor will not effectively hold charge over time. Anything that reduces higher-frequency components, current density, and di/dt in a given path is very beneficial from an EMI control standpoint.

Note that while the SRGG has a finite number of junctions of characteristic surge impedance Z_O, an SRGP has an infinite number of junctions that can only be described on a per-square basis of area. Hence, the action of the SRGP is always generally superior to that of the SRGG.

Note also that an SPG or TREE design may be described as a somewhat lossy and linearly constructed transmission line equipped with a few junctions, with each of some differing Z_O and likely unwanted resonance characteristics. Also note that the conductor system used to construct the SPG or TREE design has very limited surface area as compared to an SRGG, and especially to an SRGP. Hence, these designs do not perform as effective spatial capacitors and do not very effectively divide the surge current wavefront that can be propagated through the SPG or TREE conductor system as a travelling wave. This further explains the real limitations on these grounding methods in the higher-frequency regime when they act as large circuits.

4.7.4.3.6 Interconnection of multiple SRGP and SRGG levels

The concept of an SRGP or SRGG can be employed within a portion of a single equipment enclosure, among various interconnected equipment, or over an entire facility. In all cases, it is bonded to both the "local building ground" and to the GEC per the NEC. Large-scale, continuously constructed SRGGs are also possible and can cover considerable area in a facility as shown in Figure 4-51.

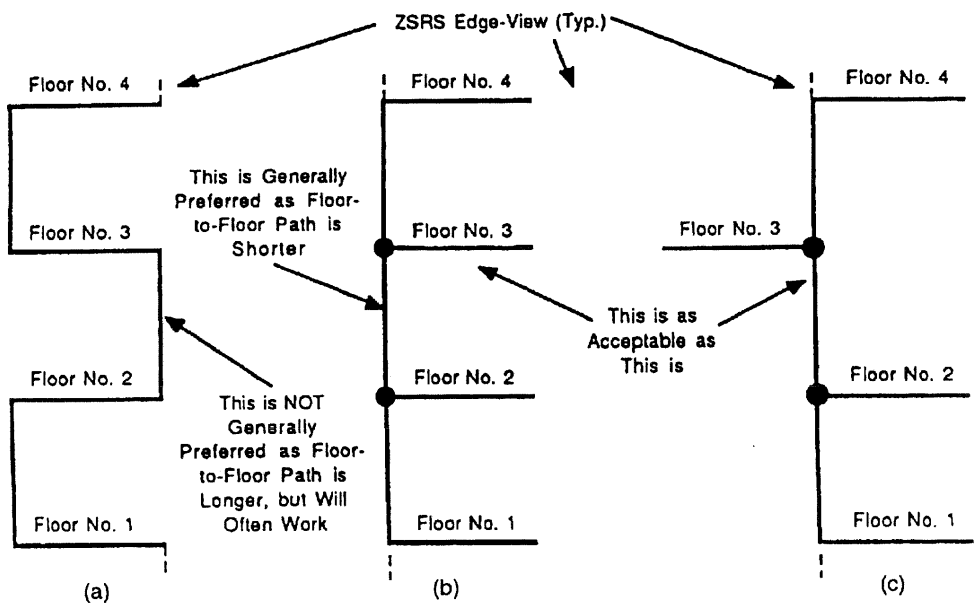

NOTE—Type (a) is less desirable than the recommended methods shown in Types (b) and (c).

Figure 4-51—Edge view of several SRS installations that are continuous and routed between floors of a facility

Copyright © 1999 IEEE. All rights reserved.

Copyright by the Institute Of Electrical & Electronics Engineers Inc
Fri Jul 20 10:35:57 2001

Within equipment cabinets, all related components, signal return leads, backplanes, etc., must be connected via short [less than (1/20)λ of the highest frequency of concern] conductors to the equipment chassis that form the SRGP or SRGG. All similar equipment-level SRGPs and SRGGs should be connected to a room-level SRGP or SRGG via multiple (short) conductors and to the associated building electrical power system's GEC. The room-level SRGP or SRGG must, in turn, be connected to one or more building-level SRGPs or SRGGs via multiple (short) conductors. This process continues until the total amount of electrical and electronic equipment of interest is interconnected to one large continuous network of SRGPs or SRGGs (see MIL-HDBK-419 [B41]).

The interconnecting conductors between SRGPs and SRGGs are preferred to be multiple, and have thin, wide cross sections to minimize their impedance at higher frequencies (e.g., use straps not round wires). This arrangement extends dc and low-frequency benefits to large areas of the facility in which it is used, but only the individual contiguous SRGP or SRGG areas possess full broadband grounding capability extending into the high-frequency range of 25 MHz to 30 MHz.

With a sufficient number of interconnections of small circuit dimensions installed between two separate SRGP or SRGG areas, the end result may approach that of a contiguous SRGP or SRGG. For example, the most practical location for such a construction often occurs when one SRGP or SRGG is installed directly above or below the other on different floors of the same building.

4.7.4.3.7 Attachment to earth electrode subsystem

SRSs that are externally applied to equipment in a room, etc., must be grounded per the NEC and NFPA 780-1997. These connections are for safety and protection from lightning surge-related sideflashes. Since intense and destructive sideflashes are known to occur up to, and in excess of, 1.8 m (6 ft) horizontally, this is not a concern to be taken lightly.

Connection by short, robust grounding/bonding conductors between the SRS and any grounded metallic items that are within the above sideflash range is recommended practice. Such connections would typically mean multiple points of grounding/bonding being established between structural building steel, cold water piping and grounded metal ducting systems, and any electrodes or their conductors that might be within sideflash range.

4.7.5 Lightning protection subsystem

The sole purpose of the lightning protection subsystem is the safe transport of lightning-related currents through the facility to the earth grounding electrode subsystem. This is accomplished by providing highly conductive paths to direct the lightning strike current to/from earth, while minimizing alternate paths via other items within the building. These conductors also form important waveguide paths for the ionized air in the arc channel at higher frequency, but do not particularly control potentials over their paths at any frequency. This latter point is very important to take note of as it relates not to the conductor's cross-sectional area and related low amounts of dc resistance, but to the conductor's self-inductance and the $-e = L\, di/dt$ effects along its length.

Copyright © 1999 IEEE. All rights reserved.

Copyright by the Institute Of Electrical & Electronics Engineers Inc
Fri Jul 20 10:35:58 2001

The lightning protection subsystem is not required by code to present any particular value or range of impedances to the lightning current that may be impressed upon it. Neither the NEC, NFPA 75-1999, nor NFPA 780-1997 establish impedance limits on the earth ground electrode subsystem associated with the lightning protection system. Instead of lower resistance connections to earth, these codes favor increased frequency of bonding of the lightning conductor system to other grounded conductors within the building. This approach results in a means of reducing dangerous sideflashes and the use of more (parallel) down-conductor paths throughout the building that are terminated to a buried ring ground.

4.8 Shielding concepts

The objective of both electromagnetic and electrostatic shielding is the significant reduction or elimination of the incidence of magnetic (or electric) fields from circuits. The basic approach is to interpose between the field source and the circuit a barrier of conducting material. Then, as changing field flux attempts to penetrate the barrier, it produces eddy currents in the barrier whose fields oppose the field of the inducing source. This allows the circuit to experience only the net field which, depending on the barrier material and geometry, can be considerably less than the source field (see Greenwood [B19]).

Closed-form analytical solutions for several geometries are possible (see Carter [B7]). Generally, it is necessary to solve the Laplace equation in the free space regions on either side of the barrier and the diffusion equation within the barrier material. These solutions are then matched at the boundaries. Several approximation techniques are also known (see Stratton [B50]). Specific shielding-design considerations are presented in Chapter 8.

4.8.1 Electrostatic shielding

Electrostatic shielding consists of conductive barriers, metal enclosures, or metal conduits or cable coverings around circuits. The spatial electrostatic shield acts as a capacitive voltage divider between the field source and circuit, as shown in Figure 4-52. For a shield on a cable, the voltage divider action appears as shown in Figure 4-53. A low inductance means for connection of the shield to ground is required to facilitate the capacitive voltage divider effect.

Per Figure 4-53 it is seen that less capacitance between the shield and the inner conductor(s) is beneficial and that having a low impedance longitudinally along the run of the shield with a low-impedance termination to ground is most important. The shield's impedance is where the voltage will be built-up to ultimately be capacitively coupled between the shield and inner conductor, so this path must be of low impedance in relation to "ground" if the noise to be coupled is to be minimized.

Copyright © 1999 IEEE. All rights reserved.

Copyright by the Institute Of Electrical & Electronics Engineers Inc
Fri Jul 20 10:35:59 2001

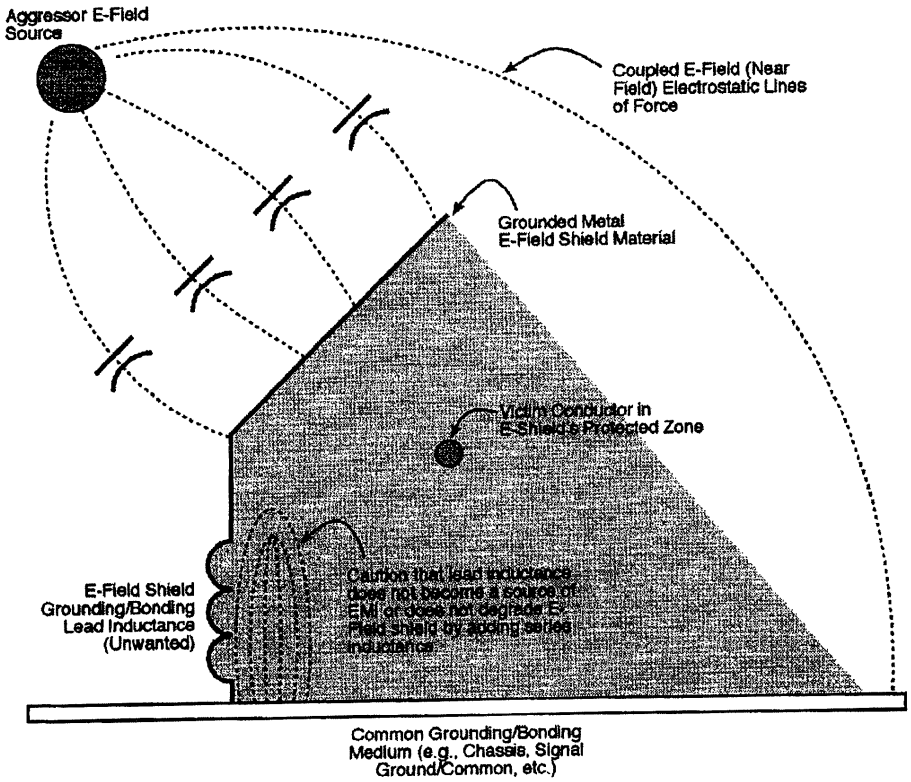

Figure 4-52—Electric field shielding using grounded metal to establish a voltage divider

Copyright © 1999 IEEE. All rights reserved.

Copyright by the Institute Of Electrical & Electronics Engineers Inc
Fri Jul 20 10:36:00 2001

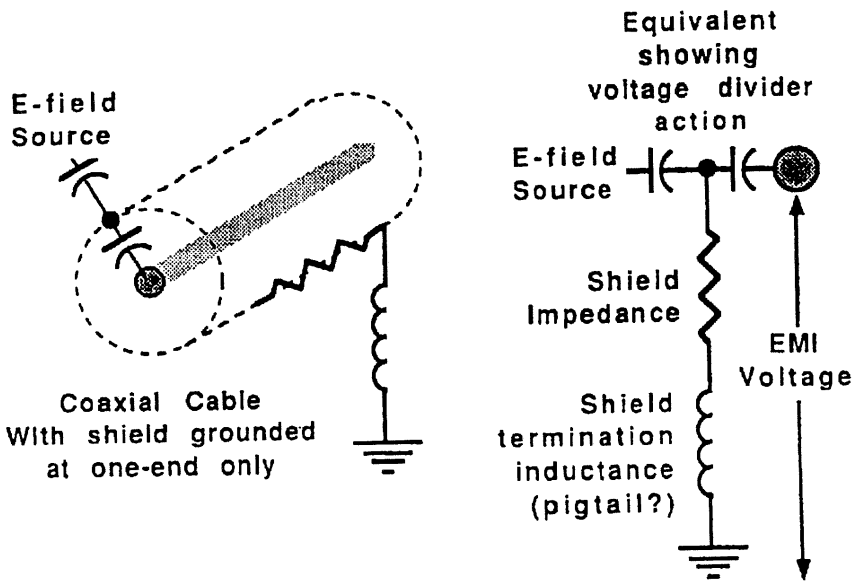

Figure 4-53—Capacitive voltage divider action in shield on a cable

In addition to electrostatic shielding as employed on cables, the interwinding Faraday shield installed in a shielded isolation transformer is an excellent example of the benefits of electrostatic shielding. Its operation is almost identical to that of the shield in the cable.

In order to be effective, shields must be grounded via low-impedance paths at the frequencies of interest. Long grounding conductors and long (single-grounded) shields exhibit reduced effectiveness at high frequencies due to inductive reactance in the grounding conductor or shield (e.g., $+jX$ is randomly being placed in series with $-jX$). Therefore, very short grounding/bonding leads must be used, and they must be connected at the nearest equipment ground. Long shields need to be grounded at multiple locations along their length. Cable shields must be either grounded at both ends or grounded at one end and grounded via an SPD at the opposite end.

4.8.2 Electromagnetic shielding for EMI

Effective electromagnetic shielding also consists of schemes such as high-frequency grounded conductive barriers, metal enclosures, metal conduits, and cable coverings around circuits. The objective of electromagnetic shielding is the minimization of magnetic flux coupling (mutual inductance) from an aggressor (e.g., power) source to the victim (e.g., control or signal) circuit. The following generalizations are also pertinent:

a) Physically separating the aggressor source from the victim circuit minimizes the mutual inductance, and hence near-field EMI coupling, between them.

b) The enclosed area of the victim circuit can be reduced so as to reduce the number of near-field flux lines intercepted from the aggressor H-field EMI source.

Copyright © 1999 IEEE. All rights reserved.

Copyright by the Institute Of Electrical & Electronics Engineers Inc
Fri Jul 20 10:36:01 2001

c) Twisted pair conductors in the aggressor and victim circuits take advantage of the twisting wherein about half the stray magnetic flux couples into the circuit in each direction on the twisted pair, thus giving a small net flux coupling to be radiated from an aggressor EMI source or into a victim circuit.

d) Where twisting is not practical, such as with ac power conductors, close spacing of the conductors can be accomplished so that they appear as one conductor with equal and opposite currents, producing a minimally radiating H field.

e) Enclosing the signal conductors inside of a shield and then grounding the shield at both ends. This is a key concept for protection of the contained conductors from the H-field effects produced by nearby lightning and other surge currents.

4.8.2.1 Cable shields grounded at both ends

The "golden rule" of cable shielding requires that the shield on a cable only be grounded one time and at one end only. This "rule" has been established in order to prevent conductive "ground loops" from being established that would cause unwanted current to flow in a shield that is grounded at more than one place, e.g., at each end. The problem is that this is not a valid "rule" except sometimes when dealing with dc through LF signals (particularly analog signals) and where the signal circuits are not connected in the differential mode (see Lewis [B33]).

Modern digital signal transport circuits that require EMI protection of the signal from near-field magnetic effects require that the shield be grounded at both ends in order that shield current be developed as a result of the near-field magnetic related EMI. This shield current is then utilized to create a "bucking" current in the victim signal conductors, which will then attenuate the originally induced EMI. This is an important concept and is one that does not have any adverse effects on the cable shield's ability to provide electrostatic shielding as discussed in 4.8.1.

What occurs per the above is that any EMI current induced in the shield by the original aggressor magnetic field EMI, also produces a proportional magnetic field around the shield itself. This magnetic field is also an EMI-related field that causes a current flow in the contained victim signal conductors just as the original, externally applied EMI magnetic field does. The difference is that the EMI current induced into the victim signal conductors by the shield's EMI magnetic field produces approximately a 180° phase shift from the externally caused EMI current in the victim conductors. Hence, the two EMI induced currents are flowing in the CM on the victim signal conductors and are in opposition to one another, thus producing the desired "bucking effect."

Cable shields grounded at both ends can carry unwanted shield current such as that caused by potential difference between the two grounded ends of the shield. In general, these currents will be related to the power system's fundamental and harmonic frequencies thereof.

DC and LF currents in the shield, as described above, can be eliminated or significantly attenuated by placing a blocking device between the shield and its ground connection point at one end. For example, a series-connected, back-to-back arranged stack of rectifier diodes can be used to establish a hold-off voltage due to the forward voltage drop across the diodes. If this hold-off voltage is slightly higher than that measured between the shield and its ground point,

Copyright © 1999 IEEE. All rights reserved.

Copyright by the Institute Of Electrical & Electronics Engineers Inc
Fri Jul 20 10:36:02 2001

with the shield open at the measurement end, there will be no current flow in the shield until this voltage level is exceeded. For example, normal power system currents won't flow but a lightning strike will cause a current flow, and the desired bucking current action can then ensue. The use of transient or surge-current-rated zener diodes such as silicon avalanche diodes is generally a better approach than the use of typical rectifier diodes.

Another approach that is very practical, and is used by many telephone companies to break ground-loops in the shield of the subscriber loop cable that is brought into the customer's premises, is to place an ac capacitor between the shield and the associated ground termination. This arrangement blocks dc completely, and due to the high reactance of the capacitor at LF almost completely blocks power-system-related shield currents. Currents at HF, such as those produced by lightning, however, will "see" the capacitor as a very low ohmic value and will cause the desired shield current to flow in order to produce the bucking effects described above.

Note that when a significant difference in frequency exists between the undesired shield current caused by potential difference at the cable's ends and the signal process being carried on the contained conductors, the shield's transfer impedance parameter becomes highly important. Simply put, the signal process in unlikely to be affected in this case even if unwanted shield current is observed to be flowing for whatever reason. This is the typical case with high-speed digital signal processes as are normally the case on modern designs.

4.8.2.2 Hazards associated with cable shields grounded at one end only

When a cable's shield is grounded at one end only there must be an opposing end with the shield ungrounded, and such an ungrounded end represents a significant fire and shock safety hazard should the cable's shield become energized for whatever reason (see Lewis [B33]). Three common forms of energization are

a) Lightning;

b) AC power system ground faults; and

c) Accidental contact of the shield at some point along its length with a conductor of another system of higher voltage.

In any of the three cases above the shock hazard is readily apparent in that no one would wish to be in contact with the exposed end of an ungrounded shield and, for example, equipment or earth ground during the time of energization. The fire hazard is not as readily apparent since it generally requires that an arc be established between the cable shield's end and some nearby grounded item (such as the metal enclosure of the terminating equipment) and with some flammable material being nearby. However, if the ungrounded end of the shield is brought into the equipment, then there may be a number of combustible items that an arc can affect such as printed circuit boards, air filters (with lint and dust in them), and other materials. In addition, even if a fire does not result in this case the arc may cause serious damage to internal electronic circuits where it strikes, or damage from the effects from the near fields surrounding it.

Copyright © 1999 IEEE. All rights reserved.

Copyright by the Institute Of Electrical & Electronics Engineers Inc
Fri Jul 20 10:36:04 2001

The NEC addresses the foregoing hazard by requiring that any cable's signal conductors and related shield be protected or grounded at the point where the cable passes from outside to inside of a building. This point of penetration is called the demarcation point. NEC requirements are that all of the signal conductors be equipped with a properly installed and rated SPD at the demarcation point. If the shield is to be brought into the building across the demarcation point, then the shield is required to be solidly grounded at this point or be equipped with its own SPD connected between the shield and ground.

4.9 References

This recommended practice shall be used in conjunction with the following publications. When the following standards are superseded by an approved revision, the revision shall apply.

ANSI C84.1-1995, American National Standard for Electric Power Systems and Equipment—Voltage Ratings (60 Hz).[10]

FIPS Pub 94-1983, Guideline on Electrical Power for ADP Installation.[11]

IEEE Std 142-1991, IEEE Recommended Practice for Grounding of Industrial and Commercial Power Systems (*IEEE Green Book*).[12]

IEEE Std 446-1995, IEEE Recommended Practice for Emergency and Standby Power Systems for Industrial and Commercial Applications (*IEEE Orange Book*).

IEEE Std C57.12.00-1993, IEEE Standard General Requirements for Liquid-Immersed Distribution, Power, and Regulating Transformers.

IEEE Std C57.12.01-1998, IEEE Standard General Requirements for Dry-Type Distribution and Power Transformers Including Those With Solid-Cast and/or Resin-Encapsulated Windings.

IEEE Std C62.41-1991 (Reaff 1995), IEEE Recommended Practice on Surge Voltages in Low-Voltage AC Power Circuits.

NFPA 70-1999, National Electrical Code® (NEC®).[13]

[10]ANSI publications are available from the Sales Department, American National Standards Institute, 11 West 42nd Street, 13th Floor, New York, NY 10036, USA (http://www.ansi.org/).

[11]U.S. Regulatory Guides are available from the Superintendent of Documents, U.S. Government Printing Office, P.O. Box 37082, Washington, DC 20013-7082, USA.

[12]IEEE publications are available from the Institute of Electrical and Electronics Engineers, 445 Hoes Lane, P.O. Box 1331, Piscataway, NJ 08855-1331, USA (http://www.standards.ieee.org/).

[13]The NEC is published by the National Fire Protection Association, Batterymarch Park, Quincy, MA 02269, USA (http://www.nfpa.org/). Copies are also available from the Institute of Electrical and Electronics Engineers, 445 Hoes Lane, P.O. Box 1331, Piscataway, NJ 08855-1331, USA (http://www.standards.ieee.org/).

Copyright © 1999 IEEE. All rights reserved.

Copyright by the Institute Of Electrical & Electronics Engineers Inc
Fri Jul 20 10:36:05 2001

NFPA 75-1999, Standard for the Protection of Electronic Computer/Data Processing Equipment.[14]

NFPA 77-1993, Recommended Practice on Static Electricity.

NFPA 780-1997, Standard for the Installation of Lightning Protection Systems.

4.10 Bibliography

Additional information may be found in the following sources:

[B1] Allen, G. W., and Segall, D., "Monitoring of Computer Installations for Power Line Disturbances," *IEEE Winter Power Meeting Conference Paper,* WINPWR C74 199-6, 1974 (abstract in *IEEE Transactions on PAS,* vol. PAS-93, p. 1023, Jul/Aug 1974).

[B2] ANSI C63.4-1992, American National Standard for Methods of Measurement of Radio-Noise Emissions from Low-Voltage Electrical and Electronics Equipment in the Range of 9 kHz to 40 GHz.

[B3] Arrillaga, J. et al., *Power System Harmonics.* New York: John Wiley & Sons, 1985.

[B4] Blake, L. V., *Antennas.* New York: John Wiley & Sons, 1966.

[B5] Boxleitner, W., *Electrostatic Discharge and Electronic Equipment.* New York: IEEE Press, 1989.

[B6] Boyce, C. F., Ch. 25: "Protection of Telecommunications Systems," vol. 2, *Lightning Protection, In Lightning,* R.H. Golde (ed), Academic Press, 1977.

[B7] Carter, G. W., *The Electromagnetic Field in its Engineering Aspects.* London, New York, and Toronto: Longmans, Green and Co., 1954.

[B8] Cianos, N. and E. Pierce, "A Ground-Lightning Environment for Engineering Usage," Stanford Research Institute Project No. 1834, McDonald Douglas Astronautics Co., Contract No. L.S. 2817-A3, August 1972.

[B9] Crepaz, S., "Eddy Current Losses in Rectifier Transformers," *IEEE Transactions on Power Apparatus and Systems,* vol. PAS-89, no. 7, pp. 156–165, Sept/Oct 1970.

[B10] Denny, Hugh W., *Grounding for the Control of EMI.* Don White Consultants, Inc. Gainesville, VA.

[14]NFPA publications are published by the National Fire Protection Association, Batterymarch Park, Quincy, MA 02269, USA (http://www.nfpa.org/).

Copyright © 1999 IEEE. All rights reserved.

Copyright by the Institute Of Electrical & Electronics Engineers Inc
Fri Jul 20 10:36:06 2001

[B11] Edison Electric Institute, Power Indices, ASAI (Average Service Availability Index), Washington, DC.

[B12] Emanuel, A. E., X. Wang, "Estimation of Loss of Life of Power Transformers Supplying Nonlinear Loads," *IEEE Transactions on Power Apparatus and Systems,* vol. PAS-104, no.3, Mar. 1985.

[B13] EPRI, *Handbook for Electromagnetic Compatibility of Digital Equipment in Power Plants, vol. 2: Implementation Guide for EMI Control,* EPRI TR-102400-V2 Project 3406-07, Final Report, Oct. 1994.

[B14] Gallace, L., and Pujol, H., "The Evaluation of CMOS Static-Charge Protection Networks and Failure Mechanisms Associated With Overstress Conditions as Related to Device Life," *Reliability Physics Symposium Proceedings,* April 1977.

[B15] Golde, R. H., Ch 17: "The Lightning Conductor," vol. 2, "Lightning," in *Lightning Protection,* R.H. Golde (ed), London: Academic Press, 1977.

[B16] Goldstein, M., and Speranza, P. D., "The Quality of U.S. Commercial AC Power," *IEEE International Telecommunications Energy Conference (INTELEC),* pp. 28–33 (CH 1818-4), 1982.

[B17] Goedbloed, Japer J., *Electromagnetic Compatibility.* Prentice Hall International, 1992, pp. 22–25.

[B18] Greason, W. D., *Electrostatic Damage in Electronics: Devices and Systems,* New York: John Wiley and Sons, 1987.

[B19] Greenwood, A., *Electrical Transients in Power Systems,* 2nd. ed., New York: John Wiley and Sons, 1991.

[B20] Gruzs, T. M., "A Survey of Neutral Currents in Three-Phase Computer Power Systems," *IEEE Transactions on Industry Applications,* vol. IA-26, no.4, July 1990.

[B21] Hwang, M. S., Grady, W. M., and Sanders Jr., H. W., "Assessment of Winding Losses in Transformers Due to Harmonic Currents," *Proceedings, IEEE International Conference on Harmonics in Power Systems,* Worcestor Polytechnic Institute, pp. 119–124, Oct. 1984.

[B22] IEC 60801-4:1988, Electromagnetic Compatibility for Industrial-Process Measurement and Control Equipment, Part 4: Electrical Fast Transient/Burst Requirements.[15]

[B23] IEC 60555-1:1982, Disturbances in Supply Systems Caused by Household Appliances and Similar Electrical Equipment, Part 1: Definitions.

[15]IEC publications are available from the Sales Department of the International Electrotechnical Commission, Case Postale 131, 3, rue de Varembé, CH-1211, Genève 20, Switzerland/Suisse (http://www.iec.ch/). IEC publications are also available in the United States from the Sales Department, American National Standards Institute, 11 West 42nd Street, 13th Floor, New York, NY 10036, USA (http://www.ansi.org/).

Copyright © 1999 IEEE. All rights reserved.

Copyright by the Institute Of Electrical & Electronics Engineers Inc
Fri Jul 20 10:36:08 2001

[B24] IEC 60555-2:1982, Disturbances in Supply Systems Caused by Household Appliances and Similar Electrical Equipment, Part 2: Harmonics.

[B25] IEC 60555-3:1982, Disturbances in Supply Systems Caused by Household Appliances and Similar Electrical Equipment, Part 3: Voltage Fluctuations.

[B26] IEEE Power Systems Harmonics Working Group Report, *Bibliography of Power System Harmonics,* Parts I & II, *IEEE Transactions on Power Apparatus and Systems,* vol. PAS-103, no.9, Sept. 1984.

[B27] IEEE Std 141-1993 (Reaff 1999), IEEE Recommended Practice for Electric Power Distribution for Industrial Plants. (*IEEE Red Book*).

[B28] IEEE Std 519-1992, IEEE Recommended Practices and Requirements for Harmonic Control in Electric Power Systems.

[B29] IEEE Std C57.110-1998, IEEE Recommended Practice for Establishing Transformer Capability When Supplying Nonsinusoidal Load Currents.

[B30] Keeling, M., *Evaluation and Design Reference Guide for the Grounding, Bonding, Shielding, and Surge Suppression of Remote Computer Systems.*, USDA Forest Service, 1987.

[B31] Key, T. S., "Diagnosing Power Quality Related Computer Problems," IEEE Transactions on Industry Applications, vol. IA-15, No.4, July/Aug 1979.

[B32] Lee, K. S., *EMP Interaction: Principles, Techniques, and Reference Data.* New York: Hemisphere Publishing Corporation, 1986.

[B33] Lewis, Warren H., "Effective Computer Installations Require System Noise Protection," *Computer Technology Review,* Fall 1984.

[B34] Lewis, Warren H., "Testing Isolation Transformers for Attenuation," *Electrical Construction & Maintenance Magazine,* Intertec Publishing Corp., Dec. 1995.

[B35] Martzloff, F. D., "Coupling, Propagation, and Side Effects of Surges in an industrial Building Wiring System," *IEEE Transactions on Industry Applications,* vol. IA-26, no.2, pp. 193–203, March/April 1990.

[B36] Martzloff, F. D., "Metal-OxideVaristor Versus Environment: Winning the Rematch," *IEEE Transactions on Power Delivery,* vol. PWRD-1, No.2, pp. 59–66, April 1986.

[B37] Martzloff, F. D., and Gruzs, T. M., "Power Quality Surveys: Facts, Fictions, and Fallacies," *IEEE Transactions on Industry Applications,* vol. 24, no.6, pp. 1005–1018, Nov/Dec 1988.

Copyright © 1999 IEEE. All rights reserved.

Copyright by the Institute Of Electrical & Electronics Engineers Inc
Fri Jul 20 10:36:09 2001

[B38] Martzloff, F. D., and Leedy, T. F., "Electrical Fast-Transient Tests: Applications and Limitations," *IEEE Transactions on Industry Applications,* vol. IA-26, no.1, pp. 151–159, Jan/Feb 1990.

[B39] McCann, G. D., "The Measurement of Lightning Currents in Direct Strokes," *AIEE Transactions,* vol. 63, pp. 1157-64, 1944.

[B40] McEachern, A., *Handbook of Power Signatures.* Foster City, CA: Basic Measuring Instruments (BMI) Corporation, 1988.

[B41] MIL-HDBK-419, Grounding, Bonding, and Shielding for Electronic Equipments and Facilities, vol. 1 (Basic Theory), vol. 2 (Applications).[16]

[B42] MIL-STD-188-124A, Grounding, Bonding, and Shielding for Common Long Haul Tactical Communications Systems Including Ground Based Communications— Electronics Facilities and Equipments.

[B43] Nordgard, J. D., and Chen, C. L., "FAA Lightning Protection Study: Lighting Induced Surges on Buried Shielded Transmission Lines; Numerical Analysis and Results," FAA Report #FAA-RD-77-83, FAA-Georgia Institute of Technology Workshop on Grounding and Lightning Technology, May 1977.

[B44] Ott, Henry W., *Noise Reduction Techniques in Electronic Systems.* New York: Wylie-Interscience Publications, 1976.

[B45] *Radio Engineers Handbook,* New York: McGraw-Hill.

[B46] Rudenberg, *Transient Performances of Electrical Power Systems.* Boston, MA: MIT Press, 1970.

[B47] Skilling, H. H., *Electrical Engineering Circuits.* New York: John Wiley & Sons, 1965.

[B48] Standler, R. B., "Calculation of Energy in Transient Overvoltages," *IEEE National Symposium on Electromagnetic Compatibility,* pp. 217–222, 1989.

[B49] Standler, R. B., *Protection of Electronic Circuits for Overvoltages.* New York: John Wiley & Sons, 1989.

[B50] Stratton, J. A., *Electromagnetic Theory.* New York: McGraw-Hill, 1941.

[B51] Sunde, E. D., *Earth Conduction Effects on Transmission Systems,* Van Nostrand Company, 1949, and Dover Publications, 1968.

[16]MIL publications are available from Customer Service, Defense Printing Service, 700 Robbins Ave., Bldg. 4D, Philadelphia, PA 19111-5094.

 Copyright © 1999 IEEE. All rights reserved.

Copyright by the Institute Of Electrical & Electronics Engineers Inc
Fri Jul 20 10:36:10 2001

[B52] Sunde, E. D., *Lightning Protection for Buried Toll Cable,* Bell System Technical Journal, No.24, April 1945.

[B53] TCI Trans-Coil, Inc. Technical Bulletin KLCCAT, 11-1-95.

[B54] *The Dranetz Field Handbook for Power Quality Analysis.* Edison, NJ: Dranetz Technologies, Inc., 1991.

[B55] UL 1449-1996, Transient Voltage Surge Suppressors.[17]

[B56] UL 1561-1999, Standard for Dry-Type General Purpose and Power Transformers.

[B57] UL 1562-1999, Transformers, Distribution, Dry-Type— Over 600 Volts.

[B58] Underwriters Laboratories Inc., Electrical Construction Materials Directory 199*, (*the green book*) ISBN-1-55989-166-1.

[B59] Van Keuren, E., "Effects of EMP Induced Transients on Integrated Circuits," *IEEE Symposium on Electromagnetic Compatibility,* pp. 1–5, 1975.

[B60] von Jouanne, et al., "Filtering Techniques to Minimize the Effect of Long Motor Leads on PWM Inverter-Fed AC Motor Drive Systems," *IEEE Transaction on Industry Applications,* vol. 32, no. 4, pp. 919–926, July/August 1996.

[B61] Vorgucic, A.D., *Condition of Evaluation of the Protection Zone of the Lightning Rod,* FAA Report #FAA-RD-78-83, FAA-Georgia Institute of Technology Workshop on Grounding and Lightning Technology, 1978.

[B62] Waters, W., *Electrical Induction From Distant Current Surges.* Englewood Cliffs, NJ: Prentice-Hall, Inc. 1983.

[17]UL standards are available from Global Engineering Documents, 15 Inverness Way East, Englewood, Colorado 80112, USA (http://global.ihs.com/).

Copyright © 1999 IEEE. All rights reserved.

Copyright by the Institute Of Electrical & Electronics Engineers Inc
Fri Jul 20 10:36:11 2001

Chapter 5
Instrumentation

5.1 Introduction

Power quality (PQ) site surveys and longer-term monitoring programs both require proper instrumentation in order to be effective. A wide variety of measuring equipment is available to support the PQ investigator. The challenge is in selecting the most appropriate instrumentation for a given test or measurement (see Clemmensen [B4]).[1]

The intent of this chapter is to provide the reader with an overview of the available tools that may be used to perform a power quality site survey. Emphasis is placed on the fact that most building electrical systems support utilization equipment that does not draw sinusoidal current, which contributes to distortion of the voltage sine wave, therefore, true root-mean-square (rms) instrumentation should be used to measure these voltages and currents. This issue will be discussed in more detail in 5.5.

The chapter is subdivided into four main clauses.

— 5.2 lists the range of instrumentation available to perform the various levels of a power quality survey.

— 5.3 describes the range of methods and hardware used to measure voltages and currents.

— 5.4 describes each measuring device and its use during the site survey.

— 5.5 describes factors related to measurement accuracy and the limitations that can be encountered when incorrect instruments are selected for voltage or current measurements.

5.2 Range of available instrumentation

Chapter 6 describes the recommended practice for conducting measurements with the appropriate instruments during various levels of a site survey based on the following steps:

a) Determine the soundness of the power distribution (wiring) and grounding system supplying the equipment.

b) Determine the quality of the ac voltage supplying the equipment.

c) Determine the sources and impact of power system disturbances on equipment performance.

d) Analyze the survey data to identify cost-effective improvements or corrections, both immediate and in the future.

[1]The numbers in brackets correspond to those of the bibliography in 5.7.

Copyright © 1999 IEEE. All rights reserved.

Previous page is blank

Copyright by the Institute Of Electrical & Electronics Engineers Inc
Fri Jul 20 10:36:12 2001

Recommended instruments required to implement these steps are shown in Table 5-1. These instruments are discussed further in 5.4.

5.3 Voltage and current measurements

The tools used to analyze components of power flow rely on accurate information gathered from either voltage or current measurements, and in many cases both. As previously stated, recommended practice is to use true rms metering equipment when conducting the site survey because algorithms used for computing power flow parameters such as harmonic distortion, power factor, efficiency, etc., rely on the accuracy of the sampled voltages and currents. This clause describes the various techniques and hardware used to obtain correct measurements of voltages and currents. Emphasis is on the techniques that lend themselves to ease of use when conducting the site survey.

5.3.1 Voltage measurements

AC meters are designed to measure the "effective value" of the ac voltage (or current) in delivering energy to the load, so that 1 W of ac voltage and current produces exactly the same amount of heat as 1 W of dc voltage and current. Mathematically this "effective value" is found by taking the square root of the mean of the sum of the squared values and hence the name "rms."

Before the advent of digital electronics, ac meters had magnetic movements with a needle attached to them. The most common was the D'Arsonval meter in which the meter movement responded to the average of a rectified sine wave. A scale was placed on the face of the meter with a "form factor" built in to convert the reading to an equivalent rms value. Note that the meter actually measures the average of the rectified wave and the form factor converts it to rms based on the assumption that the waveform is sinusoidal.

Early digital meters (and low-cost ones today) utilize this same method of either averaging a rectified wave, or measuring the peak of the wave and multiplying the result by a scaling factor to obtain the equivalent rms. As with the analog meter movement, the rms value obtained is correct only when the measured waveshape is sinusoidal. To address the issue of nonsinusoidal waveshapes, "true rms" meters have come into widespread use. These true rms meters will accurately measure the rms value, regardless of the waveshape.

5.3.1.1 True rms voltmeters

True rms reading voltmeters indicate the square root of the sum of the squares of all instantaneous values of the cyclical voltage waveform. A variety of true rms voltmeters are in use, including the thermocouple type, square-law type, and sampling type. These meters will indicate the correct or true rms value for every type of waveshape from sinusoidal waves to pure square waves, and are therefore the preferred voltage measuring instrument for the site survey.

Copyright © 1999 IEEE. All rights reserved.

Copyright by the Institute Of Electrical & Electronics Engineers Inc
Fri Jul 20 10:36:13 2001

Table 5-1—Recommended test instruments for conducting a site survey

Instrument	Minimum required instrumentation				Multiple function or special purpose instrumentation			
	True rms multimeter	True rms clamp-on ammeter	Ground impedance tester	Earth ground tester	Oscilloscope with current transducer	Oscilloscope with line decoupler	Power line monitor	Spectrum analyzer
Measurement	**Voltage continuity**	**Current**	**Impedance**	**Resistance impedance**	**Current waveforms**	**Voltage waveforms**	**Voltage current harmonics**	**Harmonics noise spectra**
Neutral-ground bond (1) Grounding electrode conductor connections	•[a]					•	•	
(2) Main bonding jumper connections	•[a]					•	•	
(3) Extraneous bonds downstream from service entrance and/or separately derived secondary bond	•	•			•	•	•	
Neutral conductor sizing, routing (1) Parity or greater than phase conductor neutral sizing		•			•		•	
(2) Shared (daisy chained) neutrals		•			•		•	
Equipment grounding system (1) Equipment grounding conductor impedance			•					
(2) Equipment grounding conductor integrity when used with supplementary grounding electrodes	•							
Dedicated feeders, direct path routing (1) Other equipment on the circuit of interest		•			•		•	
(2) Equipment grounding conductor impedance			•					
(3) Mixed grounding means problems		•			•		•	
Grounding electrode impedance (1) Resistance of the grounding electrode				•				
(2) Grounding electrode conductor integrity		•						
Conduit/enclosure ground continuity (1) Metallic enclosure, conduit, raceway, panelboard continuity	•		•			•	•	
(2) Bonding jumpers where nonmetallic conduit is used	•		•			•	•	
(3) Continuity of expansion joints telescoping raceway, and wiremolds	•		•			•	•	
Separately derived system grounding (1) Verify neutral as separately derived and not interconnected	•		•					
(2) Impedance of neutral-ground bond on secondary			•			•	•	
(3) Grounding electrode conductor connections			•			•	•	
Isolated ground systems (1) Conductor insulation from conduit ground systems	•							
Power line variations (1) Undervoltages or overvoltages	•					•	•	
(2) Momentary sags and swells						•	•	
(3) Subcycle transient events						•	•	•
(4) Voltage notching						•	•	
(5) Voltage interruptions						•	•	
(6) Electrical noise						•	•	•
(8) Harmonics (voltage and current)							•	•
(9) Frequency variations							•	•

[a]microohm meter

Copyright © 1999 IEEE. All rights reserved.

Copyright by the Institute Of Electrical & Electronics Engineers Inc
Fri Jul 20 10:36:14 2001

5.3.1.1.1 Thermocouple type

The rms value of a voltage is defined in terms of the heat it will produce in a resistive load. Thus, a natural way to measure true rms voltage is by means of a thermocouple device, which includes a heating element and a thermocouple in an evacuated chamber. The heating element produces heat in proportion to the rms voltage across it, and the thermocouple produces a dc voltage in proportion to the generated heat. Since thermocouples are affected by inherent nonlinearities and by environmental temperature, a second thermocouple is typically added in a feedback loop to cancel these effects and produce a workable rms-responding voltmeter. The major drawback to this type of measurement is the time it takes for the temperature of the measuring element to stabilize.

5.3.1.1.2 Square-law type

This voltmeter uses the nonlinear characteristics of a P-N junction to produce an analog squaring circuit. From this, the rms voltage is calculated as the square root of the mean of the squared values.

5.3.1.1.3 Sampling devices

The ac voltage is sampled at relatively high rates; the sampled values are squared and then averaged over one or more complete ac cycles. The square root of the result is then displayed as the true rms value. This technique lends itself nicely to digital manipulation without the drifting overtime and temperature inherent in analog square-law devices.

5.3.1.2 Average responding rms voltmeters

All rms meters are calibrated to read in rms units. AC voltmeters that respond to average, peak, or rms values are commonplace. Typical analog voltmeters are an "average actuated, rms calibrated" device. The assumption is that the measured wave is sinusoidal, and that the ratio between the rms and average values is always a constant. A multiplier called the "form factor" is used to convert the averaged value to the equivalent rms value. The 1.1 multiplier used by these instruments is based on the assumption that the waveform is sinusoidal, and that the rms value of a sine wave is 1.1 times the average value of the same sine wave.

5.3.1.3 Peak responding voltmeters

AC voltmeters that respond to the peak value of the waveform are also calibrated to display an rms value. The peak value of the waveform is detected and a multiplier is used to convert the peak value to the equivalent rms value. Like the average responding circuit, the waveform must be sinusoidal or the displayed value will be erroneous.

5.3.2 Current measurements

AC current measurements are slightly more difficult to perform during a site survey compared to voltage measurements, but there are many instruments available to simplify the process. This subclause will focus on the techniques and hardware used in conjunction with a metering

Copyright © 1999 IEEE. All rights reserved.

Copyright by the Institute Of Electrical & Electronics Engineers Inc
Fri Jul 20 10:36:15 2001

device to obtain current readings. As with voltage measurements, recommended practice is to use true rms-reading meters when performing a site survey because of the nonlinear nature of the electronic loads likely to be encountered. True rms ammeters include two types of indirect reading ammeters: current transformers and Hall-effect types.

5.3.2.1 Current-transformer (CT) ammeters

A transformer is commonly used to convert the current being measured to a proportionately smaller current for measurement by an ac ammeter. There is very little resistive loading with these ammeters, and when a split-core transformer is used, the circuit to be measured is not interrupted. Caution is recommended when interpreting readings obtained with a CT-type device because some of these ammeters may not be true-rms-reading meters.

The transformer inductively couples the current being measured to a secondary consisting of N turns of wire (N_S). If the current being measured is I, and if we assume the primary is equivalent to a single turn, the secondary current, I_s, is calculated as follows:

$$I_S = I/N_S \tag{5-1}$$

5.3.2.2 Hall-effect ammeters

The "Hall-effect" is the ability of semiconductor material to generate a voltage proportional to the current passed through the semiconductor, in the presence of a magnetic field. This is a "three-dimensional" effect, with the current flowing along the x-axis, the magnetic field along the y-axis, and the voltage along the z-axis. The generated voltage is polarized so that the polarity of the current can be determined. Both ac and dc currents can be measured.

Negative-feedback technology has eliminated (or greatly reduced) the effects of temperature variations and high-frequency noise on Hall-effect current probes. Hall-effect ammeters are affected by temperature variations (as is any semiconductor device) and by extreme high-frequency noise. Filtering is added to reduce this effect.

5.3.2.3 Direct-reading ammeters

Direct-reading ammeters employ a current shunt and carry some of the line current through them for measurement purposes. They are part of the circuit being measured. Direct-reading ammeters include electrodynamometer types, moving-iron-vane meters, and thermocouple types that drive dc-responding D'Arsonval meters. All of these ammeter types respond directly to the current squared, and are not true rms meters. The direct-reading ammeter does not lend itself well to the power quality site survey because the circuit to be measured must be broken to insert the device.

5.3.2.4 Current measurement considerations

When using a current measurement device, there are several factors that must be considered in order to insure that the intended measured parameter has been accurately obtained. These

Copyright © 1999 IEEE. All rights reserved.

Copyright by the Institute Of Electrical & Electronics Engineers Inc
Fri Jul 20 10:36:16 2001

include issues with dc currents, steady-state vs. transient measurements, and high crest-factor loads.

5.3.2.4.1 DC component on ac current

All the ac ammeters discussed here are capable of responding to ac currents with dc components. The low-frequency response of CT-type ammeters falls off rapidly as the dc component of the measured current increases. This is due to nonlinear characteristics of the core near the saturating region. Another possible effect of dc current arises from the fact that any magnetic core can become magnetized by passing relatively large dc currents through it. The result is a need for periodic degaussing.

5.3.2.4.2 Steady-state values

Most multimeters commonly used by the electrical industry are intended for providing steady-state values of current or voltage. The measured rms current or voltage is sampled or "averaged" over several cycles. By necessity, real-time meters cannot display cycle-by-cycle activity for a 60 Hz system. The response time of analog-meter movements is much greater than the 16 ms period of 60 Hz. In fact, digital meters deliberately delay updating the display to eliminate bothersome flicker that occurs with updates quicker than about 0.1 s.

Steady-state load current in all phases and neutral conductors should be measured with a true rms ammeter as per the wiring and grounding tests described in Chapter 6. Steady-state peak current should be measured with an oscilloscope and current probe or power monitor. Measurements with a moving coil or "peak hold" ammeter can give erroneous information.

5.3.2.4.3 Inrush and start-up current values

It is often desirable to accurately measure the transient currents and voltages that result from the turn-on of electronic loads and other equipment. For example, during start-up of an induction or dc motor, these initial currents can be several times the steady-state value.

To measure such brief currents, a fast-responding ammeter is required, along with a matching circuit to either display the peak current, or record it. It is also possible to use an oscilloscope or power monitor with a fast responding CT-type current probe.

Direct-reading ammeters are far too slow to respond to rapid changes. Both the CT-type and Hall-effect ammeters are capable of response up to hundreds of megahertz, or even gigahertz, although additional circuitry must be added to hold the desired peak values. In any case, the specifications of the probe and ammeter selected should be reviewed to insure that the current range and frequency response are within the window needed to accurately record the event in question.

5.3.2.4.4 Crest factor

The ratio of peak-to-rms current is known as *crest factor*. This measurement is important in the assessment of nonlinear loads. As an example, personal computers and many other loads

Copyright © 1999 IEEE. All rights reserved.

Copyright by the Institute Of Electrical & Electronics Engineers Inc
Fri Jul 20 10:36:17 2001

that use switchmode power supplies contain a bridge rectifier and storage capacitor. These loads can produce current waveshapes with typical crest factors of 2.5. When many of these loads are paralleled, the high crest factor contributes to the total harmonic distortion of both the voltage and current waveforms at the site.

Measurement instruments typically specify an accuracy limit when measuring high crest-factor loads. If a high crest factor is measured, it is important to make sure the instrument is capable of interpreting the waveshape correctly.

5.4 Descriptions of site survey tools

Site survey instrumentation can be divided into two categories. These categories are instruments used to

a) Measure or analyze power flow components such as voltage, current, energy, and harmonics;

b) Measure or verify the physical power delivery infrastructure such as grounding integrity, solid wiring connections, and proper wiring configuration.

The available measurement equipment commonly used to perform various portions of the power quality survey was shown in Table 5-1, along with the applicable analysis function. Subclauses 5.4.1 through 5.4.12 describe each tool with more detail as to the benefits or limitations associated with each instrument.

5.4.1 Infrared detector

The overheating of transformers, circuit breakers, and other electrical apparatus is often impossible to detect from current and voltage measurements. Infrared detectors produce images of the area under investigation. Overheated areas become apparent in contrast to normal temperature images. The availability of small handheld versions of these devices has made them more feasible for the power quality site survey.

5.4.2 Receptacle circuit testers

Receptacle circuit testers are devices that use a pattern of lights to indicate wiring errors in receptacles. These devices have some limitations. They may indicate incorrect wiring, but cannot be relied upon to indicate correct wiring especially in cases where poor connections exist.

5.4.3 Ground circuit impedance testers

Ground impedance testers are multifunctional instruments designed to detect certain types of wiring and grounding problems in low-voltage power distribution systems. Some instruments are designed for use on 120 V ac single-phase systems while others can be used on both single- and three-phase systems up to 600 V ac. The primary test function is impedance measurement of the equipment grounding conductor or neutral (grounded conductor) from

Copyright © 1999 IEEE. All rights reserved.

Copyright by the Institute Of Electrical & Electronics Engineers Inc
Fri Jul 20 10:36:18 2001

the point of test back to the source neutral-ground bond. Additional test functions include detection of wiring errors (e.g., reversed polarity, open equipment grounding conductor, and open neutral), voltage measurement, the presence of neutral-ground shorts, and isolated ground shorts.

5.4.4 Earth ground resistance testers

In practice, the resistance of the earth grounding electrode is tested when the building is inspected, following its construction, but at no other time. It is recommended that ground resistance tests be conducted with a fall-of-potential method instrument (see IEEE Std 81-1983 [B7]).

5.4.5 Oscilloscope measurements

In its simplest form, the oscilloscope is a device that provides a visual representation of a voltage plotted as a function of time. Even a limited-feature oscilloscope can be quite useful in detecting the presence of harmonics on an electrical system. The use of oscilloscopes in site surveys has become more popular with the introduction of lightweight, battery-operated handheld versions.

5.4.5.1 Line decoupler and voltage measurements

Voltage measurements are relatively straightforward using an oscilloscope. The input is connected to the voltage of interest with the appropriate lead. If a voltage above the range of the oscilloscope is to be examined, probes with resistance-divider networks are available to extend the range of the instrument by a factor of 10 or more. Capacitively coupled voltage step-down devices are also available. The frequency responses of the capacitively coupled voltage step-down devices are nearly constant from the power frequency to the lower radio-frequency range.

Care is advised when attempting single-ended voltage measurements on energized power conductors. Only phase-to-neutral or phase-to-ground voltages should be measured, such that the ground of the oscilloscope probe is never connected to a hot conductor. This condition could produce a hot chassis and a ground fault condition. Even if the scope is battery powered, care must be taken to insure that the use of two single-ended probes does not provide a fault path in the event that one of the probes is reversed. Two channels should be used to measure line-to-line voltages as a difference between the channels. Whenever possible it is recommended that a voltage isolator be used to measure power line voltages. The practice of opening the equipment ground at the oscilloscope power cord is strongly discouraged and is prohibited (see IEEE Std C62.45-1992).[2]

5.4.5.2 Clamp-on current transducer and current measurements

The oscilloscope cannot measure current directly, only a voltage produced as a current is passed through a resistance. Measurements of currents based on the use of a shunt (current-

[2]Information on references can be found in 5.6.

 Copyright © 1999 IEEE. All rights reserved.

Copyright by the Institute Of Electrical & Electronics Engineers Inc
Fri Jul 20 10:36:19 2001

viewing resistor) can be made with a differential input provided on oscilloscopes. If only a single-ended input is available, the signal is then applied between the high input and the oscilloscope chassis, creating a ground loop. Attempts are sometimes made to break this ground loop by disconnecting the equipment grounding conductor of the oscilloscope. As previously stated, this practice of "floating the scope" is a safety risk and is strongly discouraged.

Clamp-on current transformers provide a means of isolating the oscilloscope from the circuit being tested. Some models have a resistance in place across the secondary of the current transformer to facilitate use with test equipment. In cases where the user must supply the secondary resistor, the resistance should be kept to a minimum to prevent saturation of the current transformer core. If the core becomes saturated, the oscilloscope waveform will show a different harmonic content than is present in the primary circuit.

One bothersome characteristic of current transformers, in general, is a nonlinear frequency response. Typical current transformers give accurate current reproduction only over the range of 50 Hz to 3 kHz. Units with "flat" frequency response up through several kilohertz are available but costly. In some current probes, digital correction of frequency response is possible.

5.4.6 Power line monitors

Power monitors are a new class of instrumentation developed specifically for the analysis of voltage and current measurements (see Figure 5-1). Time-domain and limited frequency-domain measurements are possible. Where their cost can be justified, power monitors are recommended instruments for conducting site surveys or longer-term monitoring programs. Table 5-1 lists the measurements power line monitors can make. It is a matter of user preference as to whether power monitors that are likely to concentrate on wiring and grounding measurements should be employed in the early stages of a site survey. The multiple-featured power monitors often contain true rms voltage and current measurement capability, which is necessary for most of these measurements.

Although developed for the common application of detecting voltage aberrations that affect the operation of electronic equipment, it should be understood that simply because a power line variation was detected, the event was not necessarily damaging or disruptive to the load equipment. A few examples of typical power anomalies recorded by power line monitoring equipment can be found in Dorr [B5], Hughes and Chan [B6], and Sabin et al. [B11]. Power line monitors are of four basic types: event indicators, text monitors, wave-form analyzers, and steady-state power analyzers.

At present, there are no standards for categorizing types of events recorded by these power monitors. Consequently, the type of event recorded by different power monitors may vary from manufacturer to manufacturer. The IEEE Std 1159 Working Group on monitoring power quality has provided a set of terms to describe power line variations (see IEEE Std 1159-1995 [B8]). This recommended practice is likely to impact the future terminology used by power line monitor manufacturers to describe or categorize each kind of power line variation.

Copyright © 1999 IEEE. All rights reserved.

Copyright by the Institute Of Electrical & Electronics Engineers Inc
Fri Jul 20 10:36:20 2001

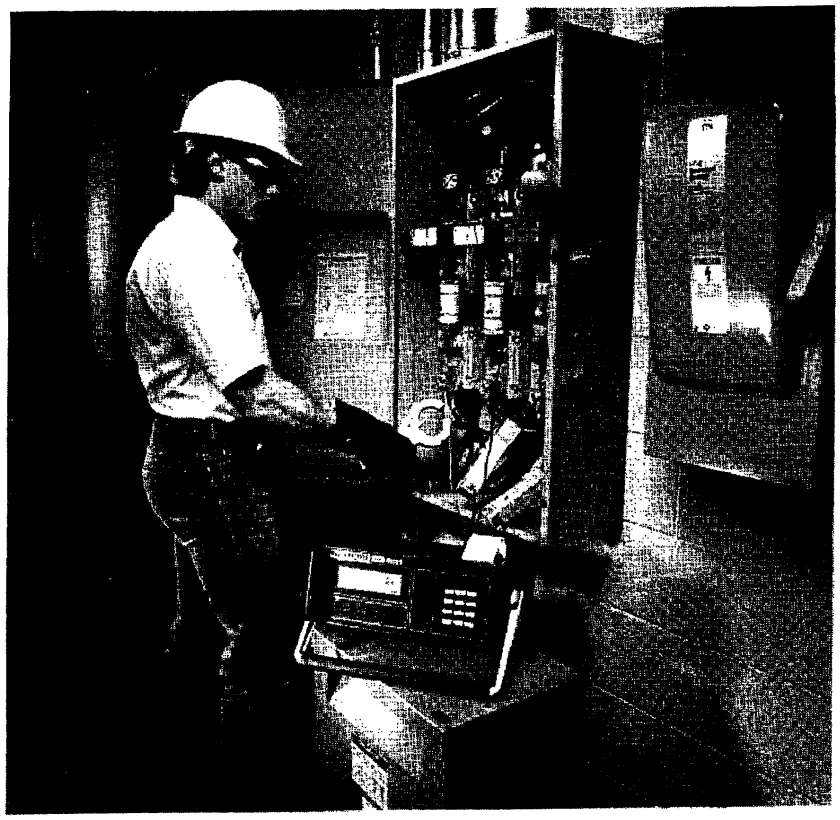

Caution

Workers involved in opening energized power panels are required to abide by the prescriptions of NFPA 70E-1995 [B10] concerning appropriate protective equipment, as well as government regulations codified in OSHA CFR 1910 [B2] and CFR 1926 [B3], and in the National Electrical Safety Code® (NESC®) (Accredited Standards Committee C2-1997 [B1].

Source: Courtesy of Angus Electronics Co.

Figure 5-1—Power line monitor

5.4.6.1 Event indicators

The simplest and least expensive types of power line monitors are known as event indicators. Event indicators detect, classify, and indicate power line variations when they occur. Individual events are not identified by time of occurrence. Data output consists of an illuminated display or alarm that indicates the prior occurrence of an event. Event indicators are recommended for identifying the need for additional power line monitoring with more sophisticated instrumentation.

Copyright © 1999 IEEE. All rights reserved.

Copyright by the Institute Of Electrical & Electronics Engineers Inc
Fri Jul 20 10:36:21 2001

5.4.6.1.1 Data capture techniques

Event indicators capture disturbance data by comparing the monitored parameter, usually ac voltage, to one or more threshold parameters. When the threshold parameter is exceeded, an event is detected and indicated. The comparison of monitored parameter to threshold parameter may be accomplished by analog techniques, digital techniques, or by combinations of analog and digital comparison circuits. Threshold parameters may be fixed or adjustable by the user over a specified range to accommodate different monitoring circumstances. Some examples of common threshold parameters include the following:

a) *AC rms voltage.* With rms sensing or average sensing, the measurement interval should be an integral number of half cycles of the fundamental power frequency. With peak sensing, the measurement interval should be one-half cycle of the fundamental power frequency.

b) *Surge (transient) voltage.* Peak detection should be used for disturbance events of short duration.

c) *Frequency.* The measurement interval should be small in comparison with the duration of the event to be measured.

Characteristics of threshold parameters determine the types of events that are detected. Therefore, a complete understanding of the threshold parameters of a given instrument is essential for proper application of the event indicator.

5.4.6.1.2 Recording and reporting mechanisms

Having detected the power line variation, event indicators store the data as a count, an amplitude, or both. Event data are then reported as a cumulative count or as an amplitude, possibly accompanied by blinking lights, audible alarms, or other forms of annunciation.

5.4.6.1.3 Analysis functions

Event indicators provide minimal analytical capability. The user is alerted to the prior occurrence of a disturbance event, but lacking descriptive information and time of occurrence of individual events, the user is unable to analyze causes or consequences of the events that occurred. Therefore, very little guidance concerning the nature and solution of the suspected ac power problem is possible.

5.4.6.2 Text monitors

Text monitors detect, classify, and record power line abnormalities. Individual events are recorded by time of occurrence and alphanumeric descriptions that are representative of events occurring during a given time interval. Data output may be reported on paper or electronic media, possibly accompanied by alarm annunciation.

Copyright © 1999 IEEE. All rights reserved.

Copyright by the Institute Of Electrical & Electronics Engineers Inc
Fri Jul 20 10:36:23 2001

5.4.6.2.1 Data capture techniques

Text monitors use threshold comparison techniques, which are similar to those of event indicators (see 5.4.6.1.3), to detect events. Monitored parameters are continually compared to one or more threshold parameters. When a threshold parameter is exceeded, an event is detected and numerous characteristics of the event may be stored. As with event indicators, threshold comparison may be analog or digital, fixed or adjustable over a specified range. Some examples of common threshold parameters are as follows:

a) *AC rms voltage.* With rms sensing or average sensing, the measurement interval should be one or more periods of the fundamental power frequency. With peak sensing, the measurement interval should be no more than one-half period of the fundamental power frequency.

b) *Surge (transient) voltage.* Peak detection should be used for disturbance events having short duration.

c) *Frequency.* The measurement interval can be less frequent than that for transients but should still be small with respect to the rms change being measured.

Characteristics of the threshold parameters determine the types of events that are detected. Therefore, a complete understanding of the threshold parameters and detection methods of a given instrument is essential for proper usage of the text monitor.

5.4.6.2.2 Recording and reporting mechanisms

The recording and reporting mechanisms of text monitors facilitate the incorporation of numerous measurement capabilities. When an event is detected, these measurements are recorded to comprise an alphanumeric description that is representative of the event. The accuracy of this alphanumeric representation depends upon measurement parameters, measurement techniques, and the extent of recorded detail. An extensive variety of measurements are possible, but the most common include the following:

a) *Time of occurrence.* The time that the event begins should be measured with as much precision as may be required for a given application. Specifications range from the nearest second to the nearest millisecond.

b) *AC rms voltage.* Each half-period of the fundamental power should be measured.

c) *Surge (transient) voltage.* Peak voltage amplitude measured with respect to the power frequency sine wave. Duration, rise time, phase, polarity, and oscillation frequency may also be measured.

d) *Frequency.* The measurement interval should be from 0.1 s to 1 s.

e) *Total harmonic distortion.* The measurement interval should be from 0.1 s to 1 s. Amplitude and phase of individual harmonic numbers may also be measured.

The text monitor stores all recorded characteristics of the event and then composes the measured data into an alphanumeric format that is representative of the original recorded event. A sequential series of alphanumeric descriptions is then reported to paper printout or electronic media.

Copyright © 1999 IEEE. All rights reserved.

Copyright by the Institute Of Electrical & Electronics Engineers Inc
Fri Jul 20 10:36:24 2001

Text monitors may have other features, beyond the five most common. Examples include common-mode noise detection, temperature, humidity, and dc voltage and current measurement.

5.4.6.2.3 Analysis functions

The sequential recording of events, with precise time of occurrence, by text monitors enables the user to correlate specific power line disturbances with misoperation or damage of susceptible equipment. Furthermore, the alphanumeric description of the event is useful in determining the cause and probable consequences. Other data contained within the alphanumeric description can be statistically related to determine the probability of various power line deviations occurring at the monitored site. Analysis functions are limited only by the extent of the alphanumeric description and by the skill and experience of the user. Therefore, the analysis capabilities of text monitors may be very extensive.

5.4.6.3 Waveform analyzers

Waveform analyzers are power line monitors that detect, capture, store, and record power line aberrations as complete waveforms supplemented by alphanumeric descriptions common to text monitors. The ability to capture, store, and recall waveforms makes the waveform analyzer the preferred choice for intensive analysis of ac power quality. Individual events are re-corded by time of occurrence with waveforms and alphanumeric measurements that are representative of events occurring during a given time interval. Data output may be reported on paper or electronic media, possibly accompanied by alarm annunciation.

5.4.6.3.1 Data capture techniques

Waveform analyzers use sampling techniques to decompose the ac voltage waveform into a series of discrete steps that can be digitally processed, stored, and eventually recombined to represent the original ac voltage waveform. Waveform sampling occurs continuously at a fixed or variable rate. High sampling rates result in better representation of the disturbance waveform and greater storage requirements.

Although waveform sampling is continuous, waveform analyzers store only the sampled data when an "out-of-bounds" event is detected. Event detection is determined by comparison of threshold parameters with the monitored parameter. As with text monitors, threshold comparison may be analog or digital, fixed or adjustable, over a specified range.

Due to the continuous waveform sampling, threshold comparison algorithms tend to be more complex than those of text monitors. However, this complexity provides tremendous flexibility in controlling the types of disturbance waveforms that are detected. As with all power disturbance monitors, a complete understanding of the threshold parameters and detection methods of a given instrument is essential for proper usage of the waveform analyzer. It should also be understood that the waveform analyzer processes data based on the assumption that proper wiring and grounding preexists.

Copyright © 1999 IEEE. All rights reserved.

Copyright by the Institute Of Electrical & Electronics Engineers Inc
Fri Jul 20 10:36:24 2001

5.4.6.3.2 Recording and reporting mechanisms

When an event is detected, the digitized samples are stored in memory. As subsequent processing, measurement, and reporting of the event will be based entirely upon the stored samples, the waveform analyzer must retain sufficient data from before and after the detection point to accurately reconstruct the entire power line variation.

Having captured and stored the digitized data, the waveform analyzer is able to compute numerous parameters related to an event. These measurements of power quality characteristics are at least as extensive and as accurate as those available from text monitors. Furthermore, the digitized data can be formatted to provide a detailed graphic representation of the waveform associated with the recorded event.

This graphic reporting may be accomplished by paper printout or electronic media such as magnetic tape, diskettes, and cathode-ray tube (CRT) displays. With accuracy of the graphic and alphanumeric representation of the event limited only by measurement techniques and storage capacity, waveform analyzers can provide the most complete description of a power line variation that is practical from a power analyzer.

5.4.6.3.3 Analysis functions

The graphic reporting of the recorded waveform enables the user to perform several additional analysis functions. First, the time-based correlation of disturbance waveforms with misoperation of electronic equipment can facilitate more meaningful susceptibility testing followed by corrective design improvements. These design improvements, both at the system and equipment levels, can lead to improved immunity against disturbing types of ac power line variations. Second, the characteristic waveform of certain disturbance sources can facilitate the identification, location, and isolation of these disturbance sources. These analytical functions make the waveform analyzer most suitable for analyzing complex power quality problems when properly applied by the knowledgeable user.

5.4.6.4 Steady-state power analyzers

A counterpart to the transient event analyzer is the steady-state type, which is very useful in performing analysis of the nominal energy demand characteristics of a facility. By sampling voltage and current on multiple channels, these monitors can display or calculate a large number of power line or load parameters such as voltage, current, distortion power factor, displacement power factor, watts, volt-amperes, reactive volt-amperes, total harmonic voltage distortion, total harmonic current distortion, phase imbalance, and efficiency.

5.4.6.4.1 Data capture techniques

Steady-state analyzers use sampling techniques to decompose the ac voltage waveform into a series of discrete steps that can be digitally processed, stored, and eventually recombined to represent the original ac voltage waveform. Waveform sampling occurs at a fixed or variable rate. Although waveform sampling is continuous, steady-state analyzers only update their display or readout every second or so to eliminate nuisance toggling of reported values.

 Copyright © 1999 IEEE. All rights reserved.

Copyright by the Institute Of Electrical & Electronics Engineers Inc
Fri Jul 20 10:36:26 2001

5.4.6.4.2 Recording and reporting mechanisms

The steady-state analyzer is able to compute numerous parameters based on the sampling of voltages and currents. The reporting mechanism is typically a digital display and an additional paper-tape printout is usually available.

5.4.6.4.3 Analysis functions

The reporting of numerous power flow parameters enables the user to gain valuable insight into the characteristics of load and power distribution. The signature waveforms of certain loads can facilitate the identification, location, and isolation of these loads when they are found to be disturbing to parallel equipment. These analytical functions make the steady-state power monitor most suitable for analyzing site and load characteristics when properly applied by the knowledgeable user.

5.4.7 Harmonic measurements

In order to obtain measurements of harmonic distortion relative to the power frequency, a true rms sample of the voltage or current of interest is required. The most popular method is to obtain a digitized sample of the waveshape and perform a fast Fourier transform (FFT) computation. The result of the FFT analysis yields the percentages for the fundamental frequency and for the multiples of the fundamental. Power line waveshape analyzers and oscilloscopes with FFT options are popular choices to perform this harmonic analysis.

Low-frequency or broadband spectrum analyzers may also be used to perform harmonic analysis. The newest devices available to measure harmonics are lightweight handheld instruments, similar in size to a multimeter, which are capable of both waveshape display and harmonic analysis.

5.4.8 Expert systems

Knowledge-based and expert-system software are available for recording and analyzing power quality site survey data and reporting the results.

5.4.8.1 Data collection techniques

Expert systems use data input by the user, data encoded as procedures or as rules, and possibly data from instrumentation. Embedded and other instrumentation-based expert systems have data capture (of collected data) mechanisms that are specific to the instrument being used. Instrument-independent expert systems collect data by presenting questions to the user for response. Both instrumentation-based and instrument-independent expert systems use data encoded in the form of knowledge structures to process measurement or input data.

5.4.8.2 Recording and reporting mechanisms

Measurements and user-input data are typically recorded onto mass storage media. Communications interfaces may be used to accomplish data recording. A common technique in data

Copyright © 1999 IEEE. All rights reserved.

Copyright by the Institute Of Electrical & Electronics Engineers Inc
Fri Jul 20 10:36:27 2001

recording is to store the data in an electronic database that can be accessed by the expert system. Processed data and analysis results are reported on the computer screen or by means of printed reports. Reports typically include tutorial information explaining the expert system's reasoning.

5.4.8.3 Analysis functions

Expert systems for power quality analysis differ in scope and depth; hence, in analysis capabilities. Embedded and instrument-based expert systems are designed to assist in the analysis of specific measured data, including one or more types of power disturbance. Expert systems that are not instrument-dependent have broader scope, but perhaps less depth relative to analyzing measured data. Site survey analysis software is an example of this type of expert system, the scope of which includes wiring, grounding, surge protection, power monitoring, data analysis, and power conditioning equipment recommendation.

Expert systems can provide consistency and help in the collection, analysis, and reporting of power quality data if appropriately applied by the user.

5.4.9 Circuit tracers

Location of a specific phase or breaker may be easily accomplished with a circuit tracer. Various methods are used to draw or inject a special frequency or signal at the receptacle to be traced. A receiver is then used back at the panel box to detect the signal. Typically the receiver will have an adjustable gain so that the circuit in question can be pinpointed.

5.4.10 Electrostatic discharge

Electrostatic charge can be measured with special handheld meters designed for that purpose.

5.4.11 Radio-frequency interference (RFI) and electromagnetic interference (EMI)

Electric and magnetic field probes measure broadband field strength. A field-strength meter equipped with a suitable probe for electric or magnetic field sensing can be used to assess RFI or EMI more generally.

5.4.12 Temperature and relative humidity

Measure temperature and relative humidity with a power monitor equipped with special probes. The rate of change of these parameters is at least as important as the absolute values of the temperature and relative humidity.

5.5 Measurement considerations

There are several factors related to either capabilities or limitations of measurement equipment that must be taken into consideration before deciding upon the appropriate instrument

 Copyright © 1999 IEEE. All rights reserved.

Copyright by the Institute Of Electrical & Electronics Engineers Inc
Fri Jul 20 10:36:28 2001

for a given measurement. These factors include, but are not limited to bandwidth, sampling rate, refresh rate, resolution, and true rms response capability. These general considerations to be aware of are described in 5.5.1, 5.5.2, 5.5.3, and 5.5.4. Caution should be exercised when choosing instrumentation to investigate a problem. For example, though a transient is not recorded by a waveform analyzer it cannot be assumed that no transient occurred, unless it is certain that the bandwidth, sampling rate, and resolution are such that the transient was within the instrument's capture capabilities.

5.5.1 Bandwidth

The frequency spectra within which accurate measurements can be obtained is limited to the bandwidth of the equipment being used. The bandwidth of the instrument used should be wider than the frequency spectra of the expected events to be monitored. For 60 Hz steady-state monitoring this bandwidth issue is likely not a problem, but if the event of interest is a high-frequency transient caused by a switching event or by a lightning surge, the bandwidth must be higher than the rise time of the event to be captured (typically MHz ranges).

5.5.2 Sampling rate

This specification is important when the power waveshape in question must be digitized in order to perform computational analysis. The sampling rate should be at least twice the highest frequency of interest for a given computation. For example, a harmonic analysis out to the 50th harmonic (3000 Hz) would require a sampling rate of at least 6000 Hz. For sampled data, anti-aliasing filters built in to the metering device are typically necessary to insure accuracy of the reported information.

5.5.3 Resolution

The vertical resolution of a waveshape is dependent upon the sampling rate as well as the number of bits available for storage or processing of the acquired sample. Most digitizing instruments utilize at least 8 bits to obtain reasonable vertical resolution. This yields measurement accuracy roughly within ±3% of the actual value for ac voltage waveshapes.

5.5.4 True rms considerations

It is extremely important to understand the potential limitations of the instrumentation being used to measure either voltage or current. Table 5-2 and Table 5-3 illustrate the point that there can be considerable differences in the displayed or reported quantities for different types of instruments. Table 5-2 shows the differences one might encounter when measuring some typical waveshapes with several popular handheld multimeters. Note that only the true rms type meter was able to correctly report the actual rms value for all of the waveshapes.

Because the electrical environment contains loads that are typically nonlinear in nature, it is recommended practice to use true rms measurement equipment to monitor voltage and current parameters.

Copyright © 1999 IEEE. All rights reserved.

Copyright by the Institute Of Electrical & Electronics Engineers Inc
Fri Jul 20 10:36:29 2001

Table 5-2—Displayed values from different meters for some typical current waveforms

Meter type	Circuit	Sine wave	Square wave	Distorted wave	Light dimmer	Triangle wave
		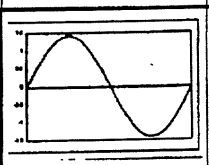	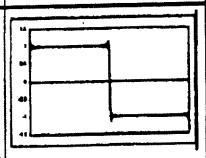	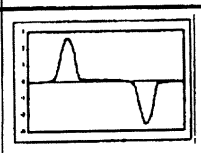	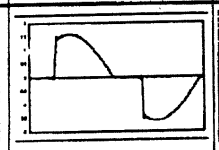	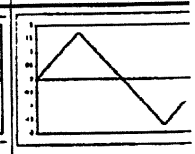
Peak method	Peak/1.414	100%	82%	184%	113%	121%
Average responding	Sine avg. × 1.1	100%	110%	60%	84%	96%
True rms	RMS converter	100%	100%	100%	100%	100%

Table 5-3—Reported event magnitude and duration for some common power line monitors

Event description	Possible text reported or response by monitor A	Possible text reported or response by monitor B	Possible text reported or response by monitor C
Capacitor switching transient	May miss the event if thresholds are set incorrectly	Reported as a transient with amplitude equal to the initial falling edge value	May report the event as both a subcycle variation and as a transient
1/4 cycle interruption (dropout)	May miss the event if thresholds are set incorrectly	Reported as a sag to 50% of V_{nom} with duration of 10 ms	Reported as a sag to 90% of V_{nom} with duration of 100 ms
1 cycle interruption	Reported as a 1 cycle interruption	Reported as an interruption with duration 20 ms	Reported as a sag to 83% of V_{nom} with duration of 100 ms
Extraneous zero crossings	Reports multiple transients with same amplitude	Reports multiple transient events with same amplitude and may report frequency variations	Reports multiple transient events with same amplitude and may report frequency variations
10 cycle voltage sag to 80% of V_{nom}	Reports voltage sag to 80% of V_{nom} with duration of 10 cycles	Reports voltage sag to 80% of V_{nom} with duration of 10 cycles	Reports voltage sag to 80% of V_{nom} with duration of 10 cycles

Copyright © 1999 IEEE. All rights reserved.

Copyright by the Institute Of Electrical & Electronics Engineers Inc
Fri Jul 20 10:36:30 2001

Table 5-3 illustrates the differences that one might encounter when analyzing the text reports from several common power line monitors. Note that even though all of the monitors are true rms type the reported text is not the same (even when the graphical display is).

The point of Table 5-3 is not to find fault in any particular monitor brand, but merely to point out that there can and will be differences in the way the various monitor brands capture and report short duration events (microseconds to several cycles). Therefore, the user of a particular monitoring instrument should become familiar enough with that instrument to be able to correctly interpret the information that is collected and recognize the fact that two different instruments connected at the same point may not capture and report events identically.

Provided the event is within the capture capability of the monitor, and the printed or displayed waveform has enough resolution to display the captured event clearly, actual capture of the graphical voltage or current waveshape is the best way to insure that a monitored event is truly what was reported.

5.5.5 Instrument calibration verification

As a final point for consideration, it is recommended that measurement equipment be calibrated periodically to insure accuracy. It is also a good practice to periodically compare the readings of the site survey instruments to a second piece of equipment that is known to read accurately. This is particularly important when the measuring devices are frequently shipped or transported to survey locations. Mishandling of the equipment during shipping can cause it to become less accurate. Simply having a valid calibration sticker does not necessarily guarantee accuracy.

5.6 Reference

This recommended practice shall be used in conjunction with the following publication. When the following standard is superseded by an approved revision, the revision shall apply.

IEEE Std C62.45-1992 (Reaff 1998), IEEE Guide for Surge Testing for Equipment Connected to Low-Voltage AC Power Circuits.[3]

5.7 Bibliography

Additional information may be found in the following sources:

[B1] Accredited Standards Committee C2-1997, National Electrical Safety Code® (NESC®).[4]

[3]IEEE publications are available from the Institute of Electrical and Electronics Engineers, 445 Hoes Lane, P.O. Box 1331, Piscataway, NJ 08855-1331, USA (http://www.standards.ieee.org/).

[4]The NESC is available from the Institute of Electrical and Electronics Engineers, 445 Hoes Lane, P.O. Box 1331, Piscataway, NJ 08855-1331, USA (http://www.standards.ieee.org/).

Copyright © 1999 IEEE. All rights reserved.

Copyright by the Institute Of Electrical & Electronics Engineers Inc
Fri Jul 20 10:36:31 2001

[B2] CFR 29, Part 1910, Occupational Safety and Health Standards (OSHA).[5]

[B3] CFR 29, Part 1926, Safety and Health Regulations for Construction (OSHA).

[B4] Clemmensen, Jane M., "Power Quality Site Survey Instrumentation and Measurement Techniques," *IEEE I&CPS (1990),* Paper No. 90CH2828-2/90/000-0126.

[B5] Dorr, D. "Point of Utilization Power Quality Study Results," *IEEE Transactions on Industry Applications,* vol. IA-31, no.4, July/Aug. 1995.

[B6] Hughes, M.B., and Chan, J. S., "Canadian National Power Quality Survey Results," *Proceedings of EPRI PQA '95,* New York, New York, May 9–11, 1995.

[B7] IEEE Std 81-1983, IEEE Guide for Measuring Earth Resistivity, Ground Impedance, and Earth Surface Potentials of a Ground System.

[B8] IEEE Std 1159-1995, IEEE Recommended Practice for Monitoring Electric Power Quality.

[B9] Melhorn, Christopher J., and McGranaghan, Mark F. , "Interpretation and Analysis of Power Quality Measurements," *IEEE Transactions on Industry Applications,* vol. 31, no. 6, pp. 1363–1370, Nov./Dec. 1995.

[B10] NFPA 70E-1995, Standard for Electrical Safety Requirements for Employee Workplaces.[6]

[B11] Sabin, D. D., Grebe, T. E., and Sundaram, A., "Surveying Power Quality Levels on U.S. Distribution Systems," *Proceedings 13th International Conference on Electricity Distribution* (Cired 95), Brussels, Belgium, May 1995.

[5]CFR publications are available from the Superintendent of Documents, U.S. Government Printing Office, P.O. Box 37082, Washington, DC 20013-7082, USA.

[6]NFPA publications are available from Publications Sales, National Fire Protection Association, 1 Batterymarch Park, P.O. Box 9101, Quincy, MA 02269-9101, USA (http://www.nfpa.org/).

Copyright © 1999 IEEE. All rights reserved.

Copyright by the Institute Of Electrical & Electronics Engineers Inc
Fri Jul 20 10:36:32 2001

Chapter 6
Site surveys and site power analyses

6.1 Introduction

Electronic systems and equipment may be more sensitive to disturbances in the ac power system than are conventional loads. The effects of power disturbances on electronic load equipment can take a wide variety of forms, including misoperation, data transfer errors, system halts, memory or program loss, and equipment damage. In many cases it is difficult to determine whether the system hardware and software malfunctions are actually caused by disturbances in the power system supplying the equipment, since frequently these symptoms are identical to those resulting from other causes. For this reason, it is necessary to perform some level of survey and analysis of the ac power system to determine the cause. The site survey is the primary tool utilized in locating the source of the disturbance.

6.2 Objectives and approaches

The basic objectives of surveys and site power analyses are as follows:

— Determine the soundness of the premises wiring and grounding system supplying the equipment.

— Determine the quality of the ac voltage supplying the equipment.

— Determine the sources and impact of power system disturbances on equipment performance.

— Analyze the survey data to identify cost-effective improvements or corrections, both immediate and future.

It is important to keep these approaches in mind when a site is experiencing problems that appear to be power-related. All too often, corrective action (in the form of some type of power conditioning equipment) is installed in a hurried attempt to solve the problem. Although this method will sometimes minimize the problem, in other cases it may do little or nothing to solve the problem and can even aggravate conditions resulting in further degradation of system performance levels.

To successfully resolve problems in the power system serving electric loading equipment, a thorough analysis of the power system and loads should be conducted to define the areas of concern as accurately as possible before attempting to solve the problem. This approach can enable cost-effective solutions to be implemented that not only correct the existing conditions but also minimize future problems.

The key is to understand and define the problem before attempting to solve it. The following are some of the parameters that need to be defined:

Copyright © 1999 IEEE. All rights reserved.

Copyright by the Institute Of Electrical & Electronics Engineers Inc
Fri Jul 20 10:36:33 2001

a) When did the problem start?

b) What type of equipment is experiencing problems? A secondary concern to this question would be determining the sensitivity of the device.

c) What types of equipment malfunctions or failures are occurring (e.g., data loss, lockups, component damage)?

d) When do the problems occur (e.g., time of day, day of week, particular system operation)?

e) Are coincident problems occurring at the same time (e.g., lights flicker and motor slowdown)?

f) What are the possible problem sources at site (e.g., arc welders, air conditioning, copy machines)? What is the proximity to the equipment?

g) Is there any existing or recently installed protection for equipment (e.g., transient voltage surge suppressor, or isolation transformer)? This would be necessary to determine if the premises wiring system or the equipment is compatible with the mitigating device.

h) Has the addition of protection or power conditioning equipment alleviated the problem or made it worse?

i) Are there any possible environmental concerns [e.g., lightning, electrostatic discharge (ESD), and radio-frequency interference/electromagnetic interference (RFI/EMI)]?

j) Are there any recent changes to the premises wiring distribution system (e.g., ground scheme, additional electrical service entrances, and equipment relocation)?

k) Are there any recent changes to the electric utility's distribution system?

These parameters should provide information for a preliminary analysis to decide if immediate recommendations for remedial action can be taken.

6.3 Coordinating involved parties

Generally, it is the responsibility of the end user, electronic equipment owner, or the building owner to provide and maintain a proper supply of ac power from the utility service entrance to the equipment. In addition to the end-use equipment owner, other involved parties should be informed as to the objectives of the site survey. Effective communication between these parties can help ensure that the recommendations for improvement or correction may be implemented in a mutually acceptable manner.

6.3.1 Equipment user or owner

The user of electronic equipment is primarily concerned with the productivity of the equipment. Downtime translates into loss of production, increased operating costs, and decreased revenues and profits. Technical details on power disturbances are normally of little interest to the end user who cares only that the equipment is not performing as intended and it is costing the company money. It is often necessary to educate the equipment user or owner so they may realize that it is in their best interest to provide and maintain a sound power source to operate

 Copyright © 1999 IEEE. All rights reserved.

Copyright by the Institute Of Electrical & Electronics Engineers Inc
Fri Jul 20 10:36:34 2001

the equipment. Keeping an accurate log of equipment errors and malfunctions can provide valuable information in solving site power problems. This log should include the time and date of the disturbance as well as the type of equipment and associated error messages.

6.3.2 Electronic equipment manufacturer/supplier

Initially, it is the responsibility of the equipment manufacturer or supplier to provide the power, grounding, and environmental specifications and requirements for their equipment. If this has not been done, the effectiveness of the service representative may be reduced when a power-related problem develops since it is the service engineer who normally determines the problem and relates this information to the end user.

When the problem areas have been defined, the recommended methods of correction should be clearly communicated to the end user so that an incorrect or partial solution does not occur. For example, some equipment manufacturers require a grounding system for their equipment that may not conform to the National Electrical Code® (NEC®) (NFPA 70-1999).[1] Although grounding practices that go beyond the NEC requirements may be necessary for electronic equipment to operate properly, it is never acceptable to violate the NEC.

6.3.3 Independent consultant

In many cases, a practical approach is to enlist the services of an independent consultant who specializes in solving power quality problems. The judgment and opinions of a qualified, independent consultant are normally acceptable to both the end user and the equipment manufacturer/supplier.

Care should be used in the selection of the consultant to ensure that the consultant has experience in solving power quality problems for electronic equipment and does not have a vested interest in the recommended solution. For example, vendors of power conditioning equipment may have significant experience in solving power quality problems but their recommended solutions may be biased toward their product line.

It is also recommended that a written agreement be reached with the consulting company that pertains to what they will, or will not, do regarding their services (i.e., time frame to complete the work, the cost of the survey, etc.)

6.3.4 Electrical contractor or facility electrician

The facility electrician or an electrical contractor is a necessary assistant in the verification of the power distribution and grounding system for the layout of the power system feeders, branch circuits, and panelboards. They may have knowledge of the electrical system and recent changes (e.g., wiring/grounding and equipment additions) that could provide clues to locating the problem. In addition, the electrician is essential for performing work necessary to correct or improve unsatisfactory wiring and grounding conditions.

[1]Information on references can be found in 6.9.

Copyright © 1999 IEEE. All rights reserved.

Copyright by the Institute Of Electrical & Electronics Engineers Inc
Fri Jul 20 10:36:34 2001

6.3.5 Electric utility company

An effective site survey should include the involvement of the local electric utility. Utility personnel can provide site-specific information on disturbances (e.g., capacitor bank switching, and distribution circuit interruption history and reliability) that can occur on the utility system. Many power companies have an established power quality department whose staff includes engineers that have expertise on effects of power quality problems on electronic equipment.

It is important to involve someone familiar with the local power system and the various factors that affect power quality from location to location. The utility engineer can fill this role in evaluating which disturbances may occur on the utility system and which protective equipment may be required by the user. Potential changes to the utility system that may improve power quality can also be evaluated. Some electric utilities offer preliminary site surveys prior to construction of facilities or installation of electronic loads. The monitoring equipment used can provide useful data on power disturbances at the point of common coupling. A growing number of utilities offer in-depth site surveys to pinpoint the source of power disturbances and, if necessary, provide assistance in selection of the appropriate power conditioning equipment. In many areas, electric utility companies have recognized the importance of power quality and are taking an active role in helping their customers solve power-related problems.

6.4 Conducting a site survey

Site surveys and analyses can be conducted in various levels of detail depending on the magnitude of the problem, amount of data desired, and economic factors.

A recommended breakdown of site survey levels is as follows:

— *Level 1 survey.* Visual inspection, testing, and analysis of ac distribution and grounding system supplying the equipment.

— *Level 2 survey.* Level 1 plus monitoring of applied ac voltage and load current for the equipment.

— *Level 3 survey.* Levels 1 and 2 plus monitoring of site environmental parameters.

It is important to note that the systematic approach in performing the survey and promptly locating the cause of the problem will almost always depend upon

a) *The experience of the survey team member(s).* The more experience an individual has in solving problems pertaining to varying electrical environments (e.g., telecommunications, health care, and commercial/industrial), the greater the flexibility in successfully altering investigative methods to quickly locate and/or confirm the problem source.

b) *The type of industry and environment in which the survey will be performed.* For example, the survey practices to discern the cause of nuisance circuit-breaker tripping and overheated transformers for adjustable-speed drives may entail an entirely

Copyright © 1999 IEEE. All rights reserved.

Copyright by the Institute Of Electrical & Electronics Engineers Inc
Fri Jul 20 10:36:36 2001

different procedure than used to find the cause of random computer failures within a commercial office building. The former may require a detailed harmonic analysis and the latter may require an investigation of the wiring and grounding system.

The level of the survey performed is a combination of how quickly the problem is located and the severity of the problem. In many cases, a Level 1 survey locates and corrects the problem. If it does not readily identify the cause, then the survey progresses to a Level 2 (or 3) as needed. When the desired level of the survey has been determined, the proposed analysis of results should be defined before any testing or power monitoring is initiated. Specific types of instruments are designed to detect specific problems and no single instrument has the capability to detect all types of problems. For example, a power monitor is designed to detect problems in the quality of the ac voltage; it will not detect wiring or grounding problems. Unless the quality of the wiring and grounding system is tested and verified, the data produced by a power monitor can be practically useless. Therefore, it is important that all premises wiring and grounding deficiencies be corrected before engaging in power line monitoring.

To conduct a site survey effectively, problem areas should be subdivided into at least three categories:

— The condition of the ac premises wiring and grounding system;

— The ac voltage and current levels of the power system;

— The equipment environment, including temperature, humidity, ESD, and radiated EMI and RFI disturbances.

The order in which these categories are analyzed is critical. Premises wiring and grounding should be tested and analyzed before any testing is conducted to determine the quality of the ac voltage and equipment environment. In many instances, the problem could be eliminated by employing proper wiring and grounding, thus making voltage and current monitoring no longer necessary.

6.4.1 Condition of the premises wiring and grounding system

Problems in industrial/commercial premises wiring and grounding account for a large share of all reported power quality problems. The greatest number of wiring and grounding problems is in the feeders and branch circuits serving the critical loads. The first activity in checking for power problems is to survey the integrity of the premises wiring and grounding system supplying the equipment. Problems in this category include such items as missing, improper, or poor-quality connections in the power wiring and grounding from the source of power to the load. They can be generally classified as mechanical problems. Through error or oversight, intentional or unintentional, the premises wiring and grounding system in many cases is not installed in accordance with the requirements of national, state, or local electrical codes and other specifications. For example, the NEC only permits a neutral-ground bond at the source of power (service entrance or transformer secondary of a separately derived system), yet improper neutral-ground connections are a common problem encountered on power systems in the field. Experience has shown that many electronic-equipment installations experiencing

Copyright © 1999 IEEE. All rights reserved.

Copyright by the Institute Of Electrical & Electronics Engineers Inc
Fri Jul 20 10:36:37 2001

malfunctions and failures have one or more problems in the premises wiring and grounding system supplying the equipment.

Once the installation has been placed in service, vibration can loosen connections. Loads cycling on and off create heating and cooling that can eventually result in poor-quality (high-impedance) connections. Also, periodic additions or modifications to the distribution system can result in missing, improper, or poor-quality connections.

Branch circuits are of lower power rating and are open to a greater variety of construction techniques and retrofit options, many of which cause problems. Caution should be exercised in the selection of test instruments used to conduct a verification of the power and grounding system. Use of the commonly available three-light circuit tester is not recommended and should be discouraged. These devices have some severe limitations and can provide a "correct" indication when the circuit being tested actually has one or more problems. In addition, they are incapable of indicating the integrity of the power conductors.

See Chapter 5, Table 5-1, for a discussion of recommended instruments to conduct the site survey.

6.4.1.1 Safety considerations

Safety considerations come first when making measurements on energized power systems. Some safety issues to consider are

a) The use of safety gloves and safety glasses—OSHA requires electrical maintenance workers/electricians to complete basic electrical safety and first-aid training courses prior to working on energized ac electrical systems.

b) Working in pairs—an extra person can review test-equipment configurations, review test results, secure the test location while another person performs the actual measurements, and provide emergency medical assistance when necessary.

c) Instruments should be used and grounded using the manufacturer's recommendations.

d) Continuity measurements should be made on de-energized circuits. Some measurements may require the use of licensed or qualified electrical personnel.

WARNING

Workers involved in opening energized power panels are required to abide by the prescriptions of NFPA 70E-1995 [B14] concerning appropriate protective equipment, as well as government regulations codified in OSHA CFR 29 Part 1910 [B3] and CFR 29 Part 1926 [B4].

 Copyright © 1999 IEEE. All rights reserved.

Copyright by the Institute Of Electrical & Electronics Engineers Inc
Fri Jul 20 10:36:38 2001

6.4.1.1.1 Neutral-ground bond

The neutral and equipment grounding conductor are required by the NEC to be bonded at the main service panel and at the secondary side of separately derived systems. Improper, extraneous neutral-ground bonds are a relatively common problem that not only create shock hazards for operating personnel, but can also degrade the performance of electronic equipment. Improper neutral-ground bonds at receptacles can often be detected using a wiring and grounding tester designed for that purpose.

A voltmeter can also be used to indicate if improper bonds exist at receptacles. A voltage measurement between neutral and ground at the outlets can indicate voltage ranging from millivolt to several volts under normal operating conditions and depending on loading, circuit length, etc. However, a reading of 0 V can indicate the possible presence of a nearby neutral-ground bond. Excessive current on equipment grounds in distribution panels also indicates the possibility of a load-side neutral-ground bond. Visual inspection of the neutral bus within distribution panelboards is necessary to verify and locate these bonds.

6.4.1.1.2 Measurements for neutral conductor sizing

Measurements of load phase and neutral currents should be made to determine whether the load is sharing a neutral conductor with other loads and whether the neutral conductor sizing is adequate. For three-phase circuits supplying single-phase loads that have nonlinear current characteristics and share a common neutral, current in the neutral can exceed current in the phase conductor. This should be taken into account when sizing neutral conductors. Phase and neutral conductor measurements must be made with a true rms clamp-on ammeter to avoid inaccurate readings.

6.4.1.1.3 Transformer sizing

Procedures for ensuring proper transformer sizing must include the measurement of true root-mean-square (RMS) voltages (phase/phase and phase/neutral), true RMS currents (phases and neutral), and the harmonic analysis of the loads being served. The harmonic analysis of the voltages and the currents at the transformer determine the additional losses within the core and windings where nonlinear loads are being served. Chapter 8 discusses transformer derating for nonlinear loads or situations in which the load type cannot be determined in advance.

6.4.1.1.4 Equipment grounding conductor impedance

Electronic equipment is required by the NEC and local codes to be grounded through the equipment grounding conductor and bonded to the grounding electrode system at the power source. Impedance of the equipment grounding conductor from the electronic equipment back to the source neutral-ground bonding point is a measure of the quality of the fault return path. Impedance of the insulated equipment grounding conductor that is used for isolated grounding (IG) schemes and the metallic conduit in which the IG and circuit conductors are contained must both be tested for a low grounding impedance.

Copyright © 1999 IEEE. All rights reserved.

Copyright by the Institute Of Electrical & Electronics Engineers Inc
Fri Jul 20 10:36:39 2001

Measure the impedance of the equipment grounding conductor using a ground impedance tester. An "open ground" indication reveals no equipment grounding conductor connection. A high-impedance measurement indicates poor-quality connections in the equipment grounding system or an improperly installed equipment grounding conductor. Properly installed and maintained equipment grounding conductors will exhibit very low impedance levels. Recommended practice is to verify an impedance level per Table 6-1. Achieving these levels based on the amperage rating of the overcurrent device for the feeder or branch circuit will also help assure personnel protection under fault conditions (see Kleronomos and Cantwell [B10][2]). In many cases, with larger-sized equipment grounding conductors, the impedance could be much less than the prescribed levels in Table 6-1.

6.4.1.1.5 Neutral conductor impedance

Impedance of the neutral conductor from the electronic equipment back to the source's permissible neutral-ground bonding point is another important measurement. A low-impedance neutral is essential to minimize neutral-ground potentials at the load and reduce common-mode noise. The high levels of neutral current created by phase imbalance and nonlinear power supply operation contribute to these problems.

The instrument used to conduct the equipment ground impedance measurements in 6.4.1.1.4 may also be used to measure the neutral conductor impedance. The impedance level of the neutral conductor should be based on the feeder or branch circuit ampacity. The frequency of the load circuit should also be considered where a conductor may exhibit varying levels of impedance where harmonic currents are present. High impedance in the neutral conductor can be the result of poor-quality connections.

6.4.1.1.6 Grounding electrode resistance

The purpose of the grounding electrode system is to provide an earth reference point for the facility. This may allow stable line-to-ground voltages as well as establishing a 0 V reference for non-current-carrying conductors. Earthing also provides a path for lightning and static electricity discharge currents. The grounding electrode system is typically buried or inaccessible except during construction of the facility or major remodeling.

The resistance of the grounding electrode system should be checked at the time of construction. As a practical matter and for safety reasons, it is usually not measured again. In order to take the measurement accurately, the grounding electrode system should be disconnected from all other earth grounds. For new construction, measure the resistance of the grounding electrode system with an earth ground tester using the fall-of-potential method (see IEEE Std 81-1983 [B8] and Michaels [B13]).

[2]The numbers in brackets correspond to the bibliography in 6.10.

 Copyright © 1999 IEEE. All rights reserved.

Copyright by the Institute Of Electrical & Electronics Engineers Inc
Fri Jul 20 10:36:40 2001

Table 6-1—Impedance values in *Z* for effective grounding of systems and equipment rated 600 V or less

Overcurrent device rating (A)	Circuit voltage to ground	
	120 V	277 V
10	1.6	—
15	1.0	1.0
20	0.8	0.7
25	0.6	0.6
30	0.5	0.5
40	0.4	0.3
60	0.10	0.10
100	0.10	0.07
125	0.06	—
150	0.05	—
200	0.04	—
250	—	—
300	—	—
400	—	—
500	—	—
600	—	—
800	—	—
1000	—	—
1200	—	—

Copyright © 1999 IEEE. All rights reserved.

Copyright by the Institute Of Electrical & Electronics Engineers Inc
Fri Jul 20 10:36:41 2001

The integrity of the grounding electrode conductor is important because it serves as the connection between the building grounding system and the grounding electrode system. To verify a conductive connection to an earthing reference, use a clamp-on ammeter to measure current flow in the grounding electrode conductor. Ordinarily there may be a small but finite current flow. A lack of current flow may be an indication of an open connection. Current flow on the order of the phase currents may indicate serious problems within the premises wiring system.

WARNING

Interrupting the current in grounding electrode conductor paths can be a shock hazard and should not be attempted.

6.4.1.1.7 Two-point bonding testing between multiple earthing references

Most lightning damage to electronic equipment occurs when a facility employs the use of multiple earthing references that are not intentionally, and effectively, bonded together. Under lightning and electrical system fault conditions, "step," "touch," and "transferred earth" potentials can develop between multiple earthing connections that are not part of a common grounding electrode system. Proper bonding between electrode systems can reduce the voltage drops between them and establish an equipotential plane within the facility so as to enhance personnel safety. For example, lack of bonding between the electrical system electrode and the communications system electrode may result in damage to modems, telephone answering machines, etc., during lightning and system fault conditions.

Bonding measurements should be performed to determine if there are intentional bonding connections made between multiple earthing references. A three-terminal or four-terminal earth ground resistance tester can be configured to a two-terminal device, which allows measurements between each of the different grounding electrode systems. This includes supplemental electrodes established for the electrical service, alternate power sources, and lightning protection systems.

This test procedure can also be used to show potential equipment damage and personnel shock hazards where improper remote grounding electrodes are commonly driven to reference industrial controllers in order to comply with an equipment manufacturers' specifications. Where the electrode can be safely disconnected, a measurement can be made between the electrical system's ground and the electrode for the industrial controller to verify ohmic differences between them.

6.4.1.1.8 High-frequency grounding

Many electronic loads, such as data processing and process-control equipment located in controlled environments, employ a grounding system that has a low impedance at higher frequencies. These signal reference structures (SRSs) are connected in a prescribed manner that provides signal and power cabling, equipment frames, and other conductive items with an equipotential plane. The SRS should be bonded to the site's electrode grounding system.

Copyright © 1999 IEEE. All rights reserved.

Copyright by the Institute Of Electrical & Electronics Engineers Inc
Fri Jul 20 10:36:42 2001

6.4.1.1.9 Continuity of conduit/enclosure grounds

Electronic loads are recommended to be grounded with a separate equipment grounding conductor. The termination of the equipment grounding conductor can be either in an isolated ground system, insulated from the conduit ground, or it can be terminated in the conduit ground system. Either termination is ultimately connected to the building ground system. Both the isolated ground and the conduit ground should terminate at the first upstream neutral-ground bonding point. Ground impedance testers can be used to measure the quality of both the isolated ground and conduit ground systems from the equipment to the power source.

Routing of phase, neutral, and equipment grounding conductors through continuously grounded metallic conduit is recommended practice for electronic equipment performance in addition to meeting safety codes. Continuously grounded metal conduit acts as a shield for radiated interference.

6.4.1.2 Performance considerations

Recommended methods for the determination of performance-related parameters are discussed in 6.4.1.2.1 and 6.4.1.2.2.

6.4.1.2.1 Multiple earth ground references

Interconnected electronic devices that do not share a common ground reference between them (e.g., equipment in different buildings linked together via phone or data cable) are particularly susceptible to equipment damage during lightning strike conditions. This condition exists in facilities that have multiple buildings where the earthing system for each structure can be at a different potential. Furthermore, continuous noise currents can develop and travel along the shields. These noise currents can change the intended information by altering the "bit" structure of the transmitted signals.

Separate earthing systems can also exist within the same building. For example, the improper application of a remote-driven ground rod to establish an isolated ground system for electronic equipment can elevate remote electronic devices to a potential above or below other devices to which it may be interconnected.

If electronic equipment has a conducting connection to other devices within a structure, it is important that all interconnected devices be referenced at the same potential to minimize lightning damage. Otherwise, it may become necessary to provide some degree of optical isolation to create separation from the different grounding connections.

6.4.1.2.2 Separately derived systems

Separately derived systems have no direct electrical connection between the output supply conductors and the input supply conductors. Separately derived systems are required by the NEC to have a load-side neutral-ground bond that is connected to the grounding electrode system. All equipment grounding conductors, any isolated grounding conductors, neutral

Copyright © 1999 IEEE. All rights reserved.

Copyright by the Institute Of Electrical & Electronics Engineers Inc
Fri Jul 20 10:36:43 2001

conductors, and the metal enclosure of the separately derived system are required to be bonded together and bonded to the grounding electrode conductor. Visual inspections and measurements with a ground impedance tester can be used to determine the quality of these connections.

6.4.1.3 Wiring and grounding verification procedures

The services of qualified electrical maintenance personnel, when conducting verification and testing of the premises wiring system, should always be utilized. Their services will be needed to provide access to power panels and assist in conducting the tests with maximum safety. In addition, they may be able to provide valuable information (e.g., history and modifications) about the distribution system.

While conducting the testing program, close visual inspections of power panels, transformers, and all other accessible system components should be made. Loose connections, abnormal operating temperatures, and other such items that can provide clues to the quality of the distribution system are particularly important to note. A good point at which to start the distribution and ground testing is the main building service panel or supply transformer. If the quality of the earth ground system is questionable, an earth ground tester can be used to measure the resistance of this connection. Additional tests at this location should include measurement of rms voltage levels (phase-to-phase, phase-to-neutral, and phase-to-ground), current levels (phase, neutral, and ground), and verification of proper neutral-ground bonding.

From this point, each panel in the distribution system serving the equipment should be tested and verified. Tests should include voltages, currents, phase rotation, ground impedance, and neutral impedance. Verification should include proper isolation of the neutral conductor, proper conductor sizing, tightness of connections, and types of loads being served.

Upon completion of the panel testing and verification, all branch circuits supplying the sensitive equipment should be verified. These tests should include voltages, proper conductor termination (wiring errors), and the absence of neutral-ground and isolated ground shorts, as well as measurement of ground and neutral impedance levels.

The recommended practice is to develop a systematic method of recording all observations and test results. This will enable efficient data analysis as well as ensure that no tests are overlooked. Figure 6-1 illustrates a sample set of forms for recording test results.

Copyright © 1999 IEEE. All rights reserved.

Copyright by the Institute Of Electrical & Electronics Engineers Inc
Fri Jul 20 10:36:44 2001

Power Distribution Verification Test Data

System Type:

Site:

Date:

Location:

Contact:

Phone:

Source Transformer:

kVA: _____ Primary Voltage: _____ Secondary Voltage: _____

Taps: #1____; #2____; #3____; #4____; #5____; #6____; #7____; #8____

Tap Position: _____

Measured Voltages and Currents:

Primary Voltage		Primary Current
A-B _____		A _____
B-C _____		B _____
C-A _____		C _____
Phase Rotation: _____		G _____
Secondary Voltage		**Secondary Current**
A-B _____	A-N _____	A _____
B-C _____	B-N _____	B _____
C-A _____	C-N _____	C _____
Phase Rotation: _____		N _____
N-G Bonded? Yes _____	No _____	G _____

Remarks

Figure 6-1—Sample set of forms

Copyright © 1999 IEEE. All rights reserved.

Copyright by the Institute Of Electrical & Electronics Engineers Inc
Fri Jul 20 10:36:44 2001

Data Summary: Power Distribution and Grounding

Location: Date:

Panel: Room: User:

Power Source:

Panel Description:

Manufacturer: Model:

Total Poles: Amperes:

Main Disc: Y _____ N _____ Amperes:

Total Branch Circuits: 1 Pole _____ 2 Pole _____ 3 Pole _____

Feeder Description:

Phase Conductors: Size _____ Color _____ Copper: Y ___ N ___

Neutral Conductor: Size _____ Color _____ Copper: Y ___ N ___

Ground Conductor: Size _____ Color _____ Copper: Y ___ N ___

Neutral Bus:

Isolated Neutral Bus Installed?	Y	N
Total Number of Neutral Conductors?	_____	

Ground Bus:

Isolated Ground Bus Installed?	Y	N
Insulated Main Grounding Conductor?	Y	N
Conduit Main Grounding Conductor?	Y	N
Secondary Grounding Conductor?	Y	N
Total Number of Ground Conductors?	_____	

Panel Status:

Minimum NEC Working Clearance?	Y	N
Branch Circuits Correctly Labeled?	Y	N
Panel Name and Feeder Displayed?	Y	N
Panel Hardware Working Correctly?	Y	N
All Wiring Freely Accessible?	Y	N
Abandoned Wiring in Panel?	Y	N
All Connections Checked and Tight?	Y	N

Figure 6-1—Sample set of forms *(Continued)*

Copyright © 1999 IEEE. All rights reserved.

Copyright by the Institute Of Electrical & Electronics Engineers Inc
Fri Jul 20 10:36:45 2001

Data Summary: Power Distribution and Grounding		
Location:		Date:
Panel:	Room:	
Voltage Readings:	A to B	A to N
	B to C	B to N
	C to A	C to N
	N to G	N to IG
Current Readings:	Ph. A	Neutral
	Ph. B	Isol Gnd
	Ph. C	Ground
	Phase Rotation:	
Ground Impedance:		Neutral Impedance:
Remarks:		

Figure 6-1—Sample set of forms *(Continued)*

Copyright © 1999 IEEE. All rights reserved.

Copyright by the Institute Of Electrical & Electronics Engineers Inc
Fri Jul 20 10:36:46 2001

Data Summary: Power Distribution and Grounding

Location: Date:

Panel: Room:

Branch Circuit Loads

Po	CB Size	Load	Po	CB Size	Load
1			2		
3			4		
5			6		
7			8		
9			10		
11			12		
13			14		
15			16		
17			18		
19			20		
21			22		
23			24		
25			26		
27			28		
29			30		
31			32		
33			34		
35			36		
37			38		
39			40		
41			42		

Remarks:

Figure 6-1—Sample set of forms *(Continued)*

Copyright © 1999 IEEE. All rights reserved.

Copyright by the Institute Of Electrical & Electronics Engineers Inc
Fri Jul 20 10:36:47 2001

Data Summary: Power Distribution and Grounding

Location: Date:

Panel: Room:

Branch Circuit Tests

Circuit #	Voltage	Wiring	N/G Short	Ground Z	Neutral Z

Figure 6-1—Sample set of forms *(Continued)*

Copyright © 1999 IEEE. All rights reserved.

Copyright by the Institute Of Electrical & Electronics Engineers Inc
Fri Jul 20 10:36:48 2001

6.4.1.3.1 One-line diagram

A complete and up-to-date one-line diagram of the premises wiring and grounding system is extremely useful in helping to analyze the system. If a one-line diagram does not exist, one should be developed. This can allow the survey team to correctly identify the relevant power distribution for the problem area and can make the problem-solving process less tedious.

6.4.1.3.2 Visual media

Photographs and video-camera recordings can enhance a written report and show exposed problem areas as they appeared during the course of the survey. It can be especially useful where litigation between involved parties is concerned and it can also be used as a base product to reveal whether or not recommended changes have been implemented. Furthermore, it can become a valuable training tool to show "before" and "after" conditions of a power quality survey.

6.4.2 Quality of ac voltage and current

Upon completion of the power distribution and grounding verification portion of the site analysis, the next step is to determine the quality of the power being delivered to the equipment having problems. This would include analysis of the waveforms for voltage and current. Various studies (see Allen and Segall [B1], Allen and Segall [B2], Dorr [B5], Hughes [B7], Key [B9], Kleronomos [B10], Lim [B11], and Sabin et al. [B15]) have been conducted to quantify the types and frequency of occurrence of power line disturbances on circuits supplying electronic equipment. Generally, voltage disturbances as recorded by power line monitors can be classified into the basic groups shown in Chapter 3.

6.4.2.1 Detection of voltage disturbances

Subclauses 6.4.2.2 through 6.4.2.6 discuss the methods of detection for the various types of voltage disturbances included in Chapter 3. Recommendations for correction of these disturbances are covered in Chapter 8. A recommended practice is to periodically connect the power monitor to a disturbance generator and create known disturbances. Other recommended practices to aid in the installation of power line analyzers and interpretation of disturbance data are presented in IEEE Std 1159-1995.

6.4.2.2 Power monitor connections

Hookup of the monitor is an important consideration. Today's available technology allows the user to monitor both ac voltage and current waveforms. This would provide for a more complete analysis of the power distribution to correlate disturbances with equipment use. For example, if current levels increase substantially when voltage disturbances occur, the most probable cause for the voltage disturbance is the loads downstream from the monitoring point. If multiple channels are available, they should all be used to maximize the data obtained, enabling improved analysis of the number and the types of disturbances that have occurred. This analysis can then be applied toward the correct selection of power conditioning equipment to eliminate the problems. Figure 6-2, Figure 6-3, and Figure 6-4 illustrate suggested hookups for various power systems.

Copyright © 1999 IEEE. All rights reserved.

Copyright by the Institute Of Electrical & Electronics Engineers Inc
Fri Jul 20 10:36:48 2001

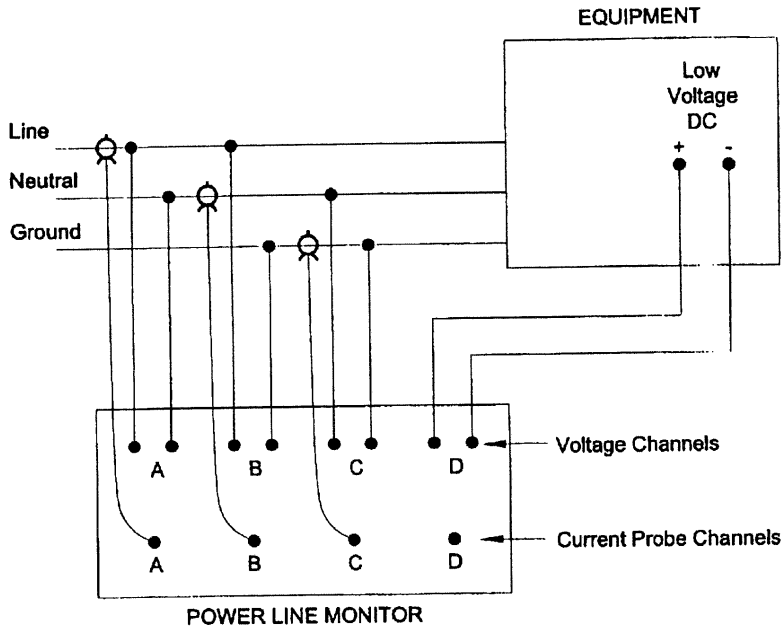

Figure 6-2—Recommended power monitor hookup procedure for single-phase applications

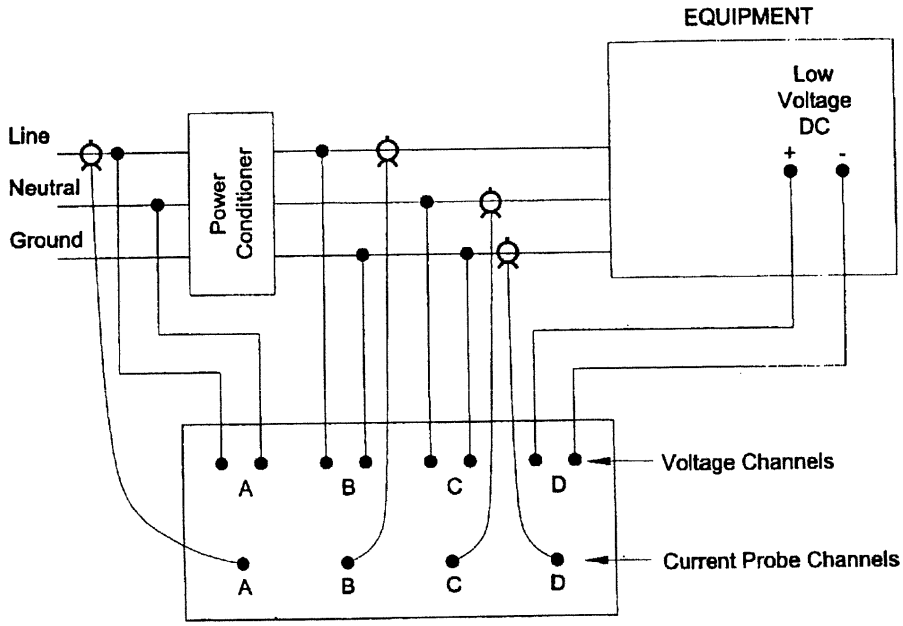

Figure 6-3—Recommended power monitor hookup procedure for single-phase applications with power conditioner

Copyright © 1999 IEEE. All rights reserved.

Copyright by the Institute Of Electrical & Electronics Engineers Inc
Fri Jul 20 10:36:49 2001

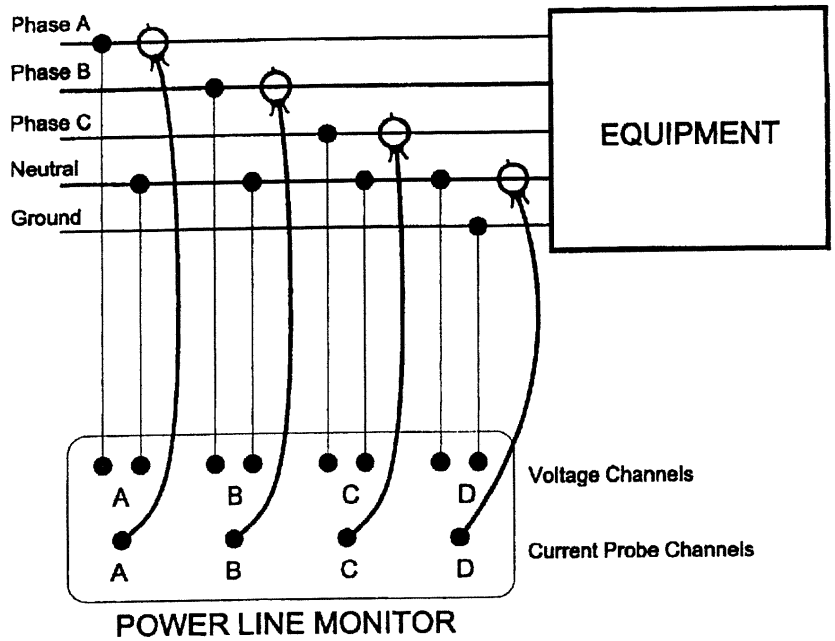

Figure 6-4—Recommended power monitor hookup procedure for three-phase wye applications

A technique that can be used to determine what, if any, effect disturbances have on equipment is to connect the dc channel of the monitor directly to the output of the equipment power supply. Events detected by the dc channel can then be correlated to events detected by the input ac channels in determining the level of the disturbance in the logic circuits.

WARNING
When connecting the monitor to a power panel, always use a qualified person to make the connections. The person shall insure that the connections are made safely and will remain secure for the duration of the monitoring period.

6.4.2.2.1 Monitor input power

Recommended practice is to provide input power to the monitor from a circuit other than the circuit to be monitored. Some manufacturers might include input filters or transient voltage surge suppressors on their power supplies that can alter disturbance data if the monitor is powered from the same circuit that is being monitored. If the separation of the power line monitor input power and the circuit being monitored cannot be maintained, then it may become necessary to supply the monitor with a properly sized, plug-in type isolation transformer in order to separate the two connections. In some cases, the power monitor can be powered from a dc power supply and thus eliminate the need for alternative methods by which to connect the monitor.

Copyright © 1999 IEEE. All rights reserved.

Copyright by the Institute Of Electrical & Electronics Engineers Inc
Fri Jul 20 10:36:50 2001

6.4.2.2.2 Monitor grounding

Care should be used in the grounding of the monitor. Since a monitor chassis ground may be provided through the ac input power cord, any monitor chassis ground connections to the circuit being monitored can create ground loops that result in additional noise being injected on the sensitive equipment feeder. To avoid this problem, it is recommended that no monitor chassis ground connection be made to the circuit being monitored. The instrument manufacturer should be contacted for guidance as required. Where a dc power supply is used to power the monitor, or a ground connection does not exist through the power cord, then a grounding connection should be made to the power monitor's chassis ground terminal.

6.4.2.2.3 Monitor placement

A power line monitor should be placed in a secured area that can allow the safe connection of the power monitor sense leads and the prevention of physical injury to nearby persons who may travel through the area. Locating the power monitor in an area that is safe and secure may reduce the possibility of physical damage to the monitor and ensure that connections cannot become loose, and that monitor settings are not disturbed.

Care should be given as to the environment the power monitor is expected to operate. As with many microprocessor-based devices, a power line monitor has limitations regarding temperature, humidity, dust, dirt, contaminants, and other environmental parameters. For example, low humidity levels within the area of the power line monitor increases its susceptibility to ESD. Mechanical shock and vibration should also be taken into account when setting up the monitor. Some monitors are not designed for outdoor use and should be in a protective covering.

Vibration of the monitor or the circuit being monitored can weaken connections and result in meaningless data generation. The power monitor should also be inspected prior to hook-up to the power distribution system to inspect for any damage that may have been incurred during transportation of the instrument. Any obvious physical damage to the outside packaging or frame of the monitor during transportation to the site should alert the user to possible internal damage to the instrument. It is recommended that the user verify proper equipment operation prior to use under these conditions.

Certain levels of RFI can also be introduced through the monitor sense leads or the power monitor itself and could cause erroneous data to be produced. Therefore, some shielding for the monitor under these circumstances may be necessary.

6.4.2.2.4 Quality of monitoring sense lead connections

The connection of the power monitor sense leads should be connected in a manner that does not violate the power monitor manufacturer's recommendations for monitoring voltage and current. Other recommended practices for monitor sense lead connections include the following:

a) Have a qualified person assist in the connection of the monitor to a switchboard, panelboard, transformer, and other electrical apparatus that have exposed electrical connections.

Copyright © 1999 IEEE. All rights reserved.

Copyright by the Institute Of Electrical & Electronics Engineers Inc
Fri Jul 20 10:36:51 2001

b) Review connections with the power monitors equipment manufacturer's manual and/or with an experienced person to verify safe and proper lead hook-up.

c) Reduce the use of jumper wires between channels and providing two wires per channel to minimize EMI/RFI coupling created from a disturbance on another channel. It may also become necessary to twist the sense leads for each channel and route along the grounded equipment enclosure chassis to reduce the EMI/RFI effects.

d) Make hard-wired power monitor connections to switchboards, panelboards, and transformers where the monitoring period may extend for an indefinite period of time. This could prevent monitor connections from being accidentally removed by unauthorized personnel.

Sense lead cables for power monitors can range in construction for a variety of applications (e.g., "alligator" clips and "button-hook" connectors). When concerned with equipment-operator safety, a fused clip lead is available from some monitor equipment manufacturers. Although these connections are properly constructed for safety, the weight of the sense lead cable can cause it to be separated from the fused clip, thus opening up the conductive path to the monitor channel input.

6.4.2.3 AC current monitoring

Simultaneous voltage and current measurements with power line monitors should be made where possible. This configuration would be useful to correlate equipment startup or operation with voltage disturbances. Clamp-on current transformers (CTs) must be verified as having a quality connection to the monitor. It should also be investigated that the split core ends of the CT are cleaned of any dirt or other contaminants that would otherwise compromise the validity of the current measurement.

To further decrease accuracy errors, it is recommended that the conductor or busbar that is being measured be positioned as close as possible to the center of the clamped area. It is also recommended that the user verify that no return conductors for the circuit being measured are contained within the same CT. This may result in a partial or total cancellation of the magnetic fields and can prevent the monitor from displaying accurate current measurements. Furthermore, the user should verify that the correct polarity exists for the CTs. Incorrect polarity could mislead the user as to the origin of the current impulse.

6.4.2.4 Setting monitor thresholds

It is important to understand how the monitoring instrument being utilized gathers its information. The variety of instruments that are commercially available differ in their data-capture techniques. For example, certain power monitors do not require any setting of the thresholds but instead plot the captured events on preprogrammed graphs. The differences in these techniques (such as how RMS voltage is determined, sample rate, method of capturing and recording transients, and method of calculating harmonic distortion) should be understood to ensure that the appropriate instrument is selected. This would help maintain that proper settings or thresholds are programmed so that meaningful data are obtained. The instrument manufacturers' instructions should be consulted to determine the appropriate method of programming the monitor for the application in which it is being used.

 Copyright © 1999 IEEE. All rights reserved.

Copyright by the Institute Of Electrical & Electronics Engineers Inc
Fri Jul 20 10:36:52 2001

In situations where little is known about the electrical environment in which the power monitoring is taking place, it may be helpful to use the "summary mode" of the instrument to characterize the environment over a 24-hour period prior to gathering detailed disturbance data.

Once the hookup of the monitor has been determined, the next step is the selection of thresholds at which disturbances will be recorded. The thresholds shown in Table 6-2 can be used as a guideline in setting up the power line monitor in most single-phase and three-phase configurations. The actual thresholds set by the user would depend on the threshold of the equipment experiencing problems as well as the parameters of the electrical system.

Table 6-2—General equipment tolerances to assist in data capture methods

Phase voltage thresholds	
Sag	–10% of nominal supply voltage
Swell	+5% of nominal supply voltage
Transient	Approximately 100 V over the nominal phase-neutral voltage
HF noise	Approximately 1% of the phase-neutral voltage
Harmonics	5% THD—the voltage distortion level at which loads may be affected
Frequency	±0.5 Hz
Phase unbalance	Voltage unbalance greater than 1%
Neutral-ground voltage thresholds	
Swell	1–2.5% of nominal phase-neutral supply voltage
Impulsive	50% of nominal phase-neutral voltage
Noise	Typical equipment susceptibility can vary—consult operating specifications for the affected equipment

In the varying levels of electrical environments that can be experienced through power quality investigations, some of the guidelines may not apply. It is important to review the performance specifications of the affected equipment before blindly setting up the monitor. If these specifications are available, then it would make the recommended threshold settings more specific to the equipment and its environment. For example, high and low thresholds should be set slightly within the voltage operating limits of the equipment. This should permit detection of voltage levels close to the critical maximum or minimum voltage limits that can result in equipment overstress or failures. If equipment tolerance limits are unknown, a high threshold of 126 V, and a low threshold of 108 V, is recommended for monitoring 120 V circuits.

Copyright © 1999 IEEE. All rights reserved.

Copyright by the Institute Of Electrical & Electronics Engineers Inc
Fri Jul 20 10:36:53 2001

Transient thresholds should be set to detect transients that cause component degradation or destruction. If no equipment transient limits are specified, a threshold of approximately 100 V_{peak} could be used. If the monitor has high-frequency noise detection, a threshold of 2–3 V_{peak} should be used for detection of high-frequency noise between neutral and ground.

Information such as the site, name, date, circuit being monitored, hookup scheme, and other related data, should be recorded at the beginning of the data printout to facilitate future reference to the data. Some monitors have the ability to be accessed via an RS-232 port or modem connection by a remote terminal or computer. This feature can be very helpful in the output of data, changing thresholds, and performing other functions on several monitors in the field from a single terminal in the office.

6.4.2.5 Monitor location and duration

When monitoring a site that is serving several loads, it may be advantageous to initially install the monitor at the power panel feeding the system to obtain an overall profile of the voltage. The monitor can then be relocated to the circuits serving individual loads, such as central processing units (CPUs), disk drives, or other such loads that are experiencing malfunctions and failures. Comparison of disturbance data can provide clues as to the source of the disturbances and how to most effectively remedy the problem. It is generally recommended that the minimum monitoring period include at least one full work cycle, which would normally be 7 or 8 days. Longer monitoring periods are often needed to record disturbances that occur on a random or seasonal basis.

6.4.2.6 Analysis of recorded voltage disturbances

Perhaps the most difficult task in conducting a site power survey is the analysis of the data provided by the power monitor. These data will be used in determining the source of the disturbances as well as making decisions on cost-effective methods for correction or elimination of the disturbances.

The individual responsible for the interpretation of data should have a thorough understanding of the disturbance capture and reporting characteristics of the specific monitor used in the site survey to minimize the possibility of misinterpretation. One of the factors to be determined is whether a particular disturbance is causing an equipment malfunction. This relationship is relatively easy to determine if an equipment malfunction occurred at the same time the disturbance was recorded.

In many cases, disturbances are recorded and appear to have no effect on equipment performance. These disturbances could still be severe enough to cause degradation of components that eventually result in premature failure. Part of the data analysis is a determination of the source of the disturbances, which can prove to be a very elusive task. Disturbances can be caused by the equipment itself, by other equipment within the facility, by equipment external to the facility, by power utility operations, by lightning, or any combination of these sources. Although a complete description is not possible in this recommended practice, some general guidelines can be helpful.

 Copyright © 1999 IEEE. All rights reserved.

Copyright by the Institute Of Electrical & Electronics Engineers Inc
Fri Jul 20 10:36:56 2001

If the equipment is supplied by an isolation transformer or a power conditioner, and disturbances are recorded on the output of the conditioner only, then the conditioner or the equipment itself may be the source.

Compare disturbances on the dc output of the power supply to events on the ac input to the equipment. If no time correlation can be made, the events on the dc channel could be originating at an external device and being reflected into the system by the data or communication cables. If disturbances are occurring about the same time during the working day, try to determine what equipment is being operated in the facility at those times. If no correlation can be obtained, then the source may be external to the facility.

Disturbances that occur at exactly the same time each day are caused by equipment that is time-clock controlled. One such type of equipment is a switched capacitor bank used by power utilities. Contacting the power utility company to determine what operations are being conducted on their system, which supplies power to the facility at various times of the day, can often provide helpful information.

6.4.3 Electronic equipment environment

Electronic equipment malfunctions and failures can be caused by improper environmental parameters such as temperature, humidity, EMI, and ESD. A site survey should include testing or monitoring of these parameters to confirm a proper environment for the equipment.

6.4.3.1 Temperature/humidity

Some monitors that are used to measure voltage disturbances have transducers available to measure temperature and humidity. Once the temperature and humidity specifications from the equipment manufacturer have been obtained, set the high- and low-threshold points slightly within those limits in order to capture variations that are close to the limits of the electronic equipment. Recommended practice is to program the monitors so that long-term (12 or 24 hour) reports of temperature and humidity levels are documented. Compare any sudden changes in temperature and humidity to the site error-logs to see if any correlation can be made. High levels of temperature can cause overheating and premature failure of components. High humidity can cause condensation resulting in intermittent contacts on circuit boards. Low humidity can be a contributing factor to causing increased levels of ESD.

6.4.3.2 EMI and RFI

Radiated EMI and RFI can impact the performance of electronic equipment. In attempting to confirm whether the problem is EMI, the first step is to establish the method of site operations. Are any transmitters or other communication devices being operated near the electronic equipment? Can correlation be made between the radio operation and equipment malfunctions? A visual inspection of the surrounding area can be conducted looking for external sources of EMI such as radio/TV towers, microwave towers, and airports.

Generally, two levels of EMI measurements can be conducted. The first is measurement of high-frequency fields using a field-strength meter or EMI transducer coupled to a power

Copyright © 1999 IEEE. All rights reserved.

Copyright by the Institute Of Electrical & Electronics Engineers Inc
Fri Jul 20 10:36:58 2001

monitor. This technique is recommended as a preliminary step to either confirm or eliminate EMI as a problem. Consult the electronic equipment manufacturer for the equipment susceptibility limits. If excessive levels of radiated fields are indicated, recommended practice is to conduct a complete EMI survey using a spectrum analyzer, which is the second level of EMI measurement. This survey is intended to pinpoint the frequency and direction of the signal source so that corrective measures can be taken.

Cable sheath currents at radio frequencies can be measured with a wideband CT similar to a clamp on meter coil. There are units available with bandwidths that are flat from 50 kHz to over 100 MHz. The transfer ratio is 1 to 1 when properly terminated. The output when connected to an oscilloscope or a spectrum analyzer can indicate levels in volts, which is the same as amperes with the 1 to 1 correspondence.

A current level of up to 7 mA (rms) at a radio frequency (normally in the broadcast band) should not give any trouble to electronic equipment. Levels up to 15 mA or higher probably will cause problems and might require EMI filters. Higher levels require filters and higher degrees of shielding depending on the shielding designed into the equipment. Recommended corrective measures for EMI problems include the following:

a) Reorienting or relocating the sensitive equipment or source;
b) Removal of the source;
c) Shielding of the source or affected equipment.

6.4.3.3 ESD

ESD can severely impact the performance and reliability of electronic equipment. A site can experience failures from ESD and not immediately be aware of the problem since voltage levels that can cause component failure are below the perception threshold of the individual. Meters are available to measure the level of static charge on personnel and equipment. Recommended practice is to measure static charge on personnel, furniture, and other such items located in the vicinity where the sensitive equipment is being operated. If equipment failures are caused by ESD, recommended corrective measures include the following:

a) Maintaining proper humidity levels in the equipment areas;
b) Using antistatic wriststraps and mats on floor and work surfaces;
c) Replacing static-generating items, such as chairs, and styrofoam and plastic cups, that aggravate the ESD problem;
d) Training operating personnel to discharge themselves before operating the sensitive equipment.

6.5 Harmonic current and voltage measurements

Currents generated by nonlinear loads should be investigated to determine what adverse affects it may have for the premises wiring system. Test procedures and acceptable limits for harmonic distortion should conform to IEEE Std 519-1992.

 Copyright © 1999 IEEE. All rights reserved.

Copyright by the Institute Of Electrical & Electronics Engineers Inc
Fri Jul 20 10:36:59 2001

6.5.1 Harmonics measurement instruments

Many instruments can be used to measure the extent of harmonic currents and steady-state ac voltage waveform distortion. These meters may present their results via graphic display or as statistical data on printed strip charts. Some examples of meters used to make harmonic measurements on the power system are oscilloscopes, true RMS voltmeters and clamp-on ammeters, spectrum analyzers, harmonic analyzers, and power line monitors.

It is recommended that the user follow the test equipment manufacturer's guidelines when connecting the meter to the premises wiring system to prevent a safety hazard and to assist in gathering meaningful data. The recommended instruments needed to perform these measurements are discussed in Chapter 5.

6.5.2 Harmonic measurement location

Harmonic measurements can be made at many locations throughout the premises wiring system. Harmonic voltage and current measurements can be made at the service entrance of the facility to reveal the overall harmonic content of the currents and voltages for the premises wiring system. Measurements can also be made at specific locations of the power system (i.e., secondaries of isolation transformers, feeder or branch circuit panels, equipment locations, etc.) to determine their contribution to the overall harmonic content of the facility.

6.5.3 Harmonic measurement techniques

The key to gathering meaningful harmonic data is understanding the issues that precede an investigation. Harmonic distortion of the voltage is a primary concern for disturbance-type problems and compliance with specifications where a device is experiencing control difficulties. Distortion of the current is the primary concern in transformer and premises wiring overheating problems, and can also be an issue for compliance to specifications. Some common examples are listed below.

— *IEEE Std 519-1992 compliance.* Measure the voltage and current at the "point of common coupling" (PCC), which is usually the service entrance.

— *Premises wiring overloads.* Measure the current distortion at the distribution panels, paying particular attention to the neutral current. Check the current distortion of interconnecting wiring in any modular furniture.

— *Transformer overheating.* Measure the transformer's secondary current distortion. This could provide a better indication of the harmonic distortion than the line currents in the primary.

— *Equipment compliance to specification requirements.* Measure voltage and current distortion as required by the specifications. For a variable-frequency speed drive it will normally be the input to the drive. The specifications for a uninterruptible power supply may require specific input and output distortion levels.

Copyright © 1999 IEEE. All rights reserved.

Copyright by the Institute Of Electrical & Electronics Engineers Inc
Fri Jul 20 10:37:00 2001

6.6 Applying data to select cost-effective solutions

Upon completion of the field testing and power monitoring portion of the site survey, it is recommended that all data be classified into distinct categories before analysis. This can assist in defining problem sources as well as identifying means of correction.

For example, a high-impedance neutral conductor on the incoming feeder to a power panel may be the cause of common-mode noise that is being reflected into the entire system. Since distribution and grounding problems are mechanical (loose), missing, or improper connections, the means of effective correction is also mechanical (a screwdriver). It is recommended that problems found in the power distribution and grounding system be corrected before attempting correction of problems in the quality of ac voltage. These distribution problems can normally be remedied at minimal cost, and in some cases may be the only correction needed to assure a high degree of system performance and reliability.

Careful analysis of the power monitoring data is necessary to determine the types, quantity, and severity of the disturbances recorded, as well as the immediate or long-term impact on equipment performance and reliability. It is this data that may form the basis for making decisions about what type of power conditioning equipment should be required to eliminate the problem. A discussion of the various types and applications of power conditioning equipment is provided in Chapter 7.

6.7 Long-term power monitoring

Studies have been conducted using power monitors to determine the quantities and types of disturbances that occur over an extended period of time (see Allen and Segall [B1], Allen and Segall [B2], Dorr [B5], Goldstein and Speranza [B6], Hughes [B7], Key [B9], Martzloff and Gruzs [B12], and Sabin et al. [B15]).

Although these studies can provide some helpful information, caution should be exercised in applying this information to correct problems at any given site. Numerous variables enter into the equation that determine the types and quantities of voltage problems occurring on any given site utilizing electronic loading equipment. They include the following:

a) Type and configuration of the electronic system installed (e.g., data processing, telecommunications, process measurement and control, and point-of-sale terminals);

b) Configuration and condition of the premises wiring and grounding system supplying the equipment;

c) Quantity, location, and type of power protection equipment installed;

d) Other equipment operating from the premises wiring system in the facility;

e) Location of the facility on the utility power system;

f) Other facilities in the immediate area served from the same power utility system;

g) Geographic location of the facility (exposure to lightning).

 Copyright © 1999 IEEE. All rights reserved.

Copyright by the Institute Of Electrical & Electronics Engineers Inc
Fri Jul 20 10:37:01 2001

6.8 Conclusions

Conducting a site power analysis or site survey can be an effective means of detecting and correcting power-related problems if it is properly applied. A systematic approach to investigating power quality problems is an essential prerequisite to providing cost-effective solutions. One possible procedure to resolve power quality problems is illustrated in Figure 6-5 (see Lim [B11]). Careful testing and troubleshooting techniques are necessary to collect meaningful power quality data. Classification and thorough analysis of all data must be conducted in order to define the problem areas.

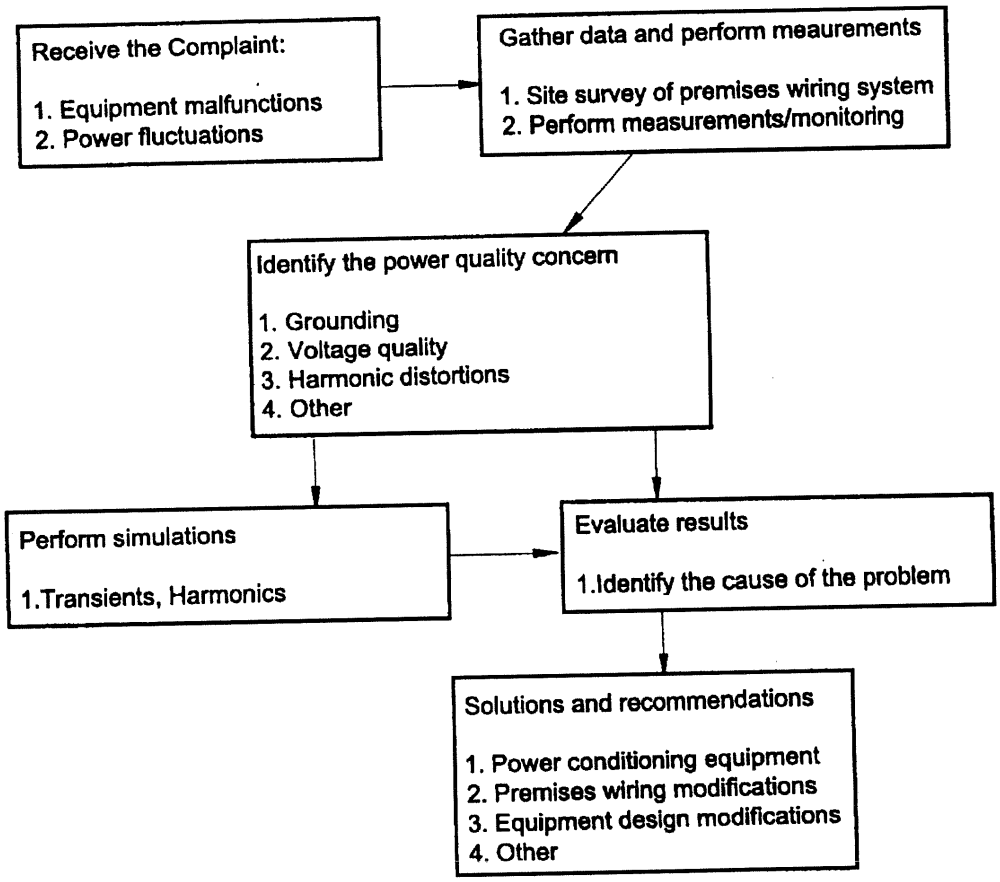

Figure 6-5—Systematic procedure for resolution of power quality complaints

Copyright © 1999 IEEE. All rights reserved.

Copyright by the Institute Of Electrical & Electronics Engineers Inc
Fri Jul 20 10:37:02 2001

6.9 References

This recommended practice shall be used in conjunction with the following publications. When the following standards are superseded by an approved revision, the revision shall apply.

IEEE Std 519-1992, IEEE Recommended Practices and Requirements for Harmonic Control in Electrical Power Systems.[3]

IEEE Std 1159-1995, IEEE Recommended Practice on Monitoring Electric Power Quality.

NFPA 70-1999, National Electrical Code® (NEC®).[4]

6.10 Bibliography

Additional information may be found in the following sources:

[B1] Allen, G. W., and Segall, D., "Impact of Utility Distribution Systems on Power Line Disturbances," *IEEE Summer Power Meeting Conference Paper,* SUMPWR-76, A76-338-4, 1976 (abstract in *IEEE Transactions on PAS*, vol. PAS-95, pp. 1760–1761, Nov./Dec. 1976).

[B2] Allen, G. W., and Segall, D., "Monitoring of Computer Installations for Power Line Disturbances," *IEEE Winter Power Meeting Conference Paper,* WINPWR C74 199-6, 1974 (abstract in *IEEE Transactions on PAS,* Vol. PAS-93, p. 1023, July/Aug. 1974).

[B3] CFR 29 Part 1910, Occupational Safety and Health Standards (OSHA).[5]

[B4] CFR 29 Part 1926, Safety and Health Regulations for Construction (OSHA).

[B5] Dorr, D., "Point of Utilization Power Quality Study Results," *IEEE Transactions on Industry Applications,* vol. 31, no. 4, July/Aug. 1995.

[B6] Goldstein, M., and Speranza, P. D., "The Quality of U. S. Commercial ac Power," *IEEE International Telecommunications Energy Conference* (INTELEC), pp. 28–33 [CH1818-4], 1982.

[B7] Hughes, M.B., "Canadian National Power Quality Survey," *Proceedings of EPRI PQA '95,* New York, New York, May 9–11, 1995.

[3]IEEE publications are available from the Institute of Electrical and Electronics Engineers, 445 Hoes Lane, P.O. Box 1331, Piscataway, NJ 08855-1331, USA (http://www.standards.ieee.org/).

[4]The NEC is published by the National Fire Protection Association, Batterymarch Park, Quincy, MA 02269, USA (http://www.nfpa.org/). Copies are also available from the Institute of Electrical and Electronics Engineers, 445 Hoes Lane, P.O. Box 1331, Piscataway, NJ 08855-1331, USA (http://www.standards.ieee.org/).

[5]CFR publications are available from the Superintendent of Documents, U.S. Government Printing Office, P.O. Box 37082, Washington, DC 20013-7082, USA.

 Copyright © 1999 IEEE. All rights reserved.

Copyright by the Institute Of Electrical & Electronics Engineers Inc
Fri Jul 20 10:37:03 2001

[B8] IEEE Std 81-1983, IEEE Guide for Measuring Earth Resistivity, Ground Impedance, and Earth Surface Potentials of a Ground System.

[B9] Key, T. S., "Diagnosing Power Quality Related Computer Problems," *IEEE Transactions on Industry Applications,* vol. IA-15, no. 4, July/Aug. 1979.

[B10] Kleronomos, Chris C., and Cantwell, Edward C., "A Practical Approach to Establish Effective Grounding for Personnel Protection," *IEEE Industrial and Commercial Power Systems Technical Conference* (I &CPS), pp. 49–57 [CH1460-5], 1979.

[B11] Lim, Philip K., "Systematic Approach to Resolve Power Quality Complaints," Memphis State University, Dec. 1993.

[B12] Martzloff, F. D., and Gruzs, T. M., "Power Quality Surveys: Facts, Fictions, and Fallacies," *IEEE Transactions on Industry Applications,* vol. 24, no. 6, pp. 1005–1018, Nov./Dec. 1988.

[B13] Michaels, Kenneth M., "Earth Ground Resistance Testing for Low Voltage Power Systems," *IEEE Transactions on Industry Applications,* vol. 31, no.1, pp. 206–213, Jan./Feb. 1995.

[B14] NFPA 70E-1995, Electric Safety Requirements for Employee Workplaces.[6]

[B15] Sabin, D. D., Grebe, T. E., and Sundaram, A., "Surveying Power Quality Levels on U.S. Distriubution Systems," *Proceedings 13th International Conference on Electricity Distribution (CIRED '95),* Brussels, Belgium, May 1995.

[6]NFPA publications are available from Publications Sales, National Fire Protection Association, 1 Batterymarch Park, P.O. Box 9101, Quincy, MA 02269-9101, USA (http://www.nfpa.org/).

Copyright © 1999 IEEE. All rights reserved.

Copyright by the Institute Of Electrical & Electronics Engineers Inc
Fri Jul 20 10:37:04 2001

Chapter 7
Specification and selection of equipment and materials

7.1 General discussion

This chapter describes the many types of power correction devices that accept electrical power in whatever form it is available, and modify the power to improve the quality or reliability required for sensitive electronic ac equipment. These devices perform functions such as the elimination of noise, change, or stabilization of voltage, frequency, and waveform.

The power handling and performance requirements vary depending upon each application. A wide variety of power correction products are available that utilize a range of technologies and provide different degrees of protection to the connected load. The requirements of the application need to be understood, and then a cost-effective solution applied using one or more of the available products.

The job of selecting the appropriate power correction device is fairly straightforward when it powers a single load. The requirements of only one load need to be considered. For larger systems that support many loads, the requirements of all loads need to be considered, as well as the potential interactions between them, to decide the appropriate enhancement equipment and system construction.

Prior to addressing the selection of power-enhancement equipment, the following should be considered:

a) Is power quality really a problem? Poor power quality is only one of many reasons for operational problems with critical loads. Examples of other problems that could interfere with proper operation of a critical load include software and hardware troubles within the system, temperature and humidity beyond the limits of the critical load, electrostatic discharge, improper wiring and grounding, and operator errors. The power quality requirements of the load need to be known. Refer to Chapter 3 for several guidelines.

b) What type of power disturbances are occurring? To determine what type of conditioning is required, refer to Chapter 6 for guidelines on site power analysis. In addition to the present power quality profile, some anticipation of the future needs of quality and reliability of the power supply should be considered.

c) What level of expenditure is justified to eliminate or mitigate the power-related problems? Some estimate should be made of the costs associated with power disturbances. This includes the value of the loss of profits, hardware damage, lost data, lost productivity, and processing errors.

Copyright © 1999 IEEE. All rights reserved.

Previous page is blank

Copyright by the Institute Of Electrical & Electronics Engineers Inc
Fri Jul 20 10:37:05 2001

7.2 Commonly used power correction devices

Table 7-1 gives a summary description of the most commonly used power correction devices, and Figure 7-1 shows a summary of performance features of the various types of power conditioning equipment.

POWER QUALITY CONDITION		POWER CONDITIONING TECHNOLOGY								
		TRANSIENT VOLTAGE SURGE SUPPRESSOR	EMI/RFI FILTER	ISOLATION TRANSFORMER	VOLTAGE REGULATOR (ELECTRONIC)	VOLTAGE REGULATOR (FERRORESONANT)	MOTOR GENERATOR	STANDBY POWER SYSTEM	UNINTERRUPTIBLE POWER SUPPLY	STANDBY ENGINE GENERATOR
TRANSIENT VOLTAGE SURGE	COMMON MODE	▒		■	▒	■	■	▒	▒	
	NORMAL MODE	▒			▒	■	■	▒	■	
NOISE	COMMON MODE		▒	■	▒	■	■	▒	▒	
	NORMAL MODE		▒	▒	▒	■	■	▒	■	
NOTCHES				▒		■	■		■	
VOLTAGE DISTORTION						▒	■		▒	
SAG					▒	▒	▒	▒	■	
SWELL					▒	■	■	▒	■	
UNDERVOLTAGE					■	■	■	▒	▒	
OVERVOLTAGE					■	■	■	▒	▒	
MOMENTARY INTERRUPTION							▒	■	■	
LONG-TERM INTERRUPTION										■
FREQUENCY VARIATION								▒	■	▒

■ IT IS REASONABLE TO EXPECT THAT THE INDICATED CONDITION WILL BE CORRECTED BY THE INDICATED POWER CONDITIONING TECHNOLOGY.

▒ THERE IS A SIGNIFICANT VARIATION IN POWER CONDITIONING PRODUCT PERFORMANCE. THE INDICATED CONDITION MAY OR MAY NOT BE FULLY CORRECTABLE BY THE INDICATED TECHNOLOGY.

Figure 7-1—Summary of performance features for various types of power conditioning equipment

Copyright © 1999 IEEE. All rights reserved.

Copyright by the Institute Of Electrical & Electronics Engineers Inc
Fri Jul 20 10:37:06 2001

Table 7-1—Summary of power-enhancement devices

Device and principal functions	General description
Isolation transformers Attenuates common-mode disturbances on the power supply conductors. Provides a local ground reference point. With taps, allows compensation of steady-state voltage drop in feeders.	Transformer with physically different winding for primary and secondary. Often has single or multiple electrostatic shields to further reduce common-mode noise.
Noise filters Common or transverse-mode noise reduction with attenuation and bandwidth varying with filter design.	Series inductors with parallel capacitors. Good for low-energy, high-frequency noise.
Harmonic filters Reduction in input current harmonics of nonlinear loads, which can cause heating of power conductors, transformers, motors, etc.	Series inductors with harmonic trap to prevent harmonics from being fed back to line.
Surge suppressors Divert or clamp surges.	Various types of surge suppressors are available to limit circuit voltages. Devices vary by clamping, voltage, and energy-handling ability. Typical devices are "crowbar" types like air gaps and gas discharge tubes; and nonlinear resistive types like thyrite valves, avalanche diodes, and metal oxide varistors. Also available are active suppressors that are able to clamp, or limit, surges regardless of where on the power sinewave the surges occur. These devices do not significantly affect energy consumption.
Voltage regulators Provide a relatively constant steady-state output voltage level for a range of input voltages.	A variety of voltage regulation techniques are utilized. Common techniques include ferroresonant transformers, electronic tap switching transformers, and saturable reactor regulators.
Power line conditioners Most often a product providing both regulation and noise reduction. Some products provide multiple noise-reduction methods, e.g., transformer and filter, but usually no voltage regulation.	Shielded ferroresonant transformers (including voltage regulation) or shielded transformers with tap changers (including surge suppressors and filters).
Magnetic synthesizer Voltage regulation, common- and transverse-mode noise and surge attenuation and correction of voltage distortion.	Three-phase, ferroresonant-based device that generates an output voltage by combining pulses of multiple saturating transformers to form a stepped waveform.

Copyright © 1999 IEEE. All rights reserved.

Copyright by the Institute Of Electrical & Electronics Engineers Inc
Fri Jul 20 10:37:07 2001

Table 7-1—Summary of power-enhancement devices (*Continued*)

Device and principal functions	General description
Motor generators Voltage regulation, noise/surge elimination, and waveform correction for voltage distortion.	Most often two separate devices, a motor and an alternator (generator), interconnected by a shaft or other mechanical means.
Standby power systems (battery-inverter type) Inverter and battery backup, operating as an uninterruptible power supply (UPS), when normal power fails. In standby mode, the load is fed directly from the utility.	An inverter to which the load is switched after utility failure. There is some break in power when the transfer to and from utility power occurs. Usually comprised of a solid-state inverter, battery, and small battery charger.
Uninterruptible power supplies Maintain supply of regulated voltage, wave-shaping, and noise/surge violation for a period of time after power failure.	Line interactive or rectifier/inverter technologies are most common. A battery supplies the power to the inverter during loss of input power.

7.2.1 Isolation transformers

Isolation transformers are one of the most widely used power correction devices. Figure 7-2 depicts the configuration of an isolation transformer. They incorporate separate primary (or

Copyright by the Institute Of Electrical & Electronics Engineers Inc
Fri Jul 20 10:37:08 2001

For power conditioning purposes, isolation transformers should be equipped with electrostatic (Faraday) shields between the primary and secondary windings as shown in Figure 7-3. An electrostatic shield is a conducting sheet of nonmagnetic material (copper or aluminum) connected to ground that reduces the effect of interwinding capacitive coupling between primary and secondary windings, and improves the isolation transformer's ability to isolate its load from the common-mode noise present on the input power source. Simple shielding adds little to the cost, size, or weight of the transformer.

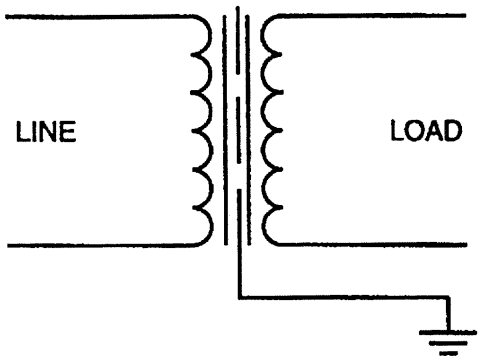

Figure 7-3—Shielded isolation transformer

Specialty conditioning transformers, referred to as "super isolation" or "ultra isolation" transformers, are equipped with additional shields around each winding to further reduce the capacitive coupling. This type of transformer is claimed to reduce the common-mode noise of certain frequencies by as much as 140 dB or more. However, this is done at the expense of introducing additional transformer reactance with resultant degraded voltage regulation with load change and higher costs than that of the isolation transformers with single electrostatic shields. These transformers generally do not provide decoupling of the transverse-mode disturbances.

Isolation transformers do not provide any line voltage regulation and, in fact, may cause some additional degradation of voltage regulation due to their series impedance. As was stated above, shielding tends to adversely affect regulation. Isolation transformers tend to be quite efficient (95–98%) so they generate little heat and are relatively quiet. They can be obtained in enclosures that are suitable for installation in computer rooms.

Isolation transformers can be installed separately or with power distribution circuit breakers. Isolation transformers with distribution circuit breakers have the advantage of being able to be located very close to the critical load. This configuration provides for short power cables that limit the amount of noise that can be coupled into them. Added advantages of these units are additional noise and some surge suppression, integral distribution, monitoring, and flexible output cables that provide for simpler rearrangement of the data center.

Copyright © 1999 IEEE. All rights reserved.

Copyright by the Institute Of Electrical & Electronics Engineers Inc
Fri Jul 20 10:37:08 2001

7.2.2 Noise filters

Line filters have the function of reducing conducted electromagnetic interference, and radio-frequency interference (RFI). Figure 7-4 shows a representation of one type of inductor/capacitor (LC) filter. Filters can be used to prevent interference from traveling into equipment from the power source as well as prevent equipment that generates interference from feeding it back into the power line. Most types of sensitive electronic equipment have some form of filters to limit the high-frequency noise, usually needed to comply with Federal Communications Commission (FCC) equipment emission limits.

Copyright by the Institute Of Electrical & Electronics Engineers Inc
Fri Jul 20 10:37:09 2001

Copyright by the Institute Of Electrical & Electronics Engineers Inc
Fri Jul 20 10:37:10 2001

large surges. The protective device may fail without any indication that the unit is unable to function.

7.2.5 Voltage regulators

Most low-frequency disturbances, except large sags or outages, can be handled by appropriate application of a voltage regulator. There are a number of types of voltage regulators in use today. Ferroresonant and solid-state tap-changing transformers, are used almost exclusively today, rather than slower-acting electromechanical types.

Early electromechanical regulators typically had a motor operator that moved a sliding tap on a transformer. These induction regulators are fast enough to follow voltage changes that occur during the day or seasonally due to application and removal of steady load. These units are not suitable to protect sensitive electronic load against rapid changes in voltage.

7.2.5.1 Tap changers

Fast response regulators divide into two generic classes: tap changers and buck boost. The first is the tap-changing regulator shown in Figure 7-6. Quality tap changers are designed to adjust for varying input voltages by automatically transferring taps on a power transformer (either isolating type or auto-transformer type) at the zero current point of the output wave. Some models make the tap change at the voltage zero crossing, which causes a transient to be generated except when the load is at unity power factor. With voltage-switching-type units, the magnitude of the transient should be determined on the actual load conditions. The number of taps determines the magnitude of the steps and the range of regulation possible. An acceptable regulator may have at least 2 taps below normal and 2 taps above normal for 5 total steps. The taps are usually around 4–10% steps, depending on specific designs. Response time is usually less than 2 cycles and is limited to that speed because of the zero current switching criteria.

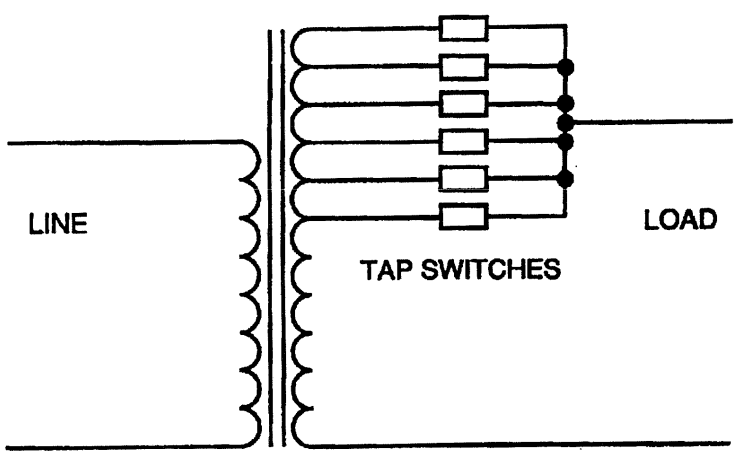

Figure 7-6—Tap changing regulator

Copyright © 1999 IEEE. All rights reserved.

Copyright by the Institute Of Electrical & Electronics Engineers Inc
Fri Jul 20 10:37:11 2001

A major advantage of the tap changer is that its only impedance is the transformer or autotransformer and the semiconductor switches. It introduces little harmonic distortion under steady-state operation and minimizes load-induced disturbances as compared to regulators with higher series impedance. It also has high short-term overload capability to provide for starting inrush. In its usual configuration with an isolating transformer and wide undervoltage capability, it provides both common-mode isolation and regulation.

7.2.5.2 Buck boost

The second class of fast response regulators is the electronic buck-boost type (Figure 7-7). It utilizes thyristor control of buck and boost transformers in combination with parametric filters to provide regulated sinusoidal output, even with nonlinear loads typical of computer systems. This is done in a smooth continuous manner eliminating the steps inherent in the tap changer. Inrush currents can be delivered for start-up typical of computer central processors or disc drive motors while maintaining nearly full voltage. Units can be equipped with an input isolating transformer with electrostatic shield providing voltage stepdown and common-mode attenuation when needed. Power is fed to the regulator, which either adds to (boosts) or subtracts from (bucks) the incoming voltage so that the output is maintained constant for15–20% variations of input voltage. This is done by comparing the output voltage to the desired (set) level and by the use of feedback to modify the level of boost or buck so that the desired level is maintained. A parametric filter provides a path for nonlinear currents generated by the load and by the regulator itself and produces a sine wave output with low total harmonic distortion.

Copyright by the Institute Of Electrical & Electronics Engineers Inc
Fri Jul 20 10:37:12 2001

inductance and a capacitor. The regulator maintains a nearly constant voltage on the output for input voltage swings of 20–40%. These units are reliable because they contain no moving or active electronic parts. If these units are built with isolation (and shielding), they can provide for common-mode noise reduction and provide a separately derived source for local power grounding. They also attenuate normal-mode noise and surges.

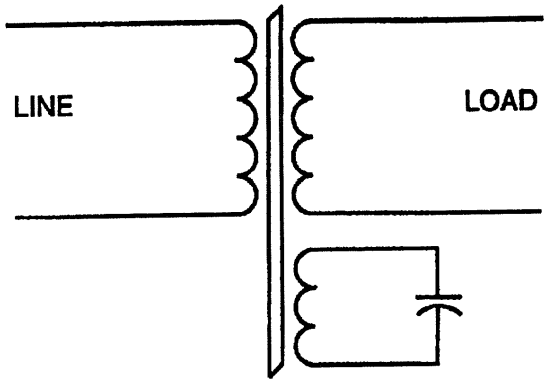

Figure 7-8—Ferroresonant regulator

Careful analysis is required for overload conditions. The load current tends to cause the unit to go out of resonance if it gets too high. Often these units can only supply 125–200% of their full load rating. If inrush or starting currents exceed these limits, the output voltage will be significantly reduced, which may not be compatible with many loads. The other devices on the output of the CVT will see this sag in the voltage and may shut down due to an undervoltage. These devices should be oversized if they are expected to provide for heavy starting or inrush currents.

Some of the units are noisier than regular transformers and may require special enclosures before they can be installed in office environments. For more information on ferroresonant or constant voltage transformers, see IEEE Std 449-1998 [B3].[1]

7.2.6 Power line conditioners

Typical power line conditioners combine one or more of the basic power correction technologies to provide more complete protection from power disturbances. Some line conditioners combine the noise-reduction features of isolation transformers or filtering devices with voltage regulators. These units provide a locally derived source with isolation while providing voltage regulation. The advanced conditioners also incorporate surge suppressors to clamp high-voltage surges, which filtering alone does not address.

7.2.6.1 Magnetic synthesizer

Another ferroresonant-based technology is the magnetic synthesizer (Figure 7-9). These units consist of nonlinear inductors and capacitors in a parallel resonant circuit with six saturating

[1]The numbers in brackets correspond to those of the bibliography in 7.8.

Copyright © 1999 IEEE. All rights reserved.

Copyright by the Institute Of Electrical & Electronics Engineers Inc
Fri Jul 20 10:37:13 2001

pulse transformers. These units draw power from the source and generate their output voltage waveform by combining the pulses of the saturating transformers in a stepped-wave manner. They provide for noise and surge rejection and regulation of the output voltage to within 10% over large swings in input, up to ±50%. These units generally incorporate shielding into the pulse transformers to attenuate common-mode disturbances. Additional filtering is included to eliminate self-induced harmonics. This filtering can handle a reasonable level of harmonic distortion at the input or at the output as induced by the nonlinear loads. The circuit is tuned to the rated output voltage and frequency.

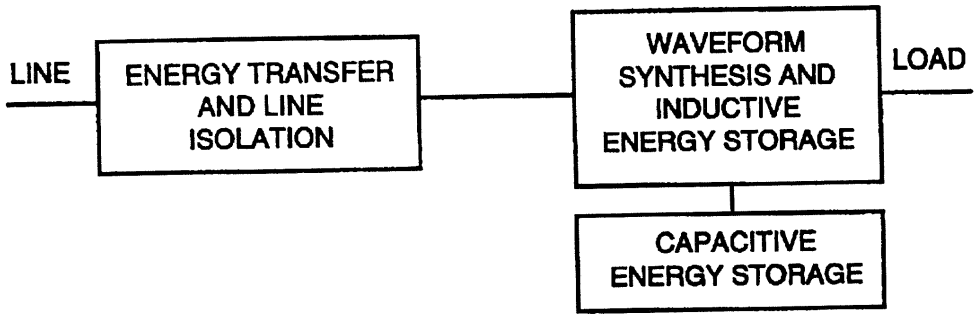

Figure 7-9—Magnetic synthesizer

The regulator has an inherent current-limiting characteristic that limits maximum current at full voltage to the range of 150–200% of rating. Beyond that load, the voltage drops off rapidly producing typically 200–300% current at short circuit. This is a limitation with large inrush and starting currents. Sudden large load changes, even within the units rating, can cause significant voltage and frequency transients in the output of this type of line conditioner. These units are best applied when the load does not make large step changes.

The tuned circuit has stored energy and may, therefore, ride through outages of one-half cycle or slightly more provided the outage is not a fault close to the input, which would drain the stored energy. Magnetic synthesizers tend to be large and heavy due to the magnetics involved and can be acoustically noisy without special packaging. Some of the larger units display good efficiencies as long as they are operated at close to full load. Depending upon the design, the synthesizer may introduce some current distortion on its input, due to its nonlinear elements.

7.2.6.2 Motor generators

Motor-ac generator sets (M-Gs) provide the function of a line conditioner and can also provide for conversion of the input frequency to a different frequency that is required by the load. Figure 7-10 depicts one configuration of an M-G. Examples of this are 60-to-50 Hz or 60-to-415 Hz frequency converters. These units consist of a utility-powered electric motor driving an ac generator that supplies voltage to the load. The motor and generator are coupled by a shaft or belts. This totally mechanical coupling of the input and the output allows the M-G to provide total noise isolation of the load from the input power source. Practical M-G systems include a bypass circuit that can reduce this total input-to-output isolation.

Copyright © 1999 IEEE. All rights reserved.

Copyright by the Institute Of Electrical & Electronics Engineers Inc
Fri Jul 20 10:37:14 2001

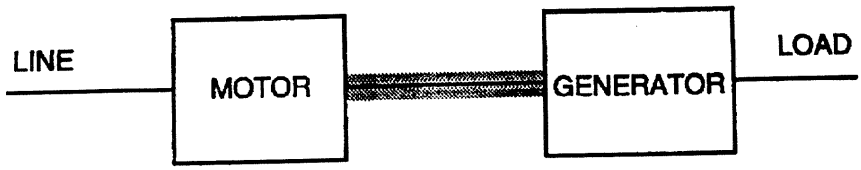

Figure 7-10—Motor-generator set

The induction motor is the least expensive of the common types of motors used on these devices. This type of motor does not rotate at the same speed as the rotating field that is generated by the input power. The speed at which the motor turns changes with load and input voltage variations. Since the generator frequency is a function of its shaft speed, the output frequency varies with the motor speed. The output voltage is maintained by controlling the excitation to the field winding of the generator and is independent of small changes of motor speed.

For a 60 Hz output, however, the frequency tolerance of the load can be much more critical. Computers generally require ±0.5 Hz. This can be achieved by the use of low-slip designs in the induction motor. In the most critical applications, a synchronous motor drive is required so that output frequency is the same as the utility input. Totally synchronous M-Gs also maintain their outputs nearly in phase with the utility source. This allows for uninterrupted transfers

Copyright by the Institute Of Electrical & Electronics Engineers Inc
Fri Jul 20 10:37:15 2001

that they do not provide the same level of noise and surge isolation between the input and the output as conventional M-Gs. The noise has a path through the unit because of the coupling between the two stators that are typically wound one on top of the other.

M-Gs tend to be more expensive than other types of line conditioning equipment. They are usually physically large and heavy. Depending on the design, the M-G efficiency can be relatively low so that electrical energy costs over its lifetime may be significant. The rotary transformer types, as well as some of the larger standard units, display better performance in this area. M-Gs tend to be noisy and require soundproof enclosures to make them suitable for computer room installation. M-Gs do not introduce measurable current distortion on their input source and have the added advantage of lowering the overall level of distortion by isolating the utility from the harmonic current requirements of the loads supplied by the generator.

7.2.7 Computer power distribution units (PDU)

A PDU is a device that provides a convenient method for distributing electrical power to many devices without the need for hard wiring, and can be a separately derived source for local grounding. It is essentially a cabinet with a flexible input cable, isolation transformer, distribution circuit breakers, and flexible load cables. The load cables are terminated with mating connectors for direct connection to the load equipment. Some manufacturers include power conditioners such as tap-changers, M-Gs, and synthesizers internal to the power center to further enhance performance.

The PDU greatly reduces the time required to install the average computer system and allows for relatively easy relocation of equipment as compared to hard wiring methods. This can translate into significant cost and time savings. The isolation provided by the transformer (or M-G) in the power center allows the creation of a local ground as described in FIPS Pub 94-1983 [B1].

Units with internal power conditioners can be used to reduce the effects of long distribution lines from central power conditioning and UPS equipment. The effect of current harmonics introduced on the power source is a function of the type of conditioner used in the power center.

7.2.8 Standby power systems (battery-inverter type)

Standby power systems are those power systems in which the load is normally supplied by the utility input. Figure 7-11 shows one configuration of the standby system. The standby system only supplies the load when a satisfactory utility source is not available (see IEEE Std 446-1995 [B2]). These power systems are intended for loads that can tolerate discontinuity of power during the transfer. They come in a number of configurations using a number of technologies, and are used for a variety of loads ranging from personal computers to emergency lighting.

Copyright © 1999 IEEE. All rights reserved.

Copyright by the Institute Of Electrical & Electronics Engineers Inc
Fri Jul 20 10:37:16 2001

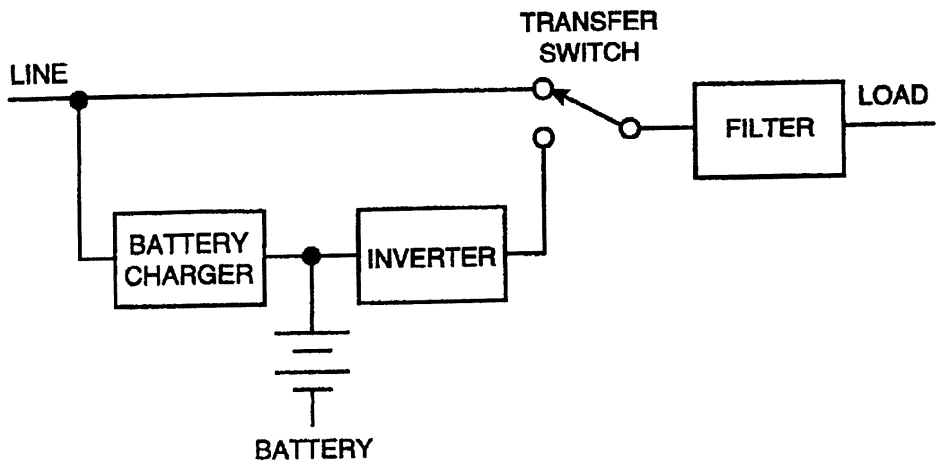

Figure 7-11—Standby power system

The simplest form of standby system has the load connected to the utility source through a transfer switch during normal operation. In the event of a utility failure, the load is transferred to an inverter that generates ac power of satisfactory quality to support the load. The inverter is fed from a battery that has been maintained at full charge from a rectifier unit that is fed from the utility source. The design of this type of supply allows several economies. First, the inverter is not supporting the load on a continuous basis. It only has to operate for the duration of the power outage or for the life of the batteries. This period is typically 15 min or less. Second, the rectifier section only has to be able to recharge the battery and not support the full load of the inverter.

Normal operating efficiency of this type of unit is high since the load is being fed from the utility under normal operation. The losses are those associated with the line conditioning element (if used), rectifier, and the inverter, if in fact it is operating while off line. A major requirement of this type of unit is its ability to sense all types of power failures and transfer to the inverter without an unacceptably long input-power loss to the load equipment. These units are typically successful in powering systems that have power supplies that can tolerate short durations of input-power interruption. They are often employed with loads that utilize switch-mode power supplies, which often do not require regulated input voltage and are tolerant of momentary loss of power during the transfer. In addition, fast electronic (static) transfer switch can be used to greatly reduce the transition time.

A common enhancement involves the use of a line conditioner in series with the load to provide conditioning of the utility voltage during normal operation. The conditioner can be one of the types that were previously discussed. Some manufacturers take advantage of the extensive filtering capability of some of the conditioners, such as the ferroresonant transformer, magnetic synthesizer, and M-G. The filtering capability allows them to use a very simple inverter circuit that generates square waves as opposed to sine waves. The line conditioner is in circuit all the time and provides conditioning of the inverter output as well as

Copyright © 1999 IEEE. All rights reserved.

Copyright by the Institute Of Electrical & Electronics Engineers Inc
Fri Jul 20 10:37:17 2001

the utility during normal operation. Continuous regulated output power can be achieved by this method if the line conditioner has sufficient ride-through to power the load during the interruption time (see 7.2.9.1).

Another variation of this topology is one that has a tap changer that powers the load and an inverter that, under normal operation, is used as a rectifier to maintain the charge of the battery. When the input power source fails, the inverter shifts phase quickly to start taking power from the battery and supplying the load through the tap-changing transformer.

7.2.9 Uninterruptible power supplies (UPSs)

UPSs are intended to provide regulated output power regardless of the condition of the input power source, including total power outages. UPSs come in a variety of configurations and utilize various technologies. The major categories of UPS are rotary and static UPS.

7.2.9.1 Rotary UPS

A rotary, or M-G UPS, consists of a rotary line conditioner modified to receive power from a battery when utility power is not available. Three major methods are used to provide this uninterruptible performance.

One method involves the addition of a dc motor to the system (Figure 7-12). The dc motor takes over for the ac motor when the utility power is no longer sufficient to support the load. These motors can be on the same shaft as the rest of the M-G or can be connected by drive belts. The battery can be recharged by a solid-state battery charger or can be recharged directly from the dc motor. This is accomplished by controlling the field current to change the function of the dc motor to that of a generator. This approach reduces the complexity of the system but the dc motor usually experiences rapid brush wear when operated in this idle state.

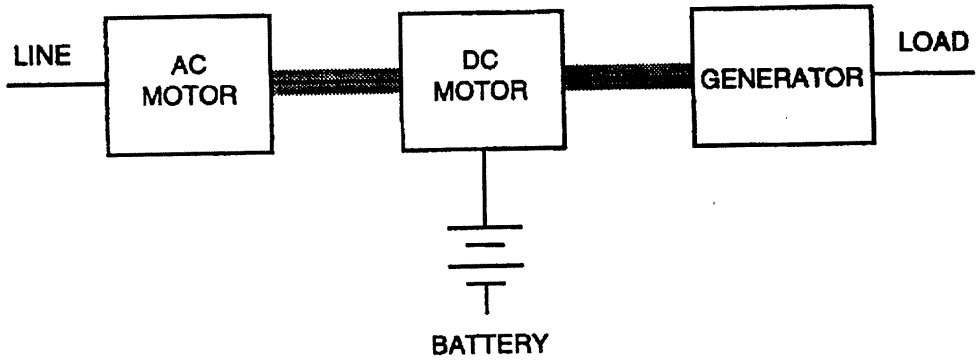

Figure 7-12—Rotary UPS with dc motor/generator

Another method involves an M-G with a dc motor driving the alternator (Figure 7-13). The dc for the motor is derived from a solid-state rectifier which also charges the system batteries. The one-line diagram of this supply looks very much the same as a solid-state UPS, except the solid-state inverter has been replaced with a rotary inverter.

Copyright © 1999 IEEE. All rights reserved.

Copyright by the Institute Of Electrical & Electronics Engineers Inc
Fri Jul 20 10:37:18 2001

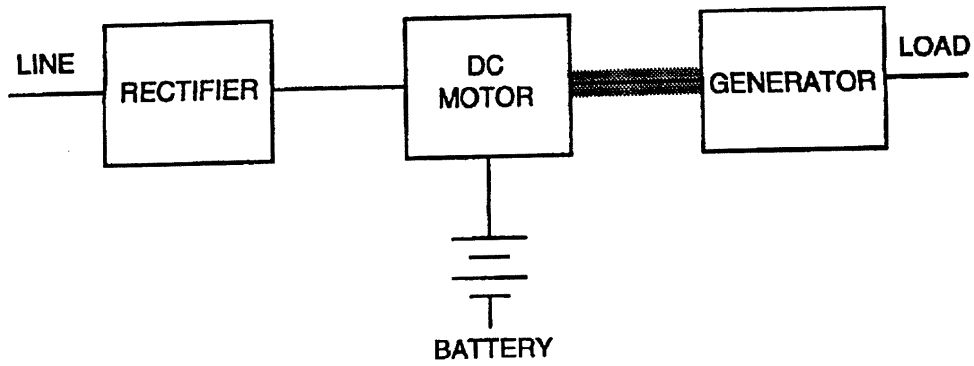

Figure 7-13—Rotary UPS with rectifier/dc motor

The other common method involves the use of a static inverter/motor drive to supply ac power to the motor during utility power outages (Figure 7-14). When utility power is lost, the inverter converts the power from the batteries into 60 Hz ac which is supplied to the input of the motor. This switchover is accomplished during the ride-through time that the inertia of the M-G provides. The inverter can be used as a battery charger during the time that the utility ac is available to charge the battery. Separate battery chargers are also used to perform this function.

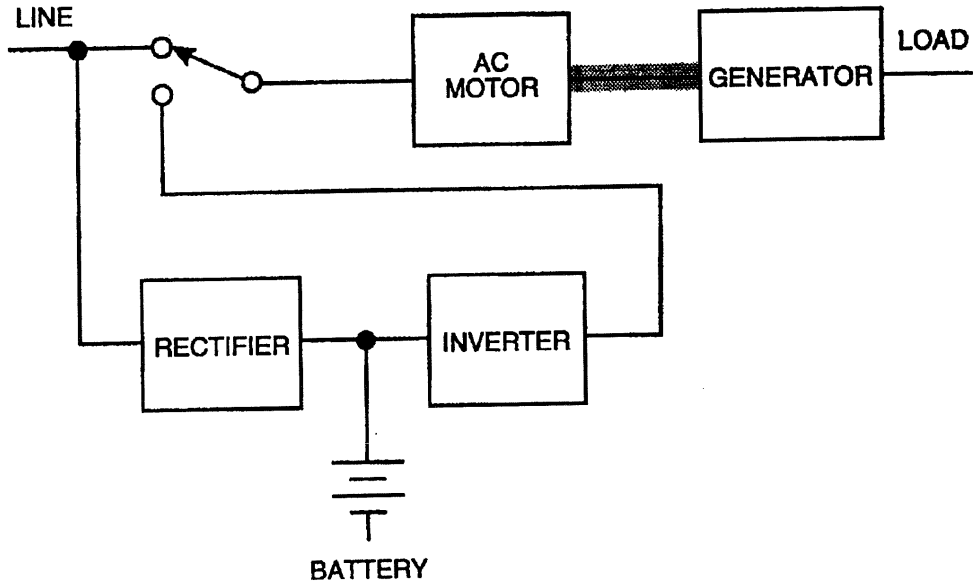

Figure 7-14—Rotary UPS with inverter

Copyright © 1999 IEEE. All rights reserved.

Copyright by the Institute Of Electrical & Electronics Engineers Inc
Fri Jul 20 10:37:19 2001

A bypass transfer switch is usually included with a rotary UPS. These switches can be of the solid-state type or strictly mechanical. The switch transfers the load to the utility for maintenance of the UPS or during a failure within the UPS itself. With synchronous M-Gs, the transfer can be made at any time due to the inherent near phase lock of the output with the utility source.

The amount of current distortion introduced by the rotary UPS is a function of its design. Units without a solid-state rectifier do not introduce harmonics on the source and actually can reduce those already there due to other nonlinear loads sharing the same input service. Units with rectifiers that are used only to charge the batteries will typically introduce significant current distortion during battery recharging with only a small amount after battery has been recharged. A rotary UPS that has a rectifier supplying a dc motor will introduce current distortion based on the type of rectifier and amount of filtering provided. These units are equivalent to static UPSs that utilize similar rectifier sections.

7.2.9.2 Static UPS

The static UPS is a solid-state device that provides regulated continuous power to the critical loads. Static UPSs fall into two basic designs: rectifier/charger, illustrated in Figure 7-15, and line-interactive, illustrated in Figure 7-16.

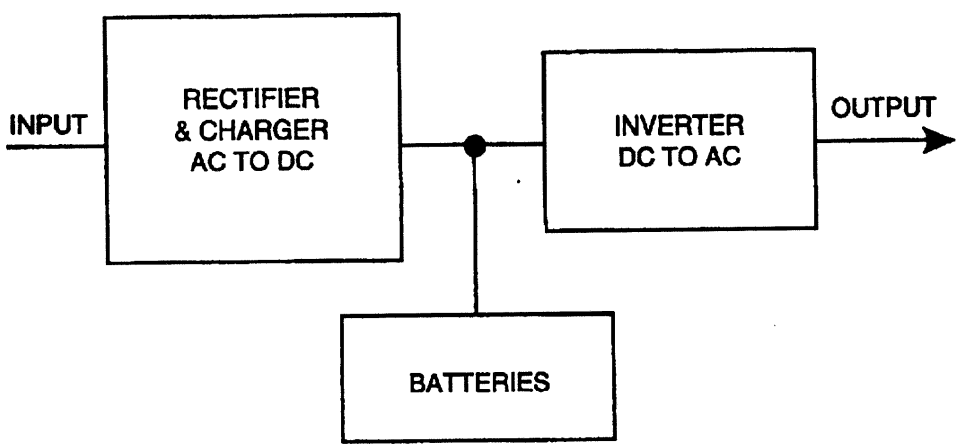

Figure 7-15—Rectifier/charger UPS

In the rectifier/charger (or double conversion) UPS, input power is first converted to dc. The dc is used to charge the batteries and to constantly operate the inverter at full load. In the line-interactive (or single conversion) UPS, utility power is not converted into dc but is fed directly to the critical load through an inductor or transformer. Regulation and continuous power to the critical load is achieved through the use of inverter switching elements in combination with inverter magnetic components, such as inductors, linear transformers, or ferroresonant transformers. Some systems have relatively complicated controls on the inverter and are able to provide improved output voltage regulation. In this case the inverter controls its phasing and duty-cycle to both charge the battery and provide a voltage component to be summed in the

Copyright © 1999 IEEE. All rights reserved.

Copyright by the Institute Of Electrical & Electronics Engineers Inc
Fri Jul 20 10:37:20 2001

transformer. The term "line interactive UPS" comes from the fact that the inverter interacts with the ac line to buck, boost, or replace incoming ac power as needed to maintain voltage control.

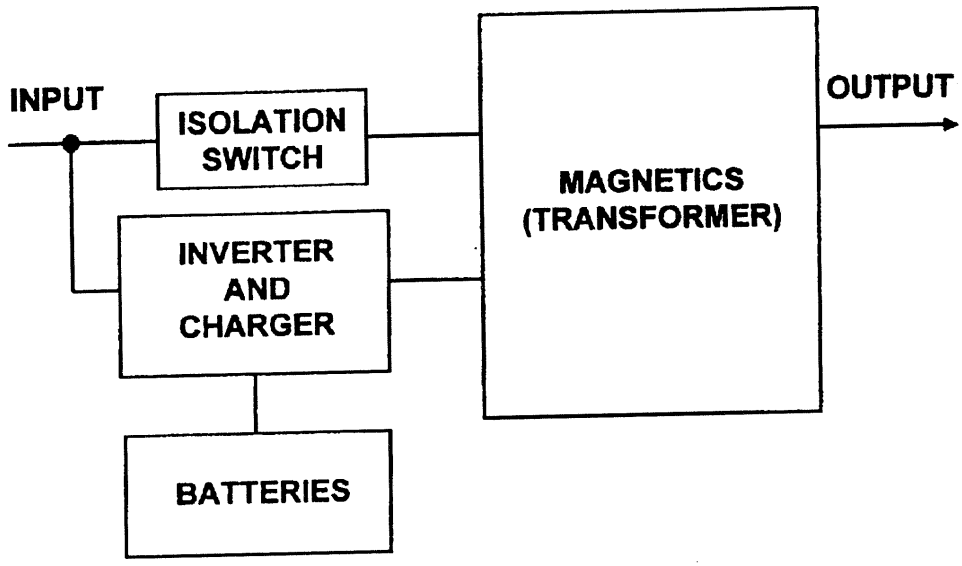

Figure 7-16—Line interactive UPS

7.3 Equipment procurement specifications

Generation of the specification for the required power-enhancement product is a very important part of the procurement of the system. There are a large number of different specification items that are published by the manufacturers. Some of the items are of universal importance to all users and some are of more interest in one application than another. The procurement specification should emphasize those specifications of particular interest for the application. Any items that can have the specification loosened should be treated appropriately in the procurement. In this way the specification defines the system requirements without overspecifying. This approach helps assure the procured products are the best combination of performance and price for the requirements of the particular installation.

The more important product specifications should be discussed in groups, organized according to their area of importance. Specification items are grouped into the categories of installation considerations, reliability considerations, and cost of operation.

7.3.1 Facility planner's considerations

The items in 7.3.1.1 through 7.3.1.9 are in the areas that are of interest to the installation planner. They encompass those items that describe the primary operation of the system. A description of each is given.

Copyright © 1999 IEEE. All rights reserved.

Copyright by the Institute Of Electrical & Electronics Engineers Inc
Fri Jul 20 10:37:21 2001

7.3.1.1 System load rating

This rating is the basic capacity rating of the system. It is expressed in both apparent power (kVA) and power (kW). The power factor rating of any power conditioner should take into account the portion due to phase shift and the portion due to waveform distortion. The crest factor rating that will be discussed in this subclause should be used to determine the conditioner's ability to support loads that have high levels of input current distortion. If the load power factor is anything but 1.0, the actual power (kW) that the system is supplying is different. Most systems are rated at a power factor between 0.7 and 0.9. This means that the actual power rating of the system is less than the kVA rating. Both ratings are important because neither can generally be exceeded at steady-state conditions.

There are several factors that may require that the rating of the power conditioner exceeds the steady-state load requirements. First, many loads require more current during starting than they do under normal operation. In a similar manner, some loads have periodic increased load requirements that should be taken into account when sizing the power conditioning system. In addition, the potential growth requirements in the near future should be considered. Load requirements typically grow with time, and various economies can be achieved if this growth is anticipated and accommodations are made during the initial planning.

The rating of the power conditioner may also vary with the type of load that is applied. Many modern loads have rectifiers or switching inputs that do not draw current in a smooth manner at the input power frequency. This current distortion can cause additional stress on the power conditioner circuits that in turn may affect the rating of the conditioner when supplying these loads. The conditioner manufacturer should specify the rating conditions. The ability to support these nonlinear loads is usually stated as a "crest factor" that describes how much the load current can vary from a pure sine wave while maintaining the system's full rating. In the case of crest factor, a linear load has a factor of 1.414, which is the ratio of the peak value of a sine wave to its rms value. Therefore, a load with a crest factor rating of 2.8 is twice the peak current requirements of a linear load, not nearly three times.

7.3.1.2 Size and weight

The size of the system is important because of the cost or lack of floor space that is available for the system. The weight is important because of floor loading limitations as well as elevator ratings.

7.3.1.3 Air conditioning requirements

These requirements are a function of the efficiency of the system and must be considered when sizing the air conditioning system for the installation. The heat loss is generally specified in British thermal units per hour (Btu/h) or kilowatts. Also included is the recommended operating temperature and humidity range that determines the kind of air conditioning or ventilation system that will be required.

Copyright © 1999 IEEE. All rights reserved.

Copyright by the Institute Of Electrical & Electronics Engineers Inc
Fri Jul 20 10:37:22 2001

7.3.1.4 Audible noise

The amount of noise that is generated varies greatly from one system to another. The noise level is of great importance if the system is to be installed in the computer room or in, or close to, offices. Many systems are available with additional soundproofing or special enclosures to reduce the sound level emitted.

7.3.1.5 Battery configuration and life

There are two main types of batteries (wet-cell and "maintenance-free") used for UPS applications. The original type is the wet-cell battery. This type is used in large installations with long back-up times. Wet-cell batteries are generally installed on open racks, usually in their own enclosed room with separate ventilation from the rest of the facility. Ventilation is required because, under certain conditions, the batteries generate hydrogen gas. Often hydrogen detectors, temperature detectors, showers, and eye washes are required by local code. All of these items add to the cost of the installation. Some of the considerations discussed in the following paragraphs may become more or less significant as battery technology evolves.

The life of the wet-cell battery is affected by the environment and the operating conditions. Most battery manufacturers specify that the average temperature in the battery room should be 25 °C. At low temperatures, the battery capacity (back-up time) is less than normal. The battery capacity and loss of electrolyte increases as the temperature increases. These batteries generally have a specified life of 10–20 years. The rate of internal breakdown within the battery increases with temperature. The effective life of the battery can be significantly shortened by operating at elevated temperatures. Battery life is also a function of the number of discharges and the depth of discharge. Wet-cell batteries in UPS applications can have a useful life on the order of hundreds of discharges.

In recent years, sealed "maintenance-free" batteries have been used in increasing numbers for UPS applications. These units can be housed in cabinets or placed on open racks. They require minimal maintenance during their life. These batteries do not generate significant gas during normal operation. Their low-gassing level allows the battery cabinets to be installed almost anywhere, including on the computer room floor next to the UPS. The special requirements for wet-cell batteries generally are not required. If the batteries are located right next to the UPS cabinet, the amount of cabling required is greatly reduced. All these items generally make the maintenance-free batteries much less expensive to install.

Depending upon design and mission objectives, the rates life of batteries can range from 2 years to 20 years. Their actual life is affected by the same conditions as the wet-cell batteries. By definition, maintenance-free batteries have a limited amount of electrolyte, which is not replenished during their life.

In most operations the batteries are maintained at what is called their float-voltage. This is the voltage that allows the batteries to become fully charged but not overcharged. The battery accepts the amount of charge necessary to maintain full charge and no more. Most UPS batteries are made up of cells that are connected in series to achieve the desired voltage level. Since these batteries are wired in series, the same current flows in each battery. If one battery

 Copyright © 1999 IEEE. All rights reserved.

Copyright by the Institute Of Electrical & Electronics Engineers Inc
Fri Jul 20 10:37:23 2001

tends to self-discharge a little faster than the rest, it will slowly become less charged than the rest. This situation is detected by periodically measuring the voltage across each battery to verify that they are closely balanced. If the voltages vary beyond limits, an equalizing charge is performed. This charge involves raising the charge voltage above the float value for a specified length of time. This charge-cycle forces additional charge current to flow through all of the batteries. The lower voltage cells are brought up to full charge and the others are slightly overcharged. It is often necessary to parallel strings of batteries to achieve the desired amount of back-up time.

Another operating condition common in UPS installations that increases the rate of breakdown is ripple current. Ripple current is caused by the ripple voltage of the battery charger output and by the pulsating current requirements of the inverter. The detrimental effects of ripple current on the battery are mainly a function of the design of the charger and the relative size of the battery as compared to the UPS rating. The ripple current tends to heat the batteries and is equivalent to constantly discharging and recharging the battery a tiny amount. When high ripple current is present at elevated operating temperatures, the battery life can be reduced.

7.3.1.6 Inrush

Inrush is the amount of current that a load draws when it is first turned on. Inrush is generally caused by the magnetization requirements of input transformers and starting requirements of fan motors and is present on most systems irrespective of soft-start feature. Inrush must be considered when sizing the electrical feed to the system (circuit breaker size).

7.3.1.7 Input soft-start

Input soft-start is the time that the input section (rectifier, motor, etc.) of the load requires to go from the off state to carrying the full load of the system. It is of primary importance when the system is to be powered from an engine generator.

7.3.1.8 Input power factor

The input power factor of the system specifies the ratio of input kilowatt to input kilovolt-ampere at rated or specified voltage and load. The power factors of some conditioners are a function of the load, and some are independent of the load. Those that are a function of the load will typically be specified for a unity power factor load that does not represent normal operation. In power systems that utilize phase-controlled rectifier inputs, the input power factor will become lower or less desirable as the input voltage is raised. Other rectifier designs are becoming available that can maintain a constant or unity power factor over their full operating range.

For a given load on the power conditioner, the lower the power factor, the more input current will be required by the system. The wiring to the system and the switchgear depends on the current that is drawn. All other aspects being equal, the UPS with a higher power factor over the operating range can have a lower installation cost.

Copyright © 1999 IEEE. All rights reserved.

Copyright by the Institute Of Electrical & Electronics Engineers Inc
Fri Jul 20 10:37:24 2001

7.3.1.9 Input current distortion

The current that is drawn from the supply by most power systems contains frequency components that are harmonics of the supply frequency. These harmonic currents cause the input current to distort from a perfect sinewave. The amount of this distortion is specified as a percentage. Different rectifier designs create different amounts of current distortion. This current distortion is translated into voltage distortion on the utility line in proportion to the source impedance of the utility feed. This voltage distortion can adversely affect other equipment that is powered from the same source. Lower levels of current distortion cause lower voltage distortions, and other devices are less likely to be adversely affected. Input current distortion is specified for a given set of conditions and can be affected by such factors as input voltage, load, input phase-balance, and source impedance.

7.3.2 Reliability considerations

When one considers the purchase of a power line conditioner to protect a critical load, a primary concern should be the reliability of the system. The principal function of the system is to supply quality power to the critical load in a continuous manner. There are many items that affect the overall reliability of the system. Some of these are discussed in 7.3.2.1 through 7.3.2.2.

7.3.2.1 System configuration

The reliability of a system is very much influenced by its configuration. There are many options that exist to improve the basic reliability of the power converter itself. Some of these items will be discussed in 7.3.2.1.1 and 7.3.2.1.2.

7.3.2.1.1 Parallel systems

The most common reliability enhancement involves paralleling multiple power-conversion modules. Figure 7-17 diagrams a system with three modules. These installations are termed "redundant" since they contain at least one more unit than is required to support the load. The basis for this arrangement is that if one of the power-conversion modules fails or must be taken off line for service, the remaining units are able to support the load. This method can provide significant improvement to the system reliability. The power-conversion modules must be properly designed and installed in order to achieve this method's potential.

Parallel redundant systems can actually be less reliable if the power-conversion units are not tolerant of disturbances and overloads on their outputs. The performance of UPS equipment varies in this regard from one manufacturer to another. Methods of determining specific equipment performance are discussed in 7.3.4.

 Copyright © 1999 IEEE. All rights reserved.

Copyright by the Institute Of Electrical & Electronics Engineers Inc
Fri Jul 20 10:37:25 2001

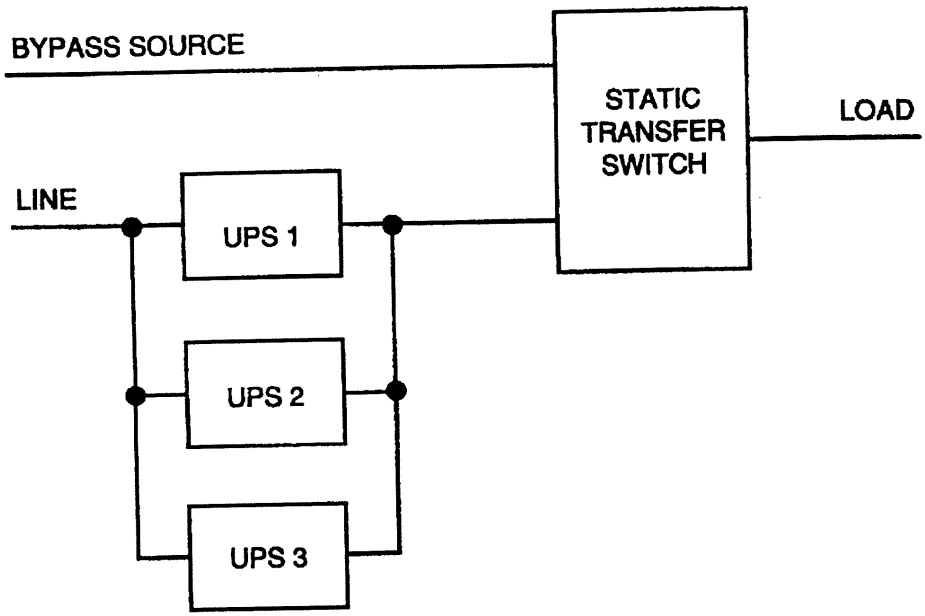

Figure 7-17—Parallel redundant system

7.3.2.1.2 Isolated redundant systems

The basic configuration of an isolated redundant system has two units as shown in Figure 7-18. Each unit is able to supply the full load and contains a static transfer switch. The primary unit that is connected directly to the load has its static switch fed from the secondary unit. The secondary unit's static switch is fed from the utility as are the inputs of the two units. In normal operation, the primary unit supplies the load. If it fails, the load is supplied by the secondary unit through the primary unit's static switch. If the secondary unit fails, the load is supplied from the utility through both static switches. There are other configurations of isolated redundant systems that include more than two modules. They all share the basic concept where one or more modules form a back-up source of conditioned power for one or more other modules.

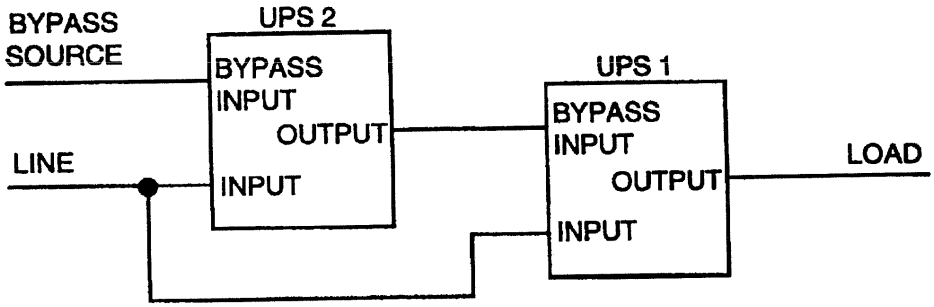

Figure 7-18—Isolated redundant UPS

Copyright © 1999 IEEE. All rights reserved.

Copyright by the Institute Of Electrical & Electronics Engineers Inc
Fri Jul 20 10:37:26 2001

This configuration does not have the same problems that paralleled systems have when a module fails. The faulted module does not have the possibility of pulling down the paralleled unit through excessive fault current. The secondary unit does see a load step equal to the existing load that may cause some transient on the load bus.

7.3.2.2 Product reliability

Many factors are involved in making a product as reliable as possible. These factors include design, component selection, workmanship, and conservative rating of the units. It is very difficult to look at a product and determine its potential for reliable operation. Estimating the relative performance of various products usually requires sorting through reliability information from manufacturers. The following is a discussion of the items that can be considered in determining the reliability of a power line conditioner.

7.3.2.2.1 Calculated reliability mean time between failures (MTBF)

Most manufacturers calculate the reliability of their systems in the same manner that is prescribed for military products. The process involves determining the basic reliability of each component that goes into the system. The reliability estimate is based on field experience and accelerated life testing. The stress that is placed on the device in the application needs to be taken into consideration. Once the reliability of each component is estimated and the total number of each is known, the total system reliability can be estimated. The overall reliability of a system is usually expressed as MTBF. The MTBF is usually expressed in hours, and specifies the average number of hours that can be expected between failures in the system.

The calculated MTBF is only an estimate and may not really define the actual reliability of the product. The inaccuracies come about due to the many variables that are hard to determine. Such items as the stress (peak and average current and voltages, and junction temperatures) on the devices are often hard to determine accurately. Other factors associated with the design are almost impossible to estimate accurately, such as noise susceptibility, effects of accumulated dust combined with humidity, and the thoroughness and correctness of the design. Improper reactions of the system to faults or disturbances can cause the system to fail, but are not included in component reliability. Proper maintenance and installation are also often assumed in MTBF calculations. In general, calculated MTBFs should be used as guides when actual field data are not available.

7.3.2.2.2 Field reliability data

Once a product has been in the field for a period of time, an accurate determination of the operating reliability can be made. This procedure involves keeping track of the number of hours that the installed base of units has operated and the total number of failures that have occurred. MTBF data derived this way can be used to compare the reliability of various systems. Ensure that the numbers from the different manufacturers are derived by the same methods. There are three reliability figures-of-merit for UPSs that should be compared:

a) Individual module;

b) Multimodule; and

c) Total system.

Copyright © 1999 IEEE. All rights reserved.

Copyright by the Institute Of Electrical & Electronics Engineers Inc
Fri Jul 20 10:37:27 2001

First, the reliability of the individual unit or module should be examined. This figure-of-merit is a measure of how often service will be required, and should provide the means to determine the relative service costs between products.

The second figure-of-merit is the reliability of a multimodule, redundant system output. (How often did the power system itself fail to provide power that was within specifications?) This figure-of-merit can be difficult to determine unless a line-disturbance monitor is installed on the critical-load bus. Typically, the frequency of system failure (that required the critical load to be powered from the utility or alternate source) can be determined. This frequency shows how well the manufacturer's methods of providing redundancy actually performs in the field. The ratio of the module reliability and the multimodule redundant system reliability is important. Systems that have effective methods of isolating a failed module before it degrades the critical bus typically show higher ratios between the system and the module figures-of-merit. In most applications this is the most important factor because it reflects how well the load can be supported by the system, independent of the quality of the input power. This ratio is what actually justifies the purchase of a UPS.

The third reliability figure-of-merit is the most commonly stated. This figure-of-merit is the total system MTBF, including the static transfer switch that connects the critical load to the utility in the event of a complete failure of the UPS. The difference between this parameter and the previously discussed ratio gives an indication of how well the static transfer switch logic functions and how well it is integrated into the entire system. The number is somewhat dependent on the reliability of the bypass source, so it will vary with the installation. This parameter does not distinguish between the time that the critical load is powered from the UPS output and the time that it spends on the utility source. Because of this, it is not as important in determining the reliability of the UPS itself as the ratio that does not include the alternate source and the static transfer switch.

7.3.2.2.3 Manufacturer's experience

The field reliability data discussed in 7.3.2.2.2 requires that the manufacturer have a large number of products installed in the field for a long enough period of time to give an accurate picture of the products' reliability. When a new product enters the marketplace, the only data that exist is the calculated MTBF, which is only an estimate of what the actual reliability should be in the field. The actual (demonstrated) system reliability will not be known until sufficient field experience is obtained.

If the product is one that has been on the market for a number of years, the reliability should be easy to determine from manufacturer's data and through contacts with users of the product. It is always a good idea to contact organizations that have used the product for a number of years to see what kind of reliability and general experience they have had with the product and the manufacturer. Since reliability may vary from one application to another, it would be good to talk to several organizations that have similar quality of input power and similar equipment on their critical bus.

If the product is new to the marketplace, the user will have to rely on calculated reliability data and very thorough testing of the product before it leaves the factory as well as after it is installed on site. The manufacturer should demonstrate control of the product configuration

Copyright © 1999 IEEE. All rights reserved.

Copyright by the Institute Of Electrical & Electronics Engineers Inc
Fri Jul 20 10:37:28 2001

and its production processes. A comprehensive quality assurance program should be in place. A purchaser of a new product should review the technical aspects of the manufacturer's operation and be convinced that quality control really exists.

It is difficult to totally test a power-enhancement system in a factory situation. The best that can be done is to test each of the key performance features of the system as completely as possible. After the system successfully passes all the tests, it should undergo an extensive burn-in at the factory and on site before the system is placed in service with the critical load. The burn-in should be completed without failure of the critical bus.

7.3.3 Installation cost considerations

There are a number of factors that affect the final cost of installing a power line conditioner or UPS. These costs should be considered along with the purchase price for each of the possible systems that are under consideration. Some of the factors that can affect the installation costs are discussed in 7.3.3.1 and 7.3.3.2.

7.3.3.1 Location of the installation

There are several options as to where a power line conditioner system can be installed. Installation of smaller systems tends to be rather straightforward and the costs involved are usually not very great. Small UPS typically have sealed maintenance-free batteries that are installed inside the cabinet or can be placed right next to the UPS, which further simplifies the installation. The smaller systems generally feed a limited number of loads so that distribution is less of a problem. The very small units typically have power receptacles into which the loads can be directly connected.

The installation of larger systems is different. These systems tend to be large and generate significant heat and noise. Very large UPS systems have stationary wet-cell type batteries that require that numerous safety precautions be taken, resulting in very significant installation costs. Most of these large systems have been installed in special rooms designed for the UPS or have been placed in existing equipment rooms.

Many of the factors that affect the cost of installation are based on the physical constraints that are placed on the installation by the available space. There are certain items that can somewhat be controlled to lower the cost of installation. The most common ones are described in the following paragraphs.

A new generation of UPS products is emerging that allow alternative installation options. With these products, it is possible to install the entire system on the computer room floor, offering some real advantages. The floor space in the computer room tends to be more expensive than other installation sites. These new products reduce the floor space required due to their compact designs.

In addition, the efficiency of these systems tends to improve with each new generation. Since the heat loss is a function of the system's efficiency, the newer products tend to dissipate less heat than older ones. More emphasis is being placed on the noise level emitted by the system.

 Copyright © 1999 IEEE. All rights reserved.

Copyright by the Institute Of Electrical & Electronics Engineers Inc
Fri Jul 20 10:37:29 2001

The noise level is being reduced by use of baffling, newer fan designs, and switching techniques that place most of the noise above the audible range. These factors make these power products easier to place in areas that are also working areas for personnel.

7.3.3.2 Wire and circuit breaker costs

The cost of the electrical cabling and circuit breakers is a function of the current that the system draws and supplies to the loads. The efficiency of the system as well as its power factor affect the amount of current that the system requires for a given load. The higher the efficiency and the power factor, the lower the current into the system. In some cases these items can make the difference between wire and circuit breaker sizes that will have a significant effect on the installation costs.

The input and load voltages of the system have a large effect on the wiring costs. A 480 V input UPS will draw 43% of the current compared to a 208 V input UPS. If possible, all larger systems should be fed from the highest practical utility voltage. The same is true for the load side. In most cases the user does not have good control of the input requirements of the connected loads. However, even if the actual loads are 208 Y/120 V it may make sense to distribute the UPS output at 480 V and then step it down to 208 Y/120 V near the load. This is especially true for higher capacity systems or when there is a long distance between the UPS and the loads.

7.3.4 Cost of operation considerations

The items in 7.3.4.1, 7.3.4.2, and 7.3.4.3 have the greatest impact on the cost of operation of the system. These items are of general interest to almost all commercial installations.

7.3.4.1 Efficiency

The efficiency of a power system is the relationship between the input power that it draws and the corresponding power that it is able to supply to the load (kilowatt out/kilowatt in). The efficiency of these types of products will vary at different load levels. A value should be obtained for the anticipated load level on the system. The efficiency should reflect the actual operating conditions of a normal system. The conditions under which the efficiency is measured should have all fans, power supplies, etc., operating along with all capacitor bleeder resistors and other power dissipating devices connected. If the efficiency is to accurately reflect the installed conditions, the normal float current into the battery bank should also be taken into account.

The power that is drawn by the system is a function of the load on the system and its efficiency. The poorer the efficiency, the more power that is required to support a given load. This translates into higher operating costs for the less efficient systems. As mentioned earlier, the additional air conditioning costs that result from lower efficiency must also be considered. The less efficient the system is, the more heat it generates. In turn, this heat must be handled by the air conditioning system. This means more energy is required to operate the air conditioning, or possibly an even larger system may be required.

Copyright © 1999 IEEE. All rights reserved.

Copyright by the Institute Of Electrical & Electronics Engineers Inc
Fri Jul 20 10:37:30 2001

7.3.4.2 Reliability

The overall reliability of the system will impact its total operating cost. A system that is more reliable will typically cost less to maintain and will cause fewer failures in the critical bus. It is sometimes difficult to assess the costs of down time and power-induced failures in the critical loads. These costs vary so much from one installation to another that guidelines are even difficult to create. It is safe to say that unreliable operation can offset efficiency advantages and other performance features of a product. An unreliable system is undesirable no matter what other positive features it may have.

7.3.4.3 Maintenance costs

All power systems require some preventative maintenance. This includes checking of the electrical connections within the unit as well as the connections between the batteries, cleaning, recalibration, and general diagnostics. If the installation includes wet-cell batteries their specific gravity and voltages should be measured and recorded. These periodic maintenance activities can be covered by the manufacturer's maintenance agreements.

7.3.5 Specifying engineer's considerations: operational specifications

There are a number of operational specifications that need to be considered while specifying a UPS. Operational specification items that should also be considered are listed in 7.3.5.1 through 7.3.5.8.

7.3.5.1 Load isolation

One of the fundamental functions of a power line conditioner is to prevent its load from being subjected to noise and other disturbances that are present on the input power source. The power line conditioner's ability to isolate the load is usually expressed in decibels (dB) and different values are given for common- and transverse-mode noise. The higher the numerical value of the isolation, the better the load is protected.

7.3.5.2 Input transient suppression

This is the amount of transient suppression that the power line conditioner contains to protect itself from large voltage transients on its input. This is usually specified as to the amplitude and duration (which is a measure of the energy contained) of the transient that can be withstood.

7.3.5.3 Overload capacity and duration

This is a measure of how much margin is designed into the system. This extra capacity is needed to clear faults and provide additional current for starting various loads. Some products exhibit very poor characteristics, which include high distortion and poor voltage regulation, during periods of overload.

Copyright © 1999 IEEE. All rights reserved.

Copyright by the Institute Of Electrical & Electronics Engineers Inc
Fri Jul 20 10:37:32 2001

7.3.5.4 Input voltage range

This is the range of input voltage that the system can operate over. The system should have full capabilities, including charging the battery over this range of input voltages. The wider the range, the more tolerant the system will be to fluctuation in the input line.

7.3.5.5 Output voltage regulation

This specification defines the maximum change in the output voltage that should occur during all transverse modes of operation. It should be specified for all combinations of load changes, input voltages (including the complete loss of input), and during the entire battery discharge. The manufacturers of the equipment on the critical bus should state the acceptable limits for the steady-state regulation for their inputs. These limits should be strictly adhered to.

7.3.5.6 Unbalanced-load regulation

This specification gives the maximum voltage difference between the three output phases that occurs when individual phase loads are different.

7.3.5.7 Output voltage distortion

This specification describes the maximum amount of voltage distortion that will be present in the output of the unit when connected to a linear load. A linear or resistive load is one that draws current from its source that is proportional to the voltage waveform. The specification generally defines the total harmonic distortion as well as the maximum value of the largest harmonic that can be present. Most critical loads are not linear loads, so this specification does not reflect the actual distortion when the system is installed and powering the critical bus. In some cases the actual output distortion can be so great that the critical load may not operate. Some power line conditioner and UPS manufacturers specify a value for output distortion with nonlinear loads. However, without defining the exact type of nonlinear load, the specification is meaningless.

One cannot assume that the product that has the lowest distortion specification for a test performed with a linear load will have the lowest distortion in the actual application. This is due to the differences in the output impedance, at the frequency of the distortion, between power conditioners. It is advisable to test the power line conditioner with the intended load if the actual level of voltage distortion is critical. The resulting amount of voltage distortion can be estimated if one knows the amplitude and spectrum of the load's input current distortion and the output impedance of the power line conditioner at those frequencies.

7.3.5.8 Dynamic response

The output dynamic response of a unit is defined as the deviation that occurs in the output voltage when a load step is applied to the output. Also associated with the deviation is the time that it takes for the output to recover to within normal regulation limits. The specification is an attempt to quantify the disturbance that will occur on the output when a computer or peripheral is started. If the disturbance is too large, the load that is being started or other

Copyright © 1999 IEEE. All rights reserved.

Copyright by the Institute Of Electrical & Electronics Engineers Inc
Fri Jul 20 10:37:33 2001

loads that are being fed from the same critical bus may be adversely affected. The size of the disturbance is usually proportional to the percentage that the load was changed. The recovery time is a measure of how fast the system can respond.

The transient response is usually specified for partial and full load steps. The smaller the deviation and the faster the output voltage recovers to normal, the less likely that the loads will be affected. Most computer systems and other critical loads state the maximum transient that they can withstand. The manufacturer's recommendations should be strictly adhered to.

7.3.6 Transfer characteristics

7.3.6.1 Transfer time

This is the time that it takes a UPS to transfer the critical load from the output of the inverter to the alternate source or back again. Most of this time is typically used in sensing that there is a need to transfer the load. Once sensed, it takes only a few microseconds to activate the static transfer switch.

7.3.6.2 Automatic forward and reverse transfer

It is important that the UPS system be able to automatically transfer in both directions. Many systems rely on the utility source to supply currents that exceed the capacity of the inverter. In this case the load should automatically be returned to the inverter once the load current has returned to within the inverter's capabilities.

7.3.7 Power technology considerations

There are a number of different techniques that are employed by manufacturers today to design the components of the UPS. As new and better semiconductor devices are developed one would expect to continue to see new approaches taken. These technologies are of interest only to the point of what they offer in performance to the user. If a new technology is employed it should have definable advantages to the customer to be worth consideration.

7.3.7.1 Rectifier technology

For many years the rectifier sections of the UPS have been phase-controlled rectifiers that have employed thyristors to rectify and control the output voltage. These systems are well understood and provide dependable performance. This type of rectifier has several drawbacks that can be improved by proper design. The input current distortion in three-phase units will be around 30% if only a six-pulse rectifier is employed. This high level of input distortion can potentially cause problems with other pieces of equipment that are connected to the same input source. The distortion can be improved by using an input transformer in the UPS that has two secondaries that are phase shifted from each other. When these six phases are rectified by a twelve-pulse rectifier, the resulting distortion should be on the order of 13% or less. This is only achievable if the manufacturer uses thyristors in both sides (positive and negative) of the rectifier bridge.

 Copyright © 1999 IEEE. All rights reserved.

Copyright by the Institute Of Electrical & Electronics Engineers Inc
Fri Jul 20 10:37:34 2001

There are several other types of rectifier sections in use today beside the phase-controlled thyristor units. One type employs pulse width modulation (PWM) type switching units using transistors. These units can have advantages in the areas of wider input voltage and frequency ranges, higher input power factors, and lower input current distortion.

7.3.7.2 Inverter technology

Traditionally, most of the inverters in UPS products employ thyristor switching techniques or motor/generators. The thyristor inverters use a number of techniques to control the output voltage and to provide the low-distortion output that is required. These techniques include square-wave, quasi-square-wave, and stepped-wave PWM. Each technique has its benefits in some areas and its limitations in others. The specifications that are typically traded off in these designs are output distortion, transient response, battery discharge voltage range, overload capacity, ability to handle switching loads, and efficiency. Each manufacturer tries to achieve the best combination of the items.

Many older designs typically provide a relatively high output impedance to the harmonic currents that modern switching loads place on the UPS. This causes the output voltage of the UPS to become distorted. The resulting distortion can have a detrimental effect on the loads that the UPS is supplying. To overcome this and to provide some other performance advantages, the industry is producing inverters that use what are called PWM techniques. The level of performance may depend on how the manufacturer has designed the PWM inverter and its controls.

These methods have been around for quite some time but they were not very successful due to the lack of suitable semiconductor devices. The speed and commutation losses of thyristor circuits do not lend themselves to the high switching frequencies that are needed to get the full benefit out of a PWM inverter. The industry now has available to it a vast and ever-increasing assortment of both bipolar and MOS-FET transistors that are well suited for the application.

The newer inverter circuits can be smaller and more efficient than the older designs. Also, because of the high-switching frequency of the power circuits, the output of the inverter can be controlled on a subcycle basis. This subcycle control allows the inverter to respond to the current demands of the load that occur at higher frequencies than 60 Hz. A properly designed PWM inverter can respond in a millisecond or so to changes in current requirements of the load. This includes both current distortion and step load level changes. A PWM inverter of this type can provide a less distorted output when connected to a switching load than other methods.

7.4 Equipment and material specifications

7.4.1 General discussion

The purpose of an equipment and/or material specification is to describe technical performance and physical requirements for a piece of equipment or system that is desired by a customer or user. Typically the specification serves as the technical portion of a purchasing contract. The

Copyright © 1999 IEEE. All rights reserved.

Copyright by the Institute Of Electrical & Electronics Engineers Inc
Fri Jul 20 10:37:35 2001

purchase order defines the business terms of the agreement. The most important aspect of the specification is how well the buyer understands the value of what is described. Specifications do not have to be lengthy and complex to be effective. Understanding the values of a well-written procurement specification is the purpose of this clause.

7.4.2 Using vendor-supplied specifications

The most common method of developing a specification is the use of a manufacturer-prepared product specification. Unless a qualified consulting engineer or experienced user is involved, the use of a vendor's printed specification is the only way to give a detailed description of the product desired. However, it must be kept in mind that a particular vendor's prepared specification describes his product in great detail. Other vendors or manufacturers of a similar product may object to this practice since the specification favors another vendor. In some cases, they may refuse to offer a proposal or bid because they feel the buyer has made his choice of product by virtue of the specification used.

The use of vendor-supplied specifications does not have to reduce the competitive process. The person responsible for the procurement can promote competitive responses by encouraging other vendors to make a proposal for their similar product. A serious competitor will take the time to respond to another manufacturer's specification pointing out the differences between his product and the specified product.

The use of specifications is essential to the procurement process. The buyer can effectively use vendor-supplied specifications "as supplied" or modified, depending on how well the specification describes the product desired. Careful review of the specification prior to issuance will minimize conflict and maximize the value received.

7.4.3 Creative specifications

Writing an effective specification for the procurement of a product or service is a difficult task. The writer must first determine exactly what he or she is trying to procure: a specific product for a specific task or a generic performance criterion. Unless the task is specific or custom in nature, a "performance" type specification will generally provide the best results. By accurately describing the desired performance parameters, more than one vendor or manufacturer can respond with meaningful proposals.

7.4.3.1 Unique or special specifications

Writing a specification to cover a unique or special situation should be avoided, if possible. In the majority of cases where special products are deemed necessary to provide a service or solve a problem, a standard product or service actually exists for that purpose. In most cases, it would be beneficial for the custom specification to permit consideration of other approaches to the solution of the requirement. Specific examples of problem areas that result from unique specifications are given in 7.4.3.1.1 through 7.4.3.1.5.

 Copyright © 1999 IEEE. All rights reserved.

Copyright by the Institute Of Electrical & Electronics Engineers Inc
Fri Jul 20 10:37:35 2001

7.4.3.1.1 Specification conflicts with standard products

The unique specification deviations from standard products can be significant. Major changes may totally discourage vendors from bidding standard products. Under these circumstances the buyer may have to actually promote the proposal of products. The important task may be to determine if the unique requirements are necessary and whether standard products must truly be modified.

7.4.3.1.2 Unknown performance/reliability characteristics

Unique specifications that require extensive modification of standard products may result in reduced performance or reliability in other areas. In the case where a totally new product results, the known "track record" or performance history of a standard product is eliminated. Long-term benefits of standard products may be more important than a unique feature that requires extensive modification.

7.4.3.1.3 Long-term maintenance problems

Requiring a unique product by definition means that a "one-of-a-kind" product may result. Typical manufacturers cannot provide their normal degree of engineering or support documentation that accompanies standard products. The most serious consequence is inadequate spare parts and field service once the product is in use. The long-term result may be reduced to unreliable performance later in the product life cycle, or premature replacement of the product in total.

7.4.3.1.4 Electrical safety listing avoidance problems

One of the most serious ramifications of custom product specifications is the avoidance of product listings (UL, ETL, CSA, etc.) designed to ensure safe operation. The requirements of these agencies demand extensive testing to ensure compliance with accepted standards. Even the slightest change can sometimes impact the right to list a product and may result in the local authority (electrical inspector) refusing to approve the product's installation or operation.

7.4.3.1.5 Increased liability problems

Use of a unique specification can conceivably increase or involve the purchaser in the liability associated with a failure of a special power system. In the case of liability claims, standard products with a proven track record are the responsibility of the manufacturer if the product was applied or used properly. Development of a unique product may relieve the manufacturer of a portion of his liability if a major problem develops.

7.4.4 "Mixed" vendor specifications

When the standard specifications of several vendors are available, there is a strong temptation to select the best features and functions from each vendor and combine these into a single specification. Even though the chosen feature from each source is a standard item for that vendor, the overall specification ends up being very unique. The most typical occurrence of

Copyright © 1999 IEEE. All rights reserved.

Copyright by the Institute Of Electrical & Electronics Engineers Inc
Fri Jul 20 10:37:37 2001

this situation is with functional items, such as operator controls, alarms, status indicators, and other individual components.

Each manufacturer can generally recognize the specific features of his competitors used in the specification. Getting each vendor to address the specification in detail becomes more difficult. Generally too much time and effort are spent on "selling against" items in the specification rather than on user benefits. This approach generally leads to greater confusion on the part of the purchaser, and in turn makes a value selection more difficult.

7.4.5 Generic specifications for multiple vendors

A true generic specification that can be proposed by more than one vendor is possible. A specification that addresses the functions or results desired from a product is typically called a performance specification. This type of specification concentrates on how each system would perform in the critical areas. In the case of a UPS system, as an example, the main performance issues would be the following:

a) Rating (kVA/kW);

b) Dynamic response (voltage regulation);

c) Overload capability;

d) Efficiency; and

e) Failure-mode performance.

In a "performance" specification the hardware items allow vendors to present the ways in which their product satisfies the specification. The support items or "software" (test procedures, quality assurance, maintenance agreements, etc.) can be tailored to the specific project. The items determine the degree of support required on a project-by-project basis.

7.5 Verification testing

This clause generally applies to large systems where the effort and expense of verification testing is justified. For these systems, there needs to be some method devised to determine that the product being procured does in fact meet the specifications for which it was purchased. This function is usually performed through acceptance testing at the manufacturer's facility before shipment and on site after installation. The manufacturer can supply what he or she considers to be a valid test of the product's performance, which then can be modified to cover those items of particular importance to the specific installation.

The factory acceptance should verify that the power conditioner meets all of its significant specifications in the environment of the manufacturer's test facility. The on-site acceptance should verify that the system has not been degraded by the transportation and installation at the new site. It should further verify that the system functions properly in its new environment with the actual load that it was intended to support. This phase of testing is very important

 Copyright © 1999 IEEE. All rights reserved.

Copyright by the Institute Of Electrical & Electronics Engineers Inc
Fri Jul 20 10:37:38 2001

because it determines if all of the effort that went into the specifying and earlier testing has actually resulted in a system that will perform the desired function.

Subclauses 7.5.1 through 7.5.10 describe some of the most important tests that should be performed in general terms. The unit under test is assumed to be a UPS. Delete or modify those tests that do not apply to the type of equipment being tested.

After final assembly and quality control (including normal factory tests) are completed, the manufacturer should perform the following UPS tests witnessed by the customer's representative.

7.5.1 Visual inspection

A qualified individual can gain insight by simply looking at the components used in the power conditioner and the methods and workmanship of assembly. The trained individual should inspect to see that the cabinets are of adequate strength to withstand the stresses of transportation, installation, and seismic activity. Components should be high quality and properly mounted to assure mechanical security and adequate heat transfer. The wiring should be of the proper rating, properly terminated, and secured to prevent damage. Bus bars should be properly mounted and braced to resist movement during fault conditions. These areas and others are significant to the long-term reliability of the product.

7.5.2 Load tests

This test should be performed to verify that the UPS is correctly connected and all functions operate properly. The test should include adding blocks of load in 25% increments to full load at a specified power factor. Observe and record the output voltage amplitude, waveform, steady-state regulation, surges, and frequency. Check the operation of all controls, meters, and indicators.

7.5.3 Transfer test

This test should be performed to verify that the UPS will transfer from the inverter to the alternate source and back without generating disturbances on the load bus beyond specified limits. At no load and at full load, manually transfer the load to bypass source and then back to the UPS. Observe and record the same parameters as in the load test above. In addition, the transfer time in each direction should be determined and recorded.

7.5.4 Synchronization test

This test should be performed to verify that the UPS is able to synchronize to alternate sources within the specified limits. The frequency of the alternate source should be varied outside of acceptable limits. An attempt to manually transfer to this source should be made. The alternate source should then be returned to nominal frequency and, after the specified synchronization time, a manual transfer should be attempted. The results of these tests, including surges on the output, should be recorded.

Copyright © 1999 IEEE. All rights reserved.

Copyright by the Institute Of Electrical & Electronics Engineers Inc
Fri Jul 20 10:37:39 2001

7.5.5 AC input failure and return test

This test should be performed to verify battery operation. Perform this test by interrupting and restoring the ac power source to the UPS. The steady-state voltages, transient voltages, and frequencies should be recorded. The system should be allowed to operate from the battery, at rated load, to determine performance and specified battery time.

7.5.6 Efficiency test

This test should be performed to verify that the UPS is operating at the specified level of efficiency. The ac-to-ac efficiency of the UPS shall be measured and recorded at full and partial loads. This is done by measuring the real power input and output and dividing the two figures.

7.5.7 Load performance test

This test should be performed to verify that the UPS has specified capability at the extreme operating conditions. Tests should be performed at full load and rated power factor with the output voltage set to its maximum rated level and at the lowest specified dc bus voltage. Record the output voltage and frequency.

7.5.8 Load imbalance test

This test should be performed to verify that the UPS is capable of supplying unbalanced loads per specification. For three-phase systems, the phase-to-phase, and the phase-to-neutral voltages and phase displacements should be measured and recorded with a balanced full load on the UPS output. The maximum specified load imbalance should be applied and the same parameters should be measured and recorded.

7.5.9 Overload capability test

This test should be performed to verify that the UPS is capable of supplying specified overloads. The maximum specified overloads (current and time) should be applied to the UPS and its output voltages and current should be measured and recorded.

7.5.10 Harmonic component test

This test should be performed to assure that the UPS does not generate harmonics in excess of specification. The harmonic content of the input current and the output voltage should be measured and recorded at full rated load.

7.6 Equipment maintenance

7.6.1 Preventative maintenance

It is generally accepted that equipment with moving parts requires periodic maintenance in order to assure reliable operation. Such items as cleaning, lubrication, and adjustments for wear are common in the upkeep of mechanical equipment. What may not be as obvious is

 Copyright © 1999 IEEE. All rights reserved.

Copyright by the Institute Of Electrical & Electronics Engineers Inc
Fri Jul 20 10:37:40 2001

that power electronic equipment requires periodic maintenance as well. A proper schedule of periodic inspections will enhance the equipment's reliable operation.

The following list outlines some of the operations that are performed during preventive maintenance of power conditioning equipment:

a) Check security of all electrical connections (including batteries);

b) Clean units and batteries and replace air filters;

c) Check battery cell voltages and specific gravity (wet cells);

d) Lubricate components as required;

e) Visually check power connections and components for signs of overheating, swelling, leaking, etc.;

f) Perform calibration of meters, alarm levels, etc.;

g) Functionally check the operation of all components;

h) Perform system performance checks.

The list above is for illustration only; the manufacturer's recommendations should be followed strictly. By performing this type of maintenance on a scheduled basis, it is possible to find and remedy potential problems before the system's operation is affected.

7.6.2 Wear and aging of components

We have come to expect that mechanical components wear during operation. This wear can usually be seen or measured. Some electrical components "wear" during operation as well, but it is sometimes more difficult to detect.

Rotary or M-G products experience wear in their bearings and, in some cases, brushes. Fan motors also experience bearing wear. Circuit breakers, switches, and contactors experience wear in their mechanisms as well as the electrical contacts. Many components, such as motors, transformers, and capacitors, experience degrading of internal insulation over their life.

The rate of degradation is a function of the design of the component and the level of stress to which it is subjected. A given component may have a much longer operational life in a conservatively designed product than it would in a design where its stress level is higher. The design stress level of a component is related to how close the component is operating to the manufacturer's maximum specifications. Typical parameters involved include peak voltage, rms current, and temperature and power limits. In most cases, the designed stress level interacts with the operational environment to determine the ultimate life of the component. High-temperature environments tend to shorten the life of nearly all components. The

Copyright © 1999 IEEE. All rights reserved.

Copyright by the Institute Of Electrical & Electronics Engineers Inc
Fri Jul 20 10:37:41 2001

life of some components, such as electrolytic capacitors and batteries, are greatly affected by operation at elevated temperatures.

7.6.3 Restoring system operation after failure

There will be failures even in a well-maintained system. When failures occur, it is important to take the proper steps to restore the system operation as soon as possible. The following lists the general order of events that should occur when there has been a failure:

a) Determine what has failed and why it failed;

b) Restore power to load through the use of maintenance bypass switchgear or other means;

c) Replace or repair the failed component or assembly;

d) Restart the system and perform operational checks;

e) Place the system back in service.

If the critical load has lost power, the first step is to restore power. This is often performed through use of bypass switchgear that connects the utility power directly to the load. It is generally advisable to close a manual bypass switch even if the load is being supplied through a static switch or other automatic switch.

Clearly the next step is to determine what has failed in the system. Modern power-conditioning systems provide alarm annunciation and some provide effective diagnostics to help identify the source of the problem. The ease of determining what has failed and the actual repair of the system varies with its design. It is typically easier to isolate the problem and to replace complete assemblies as opposed to individual components. System designs that have made good use of modular repair concepts generally are easier and faster to put back in service.

The second part of this step is to determine why the failure has occurred. There is normally a cause for each failure, and it needs to be determined and dealt with to avoid recurrences of the same failure. This can be difficult because the cause is often transient and no longer present. The source of the problem could be internal to the equipment, in the utility feed, the building power distribution, or the load itself. It is often not possible to devote the time necessary to determine the cause because of the need to restore the system to operation. In that case, steps should be taken after the system is in service to determine and eliminate the source of the failure.

Once the failed part or assembly is identified and repaired or replaced, it is advisable to perform sufficient operational tests to assure that all areas of the system are now functioning properly. Other components may have been damaged and need to be repaired. Once the system is fully checked out it can be placed back in service. Accurate records of the failure and all associated data should be kept to aid in any future correlation of this failure with others. The actual cause of the failure may not be determined until the data from this failure is compared to other failure data and operational records.

 Copyright © 1999 IEEE. All rights reserved.

Copyright by the Institute Of Electrical & Electronics Engineers Inc
Fri Jul 20 10:37:42 2001

7.7 Distribution power quality solutions/customer power products

New technologies utilizing power electronics-based concepts are being developed for advanced distribution to provide additional options for the utility and its large commercial and industrial customers. Known as *customer power products*, the technologies described provide the utility with the ability to offer individual customers or groups of customers (industrial or office parks) better power quality on utility distribution systems. A customer power specification may include provisions for

— Fewer power interruptions;

— "Tight" voltage regulation, including short duration sags or swells;

— "Low" harmonic voltage distortion.

The family of power electronic devices being offered to achieve these customer power objectives includes

a) Solid-state circuit breaker (SSB) to provide power quality improvement through instantaneous current interruption thereby protecting sensitive loads from disturbances that conventional electromechanical circuit breakers cannot eliminate.

b) Solid-state transfer switch (SSTS) to "instantaneously" transfer sensitive loads from a disturbance on the normal feed to the undisturbed alternate feed.

c) Dynamic voltage restorer (DVR) to protect a critical load from disturbances (e.g., sags, swells, transients or harmonics) originating on the interconnected transmission or distribution system.

d) Distribution static condenser (STATCON) to protect the distribution system from the effects of significant harmonics-producing loads.

Figure 7-19 shows how these devices can be deployed on the distribution system to provide power quality improvement at the distribution feeder level for sensitive customers.

7.7.1 SSB: description and applications

Manufacturers have incorporated advanced current interruption technology, utilizing high power SSB, to solve most of the distribution system problems that result in voltage sags, swells, and power outages.

When combined with a current-limiting reactor or resistor, the SSB can rapidly insert the current-limiting device into the distribution line to prevent excessive fault current from developing from sources of high short-circuit capacity (e.g., multisourced distribution substations).

Copyright © 1999 IEEE. All rights reserved.

Copyright by the Institute Of Electrical & Electronics Engineers Inc
Fri Jul 20 10:37:44 2001

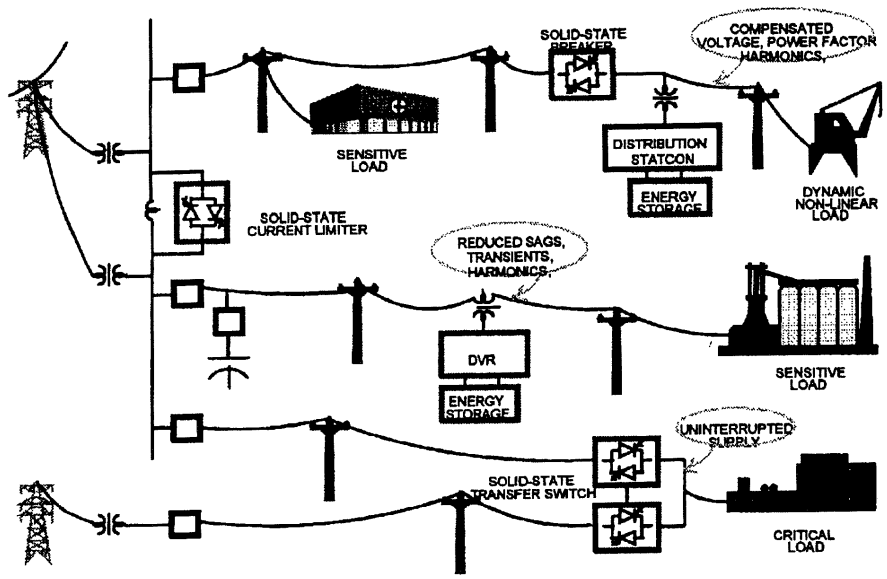

Figure 7-19—Customer power products

The new 15 kV class SSB is designed to conduct inrush and fault currents for several cycles and to disconnect faulty source-side feeders in less than 1/2 cycle. The capability of the SSB to provide this performance is dependent primarily on the rating and operating characteristics of the power semiconductor devices used for the ac switches making up the circuit breaker. At the power levels associated with 15 kV and higher voltage class systems, commercially available gate turn-off (GTO) thyristors and conventional thyristors (SCRs) can be used for the ac switch.

Various applications are shown in Figure 7-20.

7.7.2 SSTS

SSTSs are capable of providing uninterruptible power to critical distribution-served customers. Solid-state, fast-acting (subcycle) circuit breakers can instantaneously transfer sensitive loads from a normal supply that experiences a disturbance to an alternate supply that is unaffected by the disturbance. The alternate supply may be another utility primary distribution feeder or a standby power supply operated from an integral energy storage system. In this application, the SSB acts as an extremely fast conventional transfer switch that allows the restoration of power of specified quality to the load within 1/4 cycle.

The SSTS consists of two three-phase SSBs, each with independent control. The status of the three individual phase switches in each SSB is individually monitored, evaluated, and reported by continuous real-time switch control and protection circuits. The operation of the two SSBs is coordinated by the transfer switch control circuit that monitors the line

Copyright © 1999 IEEE. All rights reserved.

Copyright by the Institute Of Electrical & Electronics Engineers Inc
Fri Jul 20 10:37:45 2001

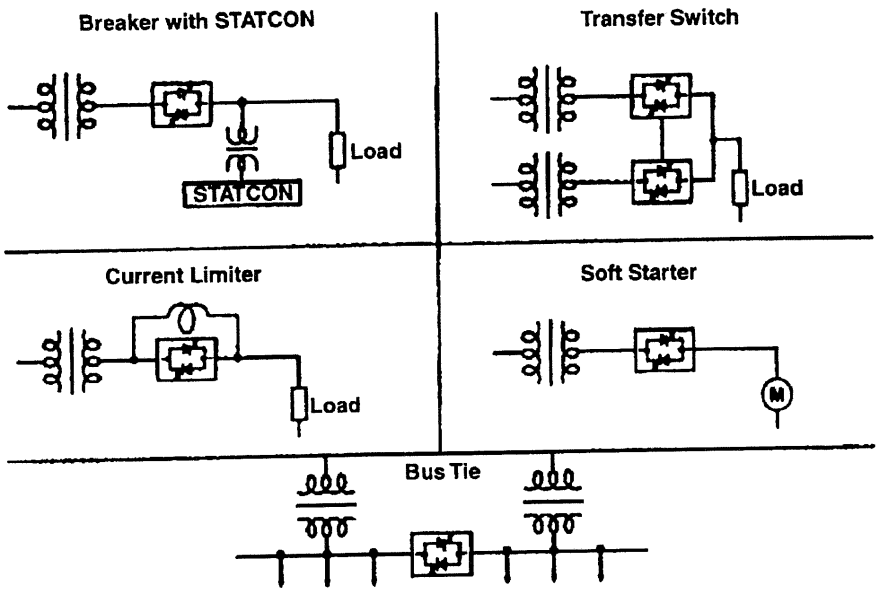

Figure 7-20—Potential applications for solid state breakers

conditions of the normal and alternate power sources and initiates the load transfer in accordance with operator selectable criteria.

The SSTS can be provided with either SCR or GTO switches depending upon the specific load transfer speed requirements.

SSTS voltage and current ratings are being developed for 4.16–34.5 kV and 300–1200 A continuous.

System protection practices should be accommodated by the SSTs available control modes depending upon the critical load requirements and utility preferences/practices.

7.7.3 DVR

The DVR is a solid-state dc-to-ac switching power converter that injects a set of three single-phase ac output voltages in series with the distribution feeder, and in synchronism with the voltages of the distribution system. By injecting voltages of controllable amplitude, phase angle, and frequency (harmonic) into the distribution feeder in instantaneous real time via a series injection transformer, the DVR can "restore" the quality of voltage at its load-side terminals when the quality of the source-side terminal voltage is significantly out of specification for sensitive load equipment.

The reactive power exchanged between the DVR and the distribution system is internally generated by the DVR without any ac passive reactive components (i.e., reactors and capacitors). For large variations (deep sags) in the source voltage, the DVR supplies partial power to

Copyright © 1999 IEEE. All rights reserved.

Copyright by the Institute Of Electrical & Electronics Engineers Inc
Fri Jul 20 10:37:45 2001

the load from a rechargeable energy source attached to the DVR dc terminal. The DVR, with its three single-phase independent control and inverter design, is able to restore line voltage to critical loads during sags caused by unsymmetrical line-to-ground, line-to-line, double line-to-ground, as well as symmetrical three-phase faults on adjacent feeders or disturbances that may originate many miles away on the higher voltage interconnected transmission system.

During normal line voltage conditions following the sag, the energy storage device is recharged from the ac system by the DVR. Even without stored energy, the DVR can compensate for the variations of terminal voltage due to load variations by injecting a lagging voltage in quadrature with the load current, thus providing continuously variable series capacitive line compensation. The DVR can also limit fault currents by injecting a voltage vector during the fault that opposes the source voltage and maintains the fault current to an arbitrarily low value.

Connection to the distribution network is via three single-phase series transformers, thereby allowing the DVR to be applied to all classes of distribution voltages. At the point of connection, the DVR, within the limits of its inverter, provides a highly regulated clean output voltage.

The DVR can also reduce the level of harmonic voltages on the feeder that would otherwise be seen by the load.

7.7.4 Distribution STATCON

The STATCON is a solid-state dc-to-ac switching power converter that consists of a three-phase, voltage-sourced forced air-cooled inverter. In its basic form, the STATCON injects a voltage in phase with the system voltage, thus providing voltage support and regulation of VAR flow. Because the device generates a synchronous waveform, it is capable of generating continuously variable reactive or capacitive shunt compensation at a level up to the maximum MVA rating of the STATCON inverter.

The STATCON can also be used to reduce the level of harmonics on a line. The use of high-frequency pulse-width modulated inverters to synthesize the necessary signal means that the device can inject complex waveforms to cancel out voltage harmonics generated by nonlinear loads. Because the STATCON continuously checks the line waveform with respect to a reference ac signal, it always provides the correct amount of harmonic compensation. By a similar argument the STATCON is also suitable for reducing the impact of some voltage transients.

When coupled with the SSB (installed on the line side of the STATCON) and energy storage, the STATCON can be used to provide full voltage support to a critical load during operation of the feeder circuit breaker that protects the distribution feeder on which the STATCON is installed. In the event of a source disturbance or feeder circuit-breaker operation, the SSB isolates the STATCON and the connected load downstream from the circuit breaker and the STATCON supports the entire load from its energy storage subsystem. The amount of load that can be supported is determined by the MVA rating of the inverters, and the length of time that the load can be maintained by the amount of energy storage provided.

Copyright © 1999 IEEE. All rights reserved.

Copyright by the Institute Of Electrical & Electronics Engineers Inc
Fri Jul 20 10:37:47 2001

Connection to the distribution network is via a standard distribution transformer thereby allowing the STATCON to be applied to all classes of distribution voltages. At the point of connection, the STATCON, within the limits of its inverter, provides a highly regulated stable terminal voltage.

7.8 Bibliography

Additional information may be found in the following sources:

[B1] FIPS Pub 94-1983, Guideline on Electrical Power for ADP Installations.[2]

[B2] IEEE Std 446-1995, IEEE Recommended Practice for Emergency and Standby Power Systems for Industrial and Commercial Applications (*IEEE Orange Book*).[3]

[B3] IEEE Std 449-1998, IEEE Standard for Ferroresonant Voltage Regulators.

[B4] Woodley, N. H., Sarkoze, M., Sundaram, A., and Taylor, G. A., *Customer Power: The Utility Solution.* International Conference on Electricity Distribution, Brussels, Belgium, May 1995.

[2]FIPS publications are available from the National Technical Information Service (NTIS), U. S. Dept. of Commerce, 5285 Port Royal Rd., Springfield, VA 22161.

[3]IEEE publications are available from the Institute of Electrical and Electronics Engineers, 445 Hoes Lane, P.O. Box 1331, Piscataway, NJ 08855-1331, USA (http://www.standards.ieee.org/).

Copyright © 1999 IEEE. All rights reserved.

Copyright by the Institute Of Electrical & Electronics Engineers Inc
Fri Jul 20 10:37:49 2001

Chapter 8
Recommended design/installation practices

8.1 Introduction

The proliferation of electronic load equipment in industrial and commercial environments has placed a demand on all parties involved in the design and installation of electrical systems to provide reliable power, grounding, and electrical protection for these devices. This demand is compounded by the fact that most electronic load equipment in these facilities are interconnected via metallic data/telecommunications cables that also require special design and installation considerations. This chapter deals with engineering principles that relate to performance requirements of modern electronic load equipment. Recommended practices may appear to restrict certain design, installation, or service efforts. Such restrictions are generally necessary to promote the desired performance levels of electronic load equipment within the confines of applicable local, state, and federal codes and regulations. Other standards and recommended practices may also be applicable. To assure all codes and regulations are met, prudent designers, installers, or service people should determine what specific codes or regulations apply at the location prior to proceeding with design or installation work.

Desired performance of electronic load equipment typically depends on various items, such as the proper selection and arrangement of the electrical distribution system, the proper selection and installation of electrical distribution equipment, the proper selection and installation of a grounding system for both the electrical power system and the electronic load equipment, and the proper selection and application of surge protective devices.

Successive generations of electronic load equipment are more and more immune (to some degree) to recognized susceptibility problems. A good example is electronic load equipment manufactured to meet European Community 1996 electromagnetic immunity requirements. As such, some electronic load equipment may in fact be fairly immune to recognized electrical disturbances occurring at typical magnitudes. For example, electronic load equipment using a nonmetallic interface (such as fiber-optics) may work satisfactorily in a quite electrically hostile industrial environment. Electronic load equipment that is less susceptible to electrical disturbances is desirable, but it does not alleviate adherence to the recommendations given in this standard.

Distributed electronic load equipment such as computer networks and telecommunications circuits are further subjected to disturbances arising from voltage differentials between different grounding locations and different power sources. These conditions are covered in Chapter 9.

Electrical distribution systems serving commercial and industrial environments should be designed to support modern nonlinear electronic load equipment. Some equipment may specifically generate harmonic load currents that can adversely affect system components designed for sinusoidal load currents. Harmonic load currents act on the impedance of the electrical distribution system to create distortion of the voltage waveform. The magnitude of

Copyright © 1999 IEEE. All rights reserved.

Previous page is blank

Copyright by the Institute Of Electrical & Electronics Engineers Inc
Fri Jul 20 10:37:50 2001

the voltage distortion will typically depend on the magnitude and harmonic profile of the load current as well as the impedance of the distribution system and the power source. Some equipment may generate both voltage and current distortion. Both single-phase and three-phase electronic load equipment can generate harmonics. Three-phase electronic equipment (such as variable frequency drives and uninterruptible power supply systems) can cause excessive voltage notching due to the commutating action of converter elements. Single-phase electronic equipment (principally switching mode power supplies) can cause "flat-topping" of the voltage waveform due to nonlinear characteristics of high peak currents and associated large crest factors. Some loads are capable of creating significant voltage waveform distortion that may affect the entire electrical distribution system at the premises. In some cases, the current waveform distortion may affect the electric utility system. In these situations, other electronic load equipment and/or other loads may be adversely affected by the resulting distorted voltage waveform. These effects can include equipment/component damage, operational problems, and the inability of the equipment to be properly powered. Electronic equipment may contain internal circuits that monitor the system voltage waveform for the purposes of timing, or detecting an impending power failure or other out-of-specification power quality parameters. Distorted voltage waveforms may cause equipment to go into unwanted operational modes such as automatic shutdown. In addition, sensing circuits may produce memory overflow conditions or slow down equipment operation due to repetitive logging of power-quality anomalies.

8.1.1 Safety

Electrical safety is the overriding concern of all electrical design work. Safety is basically governed by the electrical codes and standards as adopted by government agencies, commercial entities, and good engineering judgment on the part of the designer. Safety requirements cannot be compromised to satisfy the special power and grounding requirements of electronic load equipment. Equipment manufacturer's requirements must not take precedence over safety requirements. In general, equipment that cannot operate in a satisfactory manner without violating applicable electrical safety requirements is not suitable for use in typical applications. Such equipment is considered to be designed improperly. As such, the equipment should be properly modified by its original equipment manufacturer, or authorized field service or engineering personnel so that it can work in a safe manner. The equipment should not be placed into service if the wiring and installation does not meet all applicable safety codes and regulations.

The exclusive use of electrical and electronic equipment that is covered by a product safety test or nationally recognized testing laboratory (NRTL) listing is generally the first line of defense against electrical safety problems. With very few exceptions, the use of listed equipment is also required by applicable electrical codes, such as the National Electrical Code® (NEC®) (NFPA 70-1999)[1]. The equipment should be installed and used for the specific purpose for which it was listed. Listed equipment is normally intended for attachment to a power system that is installed in compliance with the NEC. Factory tests performed by the original equipment manufacturer (OEM) are typically conducted with the subject equipment con-

[1]Information on references can be found in 8.8.

Copyright © 1999 IEEE. All rights reserved.

Copyright by the Institute Of Electrical & Electronics Engineers Inc
Fri Jul 20 10:37:51 2001

nected to a power system that is compliant with the NEC. Performance of equipment on a power system that is not compliant may not be satisfactory.

8.2 Equipment room wiring and grounding

Unless otherwise defined, the term *equipment room* shall be used to describe rooms housing computer-based equipment such as information technology equipment or data processing equipment. Creation of an equipment room that meets the requirements of Article 645 of the NEC permits the designer to utilize flexible wiring methods within the room that would otherwise not be permitted. Related design information is also presented in NFPA 75-1999. It is recommended practice that an equipment room, per Article 645 of the NEC, and NFPA 75-1999 descriptions, be created and maintained where large electronic systems, information technology systems, or automatic data processing systems are to be installed.

8.2.1 NFPA 75-1999

This document provides specific requirements of interconnecting cables and other items used in conjunction with the NEC. It also cross-references the NEC, NFPA 780-1997, and numerous other important NFPA references. NFPA 75-1999 does not apply to areas other than designated equipment rooms and their directly related support areas (e.g., media storage areas).

8.2.2 UL 1950-1998

This standard has provisions for listing power conditioning, distribution, and control equipment that are

a) Connected by ac branch circuits (not feeders) under 600 V rating;

b) Not installed as a part of the premise mechanical or electrical systems; or

c) Installed only as a UL 1950-1998 listed part of a listed electronic computer/data processing system that is comprised of a single or multiple vendor-provided set of electrical or electronic load units.

UL 1950-1998 also contains the listing requirements for all interconnecting cables for listed units of the electronic computer/data processing system. Cord assemblies and interconnecting cables listed to this standard are specifically stated to be suitable for installation within the space under a cellular raised floor, with or without that space being used for heating, ventilation, air conditioning, and process cooling airflow (see 1.5 of UL 1950-1998).

8.3 Electrical power system selection considerations

Reliable and proper operation of electronic load equipment depends on providing an electrical distribution system specifically designed and installed to meet the power and grounding requirements of the equipment. The electrical distribution system should also be arranged to minimize service interruptions; provide flexibility for growth and maintenance; and provide

Copyright © 1999 IEEE. All rights reserved.

Copyright by the Institute Of Electrical & Electronics Engineers Inc
Fri Jul 20 10:37:52 2001

continuous, reliable power under all desired conditions. All parties involved in the design, construction, and installation of the facility should consider all interrelated items, including selection of power system voltage, arrangement of the electrical distribution and branch circuit systems, connectivity of electronic systems, analyses of electrical system and load interactions, and compatibility of alternate/emergency/standby power systems.

8.3.1 Selection of system voltage

The selection of the ac supply system voltage typically begins at the service entrance of the facility. In most commercial environments in the U. S., the utility supplies three-phase power at 480 Y/277 V (or 600 Y/347 V) or 208 Y/120 V. In industrial environments, the utility may supply three-phase power at even higher voltages such as 4160 V, 13 800 V and higher. The magnitude of the voltage will typically depend on the size of the facility, the load conditions, and the voltage ratings of the utilization equipment in the facility. In some cases, the facility owners may design, install, and maintain their own medium-voltage electrical distribution system. Refer to 8.3.2.1.1 for a list of the different power system arrangements typically utilized in site distribution systems.

Recommended practice is to provide distribution power in most facilities at 480 Y/277 V (or 600 Y/347 V) rather than at the actual utilization equipment level of most electronic load equipment (208 Y/120 V). Electrical distribution systems operating at 480 Y/277 V (or 600 Y/347 V) have the following benefits over 208 Y/120 V systems:

a) The source impedance of 480 Y/277 V systems are typically less than 208 Y/120 V systems. This characteristic provides a more stable source with better voltage regulation, and minimizes voltage distortion due to the nonlinear load currents.

b) 480 Y/277 V systems are less susceptible to on-premises generated disturbances. Step-down transformers (and other power enhancement devices) for 208 Y/120 V utilization equipment help attenuate disturbances originating on the 480 V system.

c) 480 Y/277 V systems distribute power at lower currents, which result in lower heat losses in feeders. 480 Y/277 V systems may also decrease material and labor costs associated with installing long feeder circuits.

Step-down transformers (and other power enhancement devices) may be located physically close to the electronic load equipment to minimize the buildup of common-mode voltage. Delta-connected transformer primaries trap balanced triplen harmonic currents generated on the secondary side by nonlinear electronic load equipment. This action serves to reduce distortion of the voltage waveform at the 480 Y/277 V level.

It is not recommended practice to step-up the voltage from the service entrance by means of a locally installed transformer in order to obtain a higher power system voltage for the electrical distribution system serving electronic load equipment. Although this can be done in certain cases, it is also possible that less satisfactory results can occur than if the system voltage at the service entrance was used.

Copyright © 1999 IEEE. All rights reserved.

Copyright by the Institute Of Electrical & Electronics Engineers Inc
Fri Jul 20 10:37:53 2001

Due to the generally lower impedance of 480 Y/277 V distribution systems, higher short-circuit currents may be available throughout the system. Overcurrent protective devices with higher interrupting capabilities and equipment with higher withstand ratings may be required.

In some situations, electrical distribution at 208 Y/120 V is unavoidable. This may be due to limitations of the utility or facility to provide higher voltages. As previously noted, nonlinear electronic load equipment may cause undesirable voltage distortion that can adversely affect the entire premises. In these situations, a system analysis may be performed to determine proper mitigation techniques such as the installation of isolation transformers, and other power conditioning or filtering equipment located close to the electronic load equipment.

8.3.2 System arrangement

Arrangement plays an important role in the reliability, flexibility, and maintainability of the electrical system serving electronic load equipment. The type of system arrangement selected is typically affected by the competing objectives of balancing the issues of costs vs. reliability and flexibility. Typically, as the need for reliability increases, the associated costs of the electrical system also increases. Modern electronic equipment requires continuous, reliable power from the power system source all the way to the branch circuit outlet. The selected arrangement of the serving power system, the service entrance, the building electrical distribution system, and the branch circuits should serve to minimize adverse interactions between various loads in the facility.

8.3.2.1 Arrangement of power system and service entrance

There are many methods for providing electrical service to different facilities. Utilities can supply facilities with different incoming line voltages and different system configurations depending on the needs of the facility. In some situations, the facility owners will design, install, and maintain their own medium-voltage electrical system.

8.3.2.1.1 Types of power systems

The following types of power systems can serve the facility in the order of least to most reliable (and least to most costly):

- Simple radial system;
- Expanded radial system;
- Primary selective system;
- Primary loop system;
- Secondary selective system;
- Secondary spot network;
- Ring bus.

Reliability of the power system should be judged on the ability of the system to provide continuous power to the facility, to provide stable regulated voltage, and to be flexible enough for future expansion needs and for routine maintenance needs that require de-energizing portions

Copyright © 1999 IEEE. All rights reserved.

Copyright by the Institute Of Electrical & Electronics Engineers Inc
Fri Jul 20 10:37:54 2001

of the system. The subject of various power system configurations and associated reliability and cost considerations are discussed in detail in IEEE Std 141-1993 and IEEE Std 241-1990.

8.3.2.1.2 Considerations for locating the power service entrance

The location of the incoming service entrance should be carefully considered. Consideration should be given to the location of accessible grounding electrodes in order to provide grounding of the power system as close as practicable to the service entrance equipment. Important consideration should also be given to the location of other services such as telecommunications. Power systems, telecommunications metallic systems, cable television metallic systems and other metallic systems (such as a lightning protection system) must be effectively grounded and inter-system bonded to each other. Even when grounding electrodes are effectively bonded together into one conductive ground structure, potential differences may occur between different systems. For example, the installation of the power service entrance at one end of the building and the installation of the telecommunications entrance facility at the other end of a building may still cause unacceptable voltages to appear between the power and telephone systems during transient events (such as lightning and power circuit faults). Recommended practice is to install the power service entrance, the telecommunications cable entrance, and other facilities for incoming metallic systems as physically close as practicable to each other and to a grounding electrode system. This type of configuration serves to reduce potential differences between systems under both steady-state and transient conditions. It also provides an effective grounding means for surge protective devices connected to the different systems. It should be recognized that multiple service entrances may be used for purposes of diversity, reliability, and redundancy. The electrodes for these systems shall be bonded together in accordance with the NEC. Further information on telecommunications and distributed computing is given in Chapter 9.

8.3.2.2 Arrangement of in-building electrical distribution system

Arrangement of the building electrical distribution system depends on factors such as the selection of system voltage and the power system configuration. It also depends on the types, the ratings, and characteristics of the electronic load equipment. Electronic load equipment that is sensitive to voltage variations or requires uninterruptible power sources may require one of the power enhancement devices discussed in Chapter 8. Other equipment may have characteristics that can adversely affect other loads on the same circuit or feeder. These loads may be linear loads, such as motors with their associated inrush currents, or nonlinear loads, such as static power converters and their associated distorted harmonic voltages and currents. Recommended practice is that equipment which is required to support electronic load equipment and the associated operation of a facility (such as heating, ventilation, air conditioning, and process cooling equipment), should be powered via separate feeders and/or panelboard-branch circuits (see Figure 8-1). It is vital that the building electrical distribution system be properly interfaced with the branch circuits. Branch circuits should be arranged to ensure all desired performance levels over and above those already provided by meeting safety requirements.

Copyright © 1999 IEEE. All rights reserved.

Copyright by the Institute Of Electrical & Electronics Engineers Inc
Fri Jul 20 10:37:55 2001

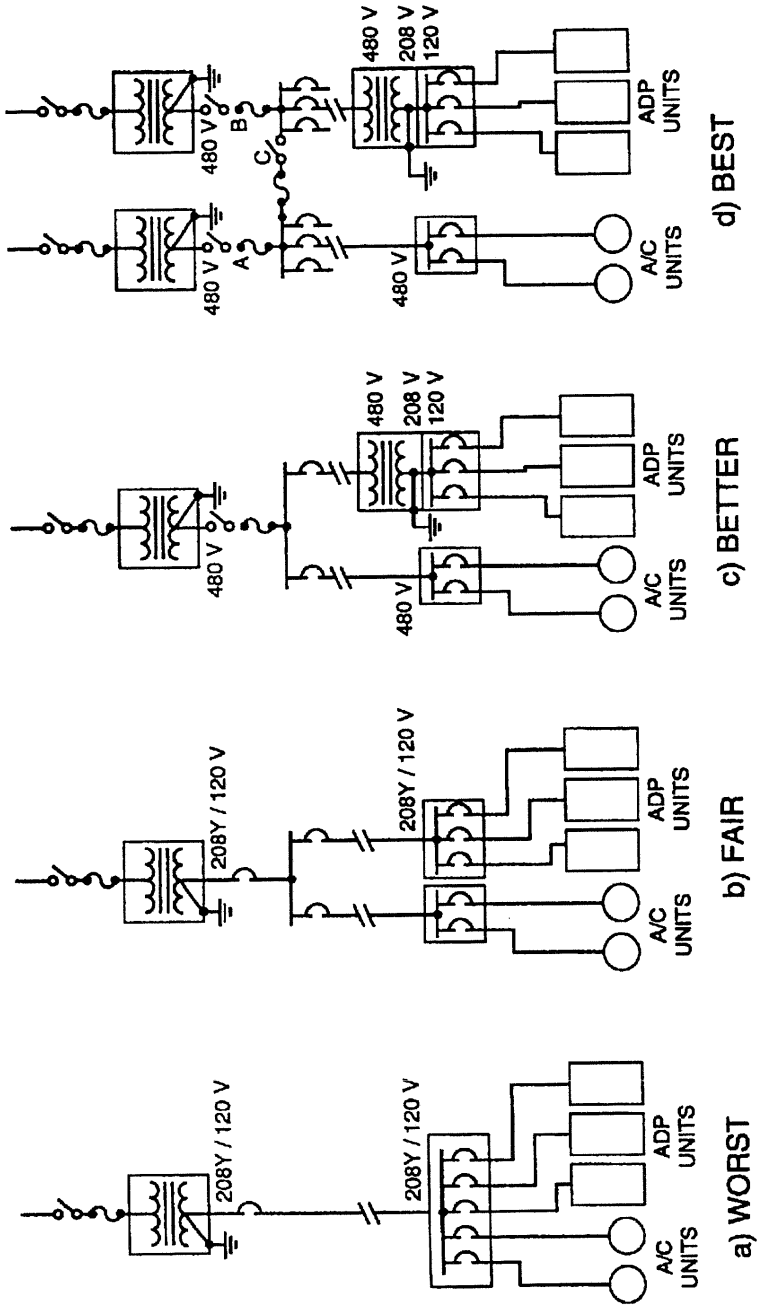

Source: Based on FIPS Pub 94-1983.

Figure 8-1—Recommended separation of electronic load equipment power distribution from support equipment power distribution

Copyright © 1999 IEEE. All rights reserved.

Copyright by the Institute Of Electrical & Electronics Engineers Inc
Fri Jul 20 10:37:57 2001

8.3.2.2.1 Three-phase vs. single-phase systems

Some power conditioning and electronic load equipment are operable only from a three-phase power source. Often single-phase equipment can be operated directly from a single-phase component of a three-phase system. However, these alternatives should be carefully determined before selecting an electrical system design. The acceptable voltage limits of all equipment must be determined and carefully evaluated to ensure proper operation on the electrical system into which it is installed. Some equipment may have features such as internal taps or other adjustments that will allow it to accept common utilization voltages.

When evaluating the choice between three-phase and single-phase systems, consideration should always be given to the fact that three-phase systems may generally support larger loads with greater efficiency. In addition, the source impedance of three-phase systems is generally lower than single-phase systems, which is important to minimize voltage waveform distortion due to nonlinear load currents. Three-phase power may also be derived from single-phase systems. However, the derivation of three-phase power from a single-phase system is not always practical and is not recommended. Certain methods of converting a single-phase circuit to supply three-phase loads such as capacitor phase shifters are considered inappropriate for electronic load equipment and may damage these loads per IEEE Std 141-1993. Still other methods, such as utilizing single-phase motors to drive three-phase generators, may be used to convert single-phase to three-phase. Even so, special precautions should be observed such as balancing the load among the three phases.

Most three-phase electronic load equipment cannot tolerate the application of single-phase power to its input. The resulting downtime and equipment damage can be extensive. Because fuses and circuit breakers generally cannot prevent all types of single-phasing conditions, recommended practice is that electronic phase-failure or voltage-unbalance relays be installed where necessary to mitigate single-phasing events.

8.3.2.2.2 Feeder circuits

Feeder circuits connecting switchboards to panelboards and other interconnected equipment may be in the form of busway or cable. The ampacity and length of these circuits may be quite large. Associated fault currents may be of great magnitude depending on the voltage of the feeder circuit, impedance at the fault location, and the impedance of the feeder source. Faults occurring on feeder circuit conductors generally involve the equipment grounding conductor. Therefore, particular attention should be directed to minimizing voltage drops associated with both the load currents and the anticipated fault currents. Recommended practice is to provide dedicated feeder cable circuits consisting of phase conductors, neutral conductor (where applicable), and insulated equipment grounding conductor(s) in effectively grounded and bonded metallic conduit, raceway, or cable assemblies when they serve electronic load equipment. A properly grounded and bonded system is necessary to facilitate the operation of overcurrent protective devices when a ground fault occurs. A fully enclosed, dedicated busway (without taps) is also a recommended practice when the ampacity of the circuit justifies the cost. Dedicated feeder circuits avoid problems that often result from multiple loads being connected at different locations to the same feeder. Multiple loads may adversely interact with each other via the commonly shared feeder circuit wiring impedances. Where shared

 Copyright © 1999 IEEE. All rights reserved.

Copyright by the Institute Of Electrical & Electronics Engineers Inc
Fri Jul 20 10:37:59 2001

feeder cable circuits or busway (with taps) are used to serve electronic load equipment, a separately derived source (such as an isolation transformer or other power conditioner) may need to be installed for each tap serving electronic load equipment.

8.3.2.2.3 Branch circuit interface to electronic load equipment

Recommended practice is to interface certain configurations of electronic load equipment to the building electrical distribution system via a dry-type shielded isolation transformer (or other power enhancement device). This is especially important where two or more separate power systems serving electronic load equipment are not referenced to the same ground reference as the electronic load equipment. The isolation transformers provide system voltage matching, and also create a separately derived source. Recommended practice is to install the isolation transformers as close to the branch circuit panelboard and associated electronic load equipment as practicable. In addition, these transformers shall be properly selected and installed. Details on selecting isolation transformers manufactured specifically to supply nonlinear electronic load equipment (K-factor rated) are given in 8.4.1. Details on proper grounding of the transformers are given in 8.5.2. Isolation transformers also come equipped as part of power distribution units that also contain internally mounted branch circuit panelboards. Accordingly, the power distribution unit is also a recommended practice for interfacing the electrical distribution system with electronic load equipment. Details on selecting power distribution units are given in 8.4.10.

8.3.2.3 Arrangement of branch circuits

Panelboards serve the branch circuits that supply the utilization equipment. Panelboards that serve electronic load equipment should be placed in the same area as the electronic load equipment, and bonded to the same ground reference used for the electronic load equipment. This location philosophy is recommended for any panelboard that serves other loads in the same area with the electronic load equipment, such as lighting heating, ventilation, air conditioning, and process cooling equipment. Panelboards shall be properly selected and installed. Details on selecting panelboards manufactured specifically to supply nonlinear electronic load equipment and recommended installation practices are given in 8.4.2. Branch circuit receptacles are typically the point of attachment of the premises' wiring system to the electronic load equipment. In addition to design requirements, the branch circuit shall be installed in a workmanlike manner with materials and devices listed for the purpose by a nationally recognized testing laboratory (NRTL) as explained in the NEC.

When supporting simple loads, common practice is to share both feeder and branch circuit wiring with loads of unlimited variety. This practice may be found extended to the placement of various separate circuits into a commonly shared conduit or other form of raceway. These approaches are typically based on economics, and normally, there is little fear of load incompatibility on shared circuits serving simple loads. However, electronic load equipment may be susceptible to interaction problems with other load equipment and steps shall be taken to minimize such interactions. The simple arrangement of multiple electronic load equipment sharing phase, neutral, or equipment grounding conductor wiring paths (including conduits and raceways) may produce unwanted interactions.

Copyright © 1999 IEEE. All rights reserved.

Copyright by the Institute Of Electrical & Electronics Engineers Inc
Fri Jul 20 10:38:00 2001

8.3.2.3.1 Dedicated circuits

Recommended practice for branch circuits supporting electronic load equipment is to install dedicated circuits for electronic load equipment. A dedicated circuit is one that has a separate neutral conductor for the circuit, has one or more devices connected to it, and has an equipment grounding conductor that may or may not be common to other circuits. Splicing of conductors should be avoided or minimized to the greatest extent practicable. The dedicated circuit should include an insulated equipment grounding conductor and should be run in effectively grounded metallic raceway or metallic cable assembly dedicated to that circuit to minimize unwanted interaction problems with other circuits. When raceways are used to transport large number of circuits, the individual phase, neutral, and equipment grounding conductors for each circuit should be bundled together. The neutral-to-ground voltage measured at the load should be minimized by installing separately derived sources (i.e., transformers, power distribution units, etc.) as close to the load as possible. For economic reasons, similar classes of loads may share circuits if they are known to be compatible. Office work station areas should be designed to accommodate one separate, dedicated branch circuit wiring and receptacle for electronic load equipment and another separate wiring and receptacle circuit for convenience loads or high impact loads such as electric pencil sharpeners, portable electric heaters and fans, water coolers, laser printers, and copy machines. This recommendation on the panelboard branch circuit system is similar to the feeder circuit requirements shown in Figure 8-1.

8.3.2.3.2 Shared circuits

Shared circuits are those circuits that share phase and/or neutral conductors. A type of unwanted interaction associated with shared phase conductors is the operation of an overcurrent protective device due to a fault or overload condition on one individual piece of equipment, which then shuts down other connected loads. A type of unwanted interaction associated with a neutral conductor shared by three different single-phase circuits may be excessively high neutral-to-ground voltages and neutral currents. Other types of unwanted interaction may be complex and difficult to diagnose. Some loads may interact due to their physical location on the circuit. Other loads may be susceptible to transient voltages and currents that intermittently occur at tapping points on multioutlet branch circuits or prefabricated assemblies in response to $L\ di/dt$ effects. Such events are often initiated by normal load-switching operations on the power system and by the effects of lightning currents on the building electrical distribution system.

8.3.3 Engineering studies

8.3.3.1 Analyses of harmonic currents and voltages

Refer to IEEE Std 519-1992 for a general discussion of harmonic currents. Recommended practice is for all power distribution systems intended for use with electronic load equipment comply with IEEE Std 519-1992 and IEEE Std 399-1997 guidelines. Calculation or estimation of load harmonic profiles is a necessary requirement when installing power factor correction equipment, selecting K-factor rated transformers (refer to 8.4.1.8), or derating existing conventional transformers.

Copyright © 1999 IEEE. All rights reserved.

Copyright by the Institute Of Electrical & Electronics Engineers Inc
Fri Jul 20 10:38:01 2001

Improvements in power factor may be desired for financial reasons (to lower utility costs associated with power factor penalties) or operational reasons (to lower system losses, increase system reserve capacity, or improve voltage conditions). Extreme caution should be used when applying capacitors. The manner in which they are applied can cause resonance conditions that can magnify harmonic levels and cause excessive voltage distortion. Power factor correction equipment may be applied directly at or close to the facility service entrance, or as close as practicable to the load equipment. The location of the power factor equipment will depend on economic reasons, as well as operational and design considerations. Thorough analysis of distribution system characteristics and load characteristics should be made prior to applying power factor correction capacitors to determine what effect harmonic currents will have on the system, and to determine proper harmonic mitigation techniques. Refer to IEEE Std 141-1993 for further discussion on application of power factor correction capacitors.

It is recommended practice to measure and record the harmonic profile of load currents at the transformers serving the load. When the harmonic profiles of individual loads at downstream locations are measured, there is a tendency to calculate a higher than necessary K-factor. This is also the case in new installations where the current harmonic profile is estimated from typical individual pieces of electronic load equipment based upon experience or data supplied by the OEM. Due to cancellation, the combined contribution to K-factor of several loads is always less than the sum of individual loads. This reduction may be substantial when there is a large number and a diversity of nonlinear load types. Figure 8-2 shows an example of how harmonic levels vary in a typical electrical distribution system. Note that the level of harmonic current distortion decreases from the individual electronic load equipment to the branch circuit panelboards, through delta-wye stepdown transformers, and upstream to the power source. However, when loads are removed from the electrical distribution system, the cancellation benefit produced by these loads is also removed. In many cases, this will not be a problem for a transformer that is conservatively loaded or is K-factor rated. It may be a problem if the load or K-factor rating is marginal.

Cancellation results when harmonics produced by different loads are phase-shifted relative to each other. Impedance in branch circuit wiring, as well as isolation transformers or series inductors and shunt capacitors that may be incorporated in the loads, shift harmonic currents. A delta-wye transformer serving single-phase nonlinear loads randomly distributed among the three phases will trap the balanced triplen load harmonics in the primary winding. This may substantially reduce the triplen harmonic currents and the related current and voltage distortion that would otherwise appear on the primary side.

It is difficult to predict a harmonic diversity factor without modeling the nonlinear loads and the electrical distribution system. Computer programs and methods that allow modeling and simulation are becoming available. With more experience, these computer analysis tools are expected to provide diversity factors for typical loads in industrial and commercial power systems. For new installations, where such diversity factors are not available, recommended practice is to monitor the load current distortion and diversity relative to the load mix in a comparable facility.

Copyright © 1999 IEEE. All rights reserved.

Copyright by the Institute Of Electrical & Electronics Engineers Inc
Fri Jul 20 10:38:02 2001

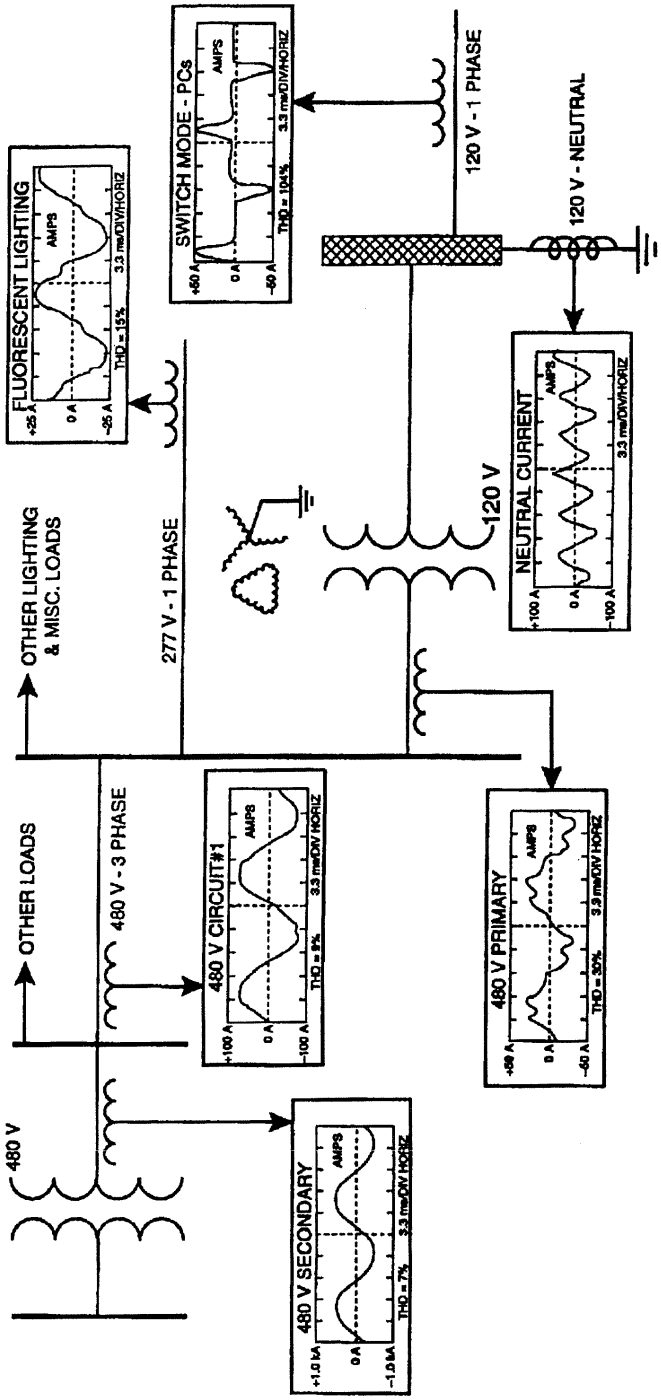

Figure 8-2—Example distribution of harmonic levels in a facility ac distribution system

Copyright © 1999 IEEE. All rights reserved.

Copyright by the Institute Of Electrical & Electronics Engineers Inc
Fri Jul 20 10:38:04 2001

8.3.3.2 Analyses of steady-state and transient voltage conditions

Maintaining proper operating voltage is essential when serving electronic load equipment and associated equipment. Inadequate voltage may affect the performance of electronic load equipment or risk equipment damage. Improper voltage at the input to UPS systems or static bypass circuits can cause operational problems or synchronization problems.

8.3.4 Alternate/standby power requirements

Most facilities that support electronic load equipment have emergency power systems, preferred and alternate feeder circuits, uninterruptible power supplies with bypass circuits, or a combination of these items. The purpose of these different system configurations is to provide the most reliable and redundant power system available. However, these systems require careful attention to minimize adverse interactions between emergency generator systems and downstream electronic load equipment, and to ensure the proper interconnection of grounded circuit conductors between systems. Detailed information on system grounding requirements of UPS systems are discussed in 8.5.2.1.

8.3.4.1 Standby generator systems

Incompatibility issues regarding emergency standby generator systems and downstream electronic load equipment are gaining more recognition in modern power systems. UPS systems and electronic load equipment can be very susceptible to voltage waveform distortion and frequency variations. The distortion of the voltage waveform is primarily a function of the magnitude and harmonic content of the load current and the impedance of the upstream electrical distribution system. Standby generator systems generally have a much higher impedance than the utility system. Therefore, the voltage waveform distortion typically increases when loads are fed by standby generator power. One of the most common incompatibility situation is with generator systems and downstream UPS systems. These situations can range from problems with the UPS inverter trying to synchronize to the static bypass circuit to the UPS input failing to accept the input voltage and thus causing the UPS system to go to battery power. In this latter condition, the voltage distortion typically improves when the load is fed from battery power (the load is now on battery and not acting on the impedance of the generator system) and the UPS input accepts the line voltage. Once again, voltage distortion can increase when the loads are powered via the UPS system, and the UPS cycles back and forth on battery power. Recommended practice is to provide the standby generator manufacturer with information on the type, rating, and characteristics of the electronic load equipment. Many generator manufacturers and UPS manufacturers have guidelines for sizing emergency generators when supplying UPS systems. This rating will typically depend on the type and size of the UPS system. In general, the standby generators should have the following characteristics to minimize adverse interactions when supplying nonlinear loads:

Copyright © 1999 IEEE. All rights reserved.

Copyright by the Institute Of Electrical & Electronics Engineers Inc
Fri Jul 20 10:38:04 2001

a) Isochronous electronic governor to regulate frequency. These governors typically maintain frequency regulation within 0.25% of the setting, as opposed to approximately 3% for mechanical governors.

b) Permanent magnet excitation system or filtering means to isolate the voltage regulator power circuit from the distorted waveform.

c) Generators with a 2/3 pitch stator winding design to minimize third harmonic waveform distortion.

d) Low subtransient reactance to minimize voltage waveform distortion.

8.3.4.2 Transfer switch arrangements

Recommended practice is for all emergency and standby systems intended for use with electronic load equipment to be designed per IEEE Std 446-1995. This standard details recommended means of achieving interconnection of prime and backup ac supply sources via transfer switches. In particular, this reference clarifies the very important issues surrounding the grounding and interconnection of the grounded circuit conductor of two ac systems that are to be switched between systems such as a UPS system, engine-driven generator, or both.

The preferred configuration for three-phase systems serving electronic load equipment is the use of three-phase, three-wire circuits (with equipment grounding conductors) serving three-pole transfer switches, which in turn feeds isolation transformers (or other power conditioners that meet the requirements of a separately-derived system) located as close as practicable to the electronic load equipment (see Figure 8-3).

8.4 Equipment selection and installation considerations

The reliability of the electrical distribution system serving electronic load equipment depends upon proper equipment selection and installation. The guidelines in 8.4.1 through 8.4.12 are recommended for selecting and installing such equipment.

8.4.1 Dry-type transformer

Recommended practice is to use electrostatically shielded isolation-type transformers as the basic means of interface between the building electrical distribution system and electronic load equipment. Electronic load equipment known to be nonsusceptible either by designed-in immunity or independence of the serving power circuit may not require this transformer interface to the building electrical distribution system. Autotransformers do not provide isolation and should not be used. Three-phase transformers supporting nonlinear loads should be selected such that their windings share a common core (E-core). Banked single-phase transformers are not recommended to support nonlinear loads since they may saturate their cores and overheat due to dc and triplen harmonic currents on the neutral.

 Copyright © 1999 IEEE. All rights reserved.

Copyright by the Institute Of Electrical & Electronics Engineers Inc
Fri Jul 20 10:38:05 2001

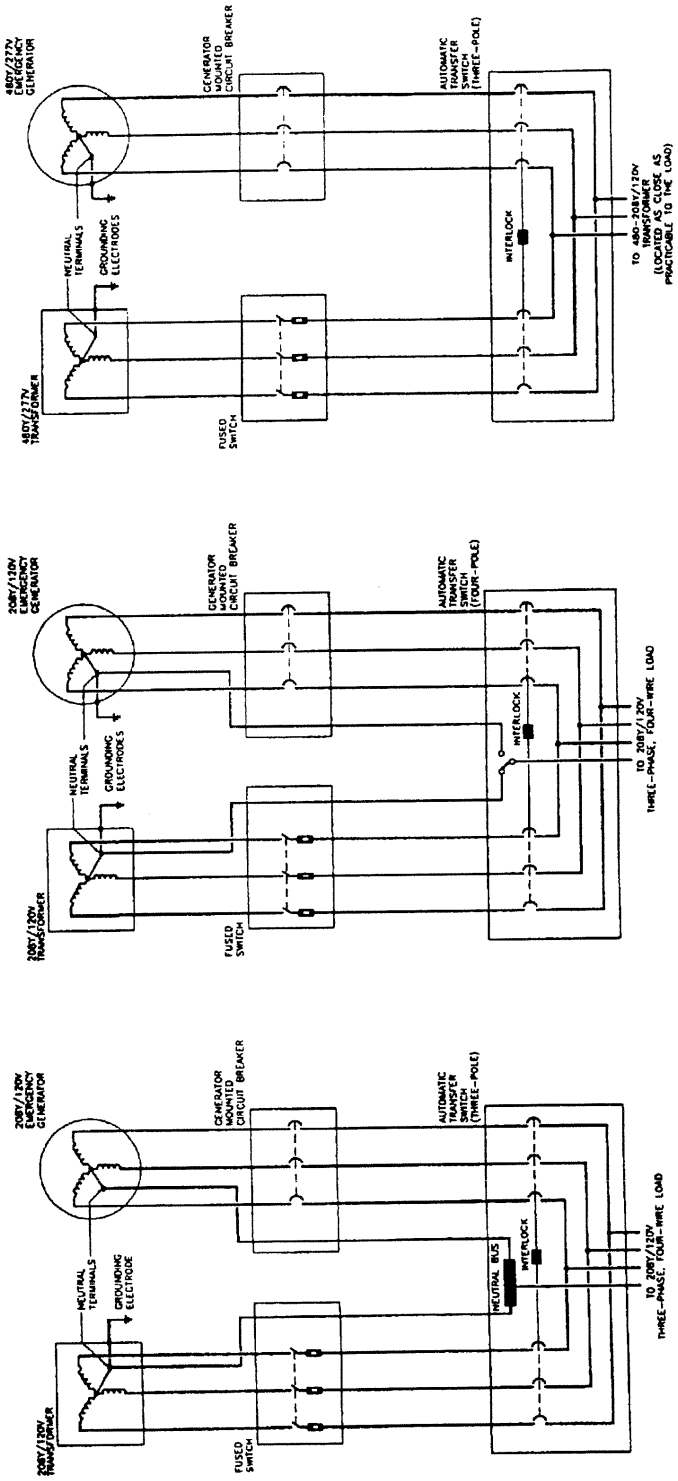

Figure 8-3—Recommended transfer switch arrangement serving electronic load equipment

Copyright © 1999 IEEE. All rights reserved.

Copyright by the Institute Of Electrical & Electronics Engineers Inc
Fri Jul 20 10:38:06 2001

8.4.1.1 Location

Recommended practice is to install transformers as close to the branch circuit panelboard and associated loads as practicable. For example, they should be installed and bonded to the same ground reference as the electronic load equipment. Figure 8-4 illustrates the recommended philosophy for locating isolation transformers that serve electronic load equipment.

8.4.1.2 Wiring methods

Proper routing of the primary and secondary conductors to the transformer and within the transformer is necessary to receive all the benefits of the isolation transformer, especially higher frequency noise reduction. Recommended practice is to route primary wiring in a separate conduit or raceway from the secondary wiring. It is also recommended practice to separate the input and output wiring inside the enclosure as much as practical. Additionally, the associated phase, neutral, and equipment grounding conductors should be installed bundled together. This technique reduces the unwanted stray coupling between the primary and secondary conductors, and induced currents in equipment grounding conductors due to stray magnetic flux generated by the transformer.

8.4.1.3 Grounding methods

Equipment and system grounding shall comply with the NEC. Insulated equipment grounding conductors are recommended to be installed in both primary and secondary circuits. Proper grounding is required to achieve the benefits of an isolation transformer. The secondary neutral terminal and bonding jumper, the grounding electrode conductor, the electrostatic shield and frame, and all equipment grounding conductors should terminate to a common equipment grounding terminal on the transformer enclosure (refer to 8.5.2 for more details on system grounding). The typical dry-type transformer enclosures are designed and listed for the connection of conduits and raceways only at designated points. These points are generally below a given location in the enclosure where the ambient temperature has been tested and shown not to rise above the listed temperature range.

8.4.1.4 Impedance considerations

Recommended practice is for low voltage dry-type isolation transformers to have an impedance (%Z) in the range of 3–5%, as calculated at the nominal line frequency. This impedance should not exceed 6% in any case. Installation of transformers with lower impedance help minimize voltage waveform distortion due to nonlinear electronic load equipment. A stiff source (low impedance value) is advantageous in cases where loads are being served with high peak-current demand and large crest factors, both of which are typical of single-phase 120 V electronic load equipment. A lower value impedance will minimize flat-topping of the ac voltage waveform, reduce the problem of harmonic voltage distortion, and improve voltage regulation of the transformer. Specifying a lower impedance will also result in larger available fault currents. Special precautions must be taken to assure that secondary overcurrent protective devices have adequate interrupting ratings. In addition, larger rms and peak currents of single-phase 120 V electronic load equipment should be expected.

 Copyright © 1999 IEEE. All rights reserved.

Copyright by the Institute Of Electrical & Electronics Engineers Inc
Fri Jul 20 10:38:07 2001

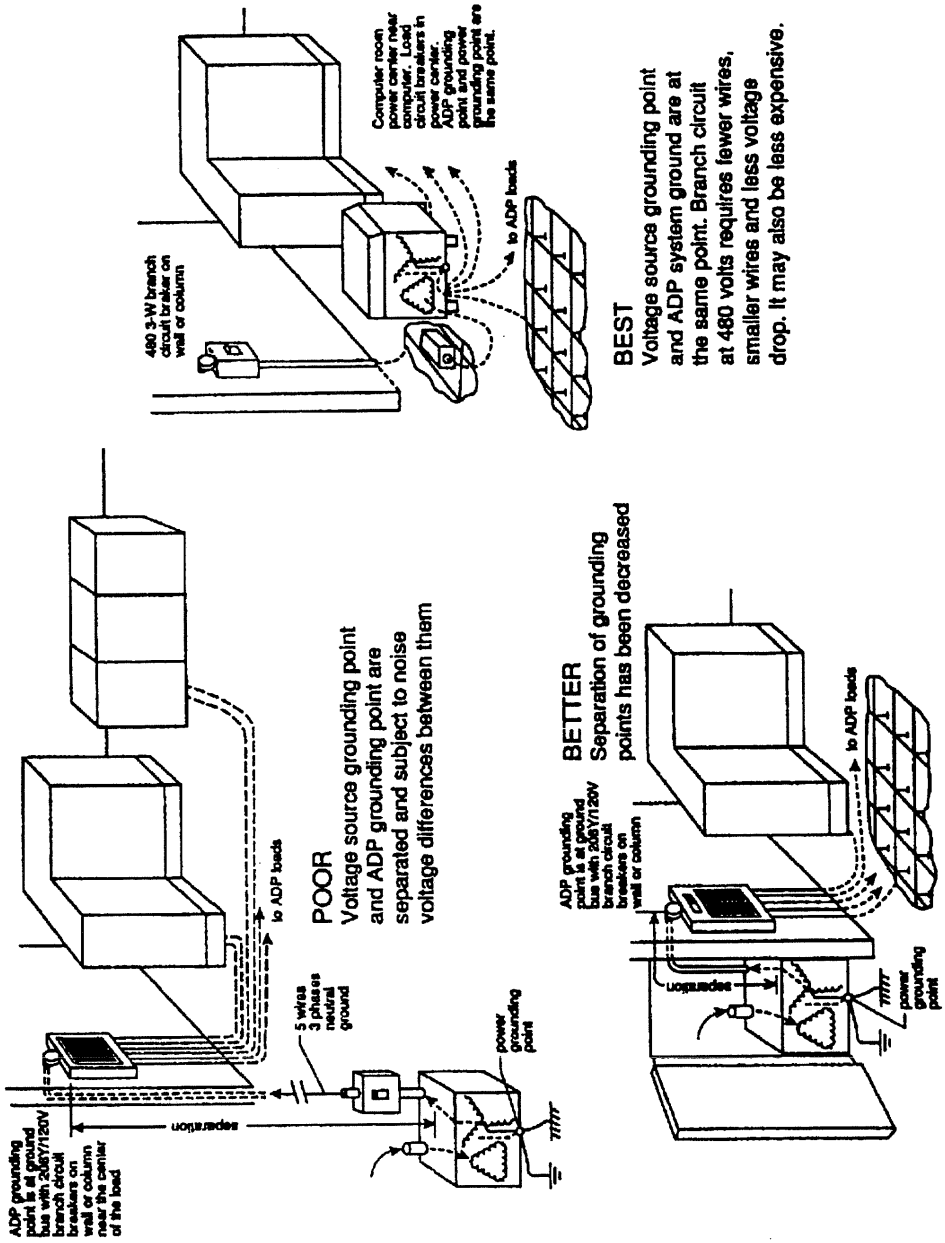

Source: Based on FIPS Pub 94-1983.

Figure 8-4—Best design locates shielded isolation transformer as close to electronic load equipment as possible

Copyright © 1999 IEEE. All rights reserved.

Copyright by the Institute Of Electrical & Electronics Engineers Inc
Fri Jul 20 10:38:08 2001

8.4.1.5 Electrostatic shield considerations

Recommended practice is to use transformers equipped with at least a single-layer electrostatic shield for the primary-secondary interwinding. The shield should be directly grounded or bonded to the transformer metal frame/enclosure using low-inductance means to ensure diversion of interwinding common-mode currents. A second insulated electrostatic shield is also useful. The second shield increases the common-mode attenuation and reduces the conversion of incoming common-mode voltages into normal-mode voltages on the output. Certain manufacturers provide transformers with the electrostatic shield bonded to the enclosure. Other manufacturers provide a terminal for the electrostatic shield that must be bonded to the enclosure at the time of installation.

8.4.1.6 Temperature sensor considerations

Some transformers may contain temperature sensors embedded in the windings. These sensors may be used to indicate excessive operating temperatures that may be caused by the nonlinear load currents. This feature can either sound an alarm or activate an overcurrent protective device or disconnect switch to de-energize the transformer before excessive damage is sustained. For increased transformer protection, recommended practice is to include temperature sensors in each of the three-phase windings.

8.4.1.7 K-factor rated transformers

UL and transformer manufacturers have established a K-factor rating for dry-type power transformers to indicate their suitability for supplying nonsinusoidal load currents. The K-factor relates a transformer's capability to serve varying degrees of nonlinear load without exceeding the rated temperature-rise limits. The K-factor is the ratio of stray losses in the transformer winding for a given nonsinusoidal load current to the stray losses in the transformer winding produced by a sinusoidal load current of the same magnitude. These transformers are typically specially designed to handle the increased heating effects and neutral currents produced by nonlinear electronic load equipment. The following are some of the design features:

a) The neutral bus is rated at 200% of the secondary full load ampere rating to accommodate the large neutral currents that principally result from triplen harmonics and phase imbalance. The transformer neutral bus rated at 200% is capable of accommodating oversized or multiple neutral conductors.

b) The winding conductors are specially configured and sized to minimize heating due to harmonic load currents. Special configurations and sizing such as multiple, parallel conductors can reduce the skin effect of the higher frequency harmonics and accommodate the balanced triplen harmonics that circulate in the transformer primary (delta) windings.

c) Cores are specially designed to maintain flux core density below saturation due to distorted voltage waveforms or high line voltage.

Standard K-factor ratings are 4, 9, 13, 20, 30, 40, and 50. The K-factor for a linear load is 1. For any given nonlinear load, if the harmonic current components are known, the K-factor

 Copyright © 1999 IEEE. All rights reserved.

Copyright by the Institute Of Electrical & Electronics Engineers Inc
Fri Jul 20 10:38:09 2001

Standard K-factor ratings are 4, 9, 13, 20, 30, 40, and 50. The K-factor for a linear load is 1. For any given nonlinear load, if the harmonic current components are known, the K-factor can be calculated and compared to the transformer's nameplate K-factor (refer to Chapter 4 for sample calculation of load K-factor). As long as the load K-factor is equal to or less than the rated K-factor of the transformer, the transformer is suitably rated and is considered safe to operate at rated load without overheating. Typical load K-factors for facilities containing large numbers of computers appear to range between 4 and 13. Measured K-factor on the secondary of step-down transformers that serve almost exclusively nonlinear loads, such as personal computers, have been observed to range as high as 20, but this is extremely rare. In most cases, a transformer with a K-factor rating of 13 can be sufficient to handle typical nonlinear electronic load equipment.

8.4.1.8 Derating conventional transformers

In the absence of recognized K-factor rated transformers, recommended practice is to derate conventional transformers in accordance with IEEE Std C57.110-1998. This standard presents two methods for derating a transformer on the basis of certain of its design characteristics and on the harmonic content of its load current. The first method is intended primarily for transformer design engineers and the second more commonly used method is based on information obtained from transformer certified test reports. Based on the transformer nameplate data (kVA rating, voltage rating, and primary and secondary full load ampere ratings), the certified test results data (primary and secondary winding resistances and load losses), and the harmonic profile of the load current, a derating calculation can be performed. This method requires a calculation of harmonic loss factor (also defined by UL as K-factor) from the harmonic profile of the load current. For transformers serving single-phase nonlinear electronic load equipment randomly distributed among the three phases with resultant large neutral currents, the neutral current should not exceed the ampacity limitations of the neutral terminal in the transformer or other neutral components in the power distribution system. Although a conventional transformer may be properly derated to avoid excessive winding heating associated with the harmonic currents, the neutral bus rating may be the limiting factor that determines the maximum load that the transformer can handle.

Another derating method sometimes suggested in the computer industry compares only the crest factor of the load current to the crest factor of a sinusoidal waveform. The transformer derating would then be equal to the sinusoidal crest factor divided by the actual or predicted crest factor of the load current. In the case of electronic load equipment with a high third harmonic content and corresponding large crest factor (such as switched mode power supplies), this method may provide reasonable results. However, this method should only be used for certain load types and may underestimate losses in the presence of harmonics of higher order. It does not take into consideration differences in the losses associated with the winding eddy-current losses in the transformer. This is an important issue because two waveforms of identical crest factor can have widely different effects on the winding eddy-current losses.

Figure 8-5 shows an example of a derating curve (appearing in Zavaldi et al. [B8][2]) obtained by more accurate computations based on IEEE Std C57.110-1998. This figure shows that the

[2]The numbers in brackets correspond to those of the bibliography in 8.9.

Copyright © 1999 IEEE. All rights reserved.

Copyright by the Institute Of Electrical & Electronics Engineers Inc
Fri Jul 20 10:38:10 2001

derating can reach 50% when the transformer supplies more than 70% of its load to single-phase power supplies of electronic load equipment. This example shows the importance of performing the calculations in accordance with IEEE Std C57.110-1998.

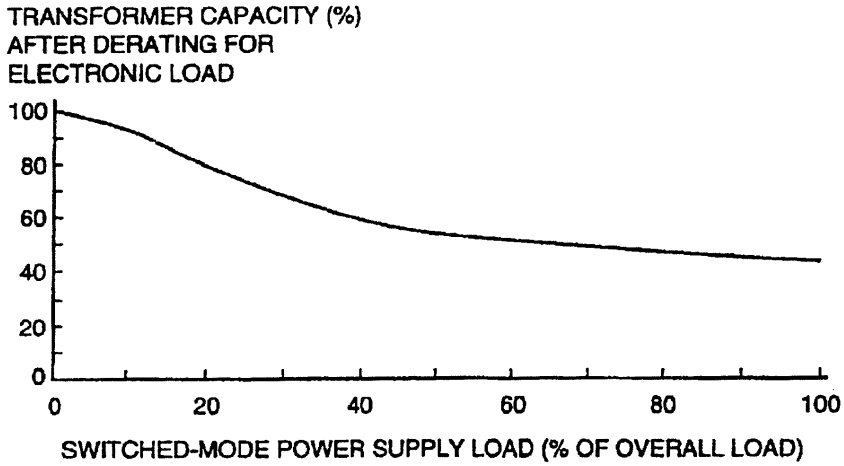

Source: Based on Zavadil [B8].

Figure 8-5—Transformer capability for supplying electronic load equipment

8.4.1.9 Conventional vs. K-factor rated transformers

Conventional transformers are designed to operate within a certain temperature range provided certain environmental and operating conditions are met. Additional losses are incurred when these transformers supply nonsinusoidal load currents with a total harmonic current distortion exceeding their design limit of 0.05 pu as described in IEEE Std C57.12.01-1998. The additional losses are primarily eddy-current losses in the windings which are proportional to the frequency squared. These losses result in an increased temperature in the transformer, which causes a reduction in life expectancy. In new installations, recommended practice is to specify K-factor rated transformers listed by a nationally recognized testing laboratory. In existing installations, recommended practice is to either derate the conventional transformers (refer to 8.4.1.8) or replace these transformers with K-factor rated transformers (refer to 8.4.1.7) where economically feasible.

A K-factor rated transformer is preferred over an oversized (derated) conventional transformer for several reasons. An oversized transformer may have higher short-circuit currents available thus necessitating secondary protective devices with higher interrupting ratings. In addition, oversized transformers have higher inrush currents associated with them, which may necessitate a corresponding increase in the size of the primary protective device serving the transformer to prevent nuisance tripping upon energizing the transformer. Increasing the primary protective devices may also necessitate an increase in the size of the primary conductors for protection purposes. These additional costs will probably outweigh any additional costs resulting from selecting a K-factor rated transformer over a conventional transformer (if any). In addition, K-factor rated transformers are equipped with 200% rated neutral buses to

Copyright © 1999 IEEE. All rights reserved.

Copyright by the Institute Of Electrical & Electronics Engineers Inc
Fri Jul 20 10:38:11 2001

accommodate the large neutral current resulting from certain types of single-phase nonlinear electronic load equipment. Also, it is not known how local jurisdictions will interpret the NEC regarding derating of conventional transformers as opposed to installing those properly listed to supply nonsinusoidal load currents. Furthermore, there is a concern about maintaining the required derating of conventional transformers over the lifetime of the site.

8.4.2 Switchboards and panelboards

Switchboards and panelboards that support electronic load equipment and related loads should be properly designed and installed. Recommended practice is to use panelboards specifically listed for nonlinear loads if they serve electronic load equipment. As a minimum, panelboards should be rated for power or lighting applications, and should not be a lighter-duty type. Special attention should be given to the location and installation methods used when installing panelboards. In addition, protective devices shall adequately protect system components, neutral buses should be sized to accommodate increased neutral currents due to harmonic currents from nonlinear electronic load equipment, and equipment ground buses should be sized to accommodate increased numbers of equipment grounding conductors due to the recommended practices of using insulated equipment grounding conductors and dedicated circuits for electronic load equipment. Surge protective devices may also be installed external to, or internal to, the switchboards or panelboards.

8.4.2.1 Location

Panelboards that serve electronic load equipment should be placed as near to the electronic load equipment as practicable, and should be bonded to the same ground reference as the electronic load equipment. Other panelboards located in the same area as the electronic load equipment that serve other loads such as lighting, heating, ventilation, air conditioning, and process cooling equipment should also be bonded to the same ground reference as the electronic load equipment. Panelboards should be directly mounted to any building steel member in the immediate area of the installation. Isolation of a panelboard from the metallic building structure by an electrically insulating material, as an attempt to prevent flow of high frequency current through the panelboard, is not recommended practice. The panelboard and metallic building structure, separated by a dielectric material, become capacitively coupled. The capacitive coupling presents a low impedance at high frequency defeating the original purpose. NFPA 780-1997 requires effective grounding and bonding between objects such as structural building steel and a panelboard located within side-flash distance (approximately 1.8 m (6 ft), horizontally) of each other. Insulation materials, commonly used in an attempt to separate a panelboard from building steel, are rarely capable of withstanding lightning-induced arcing conditions.

8.4.2.2 Overcurrent protective device considerations

The overcurrent protective devices located in switchboards and panelboards should respond properly to nonlinear load currents. Some overcurrent protective devices only interpret the proper rms value of the load current if it is purely sinusoidal. Others will respond to the true rms value regardless of load current waveform. Recommended practice is to use true rms

Copyright © 1999 IEEE. All rights reserved.

Copyright by the Institute Of Electrical & Electronics Engineers Inc
Fri Jul 20 10:38:12 2001

overcurrent protective devices. Refer to 8.4.3 and 8.4.4 for further guidance on selecting circuit breakers and fuses, respectively.

Fuses and circuit breakers generally do not prevent all types of single-phasing conditions. Therefore, electronic phase-failure or voltage-unbalance relays may be required in addition to fuses or circuit breakers. Most three-phase electronic load equipment cannot tolerate the application of single-phase power to its input. The resulting downtime and equipment damage can be extensive. If external relaying is required, circuit breakers and fused switches must be selected with shunt trip devices. All overcurrent protective device conductors should be properly shaped, routed, and installed in a workmanlike manner, especially at the point of termination to the protective device. With proper spacing, future measurements of load currents are more easily accessed using typical current probes or current transformers.

8.4.2.3 Neutral bus considerations

Neutral buses should be capable of handling increased neutral currents that may result from downstream nonlinear electronic load equipment. Neutral buses in switchboards are sometimes rated less than the phase buses due to normally anticipated diversity factors. Ratings in the 80% range are not uncommon, although ratings as low as 50% may be seen. This is typically not a problem when the switchboard serves line-to-line connected loads or nonlinear loads via a delta-wye connected isolation transformer. However, such derating can be a problem if the switchboard directly serves single-phase, line-to-neutral connected nonlinear electronic load equipment. Neutral buses in conventional panelboards are rated at 100% of the main bus rating.

It is recommended practice that oversized neutral buses be provided in switchboards that directly serve nonlinear electronic load equipment. Neutral buses may be specified by the switchboard OEM with an oversized ampacity rating without affecting the product safety listing. This approach allows a 200% rated neutral bus to be placed into any standard switchboard so as to allow for the expected larger neutral currents without specifying a switchboard with an oversized main bus rating. This approach is recommended practice where high magnitudes of neutral current is anticipated.

It is recommended practice that oversized neutral buses be provided in panelboards that directly serve nonlinear electronic load equipment. As a minimum, the neutral bus should be rated at 1.73 times the main bus phase current rating. Most equipment manufacturers provide specific panelboards that are listed by a nationally recognized testing laboratory and labeled for nonlinear loads. These panelboards contain a neutral bus rated at 200% of the panelboard main bus current rating. In addition, these neutral bus assemblies can accommodate oversized neutral conductors or double neutral conductors (refer to 8.4.5 for more details on conductor sizing). For example, a typical 225 A panelboard rated for nonlinear loads may have a neutral bus rating of 450 A, and the neutral bus may be capable of accommodating one 250 mm^2 oversized neutral conductor or two paralleled 125 mm^2 neutral conductors. The actual wire range for these lugs will vary between manufacturers and should be verified prior to ordering equipment and/or specifying conductor sizes. Since it is recommended practice to serve single-phase electronic load equipment with individual, dedicated circuits, individual termination points should be available on the neutral bus for each possible load. The neutral bus

Copyright © 1999 IEEE. All rights reserved.

Copyright by the Institute Of Electrical & Electronics Engineers Inc
Fri Jul 20 10:38:13 2001

should be insulated from the panelboard enclosure unless the connections are appropriate (such as service entrance applications).

8.4.2.4 Equipment grounding bus considerations

The need for a bus to terminate all equipment grounding conductors is well established, as almost every circuit that supports electronic load equipment should require an equipment grounding conductor. Termination of these equipment grounding conductors without a proper bus degrades the reliability of the grounding path, especially for higher frequency currents.

It is recommended practice that switchboards be equipped with an equipment ground bus. It is also important that all conductor connections to the bus be made using suitable hardware such as listed lugs, bolts, flat washers, locking washers, and nuts. Bolts with slotted heads should be avoided due to the difficulty in torquing these connections. In some cases, a second equipment ground bus for the termination of additional equipment grounding conductors from isolated grounding receptacle circuits may be necessary.

Depending on the installation requirements, panelboards should be ordered as a listed product with the equipment grounding conductor bus properly bolted or bonded to the panelboard enclosure. An isolated equipment grounding conductor bus intentionally insulated from the panelboard enclosure, may also be required (refer to 8.5.3.2 for more details on the isolated ground system configuration). It is not recommended to terminate equipment grounding conductors to the panelboard via lugs bolted to the enclosure. Termination of equipment grounding conductors to the panelboard by using panelboard support hardware is not recommended.

8.4.2.5 Surge protective device considerations

Recommended practice is that surge protective devices be applied to service entrance electrical switchboards and panelboards, and panelboards located on the secondary of separately-derived systems that support information technology equipment, telephone, telecommunications, signaling, television, or other form of electronic load equipment (refer to 8.6 for further details). These devices may be installed externally or internally to the switchboard or panelboard. Panelboards are available that contain integrally mounted surge protective devices that minimize the length of the surge protective device conductors, thus optimizing the effectiveness of the device.

8.4.3 Circuit breaker considerations

Recommended practice is to use circuit breakers that respond to the true rms value of load current when supplying nonlinear loads. Interrupting ratings of new and existing circuit breakers (particularly those fed from K-rated transformers with low impedances) should be evaluated for proper application. Proper application of circuit breakers require that the time-current curves be coordinated and matched to the load characteristics.

Copyright © 1999 IEEE. All rights reserved.

Copyright by the Institute Of Electrical & Electronics Engineers Inc
Fri Jul 20 10:38:14 2001

8.4.3.1 Trip unit considerations

Circuit breakers used to serve electronic equipment can typically be specified with two different types of trip units:

— Thermal-magnetic trip unit; and

— Electronic trip unit (true-RMS and peak sensing).

Selection of the proper trip device depends on load current waveform characteristics as well as other load, operational, and environmental issues.

8.4.3.1.1 Thermal-magnetic trip units

Circuit breakers equipped with thermal-magnetic trip units will properly respond to the true rms heating effects of nonlinear load currents. The bimetal thermal element responds directly to rms current regardless of the harmonic profile of the load current.

8.4.3.1.2 Electronic trip units

Circuit breakers equipped with true rms sensing electronic trip units will also properly respond to the true rms heating effects of nonlinear load currents, regardless of the harmonic profile. These trip units sample the current waveform at various times each cycle and compute the true rms equivalent current. The number of samples taken per cycle will vary from different manufacturers. Some of these trip units also contain a memory circuit that monitors items such as preloading conditions. These units may be preferable over thermal-magnetic units for the following reasons:

— More accurate and greater flexibility in setting trip points and achieving selectivity;

— Ability to easily modify continuous current rating by replacement of rating plug;

— Not sensitive to ambient temperature;

— Available integral ground fault protection; and

— Available system monitoring functions.

Circuit breakers equipped with peak-sensing electronic trip units will correctly interpret the rms value of the current only if the waveform is purely sinusoidal. Peak-sensing trip devices are not recommended to serve nonlinear electronic load equipment. Loads that produce distorted (nonsinusoidal) waveforms may either cause nuisance tripping of circuit breakers or prevent tripping of circuit breakers depending on the load waveform. Certain nonlinear loads such as switched mode power supplies located in most electronic equipment have characteristics of very high crest factors. Crest factors of 2.5 or greater are typically measured on this type of equipment. Circuit breakers with electronic trip devices that respond to the peak value of the current waveform may falsely trip under these circumstances at currents below the continuous current rating of the circuit breaker.

Copyright © 1999 IEEE. All rights reserved.

Copyright by the Institute Of Electrical & Electronics Engineers Inc
Fri Jul 20 10:38:15 2001

8.4.3.2 Interrupting ratings

Interrupting ratings of new circuit breakers or existing circuit breakers (particularly those fed from new K-factor rated transformers or conventional transformers with low impedances) should be evaluated to determine if proper interrupting ratings are applied. Interrupting ratings need to be reevaluated if there are any changes to the power system, such as installing K-factor transformers. These transformers are typically specified or manufactured with a lower impedance (%Z) resulting in a higher available short-circuit current at the system components located on the secondary.

8.4.4 Fuses

Fuses are true rms sensing overcurrent protective devices and respond properly to the true rms heating effects of nonlinear load currents. Proper application of fuses require that the time-current curves be coordinated and matched to the load characteristics, and that manufacturers' fuse selectivity ratio tables be utilized. Where significant inrushes are expected, time-delay devices are recommended.

8.4.4.1 Safety Switches

Fuses are typically installed in safety switches. Separately mounted fused safety switches are typically categorized as general-duty and heavy-duty types. The general-duty type safety switch is rated at 240 V maximum and is typically used in residential and light commercial and industrial applications. The heavy-duty type safety switch is rated at 600 V maximum and is typically used in commercial and industrial applications.

Safety switches can typically be ordered with neutral assemblies and equipment grounding assemblies. There is currently no listing for safety switches that are to be used specifically with nonlinear loads. It is recommended that the manufacturer be contacted to determine if oversized neutral assemblies can be installed in safety switches serving nonlinear electronic load equipment without voiding any listing requirements. In addition, the manufacturer should be contacted to determine if an isolated equipment grounding bus can be installed in the safety switch enclosure for those applications that require this grounding configuration.

Whenever fuses are utilized, there is a risk of a single-phasing condition if one fuse on a three phase system blows. Safety switches are generally not stored energy devices, and may not contain auxiliary functions such as undervoltage release or shunt trip attachments that help protect against a single-phasing condition. This is an important consideration because some three-phase electronic load equipment may be susceptible to damage if a single-phase condition persists. Other devices may need to be installed to provide proper single-phasing protection.

8.4.4.2 Blown fuse indicators

Recommended practice is to use blown fuse indicators for the quick and safe determination of the source of power outage affecting downstream electronic load equipment. Some safety switches and fused circuit breakers contain indicating devices located on the front enclosure that indicate a blown fuse condition. Some fuses contain an indicator light, providing visual indication that a fuse is blown.

Copyright © 1999 IEEE. All rights reserved.

Copyright by the Institute Of Electrical & Electronics Engineers Inc
Fri Jul 20 10:38:16 2001

8.4.4.3 Interrupting ratings

Interrupting ratings of new fuses or existing fuses should be evaluated to determine if proper interrupting ratings are applied. Interrupting ratings need to be reevaluated if there are any changes to the power system, such as installing K-factor transformers. These transformers are typically specified or manufactured with a low impedance (%Z) resulting in a higher available short-circuit current on the secondary. This condition can be a problem especially where low interrupting capacity fuses, such as Class H fuses, are installed (Class H fuses have an interrupting rating of only 10 000 A).

8.4.5 Conductors

Typical electronic load equipment characteristics are categorized as continuous, nonlinear, and automatic voltage regulating. Therefore, phase and neutral conductors serving these loads should be properly sized to account for the increased heating due to harmonic currents, any phase imbalance and triplen harmonic currents flowing on the neutral conductor, and the higher associated phase currents due to inverse voltage-current load characteristics. Recommended practice is to install dedicated branch circuits for electronic load equipment. The dedicated circuit should be run in grounded metallic conduit or raceway, using an insulated equipment grounding conductor. Splices should be avoided where practicable.

8.4.5.1 Phase conductors

In a three-phase, four-wire system supplying single-phase nonlinear electronic load, the neutral conductor is typically considered a current-carrying conductor. In these situations, the NEC requires that the ampacity of the circuit conductors be properly adjusted to account for the combined mutual heating effects of the phase and neutral conductors. This additional heat is typically generated from two sources. The first source of additional heating is principally due to skin effect and proximity effect, which results in the effective ac resistance of conductors to increase as the frequency increases. In other words, as the frequency increases, the current at those higher frequencies tend to flow only on the outer surface of the conductor, which results in a higher apparent resistance, which in turn results in additional heating due to I^2R losses. This typically is not a major problem because as the harmonic frequency increases, the magnitude of the harmonic currents decrease. The second source of additional heating is principally due to triplen harmonic currents flowing in the neutral conductors of three-phase, four-wire circuits serving single-phase nonlinear electronic load equipment. The resulting neutral current can be greater than the phase currents.

For example, consider a three-phase, four-wire circuit containing four #2 AWG type TW copper conductors that serves a panelboard serving linear loads. The ampacity of the circuit conductors is 95 A (based on no more than three current-carrying conductors in the raceway) and the overcurrent protective device for this circuit may be rated at 100 A (which is the next highest standard overcurrent protective device rating). If this same panelboard serves single-phase nonlinear electronic load equipment, the three-phase, four-wire circuit conductor ampacities must be adjusted to 80%, per the NEC, to account for the triplen harmonic currents flowing on the neutral conductor. Due to four current-carrying conductors in the raceway, the ampacity of the circuit conductors must be adjusted to 76 A (95 × 0.8), and the

Copyright © 1999 IEEE. All rights reserved.

Copyright by the Institute Of Electrical & Electronics Engineers Inc
Fri Jul 20 10:38:17 2001

corresponding overcurrent protective device shall be rated at a maximum of 80 A. Failure to properly limit current will cause heating that may damage conductor insulation. This situation can compromise the proper operation of the overcurrent protective device. The design engineer should assure that all electrical equipment selected and associated terminals and lugs are able to accommodate the larger phase conductors. In addition, neutral conductors sized equally to the phase conductors may not be capable of handling the expected increased currents due to the nonlinear electronic load equipment. It is recommended practice to oversize the neutral conductors in these situations as described in 8.4.5.2.

8.4.5.2 Neutral conductors

Neutral conductors in three-phase, four-wire systems serving panelboards supplying single-phase nonlinear electronic load equipment should be properly sized to handle the increased currents associated with the triplen harmonics and phase imbalance. These increased currents cause additional heating due to the proximity heating effects and the increased losses of the neutral conductor. Recommended practice is to oversize the neutral conductor to a minimum of one trade size larger than the phase conductor ampacity or use two neutral conductors sized the same as the phase conductor. If two neutral conductors are run in parallel, the size of the individual neutral conductors must be at least #2 AWG per the NEC. The design engineer should assure that all electrical equipment selected and associated terminals and lugs are able to accommodate the oversized neutral conductors.

8.4.5.3 Equipment grounding conductors

Recommended practice is to install insulated equipment grounding conductors with each circuit serving electronic load equipment. The use of uninsulated (bare) wire for the equipment grounding conductor within a conduit or raceway is not recommended. The use of uninsulated (bare) conductors is not recommended in any manner except when used for short grounding jumpers, bonding jumpers, and similar items that are not enclosed in conduit or raceway.

8.4.6 Busways

Recommended practice is to use a fully enclosed, dedicated busway (without taps). This design avoids problems resulting from multiple loads being connected along the length of the same feeder. Such connected loads may interact with one another via the commonly shared wiring impedances. If a nondedicated busway is used, then a separately derived source, such as an isolation transformer or other power conditioner, should be installed at each tap that serves electronic load equipment.

The physical geometry of the phase and neutral busbars in the busway should be configured by the OEM to provide minimum reactance, and to minimize the zero-sequence magnetic field surrounding the busway. An internal equipment grounding conductor bus is recommended over using the metal enclosure of the busway. The internal equipment grounding bus should be properly connected to the metal enclosure.

Copyright © 1999 IEEE. All rights reserved.

Copyright by the Institute Of Electrical & Electronics Engineers Inc
Fri Jul 20 10:38:18 2001

8.4.7 Wiring devices

Branch circuit outlet wiring devices that are required to be used with individual units of electronic load equipment are identified by the OEM of electronic load equipment. They are generally specified on the associated installation data sheets provided by the manufacturer. Several standards (NEMA, IEC, etc.) exist for which electrical connectors are configured and where connectors meeting the same general interchangeable configuration (e.g., voltage/ampacity rating, size, keying, and face pattern) are made by more than one OEM. In these cases, all are basically interchangeable even though mechanical construction and materials may differ significantly among the devices. Circuits using connectors and operating at frequencies other than 60 Hz (U.S. standard) should not use connectors that are interchangeable with 60 Hz versions. Recommended practice is to use special keying for dealing with this problem, as opposed to simply using a different configuration that may be considered unique at the given location. Such uniqueness often is not maintained over the lifetime of the site. Wiring devices shall be utilized for their intended purpose. Improper installation and assembly techniques of these devices can compromise equipment safety and performance.

8.4.7.1 Single-phase receptacles

Improper terminations of conductors to wiring devices are a major source of problems due to either careless assembly, improper assembly techniques, or a combination of these factors. Unforeseen design and installation problems may create incompatibility between a conductor and its associated connector wiring terminal.

Most wiring termination problems can be controlled if the conductor and connector terminals are determined to be compatible with one another with regard to wire size range and aluminum/copper compatibility. Recommended practice is for all wiring terminations to receptacles to only use the screw-compression wiring contacts to ensure a reliable, low resistance connection. Push-in wiring contacts that are found on common receptacles should not be used.

The receptacle and plug (cap) connected to an equipment grounding conductor should have a dedicated and keyed pin reserved (not field assigned) for the equipment grounding conductor. For neutral connections, receptacles and plugs should be designed and configured by the OEM for the purposes of connecting to a neutral conductor.

8.4.7.2 Three-phase receptacles

Wye-connected three-phase connectors supplied as part of a listed product to be connected to a branch circuit, should not require a larger sized neutral conductor be connected in order to accommodate increased neutral triplen currents. This is because the nationally recognized testing laboratory providing the listing on the associated product should have evaluated the connector to ensure its suitability in the application. A wire size no larger than the largest one that the branch circuit's receptacle is listed to accept, should be suitable. Verification of the typical connector and neutral current in these cases is recommended to avoid contact/connection overheating. The receptacle and plug (cap) connected to an equipment grounding conductor should have a dedicated and keyed pin reserved (not field assigned) for the equipment grounding conductor. For neutral connections, receptacles and plugs should be designed and configured by the OEM for the purposes of connecting to a neutral conductor.

Copyright © 1999 IEEE. All rights reserved.

Copyright by the Institute Of Electrical & Electronics Engineers Inc
Fri Jul 20 10:38:19 2001

8.4.8 Raceways

Recommended practice is for all feeder and branch circuit conductors serving electronic load equipment to be fully enclosed by grounded metal conduit or raceway. Each branch circuit comprised of individual and dedicated phase, neutral, and equipment grounding conductors should be in separate conduits. Metal-enclosed wireway also may be judiciously used, but such use compromises the recommended concept of keeping individual circuits separately shielded to reduce coupling of electrical noise between circuits. In addition, all signal conductors should be fully enclosed by grounded metal conduit or wireway. This is extremely important when the signal conductors are in the same vicinity as power conductors. Signal conductors should not be installed in the same raceway or conduit as power conductors. Conduits should be continuous and should be connected to building steel at multiple and random points along their length. Properly installed coupling methods between sections of conduits reduces voltage drops from ground currents. It is imperative that the surface of the enclosures be properly prepared to assure that the conduit and coupling makes proper contact with the enclosure. For best results, bonding-type locknuts and grounding-type bushings are recommended to ensure the continuity and grounding integrity between the fitting and the equipment enclosure. Refer to 8.4.8.5 for details on conduit fittings. Insulated throat bushings are recommended at each termination to provide physical protection for the circuit conductors.

Bonding jumpers should be placed across expansion joints under all conditions. Use of ferrous metal conduit is recommended (for enhanced shielding purposes) over nonferrous conduits in all cases except for 415 Hz ac power circuits. Circuit conductors for 400 Hz applications are best routed in nonferrous metal conduit to minimize the voltage drop associated with higher losses of ferrous conduits at higher frequencies. Nonmetallic conduits and raceways do not provide shielding properties and are not a recommended practice. When wireways are used for transporting a large number of branch circuits from the panelboard to the load equipment, it is important that the individual phase, neutral and grounding conductors be arranged and tightly bundled together to minimize induced currents in the enclosing raceway and to minimize susceptibility to disturbances associated with other circuits. The following is a list of recommended conduit materials for most premises wiring purposes in descending order of cost, conductivity, and shielding effectiveness:

a) Rigid metal conduit;
b) Intermediate metal conduit;
c) Electrical metallic tubing;
d) Flexible metal conduit.

8.4.8.1 Rigid metal and intermediate metal conduit

Rigid metal conduit is the best method to route circuit conductors due to its superior shielding and grounding characteristics, and mechanical strength. Equipment and installation costs make rigid metal conduit more expensive to install than the generally less expensive, lighter and easier to install intermediate metal conduit. Sections of these conduits are joined together by threaded metal couplings that ensure shielding and grounding integrity, provided that they are made up tight at the time of installation. Recommended practice is to use double locknuts for connections to enclosures.

Copyright © 1999 IEEE. All rights reserved.

Copyright by the Institute Of Electrical & Electronics Engineers Inc
Fri Jul 20 10:38:20 2001

8.4.8.2 Electrical metallic tubing

The typical site performs well with properly designed, installed, and maintained electrical metallic tubing. It is typically used where it is not subject to severe physical damage. Caution should be exercised when selecting this type of conduit. Field experience indicates fittings and couplings are often installed incorrectly or loosen over time. Electrical metallic tubing has a thinner wall than rigid or intermediate metal conduit and is less expensive, lighter, and easier to install. Due to its thin wall, electrical metallic tubing cannot be threaded and other means must be used to join sections. Sections of this conduit are typically joined by means of setscrew or compression-type connectors, which do not provide the same magnitude of grounding integrity as the threaded connections. Accordingly, the shielding and grounding effectiveness is reduced. Recommended practice is to join sections of electrical metallic tubing with compression-type couplings. Set-screw-type couplings should be avoided. Connections to enclosures should be made up tight using compression-type connectors.

8.4.8.3 Flexible metal conduit

Flexible metal conduit does not possess the grounding and shielding effectiveness as the conduit types above. When flexible metal conduit is used, an equipment grounding conductor shall be installed. Sometimes flexible metal conduit is used for applications to minimize vibrations in transformer installations or to provide flexibility for connected equipment such as power distribution units. Flexible metal conduit cannot act as the sole grounding means except under very limited conditions outlined in the NEC. Where short sections of flexible metal conduit are used between a transformer and metal conduit or raceway, they should be bonded together using a low-inductance bonding means (since they are shields and may carry higher frequency currents).

In all cases where a liquid-tight form of termination is employed between a conduit and an equipment enclosure, the associated listed sealing ring or gland assembly should be used to interface the fitting to the enclosure. In some cases, this ring or gland is not only the sealing method but is also an integral part of the grounding path.

8.4.8.4 Conduit supports

Galvanized metal framing channel is generally recommended to mechanically support and to secure items in place, as well as to ground and bond items such as piping and conduit. Due to its geometry, this material makes a low-inductance grounding bus for the interconnection of pipes and conduits to one another and to building steel, or other equipment that may be bonded together. If installed properly, this channel also makes an effective higher frequency grounding bus for the connection of all associated equipment. Metal framing channel and its associated clamping hardware is generally an effective conductor for frequencies up to tens of megahertz. Wire-conductors used to connect the channel to other items may create a higher inductance connection. Therefore, the channel is best used by itself as a bus directly mounted to building steel or other grounding media.

 Copyright © 1999 IEEE. All rights reserved.

Copyright by the Institute Of Electrical & Electronics Engineers Inc
Fri Jul 20 10:38:22 2001

8.4.8.5 Conduit fittings

The integrity and effectiveness of all metal conduit is significantly improved if certain fittings such as grounding-type bushings, bonding-type locknuts, and grounding wedges are used. Recommended practice for new installations is to install grounding-type bushings and bonding locknuts. Metal grounding-type bushings should be installed on conduits that terminate in all switchboards, panelboards, transformers, pull boxes and junction boxes, and other metal enclosures. A grounding-type bushing is installed on the ends of conduit and contains a lug for connecting a bonding jumper from the conduit bushing to the equipment ground bus. This bonding jumper supplements the existing mechanical connection using locknuts and therefore improves the grounding integrity of the installation. For higher frequency currents, this bonding jumper should be a low-inductance type jumper such as braided copper wire. The grounding-type bushing is extremely important where an end-terminating fitting makes a mechanical connection to an equipment enclosure via a concentric knockout. Concentric ring tabs are not a reliable means of providing a good grounding or bonding path for higher frequency currents and fault currents. The bonding jumper should be terminated directly to the equipment ground bus in the equipment. If an equipment ground bus is not available, the bonding jumper should be terminated directly to the metal enclosure using a properly prepared grounding surface and lug.

Where more than one bonding bushing is required to be bonded to an equipment ground bus in a box or other enclosure, the use of a single bonding jumper for all of the bushings may reduce the effectiveness of the grounding path for high frequencies. Where practicable, a dedicated bonding jumper should be used for each grounding-type bushing to the equipment grounding bus.

Grounding-type bushings are also extremely important in applications where conduits are terminated to equipment with knockout openings too large for the intended conduit. The use of reducing washers on circuits serving electronic load equipment applications is not recommended. Such an installation does not provide effective grounding at higher frequencies. This problem is compounded when the washer-set is applied over a painted or nonconductive metal surface. If a fitting or reducing washer is used, a bonding jumper should be connected to the equipment ground bus.

Bonding-type locknuts contain a set-screw on the locknut to assure that the connection of the conduit to the equipment enclosure does not loosen over time from vibration or other causes. These locknuts do not provide sufficient bonding when used on concentric or eccentric rings located on the equipment enclosure.

Grounding-type wedges are useful in existing installations where the use of bonding-type locknuts or grounding-type bushings might not be economically feasible. These horseshoe-type wedges may be installed on existing equipment to effectively bond the conduit to the equipment enclosure without disconnecting the circuit conductors. These wedges are typically installed between the conduit bushing and the equipment enclosure and contain a terminal for installing a bonding jumper between the wedge and the equipment grounding terminal.

Copyright © 1999 IEEE. All rights reserved.

Copyright by the Institute Of Electrical & Electronics Engineers Inc
Fri Jul 20 10:38:22 2001

8.4.9 Pull boxes and junction boxes

All pull and junction boxes should be metal if the associated conduit and raceway system are metallic. Boxes equipped with concentric/eccentric knockout forms for conduit connections should have grounding bushings installed.

8.4.10 Power enhancement devices

The selection of power enhancement devices depends on many factors including the types of power disturbance occurrences, the susceptibility of connected electronic load equipment to various power line disturbances, and the costs associated with the various power enhancement devices. Guidelines on measuring and quantifying the types of power disturbances are outlined in Chapter 6. Guidelines on the susceptibility of certain load equipment to steady-state and transient conditions are outlined in Chapter 3. The cost justification of purchasing one power enhancement device over another is dependent on the costs incurred when data is lost, components damaged, or processes shut down due to power anomalies. Chapter 8 discusses the capabilities of various commercially available power enhancement devices.

The power distribution unit (PDU) or computer power center (CPC) is recommended as the principal means of supplying the power and grounding interface between the premises wiring system and the connected electronic load equipment, such as information technology equipment. The power distribution unit is generally a superior interface method to almost all available building wiring techniques. Recommended practice is to install these units as near as practicable to the electronic load equipment. However, they can be installed anywhere in the premises wiring. A listed power distribution unit is essentially a prefabricated ac power and grounding system that includes flexible output cables or integrally mounted branch circuit panelboards to serve in place of the premises branch circuit system. Power distribution units may contain an electrostatically shielded isolation transformer, surge protective devices, an automatic line voltage regulating transformer, motor-generator set, and even full uninterruptible power supply capability, or any combination of these devices. Some power distribution units may contain bypass and internal transfer switch arrangements, means for reducing the effects of harmonic currents, and means for improving power factor. Other forms of power distribution units used for special applications may be constructed without an internal means of isolation or transformation. Such units should be used with externally provided power enhancement devices that are a part of the premises wiring system, and located on and bonded to the same ground reference as the power distribution units.

When the nominal supply voltage is not stable, a carefully chosen power conditioning device with automatic line voltage regulation can provide the necessary voltage correction. Recommended practice is to place the device near the served electronic load equipment and bond it to the same ground reference as the electronic load equipment. The device should be configured as a separately derived system.

8.4.11 Metal-clad cable

Metal-clad cable is an assembly of two or more insulated circuit conductors with one or more equipment grounding conductors enclosed in a metallic sheath. The metallic sheath may be of

Copyright © 1999 IEEE. All rights reserved.

Copyright by the Institute Of Electrical & Electronics Engineers Inc
Fri Jul 20 10:38:25 2001

interlocked armor tape construction or a continuous smooth or corrugated construction. The NEC allows metal-clad cables to be used for a large variety of equipment and occupancies, including under raised floors of computer rooms constructed according to Article 645. The major restriction placed on metal-clad cable is that it cannot be installed where subject to physical damage.

Two features of metal-clad cable can be advantageous for use in feeder and branch circuits for electronic load equipment. The construction of metal-clad cable causes all circuit conductors to be tightly bundled together. The tight bundling reduces the intensity of the magnetic field near the cable as compared to single conductors in conduit that are not so tightly bundled. The tight bundling also reduces the self inductance of the cable run, leading to a lower voltage drop. The metallic cable sheath provides a low-impedance, high-frequency bonding path plus electrostatic and electromagnetic shielding between the enclosed circuit conductors and other nearby conductors.

Copper circuit and equipment grounding conductors are recommended over aluminum. On an equal ampacity basis, the copper conductors have a smaller diameter resulting in a smaller center-to-center distance between conductors. Minimizing the conductors' center-to-center distance decreases the intensity of the close proximity magnetic field. The continuous style cable sheath is recommended over the interlocked armor-type style, since the continuous sheath provides a lower impedance path and is a more effective shield. Aluminum sheathed cable results in a lower inductance cable as opposed to a galvanized steel sheathed cable and provides better electrostatic shielding, but does not provide better electromagnetic shielding than galvanized steel sheathed cable.

Terminating connectors for metal-clad cable are primarily designed for their fault-current-carrying capabilities at the fundamental power source frequency, and are not necessarily designed for high-frequency bonding. Set-screw-type metal-clad cable connectors are not recommended. Metal-clad cable connectors should be of the compression type with consideration given to providing the greatest surface area contact between the metallic portion of the connector and the cable sheath.

In areas where both metal-clad cable and conduit are permitted, metal-clad cable offers the following advantages:

a) The metal-clad cable installation is usually less expensive than conduit.

b) Continuity of the metal-clad cable sheath is virtually assured because of the manner in which the cable is constructed. Continuity of the conduit system may be questionable, primarily due to the human factor involved in the quality of coupled joints and the tendency of conduit threads to corrode over time.

c) Metal-clad cable circuit conductors are tightly bundled together as part of the cable's standard construction. Tight bundling of circuit conductors inside a conduit is typically not standard, but is possible if prelashed or multiconductor cable assemblies are used.

Copyright © 1999 IEEE. All rights reserved.

Copyright by the Institute Of Electrical & Electronics Engineers Inc
Fri Jul 20 10:38:27 2001

8.4.12 Cable tray systems

Cable tray is frequently used as part of the interconnecting wiring system where a large number of interconnecting cables are required. Cable tray is an economical alternative to raceways, such as conduit, where cable density is sufficiently high. Cable tray also provides flexibility for future additions and modifications. Cable tray is not considered a raceway by the NEC, but rather serves as a cable support system.

The most common materials used for cable tray are galvanized steel and aluminum. Other materials such as stainless steel and fiberglass are available for use in corrosive areas. Galvanized steel and aluminum are recommended for use with electronic load equipment. If corrosion resistance is required in conjunction with electronic load equipment, then it is recommended that a corrosion-resistant coating be applied over galvanized steel or aluminum. From a shielding standpoint, both galvanized steel and aluminum solid-bottom cable trays with covers provide a high degree of electrostatic shielding over a wide frequency range. Galvanized steel cable tray provides better electromagnetic shielding at low frequencies, while aluminum cable tray provides better high-frequency electrostatic shielding (see Scheide [B7]).

Cable tray systems may consist of only two levels for simple systems and eight or more levels for large, complex systems. IEEE Std 518-1982 provides recommendations for grouping circuits into levels and spacing requirements between levels. The recommendations in this standard are based on using solid bottom cable tray with covers for sensitive control circuits and ladder-type cable for power circuits and less sensitive control circuits. Where power cables carry high-frequency current, such as cables connecting fast rise time PWM inverter drives to ac motors, it is advisable to use solid-bottom cable tray with covers for these cables to provide additional shielding. Solid-bottom cable tray provides more surface area than ladder cable tray and thus provides a lower impedance signal reference structure between widely separated areas. Solid-bottom cable tray should be the flat bottom type, as opposed to the corrugated bottom type, to provide the minimum distance between the contained cables and the signal reference structure (SRS) surface. The NEC has different maximum fill requirement for ladder and solid-bottom cable tray and additional cable ampacity derating is required when covers are used.

Metallic cable trays can serve as part of the signal reference structure if a few basic principles are followed for its installation. To provide a low impedance path over a wide frequency range, a large number of short-length, parallel paths of large surface area is desired. Bonding jumpers may be required or recommended at various points along the cable tray run.

Where bonding jumpers are specified, they should be as short as possible and be good high-frequency conductors. Where bonding jumpers are used to join two cable tray sections in the same run, two jumpers should be used, one on each side rail. Ideally, the cable tray system should form an unbroken, continuous path. If site conditions require that the continuous path be broken, then bonding jumpers are required to join the discontinuous sections. Cable tray fittings should be used rather than adjustable splice plates to change elevation in horizontal runs. If adjustable splice plates are used, then bonding jumpers should be installed across the joint. Bonding jumpers are also required across expansion joints. Under certain conditions,

Copyright © 1999 IEEE. All rights reserved.

Copyright by the Institute Of Electrical & Electronics Engineers Inc
Fri Jul 20 10:38:28 2001

cable tray can serve as an equipment grounding conductor. It is recommended that a supplemental equipment grounding conductor be used, even of the cable tray qualifies for use as an equipment grounding conductor.

Cable tray is often used in tunnels between buildings and for connecting noncontiguous areas within the same building. For new construction, it is recommended that such tunnels be fabricated using corrugated galvanized steel culvert stock, which is available in many sizes and shapes. Metal framing channel can be attached to the culvert stock to support the cable tray. The culvert stock should be bonded to building structural steel at its endpoints and where feasible at intermediate points. This type of construction is not only cost effective, but also provides a good SRS.

Metallic conduit is often used with cable tray. Where solid-bottom cable tray with covers is used, the conduits should be terminated to the cable tray side rails using locknuts on each side and a bushing on the threads. This type of termination not only provides effective bonding, but also allows easy installation and removal of covers. Care should be taken in determining the size and placement of knockouts so as not to weaken the side rails structurally. The preferred method of connecting conduit to ladder cable tray is to use a conduit to cable tray clamp listed or approved for this purpose. Where a large bank of conduits terminates to a cable tray system, it may not be feasible to terminate or clamp each conduit directly to the cable tray. In this case, each conduit should be terminated with a bonding bushing and the conduits bonded to the cable tray in the manner described in 8.4.8.5.

In a typical industrial installation, cables exit the cable tray system either above or below the equipment to which they connect. Common practice is to run the cables exposed for the short distance between the cable tray system and the equipment, using cable supports as required. The NEC requires bonding between the cable tray system and the equipment under these conditions. Recommended practice is to construct a cable support structure using galvanized steel metal framing channel connected mechanically to both the cable tray system and the equipment. The metal framing channels provide a good high-frequency path between the cable tray system and the equipment. Local code enforcement authorities may not accept the cable support structure as an acceptable bonding path between the cable tray and equipment. They may require that bonding conductors be used in addition to the support structure. These additional conductors may not provide a low-impedance path at high frequencies, unless their length is very short. For cables used on circuits that are very noise sensitive, the path between the cable tray and equipment should be via metallic conduits.

8.5 Grounding considerations

Proper grounding techniques are necessary for safety, equipment operation, and performance reasons. The integrity of the facility grounding, and thus the integrity of proper equipment operation, depends on proper bonding of the grounding electrode systems, proper system grounding of service equipment and separately derived sources, and proper equipment grounding for power-related frequencies as well as higher frequencies. Recommended practice is for all grounding design and installation be compliant to all applicable codes and standards. Refer to the NEC and IEEE Std 142-1991 for proper safety grounding techniques.

Copyright © 1999 IEEE. All rights reserved.

Copyright by the Institute Of Electrical & Electronics Engineers Inc
Fri Jul 20 10:38:29 2001

Recommended practice is to utilize solidly grounded ac supply systems and install insulated (non-bare) equipment grounding conductors in circuits supplying electronic load equipment. All metal equipment parts such as enclosures, racks, raceways and conduits, equipment grounding conductors, and all grounding electrodes shall be bonded together into a continuous electrically conductive system. All grounding electrodes used for grounding of the power system, grounding of communications systems, and grounding of lightning protection systems shall be effectively and permanently bonded to each other as required by the NEC and NFPA 780-1997 (see Figure 8-6). All metallic systems shall be bonded to the power system grounding electrode system at the service entrance and at each separately derived power system on the premises. Specific metallic systems included in this requirement are the main and interior cold-water piping systems, the structural building steel system, and any other earth grounding electrodes that may be present on the premises.

The metal parts of equipment enclosures and racks, conduits and raceways, and equipment grounding conductors on the premises that are likely to be energized by electrical currents (due to circuit faults, electrostatic discharge, and lightning) shall be effectively grounded for reasons of personnel safety, fire hazard reduction, equipment protection, and equipment performance. Grounding these metallic objects will facilitate the operation of overcurrent protective devices during ground faults, and permit return currents from electromagnetic interference filters and surge protective devices, which are connected line-to-ground or line-to-chassis, to flow in proper fashion. All metallic conduits and raceways in areas containing electronic load equipment should be carefully bonded to form an electrically continuous conductor. This requirement is in addition to the recommended practice that a separate insulated equipment grounding conductor be installed with each branch circuit serving the electronic loads.

Recommended practice is that all grounding and bonding connections for metal piping systems be noted on the appropriate mechanical and electrical drawings. The use of clear, standardized, and detailed drawings to show design intent is strongly recommended to ensure consistent interpretation by the installing personnel. Drawings of existing buildings should also be reviewed for grounded and bonded items that are not properly noted. All mechanical equipment in the electronic equipment areas should be effectively grounded for electrical safety (NEC), for lightning protection (NFPA 780-1997), and for noise-current control. Such equipment (including building steel, metallic structural framing, equipment chassis, piping, ducting, and electrical conduit and raceways) should be grounded or bonded to local building steel using direct or higher-frequency grounding and bonding means. When located in the same area as the electronic load equipment, mechanical equipment should be bonded at multiple points to the same ground reference as the electronic load equipment. Heating, ventilation, air conditioning, and process cooling equipment, and related metal piping and electrical conduits are recommended to be bonded to the same ground reference serving the electronic load equipment.

 Copyright © 1999 IEEE. All rights reserved.

Copyright by the Institute Of Electrical & Electronics Engineers Inc
Fri Jul 20 10:38:30 2001

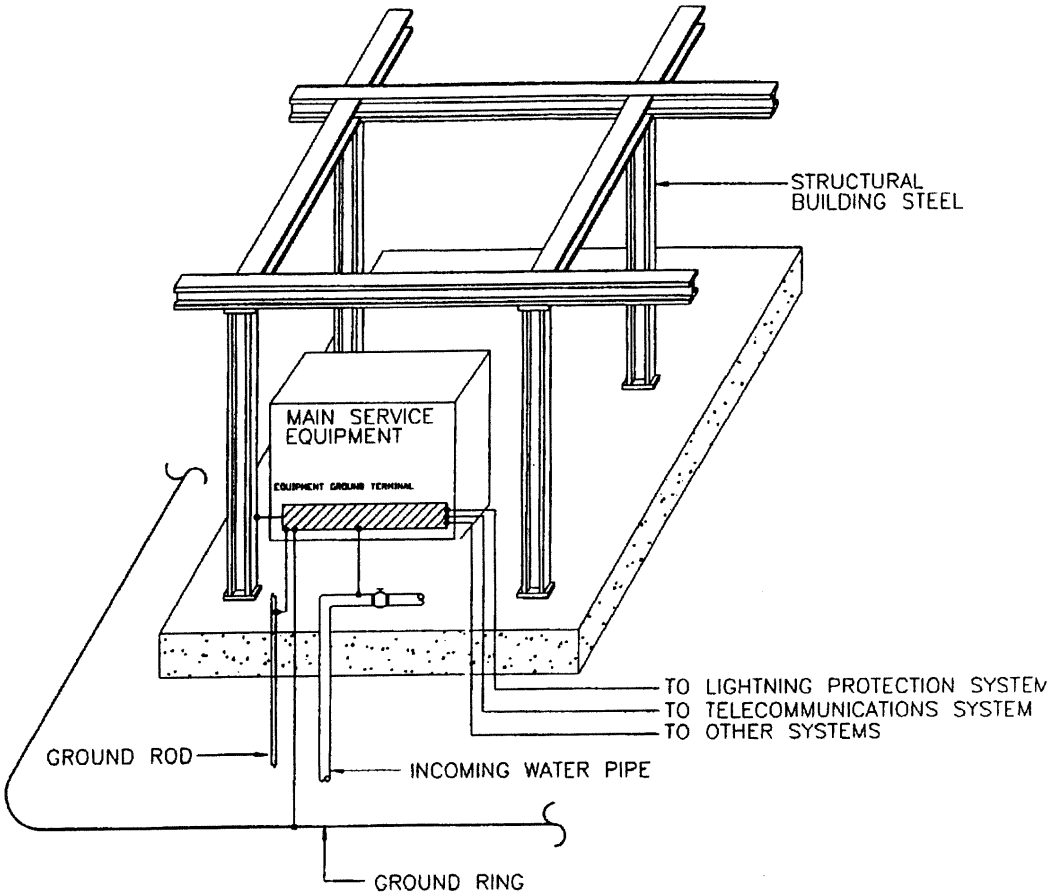

Figure 8-6—Interconnection of building grounding electrodes

8.5.1 Grounding electrode system

The installation of separate grounding electrodes that are intentionally not bonded to the power system grounding electrode system is strictly forbidden by the NEC. Such separate grounding electrodes typically take the form of driven ground rods that are installed in an unapproved attempt to isolate certain pieces of equipment from the power system ground. This installation technique violates the NEC and may cause extreme and hazardous voltage conditions to exist between differently grounded metal objects during power system faults and lightning activity.

It is easier to provide a reliable grounding system for electronic load equipment housed in buildings constructed of structural steel. Buildings constructed of reinforced concrete are not as effective for grounding and intersystem bonding separately derived sources located remotely from the service entrance. This is compounded in some modern facilities that utilize nonmetallic means for interior water piping. Where building steel is accessible, it should be

Copyright © 1999 IEEE. All rights reserved.

Copyright by the Institute Of Electrical & Electronics Engineers Inc
Fri Jul 20 10:38:31 2001

effectively grounded and bonded into a single, electrically conductive mass. Such grounding and bonding may be by compression connections, mechanical fittings, welding, bolting, or riveting. The building steel system should be bonded to the grounded service conductor (typically the neutral) and the equipment grounding conductors at the service entrance, and to the main (metallic) cold-water piping system. Effective grounding (earthing) of the structural building steel system is recommended and should be accomplished by one or more of the following means:

a) By direct burial or concrete-encased structural building steel electrodes in foundation footings.

b) By a made earth-grounding electrode system, such as a buried ground ring connected at multiple points to building steel.

8.5.1.1 Metal underground water pipe

Due to the increased use of nonmetallic water piping systems, the metal underground water pipe is no longer permitted to be solely used as a grounding electrode per the NEC. Where the metal underground water pipe enters a facility, it shall be supplemented by at least one other grounding electrode as described in the NEC.

8.5.2 System grounding

"System grounding" refers to the intentional connection of a circuit conductor (typically the neutral on a three-phase, four-wire system) to earth. Separately derived power sources and power service entrances are required to be grounded. The purpose of the system ground is for both electrical safety to personnel and equipment, and fire safety reasons. System grounding also impacts the performance of electronic load equipment for reasons relating to the control of common-mode noise and lightning current.

From a safety standpoint, solidly grounded power systems promote the timely operation of overcurrent protective devices in case of ground faults, limit the potential difference between grounded objects, stabilize the phase voltages with reference to ground, and limit transient voltages due to lightning and load switching. From a performance standpoint, solidly grounded power systems are recommended practice to ensure the existence of an effective conductive path for the return current of filters and surge protective devices connected line-to-ground or line-to-chassis. These filters and surge protective devices may be an integral part of the electronic load equipment or may be separately mounted devices located in the building electrical distribution system. Recommended practice is to design for the lowest reasonable impedance between the load equipment containing a filter or surge protective device and the associated power system source. Low-inductance wiring methods should also be used.

If a separately derived source (e.g., a transformer, inverter winding, or alternator.) is used, the secondary grounded circuit conductor (e.g., neutral) shall be bonded to the equipment grounding terminal or bus of the separately derived source and grounded to the nearest effectively grounded electrode (typically, building steel). If no effectively grounded electrode or building steel is available, then the separately derived source should be connected to the service entrance grounding point via a dedicated grounding electrode conductor installed in the

 Copyright © 1999 IEEE. All rights reserved.

Copyright by the Institute Of Electrical & Electronics Engineers Inc
Fri Jul 20 10:38:32 2001

most direct and shortest path practicable. In either case, if metal interior piping is present near the separately derived source, a supplemental grounding electrode conductor should also be installed from the equipment grounding terminal or bus of the separately derived source to the metal interior water piping.

There are basically two requirements for grounding power services and separately derived systems. The first requirement is to bond the grounded circuit conductor to the grounded enclosure. For power service entrances, the incoming neutral conductor is bonded to the equipment ground bus in the switchboard by means of the main bonding jumper. For separately derived sources, the derived neutral is bonded to the equipment grounding terminal or bus on the enclosure of the transformer, UPS, generator, or other equipment that meets the definition of separately derived source. The second requirement is that the equipment ground bus in the power service switchboard or the equipment grounding terminal or bus of the separately derived source be connected to the nearest effectively grounded electrode by means of the grounding electrode conductor. Location of the bonding jumper or connection of the grounding electrode conductor to the power system neutral in the meter base or other intervening location is not recommended. Figure 8-7 illustrates the recommended technique for fulfilling system grounding requirements of a typical isolation transformer.

It is important to note that the NEC prohibits connecting the grounded circuit conductor (typically the neutral) to the equipment grounding conductor at more than one point. This requires careful consideration when determining system grounding requirements of UPS systems with bypass circuits. The proper grounding of UPS systems is critical from a personnel safety, and equipment protection and performance standpoint. The following are recommended practices for properly grounding various UPS system and load configurations. The intent is to show typical UPS configurations with particular attention directed toward system grounding requirements in compliance with the NEC. Other UPS configurations exist and should be addressed on an individual basis.

8.5.2.1 UPS grounding schemes

8.5.2.1.1 Configuration 1—single UPS module, nonisolated bypass, grounded-wye service

In this arrangement, see Figure 8-8, a grounded-wye service is connected to both the main input and bypass (reserve) input of a single UPS module, and the power distribution center does not contain an isolation transformer. The neutral, which is bonded to the grounding conductor at the service entrance equipment, is brought into the UPS module.

Copyright © 1999 IEEE. All rights reserved.

Copyright by the Institute Of Electrical & Electronics Engineers Inc
Fri Jul 20 10:38:33 2001

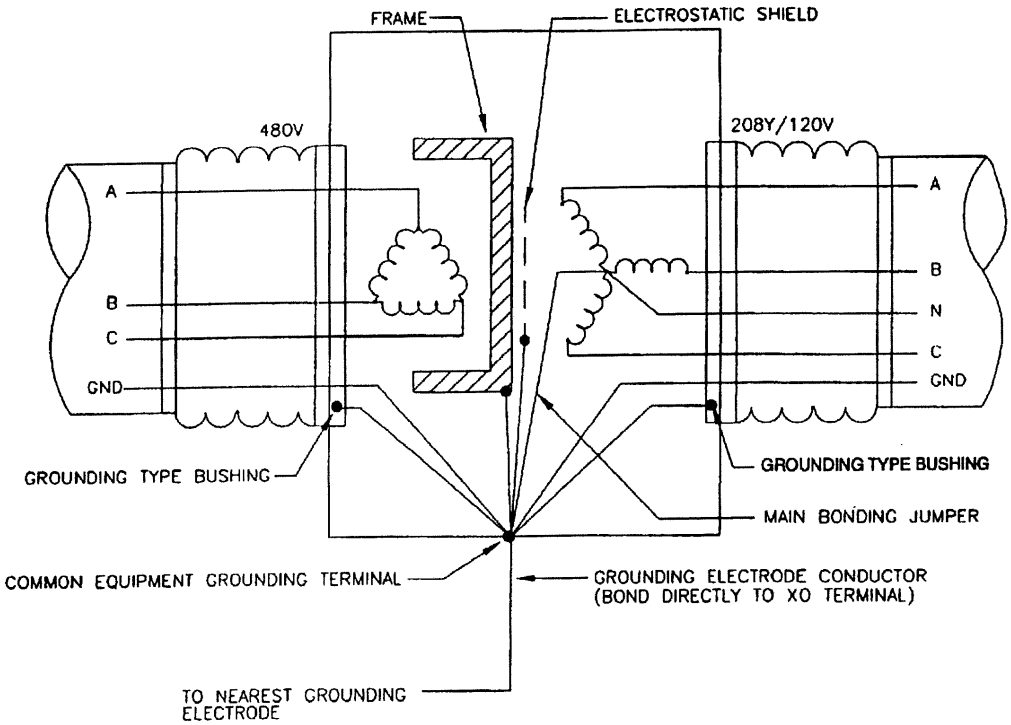

Figure 8-7—System grounding requirements of isolation transformer

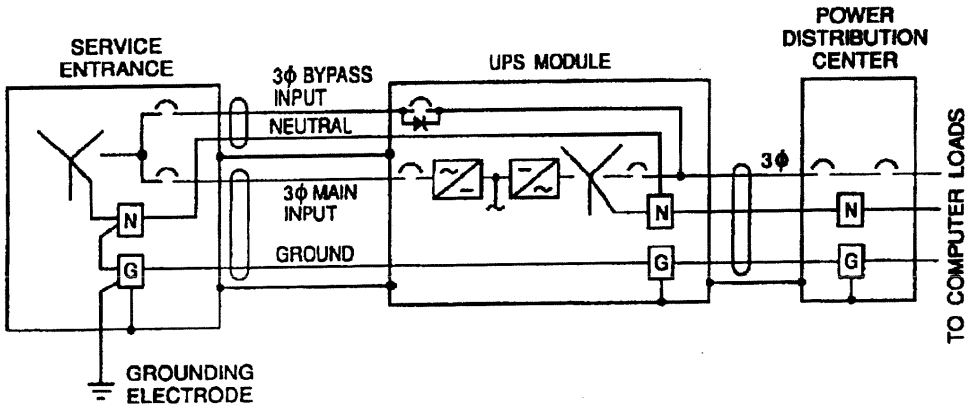

Figure 8-8—Configuration 1

Copyright © 1999 IEEE. All rights reserved.

Copyright by the Institute Of Electrical & Electronics Engineers Inc
Fri Jul 20 10:38:34 2001

8.5.2.1.1.1 Grounded/grounding conductor arrangement

Since the UPS module output neutral is solidly connected to the bypass input (service entrance) neutral, the UPS module is not considered a separately derived system according to the NEC. In this system

a) The UPS neutral should not be bonded to the equipment grounding conductor; and

b) No local grounding electrode conductor should be installed to the UPS module.

8.5.2.1.1.2 Features/performance

While this arrangement may be typical for 208 V input/208 V output UPS systems, it does not provide any isolation or common-mode noise attenuation for sensitive loads. It appears that ground-fault current from the inverter may adversely affect the service entrance ground fault relay for standby generators, as shown in Chapter 7 of IEEE Std 446-1987. In many cases, the inverter cannot supply ground-fault current since the static switch will transfer because of the fault-depressed voltage.

8.5.2.1.2 Configuration 2—single UPS module, isolated bypass

In this configuration (see Figure 8-9), a bypass transformer is used to feed the bypass input of the UPS module. The bypass transformer and UPS module together constitute a separately derived system, since there is no direct electrical connection between the input (service entrance) circuit conductors and the output circuit conductors.

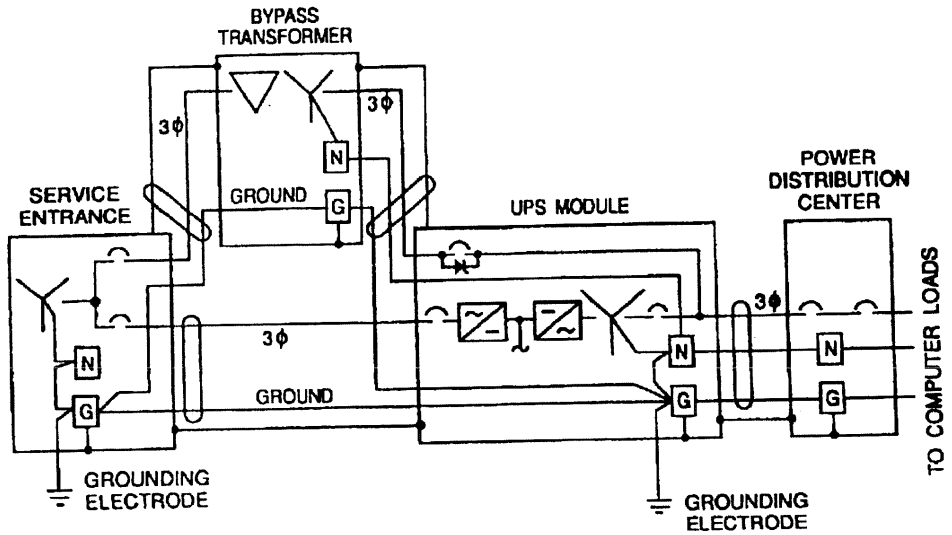

Figure 8-9—Configuration 2

Copyright © 1999 IEEE. All rights reserved.

Copyright by the Institute Of Electrical & Electronics Engineers Inc
Fri Jul 20 10:38:35 2001

8.5.2.1.2.1 Grounded/grounding conductor arrangement

Since this configuration is considered a separately derived source, the neutral of the UPS module should be bonded to the equipment grounding conductor, and a local grounding electrode module should be installed. (In this particular system, the bonding of the neutral to the grounding conductor could be done at either the bypass transformer or at the UPS module—the UPS module is chosen for the point of bonding because it is in the normal power flow and is electrically closer to the load). The bypass transformer is used in the bypass input to provide isolation and to step down the voltage if required (e.g., in a 480 V input/208 V output configuration).

8.5.2.1.2.2 Features/performance

With this arrangement, isolation from the input is achieved and common-mode noise attenuation can be obtained for the electronic loads if the UPS and bypass transformer are located electrically close [recommendation is 15.2 m (50 ft) or less] to the power distribution center and the sensitive loads.

8.5.2.1.3 Configuration 3—single UPS module, nonisolated bypass, isolated distribution center

In Configuration 3 (see Figure 8-10), the UPS module main input and bypass input are connected to a grounded-wye service in the same manner as Configuration 1.

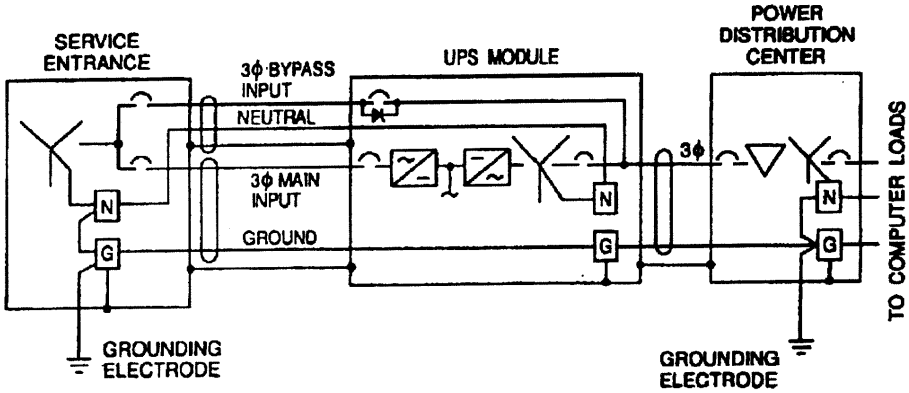

Figure 8-10—Configuration 3

8.5.2.1.3.1 Ground/grounding conductor arrangement

As explained in Configuration 1, the UPS module is not considered to be a separately derived source, since the neutral is bonded to the grounding conductor at the service entrance equipment and is solidly connected to the UPS module output neutral. Therefore, the UPS neutral would not be bonded to the equipment grounding conductor in the UPS module. However, the power distribution center is provided with an isolation transformer and is considered a

 Copyright © 1999 IEEE. All rights reserved.

Copyright by the Institute Of Electrical & Electronics Engineers Inc
Fri Jul 20 10:38:36 2001

separately derived source. Therefore, the power distribution center neutral should be bonded to the equipment grounding conductor and should be connected to a local grounding electrode.

8.5.2.1.3.2 Features/performance

This arrangement can be applied to 208 V input/208 V output UPS modules, as well as to 480 V input/480 V output UPS modules. (The voltage stepdown to 208 V occurs in the power distribution center). The common-mode noise attenuation of this arrangement is better than Configuration 1 or Configuration 2, since the isolation (common-mode rejection) occurs as close to the load as is practical. Using this configuration, the UPS module can be located remotely from the power distribution center without compromising the common-mode noise performance. Also, by using 480 V input/480 V output UPS modules, smaller and less costly power feeders can be used and less voltage drop (as a percent of nominal) can be obtained. This is the preferred arrangement when using UPS modules and power distribution centers.

8.5.2.1.4 Configuration 4—single UPS module, 3-wire bypass, isolated distribution center, grounded-wye service

Configuration 4 is similar to Configuration 3 except that the service entrance neutral is not included in the bypass input power feed.

8.5.2.1.4.1 Grounded/grounding conductor arrangement

In Configuration 4, the neutral of the service entrance equipment is not brought into the UPS module. The UPS module is, therefore, considered a separately derived source. As such, the neutral should be bonded to the equipment grounding conductor, and a local grounding electrode conductor should be installed. Since the power distribution center contains an isolation transformer, it also is a separately derived source. This neutral should also be bonded to the equipment grounding conductor and to a local grounding electrode.

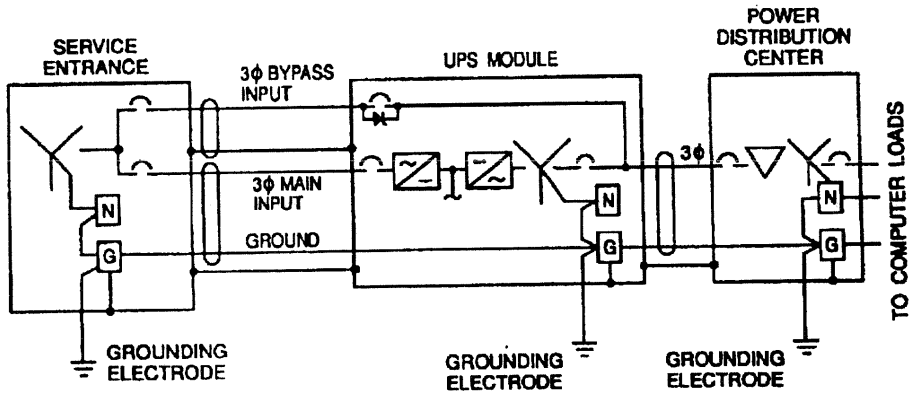

Figure 8-11—Configuration 4

Copyright © 1999 IEEE. All rights reserved.

Copyright by the Institute Of Electrical & Electronics Engineers Inc
Fri Jul 20 10:38:37 2001

8.5.2.1.4.2 Features/performance

The scheme shown in Figure 8-11 serves as an alternative to the scheme shown in Figure 8-10 when no neutral is available for the bypass input, provided that

a) The main input and bypass input are fed from the same source;

b) The source is a solidly grounded wye source; and

c) No neutral is required for the UPS load.

With some UPS systems, the neutral should be included with the bypass input, even if not required for the output, because the neutral is used for sensing and monitoring of the bypass input.

As in Configuration 3, since the power distribution center contains an isolation transformer, isolation and common-mode noise reduction occurs when the center is located as close to the load as is practical.

8.5.2.1.5 Configuration 5—single UPS module, isolated bypass, delta-connected source

Configuration 5 (see Figure 8-12) is similar to Configuration 2, with the exception that the input power source (service entrance) is delta connected. Most UPS modules require that the bypass input be fed from a wye-connected source. Therefore, when the UPS module is used with other than a wye-connected source, the bypass input should be fed from a bypass transformer with a wye-connected secondary.

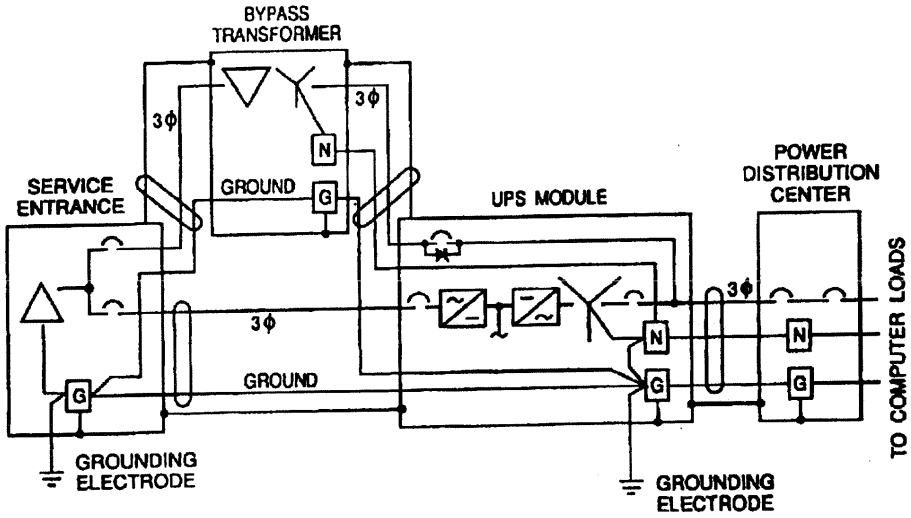

Figure 8-12—Configuration 5

Copyright © 1999 IEEE. All rights reserved.

Copyright by the Institute Of Electrical & Electronics Engineers Inc
Fri Jul 20 10:38:38 2001

8.5.2.1.5.1 Grounded/grounding conductor arrangement

In Configuration 5, as in Configuration 2, the UPS module neutral should be bonded to the equipment grounding conductor, and a local grounding electrode conductor should be installed.

8.5.2.1.5.2 Features/performance

With this arrangement, as in Configuration 2, isolation from the input is achieved, and common-mode noise attenuation can be obtained for the electronic loads if the UPS and bypass transformer are located electrically close (recommended 15.2 m (50 ft) or less) to the power distribution center and to the electronic loads.

8.5.2.1.6 Configuration 6—multiple-module UPS system example

In general, a multiple-module UPS system may be thought of as being an extension of a particular single-module system, except that the UPS "block" is now composed of more than one UPS module, and everything (including the bypass) feeds through a stand-alone static transfer switch. As an example, consider Figure 8-13 as the multiple-module extension of the same grounding scheme shown in Figure 8-11.

8.5.2.1.6.1 Grounded/grounding conductor arrangement

Figure 8-13 illustrates one of the grounding schemes for multiple UPS modules with a stand-alone static switch. In this configuration, the bypass transformer and UPS modules 1 and 2 are considered to be a separately derived system, since there is no direct electrical connection between the input and output circuit conductors. In order to provide a central point for bonding the UPS output neutral to the ground for the entire UPS scheme, the stand-alone static switch is utilized. (When the neutral is bonded to the grounding conductor in the stand-alone static switch, full-size neutrals shall be run from the UPS modules and bypass transformer to the static switch, regardless of whether the neutral is required for the static switch loads.) The neutral-to-grounding-conductor bond and the local grounding electrode conductor should be installed.

8.5.2.1.6.2 Features/performance

By using the static switch to provide the central point for bonding the neutral to the grounding conductor, as in this sample multiple-UPS module configuration, a UPS module could be removed from, or added to, the overall scheme without jeopardizing the integrity of the grounding system.

Depending upon the multiple-module configuration, the grounding concepts of single-model Configurations 1 through 5 can be applied.

Copyright © 1999 IEEE. All rights reserved.

Copyright by the Institute Of Electrical & Electronics Engineers Inc
Fri Jul 20 10:38:39 2001

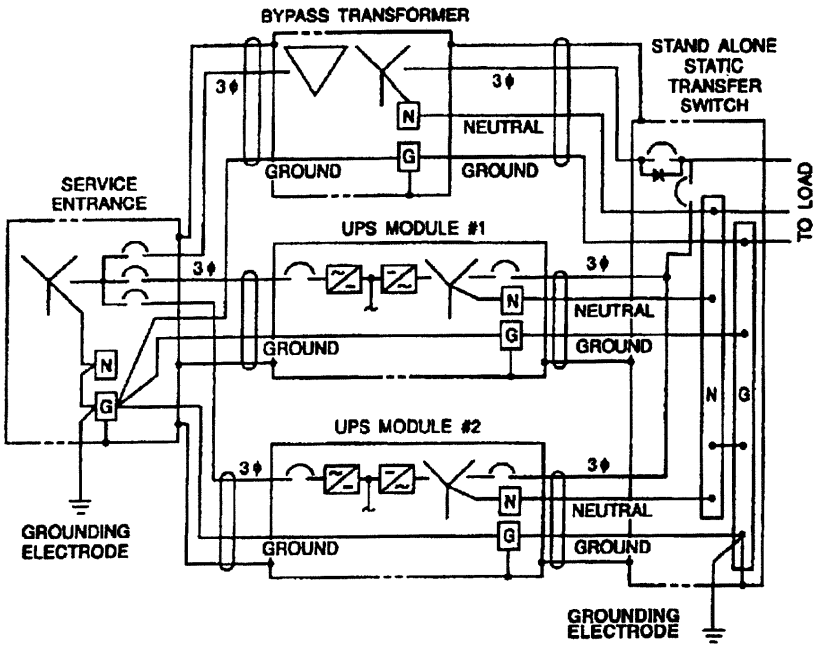

Figure 8-13—Configuration 6

8.5.2.1.7 Configuration 7—multiple-module 415 Hz UPS system

In Configuration 7 (see Figure 8-14), the 415 Hz UPS module main input is connected to the grounded-wye service in the same manner as the previous 60 Hz UPS configurations. No bypass feed is used with 415 Hz UPS modules.

8.5.2.1.7.1 Grounded/grounding conductor arrangement

In Configuration 7 there is no bypass feeder, so the neutral of the service entrance equipment is not connected to the UPS output neutral. The UPS module is considered a separately derived source. As such the UPS output neutral should be bonded to the equipment grounding conductor and a local grounding electrode conductor should be installed. In this case, both UPS modules would meet the NEC requirements for a separately derived source. To provide a central point for bonding the UPS output neutral to the ground for the entire UPS system, the neutral-to-grounding-conductor bond should be made in the output switchgear (if a single 415 Hz UPS module is used, the neutral-to-grounding-conductor bond should be made inside the UPS module).

Copyright © 1999 IEEE. All rights reserved.

Copyright by the Institute Of Electrical & Electronics Engineers Inc
Fri Jul 20 10:38:40 2001

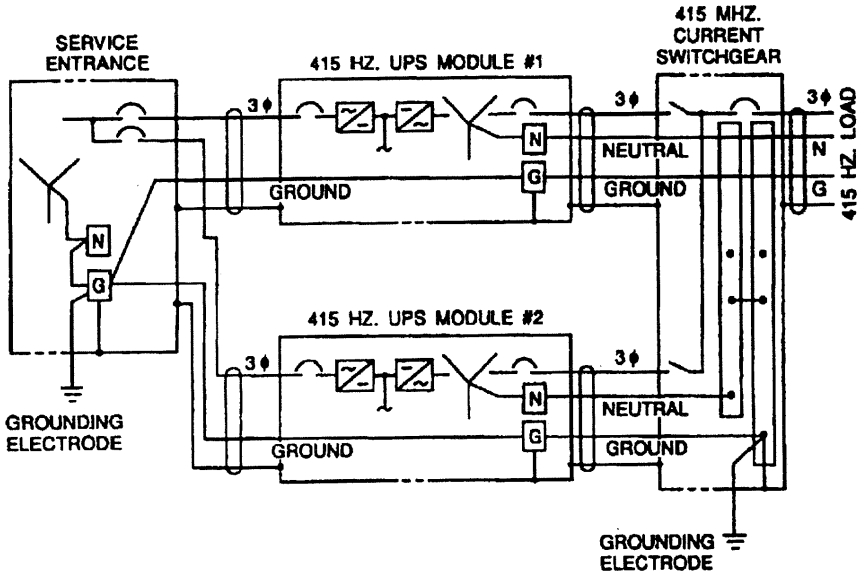

Figure 8-14—Configuration 7

8.5.2.1.7.2 Features/performance

Using the output switchgear to provide the central point for bonding the neutral to the

Copyright by the Institute Of Electrical & Electronics Engineers Inc
Fri Jul 20 10:38:40 2001

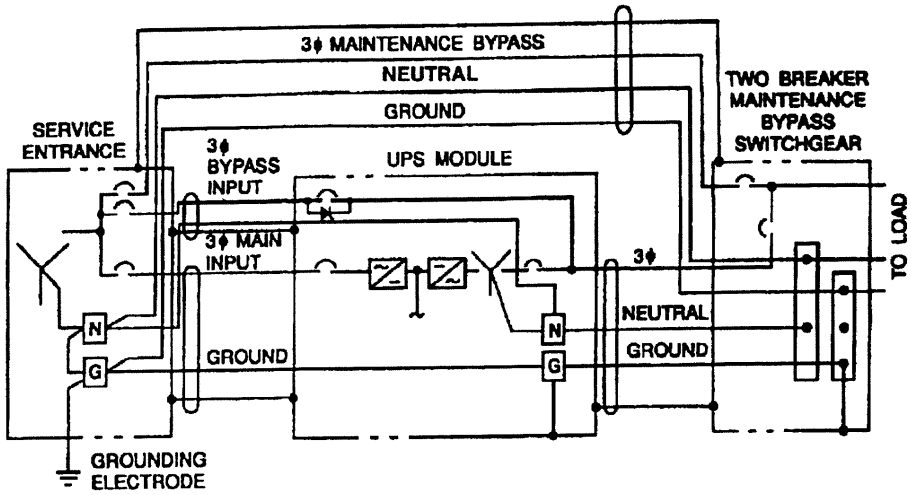

Figure 8-15—Configuration 8 (four-wire)

8.5.2.1.8.2 Features/performance

This arrangement does not provide any isolation or common-mode noise attenuation for electronic loads. If a power distribution center with an isolation transformer is provided downstream from the UPS system (near the electronic load), the common-mode noise attenuation of this arrangement would be greatly improved. Also, since the power distribution center with transformer requires only a three-phase, three-wire plus ground input, the neutral conductor would not need to be connected from the service entrance to the UPS bypass, and from the service entrance or the UPS output to the maintenance bypass switchgear (see Figure 8-16).

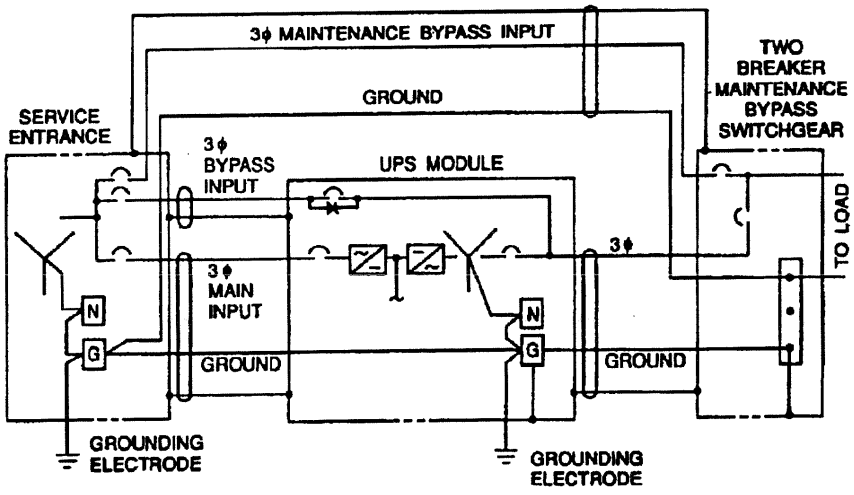

Figure 8-16—Configuration 8 (three-wire)

Copyright © 1999 IEEE. All rights reserved.

Copyright by the Institute Of Electrical & Electronics Engineers Inc
Fri Jul 20 10:38:41 2001

8.5.3 Equipment grounding

The term "equipment grounding" refers to the connection to power system ground of all non-current-carrying metallic parts of a power system that may come into accidental contact with circuit phase and neutral conductors. These metallic parts include raceways, conduits, equipment grounding conductors, and equipment enclosures and racks. All these items are ultimately grounded together at the grounding electrode of the power service or separately derived system. Equipment grounding is required for both personnel safety and power system protection.

From a personnel safety standpoint, properly grounded system components minimize potential differences that may exist between various system components under steady-state and transient conditions. From a system protection standpoint, properly grounded system components provide a low impedance path for ground fault currents and promote the timely operation of overcurrent protective devices in case of ground faults.

Recommended practice is to use insulated (non-bare) equipment grounding conductors installed in grounded metal conduit and run with the other circuit conductors feeding electronic load equipment. Although the installation of an insulated equipment grounding conductor to supplement the grounded raceway or conduit is not required by the NEC, this additional equipment grounding conductor is vital for circuits serving electronic load equipment. The intent of the equipment grounding conductor is twofold. In standard equipment grounding configurations, the equipment grounding conductor provides a supplemental low-impedance ground path in parallel with the metallic conduit or raceway from the electronic load equipment to the power system or separately derived system. In isolated ground configurations, the additional equipment grounding conductor provides the sole grounding path from the electronic load equipment to the power system or separately derived system. The grounded metallic conduit acts as an electromagnetic shield for the circuit serving the electronic load equipment. In either case, the insulated equipment grounding conductor(s) shall be run in the same raceway or conduit as the phase and neutral conductors. Grounding configurations provide equalizing of potential between grounded objects at 60 Hz. But as the frequency increases, other grounding means must also be considered to cover frequencies in higher ranges.

8.5.3.1 Standard equipment ground configuration

The standard equipment ground configuration uses an insulated equipment grounding conductor, typically green in color, run with the phase and neutral conductors to supplement grounded metal raceway and conduit. The conduit and raceway systems may rely solely on the integrity of mechanical connections at conduit and raceway joints, panelboards, junction boxes, pull boxes and at the receptacles themselves. Ineffective grounding paths can compromise personnel safety as well as the operation of surge suppressors and filters located in electronic load equipment. In addition, currents flowing on grounded surfaces may take less desirable paths, such as through load equipment and associated data cables. The purpose of the insulated equipment grounding conductor is to augment the reliability of the grounded metal conduit system. The proper installation of conduits, raceways, and interconnected

Copyright © 1999 IEEE. All rights reserved.

Copyright by the Institute Of Electrical & Electronics Engineers Inc
Fri Jul 20 10:38:42 2001

equipment to provide an effective low impedance, effective ground path cannot be overemphasized.

Recommended practice is for the insulated equipment grounding conductors to be sized per the NEC table for equipment grounding conductors and be properly connected and bonded to each metal enclosure that it passes through from the separately derived system or power service to the electronic load equipment. These metal enclosures include all distribution panelboards, safety switches, circuit breaker enclosures, transformers, and branch circuit panelboards, as well as all pull boxes, junction boxes, and metal outlet boxes.

There are different types of conduit systems that offer better shielding and grounding properties than others. In all cases, the recommended practice is for grounding bushings (and associated grounding conductors) to be installed to supplement the mechanical connections at each location that the conduit system is connected to metal enclosures. These different types of conduit systems, their recommended installation practices, and the application of grounding bushings are discussed in more detail in 8.4.8.

8.5.3.2 Isolated ground configuration

The isolated ground configuration also uses an insulated equipment grounding conductor, typically green in color with yellow stripe, run with the phase, neutral, and standard equipment grounding conductors from the electronic load equipment to the equipment grounding terminal of the power system or separately derived system. As opposed to the standard equipment grounding configuration, this additional insulated equipment grounding conductor typically connects the isolated ground receptacle (IGR) only to the equipment grounding terminal or bus of the power system source or separately derived system. This equipment grounding conductor extends radially downstream to the chassis of the electronic load equipment without contacting any grounded metal surfaces such as metal conduits and raceways, panelboards, and outlet boxes for receptacles (see Figure 8-17 and Figure 8-18). When this equipment grounding configuration is used, the enclosing metal raceway must still be properly grounded. This type of equipment grounding configuration is only intended to be used for reducing common-mode electrical noise on the electronic load equipment circuit as described in the NEC. It has no other purpose and its effects are variable and controversial. The use of the traditional orange-colored isolated grounding receptacle for the express purpose of identifying computer grade power is not allowed per the NEC. If unacceptable electromagnetic interference is found to be active on the circuit, an isolated grounding receptacle circuit may be considered as one potential mitigation method. Robust design of the electronic load equipment for immunity to disturbances on the grounding circuit is another method. Particularly for distributed computing and telecommunications electronic loads, using optical signaling interfaces reduces susceptibility to disturbances on the grounding circuit.

 Copyright © 1999 IEEE. All rights reserved.

Copyright by the Institute Of Electrical & Electronics Engineers Inc
Fri Jul 20 10:38:43 2001

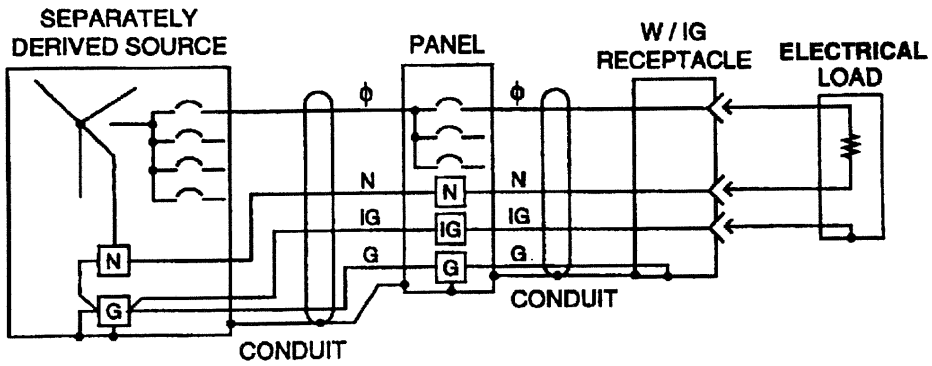

Figure 8-17—Isolated grounding conductor pass through distribution panel

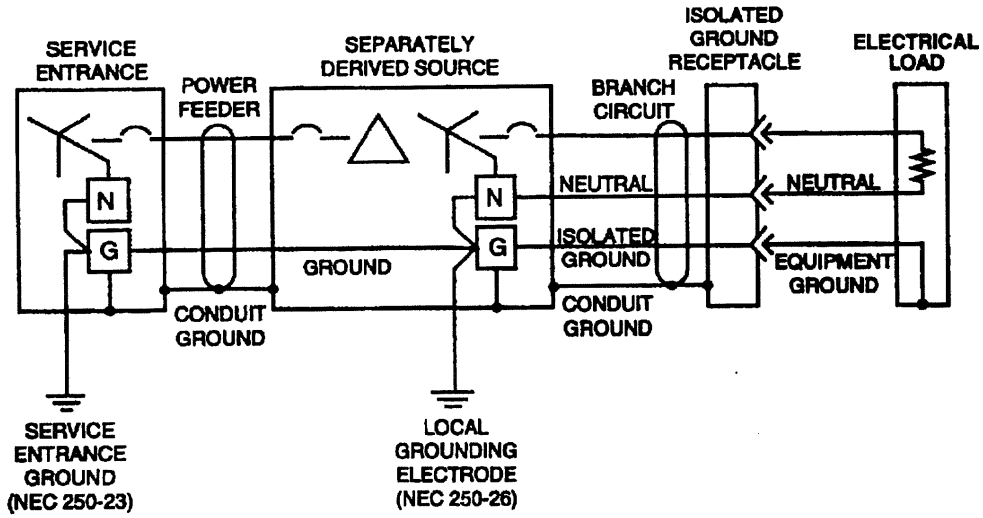

Figure 8-18—Isolated grounding conductor wiring method with separately derived source

Results from the use of the isolated ground method range from no observable effects, the desired effects, or worse noise conditions than when standard equipment grounding configurations are used to serve electronic load equipment. These effects (if any) will be somewhat proportional to the overall length of the circuit (see Lewis [B4]). The greater the length of the circuit, the greater the expected effects of the isolated equipment grounding circuit. However, these effects may again be either increased or decreased noise conditions. Application of the isolated equipment grounding configuration in close proximity to the system deriving the isolated ground circuit will normally not produce any practical effects. However, as the length of the isolated equipment grounding circuit increases, another concern arises. Under lightning or power system fault conditions, the potential difference between the electronic load equipment and grounded objects may be sufficient to cause a safety hazard or disrupt electronic load equipment performance.

Copyright © 1999 IEEE. All rights reserved.

Copyright by the Institute Of Electrical & Electronics Engineers Inc
Fri Jul 20 10:38:44 2001

The isolated grounding configuration is only directly applicable to metal-enclosed wiring means and has no useful purpose with nonmetallic wiring systems. Nonmetallic wiring systems are at least partially constructed as if they are isolated grounding types, since no metal conduit or raceway is involved in the wiring path to be bonded to the equipment grounding conductor of the circuit. An exception is where the branch circuit outlet is locally bonded to a grounded metallic object. In any case, the nonmetallic wiring system does not provide electromagnetic shielding for the enclosed circuit conductors and should not be used. Safety and performance concerns related to the length of the nonmetallic wiring system are similar to those described for the isolated grounding receptacle circuit.

The use of the isolated ground configuration may provide beneficial effects to circuits that supply electronic load equipment that do not otherwise connect to grounded objects. The conduit acts as a shield for the circuit conductors and the isolated equipment grounding conductor against radiated noise. In addition, conducted ground currents are discouraged from entering the electronic load equipment. However, if the electronic equipment contains other connections to grounded objects, the integrity and purpose of the isolated grounding configuration is defeated. These connections to ground may be either intentional or unintentional. Typical examples of these connections are interconnections of various equipment through grounded shields of data cables and bonding of equipment chassis to grounded metal equipment racks. These connections defeat the intent of the isolated grounding configuration and may allow conducted ground currents to enter electronic load equipment and may also encourage induced currents from the power conductors to take less desirable paths — such as through data cables (see Gruzs [B1]). Proper installation of the isolated equipment grounding configuration relies on the use of special receptacles, special equipment grounding buses, and proper installation practices concerning the routing and identification of the isolated equipment grounding conductor.

8.5.3.2.1 Isolated grounding receptacles

Branch circuit (and listed ac power interconnecting cable) outlet receptacles served by continuous, metallic raceways may be wired as an isolated equipment grounding configuration. This configuration requires the use of listed isolated grounding receptacles in which the equipment grounding conductor pin is factory insulated from the metal mounting yoke of the receptacle. Equipment grounding conductors shall terminate to the ground pin for safe and proper operation of the connected load equipment. Previous listed isolated ground receptacles were identified by an orange color. In addition, some receptacles had a triangle or delta embossed on the face of the receptacle. Isolated ground receptacles meeting current listing requirements are permanently identified by an embossed orange-colored triangle or delta on the face of the receptacle, and the receptacle may be of any color. Current listing standards permits standard receptacles to be of any color, including orange. Therefore, unless an orange-colored triangle or delta is embossed on the face of the receptacle, it should never be assumed to be an isolated grounding-type receptacle. Recommended practice is for the color of the isolated grounding receptacles to be consistent throughout the facility to differentiate them from standard grounding receptacles.

The designer is allowed to choose the point between the power system or separately derived system supplying the circuit at which the receptacle equipment grounding conductor pin and

 Copyright © 1999 IEEE. All rights reserved.

Copyright by the Institute Of Electrical & Electronics Engineers Inc
Fri Jul 20 10:38:45 2001

the metal conduit or raceway or equipment enclosure system are made common. Such a connection shall conform to the requirements of the NEC. In general, the choices for grounding the upstream end of the isolated equipment grounding conductor are limited to the first panelboard, other upstream panelboards or switchboards, or the separately derived system supplying the circuit. An isolated equipment grounding arrangement may be continued from the receptacle upstream to a point no further than the first power system ground at the separately derived system or service entrance for that receptacle.

8.5.3.2.2 Isolated ground bus

Switchboards, panelboards, or other equipment may require both an isolated equipment grounding bus and a standard equipment grounding bus within the same enclosure. The same bus logically cannot be used for both under all conditions, e.g., where the isolated equipment grounding circuit is continued upstream through a panelboard. However, if a specific piece of equipment is actually the termination point for the isolated equipment grounding conductor, it is possible to use the same equipment grounding bus for both the standard equipment grounding conductors and the isolated equipment grounding conductors within that equipment's enclosure. A common situation is where only the branch circuits are isolated equipment grounding and standard equipment grounding styles, and are terminated within the panelboard containing the overcurrent protection for these branch circuits. In this case, a separate isolated equipment grounding bus and a standard equipment grounding bus are recommended to be provided within the same panelboard. Separate equipment grounding buses facilitate the convenient measurement of the total isolated equipment grounding current to the panelboard's metal enclosure via the low-inductance grounding jumper between the two equipment grounding buses.

8.5.3.2.3 Routing of isolated grounding conductors

All isolated equipment grounding conductors should be sized per the requirements of the NEC and are required to be routed within the same metallic conduit or raceway as the associated phase, neutral, and standard equipment grounding conductors for the entire length of the involved circuit. Terminations of the isolated equipment grounding conductors similarly shall remain within the associated equipment enclosure. Failure to adhere to this requirement will significantly increase the effective impedance of the isolated equipment grounding conductor during both fault conditions and normal conditions. This condition will negatively affect the operation of overcurrent protective devices, surge protective devices, and filters located in electronic load equipment, and may cause currents flowing on grounded surfaces to take less desirable paths such as through electronic load equipment and associated data cables. The use of any separate or isolated form of earth grounding electrodes for use as a point of connection of the isolated equipment grounding conductor is a violation of the NEC. Such an improper isolated grounding scheme does not meet code requirements for effective grounding. The generally perceived need for an isolated earth grounding electrode scheme in relation to the isolated method is not based on good engineering judgment. In the past, this unsafe method of grounding has been erroneously promoted in both advertisements and articles in various trade publications, and in obsolete technical information provided by misinformed vendors. More recent publications do not promote this erroneous method and tend to point out the fallacy of this method.

Copyright © 1999 IEEE. All rights reserved.

Copyright by the Institute Of Electrical & Electronics Engineers Inc
Fri Jul 20 10:38:46 2001

Improper installation of an isolated form of grounding electrode for the isolated equipment grounding conductor has two major flaws:

a) Under ground fault conditions, this path forms a high impedance return path which may desensitize or prevent the operation of overcurrent protective devices.

b) There is an inherent inability to limit the potential developed between the isolated equipment grounding electrode, the connected equipment, and other accessible grounded objects.

Lightning commonly creates conditions of several thousands to tens of thousands of volts between two (or more) such earth grounding electrodes according to FIPS PUB 94-1983. System ground faults may create similar problems in relation to the power system's nominal line-to-ground voltage and the fault-current magnitude. These conditions result in problems ranging from personnel hazard to equipment malfunction to component damage.

8.5.3.2.4 Identification of isolated grounding conductor

The isolated equipment grounding conductor should have green-colored insulation with a longitudinal yellow stripe. Black insulated conductors used for this equipment grounding function (typically larger than #6 AWG) should be color-coded with a combination of green and yellow tapes, applied next to each other, at both ends of the conductor and at all accessible locations along the length of the conductor.

Direct-connected (hardwired) circuits employing the isolated equipment grounding configuration should have their metal conduit/ or raceway or cable sheath prominently and permanently identified as such. This identification should be minimally made by labeling with an orange triangle symbol or by finishing both ends of the circuit with an orange color.

8.5.4 High-frequency grounding configuration

A signal reference structure (SRS) should be employed as the basic means of achieving a high-frequency common ground reference for all equipment within a contiguous area. A properly designed and installed SRS effectively equalizes ground potential over a broad range of frequencies from dc through the megahertz range. Accordingly, although it is often referred to as a high-frequency ground reference structure, it may be best described as a broadband ground reference system. The SRS typically can be economically and effectively constructed in the form of a signal reference grid. The use of a signal reference plane may be recommended for some applications where the subject system operates at a higher frequency than the typical signal reference grid design cut-off frequency.

Hybrid forms of SRS employing mixtures of signal reference grid and signal reference planes for varied construction and improved overall performance are also useful. They are used where the benefits of each type of SRS are needed for the collective support of a variety of interconnected electronic load equipment that is susceptible to common-mode noise current.

Improved high-frequency grounding for data signaling cables between (noncontiguous) areas can typically be accomplished by reducing the open loop area enclosed by the cable and its

 Copyright © 1999 IEEE. All rights reserved.

Copyright by the Institute Of Electrical & Electronics Engineers Inc
Fri Jul 20 10:38:47 2001

grounded surroundings. This is typically accomplished via the use of metal conduit or electrically continuous, solid-bottom, metal cable tray, wireway, or similar forms of signal transport ground-plane construction (see Lewis [B3]). These items should be used with supplementary grounding paths (e.g., frequent bonding to building steel or steel structural subfloor decking).

Recommended practice for high-frequency referencing of electronic load equipment does not involve the earth or any earth grounding electrode system except for electrical and fire safety purposes as described in the NEC and NFPA 780-1997. Earth and earth-related paths are not a desired or effective part of the signal path. Higher-frequency grounding principles are further discussed in Chapter 4.

An SRS may be typically constructed using one of the following four methods (in decreasing order of effectiveness):

— Solid covering of sheetmetal

— Grid of copper straps

— Grid of copper or aluminum wire

— Raised flooring substructure

When it is not practical or feasible to utilize the above means (specifically when equipment is located in areas outside equipment rooms), other possibilities for SRS involve the use of welded steel mesh such as that used in concrete reinforcing, galvanized steel sheet floor decking, welded galvanized steel screen with 6–13 mm (0.25–0.5 in) openings, or very thin copper or aluminum foils [0.375 mm (0.015 in) to 0.75 mm (0.03 in) thick] applied directly to the structural subfloor via adhesive or other suitable means. A sheetmetal signal reference plane or grid formed from thin foil may be installed directly beneath carpeting or similar floor covering, without being appreciably noticeable. Figure 8-19, Figure 8-20, Figure 8-21, and Figure 8-22 illustrate various methods of creating signal reference grids in these cases.

8.5.4.1 Solid covering of sheetmetal

The most effective (and most costly) SRS is one which is completely solid. This can be fabricated by using solid sheetmetal and solidly connecting all equipment directly to the sheetmetal using low-inductance means. This form works well in applications such as metal bulkheads used to terminate incoming power and communications cables and their respective shielding and surge protective devices. They may not be cost-justifiable when installed in large areas such as large information technology equipment and telecommunications rooms.

Copyright © 1999 IEEE. All rights reserved.

Copyright by the Institute Of Electrical & Electronics Engineers Inc
Fri Jul 20 10:38:49 2001

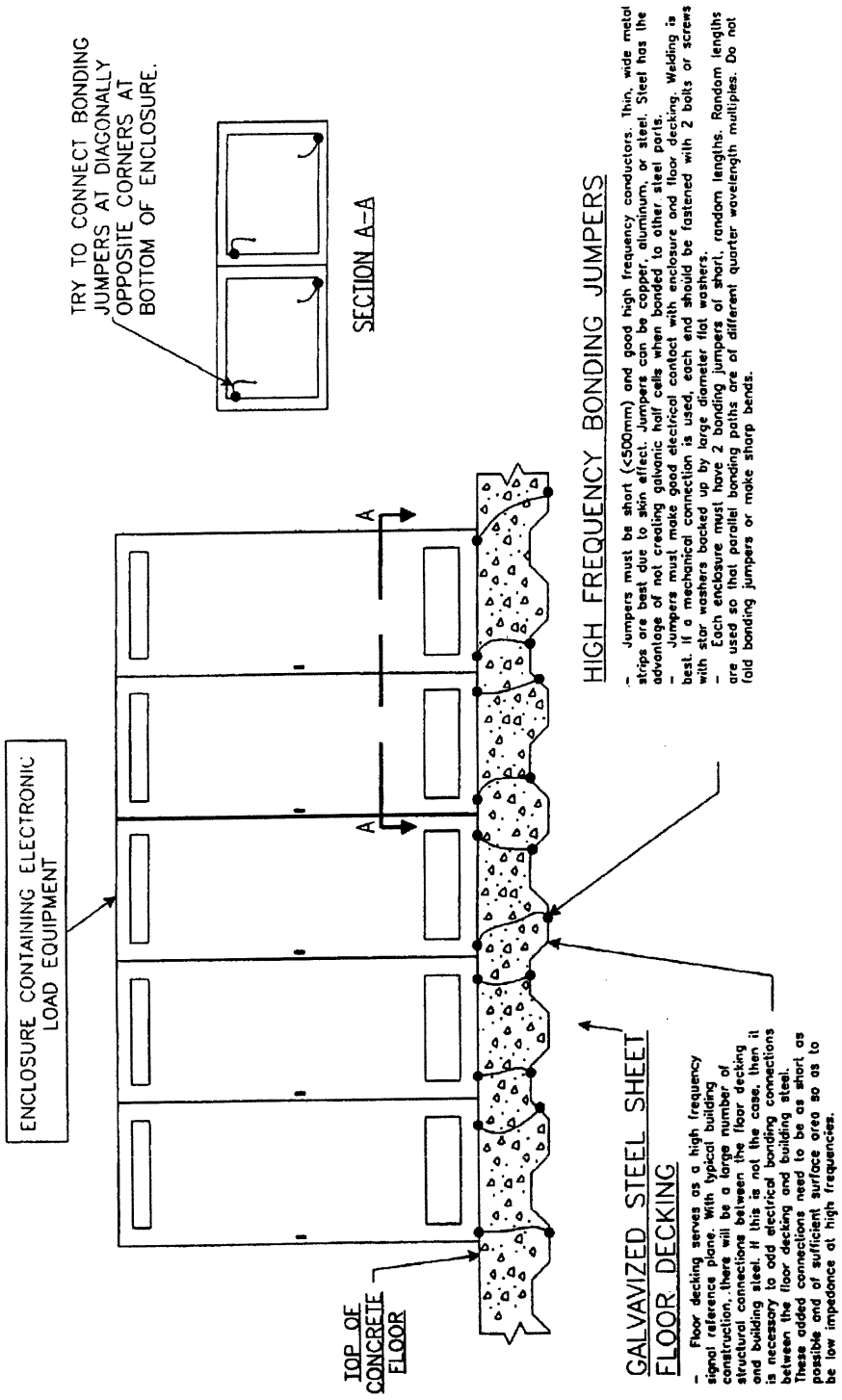

Figure 8-19—Signal reference plane utilizing galvanized steel sheet floor decking

Copyright © 1999 IEEE. All rights reserved.

Copyright by the Institute Of Electrical & Electronics Engineers Inc
Fri Jul 20 10:38:51 2001

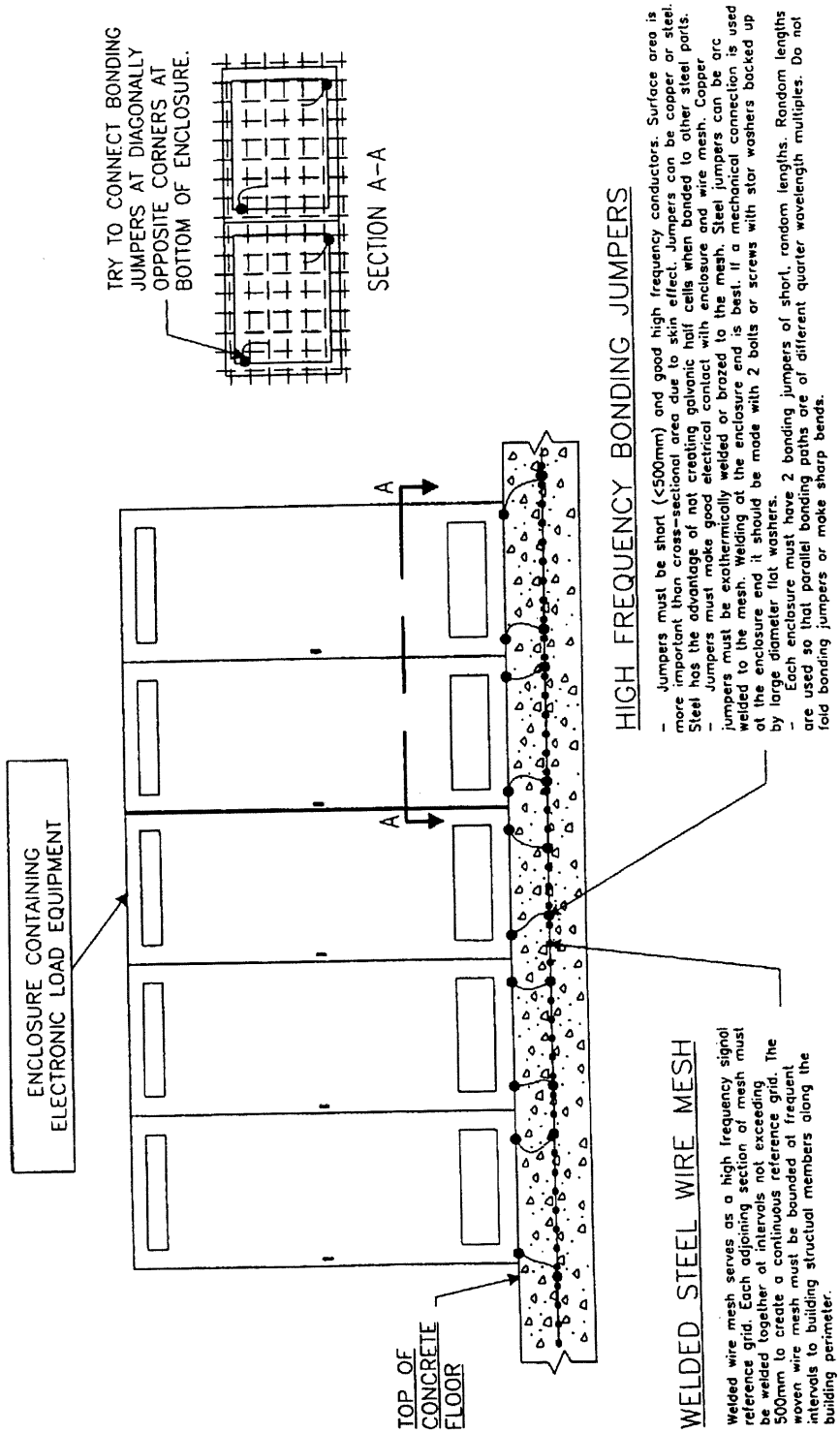

Figure 8-20—Signal reference grid utilizing welded steel wire mesh

Copyright © 1999 IEEE. All rights reserved.

Copyright by the Institute Of Electrical & Electronics Engineers Inc
Fri Jul 20 10:38:52 2001

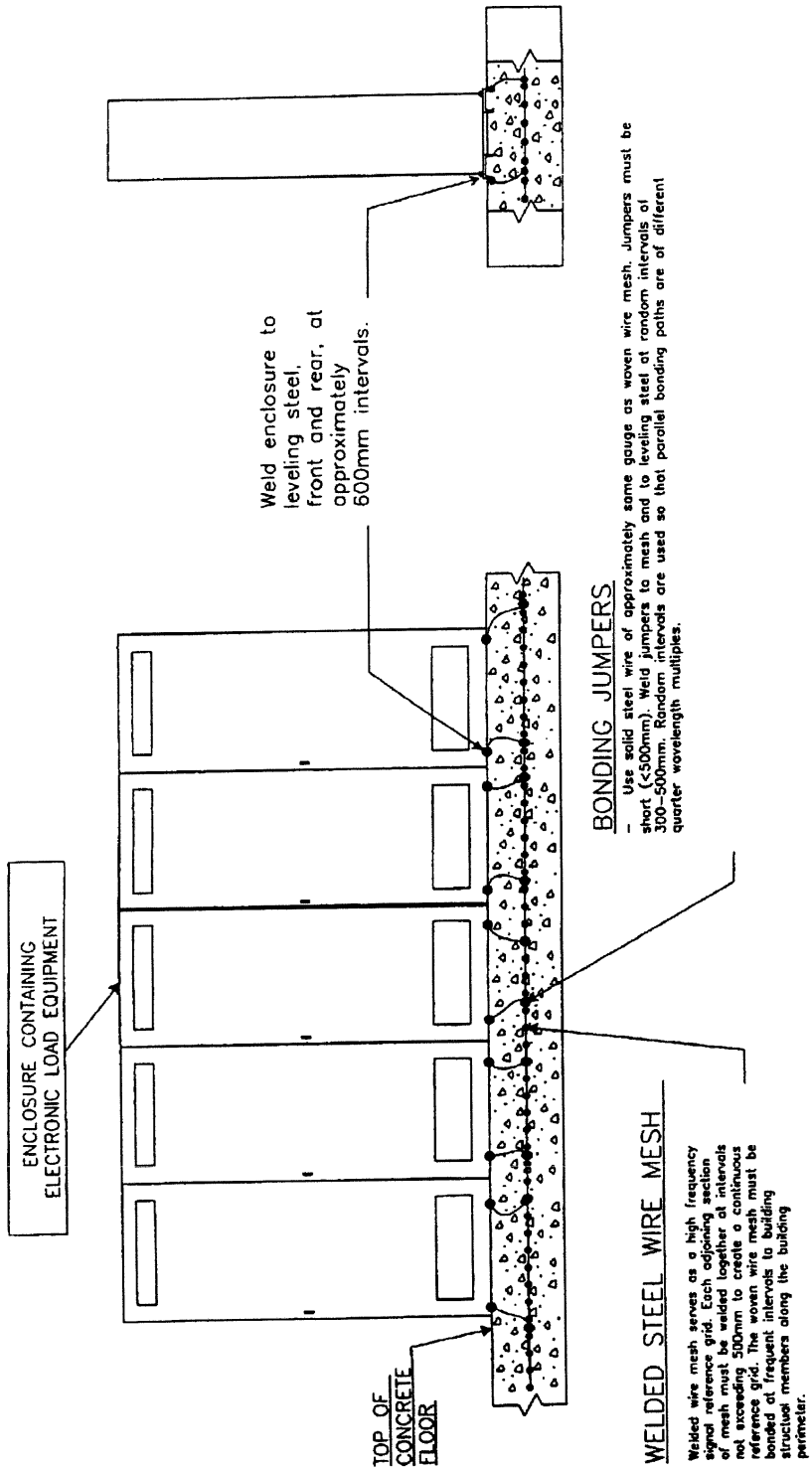

Figure 8-21—Signal reference grid utilizing welded steel wire mesh (with embedded leveling steel)

Copyright © 1999 IEEE. All rights reserved.

Copyright by the Institute Of Electrical & Electronics Engineers Inc
Fri Jul 20 10:38:53 2001

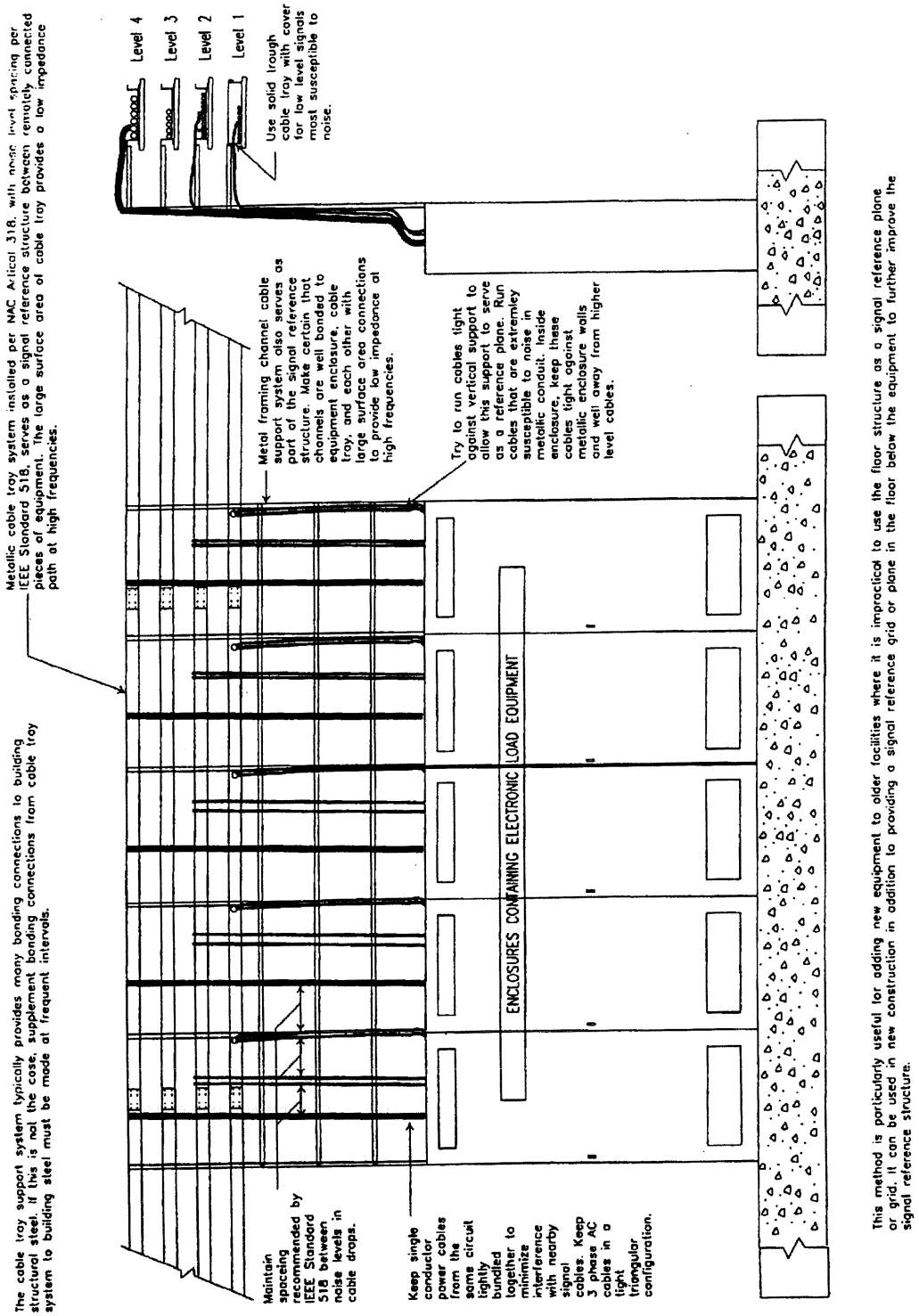

Figure 8-22—Signal reference structure utilizing metallic cable tray

Copyright © 1999 IEEE. All rights reserved.

Copyright by the Institute Of Electrical & Electronics Engineers Inc
Fri Jul 20 10:38:53 2001

8.5.4.2 Flat strip signal reference grid

Several manufacturers supply a signal reference grid based on flat copper strips welded or brazed at the crossovers (see Figure 8-23). These signal reference grids can be prefabricated or field assembled and generally do not require routine maintenance. This style of grid lays directly on the subfloor that supports the raised flooring. Power and data cables lay on the grid. The advantage of this geometry is that, due to decreased open loop area, the coupling of radiated energy from far-field phenomena into the cables is minimized when they are very close to the copper strips that form the signal reference grid (see Morrison and Lewis [B6]). The higher capacitance between the cables and the signal reference grid also increases the protected circuit's noise immunity to electric fields. Minimum spacing between the cables and the signal reference grid also reduces susceptibility to magnetic fields. Both of these are near-field effects. A possible disadvantage of this form of signal reference grid is the requirement for longer bonding straps as compared to the raised-floor-based signal reference grid. Two bonding straps (of different lengths) to each piece of equipment substantially reduces the impedance of the strap.

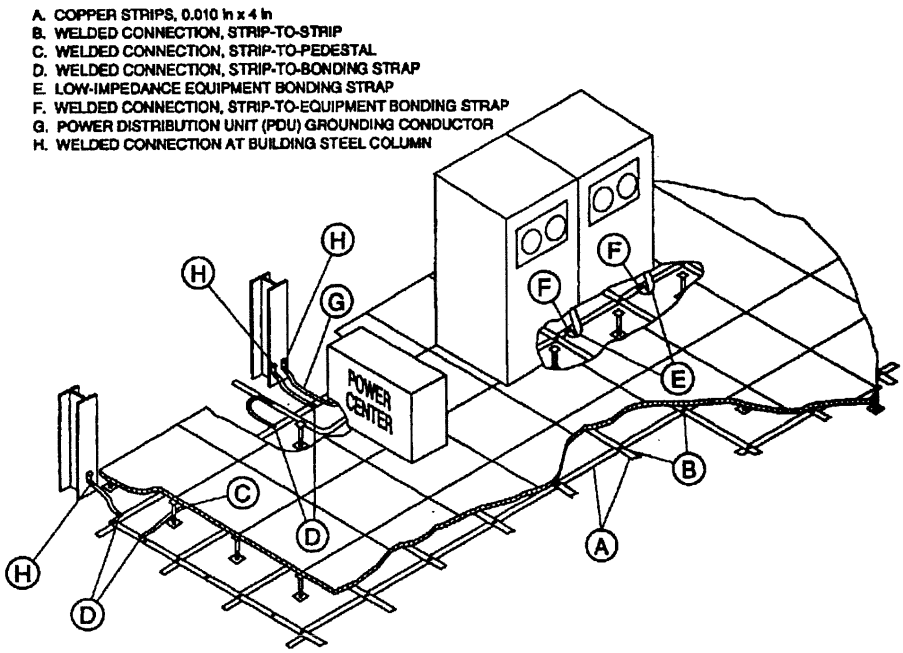

Figure 8-23—Signal reference grid fabricated from copper strips

8.5.4.3 Round-wire signal reference grid

A signal reference grid may also be economically fabricated from standard, bare round wire joined together via welding, brazing, compression, or a suitable grounding clamp arrangement at each of the crossing points. Typically, #6 AWG to #2 AWG copper wire is used. Aluminum wire may also be used if its connections are properly prepared. This special form of

Copyright © 1999 IEEE. All rights reserved.

Copyright by the Institute Of Electrical & Electronics Engineers Inc
Fri Jul 20 10:38:54 2001

signal reference grid may be installed directly atop the structural subfloor, or may be attached to the pedestal post of the raised flooring using special ground clamps. These ground clamps may be attached near the top of the pedestal just below the underside of the removable floor tile in order to minimize the length of the equipment bonding strap. The use of common available bare wire with easy to install grounding clamps may offer an excellent option in retrofit applications.

8.5.4.4 Raised flooring understructure signal reference grid

Where available, a simple, low-cost, and often effective signal reference grid is the bolted-metal stringer understructure of the typical 0.6 m × 0.6 m (2 ft × 2 ft) square raised flooring system (see Figure 8-24). Bolts connecting the stringers at each pedestal should be maintained tight and corrosion free if the arrangement is to be effective. Initially, typical joint resistances of 500 μΩ can be obtained by proper torquing of these bolts but the integrity of these connections should be expected to diminish over time without periodic maintenance. Raised flooring with no stringers, lay-in stringers, or snap-in stringers are not recommended for use as a signal reference grid.

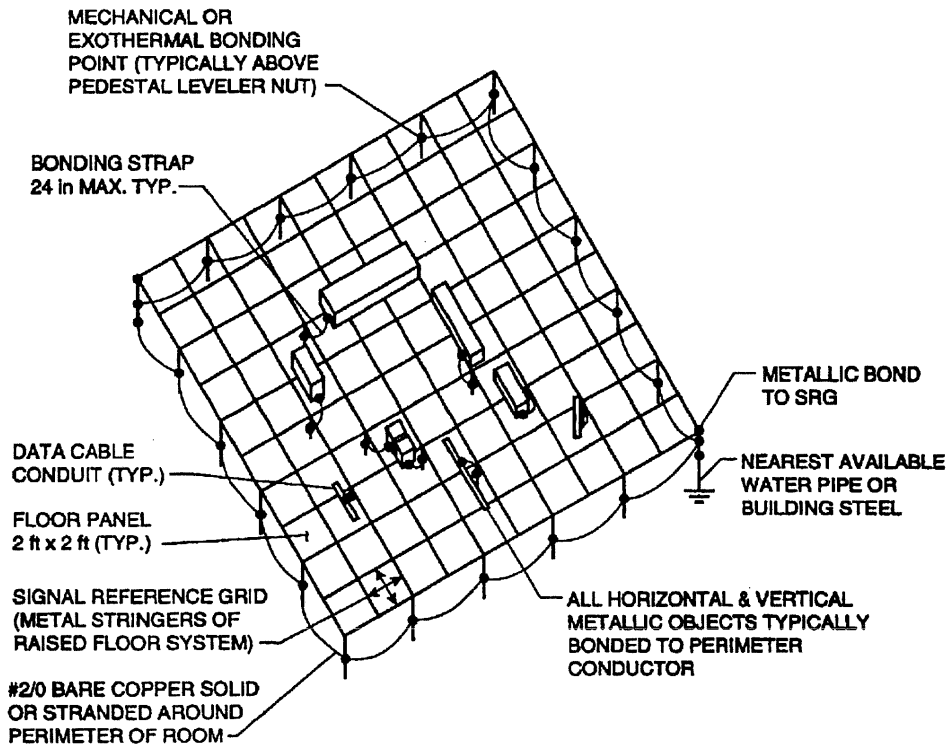

Figure 8-24—Raised access flooring substructure as signal reference grid

Electrical safety requirements of the NEC dictate that the signal reference grid be connected to any associated equipment grounding conductors. Performance requirements dictate that the signal reference grid be effectively bonded to the associated electrical and electronic

Copyright © 1999 IEEE. All rights reserved.

Copyright by the Institute Of Electrical & Electronics Engineers Inc
Fri Jul 20 10:38:55 2001

equipment. There is no requirement by the NEC to connect the signal reference grid to any form of earth ground electrode connection, since it will be grounded effectively by the bonding to associated equipment grounding conductors. Such a connection (although permitted by the NEC) has no direct relationship to improved system performance of electronic load equipment. In fact, an inadequately engineered earth ground connection may produce unwanted results during transient events. Grounding of the signal reference grid can be accomplished using two different methods depending on the installation type, the load equipment type, the signal frequency of interest, and the qualifications of the people maintaining the system. The signal reference grid can be grounded using single-point grounding or multipoint grounding.

8.5.4.5 Single-point and multipoint grounding

The determination to use single-point grounding or multipoint grounding typically depends on the frequency range of interest. Analog circuits with signal frequencies up to 300 kHz may be candidates for single-point grounding. Digital circuits with signal frequencies in the Mhz range should utilize multipoint grounding.

Single-point grounding is not easily implemented for SRSs since these structures depend upon a multiplicity of connections. Single-point grounding is usually implemented with a physical bus or bulkhead form of construction where all conductors are connected (to a lower common impedance) prior to entering or leaving the signal reference grid area. A potential violation is to have a single-point ground area where one additional grounding connection occurs at a remote point within the electronic load equipment normally designed to be grounded only at one point. Such a connection may be intentional or unintentional. This configuration would then provide a well-defined and concentrated current path through the electronic load equipment, which could cause performance problems or component damage.

Single-point grounding is often required for stored program-controlled electronic load equipment used for telecommunications and analog signal systems. Typically, these systems are located in controlled areas where the grounding topologies are carefully designed and maintained. A prime example is the public telephone network. Single-point grounding is often confused with the term "ground window." Single-point grounding is only the accomplishment of grounding electronic load equipment to a predetermined single point. The electronic load equipment need not be isolated from other intentional or unintentional grounds. However, if the electronic load equipment is designed to be grounded only at one point, then the ground window comes into relevance. For the ground window application, the electronic load equipment is isolated from all other grounds and all grounding conductors entering into the electronic load equipment area shall be connected within a small area (window) to an effectively grounded bus. The electronic load equipment is then effectively single-point grounded from the perspective of all entering grounding conductors. For more information, see Chapter 9.

Recommended practice for signal reference grids is multipoint grounding. Multipoint grounding requires that all metallic objects crossing or intersecting the signal reference grid are effectively bonded to it. Multipoint grounding of the signal reference grid also minimizes the opportunity for all types of electrical currents flowing in the signal reference grid to be

 Copyright © 1999 IEEE. All rights reserved.

Copyright by the Institute Of Electrical & Electronics Engineers Inc
Fri Jul 20 10:38:56 2001

unwantedly concentrated onto a few conductors of the signal reference grid (this controls near-field conditions and potential difference as well). This set of recommendations also minimizes the opportunity for unwanted lightning side-flash occurrences and includes all building steel and other conducting paths within 1.8 m (6 ft) of the signal reference grid.

Existing concrete-encased steel is considered to be inaccessible, so no connections between the signal reference grid and this steel are required. In new construction, concrete-encased steel should be provided with access terminals, which may then be bonded to the signal reference grid.

8.5.4.6 Connection of equipment to the signal reference grid

All equipment, especially electronic load equipment, should be connected to the signal reference grid with low-inductance bonding straps or jumpers. Flat foil strips, which are relatively wide in relation to length, are the recommended practice. Connections to the equipment frame or an OEM supplied grounding terminal are critical. Paint or other surface contact inhibitors should be removed before bonding straps are directly attached to metal enclosures or cabinet surfaces Subsequently, the connections should be properly treated to inhibit rust, corrosion, and moisture.

Grounding straps should be as short as practicable to minimize inductive reactance in the path. The use of at least two bonds widely spaced apart on the same item of equipment is recommended to further reduce reactance of the grounding path. These straps should be of different lengths such that they will have different self-resonant frequencies quarter wavelength multiples. The straps should never be folded or coiled, nor bent into curves with radii of less than eight inches for best performance. Even in equipment lineups where the equipment is bolted together, the recommended practice is to bond each enclosure to the signal reference grid with its own strap, or two if practical.

8.5.4.7 SRS for noncontiguous areas

The signal reference grid or signal reference plane is appropriate for a single two-dimensional area and nearby contiguous areas, but is impractical and not as effective between widely separated areas or buildings. Recommended practice is to augment the circuits with surge protective devices. Other methods (e.g., optical isolators or suitable wide-band common-mode current filters) can also provide increased noise and surge immunity for the interconnected telecommunication, data, and signal circuits.

8.5.4.8 Summary of recommended practices for installation of signal reference grids

a) Follow the NEC and other related applicable codes and standards for safe grounding. There is no conflict between safe grounding for people and effective higher-frequency grounding for electrical systems and their associated electronic equipment.

b) Select a suitable signal reference grid approach and assure that it is engineered, installed, and maintained properly.

Copyright © 1999 IEEE. All rights reserved.

Copyright by the Institute Of Electrical & Electronics Engineers Inc
Fri Jul 20 10:38:57 2001

c) Permanently and effectively bond the signal reference grid to all accessible building steel and to each metallic path (e.g., conduits, raceways, cable trays, pipes, and ducts) that cross into the signal reference grid in any plane, or within 1.8 m (6 ft) of the signal reference grid.

d) If a single point of entry for power, grounding cables, and other metallic items into the space exists (e.g., physical ground window or bulkhead), then single-point grounding of the signal reference grid is acceptable. The electronic load equipment installed on the signal reference grid may be either multipoint grounded or single-point grounded to the signal reference grid, depending on the signal frequency of interest.

e) Bond the signal reference grid to each piece of electronic equipment and to any other electrical or mechanical equipment located on the signal reference grid.

f) Bonding connections to the signal reference grid should be as short as practical with no sharp folds or bends. Flexible straps are preferred to the use of round conductors.

g) Where in accordance with manufacturer requirements, more than one bonding conductor for each piece of equipment should be used. These conductors should be connected to opposing corners of the equipment and to the nearest, but separate points on the signal reference grid. These conductors should be of different lengths.

h) Electronic equipment should not be installed nearest to the outer edges of the signal reference grid if at all practicable. Instead, this equipment should be installed one or more signal reference grid conductor intersections towards the center of the signal reference grid in order to minimize the problems of unwanted current concentration into too few signal reference grid conductors (this is not a concern with signal reference plane construction). Heating, ventilation, and air conditioning equipment and panelboards should be connected to any signal reference grid conductor, or to the outermost grid conductor. Where feasible, critical equipment should be located and bonded to the signal reference grid greater than 1.8 m (6 ft) away from building steel or other potential lightning current or sideflash paths.

i) All separately derived systems serving equipment located on the signal reference grid should have their power grounding point (i.e., neutral-to-ground bond) connected to the signal reference grid by a suitable bonding strap. This connection is in addition to the required connection of the grounding electrode conductor to the grounding electrode.

j) All heating, ventilation, and air conditioning equipment, its associated piping, panelboards, switchboards, transformers, and similar electrical or mechanical equipment within the protected area, should be bonded to the signal reference grid.

k) No special or supplementary grounding connections should be made to remote or dedicated earth grounding points, nor should there be any similar attempt to provide any form of separate earth ground paths to or from the signal reference grid or any equipment installed upon it.

l) All interconnecting communications, data, and power cables should lay on or very close to the signal reference grid.

 Copyright © 1999 IEEE. All rights reserved.

Copyright by the Institute Of Electrical & Electronics Engineers Inc
Fri Jul 20 10:38:58 2001

m) Construction documentation should be complete in all details, including the proper grounding and bonding of heating, ventilation, and air conditioning equipment, piping; raceways; and similar items. The engineer preparing the documentation should not expect installers to complete the design.

8.6 Lightning/surge protection considerations

NFPA 780-1997 provides both an isokeraunic map of thunderstorm days and a risk index calculation procedure. This procedure provides background data for risk decisions regarding lightning protection. Based upon the nature of the equipment to be protected, its high cost of repair or replacement, and general value to operations, a lightning protection program strictly modeled on NFPA 780-1997 is advisable for most sites. In general, only lightning protection components listed UL 96-1998 should be used. Recommended practice is that the lightning protection system be installed in strict conformance with UL 96A-1982. A structure or building so equipped may be master labeled for structural lightning protection by an NRTL, and should be so labeled as evidence of proper protection. UL 96A-1982 provides for reconditioning of existing installations previously conforming to the standard's requirements. This procedure should be followed to maintain the labeled status of the installation.

Air terminals are recommended to be treated in similar fashion as the buried ring-ground and as any earth grounding electrode (see the NEC, and NFPA 780-1997). Interconnection of the air terminals with the overall premises grounding system is recommended practice, which assists in minimizing potential differences, destructive arcing, and the associated problems of common-mode electrical-noise currents appearing via the grounding system. It is recommended practice that facilities housing electronic load equipment be installed with an NFPA 780-1997 lightning protection system. In addition to basic structural lightning protection means, installation of a listed secondary surge arrester is recommended at the service entrance of all major electronic equipment facilities. In addition, a listed and properly rated surge protective device should be applied to each individual or set of electrical conductors (e.g., power, voice, and data) penetrating any of the six sides forming a structure. All power-circuit surge protective devices should be coordinated per IEEE Std C62.45-1992. All signal-circuit surge protective devices (primary and secondary surge protectors) should be coordinated per UL 497-1996, and UL 497A-1998.

Large transients on the power system originating outside of the user's facility, associated with lightning or major power-system events, are best initially diverted at the service entrance of a facility. While such protection might not be mandated by codes at present, trends indicate that a growing number of standards, guidelines, and application documents support a recommendation for this protection. Transients generated within the premises can best be diverted by surge protective devices located close to the internal source of the transients, or close to the electronic load equipment if this is not possible. Best results are obtained if both locations are protected. This possibility of multiple location protection raises the issue of coordination of cascaded devices, an emerging concern in the application of surge protective devices in the power system of end-user facilities (see Lai et al. [B2]).

Copyright © 1999 IEEE. All rights reserved.

Copyright by the Institute Of Electrical & Electronics Engineers Inc
Fri Jul 20 10:38:59 2001

8.6.1 Selection

The selection of surge protective devices typically depends on the location of the device. The surge protective devices are recommended to be sized per IEEE Std C62.41-1991 and IEEE Std C62.45-1992 requirements to achieve proper coordination. Surge protective devices should be listed to UL 1449-1996. Surge protective devices used for three-phase, four-wire circuits are generally recommended to be connected in all combinations of line-to-line, line-to-neutral, line-to-ground, and neutral-to-ground. Surge protective devices for three-phase, three-wire circuits are recommended to be attached in both the line-to-line and line-to-ground modes. Surge protective devices may also be specified with high-frequency filtering characteristics. Care should be taken to ensure that this filtering does not adversely affect the operation of the power line carrier.

8.6.2 Installation

Surge protective devices may not perform properly under field conditions of use unless installed in a correct manner. Recommended surge protective device installation practice is for all lead lengths to be short and shaped to minimize open loop geometry between the various conductors. This is accomplished by removing excess and unneeded lead lengths to the surge protective devices; by twisting all the phase, neutral, and equipment grounding conductors together; and by avoiding any sharp bends and coils in the conductors. IEEE Std C62.41-1991 and UL 1449-1996 should be used as standard means of verifying performance of surge protective devices.

8.6.3 Service entrance surge protection

Facilities housing electronic load equipment of any type should have service entrances equipped with effective lightning protection in the form of listed Category "C" surge protective devices, as specified in IEEE Std C62.41-1991. Care should be taken to assure that the method used for the installation of surge protective device equipment does not cause a degradation of its current-diverting and voltage-clamping abilities.

8.6.4 Premise electrical system surge protection

In addition to surge protective devices installed in the service entrance equipment, it is recommended that additional surge protective devices of listed Category "B" or Category "A," as specified in IEEE Std C62.41-1991, be applied to downstream electrical switchboards and panelboards, and panelboards on the secondary of separately derived systems if they support communications, information technology equipment, signaling, television, or other form of electronic load equipment (see Figure 8-25).

8.6.5 UPS system surge protection

Lightning and other transient voltage and current-producing phenomena are harmful to most UPS equipment and to its served electronic load equipment. For example, the transient may reach the critical load via an unwanted activation of an unprotected static-switch bypass path around a UPS. Therefore, it is recommended practice that both the input circuit to the UPS

 Copyright © 1999 IEEE. All rights reserved.

Copyright by the Institute Of Electrical & Electronics Engineers Inc
Fri Jul 20 10:39:01 2001

and the associated UPS bypass circuits (including the manual maintenance bypass circuit) be equipped with effective Category "B" surge protective device, as specified in IEEE Std C62.41-1991. Low-inductance connections should be employed for this protection.

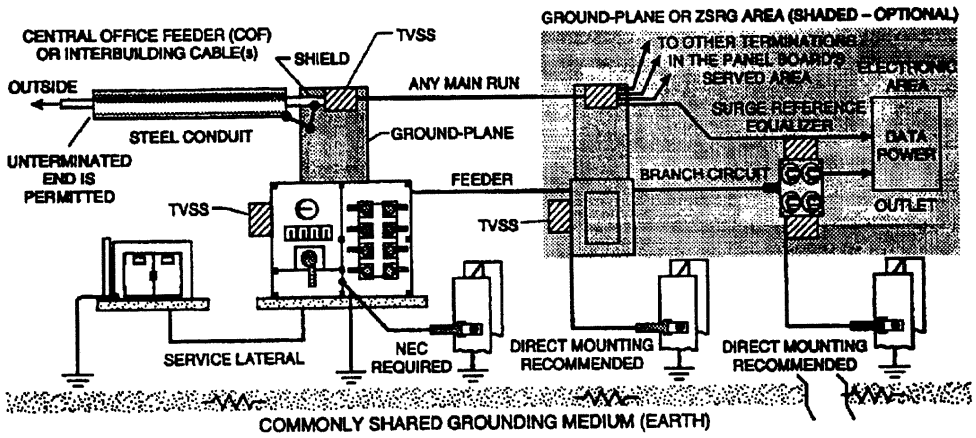

Figure 8-25—Typical locations of power distribution surge protective devices

8.6.6 Data/communication/telecommunication systems surge protection

Electronic equipment containing both ac power and metallic data cabling should also be properly protected via surge protective devices on both the ac power and data cables. More details on the application and installation of surge protective devices for data/telecommunications systems are discussed in Chapter 9.

8.6.7 Surge reference equalizers

With the expanding use of smart electronics that have a power port connection as well as a communications port connection (telephone answering machines, fax, desktop publishing, industrial process control, remote terminals, etc.), another risk of damage has been identified. Surge protection might have been provided on both the power line and the communications line, yet the equipment could be damaged by a difference of reference voltages developed during a surge event. One problem scenario involves the voltage difference between the two chassis (and thus the signal reference) of subunits powered from different branch circuits, where a surge protective device operation changes the voltage with respect to the equipment grounding conductor of one subunit (see Figure 8-26) (see Martzloff [B5]). The other scenario involves the difference of voltage resulting from the operation of a surge protective device at one of the entrances of the power or communications lines (see Figure 8-27).

Copyright © 1999 IEEE. All rights reserved.

Copyright by the Institute Of Electrical & Electronics Engineers Inc
Fri Jul 20 10:39:03 2001

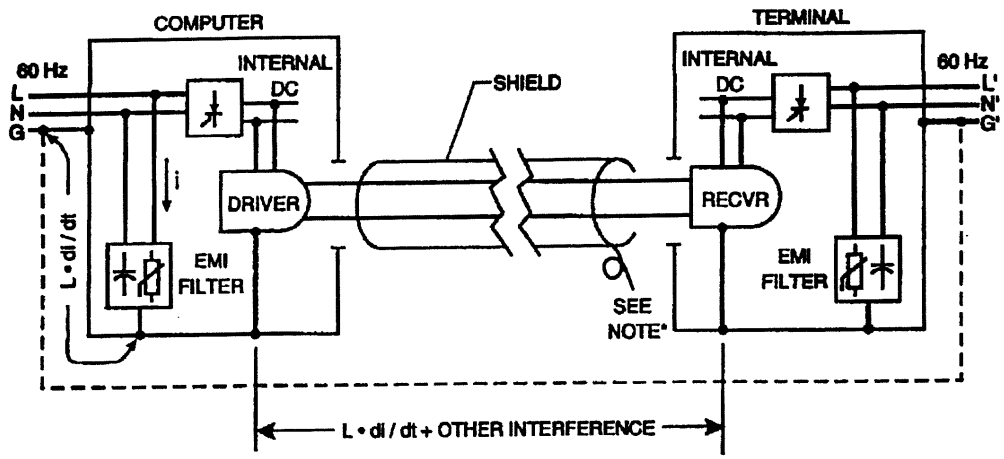

NOTE: Some organizations insist on grounding one end only of the shield.

Figure 8-26—Signal reference potential difference created by diverting transient energy through grounding conductor of portion of system

In both cases, what is happening is that one surge protection device is diverting surge current into its local ground, while the other circuit is still unaffected. This alters the potential only at the circuit where this current injection occurs, and the intervening wiring is then called upon to transport a potential equalizing surge current across its length. Note however, that if the path represents an electrical length much more than about 1/20th of a wavelength in comparison to the surge current's highest frequency, there is no possibility that any equalization of potential will actually occur, but the surge current impulse will still flow (and most likely reflect back-and-forth or "ring") between the cable's ends.

One solution for this type of problem is to install an optical isolation means into the existing metallic path, or ultimately an overall fiber-optic data link rather than a metallic connection. When this approach is not practical, the fallback position is again to install a coordinated ac power and data surge protective device unit at the end of the circuit to be protected. Best results are again achieved via an OEM combination ac power and data surge protective device assembly. These are dual purpose devices intended to mitigate the threats associated with surges carried by the conductors of either, or both, the power system and the communications system, as well as differences in reference voltages between the two systems.

The dual purpose surge protective device is installed next to the equipment to be protected and combines the protective function of both systems in the same enclosure so that the same ground reference may be used for both circuits. The device is either field-wired into place or plugged into a branch circuit receptacle near the equipment to be protected. Next, the communications system wires (telephone or data link) or the coaxial cable is routed in and out of the unit. Finally, the common, single grounding connection contained within the dual purpose surge protective device unit equalizes the voltages of the two circuits.

Copyright © 1999 IEEE. All rights reserved.

Copyright by the Institute Of Electrical & Electronics Engineers Inc
Fri Jul 20 10:39:04 2001

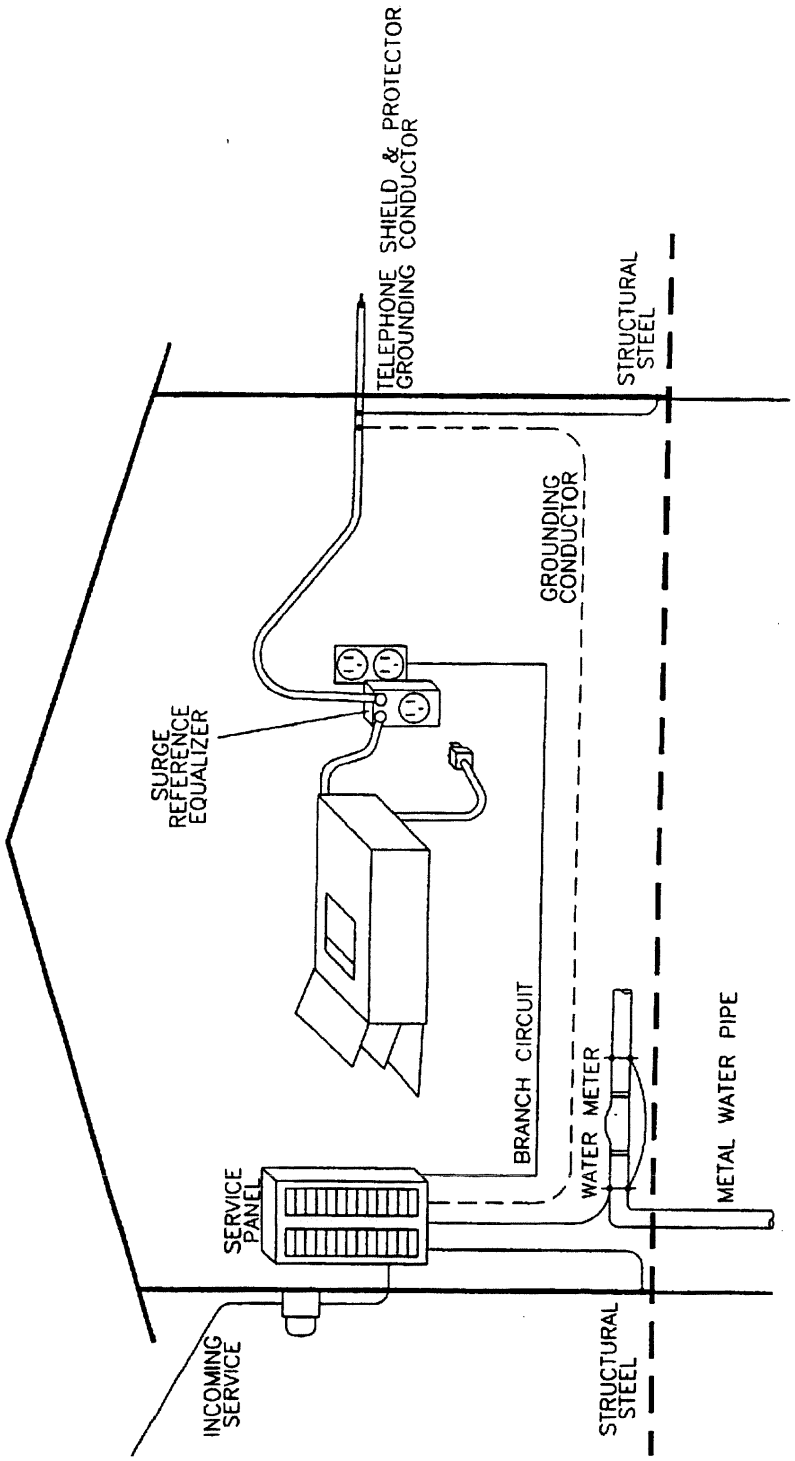

Figure 8-27—Protection against reference voltage difference caused by two-port connection

Copyright © 1999 IEEE. All rights reserved.

Copyright by the Institute Of Electrical & Electronics Engineers Inc
Fri Jul 20 10:39:05 2001

8.6.8 Exterior building systems and piping lightning/surge protection

All exterior mechanical system items (e.g., cooling towers, fans, blowers, compressors, pumps, and motors) that are in an area not effectively protected by a lightning protection system per NFPA 780-1997 should be considered as targets for a lightning strike. Therefore, it is recommended practice to individually provide surge protective device protection on both the power input and data circuits connected to all such equipment. For ac power circuits, the surge protective device should be Category "B" or "C" devices (as specified in IEEE C62.41-1991), depending on building location and system reliability requirements. Any metal pipe or conduit (exposed conductor) that runs externally to the building and then also extends back into the building (especially if the extension is into an electronic load equipment area, such as the piping for heating, ventilation, and air conditioning) has a possibility of the external portion of the item being directly struck by lightning. It is capable of carrying a lightning voltage and current back into the building and arc, i.e., side-flash, from the energized item to other grounded items. This concern is real from both an equipment damage and shock and fire hazard standpoint.

Therefore, all such metallic items should be grounded to the building steel as they pass in/out of the building. Bonding of all such pipes, electrical conduits, and similar items into a single electrically conductive mass is very important. If nearby building steel is not available, all items should be bonded to the local electrical equipment grounding system and, if available, to the lightning ring ground via a down-conductor system generally installed as a lightning conductor per NFPA 780-1997.

8.7 380–480 Hz systems

Certain electronic loads require 380–480 Hz power, nominally 400 or 415 Hz. The design of 415 Hz power systems requires additional considerations beyond those for 60 Hz power. The 415 Hz power is on-site generated or converted from a 60 Hz supply by an engine-alternator/generator, a motor-alternator/generator set, or solid-state frequency converters. Since these supplies are generally not solidly interconnected to a 60 Hz ac system, they are treated as separately derived systems.

8.7.1 Recommended location of the 415 Hz ac system

It is recommended that 415 Hz systems be located near their served loads because of concerns over common-mode noise currents and 415 Hz wiring voltage drops. In addition, it is recommended that 415 Hz sources be located on (and bonded to) the same SRS as the related 60 Hz ac system and their served loads.

8.7.2 General grounding and shielding of 415 Hz systems

Generally, on 415 Hz ac systems (most of which are three-phase), the neutral point of the ac supply should be solidly grounded in accordance with applicable codes and standards. This design allows for proper return current paths for any LC filters in the load equipment and for system ground faults. Grounding and bonding practices for 415 Hz systems and equipment

Copyright © 1999 IEEE. All rights reserved.

Copyright by the Institute Of Electrical & Electronics Engineers Inc
Fri Jul 20 10:39:05 2001

are essentially the same as for the 60 Hz systems and equipment, with the sole exception of not being able to make 415 Hz ac supplies solidly interconnected systems with respect to their 60 Hz supply.

8.7.3 Controlling 415 Hz wiring losses

Wiring conductors exhibit significantly greater inductive reactance and ac resistance (skin effect) at 415 Hz than at 60 Hz. Typical wiring impedances at 415 Hz for single copper conductors are shown in Table 8-1. Nonferrous metallic raceway is recommended for 415 Hz conductors, which significantly reduces the losses resulting from ferrous metal conduit/raceway. Aluminum conduit/raceway is generally recommended practice. Nonmetallic raceways should not be used due to their lack of electrostatic shielding.

Table 8-1—415 Hz impedance in ohms per 100 ft (single copper conductors)

Wire size (AWG)	In air			Nonmetallic conduit			Rigid aluminum conduit			Rigid steel conduit		
	Rac	X1	Z	Rac	X1	Z	Rac	X1	Z	Rac	X1	Z
8	0.0782	0.0267	0.0826	0.0782	0.0321	0.0845	0.0782	0.0321	0.0845	0.0784	0.0401	0.0880
6	0.0493	0.0258	0.0556	0.0493	0.0310	0.0582	0.0493	0.0310	0.0582	0.0497	0.0387	0.0630
4	0.0315	0.0248	0.0401	0.0315	0.0297	0.0433	0.0315	0.0297	0.0433	0.0322	0.0371	0.0492
2	0.0198	0.0235	0.0307	0.0198	0.0284	0.0346	0.0198	0.0284	0.0346	0.0202	0.0354	0.0408
1	0.0164	0.0232	0.0284	0.0164	0.0279	0.0324	0.0164	0.0279	0.0324	0.0175	0.0348	0.0390
1/0	0.0135	0.0229	0.0266	0.0135	0.0275	0.0307	0.0135	0.0275	0.0307	0.0152	0.0344	0.0376
2/0	0.0115	0.0224	0.0252	0.0115	0.0269	0.0293	0.0115	0.0269	0.0293	0.0135	0.0336	0.0362
3/0	0.0097	0.0220	0.0240	0.0097	0.0264	0.0281	0.0097	0.0264	0.0281	0.0118	0.0330	0.0350
4/0	0.0084	0.0218	0.0233	0.0084	0.0261	0.0274	0.0084	0.0261	0.0274	0.0110	0.0328	0.0346
250 kcmil	0.0076	0.0217	0.0230	0.0076	0.0260	0.0271	0.0076	0.0260	0.0271	0.0101	0.0325	0.0340
300 kcmil	0.0070	0.0212	0.0223	0.0070	0.0255	0.0265	0.0070	0.0255	0.0265	0.0097	0.0319	0.0333
350 kcmil	0.0064	0.0212	0.0221	0.0064	0.0254	0.0262	0.0064	0.0254	0.0262	0.0093	0.0318	0.0331
400 kcmil	0.0061	0.0211	0.0219	0.0061	0.0253	0.0260	0.0061	0.0253	0.0260	0.0091	0.0315	0.0328
500 kcmil	0.0054	0.0206	0.0213	0.0054	0.0248	0.0253	0.0054	0.0248	0.0253	0.0084	0.0310	0.0321

Copyright © 1999 IEEE. All rights reserved.

Copyright by the Institute Of Electrical & Electronics Engineers Inc
Fri Jul 20 10:39:06 2001

If 415 Hz power is provided to loads over distances more than a few tens of feet, wire size and geometry (such as concentric lay, and twisting) as well as line drop compensators should be evaluated for controlling voltage losses. Increasing wire size above #1/0 AWG does not offer significant reductions of wiring impedance. The use of paralleled conductors and separate paralleled feeders can be effective for reducing wiring impedance. When using paralleled conductors per phase and neutral as a means of controlling voltage drop in 415 Hz feeders or branch circuits, the paralleled conductors are better carried in separate conduits or raceways, which are made up as mirror (identical) images of one another. Paralleled, separate conduit/raceways effectively reduce the ac resistance and inductance of the 415 Hz circuits. The use of parallel conductors per phase and neutral in the same conduit or raceway reduces the ac resistance but not the inductive reactance (which is the dominant component of the wiring impedance at 415 Hz).

8.7.4 415 Hz line-drop compensators

Passive or active line-drop compensators are often applied to 415 Hz circuits as a means of reducing wiring voltage drop and improving the voltage regulation on the circuit. Passive line-drop compensators provide capacitive reactance to cancel the wiring inductive reactance. Passive line-drop compensators exhibit unwanted frequency-dependent characteristics that reduce their effectiveness with harmonic-rich load currents. Passive line-drop compensators should be properly located in the circuit to be effective. The location of the passive line-drop compensator can be anywhere along the circuit where its inductive reactance is desired to be canceled. For example, with a line feeder connected to a group of short branch circuits, the line-drop compensator can be placed anywhere along the feeder ahead of the point where the split is made to the branch circuits. When a short feeder is used with several long branch circuits, it is best to apply individual line-drop compensators to each of the branch circuits and not on the shared feeder. Thus, if a branch circuit is switched on/off it has minimal effect on the system voltage.

Active line-drop compensators regulate the source output voltage in response to a remote voltage sensing point (such as near the load) or in proportion to the load current. OEM with 415 Hz converters are generally the suppliers of line-drop compensators that are matched to the product and application to ensure compatibility. It is recommended that line-drop compensators be used only if voltage drop cannot otherwise be practically controlled by locating the 415 Hz source close to the loads or through the use of parallel conductors. Regulation correction time-constant interaction between the line-drop compensator and its load may produce voltage instability due to regulation null hunting. This is avoided if the time constant of both the load and the active line-drop compensator have been coordinated. This is one reason why the OEM often supply this equipment.

8.7.5 415 Hz conductor ampacity

The current-carrying capability of a given conductor is less at 415 Hz than at 60 Hz due to additional stray losses (primarily skin effect, but eddy losses also exist). The derating factor for 415 Hz conductor ampacity, based on the 60 Hz conductor ampacity, is as follows:

 Copyright © 1999 IEEE. All rights reserved.

Copyright by the Institute Of Electrical & Electronics Engineers Inc
Fri Jul 20 10:39:07 2001

$$\text{derating factor} = \sqrt{\frac{1}{R_{ac}/R_{dc}}} \tag{8-1}$$

where

R_{ac} is the ac resistance of the conductor at 415 Hz,

R_{dc} is the dc resistance of the conductor.

When more than three current-carrying conductors are installed within the same raceway, most applicable codes and standards require that ampacity derating factors be applied. For most applications this factor is 80% of the ampacity resulting from Equation (8-1). Further reductions may be required for ambient temperature and total number of wires sharing the same raceway.

8.7.6 Component derating at 415 Hz

When 60 Hz components are used in 415 Hz applications, component derating is often required. Selecting components for 415 Hz applications is difficult because no national standards exist for electrical items to be tested and listed at 415 Hz. Manufacturers should be contacted for application assistance. Overcurrent protective devices may require special derating at 415 Hz. Fuses are typically not appreciably affected by 415 Hz power since they are principally resistive, but thermal-magnetic and magnetic-only circuit breakers are affected. When circuit breakers are used at 415 Hz, they should be sized for the expected load using the derating factors supplied by the OEM. Circuit breakers of 60 Hz generally do not possess the same trip-calibration curve nor interrupting capacity at 415 Hz as at 60 Hz. Once a 60 Hz circuit breaker is applied to the 415 Hz system and is derated, the OEM embossed or the permanent label for 60 Hz ampacity may still be visible. This incorrect label is confusing and may cause problems. Increased attention to field-applied labels and advisory signs is recommended as well as a specific ruling from the local electrical safety inspection authority having jurisdiction at the location. Where possible, components should be used that bear the OEM's 415 Hz ratings.

8.8 References

This recommended practice shall be used in conjunction with the following publications. When the following standards are superseded by an approved revision, the revision shall apply.

EIA/TIA 571-1991, Environmental Considerations for Telephone Terminals.[3]

FIPS Pub 94-1983, Guideline on Electrical Power for ADP Installations.[4]

[3]EIA/TIA publications are available from Global Engineering Documents, 15 Inverness Way East, Englewood, Colorado 80112, USA (http://global.ihs.com/).

[4]FIPS publications are available from the National Technical Information Service (NTIS), U. S. Dept. of Commerce, 5285 Port Royal Rd., Springfield, VA 22161.

Copyright © 1999 IEEE. All rights reserved.

Copyright by the Institute Of Electrical & Electronics Engineers Inc
Fri Jul 20 10:39:08 2001

IEEE Std 141-1993, IEEE Recommended Practice for Electric Power Distribution for Industrial Plants (*IEEE Red Book*).[5]

IEEE Std 142-1991, IEEE Recommended Practice for Grounding of Industrial and Commercial Power Systems (*IEEE Green Book*).

IEEE Std 241-1990, IEEE Recommended Practice for Electric Power Systems in Commercial Buildings (*IEEE Gray Book*).

IEEE Std 399-1997, IEEE Recommended Practice for Industrial and Commercial Power Systems Analysis (*IEEE Brown Book*).

IEEE Std 446-1995, IEEE Recommended Practice for Emergency and Standby Power Systems for Industrial and Commercial Applications (*IEEE Orange Book*).

IEEE Std 518-1982, IEEE Guide for the Installation of Electrical Equipment to Minimize Electrical Noise Inputs to Controllers from External Sources.

IEEE Std 519-1992, IEEE Recommended Practices and Requirements for Harmonic Control in Electric Power Systems.

IEEE Std C57.12.01-1998, IEEE Standard General Requirements for Dry-Type Distribution and Power Transformers Including Those With Solid-Cast and/or Resin-Encapsulated Windings.

IEEE Std C57.12.91-1995, IEEE Test Code for Dry-Type Distribution and Power Transformers.

IEEE Std C57.110-1998, IEEE Recommended Practice for Establishing Transformer Capability When Supplying Nonsinusoidal Load.

IEEE Std C62.36-1994, IEEE Standard Test Methods for Surge Protectors Used in Low-Voltage Data, Communications, and Signaling Circuits.

IEEE Std C62.41-1991, IEEE Recommended Practice on Surge Voltages in Low-Voltage AC Power Circuits (ANSI).

IEEE Std C62.45-1992, IEEE Guide on Surge Testing for Equipment Connected to Low-Voltage AC Power Circuits.

NFPA 70-1999, National Electrical Code® (NEC®).[6]

NFPA 75-1999, Protection of Electronic Computer/Data Processing Equipment.[7]

---

[5]IEEE publications are available from the Institute of Electrical and Electronics Engineers, 445 Hoes Lane, P.O. Box 1331, Piscataway, NJ 08855-1331, USA (http://www.standards.ieee.org/).

[6]The NEC is published by the National Fire Protection Association, Batterymarch Park, Quincy, MA 02269, USA (http://www.nfpa.org/). Copies are also available from the Institute of Electrical and Electronics Engineers, 445 Hoes Lane, P.O. Box 1331, Piscataway, NJ 08855-1331, USA (http://www.standards.ieee.org/).

 Copyright © 1999 IEEE. All rights reserved.

Copyright by the Institute Of Electrical & Electronics Engineers Inc
Fri Jul 20 10:39:09 2001

NFPA 780-1997, Standard for the Installation of Lightning Protection Systems.

UL 96-1998, Lightning Protection Components.[8]

UL 96A-1998, Installation Requirements for Lightning Protection Systems.

UL 497-1996, Protectors for Paired Conductor Communications Circuits.

UL 497A-1998, Secondary Protectors for Communications Circuits.

UL 1449-1996, Transient Voltage Surge Suppressors.

UL 1950-1998, Information Technology Equipment Including Electrical Business Equipment.

8.9 Bibliography

Additional information may be found in the following sources:

[B1] Gruzs, T. M., "The How's and Why's of Isolated Grounding," *Power Quality Proceedings*, Oct. 1993.

[B2] Lai, J. S. and Martzloff, F. D., "Coordinating Cascaded Surge-Protective Devices," *Proceedings, IEEE/IAS Annual Meeting*, pp. 1812-19, Oct. 1991.

[B3] Lewis, W. H., *Computer Site Integration Techniques*, Interference Control Technologies, Inc., 1993.

[B4] Lewis, W. H., "The Use and Abuse of Insulated/Isolated Grounding," *IEEE Transactions on Industry Applications*, vol. 25, no. 6, pp. 1093-1101, Nov./Dec.1989.

[B5] Martzloff, F. D., "Coupling, Propagation, and Side Effects of Surges in an Industrial Building Wiring System," *IEEE Transactions on Industry Applications*, vol. IA-26, no. 2, pp. 193-203, Mar./Apr. 1990.

[B6] Morrison and Lewis, *Grounding and Shielding for Facilities*, John Wiley & Sons, 1990.

[B7] Scheide, A.W., "Evaluation of the Shielding Properties of Cable Tray for Use in an Industrial Environment," *IEEE transactions on Industry Applications*, vol. IA-8, no. 6, pp. 783-787, Nov./Dec. 1972.

[B8] Zavadil, R., M. F. McGranaghan, G. Hensley, and K. Johnson, "Analysis of Harmonic Distortion Levels in Commercials Buildings," *Proceedings, PQA '91, First International Conference on Power Quality: End-Use Applications and Perspectives.*

[7]NFPA publications are published by the National Fire Protection Association, Batterymarch Park, Quincy, MA 02269, USA (http://www.nfpa.org/).

[8]UL publications are available from Global Engineering Documents, 15 Inverness Way East, Englewood, Colorado 80112, USA (http://global.ihs.com/).

Copyright © 1999 IEEE. All rights reserved.

Copyright by the Institute Of Electrical & Electronics Engineers Inc
Fri Jul 20 10:39:10 2001

Chapter 9
Telecommunications and distributed computing

9.1 Introduction

This chapter deals with the unique considerations that arise in powering, grounding, and protecting telecommunications and distributed computing systems in commercial and industrial user facilities. Such systems may contain telephone answering machines, fax machines, desktop publishing computers and peripherals, industrial process control units, remote terminals, and other electronic equipment. Examples include, but are not limited to, the following:

a) Electronic equipment located away from (distributed) the telecommunications or information technology room(s).

b) Compatibility and compliance with rules-of-interconnection (demarcation point or interface) to regulated communication service providers such as the local telephone company and cable TV company.

c) The sometimes impracticality of provisioning a centralized ac power conditioning topology for distributed subsystems.

d) The sometimes impracticality of provisioning a common low-impedance grounding reference for distributed types of systems.

e) Distributed types of systems with metallic interconnection across different floor levels, expansive floor spaces, campus style buildings, and separate buildings.

f) The difference in ground potentials across expansive buildings or between buildings. These differences in ground potentials are described in Chapter 3 as "ground reference problems."

For a detailed description of power and grounding problems related to distributed-type systems, see Chapter 3, Chapter 4, and Chapter 8. For example, see 3.3 on grounding considerations, 4.7.1 on basic grounding and bonding concepts, and 8.5.4.5 on single-point and multipoint grounding. Further useful explanatory and tutorial information is contained in many of the industry guidelines listed in Annex 9A.

9.2 Nomenclature

Telecommunications is considered to include traditional telephone systems, embedded telephone functions within information technology equipment (computer telephony), and information technology equipment. For the purposes of this chapter, distributed computing (historically considered data and control circuitry) is also considered to be telecommunications (see EIA/TIA 607A-1999).[1]

[1]Information on references can be found in 9.12.

Copyright © 1999 IEEE. All rights reserved.

Previous page is blank

Copyright by the Institute Of Electrical & Electronics Engineers Inc
Fri Jul 20 10:39:13 2001

9.3 Scope

This chapter provides guidance in accordance with generally accepted industry practices, codes, standards, and methods for powering and grounding telecommunications and distributed computing systems in commercial and industrial locations. Recommendations in Chapter 8 are considered fully applicable to distributed computing and telecommunications unless otherwise noted within this chapter. The public telephone network and similar types of service providers (utilities) are considered outside the scope of this standard.

9.3.1 Applications not covered

This standard does not cover applications such as telephone central offices and similar-type facilities, telecommunications cable entrance facilities, power plant facilities, or shielded rooms. Grounding, bonding, and electrical protection of the public telephone network (PTN), up to and including the network interface, are not covered. Equipment-specific grounding, bonding, and electrical protection are not covered.

9.4 General

9.4.1 Objectives

The objectives of this chapter are to provide for

a) Safety of personnel;

b) Proper system and equipment operation;

c) Minimization of potential differences between metallic frames and structures;

d) Fault current paths of adequate current-carrying and fault-clearing capability;

e) Noise reduction;

f) Reliable grounding and bonding connections;

g) Ease of implementation resulting in practical, cost-effective installations;

h) Deference to other industry standards, practices, design methods, and procedures, where appropriate.

9.4.2 Background

9.4.2.1 Telecommunications

Telephone central offices arranged into a switching network allow local telephone stations to readily access any other telephone station connected anywhere in the system. In order to maintain universal and reliable connectivity, power and grounding methods for telephone central

 Copyright © 1999 IEEE. All rights reserved.

Copyright by the Institute Of Electrical & Electronics Engineers Inc
Fri Jul 20 10:39:14 2001

offices are very stringent. After deregulation of the U.S. telephone industry in 1984, the customer side of the PTN interface became the responsibility of the user and the equipment suppliers. In the commercial environment, telecommunications equipment that is under control of the tenant or owner is often called a private automatic branch exchange (PABX), key system, or station set. Equipment and apparatus is historically called customer premises equipment (CPE) and may be either telephone terminal equipment (TTE) or information technology equipment (ITE). Industry practices for the CPE commercial environment typically come from the Telecommunications Industry Association (TIA). Most commercial buildings need to accommodate a multivendor, multiproduct and multitenant environment. Unfortunately multipower/grounding/protection environments do not generally promote network reliability. Figure 9-1 illustrates the end-to-end layout of the traditional telephone system.

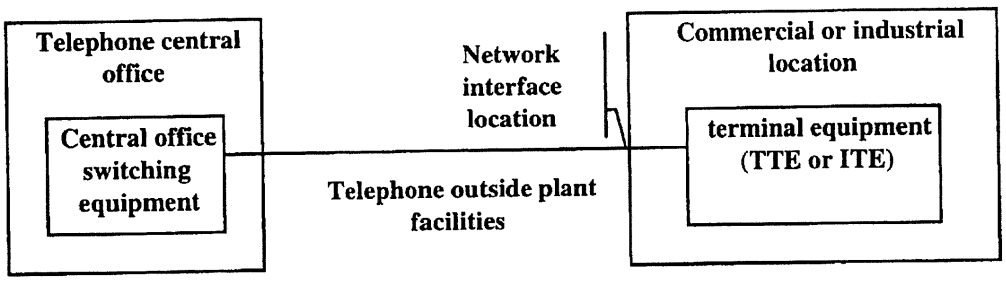

Figure 9-1—Telecommunications system layout

9.4.2.2 Distributed computing

Power electronics and distributed computing (microprocessors and peripherals) are increasingly combined to automate and control industrial processes and data network access and management. Distributed nodes and peripherals continue to grow farther apart in horizontal and vertical distance and depend upon computer and telecommunications links for information control and transfer. Increased separation and greater distances magnify equipment and signaling sensitivity to power quality and grounding problems. Ground potential reference shift between different grounding points in the same building and surge events on networks powered from different power sources combine to stress the operational and withstand capability of the links and distributed components. Optical couplers and fiber optic links are known methods to greatly reduce grounding and surge problems in distributed links and networks. (See Figure 9-2).

9.5 Recommended practices

For telecommunications and distributed computing environments, recommended practices include, but are not limited to, the items listed in Table 9-1.

Copyright © 1999 IEEE. All rights reserved.

Copyright by the Institute Of Electrical & Electronics Engineers Inc
Fri Jul 20 10:39:15 2001

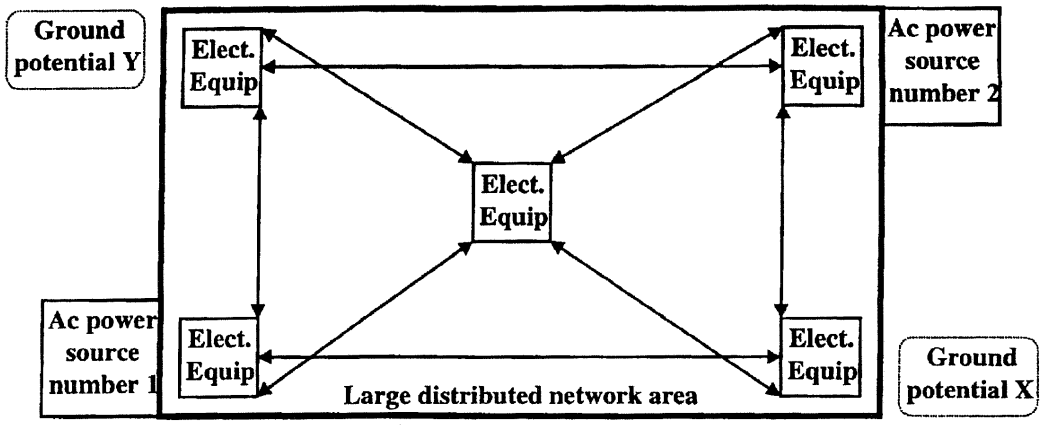

Figure 9-2—Telecommunications system layout

Table 9-1—List of recommended practices

Item	Recommended practice	Comment
1	Apply a systems application engineering approach for both the power and signaling ports of the electronic equipment.	Each unit of a telecommunications or computer network should be observed as part of the building's electrical and electronic infrastructure. A whole-building approach is desirable.
2	Adhere to established criteria for the specific power and grounding topology of choice.	See 9.6 for a description of two recognized topologies. In some cases, mixing the criteria may violate the principles of operation for that topology. For example, common bonding network (CBN) criteria should not be used for IBN systems.
3	Decouple interconnected systems that are powered from different power sources.	Decoupling helps to reduce any intersystem problems related to the clearing of power faults and differences in power system ground reference potentials.
4	Decouple interconnected systems that are connected to different ground references that may become offset during surge events, ground potential rise, or steady-state equalizing currents.	Decoupling helps to reduce any intersystem problems related to excessive current on common grounding references.

 Copyright © 1999 IEEE. All rights reserved.

Copyright by the Institute Of Electrical & Electronics Engineers Inc
Fri Jul 20 10:39:16 2001

9.6 Recommended power and grounding topologies

Power and grounding of telecommunications and distributed computing systems should follow a recognized topology of application. In selecting the type of topology, consideration should include the existing design arrangement of the equipment, ease of installation, practicality for the particular type of location and existing equipment, and the existing topology already in place.

9.6.1 Isolated bonding network (IBN) electronic equipment

Some types of electronic equipment employ a segregated bonding method or topology to prevent any buildup of potential or currents in the framework of the electronic equipment. In effect, the electronic equipment is "isolated to the specific location area." In the telecommunications industry, such methods are described as *isolated bonding networks (IBN)*. In the computer (room) environment, such methods are only partially accomplished by the isolated grounding receptacle (IGR) circuit. The IBN topology is rarely used in distributed environments but may often be found in large telephone equipment rooms.

IBN types of equipment can coexist in the same equipment room with CBN equipment as long as the IBN power and grounding topology requirements are fully met. In other words, the CBN equipment installation shall not compromise the power and grounding integrity of the IBN equipment installation.

Most dc-powered IBN equipment requires a minimum of three input wiring conductors: battery, battery return, and equipment ground (dc egc).

The use of IBN electronic equipment is a recommended practice where required by the manufacturer. This arrangement requires the equipment to be installed with careful considerations for power and signal port system isolation (see Bellcore [B2][2] and ITU-T K.31-1993). Figure 9-3 illustrates an example IBN equipment arrangement. This illustration is only one possible general version of establishing an IBN equipment arrangement. Bellcore [B2] and ITU-T K.31-1993 contain rules and design principles for an IBN and should be consulted on topics such as:

— Utilizing a common dc power plant for both CBN and IBN equipment topologies;

— System grounding of the dc power plant;

— Grounding of the battery return or logic return circuitry of the IBN equipment;

— Equipment grounding of the IBN frames;

— Maintaining a maximum one-floor separation between the dc power plant and the IBN equipment;

— Establishment and maintenance of a "ground window" or "single-point connection window";

[2]The numbers in brackets correspond to those of the bibliography in 9.13.

Copyright © 1999 IEEE. All rights reserved.

Copyright by the Institute Of Electrical & Electronics Engineers Inc
Fri Jul 20 10:39:16 2001

— Utilizing dc-ac inverters or local ac power branch circuits for IBN equipment requiring ac power;

— Requirements for the bonding to the "ground window" of all entering/exiting grounding circuits to/from the IBN;

— Maintaining a minimum 1.8 m (6 ft) separation between IBN equipment and the CBN. Otherwise, establish a bonding busbar arrangement whereby all CBN items within 1.8 m (6 ft) are bonded to the busbar and the busbar is bonded to the "ground window."

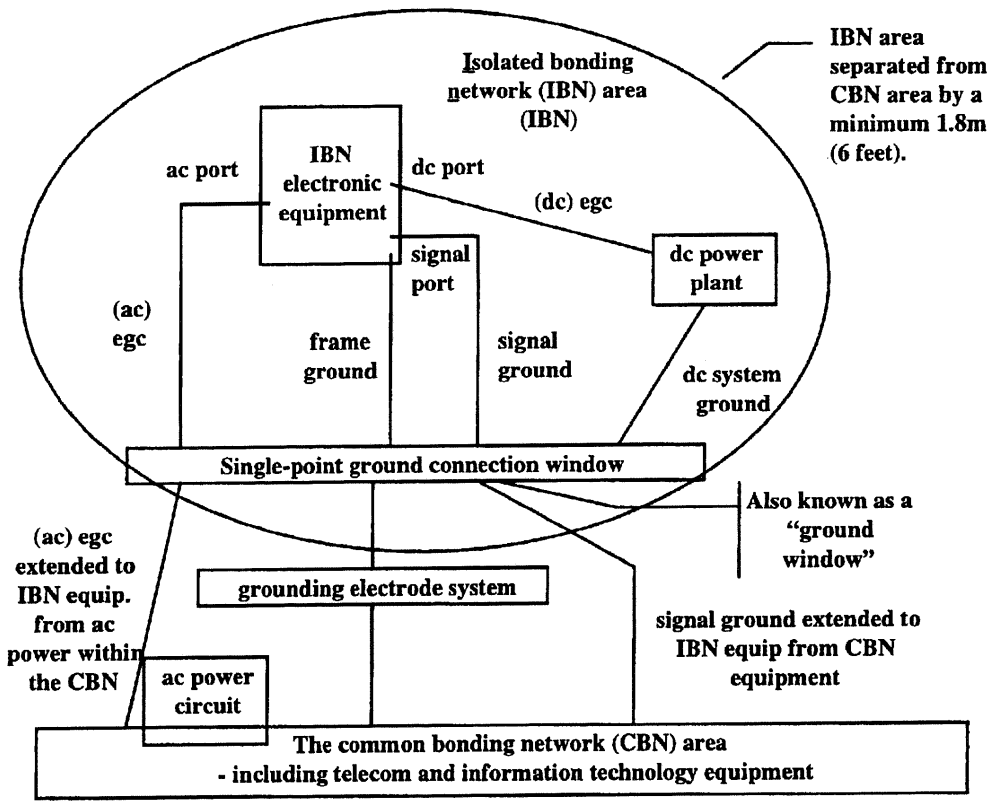

Figure 9-3—Example of IBN arrangement

At a systems level, IBN electronic equipment effectively maintains equal voltage potentials across the equipment and its power and signaling ports. Only IBN compatible electronic equipment should be installed into a computer or telecom network that is designed to use an IBN topology.

In a related arrangement, the IGR circuit (by design) provides for isolation of the (ac) equipment grounding circuit (ac egc). Some distributed networks are installed to follow a manufacturer's requirement for an IGR circuit. For the purposes of establishing an IBN, the IGR circuit is not a recommended practice.

 Copyright © 1999 IEEE. All rights reserved.

Copyright by the Institute Of Electrical & Electronics Engineers Inc
Fri Jul 20 10:39:17 2001

9.6.1.1 Single-point grounding

Single-point grounding incorporating the "ground window" concept may be required for stored program-controlled electronic equipment used for telecommunications and information processing. This requirement is more typical for dc-powered PABX telecommunications system installations similar to the PTN-switching environment. Typically, these systems are located in controlled areas where the power and grounding topologies are carefully designed and maintained. For example, both the dc power plant serving the electronic telecommunications equipment and the telecommunications equipment grounding conductors (dc egc) shall be grounded at the specified "ground window" location.

From a generic perspective, single-point grounding should not be equated with the term "ground window." Single-point grounding is only the accomplishment of grounding electronic equipment to a predetermined single point.

9.6.2 CBN electronic equipment

Some types of existing electronic equipment employ multiple bonding connections to equalize any local differences of potential at the electronic equipment. In the telecommunications industry, such methods are described as mesh bonding networks (see ITU-T K.31-1993). In the computer (room) environment, such methods are described as signal reference structures (SRS). In the distributed environment, such methods typically employ unbalanced (common signal return conductor) signal interface drivers.

Most dc-powered CBN equipment requires a minimum of two input wiring conductors, battery, and battery return. In this minimum configuration, the battery return also serves as the grounding conductor. Other dc-powered CBN equipment requires a separate equipment-grounding conductor (dc egc) if the battery return conductor is not intended to additionally serve as the equipment ground.

CBN types of equipment can coexist in the same equipment room with IBN equipment as long as the IBN power and grounding topology requirements are fully met. In other words, the CBN equipment installation shall not compromise the grounding integrity of the IBN equipment installation.

The CBN topology is a recommended practice where the electronic equipment power and grounding circuits and signaling links are designed and installed to operate properly within a CBN environment. In other words, such electronic equipment is designed with immunity to expected voltage and current stresses known to exist or become active within the CBN environment. This arrangement allows the equipment to be installed without further considerations for power and signal port isolation.

The use of CBN electronic equipment may be an acceptable practice where the existing electronic equipment power and grounding topology does not adequately decouple the ports from power circuits and signaling links and it is considered impractical or too costly to employ decoupling mitigation methods. Figure 9-4 illustrates equipment within a CBN.

Copyright © 1999 IEEE. All rights reserved.

Copyright by the Institute Of Electrical & Electronics Engineers Inc
Fri Jul 20 10:39:18 2001

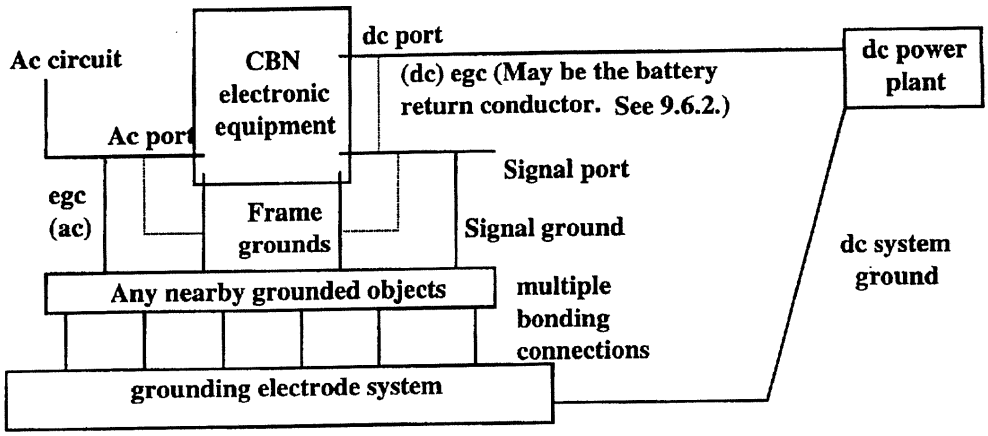

Note: The dotted lines indicate the possibility of intentional common bonding of these different grounds within the CBN equipment.

Figure 9-4—Example CBN arrangement

CBN electronic equipment is intended to effectively equalize voltage potentials across the equipment and its power and signaling ports. However, in a distributed environment there may still be considerable steady-state or transient current flowing in the metallic bonding paths, which may degrade or damage the power and signaling ports. Depending on the magnitude of potential differences and current (may be tens or hundreds of milliamps) flowing in equipment frames at the specific distributed location, the CBN topology may not provide satisfactory performance. The equipment manufacturer should be consulted to determine withstand capability and any preferred mitigation methods. Methods such as surge protective devices (SPDs), additional grounding conductors, and devices to reduce electromagnetic interference (EMI) may be required.

CBN electronic equipment may be made effectively decoupled by use of isolation devices for the power and signaling ports. Example isolation devices include fiber-optic couplers, signal transformers, isolation power transformers, short-haul modems, and SPDs.

9.7 Industry guidelines

The telecommunications industry and other interrelated industries develop codes, standards, practices, methods, and procedures related to powering and grounding electronic equipment. Many of the industry accepted recommendations on these and related subjects are found in these guidelines. A brief description of these industry guidelines is presented in Annex 9A. Other guidelines (references and bibliographies) are previously described in Chapter 8 (see 8.4).

Copyright © 1999 IEEE. All rights reserved.

Copyright by the Institute Of Electrical & Electronics Engineers Inc
Fri Jul 20 10:39:19 2001

9.8 General compliance

Recommendations for powering, and grounding and bonding telecommunications and distributed computing in commercial and industrial locations shall be accomplished within the context of compliance to adopted industry codes, regulations, and standards. The following compliance examples apply:

a) Local codes in effect for the location;

b) Compliance with the National Electrical Code® (NEC®) (NFPA 70-1999) [B3] (premises wiring);

c) Compliance with the National Electrical Safety Code® (NESC®) (Accredited Standards Committee C2-1997) [B1] (non-premises wiring);

d) Compliance with applicable product safety standards [nationally recognized testing laboratory (NRTL) listing];

e) Compliance with other regulatory standards such as those from the Federal Communications Commission (FCC) and Occupational Safety and Health Administration (OSHA).

9.9 Power and grounding telecommunications and distributed computing systems

The effects of interconnected metallic cabling, unbalanced signal interfaces (ports), shared power circuits, and shifts in ground reference potential are the primary problems unique to telecommunications and distributed computing systems.

In addition to the common recommended practices listed in 9.5, see other applicable recommended practices in this chapter, such as those described in 9.11.

9.10 Isolated ground receptacle (IGR)

The IGR is not recommended for telecommunications branch circuits except where such use is documented as a requirement by the telecommunications system original equipment manufacturer (OEM) and meets installation requirements as described in Sections 250-146(d), 410-56(c), and 384-20 (exception) of the 1999 NEC [B3]. (See Chapter 8 for more explanations and recommendations.)

9.11 Power

Recommended practice is to locate the power source near the distributed local area for a cluster, or locally interconnected clusters, of distributed electronic equipment. The cluster should include all units that could be impacted by impaired power quality. For example, hubs and routers should be powered from the same power source as the associated computer server.

Copyright © 1999 IEEE. All rights reserved.

Copyright by the Institute Of Electrical & Electronics Engineers Inc
Fri Jul 20 10:39:20 2001

The reasoning for this distributed power arrangement is the same as described in Chapter 8. Types of distributed power arrangements include, but are not limited to, the following:

— A centralized uninterruptible power supply (UPS) for a cluster of electronic equipment;
— A dedicated UPS for a specific unit of electronic equipment; and
— Equipment-specific power unit such as for an ISDN terminal.

It is not a recommended practice to power interconnected equipment from different power sources in the same or adjoining building. Where different power sources must be used, decoupling (with adequate withstand rating) should be provided for the power and signal ports.

9.11.1 Power for different network topologies

Different network topologies such as Ethernet, Token Ring, LON Works, and CEBus, can accommodate certain arrangements for power nodes based upon their unique server/controller and cabling topologies. Recommended practice is to arrange the power distribution to be readily supportive of the existing network topology. Manufacturers and providers of the network equipment should be consulted for preferences.

9.11.2 Grounding

Grounding considerations involve system grounding (if required) for distributed power sources; grounding of cable shields, grounding of ac, telecom, and data port SPDs; and grounding of any otherwise ungrounded metallic objects.

9.11.2.1 Signaling ports

Where signal ports are not decoupled, grounding can be a confusing problem. As an example, for safety, metallic-shell devices such as RS-232 metallic connectors should be grounded. Typically, the ground reference for the RS-232 connector is made by bonding (at pin 1) to the electronic equipment's ac circuit port's equipment grounding conductor (green wire). In electronic equipment, ground reference for the central processing unit is often connected to the metal chassis, which is also connected to the green wire. Where the electronic equipment is not interconnected (stand-alone), this ground and bonding arrangement is not considered a problem.

However, for interconnected electronic equipment using RS-232 data lines, a "ground loop" is said to exist. The ground loop can contribute a pathway for ground potential reference shift to cause overvoltage stress on the solid-state components of the interconnected equipment. Further, certain types of power system faults and activation of associated SPDs can cause damaging currents to flow on the signal reference conductor (pin 7) of the RS-232 cable and port. Also, nearby lightning events may induce damaging circulating current in the same ground loop.

Other types of interconnections recognized as susceptible to ground loops are lengthy printer cables, shielded data wiring, and some types of network peripheral wiring.

Copyright by the Institute Of Electrical & Electronics Engineers Inc
Fri Jul 20 10:39:22 2001

9.11.2.2 Integrity of intentional ground loops

The 10BASE-T Ethernet system is considered immune to intentional ground loops. The integrity of an intentional ground loop should not be violated. Where a ground loop is considered a problem, recommended practice is to provide for decoupling at the interface port.

9.11.2.3 Data-line surge suppressors

Data-line surge suppressors do not prevent ground loops from corrupting data. Voltage high enough to trip the suppressor can corrupt the data. Data-line surge suppressors are not recommended when a steady-state ground potential difference exists. Recommended practice is to provide decoupling at the interface port.

9.11.3 Signal cabling considerations

There are instances where shielded cabling systems fail due to high frequency noise coupled directly through the grounded connections between interconnected electronic equipment (see FIPS 94-1983). Grounding the shield at one end only may sometimes mitigate this ground loop noise. However, this solves one problem but creates another—for single-ended ground configurations the shield acts as an antenna and can be a strong source of radiated interference!

A well balanced twisted pair cabling system (with tightly twisted pairs) generates very low emissions and provides high noise immunity. Adding a shield may not significantly improve matters (other than reducing capacitive coupled interference) and may cause other problems.

9.11.3.1 Pathway separation between telecommunications and electrical cables

Physical separation to prevent EMI may not be as significant an issue as once thought—pending the performance quality of the cabling. In 1994, Telecommunications Industry Association (TIA) standards committee TR41.8 conducted testing to see how much EMI resulted when electrical branch circuit and unshielded twisted pair (UTP) cables were run in close proximity. The test setup included the worst-case electrical disturber the committee could find in an office environment—an electric pencil sharpener. This equivalent noise threshold was 500 V, but additional network testing showed that it took a disturbance of five times this value (2500 V) to create an error in a token ring network. However, it is still a recommended practice that

— Pathway separation be maximized where possible;

— Power circuit conductors be maintained close together to minimize interference; and

— Raceways used to house telecommunications cabling be metallic, fully enclosed, and grounded.

Copyright © 1999 IEEE. All rights reserved.

Copyright by the Institute Of Electrical & Electronics Engineers Inc
Fri Jul 20 10:39:24 2001

9.11.3.2 Noise coupling into cabling

There are two mechanisms for noise coupling into cabling:

a) Induced noise due to external field coupling (capacitive, inductive, radiated); and

b) Conducted noise due to external ground loops.

The induced common-mode coupling voltage (V_{cm}) is a function of the electric field strength and the loop area formed by a conductor of given length that is suspended at an average height above the ground plane.

Installing the signal cable near a ground plane can significantly reduce the magnitude of induced common-mode noise coupling. Changing the average height from 1 m to 0.1 m is equivalent to reducing the field intensity from 3 V/m to 0.3 V/m, if the height were constant.

9.11.3.3 UTP cabling balance

V_g is the conducted noise due to the potential difference of the ground (earth) between the different units of interconnected electronic equipment. For a balanced circuit (such as UTP), the noise currents flowing in each conductor of a pair are equal in magnitude and in the same direction.

Equal currents flowing in each half of the primary winding of a well-balanced transformer produce equal and opposite voltages at the secondary winding, resulting in a net cancellation [common-mode rejection (CMR)] of the noise at the input to the receiver. The CMR can be further improved by adding a common-mode choke in series with the transformer. A minimum CMR ratio of 40 dB is desirable for high-quality magnetics over the operating frequency range of interest.

Isolating the ground connection at one end of the circuit may serve to reduce the noise current flowing through the ground return path. However, such an indication does not mean the ground connection should be left open. Safety and other performance considerations may dictate that the ground connection is left intact and mitigation is accomplished in another acceptable manner.

The concept of balanced twisted pairs and the calculation of the induced noise assume a well-balanced cabling link. In practice, cables and connecting hardware exhibit a finite unbalance in capacitance, resistance, and inductance between each conductor and the ground return path. Depending on the degree of unbalance, a part of the common-mode noise signal is converted to a differential-mode noise signal that passes directly to the input of the receiver.

9.11.3.4 Screened twisted pair (ScTP) shield effectiveness and ground loop noise

Many of the same considerations that apply to UTP cables concerning noise coupling also apply to ScTP cables. There are two main differences:

 Copyright © 1999 IEEE. All rights reserved.

Copyright by the Institute Of Electrical & Electronics Engineers Inc
Fri Jul 20 10:39:25 2001

a) The effectiveness of the cable shield to reduce external noise; and

b) How the cables shield is terminated at the equipment.

The shield factor measures the effectiveness of a shield in the presence of an electromagnetic field and is defined as the ratio on the induced voltage in the disturbed circuit (receiver) after the shield is introduced, to the same induced voltage without the shield. The shield factor is influenced by

— Desired operating frequency;

— Type, thickness, and geometry of the shielding materials;

— Type and quality of the shield termination;

— Methods used in grounding the shield; and

— End-to-end discontinuities.

For safety and performance the cable shield typically needs to be grounded at both ends so that the shield currents can counteract the effects of electromagnetic noise induction from an external field. However, grounding the shield at both ends creates the possibility of conducted noise due to ground loop currents. The worst offenders are high-frequency noise transients generated by starting and stopping machinery such as air compressors, elevator/lift motors, or from switching power supplies such as UPS units. The magnitude of the conducted noise currents depends on the quality of the grounding and earthing, and can impair distributed system performance. These types of problems can be difficult to diagnose and costly to fix.

Shielded cable systems can be effective in maintaining the electromagnetic compatibility (EMC) performance of the distributed equipment, and can show better results than unshielded, where all other considerations are met. Such considerations include ground loop noise and all grounding and bonding problems involved in ensuring shield continuity throughout the system.

9.11.3.5 Coax cabling

Coax cabling readily provides a path to promote ground loops since its outer shield is normally grounded. With the growing use of broadband services for multimedia, coax-grounded shields are likely to be involved in detection of unwanted "ground loops" that cause hum bars on video displays. Recommended practice is to provide fiber links or otherwise safely decouple the effects of the coax shield continuity between interconnected electronic equipment.

Copyright © 1999 IEEE. All rights reserved.

Copyright by the Institute Of Electrical & Electronics Engineers Inc
Fri Jul 20 10:39:26 2001

9.12 References

This recommended practice shall be used in conjunction with the following publications. When the following standards are superseded by an approved revision, the revision shall apply.

EIA/TIA 607A-1999, Commercial Building Grounding and Bonding Requirements For Telecommunications.[3]

FIPS Pub 94-1983, Guidelines on Electrical Power for ADP Installations.[4]

ITU-T K.31-1993, Bonding Configurations and Earthing of Telecommunication Installations Inside A Subscriber's Building.[5]

9.13 Bibliography

Additional information may be found in the following source:

[B1] Accredited Standards Committee C2-1997, National Electrical Safety Code® (NESC®).[6]

[B2] Bellcore TR-EOP-000295—Issue 2, July 1992, Isolated Ground Planes: Definition And Application To Telephone Central Offices.

[B3] NFPA 70-1999, National Electrical Code® (NEC®).[7]

[3]EIA and TIA publications are available from Global Engineering, 1990 M Street NW, Suite 400, Washington, DC, 20036, USA (http://global.ihs.com/).

[4]FIPS publications are available from the National Technical Information Service (NTIS), U. S. Dept. of Commerce, 5285 Port Royal Rd., Springfield, VA 22161.

[5]ITU-T publications are available from the International Telecommunications Union, Place des Nations, CH-1211, Geneva 20, Switzerland (http://www.itu.int/). Copies are also available from Global Engineering, 15 Inverness Way East, Englewood, CO 80112-5704, USA (http://global.ihs.com/).

[6]The NESC is available from the Institute of Electrical and Electronics Engineers, 445 Hoes Lane, P.O. Box 1331, Piscataway, NJ 08855-1331, USA (http://www.standards.ieee.org/).

[7]The NEC is published by the National Fire Protection Association, Batterymarch Park, Quincy, MA 02269, USA (http://www.nfpa.org/). Copies are also available from the Institute of Electrical and Electronics Engineers, 445 Hoes Lane, P.O. Box 1331, Piscataway, NJ 08855-1331, USA (http://www.standards.ieee.org/).

 Copyright © 1999 IEEE. All rights reserved.

Copyright by the Institute Of Electrical & Electronics Engineers Inc
Fri Jul 20 10:39:27 2001

Annex 9A

(informative)

List of telecommunications industry guidelines

This annex is provided for information only and is not considered all-inclusive (see 9.8). The telecommunications industry and other interrelated industries develop codes, standards, practices, methods, and procedures related to powering and grounding electronic equipment. Many of the industry-accepted recommendations on these and related subjects are found in the following listing of guidelines.

Committee T1—American National Standard(s) for Telecommunications
Secretariat - Alliance For Telecommunications Industry Solutions (ATIS)
1200 G Street NW - Suite 500 - Washington, DC 20005 - (202) 434-8836

ATIS was previously known as the Exchange Carriers Standards Association (ECSA). Emphasis is on standards for the public telephone network (PTN). ANSI Committee T1 standards on public telephone network applications may not be readily applicable, standardized, or normalized for the commercial or industrial location. In the absence of other standards specific to the commercial building, ANSI T1 standards may be the only viable resource. For European and worldwide locations, see also ETSI and ITU-T standards.

ANSI	ANSI/T1.308-1996	Central Office Equipment—Electrostatic Discharge Immunity Requirements
This standard provides electrostatic discharge (ESD) immunity criteria and test procedures for equipment assemblies intended for use in telephone central offices. It is intended to establish the capability of central office equipment to function normally after receiving typically encountered electrostatic discharges.		
ANSI	ANSI/T1.311-1998	DC Power Systems—Telecommunications Environment Protection
This is a protection standard for the design and installation of telecommunications dc power systems in a controlled or limited access area. This standard is applicable to the design, engineering, installation, and acceptance of centralized dc power systems. This is the only national standard specifically intended for the acceptance of such systems.		
ANSI	ANSI/T1.313-1997	Electrical Protection for Telecommunications Central Offices and Similar Type Facilities
Telecommunications central offices and similar-type facilities are often subjected to disturbances from lightning and ac power line faults, either directly or indirectly, through the communications cables and ac power facilities that serve them. This standard provides the minimum electrical protection, grounding, and bonding criteria necessary to mitigate the disruptive and damaging effects of lightning and ac power faults. It is intended to serve as a guide for designers of such facilities in the application of electrical protection, and grounding and bonding as a function of the electrical environment.		

Copyright © 1999 IEEE. All rights reserved.

Copyright by the Institute Of Electrical & Electronics Engineers Inc
Fri Jul 20 10:39:28 2001

ANSI	ANSI/T1.315-1994	Voltage Levels for DC-Powered Equipment—Used in the Telecommunications Environment
This standard establishes requirements and objectives for voltage ranges and associated characteristics for telecommunications load equipment operating from centralized dc power systems, owned or operated by an exchange or interexchange carrier.		
ANSI	ANSI/T1.316-1997	Electrical Protection of Telecommunications Outside Plant
Telecommunications outside plants, by nature of their outdoor location, and frequent joint-use or joint right-of-way installations with power facilities, are often subject to disturbances and ac power faults. This standard provides the minimum electrical protection, and grounding and bonding criteria necessary to mitigate the disruptive and damaging effects of lightning and ac power faults. It is intended to serve as a guide for designers of such facilities in the application of electrical protection, and grounding and bonding as a function of the electrical environment.		
ANSI	ANSI/T1.318-1994	Electrical Protection Applied to Telecommunications Network Plant at Entrances to Customer Structures or Buildings
Telecommunications network plants are often subject to electrical disturbances from lightning and commercial ac power line faults, and as such, electrical protection is a necessary consideration at entrances to customer structures and buildings. This standard provides the minimum electrical protection, and grounding and bonding criteria at telecommunications network entrances to customer structures and buildings. It is intended to serve as a guide for designers of such facilities in the application of electrical protection, and grounding and bonding as a function of the electrical environment.		
ANSI	ANSI/T1.320-1994	Above-Baseline Electrical Protection for Designated Telecommunications Central Offices and Similar-Type Facilities against High-Altitude Electromagnetic Pulse (HEMP)
Telecommunications central offices and similar-type facilities may be subjected to the effects of a high-altitude electromagnetic pulse (HEMP). HEMP is a by-product of a high altitude (i.e., above the atmosphere) nuclear explosion. Such a pulse is capable of causing extensive upset and possibly disabling damage to unprotected telecommunications facilities within line-of-sight of the nuclear device detonation point(s). Central offices and similar-type facilities that incorporate the baseline electrical protection measures specified in ANSI T1.313-1996 provide a measure of protection against the HEMP contingency. The purpose of this new above-baseline standard is to provide additional mitigation measures that will significantly increase the protection of critical components of the public telecommunications network in the event that it becomes exposed to the effects of HEMP. This standard is intended as a guide for the designers of such facilities in the application of basic HEMP protection measures to those central offices and similar-type facilities that may be specifically designated under government contract to receive such measures.		

Copyright © 1999 IEEE. All rights reserved.

Copyright by the Institute Of Electrical & Electronics Engineers Inc
Fri Jul 20 10:39:29 2001

ANSI	ANSI/T1.321 - 1995	Electrical Protection for Network Operator-Type Equipment Positions
Electrical disturbances may appear at network operator-type equipment positions arising either from ESD or from other sources such as lightning or ac power disturbances. This standard provides ESD mitigating measures that are intended to control ESD in the network operator-user environment, and electrical protection measures that are intended to minimize potential differences at network operator-type equipment positions.		
ANSI	ANSI/T1.328 - 1995	Protection of Telecommunications Links from Physical Stress and Radiation Effects and Associated Requirements for DC Power Systems (A Baseline Standard)
This standard provides baseline measures describing the durability (survivability) of outside plant copper-conductor and optical-fiber telecommunications distribution links to various levels of physical stress and radiation effects. The standard applies to optical-fiber and metallic links for trunk, feeder, and local distribution. The standard includes information for the design and installation of aerial, buried, and underground plant, and applies to all telecommunications networks including but not limited to exchange carriers and interexchange carriers. The standard is intended for new installations, and not necessarily for replacement of existing systems. The standard addresses protection against threats such as wind, temperature, fire, water penetration, and the means to keep the links energized (telecommunications power).		
ANSI	ANSI/T1.330-1997	Valve-Regulated Lead-Acid Batteries Used in the Telecommunications Environment
This draft standard establishes requirements for valve-regulated lead-acid (immobilized electrolyte) stationary cells and batteries used in telecommunications applications. It covers both absorbed as well as gelled electrolyte types as means for electrolyte immobilization and addresses the issues of gas recombination and thermal runaway.		
ANSI	ATIS/T1E1 Project 34 - 1/15/98 (draft version)	Electrical Protection of Broadband Facilities
The electrical protection, and bonding and grounding measures presented in this standard are intended to assist in protecting persons, equipment, and property from the effects of lightning, electric power system faults, and electromagnetic interference (EMI) on the broadband facilities. NOTE—This draft standard will be available in later draft versions. The project schedule is to complete the standard in 1998.		

Copyright © 1999 IEEE. All rights reserved.

Copyright by the Institute Of Electrical & Electronics Engineers Inc
Fri Jul 20 10:39:30 2001

ANSI	ATIS/T1E1 Project 37 - 1/9/98 (draft version)	Grounding and Bonding of Network Telecommunications Equipment

This draft standard is intended to define and describe the grounding and bonding topologies commonly used for the installation of network telecommunication equipment in central offices and similar-type facilities. It addresses the requirements for grounding and bonding of network telecommunication equipment, the associated dc and ac power facilities, and the interfacing of co-located telecommunications systems.

NOTE—This draft standard will be available in later draft versions. The project schedule is to complete the standard in 1998.

ANSI	ATIS/T1E1 Project T1Y1-27 - 2/18/98 (draft version)	Classification of Above-Baseline Threats to Telecommunications Links

This standard describes and defines above-baseline physical threats to telecommunications links. It does not provide mitigative measures against stresses resulting from the threats. The nature of these above-baseline threats is unpredictable. The above-baseline threats in this standard are believed to be at the upper limit of reasonable probability, but have some chance of being exceeded in extraordinary circumstances—such as nearby blasting effects from construction sites.

NOTE—This draft standard will be available in later draft versions. The project schedule is to complete the standard in 1998.

Bellcore

Room 3A-184, 8 Corporate Place, Piscataway, NJ 08854-4196 - (732) 699-5800)

Bellcore develops numerous generic requirements on a wide range of subjects necessary for the operation, development, and reliability of the PTN. Many of these generic requirements are the most exacting and demanding within the industry.

Bellcore	TR-EOP-000295 - Issue 2, 7/92	Isolated Ground Planes: Definition And Application To Telephone Central Offices

This technical reference presents Bellcore's view of proposed generic requirements that describe grounding methods for metallic frames and electrical power supplies associated with central office electronic stored program-controlled switching systems (SPCSS) that are installed in an isolated ground plane. The grounding and powering principles contained in this document are also applicable to other telecommunications equipment designed and intended for installation in an isolated ground plane.

Bellcore	TR-NWT-001011 - Issue 1, 2/92	Generic Requirements for Surge Protective Devices (SPDs) On AC Power Circuits

This technical reference presents Bellcore's view of requirements for clamping-type devices used indoors at the service entrance (electrical entrance facility) only.

Copyright © 1999 IEEE. All rights reserved.

Copyright by the Institute Of Electrical & Electronics Engineers Inc
Fri Jul 20 10:39:31 2001

Bellcore	GR-1361-CORE - Issue 1, 9/98	Generic Requirements For Gas Tube Protector Units (GTPUs)
This document describes gas tube protector units (GTPUs) intended for use on paired conductors, at central offices and customer stations, by carrier systems and on the vertical side of the main distributing frame in a center office building. GTPUs are also intended to help avoid interference with the operation of telecommunications networks and also to help provide surge limiting that is compatible with telecommunications networks.		
Bellcore	GR-1089-CORE - Issue 2, 2/99	Electromagnetic Compatibility and Electrical Safety —Generic Criteria for Network Telecommunication Equipment
This generic requirements (GR) document presents Bellcore's view of proposed criteria covering electromagnetic compatibility (EMC) and electrical safety necessary for equipment to perform reliably and safely in a Bellcore client company (BCC) network environment.		
Bellcore	GR-63-CORE - Issue 1, 10/95	Network Equipment-Building System (NEBS) Requirements: Physical Protection
This generic requirements (GR) document identifies the minimum generic spatial and environmental criteria for all new telecommunications equipment systems used in a telecommunications network. The environmental criteria cover the following: (a) temperature and humidity, (b) fire resistance, (c) equipment handling, (d) earthquake, (e) airborne contaminants, (f) acoustic noise, and (g) illumination. This spatial section includes criteria for systems and the associated cable distribution systems, distributing and interconnecting frames, power equipment, operations support systems, and cable entrance facilities.		
Building Industry Consulting Services International (BICSI) 10500 University Center Dr., Suite 100; Tampa, FL 33612-6415 (800) 242-7405 BICSI is a telecommunications association that provides training and certification for communications systems designers. BICSI primarily deals with commercial building environments—including buildings arranged into a campus setting. BICSI publishes and maintains a telecommunications distribution manual (TDM) with emphasis on installation methods. In 1996, BICSI published a local area network (LAN) design manual targeted specifically for LANs in commercial buildings. Both manuals contain installation methods dealing with power, grounding, and EMC.		
BICSI	TDM Manual - Issue 8, 4/98	Telecommunications Distribution Methods Manual
This methods manual contains many detailed chapters of useful information on telephone systems and wiring, local area networks, power, grounding and bonding, and EMC.		
BICSI	LAN Design Manual - Issue 2, 1997	LAN Design Manual
This design manual contains many detailed chapters on local area networks, including useful information on powering and grounding.		

Copyright © 1999 IEEE. All rights reserved.

Copyright by the Institute Of Electrical & Electronics Engineers Inc
Fri Jul 20 10:39:32 2001

Charted Institute of Building Services Engineers)
Delta House - 222 Balham High Road - London SW12 9BS - 0181-675-5211

CIBSE is a charted institution of building services engineers that develops a comprehensive range of reference works to help those that plan, design, or equip buildings.

CIBSE	AM7:1992	Applications Manual: Information Technology and Buildings

This manual is written to assist in the design of buildings suitable for information technology equipment (ITE) and systems, and the design of "user IT" systems that can readily be accommodated in buildings. For U.S. and Canadian locations, see also BICSI TDM Manual.

European Telecommunications Standards Institute (ETSI)
06921 Sophia Antipolis Cedex, France; Tel: + 33 92 94 42 00

ETSI produces European Telecommunications Standards (ETSs). These standards are primarily intended for use in the European community. For U.S. and Canadian locations, see also ANSI T1 and TIA standards.

ETSI	ETS 300 253 January 1995	Equipment Engineering (EE): Earthing and bonding of telecommunication equipment in telecommunication centers

This ETS addresses earthing and bonding of telecommunication equipment in telecommunication centers in relation to safety, functional performance, and EMC. It applies to the bonding network of the building, the bonding network of the equipment, and the interconnection between these two networks. Only one configuration (mesh-BN) is selected from ITU-T Recommendation K.27-1991 and tailored to this ETS.

ETSI	Draft Project 8068 CLC TC 215 (sec.) 32 +32A TD6 – October 1997	Equipment Engineering (EE); earthing and bonding of information technology equipment inside a subscriber's building

This draft ETS addresses earthing and bonding of ITE in subscriber's buildings in relation to safety, functional performance and EMC. It applies to the bonding network of the building, the bonding network of the equipment, and the interconnection between these two networks. At the time of this writing the latest draft was August 1996.

ETSI	pr ETS 300 386-2-3 – Sept. 1996	Equipment Engineering (EE); Public telecommunications network equipment; Electromagnetic Compatibility (EMC) requirements; Part 2-3: Product specific compliance criteria and operating conditions; Power Supply equipment

This draft ETS specifies product-specific EMC requirements for central power plant, end of suite power supplies, uninterruptible power supply (UPS), stabilized ac power supply, and other dedicated telecommunications network power supplies. The applicable EMC tests, the methods of measurement, and the limits are specified in ETS 300 386-1 "Public telecommunications network equipment EMC requirements—Part 1: Product family overview, compliance criteria and test levels."

Copyright © 1999 IEEE. All rights reserved.

Copyright by the Institute Of Electrical & Electronics Engineers Inc
Fri Jul 20 10:39:33 2001

ETSI	ETS 300 132-1 – 9/96	Equipment Engineering (EE): Power supply interface at the input to the telecommunications equipment—Part 1: Interfaces operated by alternating current (ac) derived from direct current (dc) sources
This ETS details the requirements with respect to (a) the performance requirements of the ac power supply derived from dc sources, and (b) the input requirements of the telecommunications equipment connected to that ac power supply.		
ETSI	ETS 300 132-2 – 9/96	Equipment Engineering (EE): Power supply interface at the input to the telecommunications equipment—Part 2: Interfaces operated by direct current (dc) sources
This ETS defines (a) the output performance of the d.c. power equipment at the interface "A," and (b) the input requirements of the telecommunications equipment connected to interface "A" powered by dc.		
International Electrotechnical Commission (IEC) PO Box 131 - 3 Rue de Varembe - CH-1211 Geneva 20 - Switzerland - +41 22 919 02 11 The IEC is the authoritative worldwide body responsible for developing consensus global standards in the electrotechnical field. For the past 40 years, the IEC has also set standards for the electronics and telecommunications industries. IEC standards are widely adopted as the basis of national or regional electrotechnical standards. For example, nearly 90% of the electrotechnical European standards (EN) harmonized by CENELEC and adopted in the countries of the European Union and the European Free Trade Area are either identical with, or very closely based on, IEC international standards. Equivalent EN reference numbers are often included in listings of IEC publications. For U.S. and Canadian locations, see also ANSI T1 and TIA standards.		
IEC	IEC 61000-5-2 (1997-11)	Electromagnetic compatibility (EMC)—Part 5: Installation and mitigation guidelines—Section 2: Earthing and cabling
This technical report (type 3) covers guidelines for the earthing and cabling of electrical and electronic systems and installations aimed at ensuring EMC among electrical and electronic apparatus or systems. More particularly, it is concerned with earthing practices and with cables used in industrial, commercial, and residential installations. This technical report is intended for use by installers and users, and to some extent, manufacturers of sensitive electrical or electronic installations and systems, and equipment with high emission levels that could degrade the overall electromagnetic (EM) environment. It applies primarily to new installations, but where economically feasible, it may be applied to extensions or modifications to existing facilities. Further basic information is given in IEC 61000-5-1 (1996-12).		

Copyright © 1999 IEEE. All rights reserved.

Copyright by the Institute Of Electrical & Electronics Engineers Inc
Fri Jul 20 10:39:34 2001

IEC	IEC 61000-6-1 (1997-07)	Electromagnetic compatibility (EMC)—Part 6: Generic standards—Section 1: Immunity for residential, commercial and light-industrial environments
IEC	IEC 60364-4-444 (1996-04)	Electrical installations of buildings—Part 4: Protection for safety—Chapter 44: Protection against overvoltages—Section 444: Protection against electromagnetic interferences (EMI) in installations of buildings

This section of IEC 60364-4 provides information, for architects of buildings and for designers and installers of electrical installations of buildings, on some installation concepts that can limit EMI. Basic considerations are given here to mitigate these disturbances. Further requirements are given in other chapters or sections of IEC 60364, e.g., IEC 60364-5-548, or in other IEC standards, e.g., IEC 61000-2, IEC 61000-5, IEC 61024-1, and IEC 61312-1. These considerations are in line with the above-mentioned standards.

IEC	IEC 60364-5-548 (1996-02)	Electrical installations of buildings—Part 5: Selection and erection of electrical equipment—Section 548: Earthing arrangement and equipotential bonding for information technology installations

IEC 60364-5-548 covers earthing and equipotential bonding for ITE installations and similar equipment requiring interconnections for data exchange purposes. ITE is considered to include all forms of electrical and electronic business and telecommunications equipment. Further descriptions of ITE equipment are deferred to IEC 60950. IEC 60364-5-548 may apply to telecom centers, data processing equipment centers, or installations using signaling with earth return in internal connections and external connections to a building.

IEC 60364-5-548 may apply to dc power supply networks serving ITE inside a building, PABX equipment or installations, local area networks (LAN), fire alarm and intruder alarm systems, building services installation such as direct digital control (DDC) circuits, systems for computer-aided manufacturing (CAM), and other computer aided services.

IEC 60364-5-548 does not consider the influence of lightning. It defers lightning influences to IEC 61024-1, IEC 60364- 4-43, and IEC 60364-4-444, which cover protection against overvoltages of atmospheric origin and those due to switching, and protection against EMI in installations of buildings, respectively.

In case of EMI with existing installations of buildings, IEC 60364-5-548 defers to annex A. This annex deals with signaling connections that include a protective earth neutral (PEN) conductor (combined neutral and equipment grounding conductor) or EMI on cabling. Mitigation methods proposed include the use of fiber links for signal connections, class 2 equipment, isolation transformers, and the routing of cable to minimize the enclosed area for common loops formed by supply and signal cables (see also IEC 61000-1-1).

Copyright © 1999 IEEE. All rights reserved.

Copyright by the Institute Of Electrical & Electronics Engineers Inc
Fri Jul 20 10:39:35 2001

IEC	IEC 60950 (1991-10)	IEC 60950-am4 (1996-07) Safety of information technology equipment, including electrical business equipment
Applies to ITE including electrical business equipment and associated equipment, with a rated voltage not exceeding 600 V. Specifies requirements intended to ensure safety for the operator and layman who may come into contact with the equipment and, where specifically stated, for service personnel.		
Institute Of Electrical And Electronics Engineers (IEEE) 345 East 47th Street - New York, NY 10017 - (212) 705 7900 IEEE is a large organization of individual professional membership. IEEE standards are largely composed by group consensus of professional practicing engineers and usually contain a high level of academics and theory. Still, these standards are intended to be guides and applications.		
IEEE	Accredited Standards Committee C2-1997	The National Electrical Safety Code® (NESC®)
The NESC covers electrical power distribution requirements for systems within the responsibility of power, communications, and similar utilities. There are often requirements for (tele)communications wiring within power utility service areas. Most local jurisdictions in the U.S. require adherence to the NESC (some to an earlier version NESC). This code describes the practical safeguarding of persons during the installation, operation, or maintenance of electric supply and communications lines and associated equipment. For building distribution and utilization wiring requirements, see the National Electrical Code® (NEC®) (NFPA 70-1999).		
IEEE	IEEE Std 1346-1998	Evaluating Electric Power System Compatibility with Electronic Process Equipment
This draft document recommends a standard methodology for the technical and economic analysis for compatibility of process equipment with the electric power system. Standardization of terms, data, and performance of power systems and equipment compatibility promote a common frame of reference.		
Information Technology Industry Council (ITIC) 1250 I Street NW - Suite 200 - Washington, DC 20005 - (202) 737-8888		
ITIC (formerly CBEMA)	Information Letter By Power Interface Subcommittee ESC-3 - 6/1993	Guidelines For Grounding Information Technology Equipment
This information letter describes ITIC's understanding of necessary guidelines for grounding power systems and equipment for ITE installations. It heavily depends on the NEC grounding and bonding methods.		

Copyright © 1999 IEEE. All rights reserved.

Copyright by the Institute Of Electrical & Electronics Engineers Inc
Fri Jul 20 10:39:36 2001

International Telecommunications Union (ITU)
United Nations Place de Nations; CH-1211; Geneva 20, Switzerland - 41 22 730 6141

The ITU Telecommunication Standardization Sector (ITU-T) is a permanent organ of the International Telecommunication Union (formerly known as CCITT). The ITU-T is responsible for studying technical, operating and tariff questions and issuing recommendations on them with a view to standardizing telecommunications on a worldwide basis. For U.S. and Canadian locations, see also ANSI T1 and TIA standards.

ITU -T	Recommendation K.27 – May 1996	Bonding Configurations And Earthing Inside A Telecommunications Building

This recommendation is the international consensus on bonding configurations (for equipment) and earthing (grounding) for buildings containing telecommunications digital switching centers. It intentionally utilizes methods to promote EMC. This recommendation may be useful for designing and installing electronic telecommunications into equipment rooms in commercial buildings and industrial locations. A document (in the U.S.) with some similarity in methods is Bellcore TR-EOP-000295.

ITU-T	Recommendation K.31 - March 1993	Bonding Configurations And Earthing of Telecommunication Installations Inside a Subscriber's Building

This recommendation is the international consensus on bonding configurations (for equipment) and earthing (grounding) for commercial and residential buildings containing electronic telecommunications terminal equipment (TTE). It intentionally utilizes methods to protect against electromagnetic disturbances. This recommendation is useful for designing and installing electronic telecommunications into equipment rooms in commercial buildings and industrial locations. A document (in the U.S.) with some similarity in methods is TIA/EIA 607-1994.

ITU	Recommendation K.35 – May 1996	Bonding Configurations and Earthing at Remote Electronic Sites

This recommendation covers bonding configurations and earthing for equipment located at remote electronic sites such as switching or transmission huts, cabinets or controlled environmental vaults with only one level, a need for ac mains power service, and a floor space of about 100 m^2 without an antenna tower on the roof of the building as well as nearby; but are more substantial than small electronic housings, such as carrier repeaters or distribution terminals.

Copyright © 1999 IEEE. All rights reserved.

Copyright by the Institute Of Electrical & Electronics Engineers Inc
Fri Jul 20 10:39:37 2001

National Fire Protection Association (NFPA)
1 Batterymarch Park - PO Box 9101 - Quincy, MA 02269 - (617) 770 3000

The NFPA is the nation's public advocate for fire safety. Since lightning and electrical power are potentially sources of fire, the NFPA prepares and distributes codes on lightning protection and electrical safety to reduce the risk of fire and electrical shock.

NFPA	NFPA 70-1999	National Electrical Code (NEC)

A companion reference is the code-plus-commentary, the National Electrical Code - 1996 Handbook.

NEC Chapter 8—Communications Circuits—covers general requirements for grounding, bonding, and protecting low voltage telecommunications circuits. Chapter 8 is a stand-alone chapter but does reference other articles and sections such as Article 250 on grounding.

NEC Article 250—Grounding—covers, where included in the scope of the code, the grounding and bonding of ac and dc power circuits of less than 600 V. (Higher voltages such as 1000 V and above are also addressed but are atypical for the commercial building.) It is important to be familiar with these requirements, since they must be coordinated with the (tele)communications circuits electrical protection, and grounding and bonding covered in Chapter 8. The same level of familiarity is important for lower-voltage electrical systems, such as in computer rooms, fire alarm circuits, signaling, and security. See Articles 645, 725, 760, 770, 810, and 820 of the NEC.

NEC Article 280—Surge Arresters—covers the selection and connectivity of surge arresters installed on premises wiring systems (electrical power circuits). A surge arrester in the context of this section may also be known as a surge protective device (SPD) or a transient voltage surge suppressor (TVSS).

NOTE—The 1999 NEC update has major changes including a completely reorganized Article 250: Grounding and Bonding. A new appendix cross-references new and old numbers such as section numbers.

Telecommunications Industry Association (TIA)
1201 Pennsylvania Avenue - Suite 315 - Washington, DC 20004-2401 - (202) 383-1480

The TIA, among other services, provides documents on telecommunications. Primary membership is from equipment manufacturers (similar to ITIC). Standards committee TIA TR41 deals with telephone terminals and other related subjects.

TIA	EIA/TIA 571A-1999	Environmental Consideration For Telephone Terminals

This standard describes the environmental considerations for TTE.

Copyright © 1999 IEEE. All rights reserved.

Copyright by the Institute Of Electrical & Electronics Engineers Inc
Fri Jul 20 10:39:38 2001

TIA	TIA/EIA 569-1998	Commercial Building Standard For Telecommunications Pathways And Spaces
This standard describes the requirements for telecommunications pathways and spaces in commercial buildings. Information on grounding and bonding is included, with extensive reference to TIA 607. This standard is part of the TIA series on commercial building standards, which also include standards 568 and 607.		
TIA	TIA/EIA 606-1993	ANSI/Administration Standard For The Telecommunications Infrastructure Of Commercial Buildings
This standard describes the administration requirements for telecommunications in commercial buildings. Information for administering grounding and bonding is included. This standard is part of the TIA series on commercial building standards, which also include standards 568, 569 and 607.		
TIA	TIA/EIA 607-1994	Commercial Building Grounding/Bonding Requirements for Telecommunications
This standard describes grounding and bonding requirements in commercial buildings. Electrical protection, other than that inherently provided by grounding and bonding, is not covered. This standard is part of the TIA series on commercial building standards, which also include standards 568, 569 and 606.		
Underwriters Laboratories Inc. (UL) 333 Pfingsten Road - Northbrook, IL 60062 – 847-272-8800 UL operates laboratories for the examination and testing of devices, systems, and materials to determine their suitability regarding protection from hazard to life and property. UL also publishes standards, classifications, and specifications for materials, devices, products, equipment, constructions, methods, and systems affecting such hazards. UL is an independent nationally recognized testing laboratory (NRTL) and tests products for safety according to their intended application or purpose.		
UL	UL 96 - 1996, Edition 4	Lightning Protection Components
This standard covers lightning protection components for use in the installation of complete systems of lightning protection on buildings and structures. Components are divided into three classes according to their intended application. Class 1 components are for buildings and structures not more than 23 m (75 ft) high. Class 2 components are for buildings and structures more than 23 m (75 ft) high. Class 2 modified components are for use on heavy-duty stacks.		
UL	UL 96A - 1998, Edition 10	Installation Requirements For Lightning Protection Systems
This standard covers the installation of lightning protection components on all types of structures except those structures used for storage or manufacture of ammunition, flammables, and explosives. This standard only applies to complete lightning protection systems. Partial systems are not covered.		

Copyright © 1999 IEEE. All rights reserved.

Copyright by the Institute Of Electrical & Electronics Engineers Inc
Fri Jul 20 10:39:39 2001

UL	UL 467 - 1996, Edition 7	Grounding And Bonding Equipment
This standard covers grounding and bonding equipment, for use in connection with interior wiring systems, in accordance with the NEC. Requirements are given for ground clamps, bonding devices, grounding and bonding bushings, water meter shunts, armored grounding wire, ground rods, and the like.		
UL	UL 497 - 1999, Edition 6	Protectors For Paired Conductor Communications Circuits
This standard covers (primary) protectors for paired conductor communication circuits employed in accordance with Chapter 8 of the NEC. Primary protectors consists of single and multiple pair air gap arresters, gas tube arresters, or solid state arresters, with or without fuses or other voltage-limiting devices.		
UL	UL 497A - 1998, Edition 2	Secondary Protectors For Communication Circuits
This standard covers secondary protectors for use in single or multiple pair-type communication circuits employed in accordance with Chapter 8 of the NEC. Secondary protectors are used in telecommunications networks using an operating rms voltage to ground less than 150 V.		
UL	UL 497B - 1999, Edition 2	Protectors For Data Communication And Fire Alarm Circuits
This standard covers protectors for data communication and fire alarm circuits contained within buildings. These protectors consist of single and multiple pair air gap arresters, gas tube arresters, or solid state arresters, with or without fuses or other voltage limiting devices.		
UL	UL 497C - 1998, Edition 1	Protectors For Coaxial Communication Circuits
This standard covers (primary) protectors for coaxial communication circuits employed in accordance with Chapter 8 of the NEC.		
UL	UL 1449 - 1998, Edition 2	Transient Voltage Surge Suppressors (TVSS)
This standard covers surge suppression products designed for repeated limiting of transient voltage surges on 50 or 60 Hz power circuits. The products are intended for ordinary locations in accordance with the NEC. Surge arresters installed ahead of service entrance equipment are covered in ANSI/C62.1.		

Copyright © 1999 IEEE. All rights reserved.

Copyright by the Institute Of Electrical & Electronics Engineers Inc
Fri Jul 20 10:39:40 2001

UL	UL 1459 - 1999, Edition 3	Telephone Equipment
This standard covers telephone terminals, with few exceptions. It does not cover centralized ac or dc power systems that exceed the limits designated as Level C. A specific section covers equipment powered from centralized dc power systems. Grounding is covered.		
UL	UL 1950 - 1998, Edition 3	Safety Of Information Technology Equipment Including Electrical Business Equipment
This standard is applicable to ITE, including electrical business equipment and associated equipment with a rated voltage not exceeding 600 V. This standard is also applicable to such equipment designed and intended to be connected directly to a telecommunication network and forming part of a subscriber's installation, regardless of ownership or responsibility for engineering, installation, and maintenance. This standard specifies requirements intended to reduce the risk of fire, electric shock, or injury for the operator who may come into contact with the equipment and, where specifically stated, for service personnel.		

Copyright © 1999 IEEE. All rights reserved.

Copyright by the Institute Of Electrical & Electronics Engineers Inc
Fri Jul 20 10:39:41 2001

Chapter 10
Case histories

10.1 General discussion

This chapter presents case histories involving typical problems that have been encountered in the powering and grounding of sensitive electronic equipment. It is hoped that readers will find that the solutions presented will be helpful in solving problems being encountered currently.

Since most of the case histories in this chapter can fit into two or more subject areas, it is suggested that readers peruse related topics as presented in the subclauses that follow.

10.2 Typical utility-sourced power quality problems

Many utilities are located in areas where lightning storms commonly occur during portions of the year. These storms are notorious for causing ground faults on both transmission lines and ac distribution lines. These faults often cause nearby utility-fed electrical equipment to power down.

Utilities try to maintain relatively constant distribution voltages, as their customers' load mix and total power demand vary enormously. In an effort to maintain constant voltage, utilities switch large capacitor banks into and out of their transmission and distribution systems. This switching may result in voltage surges at customer sites.

Case histories of these two primary sources of utility power disturbances are presented below. It should always be emphasized that personnel at sensitive electronic facilities should have a good working relationship with a knowledgeable power quality consultant and with their utility company. Involvement of utility company personnel should not be adversarial, for much can be accomplished by working together to solve the problems.

10.2.1 Voltage sags due to utility fault clearing

Several real-life events can induce phase-voltage-to-ground (or neutral) shorts on the utility ac transmission and distribution system. Thunderstorms, high-wind conditions, and small animals are the primary causes of these short-duration events. The typical utility response is to first reenergize the affected circuit(s). This activity often is successful in clearing the initial line fault, but also produces a momentary sag for other users on the same ac distribution system. The following case studies exemplify this problem.

Problem 1: Nuisance production interruptions during thunderstorms. A plastics film extruding facility was experiencing numerous production interruptions during thunderstorms. Detailed monitoring and analysis showed that adjustable (frequency) speed drive (ASD) motors automatically tripped off-line for voltage sags below 85% of nominal. Equipment

Copyright © 1999 IEEE. All rights reserved.

Copyright by the Institute Of Electrical & Electronics Engineers Inc
Fri Jul 20 10:39:41 2001

downtime logs correlated with the local utility's logs of momentary short circuits on their distribution power line.

Solution. The ASDs were modified for a lower ac input voltage range (changed input threshold from 85% to 75% of nominal voltage). The plant ac distribution voltage, from the step-down transformer supplying the affected equipment, was increased (via changing its tap setting) to a level that allowed the equipment to ride through many of the voltage sags. This voltage change was accomplished without exceeding the maximum allowable voltage (per ANSI C84.1-1989[1]) under normal conditions.

Problem 2: Excessive assembly-line restart times after momentary ac sag conditions. An automobile transmission plant experienced numerous partial stoppages in its production line during thunderstorms. Excessive time was required to restart the affected production equipment (solid-state controllers) and to balance product flow through the total production line. Detailed monitoring and analysis showed that the most sensitive programmable logic controllers ceased functioning when the ac line voltage dropped below 87% of nominal for periods longer then 8 ms. Utility analysis showed that the mean voltage of utility originated sags was 65% of nominal, with a mean duration of 190 ms.

Solution. Since the mean sag voltage was within the operating range of several voltage-regulating transformers, the power quality consultant recommended that voltage-regulating power conditioners be added to power the less sensitive machine tool controllers, and that small, dedicated uninterruptible power supply (UPS) be used to power the critical controllers.

10.2.2 Voltage surges due to utility power-factor/voltage-regulation capacitor switching

Utilities often find it necessary to add/subtract capacitance to their ac transmission and distribution system to achieve reasonable power factors and voltage levels. When these capacitor banks are switched on and off the ac distribution system, they create phase-voltage surges. These surges appear as decaying-oscillatory surges to the user. Examples of the impact of these surges follow.

Problem 1: Nuisance production shutdown of steel mill casting process. This case involves the ASD motors at a steel mill continuous casting plant. The ASD motors drive slabs of molten steel through the casting process. When the ASDs tripped out, molten steel solidified within the casting machines and resulted in considerable production downtime. Detailed monitoring and analysis showed that ac line surges on the feeder to the ASDs had a 600–700 Hz ringing frequency, 0.6 pu (per unit) initial amplitude, and durations of 8–10 ms. The 6 900 V feed to the building showed identical surges.

Solution. The utility added a preinsertion-inductor to their capacitor bank. This inductor is momentarily placed in series with the capacitor bank when the capacitor is switched into the ac distribution system. The inductor prevented further ASD trip-outs, due to utility capacitor

[1]Information on references can be found in 10.11.

Copyright © 1999 IEEE. All rights reserved.

Copyright by the Institute Of Electrical & Electronics Engineers Inc
Fri Jul 20 10:39:42 2001

switching. The switching surge at the ASD (with the preinsertion inductor) had an initial amplitude of 0.2 pu and 1 600 Hz ringing frequency.

Problem 2: Voltage quality concern at radio station—overvoltage. A radio station had been repeatedly frustrated by their new broadcast transmitter's operation because it would enter a failure mode on weekday mornings. The error message on the transmitter that would be displayed indicated that an "overvoltage" had occurred on the ac power line. The local electric utility had offered to provide power line monitoring at the main service entrance to determine the type of disturbance and its amplitude that was affecting the transmitter. The monitoring data had revealed that a utility timer-controlled capacitor bank's operation caused impulsive transients of amplitudes between 130 V and 150 V to randomly appear on one or more phases at a time.

Solution. The radio station's initial solution to the impulsive transients was to install surge suppressors at the input to the equipment to mitigate the events. The devices did not fix the problem and the transmitter continued to shut off during the events. The radio station was eventually convinced that an "in-line" choke that could mitigate the transients should be installed. The devices were installed and the overvoltage at the transmitter's input was reduced to an acceptable level so as to allow the transmitter's reliable operation.

Problem 3: Intermittent shutdowns of ASDs in a manufacturing plant—overvoltage. This case involves a manufacturing plant, located in the southern U.S., where 5 hp ASD motors frequently would trip-out intermittently. The result of these disruptions, on a multistage continuous-processing line, was considerable material loss and excessive line restart time. The ASD diagnostic code typically would indicate an "overvoltage on the ac power" feeding the system. Steady-state, true rms voltage readings on the 480 V, three-phase line were on the low side at 452–479 V. Further measurements correlated voltage surges with utility-level power-factor correction capacitor switching.

Solution. Consultation with the ASD manufacturer revealed that the ASD protection circuitry was sensitive to ac overvoltage conditions for extremely short time periods (e.g., 800 V for 40 μs). The manufacturer solved the problem with the addition of transient voltage surge suppressors, which clamped the ac voltage to less than 750 V.

Problem 4: Shutdowns of ASDs in a manufacturing plant—overvoltage. This case involves a manufacturing plant, located in the Mid-Atlantic States of the U.S., where 5 hp ASD motors frequently would trip-out. The result of these disruptions, on a multistage continuous pharmaceutical manufacturing line, was considerable material loss and excessive line restart time. There was no ASD diagnostic code. Steady-state, true rms voltage readings on the 480 V, three-phase line were on the high side at 482–500 V. This voltage was within the acceptable standard for motor control centers located near the transformer, 480 V ± 10%. The condition also happen during violent changes from hot humid weather to cool, when a fast moving cold front passed through and the utility could not respond fast enough to prevent the voltage from rising.

Solution. Consultation with the ASD manufacturer revealed that the ASD protection circuitry was sensitive to ac overvoltage conditions. The design of the ASD was for a normal input

Copyright © 1999 IEEE. All rights reserved.

Copyright by the Institute Of Electrical & Electronics Engineers Inc
Fri Jul 20 10:39:44 2001

voltage of 460 V, which is the voltage for the motor location, not the motor control center. At 480 V input to the ASD the dc bus would be 800 V dc, where the overvoltage was set to trip. The manufacturer declined to resolve the problem.

Several manufacturers of transient voltage surge suppressors were consulted. However, this was not a transient condition, but a continuous normal supply voltage condition that the ASD could not tolerate. What was overlooked by the ASD manufacturer was the fact that ASD are usually placed at or in the motor control centers. The IEEE standards define the motor control center as a point where 480 V is normal and at the motor 460 V is the norm. It was decided to change the taps on the supply transformers since the voltage drop throughout the facility was minimal.

Problem 5: Repeated computer lockup and component failures in CT scan equipment at a medical clinic. Monitoring input of the 480–208 Y/120 V, three-phase transformer feeding the CT scan equipment revealed surges characteristic of utility power-factor correction switching (decaying oscillatory waveform). Monitoring of the output of the same transformer showed a reduced surge, but still sufficiently severe to cause operational failure of the CT scan equipment.

Solution. Detailed analysis of the surges showed a characteristic ringing frequency of 1.0–1.5 kHz. This allowed the specification of an active-tracking filter, specifically designed for this type of surge, to be installed.

10.3 Premises switching generated surges

The majority of ac voltage surges experienced at intermediate-sized and large user sites have been found to originate within the site itself. Switching of reactive loads is the primary cause of such surges. Below are examples of these switching surges.

Problem 1: Notching surges on the ac distribution system. After installing a 1000 hp solid-state dc drive, a manufacturing plant began to have operating problems with existing solid-state equipment, connected to the same 480 V, three-phase distribution system. The distribution system supplying the dc drive was an ungrounded system. Operational problems of the nearby electronic equipment were attributed to the line-voltage notching. These notches were caused by the new solid-state dc drive.

Line-voltage notching is produced during motor-control commutation. When the current flowing in one phase suddenly stops and this same current suddenly starts to flow in a different phase, a voltage notch occurs. Since the line has finite inductance, which prevents instantaneous changes in current flow, a momentary short-circuit occurs between phase and ground during this transition. Actually this is a commutation of one silicon-controlled rectifier (SCR) off by turning on another SCR, resulting in brief short circuit until the SCR commutates off.

Solution. A shielded isolation transformer was installed on large dc drives to isolate their commutation-produced ac line voltage notching from other voltage sensitive solid-state

Copyright © 1999 IEEE. All rights reserved.

Copyright by the Institute Of Electrical & Electronics Engineers Inc
Fri Jul 20 10:39:45 2001

equipment. The shielded isolation transformer acted to reduce the commutation. (See IEEE Std 519-1992 [B2].)[2]

Problem 2: Solid-state ASDs. A manufacturing facility could not keep their ASD motors running. The input fuses on the ASDs were open-circuited on a regular reoccurring basis. A log of the ASD fuse failures was made. This was compared to the utility outages and other external causes. The result of the comparison indicated numerous unaccounted fuse failures. A digital power disturbance analyzer was installed and used to indicate the power quality at the drives.

The disturbance analyzer indicated a high concentration of power disturbances. These disturbances were mostly phase-neutral voltage surges, originating from within the building. Significant neutral-ground voltages were also observed. The disturbances were being generated primarily by the ASDs themselves, and causing other nearby ASDs to malfunction.

Solution. Shielded isolation transformers and transient voltage surge suppressor (TVSS) devices on each ASD solved the problem.

10.4 Electronic loads

Electronic loads are generally nonlinear which results in the generation of harmonic currents. These harmonic currents circulate within the ac distribution system, which supplies power to the electronic loads. These harmonic currents contribute to I^2R heating within the ac distribution system and can cause considerable voltage waveform distortion. Below are case studies that deal with harmonic currents and their impacts on the ac distribution system.

10.4.1 Uninterruptible power supply (UPS)—unfiltered input

Static UPSs are nonlinear loads on the ac distribution system, and as such they generate and feed back harmonic currents into the ac distribution system. These harmonic currents can negatively impact other sensitive electronic equipment on the same ac distribution system.

Problem: Office copier lock-up and laser printer data errors. A southwestern university constructed a new classroom facility near two existing (large) computer room UPSs, and fed the new facility from the same ac distribution that fed the UPSs. Office equipment, with high-current-consuming electronically controlled heaters in the new classroom facility, experienced repeated data errors and often lock-up. User personnel were able to make the office equipment temporarily operational by switching off and on the ac power to the equipment. No equipment damage occurred.

After minor miswirings were corrected in both the neutral and equipment grounding conductors, power quality analyzer results showed that severe phase voltage notches (from the UPS) and common-mode noise voltages ranged from 5–35 V. Initial attempts to solve the problem

[2]The numbers in brackets correspond to those of the bibliography in 10.12.

Copyright © 1999 IEEE. All rights reserved.

Copyright by the Institute Of Electrical & Electronics Engineers Inc
Fri Jul 20 10:39:46 2001

with a nonoptimized (50 dB) filtering circuit, normal- and common-mode TVSS, a shielded isolation transformer, and a dedicated (line interactive) UPS failed.

Solution. Additional waveforms captured by the power quality analyzer showed that the line interactive UPS did succeed in eliminating the phase voltage notches, but since its design did not bond its output neutral with the equipment grounding conductor, it was ineffective in reducing the common-mode noise. Conversely, the shielded isolation transformer was shown to be effective in reducing the common-mode noise, but not the phase voltage notching. Armed with this data the power quality consultant recommended that a device be employed that could both regenerate the phase voltage and establish a local neutral-ground bond. Installation (near the sensitive equipment) of a simple ferroresonant transformer, with its secondary neutral bonded to the equipment grounding conductor, and TVSS, allowed for error-free operation of the office equipment.

10.4.2 UPS—unfiltered output

Static UPSs, not equipped with sufficient output filtering, supply their loads with harmonic-rich voltage waveforms, and are generally unable to fully filter harmonic currents generated by their electronic loads. This situation may result in both the misoperation of load equipment and overheating of components in the UPS output distribution system.

Problem: Semiconductor production test equipment malfunction. A major semiconductor manufacturer was experiencing erratic yields from a group of wafer-level production testers. Initially, power issues were not suspected due to the testers being supplied from a UPS.

A power analyzer indicated that the UPS was supplying power with a high level of voltage distortion to the test equipment. The problem was confirmed when the equipment feed was switched to an adjacent utility source and the tester immediately started logging repeatable results.

Solution. The UPS manufacturer added to the output voltage feed a 5% total harmonic distortion (THD) filter to the existing installed UPS, and it showed the same repeatable test results as attained when the tester was powered by normal utility power.

10.4.3 Automated office

Automated offices have, as a significant fraction of their total electrical power consumption, nonlinear load equipment. This includes such equipment as computers, terminals, printers, copiers, and facsimile machines. All the triplen-harmonic currents generated by this equipment are returned on the neutral conductors (between the electronic loads and their separately derived source) of the ac distribution system. Historical practice has been to reduce the size of ac distribution neutral-conductors. Present usage patterns of automated office equipment can be at odds with the original ac distribution system design assumptions, which may result in misoperation of sensitive electronic equipment and excess heating of ac distribution elements.

Problem 1: Intermittent data memory errors and data transmission errors between remote terminals and a central computer system. In the installation of a multistory office building,

Copyright © 1999 IEEE. All rights reserved.

Copyright by the Institute Of Electrical & Electronics Engineers Inc
Fri Jul 20 10:39:47 2001

several floors of modular workstations were powered from a common, three-phase, step-down transformer with a shared neutral. Mainframe terminals in these workstations experienced intermittent data memory errors and data transmission errors, and occasionally experienced hardware failures.

The power quality analyzer showed that considerable (and variable) neutral current existed and that the neutral-ground voltage mirrored the neutral current flow. Root-mean-square (RMS) values of neutral-ground voltage did not exceed 3.7 V, but the peak voltage ranged up to 10 V, which was well above the logic and signal voltage levels. The analyzer also showed phase voltage switching surges up to 800 V.

Solution. Each floor of the building was isolated into two sections via shielded isolation transformers, with TVSS. Individual neutral conductors were installed for all workstation branch circuits. Reestablishment of the neutral-ground bond at the new isolation transformers, combined with the reduced neutral current in the dedicated neutrals, reduced neutral-ground voltages to less than 2 V.

Problem 2: Engineering laboratory with offices adjacent. The computer system used by laboratory personnel had intermittent failures and data errors. Typically, the misoperations would start around 10:00 A.M., but the timing was variable, and on some days there were no failures at all.

Power quality analyzer measurements showed very regularly timed repetitive sags in the phase voltage, beginning just after 10:00 A.M. Close analysis of the data showed corresponding surges between neutral-ground conductors. Additional investigation located a laser printer in a nearby office, whose "print fusing heater" switched on approximately every minute. The high current demand and resulting voltage developed between the neutral and equipment grounding conductors caused the computer system data errors.

Solution. The offending laser printer was moved to another branch circuit thereby eliminating its interaction with the computer system's neutral conductor.

10.4.4 Interaction between power-factor/voltage-regulation capacitors and electronic loads

Harmonic currents generated within electronic loads can result in excessive heating of ac distribution and transmission components. In severe cases, the excess currents result in ac distribution or ac transmission system malfunctions.

Problem 1: Excessive failures of utility capacitor bank overcurrent protectors. An industrial plant, supplied from two parallel transformers totaling 7500 kVA, has an 1800 kvar capacitor bank for voltage regulation. The electric utility had experienced two main problems with their capacitor bank:

Copyright © 1999 IEEE. All rights reserved.

Copyright by the Institute Of Electrical & Electronics Engineers Inc
Fri Jul 20 10:39:48 2001

a) The capacitor circuit breaker overheated, with temperatures exceeding 70 °C, and

b) Both 100 A individual capacitor can fuses and 3000 A main line fuses were blowing.

The harmonic content of the load current varied continuously. The 5th harmonic was by far the largest at 1080 A. This was approximately 23.5% of the 4600 A fundamental current.

Although the resonant frequency of the system is close to the 6th harmonic, the 5th harmonic current increased in the capacitor by a factor of 2.5, or 2700 A. With the 5th harmonic current alone, the total rms current in the capacitor was 64% higher than the fundamental current of 2077 A, and greater than the ampere rating of the capacitor fuses! These conditions were bad enough, but at the customer's peak load current of 6400 A (30% higher) the conditions were worse.

Solution. Since the plant personnel were unwilling to spend any money to reduce the 5th harmonic, the utility had to remove the capacitors. This resulted in the voltage regulation at the plant to be significantly worse. A more correct solution would have been to add filtering for the 5th harmonic current, and to assess the voltage capabilities of the existing power factor correction capacitors.

10.5 Premises-wiring-related problems

Many of the power quality problems found in service industry facilities are associated with faulty premise wiring. Below are identified major types of premise-wiring-related problem areas.

10.5.1 Service problems

Problem: Neutral fluctuations due to poor connections. A shopping center had complaints about lights flickering in two of the businesses. The customers are served from a 120/208 V overhead bank of transformers. Two service risers feed metering troughs with six customers on each.

A utility line crew had replaced a transformer in the bank a few weeks prior to the call because a neutral bushing had burned up. A distribution engineer had spoken with all tenants in the shopping center and only two had noticed any problems since the transformer had been replaced. These tenants included a restaurant that had lighting with dimmer switches, and a clothier who only noticed the problem in the bathroom when the fan was running.

The engineer had visited the shopping center on three different occasions and had only noticed a flicker one of the times. Initial voltage readings indicated 125 V, L-N on all three phases. Finally, a voltage recorder was installed to monitor the voltage on the service panel in the clothier shop (see Figure 10-1).

Solution. The recording voltmeter data indicated a bad neutral connection because of the high- and low-voltage readings on different phases. The voltage readings were normal for several hours before the neutral shift occurred. Further investigation by the line crew found

Copyright © 1999 IEEE. All rights reserved.

Copyright by the Institute Of Electrical & Electronics Engineers Inc
Fri Jul 20 10:39:49 2001

that there was a bad connection on the four-hole pad that connected the main service neutral to the service conductors. Apparently, the connection had heated up when the neutral bushing had failed earlier.

Only the customers who had incandescent lighting had been able to notice the problem.

Complaints such as lights flickering, or lights getting bright and dim, are usually related to loose connections and/or the cycling of heavy loads. Connections can be checked with the use of a voltmeter or an infrared scanner.

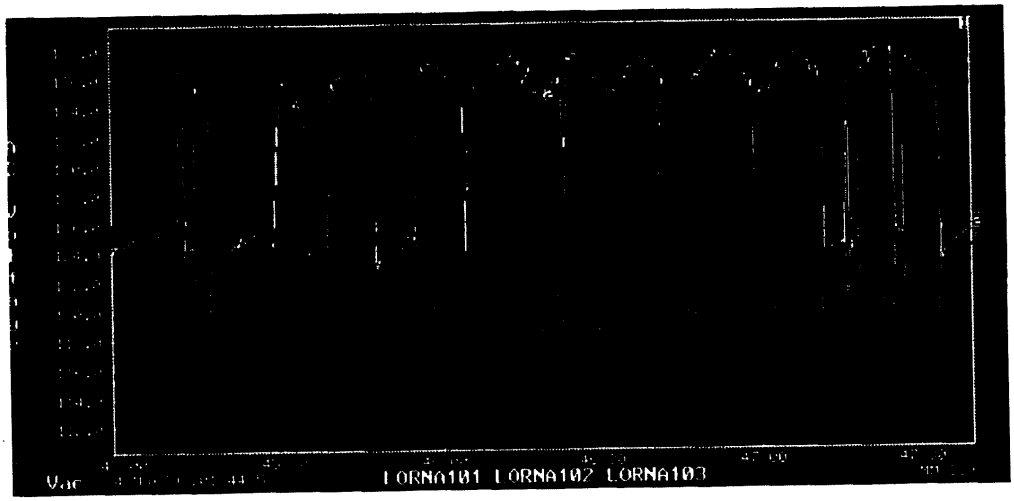

Figure 10-1—Voltage profile

10.5.2 Feeder and branch-circuit level miswiring

Problem: Ground conductor on outside of conduit. A computer manufacturer required the electrical contractor to install #4 AWG insulated ground wire on the outside of the conduit, which carried its associated electrical power conductors. The insulated ground wire was tie-wrapped to the conduit. The manufacturer wanted the ground wire to be separated from the power conductors, yet he wanted to use the same ground wire. The electrical inspector rejected this installation on the basis that the impedance was increased. The National Electrical Code® (NEC®) (NFPA 70-1999) requires a sufficiently low impedance to trip the circuit.

Solution. The recommended practice is to have the ground conductor on the inside, not the outside, of the conduit. When this change was implemented, the electrical inspector approved the installation.

10.5.3 Receptacle level miswiring

Problem 1: Miswired receptacle on personal computer. An automobile parts store was having difficulty getting their personal computer to operate. The personal computer would frequently lock-up or experience other unexplained failures. A check of the utility company's outages

Copyright © 1999 IEEE. All rights reserved.

Copyright by the Institute Of Electrical & Electronics Engineers Inc
Fri Jul 20 10:39:50 2001

did not reveal any correlation between them and the equipment problems. The power outlet serving the computer was examined for polarity, revealing that the phase and the neutral conductors were reversed at the receptacle.

Solution. Once the conductors were correctly connected, the personal computer in the automobile parts store ran without any problems.

Problem 2: Miswired personal computer power strip—improper grounding connections. A school's computer lab was experiencing erratic reboots and lock-ups of it's network computer system. After installation of a power line analyzer the problems stopped. When the monitor was removed they returned. A different-type monitor by the same manufacturer was installed. It recorded many neutral-ground impulses on top of an over 40 V neutral-ground waveform.

The lab had been recently built and professionally wired with dedicated circuits to the file servers. All three servers were fed from the same surge suppressor strip. By analyzing the accompanying N-G impulse waveform (see Figure 10-2), it was easy to see the ground connection is missing.

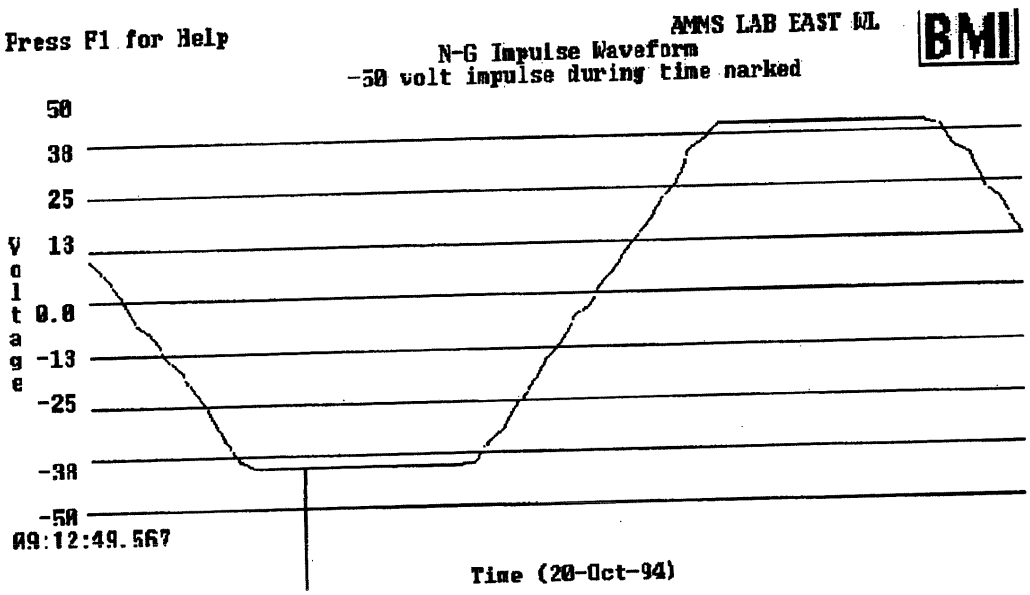

Figure 10-2—Neutral-to-ground impulse waveform

Solution. After disassembling the surge suppressor (see Figure 10-3), it was found that the green wire was soldered to the metal case of the strip. The connection of the ground pin was then made through a spring connection to the removable back of the suppressor case. This might have been adequate if the inside of the back of the suppressor had not been painted. The paint resulted in no ground connection being made.

Copyright © 1999 IEEE. All rights reserved.

Copyright by the Institute Of Electrical & Electronics Engineers Inc
Fri Jul 20 10:39:52 2001

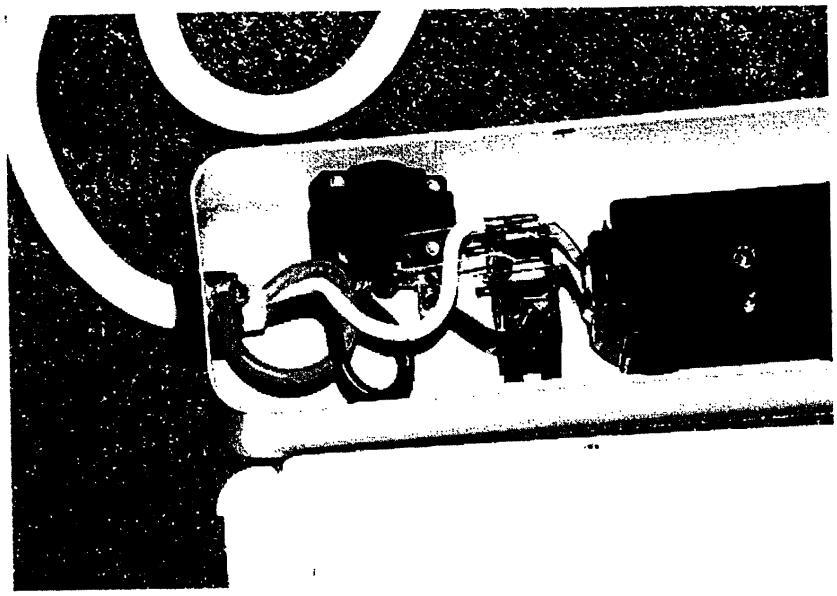

Figure 10-3—Disassembled surge suppressor

The first analyzer was powered from a correctly wired wall outlet. The monitor cord was plugged into the problem surge suppressor strip, thereby providing a temporary, inadvertent ground path through the monitor. So, as long as the meter was installed, the computers worked fine. The second analyzer was plugged into and powered from the defective surge suppressor strip. This allowed for no stray ground paths and resulted in detection of the problem.

The strip was replaced and the problem was solved.

Problem 3: Telephone company (telco) equipment lightning damage. A midwestern industrial company had experienced lightning damage to their telephone equipment, which would result in varying duration of phone service interruption. The phone company that was responsible for the maintenance of the telephone equipment was replacing an average of $40 000 of printed circuit boards at the conclusion of every thunderstorm. Typically, the customer would pay for lightning damage, however, the salesperson for the phone company had written a nine-year lightning "waiver" which rest all liability for lightning damage with the phone company.

The phone company suspected that improper grounding of the telco equipment and its peripherals may have caused voltage drops within the facility, which would account for the equipment destruction. A two-point bonding measurement was made between all available grounding electrode terminations at the site. This testing revealed that an effective, low-resistance bonding existed between electrode terminations. However, the site still continued to experience lightning damage to the telco equipment.

Copyright © 1999 IEEE. All rights reserved.

Copyright by the Institute Of Electrical & Electronics Engineers Inc
Fri Jul 20 10:39:53 2001

Solution. Later investigations unveiled that the conductor used to connect the telephone lightning protectors grounding terminals to an earthing reference was found to be coiled up with approximately 12.2 m (40 ft) of wire (see Figure 10-4). It is likely that the length and routing of this conductor created an excessive amount of impedance, which may have rendered this path for lightning dissipation ineffective for the travel of high-frequency, high-energy surge currents. The routing of the conductor was simply altered to allow the shortest, and most direct, path possible to an earthing reference. The customer has not experienced any damage to the telephone equipment since the changes.

Figure 10-4—Excessive grounding conductor coil

10.5.4 Ground-fault circuit interrupter problems

Problem: Capacitor bank switching. An industrial facility, served from a wye-connected 12.5 kV service and grounded through a resistor, had two 3600 kvar capacitor banks for voltage regulation. Plant personnel complained that a feeder circuit breaker would trip periodically from a ground fault relay. They would spend time inspecting the equipment downstream for ground fault but could never find the cause. After considerable investigation, the problem was discovered to be caused by the capacitor bank. Transient overvoltages created from capacitor switching would sometimes be high enough to cause a TVSS device on the high side of one of the downstream transformers to operate. The power-follow-through current through the TVSS device was enough to cause the ground relay to operate.

Solution. After checking for a defective relay, consulting the coordination study, and reviewing the settings the easiest solution was to raise the current setting on the ground fault relay,

Copyright © 1999 IEEE. All rights reserved.

Copyright by the Institute Of Electrical & Electronics Engineers Inc
Fri Jul 20 10:39:53 2001

providing the increase does not render the relay useless. Another solution would be to increase the time delay.

10.5.5 Ground discontinuity

Problem 1: Lightning and isolated grounding systems. In an area experiencing several short lightning storms a day, erratic computer operation was occurring within a large office building. The grounding conductors of all the computers in the building were insulated from all other conductors, bused together at a single location, and then carried out of the building to a grounding electrode system. This isolated grounding electrode system consisted of six rods driven into the earth away from the building. Power quality monitor measurements indicated that voltages were being developed between the building grounding system and the isolated computer ground. A code analysis showed that the grounding configuration was in violation of the NEC, and was a definite safety hazard.

Solution. The computer manufacturer was persuaded to permit grounding of the computer system to the building grounding system, which had a concrete-encased grounding electrode. Immediately, the erratic operation of the computer system ceased, and the safety hazard was eliminated. It is important that all ground wires be routed with power conductors as specified by the *IEEE Green Book*, IEEE Std 142-1991 [B1]. Routing the ground wires with the power conductors increases the reliability and reduces the impedance of the fault circuit.

Problem 2: Multiple grounds—electronics damaged due to lightning. A residential customer in the Southeast complained of repeated television and VCR damage. The local utility engineer investigated using a true RMS multimeter. The voltage was found to be approximately 120 V on three different occasions.

The utility line crew investigated also. They found all connections on the transformer pole and at the service entrance to be correct and secure.

After coming to a dead end, the engineer called in the power quality engineering group. The customer said that in each case the damage was on the same day as a summer thunderstorm, which resulted in numerous lightning strikes in the area. Upon inspection of the site, it was found that the home was served by a local cable television system. There were no surge protection devices installed by the customer.

Solution. The power quality engineer found that there were two ground rods at the home. One was installed by the local electrical utility and the other was installed at the opposite end of the home by the cable company. These two ground rods were not bonded together as required by Section 820-40(b-d) of the NEC. The cable television conductor, and electrode if one exists, shall be bonded to the structure grounding electrode system or equivalent as stated in the referenced code sections. It was not.

Having two different, unbonded grounding electrodes sets up a potential difference which caused damage to sensitive electronic loads, which in this case was an entertainment system. When lightning occurred, current flowed from one grounding electrode to the other through the television, resulting in damaged circuits (see Figure 10-5.)

Copyright © 1999 IEEE. All rights reserved.

Copyright by the Institute Of Electrical & Electronics Engineers Inc
Fri Jul 20 10:39:55 2001

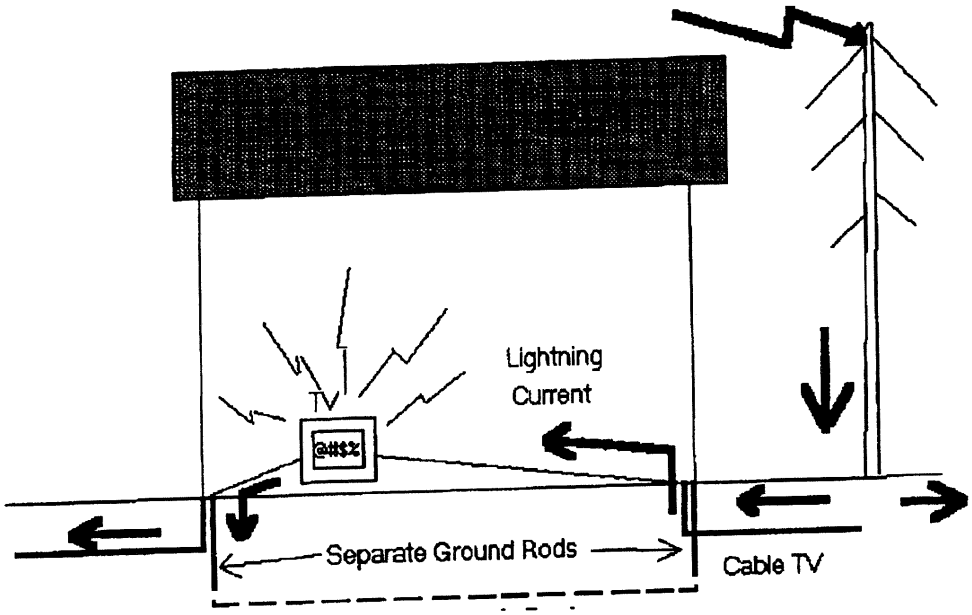

Figure 10-5—Lightning and ground rods

By installing a good UL 1449-rated TVSS (see UL 1449-1996 [B3]) with both power and cable inputs and having the cable company bond the two electrodes with #6 copper or larger, the problem was solved.

Problem 3: Multiple buildings, common signal conductors. Four separate but nearby buildings contained the control for a series of chemical processes. Each building housed a computer for process control. There was some interconnection between data circuits of the computers in adjoining buildings. Each of the four computers was separately grounded to the structural steel grounding system of its building. Operation of the computer systems was erratic.

Solution. The responsible plant engineer chose to replace the interconnecting datalines with fiber-optic communication links. The optical fibers were buried in plastic conduits and the interface electronics in each building were grounded with their respective power grounding means.

Problem 4: Computer graphics system—ground potential difference on the data lines. A computer-aided design/computer-aided manufacturing (CAD/CAM) graphics system, installed by a computer graphics vendor, links a central processing unit (CPU) to remote terminals in separate buildings. No direct lightning strikes were reported, yet extensive damage was done to the circuit boards on terminals and the CPU inputs. Power surges, transient voltage surge, were suspected and precautions were taken, but they did not help. Isolation transformers were installed but, again, did not help.

Copyright © 1999 IEEE. All rights reserved.

Copyright by the Institute Of Electrical & Electronics Engineers Inc
Fri Jul 20 10:39:56 2001

The data cables had been run in plastic underground conduit with only one end of the shield grounded and the other end left floating. High voltages were produced between the floating end and its local ground. The problem was not in the power line surges, but the differential ground potentials. The opto-isolators did not isolate the problem since local power transformers to the opto-isolators closed the loop.

Solution. The solution was to tie the floating end to ground through a TVSS device. This allowed short rise-time surges to be conducted to ground, without establishing a ground loop. A better solution would be to use a dual-shielded cable, its outer-shield grounded at both ends and its inner-shield grounded at one end, with a TVSS device (connected to ground) at the other end. If data integrity is an absolute requirement, metallic connections should be avoided for data links spanning remote terminals.

Problem 5: Computer-aided industrial control—ground potential differential on power lines (absence of ground window). A novel adaptive control system, using microprocessor-based sensors and phase-control of power thyristors, had suffered system crashes and memory component damage on repeated occasions. Suspicions developed that there were some correlations between the crashes or damage and the operation of another developmental power system in an adjacent laboratory.

A review of the total power system revealed the existence of ground loops. On one side, the power supply for the computer and some signal processing circuits were obtained from the room outlets of the laboratory 120 V system, including the grounding conductor (green

Copyright by the Institute Of Electrical & Electronics Engineers Inc
Fri Jul 20 10:39:57 2001

10.6 Transient voltage surge suppression network design—primary and secondary network design

Problem: Special case—severe surge environment. During the initial startup of a solid-state motor drive in a chemical processing plant, difficulties arose with the varistor and its protective fuse at the input of the thyristor circuits. Frequent blowing of the input power fuse was observed, with occasional failure of the varistor. The plant substation, fed at 23 kV from the local utility, included a large capacitor bank with one-third of the bank switched on and off to provide power factor and voltage regulation. These frequent switching operations were suspected of generating high-energy transients that might be the cause of the failure of the fuses and varistors, because literally thousands of similar drive systems have been installed in other locations without this difficulty. On-site measurements indicated that indeed the fuses and varistors were not matched to their environment.

Solution. Immediate relief was secured by the installation of a larger varistor at the same point in the circuit. Long-term protection was obtained by the addition of a gapless metal-oxide varistor on the primary side of the step-down transformer feeding the drive.

This case history illustrates how surge protection devices that are successfully applied for the majority of cases can fail when exposed to exceptionally severe surge environments. It also shows how little attenuation occurs, at the frequencies produced by switching surges, between the distribution level (23 kV) and the utilization level (460 V) even though a long line and two step-down transformers exist between the source of the transient and the point of measurement.

In addition to the proposed upgrading of protection at the 460 V level, three other remedies could be considered:

a) Installation of surge arresters at the intermediate voltage level (4160 V), installation of surge arresters at the 23 kV level; or

b) A change in the circuits involved in the capacitor switching, designed to reduce the severity of the transients at their origin.

(This solution can be considered site-specific, and the solution applies only to this problem at this site. Care should be exercised in applying this to other sites.)

10.7 Typical radiated EMI problems

Problem 1: Computer monitor with wavy screen distortion. A high-resolution computer monitor was experiencing a wavy/quivering screen distortion. Magnetic field measurements showed the 60 Hz field in the vicinity of the monitor was about one order of magnitude higher than elsewhere in the office. An inspection of the area revealed that a subpanel (magnetic field source) was located on the other side of the wall next to the monitor.

Copyright © 1999 IEEE. All rights reserved.

Copyright by the Institute Of Electrical & Electronics Engineers Inc
Fri Jul 20 10:39:57 2001

Solution. The user moved the monitor approximately 1.2 m (4 ft) away from the back of the subpanel, where the magnetic field strength was at a nondisturbing level.

Problem 2: Computer monitor with wavy screen distortion. High-resolution computer monitors were experiencing wavy/quivering screen distortions. The office, located in an old row house with a basement, used computers to generate advertising material. Magnetic field measurements showed the 60 Hz field in the vicinity of the monitor was about one order of magnitude higher than elsewhere in the office. An inspection of the basement area revealed a copper water pipe next to the basement ceiling, directly under the floor (magnetic field source).

The NEC requires the copper piping of the building to be connected to the identified conductor, commonly referred to as the neutral. The identified conductor is to be bonded to the grounded conductor at the service entrance per Section 250-104 of the NEC. One or more of the houses served from the transformer probably had a poor neutral connection. The neutral return current from some other location, was flowing back over the water piping of the house containing the computers.

Solution. An insulating bushing was placed in the copper water pipe line near the point of the pipe exiting the house. The insulating bushing interrupted the flow of return current over the ceiling mounted water pipe. This solution required the evaluation of the possibility of a voltage gradient between any outside water pipe spigot and the earth. This type of modification to the grounding system being performed, however, is not the preferred solution.

The preferred solution is to find the wiring error. However, this can be time consuming and costly. The problem is likely to be in the method the utilities use to supply electric power, using the messenger to serve also as the neutral and the grounding means. Since several locations may be served from the same transformer, it is likely that one of the other locations have a faulty messenger/neutral/ground connection resulting in the current flowing back over the problem location's messenger/neutral/ground conductor.

The installation of a neutral blocker in the service is another solution. The neutral blocker will force the current to flow over some other path. The final solution is to serve all locations with four-wire, two- or three-phase conductors; an isolated, insulated neutral; and a ground/messenger conductor.

10.8 Typical electrical inspection problems

The incidents related are very brief. As far as the electrical inspector was concerned, these examples were open and shut cases of direct NEC violations. Because the inspector was familiar with the problems associated with incorrect installations of sensitive electronic equipment and NEC violations, all computer installations were closely inspected.

Since it is not unusual for many sections of the NEC to be violated in the examples cited, and due to the fact that the NEC is revised and the section numbering may change, exact sections are not cited.

Copyright © 1999 IEEE. All rights reserved.

Copyright by the Institute Of Electrical & Electronics Engineers Inc
Fri Jul 20 10:39:59 2001

Problem 1: Automated cash register and checkout. A large food market had installed an automatic scanning checkout counter and cash register. The installation specifications called for each checkout counter installation to be isolated from all other building grounds. Under each checkout counter a separate (isolated) ground rod was to be driven and used for the equipment ground for that counter.

Each checkout counter had a motor driving a conveyor. This motor was to have its ground removed and connected to the ground rod under the counter. Should a fault occur in the motor winding, which is very likely, a high-impedance ground-loop would exist and prevent the protective device from operating. The failure of the protective device to operate would place potential on the checkout counter presenting a shock and fire hazard.

Not only was this unsafe, but the NEC requires all equipment and enclosures to be connected to the same "common grounding electrode." Also, the NEC requires a "sufficiently low impedance to facilitate the operation of the circuit protective devices in the circuit."

Solution. The inspector did not issue an occupancy permit until all the isolated grounds were interconnected.

Problem 2: Insulated-ground receptacle. A new ten-floor office building had installed, from the basement to the top floor, a 1/4 in × 1 in copper bus bar. The bus bar was insulated. Isolated, insulated-ground receptacles were to be used for the computer installation. The receptacle ground terminal was to be connected to this bus bar. The bus bar was connected to a ground rod, which was driven through the basement floor. The object of this misguided design was to offer ground isolation from any other ground system within the building.

The NEC allows "a receptacle in which the grounding terminal is purposely insulated from the receptacle mounting means" to reduce electrical noise, and electromagnetic interference. However, "the receptacle grounding terminal shall be grounded by an insulated equipment grounding conductor run with the circuit conductors. This grounding conductor shall be permitted to pass through one or more panelboards without connection to the panelboard grounding terminal ... so as to terminate directly at an equipment grounding conductor terminal of the applicable derived system or service."

Solution. An impasse developed and the building remained unoccupied until the isolated, insulated-ground receptacles were rewired according to the NEC.

10.9 Typical life-safety system problems

Problem: False alarms on smoke/fire detector system. A large office/data processing facility was experiencing numerous false alarms on the smoke/fire detection system. It was determined that the cause of the false alarms emanated from a local smoke detection panel in a computer room. Further investigation revealed that room temperature thermostats were connected to the local panel and used as a local alarm. When the computer room temperature exceeded 25 °C, the local panel went into alarm, causing the main building panel to go to an alarm status with all the fire bells sounding throughout the facility.

Copyright © 1999 IEEE. All rights reserved.

Copyright by the Institute Of Electrical & Electronics Engineers Inc
Fri Jul 20 10:40:00 2001

Solution. The computer room thermostats were removed from the smoke detection panel. A

Copyright by the Institute Of Electrical & Electronics Engineers Inc
Fri Jul 20 10:40:01 2001

Copyright by the Institute Of Electrical & Electronics Engineers Inc
Fri Jul 20 10:40:01 2001

Copyright by the Institute Of Electrical & Electronics Engineers Inc
Fri Jul 20 10:40:02 2001

lock-up, case history, 379–380

and materials specification and selec-

Copyright by the Institute Of Electrical & Electronics Engineers Inc
Fri Jul 20 10:40:03 2001

Copyright by the Institute Of Electrical & Electronics Engineers Inc
Fri Jul 20 10:40:03 2001

overview, 227, 258
power correction devices, 228–244
computer power distribution units (PDU), 239
harmonic current filters, 229, 232–233
isolation transformers, 228–231
noise filters, 228–229, 232
power line conditioners, 229, 236–239
standby power systems (battery-inverter type), 228, 230, 239–241
surge suppressors, 229, 233–234
uninterruptible power supply (UPS), 228, 230, 241–244
voltage regulators, 228–229, 234–236
unique or special, avoiding, 258–259
conflicts with standard products, 259
electrical safety listing avoidance problems, 259
increased liability problems, 259
long-term maintenance problems, 259
unknown performance and reliability characteristics, 259
vendor-supplied, 258
verification testing, 260–262
ac input failure and return test, 262
efficiency test, 262
harmonic component test, 222, 262
load imbalance test, 262
load performance test, 262
load tests, 261–262
overload capability test, 262
synchronization test, 261–262
transfer test, 261
visual inspection, 261
Equipment grounding, 319–324
isolated ground configuration, 320–324
standard equipment ground configuration, 319–320
Equipment grounding bus considerations, switchboards and panelboards, 293
Equipment grounding conductor
definition of, 7
impedance, measuring, 201–203
Equipment maintenance. *See* Maintenance, equipment
Equipment room wiring and grounding, 273
Equipment selection and installation considerations, 284–305. *See also* Equipment and materials specification and selection
busways, 297–298
cable tray systems, 304–305
circuit breakers, 293–295
interrupting ratings, 295
trip units, 294
conductors, 296–297
equipment grounding conductors, 297
neutral conductors, 297
phase conductors, 296–297
dry-type transformers, 284, 286–291
conventional *versus* K-factor rated transformers, 290–291
derating conventional transformers, 289–290
electrostatic shield considerations, 288
grounding methods, 286
impedance considerations, 286
K-factor rated transformers, 288–289
location, 286
temperature sensor considerations, 288
wiring methods, 286
fuses, 295–296
blown fuse indicators, 295–296
interrupting ratings, 296
safety switches, 295
metal-clad cable, 303–304
power enhancement devices, 302–303
pull boxes and junction boxes, 302
raceways, 299–302
conduit fittings, 301–302
conduit supports, 300–301
electrical metallic tubing, 300
flexible metal conduit, 300
rigid metal and intermediate metal conduit, 300
switchboards and panelboards, 291–293
equipment grounding bus considerations, 293
location, 291
neutral bus considerations, 292–293
overcurrent protective device considerations, 291–292

Copyright © 1999 IEEE. All rights reserved.

Copyright by the Institute Of Electrical & Electronics Engineers Inc
Fri Jul 20 10:40:04 2001

Equipment selection and installation considerations (*Continued*)
switchboards and panelboards (*Continued*)
surge protective device considerations, 293
wiring devices, 298–299
single-phase receptacles, 298
three-phase receptacles, 298–299
Equipotential plane, 152
ESD. *See* Electrostatic discharge
European Community 1996 electromagnetic immunity requirements, 271
European Telecommunications Standards Institute (ETSI), 366–367
Event indicators, 184–185
Expanded radialy system, 275
Expert systems, 189–190

F

Facility planner's considerations, 244–248
Failure, degradation
definition of, 7
capacitive (electrostatic) coupling (near field), 120–121
inductive (magnetic) coupling (near field), 117
magnetic field strength around conductor in free space, 117–120
Frequency
deviation, definition of, 7
equipment tolerances, 217
variations, 26
Fundamentals of powering and grounding electronic equipment, 61–168
grounding subsystems. *See* Grounding subsystems
high- and low-frequency regimes defined, 78–83
basic current loop, 78–79
small and large circuits, 80–83
velocity of propagation, 79
impedance considerations. *See* Impedance
load and power-source interactions. *See* Load and power-source interactions
overview, 61

Copyright by the Institute Of Electrical & Electronics Engineers Inc
Fri Jul 20 10:40:04 2001

Copyright by the Institute Of Electrical & Electronics Engineers Inc
Fri Jul 20 10:40:05 2001

Grounding subsystems (*Continued*)
basic grounding and bonding concepts (*Continued*)
length restrictions on grounding/bonding conductors, 133
minimizing inductance on grounding/bonding conductor's path, 132–133
earth electrode subsystem, 134–136
fault/personnel protection subsystem, 136–138
lightning protection subsystem, 162–163
overview, 128–129
signal reference subsystem, 138–162
multipoint grounding. *See* Multipoint grounding
overview, 138–139
single-point grounding, 140–144
TREE configuration grounding, 144–146
site survey. *See* Site surveys and site power analyses, premises wiring and grounding system condition
telecommunications and distributed computing, 351–359. *See also* Telecommunications and distributed computing, powering and grounding
testing, 200–205
Ground loop, definition of, 8
Ground mapping, 150–152
Ground potential shift, definition of, 8
Ground window, definition of, 9

H

Hall-effect ammeters, 179
Harmonic component test (verification testing), 262
Harmonic current, 24
analyses, 280–282
equipment tolerances, 217
examples, 96–97, 100
filters, 229, 232
measurement of, 189, 221–222
transformer heating due to, 100–105
Harmonic distortion
definition of, 9
example of, 9
High frequency (HF), definition of, 78–83
High-frequency grounding, 204, 324–335
connection of equipment to signal reference grid, 333
flat strip signal reference grid, 330
overview, 324–329, 333–335
raised flooring understructure signal reference grid, 331–332
round-wire signal reference grid, 330–331
single-point and multipoint grounding, 332–333
solid covering of sheetmetal, 325
SRS for noncontiguous areas, 333

I

IBN (isolated bonding network)
definition of, 6
electronic equipment, 351–353
IEC (International Electrotechnical Commission), 367–369
IEEE (Institute of Electrical and Electronics Engineers), 369
IEEE Color Book Series, 3
Impedance, 61–78
ac system resonance, 73–78
parallel resonance, 74–77
resonance on feeders and branch circuits, 77–78
series resonance, 74–75
building ac distribution system impedance, 68, 70–71
dry-type transformers, 286
frequencies of interest, 61–62
performance range, 62
power/safety range, 61
load impedance, 72–73
power source dynamic impedance, 62–68
add-on filter components, 68–70
forward transfer impedance, 64–65
internal impedance, 63–64
interwinding electrostatic shielding, 66–68
output impedance, 65
wiring conductors at 415 Hz, 341–342

Copyright © 1999 IEEE. All rights reserved.

Copyright by the Institute Of Electrical & Electronics Engineers Inc
Fri Jul 20 10:40:05 2001

Impulse. *See* Transient
Induction motors
  low-voltage trip times, 29
Inductive coupling, 117–118
Information technology equipment (ITE), 47–54, 349
  grounding, 53–54
  powering, 47–53
Infrared detector, 181
ground circuit impedance testers, 177, 181–182
harmonic measurements, 189
infrared detector, 181
oscilloscope measurements, 177, 182–183
power line monitors, 177, 183–189
radio-frequency interference (RFI) and electromagnetic interference

Copyright by the Institute Of Electrical & Electronics Engineers Inc
Fri Jul 20 10:40:06 2001

Copyright by the Institute Of Electrical & Electronics Engineers Inc
Fri Jul 20 10:40:07 2001

M

Magnetic synthesizers, 229, 236–237
Maintenance, equipment, 263–265
  costs, 254
  preventative maintenance, 263
  restoring system operation after failure, 264–265
  wear and aging of components, 263–264
Materials specification and selection. *See* Equipment and materials specification and selection
Mean time between failures (MTBF), 250–251
Metal-clad cable, 303–304
Metal underground water pipe for grounding, 308
Microelectronic equipment, proliferation of, 24–25
Microprocessor-controlled equipment
  low-voltage trip times, 29
Momentary interruption (power quality monitoring), definition of, 10
Motor generators, 228, 230, 237–239
Motor starters and contactors
  low-voltage trip times, 29
MTBF (mean time between failures), 250–251
Multipoint grounding (MPG), 145–162
  attachment to earth electrode subsystem, 162
  equipotential plane, 152
  interconnection of multiple SRGP and SRGG levels, 161–162
  overview, 145, 147–148
  signal reference ground grids (SRGG), 156–159
  signal reference planes (SRP), 153–157
    SRGP at higher frequencies, 155–156
  signal reference subsystem (SRS) frequency requirements, 148–152
    ground mapping, 150–152
    SPG, TREE, and multipoint design bandwidths compared, 148–150
  spatial capacitor, 159–161

N

National Electrical Code (NEC), 1, 26, 56, 140–144, 197, 272, 355
National Electrical Manufacturers Association (NEMA) standards, 57
National Electrical Safety Code (NESC), 355
National Fire Protection Association (NFPA), 371
National Institute of Standards and Technology (NIST) standards, 57
National Power Laboratory (NPL) power quality survey, 37–39
Near-field coupling, 117, 120–121
NEC (National Electrical Code), 1, 26, 56, 140–144, 197, 272, 355
NEMA (National Electrical Manufacturers Association), 57
NESC (National Electrical Safety Code), 355
Neutral bus considerations, switchboards and panelboards, 292–293
Neutral conductor impedance, measuring, 202
Neutral conductor sizing, 201
NFPA (National Fire Protection Association), 371
NIST (National Institute of Standards and Technology), 57
Noise
  audible, 246
  common-mode (longitudinal)
    definition of, 6
  coupling into cabling, 358
  differential-mode. *See* Transverse-mode noise
  electrical
    definition of, 10
    example, 11
  equipment tolerances, 217
  example of, 11
  filters, 228–229, 232
  normal-mode. *See* Transverse-mode noise
  transverse-mode. *See* Transverse-mode noise

Copyright © 1999 IEEE. All rights reserved.

Copyright by the Institute Of Electrical & Electronics Engineers Inc
Fri Jul 20 10:40:08 2001

Nonarcing atmospheric charge redistribution, 114–115
Nonlinear load current
  definition of, 10
Nonlinear loads, 93–100
  definition of, 10
Nonsinusoidal voltage source, 106
Notch
  definition of, 11
  example of, 11
NPL (National Power Laboratory) power quality survey, 37–39

O

Occupational Safety and Health Administration (OSHA), 57, 200, 355
One-line diagram, 212
Operational specifications, 254–256
Operation cost considerations
  equipment and materials specification and selection, 253–254
Oscilloscope measurements, 182–183
OSHA (Occupational Safety and Health Administration), 57, 200, 355
Output impedance, 65
Output (reverse transfer) impedance (of a power source)
  definition of, 12
Output voltage
  distortion, 255
  regulation, 255
Overcurrent protective devices, switchboards and panelboards
Overload capability test (verification testing), 262
Overload capacity and duration, 255
Overvoltage, 86
  definition of, 12

P

PABX (private automatic branch exchange), 349
Panelboards. *See* Switchboards and panelboards
Parallel resonance, 74–77
Parallel systems, 248–249
Pathway, definition of, 12
Periodic function, definition of, 7
Personal computers (PCs)
  case histories, 383
  CBEMA curve, 47
  low-voltage trip times, 29
Personnel/fault grounding subsystem, 136–138
Phase imbalance, 86
  equipment tolerances, 217
Phase shift, 106
  definition of, 12
PLCs
  low-voltage trip times, 29
Power analyses. *See* Site surveys and site power analyses
Power correction devices, 228–244. *See also* Equipment and materials specification and selection, power correction devices
Power diode failure thresholds, 126
Power distribution unit (PDU), 239, 302
Power disturbance, definition of, 12
Power disturbance monitor, definition of, 12
Power electronic equipment, proliferation of, 24
Power-enhancement devices, 302–303
Power factor, 86, 99–100 106
  displacement, definition of, 12
  total, definition of, 12
Powering and grounding electronic equipment
  case histories. *See* Case histories
  definitions of terms, 5–20
    abbreviations and acronyms, 16–20
    terms used in recommended practice, 5–15
    words avoided, 15–16
  design and installation. *See* Design and installation practices, recommended
  equipment and materials specification and selection. *See* Equipment and materials specification and selection

Copyright © 1999 IEEE. All rights reserved.

Copyright by the Institute Of Electrical & Electronics Engineers Inc
Fri Jul 20 10:40:09 2001

fundamentals. *See* Fundamentals of powering and grounding electronic equipment
general needs. *See* General needs
instrumentation. *See* Instrumentation
overview, 1–4. *See also* General needs
scope of recommended practice, 1
site surveys and site power analyses. *See* Site surveys and site power analyses
telecommunications and distributed computing. *See* Telecommunications and distributed computing
Power line conditioners, 229, 236–239
Power line monitors, 183–189
event indicators, 184–185
steady-state power analyzers, 188–189
text monitors, 185–187
waveform analyzers, 187–188
Power line voltage disturbances, 83–84
Power monitoring, 212–216
long-term, 222–223
monitor connections, 212–216
monitor grounding, 215
monitor input power, 214
monitor placement, 215
quality of monitoring sense lead connections, 215–216
Power quality
definition of, 12
general needs. *See* General needs
standards, 25
Power technology considerations
equipment and materials specification and selection, 256–257
Prestrikes, 32
Preventive maintenance, 263
costs, 254
Primary loop system, 275
Primary selective system, 275
Private automatic branch exchange (PABX), 349
Protection of susceptible equipment, 45–47
noise protection, 46
overview, 45
rate of change in voltage disturbance, 45
sag protection, 47
surge protection, 46–47
Public telephone network (PTN), 348–349
Pull boxes, 302

R

Raceways, 299–302
conduit fittings, 301–302
conduit supports, 300–301
electrical metallic tubing, 300
flexible metal conduit, 300
rigid metal and intermediate metal conduit, 300
Radial ground, definition of, 8
Radial systems, 275
Radio-frequency interference (RFI), 86, 219–220
meters, 190
Receptacles, 298–299, 355
circuit testers, 181
isolated grounding, 322
miswiring, case study, 383–385
Recovery time, definition of, 12
Rectifiers, 256–257
failure thresholds, 126
Redundant systems, 248–250
Relative humidity measurement, 190
Reliability considerations
equipment and materials specification and selection, 248–252
cost and, 254
product reliability, 250–252
system configuration, 248–250
Remote arcing atmospheric charge redistribution, 114–115
Resonance, 73–78, 106
Restrikes, 32
RFI (radio-frequency interference), 86, 219–220
meters, 190
Ring bus, 275
RMS (root-mean-square) measurement, 191–193
RS-232 metallic connectors, 356

Copyright © 1999 IEEE. All rights reserved.

Copyright by the Institute Of Electrical & Electronics Engineers Inc
Fri Jul 20 10:40:09 2001

S

Safety, 271–273
Safety ground. *See* Equipment grounding conductor
Safety systems, 55–56
Sag
  case studies, 375–376
  definition of, 12
  example of, 13
  expectation of, 28–29
  prediction of sag-related upset and damage, 28–29
  protection, 47
  tolerances, 86, 217
Sampling rate, 191
Screened twisted pair (ScTP), 358–359
Secondary selective system, 275
Secondary spot network, 275
Selective systems, 275
Semiconductor failure thresholds, 126
Separately derived systems, 205–206
Series resonance, 74–75
Shield, definition of, 13
  overview, 138–139
  single-point grounding, 140–144
  TREE configuration grounding, 144–146
Signal reference ground plane (SRGP), 155–156, 161–162
Signal reference plane (SRP), 153–157
Signal reference structure, definition of, 13
Simple radial system, 275
Single-phase *versus* three-phase systems, 278
Single-point grounding, 140–144
  telecommunications and distributed computing, 353
Site surveys and site power analyses, 195–223
  ac voltage and current quality, 212–219
    ac current monitoring, 216
    monitor location and duration, 218
    power monitor connections, 212–216
    setting monitor thresholds, 216–218
    voltage disturbance analysis, 218–219
    voltage disturbance detection, 212
  applying data to select cost-effective solutions, 222

Copyright by the Institute Of Electrical & Electronics Engineers Inc
Fri Jul 20 10:40:10 2001

premises wiring and grounding system condition, 199–212
performance considerations, 205–206
safety considerations, 200–205
verification procedures, 206–212, 221
Site survey tools. *See* Instrumentation, site survey tools
Size and weight, system, 245
Skin effect (bonding), 130
Slew rate, 92–93
definition of, 13
Smoke/fire detector system case history, 391–392
SMPS (switched mode power supply) input voltage selector, 91
Solid-state circuit breaker (SSB), 265–266
Solid-state transfer switch (SSTS), 265–267
Spatial capacitor, 159–161
SPD. *See* Surge protective device
Spectrum analyzer, 177
SRGG (signal reference ground grid), 156–159, 161–162
SRGP (signal reference ground plane), 155–156, 161–162
SRP (signal reference plane), 153–157
SSB (solid-state circuit breaker), 265–266
SSTS (solid-state transfer switch), 265–267
Standards, codes, and agencies, coordination of, 56–58
Standby power systems, 228, 230, 239–241
design and installation practices, 283–284
Star-connected circuit
definition of, 13
Star ground. *See* Ground, radial
Start-up current, 180
Static condensor (STATCON), 265, 268–269
Steady-state power analyzers, 188–189
Steady-state voltage distortion. *See also* Load and power-source interactions
potential impact of, 100–107
sources and characteristics, 93–100
Step loads, 87
Stray ground currents, 43–44
Subcycle voltage waveform variances, 106–107
Surge protection design and installation practices. *See* Lightning and surge protection, design and installation practices
Surge protective device (SPD)
definition of, 14
switchboards and panelboards, 293
Surge reference equalizers, 337–339
definition of, 14
Surges, 107–128. *See also* Load and power source interactions; Transients
above-ground conductors, 123
buried cables, 122–123
EMI, potential impact of, 124–127
type I, signal-data disruption, 124–125
type II, gradual hardware stress and latent failures, 125–126
type III, immediate hardware destruction, 126–127
frequency and transmission path losses, 127–128
overview, 107
power line
data-processing equipment malfunction, 35–36
insulation breakdown or sparkover, 34, 36
power conversion equipment nuisance trips, 35–36
premature light bulb failure, 35
semiconductor device damage, 35–36
surge-protective device failure, 35–36
sources and characteristics, 107–117
lightning-induced surges, 111–114
localized ESD, 115–117
nonarcing and remote arcing atmospheric charge redistribution, 114–115
switching surges, 107–111
surge coupling mechanisms, 117–122
far-field (electromagnetic) coupling, 121–122
free-space coupling, 117–121
switching, 107–111
case studies, 376–379
Surge suppressors, 229, 233–234, 357
definition of, 14

Copyright © 1999 IEEE. All rights reserved.

Copyright by the Institute Of Electrical & Electronics Engineers Inc
Fri Jul 20 10:40:11 2001

Sustained interruption (electric power systems)
definition of, 10
Swell, 36, 86
definition of, 14
equipment tolerances, 217
examples of, 14
Switchboards and panelboards, 291–293
equipment grounding bus considerations, 293
location, 291
neutral bus considerations, 292–293
overcurrent protective device considerations, 291–292
surge protective device considerations, 293
Switched mode power supply (SMPS) voltage selector, 91
Synchronization test (verification testing), 261–262
System arrangement, 275–280
branch circuits, 279–280
dedicated circuits, 280
shared circuits, 280
coaxial cabling, 359
data-line surge suppressors, 357
integrity of intentional ground loops, 357
isolated ground receptacle (IGR), 355
noise coupling into cabling, 358
pathway separation between telecommunications and electrical cables, 357
powering for different network topologies, 356
screened twisted pair (ScTP) shield effectiveness and ground loop noise, 358–359
signal cabling, 357–359
signaling ports, 356–357
UTP cabling balance, 358
recommended power and grounding topologies, 351–354
CBN electronic equipment, 353–354
isolated bonding network (IBN) electronic equipment, 351–353
recommended practices, 349–350
surge protection, 337

Copyright by the Institute Of Electrical & Electronics Engineers Inc
Fri Jul 20 10:40:12 2001

component derating, 343
conductor ampacity, 342–343
controlling wiring losses, 341–342
grounding and shielding, 340–341
line-drop compensators, 342
recommended location, 340
Three-phase *versus* single-phase systems, 278
Thyristor failure thresholds, 126
TIA (Telecommunications Industry Association), 349, 371–372
Tools. *See* Instrumentation
Total harmonic distortion, 7
Transfer characteristics
equipment and materials specification and selection, 256
Transfer switch arrangements, 284–285
Transfer test (verification testing), 261
Transfer time (uninterruptible power supply), 256
definition of, 15
Transformers
add-on filter components, 68–70
conventional (no K-factor rating), 101–102, 289–291
current, 120
dry-type, 286–291. *See also* Equipment selection and installation, dry-type transformers
heating due to harmonic currents, 100–105
impedance, 62–65
interwinding electrostatic shielding, 66–68
K-factor rated, 103–105, 288–291
overheating, 221
sizing, 201
Transients, 86. *See also* Load and power-source interactions; Surges
definition of, 15
equipment tolerances, 217
potential impacts of, 90–93
sources and characteristics, 87–90
suppression, case study, 389
Transient voltage surge suppressor (TVSS), definition of, 15
Transistor failure thresholds, 126
Transverse-mode noise, definition of, 15
TREE configuration grounding, 144–146
Triplen currents, 105
Trip units (circuit breakers), 294
TTE (telephone terminal equipment), 349
TVs, low-voltage trip times, 29
TVSS (transient voltage surge suppressor), definition of, 15

U

Ufer ground. *See* Ground electrode, concrete encased
UL (Underwriters Laboratories), 56–57, 372–374
Unbalance, 27
Unbalanced load regulation, 255
definition of, 15
Undervoltage, 86
definition of, 15
Underwriters Laboratories (UL), 56–57, 372–374
Uninterruptible power supply (UPS), 228, 230, 241–244
case histories, 379–380
grounding, 309–318
isolated redundant systems, 249–250
parallel redundant systems, 248–249
rectifiers and inverters, 256–257
rotary, 241–243
static, 243–244
surge protection system, 336–337
transfer characteristics, 256
Unshielded twisted pair (UTP) cabling balance, 358
UPS. *See* Uninterruptible power supply
Utility companies, 198
power quality problems, case histories, 375–378
UTP (unshielded twisted pair) cabling balance, 358

V

VCRs
low-voltage trip times, 29

Copyright © 1999 IEEE. All rights reserved.

Copyright by the Institute Of Electrical & Electronics Engineers Inc
Fri Jul 20 10:40:13 2001

Vendor specifications, 258, 260
Verification testing. *See* Equipment and materials specification and selection, verification testing
Visual inspection (verification testing), 261
Visual media, use in site surveys, 212
Voltage distortion, 86
  definition of, 15
Voltage disturbances
  analysis, 218–219
  detection, 212
Voltage divider, 163–164
Voltage measurement instrumentation. *See* Instrumentation, voltage measurements
Voltage regulation, definition of, 15
Voltage regulators, 88–90, 228–229, 234–236
  buck-boost regulators, 235
  "ferroresonant" or constant voltage transformer (CVT), 235–236
  tap changers, 234–235
Voltage sag. *See* Sag
Voltage surges. *See* Surges
Voltmeters, 176–178

W

Waveform analyzers, 187–188
Waveform variations, 27
Wave-transmission line theory, 81–83
Weight and size, system, 245
Wiring
  condition. *See* Site surveys and site power analyses, premises wiring and grounding system condition
  cost of, 253
  devices, 298–299
    single-phase receptacles, 298
    three-phase receptacles, 298–299
  losses, controlling, 341–342
    380 to 480 Hz systems, 341–342
  problems, case studies, 382–388

Z

Zener failure thresholds, 126

Copyright © 1999 IEEE. All rights reserved.

Copyright by the Institute Of Electrical & Electronics Engineers Inc
Fri Jul 20 10:40:14 2001