DOCUMENTATION CONTROL CENTER

FAA-STD-049 -DCN 1
February 18, 1994

U.S. Department
of Transportation
**Federal Aviation
Administration**

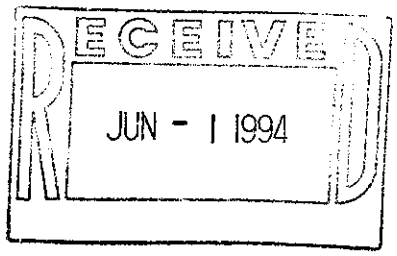

U.S. Department of Transportation

Federal Aviation Administration

Standard

FIBER OPTIC TELECOMMUNICATION SYSTEMS AND EQUIPMENT

LIBRARY USE ONLY

(THIS PAGE INTENTIONALLY LEFT BLANK)

DOCUMENT CHANGE NOTICE

1. Originator Name and Address	2.		3. Code Identification	4. Standard No.
SEIC Washington, DC	[ ]	Proposed	N/A	FAA-STD-049
	[X]	Approved	5. Code Identification N/A	6. DCN No. 1

7. System Designation	8. Related ECR/NCP No.	9. Contract No.	10. Contractual Activity
NAS	see #14	DTFA01-84-C-00017	N/A

11. Configuration Item Nomenclature	12. Effectivity
Fiber Optic Telecommunication Systems and Equipment, FAA-STD-049	N/A

This notice informs recipients that the standard identified by the number (and revision letter) shown in block 4 has been changed. The pages changed by this DCN (being those furnished herewithin) carry the same date as the DCN. The page numbers and dates listed below in the summary of changed pages, combined with nonlisted pages of the original issue of the revision shown in block 4, constitute the current version of this specification.

13. DCN No.	14. Pages changed	S*	A/D*	15. Date
1	NCP 16451 baselines this standard.		A	2/18/94

*S = Indicates Supercedes Earlier Pages *A = Indicates Added Page * D = Indicates Deleted Page

(THIS PAGE INTENTIONALLY LEFT BLANK)

FOREWORD

This standard establishes generic requirements for using fiber optic telecommunication systems and equipment in the National Airspace System (NAS) and references government and non-government standards, orders, guidance handbooks, and other pertinent documents.

This standard provides general reference information to assist NAS project personnel in acquiring fiber optic systems and equipment. This information includes types of fiber, cable construction and fiber optic network topologies and protocols. The standard also provides general instructions for selecting and tailoring this standard for use in FAA acquisitions, procurements and evaluations, as well as sources for government and non-government documents.

(THIS PAGE INTENTIONALLY LEFT BLANK)

TABLE OF CONTENTS

Paragraph	Title	Page
1.	SCOPE	1
1.1	Scope	1
1.2	Purpose	1
1.3	Applicability	1
2.	APPLICABLE DOCUMENTS	3
2.1	Government Documents	3
2.2	Non–Government Documents	4
3.	REQUIREMENTS	9
3.1	General Requirements	9
3.2	Application Guidelines	10
3.2.1	Airport Cable Loops	10
3.2.1.1	Runway Facilities	10
3.2.1.2	Airfield Facilities	11
3.2.2	Video Links	11
3.2.3	Local Area Networks/Wide Area Networks (LANs/WANs)	11
3.2.4	Point–to–Point Transmission	11
3.3	Selection of Requirements	11
3.3.1	Design	11
3.3.2	Test and Measurement	13
3.3.3	Site Survey, Installation and Integration	13
3.3.4	Maintenance	13
3.4	Appendices	13
3.5	Waivers	13
4.	QUALITY ASSURANCE PROVISIONS	15
5.	PREPARATION FOR DELIVERY	17
6.	NOTES	19
6.1	Acronyms and Abbreviations	19
6.2	Definitions	21

TABLE OF CONTENTS

Paragraph	Title	Page
	APPENDIX I	
10.	GENERAL REFERENCE INFORMATION	I-1
	APPENDIX II	
20.	TAILORING OF STANDARDS	II-1

LIST OF FIGURES

Figure 10.1-1	Represenative Fiber Optic Full Duplex Link	I-2
Figure 10.6-1	Nominal Cross-sections of Single-mode and Multimode Fiber	I-5
Figure 10.6-2	Types of Optical Fiber Transmission Showing Propagation of Light Along Fiber	I-6
Figure 10.8.1-1	Representative Fiber Optic Counter-rotating Dual Ring	I-8
Figure 10.8.2-1	Representative Fiber Optic Point-to-Point Topology Consisting of T1, T2, and T3 Nodes	I-9
Figure 10.9.1-1	FDDI Counter-rotating Dual Ring Structure	I-11

LIST OF TABLES

Table 10.9.1-1	Fiber Optic LAN and MAN Standards	I-12

1. SCOPE

1.1 Scope. This document contains general information on fiber optic communications systems and equipment, including types of fiber, cable construction, network topologies and communications standards and interfaces. This standard establishes the minimum requirements for fiber optic communications systems and equipment used in FAA applications supporting air traffic control, as well as administrative and management functions. This document also specifies government and non-government orders, standards, specifications and guidance handbooks for the following categories: (1) system design, (2) site survey, installation and integration, (3) test and measurement and (4) maintenance.

1.2 Purpose. This document provides (1) a stand-alone collection of orders, handbooks, standards and technical reports that NAS project personnel may use in developing procurement documents for fiber optic systems and equipment; (2) general reference information on fiber optic systems and equipment; and (3) potential FAA fiber optic applications.

1.3 Applicability. The requirements of this standard apply to all fiber optic systems and equipment designed, developed, procured, installed, operated or maintained by or on behalf of the FAA for air traffic control, administrative or management applications. These applications include airport cable loops, point-to-point fiber optic links, leased fiber optic lines, local area networks (LANs) and wide area networks (WANs). This standard also applies to NAS systems and equipment with communications functions or interfaces that use fiber optics or include embedded fiber optics.

(THIS PAGE INTENTIONALLY LEFT BLANK)

2. APPLICABLE DOCUMENTS

2.1 Government Documents. The following documents provide detailed information on a number of subjects discussed or referenced in this standard. In the event of conflict between the requirements of this standard and the requirements of the documents referenced herein, this standard shall have precedence. Some of these applicable documents are given in more than one section of the document.

STANDARDS

Federal

FED-STD-1037	Telecommunications: Glossary of Telecommunication Terms
FIPS PUB 146-1	Government Open Systems Interconnection Profile (GOSIP)

FAA

FAA-STD-019	Lightning Protection, Grounding, Bonding and Shielding Requirements for Facilities
FAA-STD-020	Transient Protection, Grounding, Bonding and Shielding Requirements for Electronic Equipment

OTHER PUBLICATIONS

Federal

DOT/FAA/CT-TN91/9	Glossary of Optical Communications Terms

FAA Orders

FAA Order 6000.15	General Maintenance Handbook for Airway Facilities
FAA Order 6032.1	Modifications to Ground Facilities, Systems, and Equipment in the National Airspace System
FAA Order 6650.7	Airport Communications Media/Equipment Selection Criteria
FAA Order 6650.8	Airport Fiber Optic Design Guidelines
FAA Order 6650.10	Maintenance of Fiber Optic Communications
FAA Order 6950.23	Cable Loop Systems at Airport Facilities
FAA Order 6950.26	Airport Selection Criteria for Power and Signal Distribution

FAA Specifications

FAA-E-2761	Cable, Fiber Optic, Multimode, Multifiber
FAA-E-2788	EIA-232 Transceiver, Fiber Optic
FAA-E-2789	Controller, Programmable, Monitor and Control
FAA-E-2790	Airport Surveillance Radar Transmission System, Video, Fiber Optic
FAA-E-2809	Manufacturing Specifications for Interface Modules and Boards, Fiber Optic Communications, Airport Facility
FAA-E-2810	T-Carrier with Drop and Insert, Fiber Optic
FAA-E-2820	Multiplexer-Demultiplexer (MULDEM), Optical Transceiver, Drop and Insert
FAA-G-2100	Electronic Equipment, General Requirements

2.2 Non-Government Documents. The following documents provide detailed information on subjects discussed or referenced in this standard. In the event of conflict between the requirements of this standard and the requirements of the documents referenced herein, this standard shall have precedence. Where appropriate,existing FAA specifications and orders pertaining to the use of fiber optic systems and equipment shall have precedence over non-FAA documents.

STANDARDS

NFPA 70	National Electric Code

American National Standards Institute (ANSI) and Electronic Industry Association (EIA)

ANSI X3T9.5	Fiber Distributed Data Interface Standard
ANSI T1.105	Telecommunications — Digital Hierarchy — Optical Interface Rates and Formats Specifications (SONET) (FDDI and STS Path Signal Level) (ECSA); Supplement T1.105A
ANSI T1.106	Telecommunications — Digital Hierarchy Optical Interface Specifications (Single Mode)
ANSI X3.139	Information Systems — Fiber Distributed Data Interface (FDDI) - Token Ring Medium Access Control (MAC)
ANSI X3.148	Information Systems — Fiber Distributed Data Interface (FDDI) — Token Ring Physical Layer Protocol (PHY)
ANSI X3.166	Information Systems — Fiber Distributed Data Interface (FDDI) — Token Ring Physical Layer Medium Dependent (PMD)

ANSI/UL 1277	Standards for Safety, Electrical Power and Control Tray Cables with Optimal Optical-Fiber Members
EIA-232D	Interface Between Data Terminal Equipment and Data Circuit-Terminating Equipment Employing Serial Binary Data Interchange
EIA-530	High Speed 25-position Interface for Data Terminal Equipment and Data Circuit-Terminating Equipment
EIA/CB9-F	Reference Guide for Fiber Optic Test Procedures, Connecting & Terminating Devices
ANSI/EIA/TSB-19	Optical Fiber Digital Transmission Systems
ANSI/EIA-440	Fiber Optic Terminology
ANSI/EIA/TIA-455-A	Standard Test Procedures for Fiber Optic Fibers, Cables, Transducers, Connecting and Terminating Devices and Other Fiber Optic Components
ANSI/EIA/TIA-455-2B	Impact Test Measurements for Fiber Optic Devices
ANSI/EIA/	Procedure to Measure Temperature TIA-455-3A Cycling Effects on Optical Fiber, Optical Cable, and Other Passive Fiber Optic Components
ANSI/EIA/TIA 455-12A	Fiber Optics - Fluid Immersion Test for Components
ANSI/EIA/TIA 455-16A	Salt Spray (Corrosion) Test for Fiber Optic Components
ANSI/EIA/TIA-458	Standard Optical Fiber Material Classes and Preferred Sizes
ANSI/EIA/TIA 4750000	Generic Specification for Fiber Optic Connectors
ANSI/EIA/	Optical Power Loss Measurements TIA-526-14 of Installed Multimode Fiber Cable Plant
ANSI/EIA/TIA-559	Single-Mode Fiber Optic System Transmission Design
ANSI/EIA/TIA-568	Commercial Building Telecommunications Wiring Standard
ANSI/EIA/TIA-590	Standard for Physical Location and Protection of Below-Ground Fiber Optic Cable Plant

Institute of Electrical and Electronics Engineers (IEEE)

IEEE 802.1I	Supplement to Media Access Control (MAC) Bridges Fiber Distributed Data Interface (FDDI)
IEEE 802.2	Logical Link Control for FDDI

IEEE 802.3	Carrier Sense Multiple Access/Collision Detection (CSMA/CD) Access Method and Physical Layer Specifications
IEEE 802.4	Token-Passing Bus Access Method and Physical Layer Specifications
IEEE 802.5	Token Ring Access Method and Physical Layer Specifications
IEEE 802.6	Distributed Queue Dual Bus (DQDB) Metropolitan Area Network (MAN)
IEEE STD 812	Glossary of Terms, Fiber Optics

International Telegraph and Telephone Consultative Committee (CCITT)

Recommendation (RECMN) G.651	Characteristics of a 50/125 Micrometer Multimode Graded Index Optical Fiber Cable -- Transmission Media
RECMN G.652	Characteristics of a Single-Mode Optical Fiber Cable -- Transmission Media Characteristics (Study Group XV)
RECMN G.653	Characteristics of a Dispersion-Shifted Single-Mode Optical Fiber Cable -- Transmission Media Characteristics (Study Group XV)
RECMN G.654	Characteristics of a 1550 nm Wavelength Loss-minimized Single-Mode Optical Fiber Cable -- Transmission Media Characteristics (Study Group XV)
RECMN G.707	Synchronous Digital Hierarchy Bit Rates
RECMN G.708	Network Node for Digital Synchronous Hierarchy
RECMN G.709	Synchronous Multiplexing Structure
RECMN G.958	Digital Line Systems Based on the Synchronous Digital Hierarchy for Use on Optical Fiber Cables -- Digital Networks, Digital Sections and Digital Line Systems (SG XV)
RECMN K.25	Lightning Protection of Optical Fiber Cables -- Protection Against Interference (SG V)
RECMN L.10	Optical Fiber Cables for Duct, Tunnel, Aerial and Buried Application -- Construction, Installation and Protection of Cable and Other Elements of Outside Plant (SG VI)

RECMN L.12	Optical Fiber Joints -- Construction, Installation and Protection of Cable and Other Elements of Outside Plant (SG VI)
RECMN L.13	Sheath Joints and Organizers of Optical Fiber Cables in the Outside Plant -- Construction, Installation and Protection of Cable and Other Elements of Outside Plant (SG VI)
RECMN V.35	Data Transmission at 48 Kilobits Per Second Using 60-108 kHz Group Band Circuits
CCITT X.21 bis	Use on Public Data Networks of Data Terminal Equipment (DTE) Which is Designed for Interfacing to Synchronous V-Series Modems

International Standards Organization (ISO)

ISO/IEC 8802-2	Information Processing Systems - Local Area Networks - Part 2: Logical Control
ISO/IEC 8802-3	Information Processing Systems - Local Area Networks - Part 3: Carrier Sense Multiple Access with Collision Detection (CSMA/CD) Access Method and Physical Layer Specifications
ISO/IEC 8802-4	Information Processing Systems - Local Area Networks - Part 4: Token-Passing Bus Access Method and Physical Layer Specification
ISO/IEC 8802-5	Information Processing Systems - Local Area Networks - Part 5: Token Ring Access Method and Physical Layer Specification
ISO 9314-1	Information Processing Systems - Fibre Distributed Data Interface (FDDI) - Part 1: Token Ring Physical Layer Protocol (PHY)
ISO/IEC 9314-2	Information Processing Systems - Fibre Distributed Data Interface (FDDI) - Part 1: Token Ring Medium Access Control (MAC)
ISO/IEC 9314-3	Information Processing Systems - Fibre Distributed Data Interface (FDDI) - Part 1: Physical Layer Medium Dependent (PMD)
ISO/IEC 9314-5	Information Processing Systems - Fibre Distributed Data Interface (FDDI) - Part 1: Hybrid Ring Control (HRC)

Bellcore

TP 76640	Dark Fiber Transport Facilities, Issue 1
TR-TSY-000020	Generic Requirements for Optical Fiber and Optical Fiber Cable, Issue 4
TR-NWT-000253	Synchronous Optical Network (SONET) Transport Systems, Common Generic Criteria, Issue 2
TR-NWT-000326	Generic Requirements for Optical Fiber Connectors and Connectorized Jumper Cables, Issue 2
TR-NWT-000409	Generic Requirements for Intrabuilding Optical Fiber Cable, Issue 2
TR-TSY-000496	SONET Add-Drop Multiplex Equipment (SONET ADM) Generic Criteria, Issue 2, Supplement 1
TR-TSY-000765	Splicing Systems for Single-Mode Optical Fibers, Issue 1
TR-NWT-000909	Generic Requirements and Objectives for Fiber in the Loop Systems, Issue 1
TR-NWT-000917	SONET Regenerator (SONET RGTR) Equipment Generic Criteria (A Module of TSGR, FR-NWT-000440), Issue 1
TR-TSY-000944	Generic Requirements for Optical Distribution Cable, Issue 1

Nippon Electronics Corporation (NEC)

NEC Article 770	Ratings for Optical Fiber Cable

Document Sources:

(1) ANSI and ISO documents may be obtained from the American National Standards Institute, 1430 Broadway,New York,NY 10018. Tel. (212) 642-4900.

(2) EIA documents may be obtained from the Electronic Industries Association,2001 I Street,NW,Washington,DC 20006.

(3) Bellcore Documents AT&T internal standards may be ordered directly from Bellcore via a catalog or by contacting one of the Bellcore libraries located throughout the US. The Bellcore Customer Service Hotline Toll Free telephone number is: 1 (800) 521-CORE (2673).

(4) NIST, Gaithersburg, MD, telephone (301) 975-2000.

(5) American Society for Testing and Materials (ASTM) Specifications may be obtained from ASTM, 1916 Race St., Philadelphia, PA 19103.

3. REQUIREMENTS

3.1 General Requirements. Fiber optic systems and equipment shall be non-developmental items (NDI) and commercial off-the-shelf (COTS) equipment to the greatest extent possible.

Prior to acquiring fiber optic systems or equipment for an FAA project or application, an alternatives trade-off study should be performed to determine if fiber optics is the best cost-effective and practical solution. The requirements stated in this section pertain to applications where optical fiber has been determined to be the preferred transmission medium.

The following general requirements shall be imposed on fiber optic systems and equipment implemented in the FAA:

a. Single-mode fiber shall be used in applications where very high data rate requirements (approximately 150 Mbps or higher) exist and long distances (more than approximately 2 kilometers) are involved and only after it has been justified by a requirements analysis.

b. Multimode fiber shall be used in applications where data rate requirements of less than approximately 150 Mbps exist and shorter distances (less than approximately 2 kilometers) are involved. 62.5/125 micrometer is the preferred size of multimode fiber.

c. Plastic optical fiber shall be used only in applications where extremely short distances are involved (less than approximately 200 meters).

d. Local area networks (LANs), metropolitan area networks (MANs) and wide area networks (WANs) that employ fiber optic systems and equipment shall meet the requirements of FDDI standards (refer primarily to ANSI X3T9.5). Nodes of fiber optic rings shall be attached using a FOCSM (refer to FAA-E-2820, Multiplexer-Demultiplexer (MULDEM) Optical Transceiver, Drop and Insert). Requirements for FOCSM modules are contained in EIA-232D.

e. Fiber optic video applications shall adhere to the requirements specified in FAA-E-2790.

Potential equipment and implementation activities required for fiber optic applications at airport areas include:

a. Fiber optic cable installation and maintenance;

b. Fiber optic communications system multiplexer (FOCSM);

c. Programmable logic controllers (PLCs) and associated components;

d. Synchronous optical network (SONET) equipment;

e. D4 channel bank and associated transmission equipment;

f. Fiber optic video transmission systems;

g. Fiber optic communications system multiplexer;

h. Analog-to-digital converters;

i. Laser transmitters;

j. Two-wire to four-wire converter;

k. Transfer switch and annex;

l. Telecommunications foreign exchange office/foreign exchange subscriber (FXO/FXS) components;

m. Uninterruptible power supply;

n. A/B switch;

o. Systems integration.

3.2 Application Guidelines. This section contains guidelines for using fiber optic technology in FAA applications, including airport cable loops, video links, and local and wide area networks (including new building construction).

3.2.1 Airport Cable Loops.

3.2.1.1 Runway Facilities. Either point-to-point or ring networks, or a combination thereof, may be used to connect the following runway facilities with each other or with other airport facilities. Note that runway facilities transmit or exchange data, whereas airfield facilities transmit or exchange voice or data.

a. Middle Marker (MM)

b. Far Field Monitor (FFM)

c. Medium-Intensity Approach Lighting System with Runway Alignment Indicator Light and Approach Lighting System with Flashers-II (MALSR and ALSF-II)

d. Inner Marker (IM), Localizer (LOC)

e. Microwave Landing System (MLS)

f. Glide Slope (GS)

g. Runway Visibility Range (RVR)

h. Precision Approach Path Indicator (PAPI)

i. Runway Visibility Range Midfield (RVR-MF)

j. Remote Transmitter/Receiver (RTR)

3.2.1.2 Airfield Facilities. The following airfield facilities at FAA airports are candidates for fiber optic connectivity:

a. Remote Transmitters/Receivers (RTR) (voice)

b. Airport Surveillance Radar (ASR) (data and video)

c. Airport Surface Detection Equipment (ASDE) (data)

d. Air Traffic Control Tower (ATCT) (voice)

e. Terminal Radar Approach Control (TRACON) (voice)

f. Doppler VHF Omnidirectional Range (DODR) (data)

3.2.2 Video Links. The Chicago TRACON and other FAA terminal areas have requirements to distribute Airport Surveillance Radar wide-band analog video to Digital Bright Radar Indicator Tower Equipment (DBRITE) located in FAA towers. Fiber optic cable has been identified as a candidate method of transmission for new DBRITE video links and for the eventual replacement of existing TMLs. DBRITE video distribution architectures include star and point-to-point configurations; these networks handle wide-bandwidth (15.5 MHz), uncompressed, analog video.

3.2.3 Local Area Networks/Wide Area Networks (LANs/WANs). New building installations include, but are not limited to, Metroplex Control Facilities (MCFs) and airport buildings (e.g., ATCTs).

Fiber optic systems and equipment shall be used to provide intrafacility communications in new FAA buildings where space for cabling is limited or where fiber optic transmission is cost effective and practical.

3.2.4 Point-to-Point Transmission. Runway and airfield facilities shown as candidates for airport cable loops in Section 3.2.1 are also candidates for point-to-point fiber optic transmission, based on their functional and network characteristics.

3.3 Selection of Requirements. The following paragraphs provide the applicable set of fiber optics documents for each major phase of fiber optic system development. The minimum requirements for implementing fiber optic systems and equipment shall be selected from these documents.

3.3.1 Design. The design of fiber optic systems depends on many factors, including system power budget, cable type, number and type of connectors and distance between nodes.

Fiber optic cable shall comply with the requirements of FAA-E-2761 unless specifically justified by a requirements analysis.

At a minimum, the following documents shall be used to select requirements for specifying fiber optic system design:

FAA Order 6650.7	Airport Communications Media/Equipment Selection Criteria
FAA Order 6650.8	Airport Fiber Optic Design Guidelines
FAA Order 6950.23	Cable Loop Systems at Airport Facilities
FAA Order 6950.26	Airport Selection Criteria for Power and Signal Distribution
FAA-E-2761	Cable, Fiber Optic, Multimode, Multifiber
FAA-E-2790	Airport Surveillance Radar Transmission System, Video, Fiber Optic
FAA-E-2809	Manufacturing Specifications for Interface Modules and Boards, Fiber Optic Communications, Airport Facility
FAA-E-2820	Multiplexer/Demultiplexer (MULDEM), Optical Transceiver, Drop and Insert
RECMN K.25	Lightning Protection of Optical Fiber Cables -- Protection Against Interference
RECMN L.10	Optical Fiber Cables for Duct, Tunnel, Aerial and Buried Application -- Construction, Installation and Protection of Cable and Other Elements of Outside Plant (SG VI)
RECMN L.12	Optical Fiber Joints -- Construction, Installation and Protection of Cable and Other Elements of Outside Plant (SG VI)
RECMN L.13	Sheath Joints and Organizers of Optical Fiber Cables in the Outside Plant -- Construction, Installation and Protection of Cable and Other Elements of Outside Plant (SG VI)
ANSI/EIA/TSB-19	Optical Fiber Digital Transmission Systems
ANSI/EIA/TIA-568	Commercial Building Telecommunications Wiring Standard
ANSI/EIA/TIA-590	Standard for Physical Location and Protection of Below-Ground Fiber Optic Cable Plant
TR-NWT-000909	Generic Requirements and Objectives for Fiber in the Loop Systems, Issue 1
Bellcore TP 76640	Dark Fiber Transport Facilities, Issue 1

Bellcore TR-TSY-000409	Generic Requirements for Intrabuilding Optical Fiber Cable, Issue 2
ANSI/UL 1277	Standards for Safety, Electrical Power and Control Tray Cables with Optimal Optical-Fiber Members

3.3.2 Test and Measurement. At a minimum, the following documents shall be used to select requirements for specifying test and measurement of fiber optic systems and equipment.

ANSI/EIA-455-A	Standard Test Procedures for Fiber Optic Fibers, Cables, Transducers, Sensors, Connecting and Terminating Devices, and Other Fiber Optic Components
ANSI/EIA/TIA-455-2B	Impact Test Measurements for Fiber Optic Devices
ANSI/EIA/TIA-455-3A	Procedure to Measure Temperature Cycling Effects on Optical Fiber, Optical Cable, and Other Passive Fiber Optic Components
ANSI/EIA/TIA-526-14	Optical Power Loss Measurements of Installed Multimode Fiber Cable Plant
EIA/CB9-F	Reference Guide for Fiber Optic Test Procedures, Connecting & Terminating Devices

3.3.3 Site Survey, Installation and Integration. At a minimum, the following documents shall be used to select requirements for specifying site survey, installation and integration activities for fiber optic systems and equipment.

FAA-STD-019b	Lightning Protection, Grounding, Bonding and Shielding Requirements for Facilities
FAA-STD-020b	Transient Protection, Grounding, Bonding and Shielding Requirements for Electronic Equipment

3.3.4 Maintenance. At a minimum, the following documents shall be used to select requirements for specifying the maintenance of fiber optic systems and equipment:

FAA Order 6000.15	General Maintenance Handbook for Airway Facilities
FAA Order 6032.1	Modifications to Ground Facilities, Systems, and Equipment in the National Airspace System
FAA Order 6650.10	Maintenance of Fiber Optic Communications
Bellcore TR-TSY-000765	Splicing Systems for Single-mode Optical Fibers

3.4 Appendices. Appendix I contains general fiber optic reference information. Appendix II provides general instructions for selecting and tailoring this standard for use in FAA acquisitions, procurements and evaluations.

3.5 Waivers. This section is not applicable to this document.

(THIS PAGE INTENTIONALLY LEFT BLANK)

4. QUALITY ASSURANCE PROVISIONS

This section is not applicable to this document.

(THIS PAGE INTENTIONALLY LEFT BLANK)

5. PREPARATION FOR DELIVERY

This section is not applicable to this document.

(THIS PAGE INTENTIONALLY LEFT BLANK)

6. NOTES

6.1 Acronyms and Abbreviations. The following is a list of acronyms and abbreviations applicable to this document.

ALS	Approach Lighting System
ANSI	American National Standards Institute
ANTC	Advanced Network Test Center
ASDE	Airport Surface Detection Equipment
ASR	Airport Surveillance Radar
ATCT	Air Traffic Control Tower
Bellcore	Bell Communications Research
CCITT	International Telegraph and Telephone Consultative Committee
COTS	Commercial Off-the-Shelf
CRC	Cyclic Redundancy Check
CSMA/CD	Carrier Sense Multiple Access/Collision Detection
DBRITE	Digital Bright Radar Indicator Tower Equipment
DQDB	Distributed Queue Dual Bus
EIA	Electronic Industries Association
FAA	Federal Aviation Administration
FDDI	Fiber Distributed Data Interface
FDMA	Frequency Division Multiple Access
FOCSM	Fiber Optic Communications System Multiplexer
FOMAU	Fiber Optic Medium Attachment Unit (ANSI/IEEE 802.3)
GS	Glide Slope
GOSIP	Government Open Systems Interconnection Profile
IEEE	Institute of Electronic and Electrical Engineers
I/O	Input/Output
IOC	Integrated Optical Circuit
IOL	Interoperability Lab
ILD	Injection Laser Diode
ISDN	Integrated Services Digital Network
ISO	International Standards Organization
LAN	Local Area Network
LED	Light-Emitting Diode
LLC	Logical Link Control
MAC	Medium Access Control
MALSR	Medium Intensity Approach Lighting System with Runway Alignment Indicator Lights
MAN	Metropolitan Area Network
MLS	Microwave Landing System
NAS	National Airspace System
NBS	*See* NIST
NDI	Non-developmental Item
NEC	National Electric Code

NIST	National Institute of Standards and Technology (formerly National Bureau of Standards, NBS)
OSI	Open System Interconnection
PAPI	Precision Approach Path Indicator
PHY	Physical Layer Protocol
PLC	Programmable Logic Controller
PMD	Physical Layer Medium Dependent
POF	Plastic Optical Fiber
RAIL	Runway Alignment Indicator Lights
RECMN	Recommendation
ROM	Read-only Memory
RT	Radio Transfer
RVR	Runway Visual Range
RX	Receiver
SMAP	System Management Application Process
SMT	Station Management
SONET	Synchronous Optical Network
TIA	Telecommunications Industry Association
TML	Television Microwave Link
TRACON	Terminal Approach Control Tower
TX	Transmitter
XCVR	Transceiver

6.2 Definitions. Complete fiber optic technology glossaries and technology tutorials are provided in many sources, including DOT/FAA/CT-TN91/9 (Glossary of Optical Communications Terms), FAA Order 6000.15 (General Maintenance Handbook for Airway Facilities), IEEE STD 812 (Glossary of Terms, Fiber Optics), FAA Order 6650.8 (Airport Fiber Optic Design Guidelines), FED-STD-1037B (Telecommunications: Glossary of Telecommunication Terms) and EIA-440 (Fiber Optic Terminology). Definitions of the more common fiber optic terms are provided below.

absorption – The process by which impurities in the fiber material absorb optical energy and dissipate it as a very small quantity of heat.

aramid – A tough, synthetic yarn used as protective braid for optical cable.

asynchronous transfer mode (ATM) – A method of data transfer in which all types of information (data, voice and video) are passed in high speed cells of fixed size over a virtual circuit that is established on demand.

attenuation – The loss of optical power as light travels through the optical fiber, measured in decibels (dB). *Note:* Sometimes "attenuation" is used as a synonym for "attenuation coefficient," expressed in dB/km.

attenuation coefficient – For an optical fiber, the diminution of signal strength as the signal traverses the fiber, normalized to a standard length. Attenuation coefficient is expressed in dB/km.

bandwidth – For an optical fiber, the capacity to carry information. *Note 1:* Multimode fibers are specified for the modal distortion-limited bandwidth only; their useful bandwidth is actually less because of dispersion effects. This phenomenon is especially important in the first (850 nanometers) window, where material dispersion is approximately 0.1 nanosecond per nanometer of line width of the optical source, per kilometer of fiber length. *Note 2:* The bandwidth of an optical fiber refers to the 3-dB (half-power) point of the optical signal. "Bandwidth" is sometimes used as a synonym for "bandwidth x length product."

bandwidth x length product – For an optical fiber, the bandwidth, usually expressed in megahertz (MHz) or gigahertz (GHz), normalized to a standard length, usually one kilometer (km). *Synonym* "bandwidth x distance product."

buffer (tube) – 1. A conduit-like component (buffer tube) having a small cross-section, usually made of polycarbonate plastic, incorporated in many optical cable designs. The buffer may contain one or many fibers. 2. An additional polymer coating (tight buffer) that is in intimate contact with the fiber's polymer coating, similar to electrical wire insulation. *Note 1:* The tight buffer is not the same as the primary polymer coating, which is applied to all fibers during manufacture.

bus topology – A network configuration in which all nodes are connected serially. Information flows in either direction along the bus.

cladding – The layer of material of an optical fiber in intimate contact with the core. The cladding has a lower refractive index than that of the core material.

coating – A layer of polymer used to protect the fiber from abrasion, cushion it and enhance its electrical properties; the thickness of the coating depends on the fiber application. When the buffer tube contains multiple fibers, the outermost layer of the coating may be color coded.

commercial off-the-shelf (product) – An item or equipment that can be purchased through a commercial retail or wholesale distributer at prices that are based on established catalog or market prices.

connector – A demountable device used to attach an optical fiber to another fiber or to an active device such as a transmitter.

core – The central region of an optical fiber, usually made of silica glass, through which light is transmitted. The refractive index of the core must be higher than that of the cladding.

coupling loss – The power loss, in decibels, that occurs when light is transferred from one optical component to another.

dispersion – The phenomenon that occurs in optical fiber in which the velocity of the electromagnetic wave in the physical medium is wavelength dependent. Differences in propagation velocity can be caused by interactions between the lightwave and the fiber material, the difference in physical properties of the core and cladding materials, or the geometry of the optical fiber (e.g., ratio of core diameter to cladding diameter).

drop-and-insert – A multiplexer that has the capability to receive (drop) and transmit (insert) data from/to one or more communications channels without interfering with the operation of other channels.

dual-window – Optical fiber operating at two windows (wavelengths). *Note:* 850 nm and 1300 nm are the windows used in multimode fibers.

Fiber Distributed Data Interface (FDDI) – An optical fiber token ring network defined by ANSI standards.

fiber amplifier – A relatively simple device that amplifies an optical signal directly without having to convert it to an electrical signal, amplify it electrically, then reconvert it to an optical signal. A fiber amplifier may be used with either analog or digital signals.

fiber optic medium attachment unit (FOMAU) – A device specified by ISO/IEC 8802-3 (ANSI/IEEE 802.3) for the conversion of digital signals to optical signals and vice versa.

Fresnel reflection – The reflection of a portion of incident light at a planar interface between two homogeneous media having different refractive indices. *Note 1:* The Fresnel reflection occurs at the air-glass interfaces at the entrance and exit ends of optical fiber. *Note 2:* Transmission losses of about 4% per interface can be eliminated by the use of antireflective coatings or index-matching materials.

gel-filled tube – A loose buffer tube that is filled with a non-toxic, non-irritating compound, similar in consistency to petroleum jelly, that prevents the intrusion of water or water vapor.

graded-index fiber – Optical fiber, the core of which is composed of a series of concentric rings of silica having successively lower refractive indices, reducing dispersion. *Note 1*: The function of refractive index vs. distance from the core axis is parabolic. *Note 2*: Graded-index fiber is often appropriate where relatively long distances and/or high bandwidth are required.

laser diode – A solid state device capable of producing coherent light with relatively low beam convergence and which may be used as the source in optical communication systems. *Note 1:* A laser diode couples far more light into an optical fiber than a conventional LED and is capable of being modulated at frequencies in the gigahertz (GHz) range. *Synonym* injection laser diode (ILD).

light-emitting diode (LED) – A solid state device capable of producing incoherent light suitable for application as the source in certain optical communication systems. *Note 1:* The radiation pattern of a conventional LED is Lambertian (spherical) and is not coupled into a fiber as efficiently as that for a laser diode. *Note 2:* The upper bound of the frequency range at which commercially available LEDs may be modulated is approximately 200 megahertz (MHz).

Maxwell's equations – A set of four partial differential equations developed by James Clerk Maxwell that expands upon and unifies the laws of Ampere, Faraday and Gauss and forms the foundation of modern electromagnetic theory. These equations describe the behavior of electromagnetic waves in free space, in dielectrics and at the conductor–dielectric boundaries.

micrometer – The unit of length equal to one millionth of a meter.

modal distortion – A phenomenon inherent in multimode fibers in which a monochromatic signal that is propagating in multiple modes is distorted. *Note 1:* Because the effective velocity of propagation is mode dependent, the shape of a complex signal will undergo continuous change. This modal distortion causes the information-carrying capacity (bandwidth) of the fiber to be decreased. *Note 2:* The degree of modal distortion (and bandwidth reduction) is proportional to the length of the fiber. *Synonyms* multimode distortion, intermodal distortion.

mode – For an optical fiber, a single configuration of the electric and magnetic fields within the fiber, corresponding to a single solution of Maxwell's equations that relate the materials, dimensions and boundary conditions of the fiber.

multimode fiber – Optical fiber having a relatively large core cross-section capable of transmitting light having more than one mode of propagation (i.e., more than one solution to Maxwell's equations. *Note 1:* Multimode fiber may be either step-index or graded index fiber. *Note 2:* Multimode fiber may use a conventional LED source, but requires regeneration at shorter intervals than single-mode fiber.

nanometer – Unit of length equal to one billionth of a meter.

non-developmental item (NDI) – A product or device that may be produced without further development or refinement of the product or the production process. *Note 1:* NDI may or may not be a commercial off-the-shelf (COTS) item.

optical fiber – Any filament of dielectric material that guides light.

optical repeater – An optoelectronic device or module that receives an optical signal, converts it to an electrical signal, amplifies the electrical signal (and if the signal is digital may reshape it and/or re-time it) and converts it back to an optical signal for retransmission.

optoelectronic – Pertaining to any device that functions as an electrical-to-optical or optical-to-electrical transducer, or any instrument that employs such a device in its operation. Photodiodes, LEDs, injection laser diodes, and integrated optical circuit (IOC) elements are examples of opto-electronic devices commonly used in optical fiber communications.

point-to-point configuration – A transmission configuration in which one transmitter/transceiver is connected to another receiver/transceiver via optical fiber. The link may be simplex or duplex.

reflection – The abrupt change in direction of a wavefront at an interface between two dissimilar media, causing the wavefront to return into the medium from which it originated.

refraction – The change of direction of a beam of light passing through the boundary (interface) between two media having different indices of refraction, or through a medium having an index of refraction that is a continuous function of position, e.g., the core of a multimode graded-index fiber.

ring or loop topology – A closed path transmission system in which all nodes are connected serially. Redundancy is provided in the ring configuration by the capability for data to travel in either direction along the ring.

scattering – A change in the direction, and/or polarization, of an electromagnetic wave, caused by the interaction of the wave with particulate matter or incongruities in the refractive index of the material.

single-mode fiber – Optical fiber having a relatively small core cross-section that allows the transmission of light having only one mode of propagation (i.e., only one solution to Maxwell's equations). *Note 1:* Single-mode fiber typically requires regeneration every 30 miles. *Note 2:* Single-mode fiber cannot be used with conventional LED optical sources; sources with minimum beam divergence must be used.

token ring network – A closed loop serial interconnection, comprising three or more communicating entities, in which supervisory control is accomplished by circulating a distinctive pattern (group) of bits, called a "token." *Note:* When there is no traffic on the network, the token is passed sequentially to each member of the network. When a member desires control of the network, it seizes the token, removing it from circulation, and transmits data. When the transmission is complete, the token is returned to circulation.

transceiver – In optical fiber communication, any device that incorporates the transmit and receive functions in a single chassis or enclosure. *Note 1:* Normally, a transceiver has separate receive and transmit ports and employs two fibers in the optical transmission path. A transceiver may use a single fiber for bidirectional transmission.

window – In optical fiber communications, a region of the frequency spectrum in which the fiber is sufficiently transparent to be used for the transmission of light. *Note 1:* The windows in silica-based fibers are in the regions around 850 nanometers, 1310 nanometers and 1550 nanometers.

APPENDIX I

10. GENERAL REFERENCE INFORMATION

This appendix provides a general description of basic types of fiber, fiber optic network topologies and interface standards.

10.1 Types of Fiber. The two basic types of optical fiber, single-mode and multimode, are described in the following paragraphs. Figure 10.1-1 illustrates a duplex optical transmission link in which optical fiber is used as the transmission medium between two optical transceivers. ANSI/EIA/TIA-458 contains standard optical material classes and preferred sizes. Bellcore technical report TR-TSY-000020 contains generic requirements for optical fiber and optical fiber cable.

10.2 Single-mode Fiber. Single-mode optical fiber allows only the lowest order bound mode (i.e., electromagnetic field configuration) to propagate through the fiber at the wavelength of interest. Single-mode operation eliminates the bandwidth reduction caused by modal distortion. Single-mode fiber is best suited to high data rate requirements, such as wide-bandwidth video.

The primary characteristics of single-mode fiber are:

a. Supports high data transfer rates;

b. Typically, requires regeneration every 30 miles;

c. Cannot use conventional LED optical source. Requires a transmitter having a source with minimal beam divergence, such as a laser diode.

ANSI/EIA/TIA-559 defines the requirements for single-mode fiber optic systems. Characteristics of various types of single-mode fiber cable are provided in CCITT Recommendations G.652, G.653 and G.654.

10.3 Multimode Fiber. While single-mode fibers have only one solution to Maxwell's equations for the wavelength of interest, multimode fibers may have as many as a hundred or more. Multimode fiber receives and emits a broader cone of light rays (i.e., they have a higher numerical aperture) than single-mode fiber. Multimode fiber may be either step-index or graded-index, the latter of primary interest for FAA applications. Graded-index multimode fiber has the following characteristics:

a. Captures approximately 18-20 dB more light from a conventional LED source than single-mode fiber. Even when used with an LED transmitter, multimode fiber can tolerate a limited amount of passive splitting for small network applications.

b. Using a conventional LED source, requires regeneration at intervals of approximately 2-6 miles (3-10 kilometers), depending on the operating wavelength. Regeneration intervals may be longer if a laser diode optical source is used.

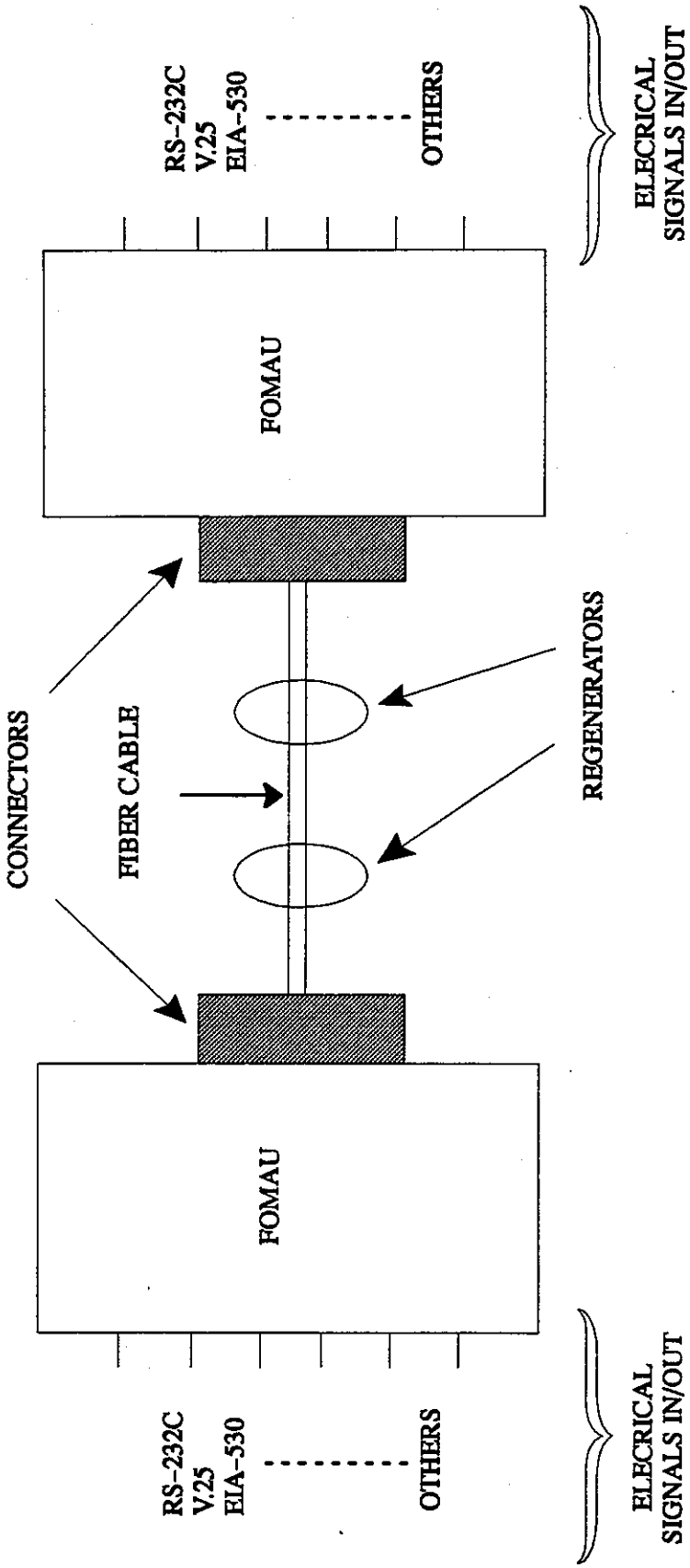

FOMAU - Fiber Optic Medium Attachment Unit,
Performs Optical-to-Electrical Conversion
and Vice Versa

Figure 10.1-1 Representative Fiber Optic Full Duplex Link

c. Possesses a lower bandwidth x length product than single-mode fiber (typically less than 1 GHz x kilometer; in most cases the product is lower, although fibers possessing products as high as 3 GHz x km have been produced). In practice, physical limitations of LED transmitters, with which multimode fiber is usually used, restrict transmission bandwidth to approximately 200 MHz. Short graded-index multimode fiber is capable of supporting much higher data rates when used with laser transmitters.

d. Generally, exhibits lower bending losses than single-mode fiber (an important characteristic in cases when cables are dressed to short bending radii (e.g., in LAN applications).

Type A -- Non-armored totally dielectric cable having a dielectric strength member for duct installation in areas subject to frequent electrical storms.

Type B -- Cable having a dielectric strength member and corrugated bimetal (copper over steel) armor, for direct earth burial installations where rodent protection is required.

Type C -- Two-fiber (duplex) loose tube cable for interior applications; this cable is sheathed with a non-halogenated, low smoke producing material.

Type D -- Same as Type A, but with an intermediate polyvinylidene fluoride sheath to provide protection from hydrocarbon fuels.

Type E -- Same as Type B, but with an intermediate polyvinylidene fluoride sheath to provide protection from hydrocarbon fuels.

Type F -- Two-fiber (duplex) tight buffer, cable for interior use having a helically wrapped or braided aramid reinforcement and sheathed with a non-halogenated, low smoke producing material.

Type G -- Twelve-fiber, non-armored totally dielectric cable having a dielectric strength member for duct installation in areas subject to frequent electrical storms.

Type H -- Twelve-fiber cable having a dielectric strength member and corrugated bimetal (copper over steel) armor, for direct earth burial installations where rodent protection is required.

Type I -- Same as G, but with an intermediate polyvinylidene fluoride sheath to provide protection from hydrocarbon fuels.

Type J -- Same as Type H, but with an intermediate polyvinylidene fluoride sheath to provide protection from hydrocarbon fuels.

Type K -- Twenty-four-fiber, same construction as Type G, but with twenty-four fibers per cable.

Type L -- Twenty-four-fiber, same construction as Type H, but with twenty-four fibers per cable.

The primary characteristics of multimode fiber are:

a. Capable of supporting approximately 500 MHz per kilometer;

b. Permits extension over two kilometers with data rate requirements less than 150 Mbps;

c. Permits, but does not require, the use of surface-emitting Light-emitting Diodes (LEDs).

10.4 Step-index Fiber. Step-index fiber may be of the single-mode or multimode variety. The single-mode variety has a relatively small diameter core (approximately 8 micrometers) and is used for high bandwidth applications over long distances. The multimode variety typically has a core diameter of 80-100 micrometers, but may have a larger core diameter. Multimode step-index fiber has an extremely limited bandwidth X length product, therefore seldom used in communications applications; it may be used for certain very short-distance links (e.g., in a LAN over distances less than about 50 meters). Multimode step-index fibers are therefore not applicable to FAA applications, which involve longer distances. The refractive index of the core of step-index fiber is nominally uniform throughout, from the fiber axis to the core-cladding boundary. At the core-cladding boundary the refractive index abruptly changes, in a step-wise manner, to a lower uniform value. Some special varieties of single-mode step-index fiber have multiple cladding layers of varying physical properties, for which the refractive index undergoes an abrupt change at each boundary.

10.5 Dual-window Fiber. Dual-window fiber is defined as any fiber that is optimized for operation in two windows. Multimode dual-window fibers are optimized for wavelengths in the vicinities of 850 and 1300 nanometers (0.85 and 1.3 micrometers). An engineering trade-off is required for the design of dual-window fiber, with respect to the modal distortion-limited bandwidth. In general, the specified modal distortion-limited bandwidth will not be identical for both windows. Dual-window capability permits greater flexibility in fiber applications. For example, FDDI standard ANSI X3T9.5 specifies an operating wavelength of 1300 nanometers, whereas the Ethernet-based standard ANSI/IEEE 802.3 specifies 850 nanometers. Either of these standards are capable of operating with a variety of dual-window fibers (e.g., 50/125 micrometer or 62.5/125 micrometer), as long as the respective specification's bandwidth and optical power budgets are met. Note that 62.5/125 micrometer dual-window fiber provides better power coupling with LEDs than 50/125 micrometer dual-window fiber and is preferred for applications less than 2 kilometers; single-mode fiber is preferred for distances greater than 2 kilometers. With 125 micrometer cladding, the 62.5 micrometer fiber is compatible with single-mode fiber and 50 micrometer connectors and mechanical splices.

10.6 Graded-index Fiber. The core of multimode graded-index fiber is composed of a series of concentric rings of silica that have successively lower refractive indices, reducing dispersion. The function of the refractive index with respect to the distance from the fiber axis is parabolic. This characteristic greatly reduces modal distortion, thereby improving the fiber's distortion-limited bandwidth by about two orders of magnitude. Refer to CCITT Recommendation G.651, Characteristics of a 50/125 Micrometer Multimode Graded-index Optical Fiber Cable - Transmission Media, for characteristics of multimode graded-index fiber cable.

Figure 10.6-1 shows generic cross-sections for single-mode and multimode optical fiber.

Figure 10.6-2 illustrates propagation modes for single-mode, multimode step-index and multimode graded-index fiber.

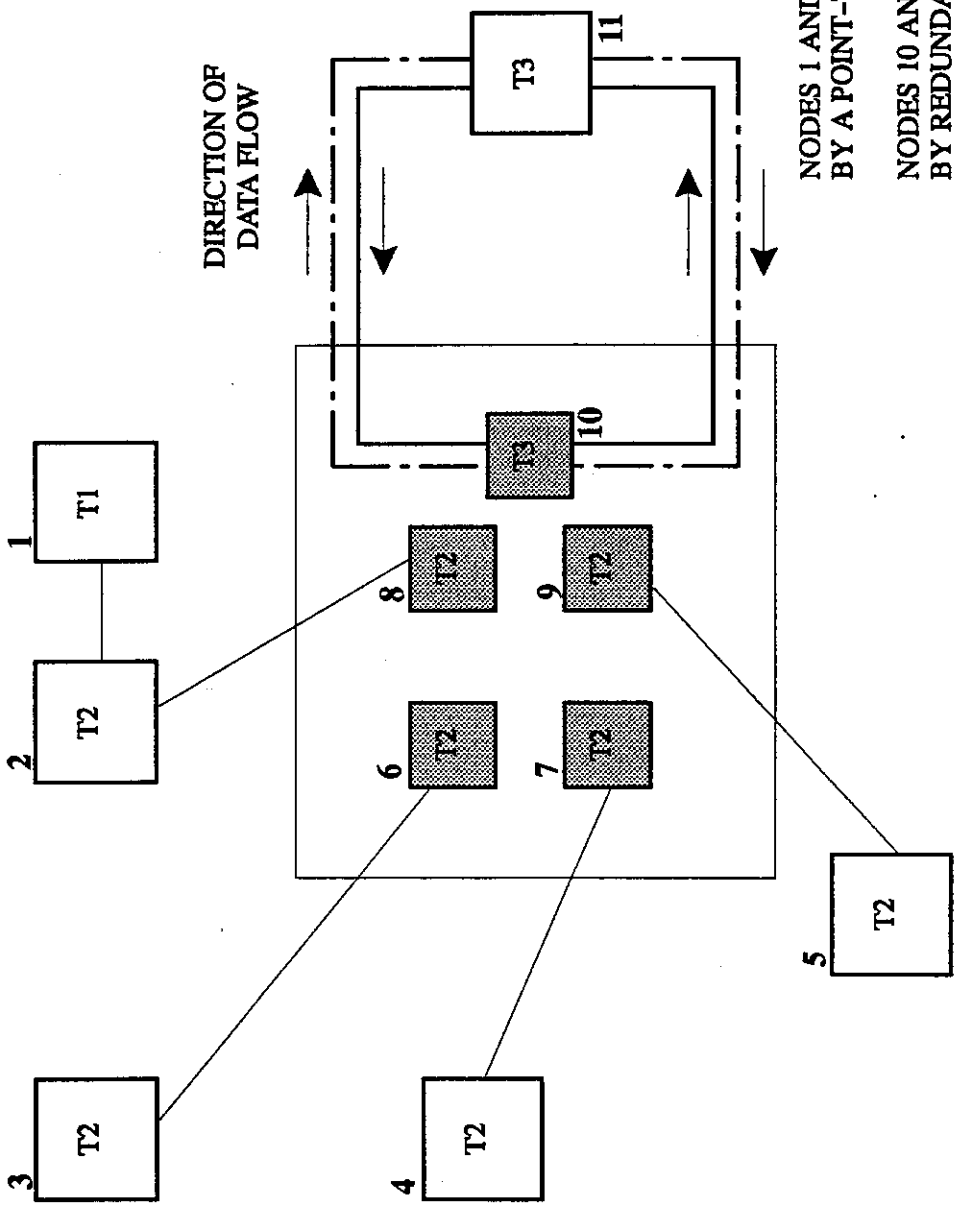

Figure 10.8.2-1 Representative Fiber Optic Point-to-Point Topology Consisting of T1, T2, and T3 Nodes

Refer to the following documents for fiber optic connector requirements:

ANSI/EIA/TIA 4750000	Generic Specification for Fiber Optic Connectors
TR-NWT-000326	Generic Requirements for Optical Fiber Connectors and Connectorized Jumper Cables, Issue 2

10.8.3 Star. Active and passive star topologies are discussed in the following two paragraphs.

10.8.3.1 Active Star. An active star topology incorporates an active star coupler to connect network users. Messages from one user to another must be processed by the active star coupler. Both electrical and opto-electronic components are required for this type of network. The primary disadvantage of the active star topology is that the active star coupler is a potential single point of failure.

10.8.3.2 Passive Star. A passive star topology is a star configuration that behaves like a bus configuration; i.e., transmissions from any device in the network are received by all other devices in the network. The number of devices that may comprise the passive star network and the distances between the passive star coupler and the network devices is dependent on the combined attenuation of optical connectors and optical cable as well as the number of ports at the coupler.

10.8.4 Linear Bus. The primary characteristic of the linear bus topology is that data is transmitted to all users simultaneously (broadcast). Network management for a linear bus system may be accomplished by several methods (e.g., token-passing bus). The primary advantage of the linear bus topology is that no single points of failure exist. Refer to IEEE 802.6, Distributed Queue Dual Bus (DQDB) Metropolitan Area Network (MAN).

10.9 Fiber Optic Network Standards. This section discusses the current and evolving fiber optic network standards, including Fiber Distributed Data Interface (FDDI), Fiber Optic Ethernet and Asynchronous Transfer Mode (ATM).

10.9.1 Fiber Distributed Data Interface (FDDI). FDDI is a token ring LAN and MAN protocol that is defined primarily by ANSI X3T9.5 (Fiber Distributed Data Interface Standard), as well as ISO/IEC standards 8802-2, 8802-3, 8802-4, 8802-5. FDDI supports a total operational data rate of up to 100 Mbps. Hub architectures, in which the end users transmit data when they receive the token from the hub computer or server, are also supported by FDDI. The FDDI counter-rotating dual ring structure is illustrated in Figure 10.9.1-1.

The FDDI standard (ANSI X3T9.5) defines communications requirements in Layers 1 (Physical) and 2 (Data Link) of the Open System Interconnection (OSI) model, where Layer 2 is subdivided into the Medium Access Control (MAC) (refer to IEEE 802.1I) and the Logical Link Control (LLC) (refer to IEEE 802.2). FDDI also defines the Station Management (SMT) function for Layers 1-7 of the OSI model. As specified in ANSI X3.166, the physical media for FDDI may be fiber, copper, etc. This characteristic of FDDI allows network segments to utilize different media if desired. Refer to ANSI X3.139, ANSI X3.148 and ANSI X3.166 for FDDI OSI protocol requirements.

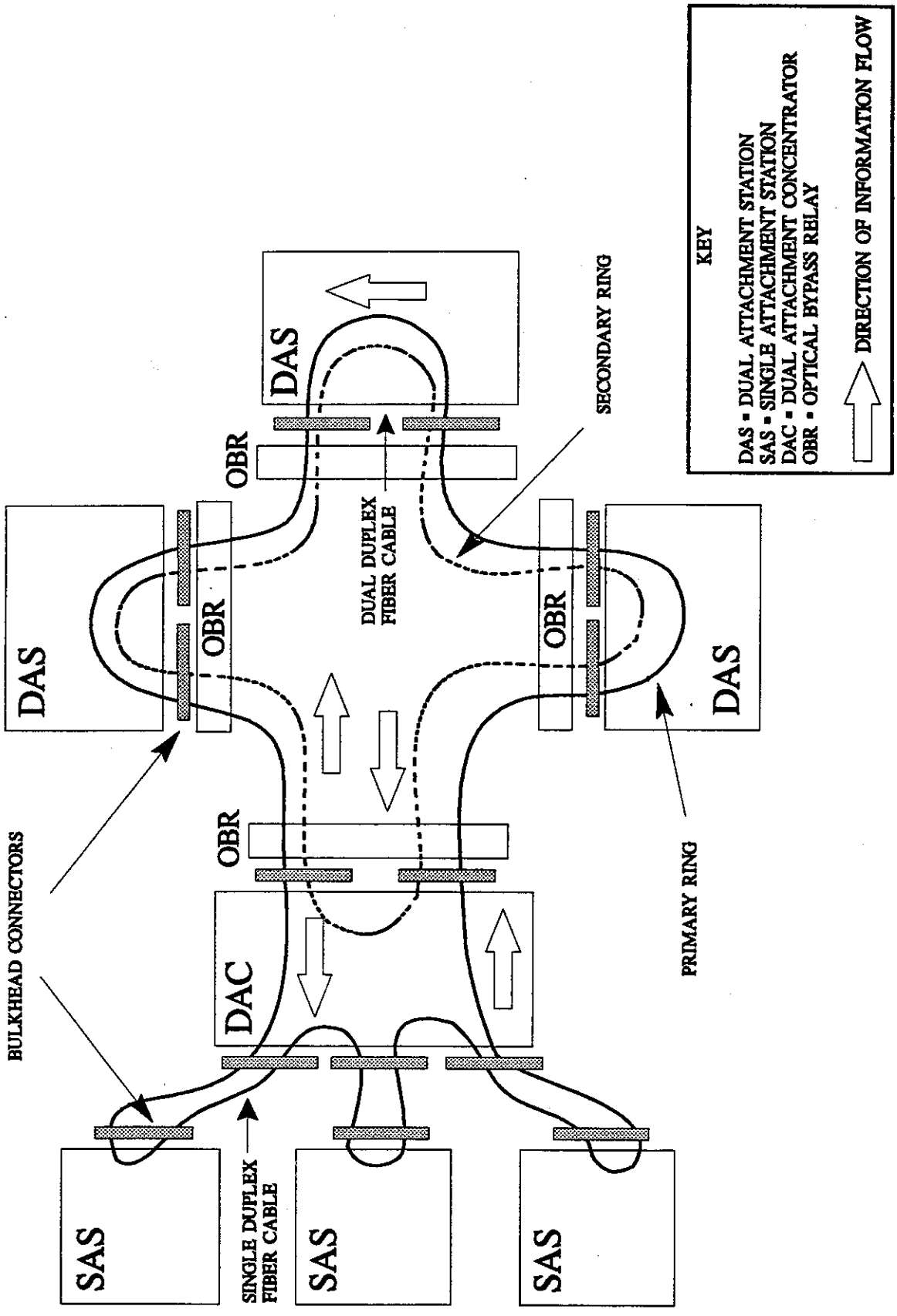

Figure 10.9.1-1 FDDI Counter-rotating Dual Ring Structure

When acquiring FDDI systems and equipment, it is highly recommended that NAS project personnel ensure that the potential contractor is a member of a recognized interoperability group (e.g., ANSI X3T9.5 Committee for Standards; Advanced Network Test Center (ANTC), Sunnyvale, California; Interoperability Lab (IOL), University of New Hampshire, New Hampshire; European ANTC, Technical University of Berlin, Berlin, Germany).

At a minimum, the following documents, some of which are referenced in other sections of this standard, shall be used as references when FDDI networks are considered:

ANSI X3T9.5	Fiber Distributed Data Interface Standard
ANSI T1.105	Telecommunications — Digital Hierarchy — Optical Interface Rates and Formats Specifications (SONET) (FDDI and STS Path Signal Level) (ECSA); Supplement T1.105A
ANSI X3.139	Information Systems — Fiber Distributed Data Interface (FDDI) — Token Ring Medium Access Control (MAC)
ANSI X3.148	Information Systems — Fiber Distributed Data Interface (FDDI) — Token Ring Physical Layer Protocol (PHY)
ANSI X3.166	Information Systems — Fiber Distributed Data Interface (FDDI) — Token Ring Physical Layer Medium Dependent (PMD)

Table 10.9.1-1 presents the ANSI, ISO and IEEE standards applicable to fiber optic LANs and MANs.

Table 10.9.1-1 Fiber Optic LAN and MAN Standards

SUBJECT	ANSI	IEEE	ISO
FDDI Standard	X3T9.5		
FDDI Media Access Control	X3.139	802.1I	9314-2
FDDI Physical Layer	X3.148		9314-1
FDDI Physical Layer Media Dependent	X3.166		9314-3
FDDI Hybrid Ring Control			9314-5
FDDI Logical Link Control		802.2	8802-2
CSMA/CD and Physical Layer		802.3	8802-3
Token Passing Bus and Physical Layer		802.4	8802-4
Token Ring Access Method and Physical Layer		802.5	8802-5
Distributed Queue Dual Bus MAN		802.6	

10.9.2 Fiber Optic Ethernet. IEEE 802.3 specifies the algorithm for Carrier Sense Multiple Access/Collision Detection (CSMA/CD) algorithm used in the original 10 Mbps Ethernet standard, implemented using coaxial cable as the physical medium. Fiber Optic Ethernet is the implementation of the Ethernet standard using fiber optic cable as the physical medium. Like FDDI, Ethernet defines the Physical and Data Link layers of the OSI model. The original Ethernet specification contained timing constraints that were based on the maximum practical length (i.e., because of transmission losses) of a metallic coaxial transmission line between a multiport repeater and a node. This length is less than 1 kilometer. State-of-the-art optical multiport repeaters employ timing circuitry that facilitates transmission distances up to 4 kilometers without false declarations of collisions.

Fast Ethernet, presently under development, will have the capability to transfer data at rates up to 100 Mbps. Switching arrangements will allow LANs and MANs to accommodate both Fiber Optic Ethernet and FDDI.

10.9.3 Asynchronous Transfer Mode (ATM). ATM is a protocol standard under development for fast packet switching at very high transmission data rates. ATM and FDDI are intended to be interoperable; however, additional equipment (e.g., bridges) may be required to integrate ATM into existing FDDI networks. The primary application for ATM is multimedia (integrated voice, data and video). ATM standards are expected to be finalized by 1996.

10.10 Fiber Channel. Fiber channel is a fiber optic communications standard based on ANSI X3T9.3, which defines the requirements for high speed packet switched networks using fiber optics. Fiber channel is a developing network standard that allows network nodes to be located up to several kilometers from the switch, supports up to 100 Mbps and has the capability to support a very large number of users.

10.11 Other Protocol Considerations. Other standards that shall be considered in designing and implementing fiber optic systems and equipment are discussed in the following paragraphs.

10.12 Government Open Systems Interconnection Profile (GOSIP). GOSIP is a common set of Open System Interconnection (OSI) data communications protocols that enable systems developed by various vendors to interoperate and enable users of different applications on these systems to exchange information. Inclusion of FDDI in GOSIP is currently delayed. If FDDI products are procured prior to GOSIP finalization, vendors shall provide Station Management updates to final GOSIP requirements (e.g., by shipping new Read-only Memory (ROM)). FIPS PUB 146-1 contains the requirements for GOSIP.

10.13 Synchronous Optical Network (SONET). SONET defines the digital hierarchy for fiber optic interfaces. This SONET hierarchy is based on a family of transmission rates – 155 Mbps, 622 Mbps and 2.48 Gbps. SONET employs synchronous byte-interleaved multiplexing and supports FDDI.

SONET standards include, but are not limited to, ANSI T1.105, ANSI T1.106, and Bellcore technical reports TR-NWT-000253, TR-TSY-000496 and TR-NWT-000917.

10.14 Safety. All fiber optic applications shall meet the requirements contained in NFPA 70, National Electric Code, unless specifically exempted. Suitable precautions shall be designed into the system and included in operating and maintenance procedures to preclude catastrophic hazards to personnel or equipment.

(THIS PAGE INTENTIONALLY LEFT BLANK)

APPENDIX II

20. TAILORING OF STANDARDS

20.1 General.

This appendix contains general instructions for selecting and tailoring the Standard for Fiber Optic Telecommunication Systems and Equipment for use in FAA acquisitions, procurements and evaluations. Tailoring is the process of selecting appropriate portions of a standard for citation in other documents (e.g., acquisition documents). Tailoring may occur at the major section, subsection or paragraph level and may consist of the adoption, elimination, modification or substitution of requirements.

The Standard for Fiber Optic Telecommunication Systems and Equipment may be cited in its entirety if communications interfaces are not known in advance (i.e., are to be determined through planning, system engineering and analysis). Citing the standard in its entirety does not restrain the contractor from requesting tailoring later in the program.

The contractor may request or recommend tailoring at any time during acquisition, update or modification contracts or during advanced development or research contracts. The contractor may also request waivers and offer alternatives for the applicable design criteria and guidelines, respectively.

If the procurement is for NDI or COTS items, the tailoring of the standard is relatively straight-forward. A tailored checklist would be provided to the contractor, who in turn may submit equipment bids or use the tailored checklist as part of an equipment selection process.

Tailoring may be performed by the FAA only or in cooperation with the selected contractor.

(THIS PAGE INTENTIONALLY LEFT BLANK)