Copy 1

FAA-ADS- 58

INVESTIGATION OF TURBOJET ENGINE CHARACTERISTICS DURING BIRD INGESTION

TECHNICAL REPORT

NAFEC
LIBRARY
MAR 1 1966

JANUARY 1966

by

Donald M. Millar

National Aviation Facilities Experimental Center

FEDERAL AVIATION AGENCY

AIRCRAFT DEVELOPMENT SERVICE

COPY 1

F.A.A., NAFEC, Aircraft Development Service.
Investigation of Turbojet Engine Characteristics During Bird Ingestion, by Donald M. Millar.
Technical Report. January 1966.
17 p. (ADS-58)

Project No. 520-004-04X.

1. Birds Ingestion. 2. Turbojet engines.
3. Jet Engines--Ingestion--Testing.
I. Millar, Donald M.

INVESTIGATION OF TURBOJET ENGINE CHARACTERISTICS DURING BIRD INGESTION

TECHNICAL REPORT
ADS - 58

by
Donald M. Millar

National Aviation Facilities Experimental Center

January 1966

This report was prepared by NAFEC
under Project No. 520-004-04X for the
Aircraft Development Service.

This report has been approved for general availability. It does not necessarily reflect FAA policy in all respects and it does not, in itself, constitute a standard, specification, or regulation.

TABLE OF CONTENTS

	Page
SUMMARY	v
INTRODUCTION	1
DESCRIPTION	1
DISCUSSION AND RESULTS	3
CONCLUSIONS	6
REFERENCES	17

LIST OF TABLES

Table		Page
I	Instrumentation Summary	7
II	J57 Bird-Ingestion Test Series	9
III	Transient and Residual Performance Summary . .	10

LIST OF ILLUSTRATIONS

Figure		Page
1	Engine Installation	11
2	Representative Bird Distribution Obtained With Two-Inch Gun Barrels - Test No. 5 . .	12
3	Transient Engine Performance - Test No. 4 . .	13
4	Transient Engine Performance - Test No. 5 . .	14
5	Engine Inlet Damage Through Test No. 5 . . .	15
6	Engine Inlet Damage Through Test No. 6 . . .	16

LIST OF SYMBOLS

F_n	net thrust, pounds
N_1	low pressure compressor rotational speed, rpm
N_2	high pressure compressor rotational speed, rpm
Pamb	ambient pressure
P_{s3}	static pressure, low pressure compressor discharge
P_b	burner pressure
P_{t7}	total discharge pressure
T_{t7}	total discharge temperature
W_f	engine fuel flow, pounds/hour
TSFC	thrust specific fuel consumption, pounds of fuel per hour per pound of thrust

FEDERAL AVIATION AGENCY

TECHNICAL REPORT ADS - 58

Investigation of Turbojet Engine Characteristics During Bird Ingestion

By Donald M. Millar, National Aviation Facilities Experimental Center

SUMMARY

Tests were conducted to determine specific reactions to the ingestion of birds by a twin-spool axial-flow turbojet engine.

Various quantities of birds were propelled into the engine inlet at velocities on the order of 125 knots by a compressed air gun. The engine was subjected to ingestion of a total of 59 starlings in densities ranging from 3 to 20 birds per test and one sea gull.

Transient and steady-state engine performance was monitored and recorded during and following ingestion sequences.

An abrupt fluctuation in engine performance was sustained in all tests conducted with subsequent engine recovery and stabilization being attained in approximately two seconds, with the exception of one test which required manual manipulation of engine controls prior to engine recovery. This test involved the ingestion of 20 birds and resulted in a continuous compressor stall condition until corrective action was taken.

Residual contamination of the engine resulted in some decreases in overall engine efficiency.

Substantial damage was incurred by the inlet guide vanes and the first stage compressor rotor blades during the course of the program.

INTRODUCTION

The purpose of the test program covered by this report was to determine the reactions of a turbojet engine to the ingestion of various quantities of birds. The primary objective of the project is the determination of specific performance reactions induced during and following bird ingestion incidents. A secondary objective is the evaluation of the structural and mechanical integrity of the test article when subjected to bird impact.

The test article selected for this phase of the project was a J57-P-37 turbojet engine. This particular model is similar to current commercial turbojet engines of the JT3C series.

The bird species selected for ingestion, namely starlings and sea gulls, were representative of that range of wild fowl to be encountered in the aircraft take-off and landing regime. In addition, birds of these sizes have been involved in numerous in-flight engine ingestion incidents. Some of the latest statistics on bird ingestions are tabulated in Systems Research and Development Service Report No. RD-65-73, titled, "Biological Studies of the Problems of Bird Hazard to Aircraft." The report indicates that over 100 such incidents involving turbojet and turboprop aircraft occurred during the period from January 1961 to June 1964. The sea gull was the frequent offender.

The J57 test series is one phase of a continuing effort to define the potential hazard of bird ingestion to various gas turbine power plants. Initial FAA efforts in this field commenced during January 1961. Previous test programs conducted under this project are covered by FAA Technical Reports, No. ADS-2, titled, "Wind Tunnel Tests of Allison Model 501-D13 Turboprop Engine Characteristics During Bird Ingestion" and No. ADS-30, titled, "Test of Pratt and Whitney Model YTF33-P-1 Turbofan Engine Characteristics During Bird Ingestion."

DESCRIPTION

The J57-P-37 is an axial-flow turbojet engine with a 16-stage split compressor and a 3-stage split turbine rated at 10,000 pounds take-off thrust.

For this test program the engine was mounted in a thrust stand located at the test area of the NAFEC Compressed Air Guns Facility. The thrust stand is a Naval Air Turbine Test Satation design. Eight 2-inch internal diameter, 10-foot long gun barrels, and one 6-inch internal diameter, 40-foot long gun barrel were directed at the engine inlet. These guns were used to propel various quantities of starlings into the engine inlet at velocities between 120 and 130 knots. Individual control mechanisms were

installed on each barrel which, upon being energized, discharged compressed air from a reservoir through one or more selected gun barrels at predetermined pressures for a desired bird-impact velocity. Figure 1 illustrates the test article installation and gun barrel locations relative to the engine inlet during the test series.

A mobile control van was used for engine operation and data collection purposes. Table I contains a description of the instrumentation equipment utilized to monitor and record engine parameters and environmental conditions.

In addition to the referenced data collection equipment, high speed motion picture cameras recorded phenomena occurring at various locations throughout each ingestion run. These included forward and side coverage of the engine inlet and side coverage of the exhaust nozzle. The side coverage cameras were also utilized to monitor bird-impact velocities. In addition, still photographs were taken as required of visually apparent engine damage following each ingestion.

Table II contains a description of all tests conducted during the project. Two dummy tests (1' and 5') were run without firing any birds into the engine. These were made to determine what effect, if any, the air discharge had on engine performance.

The procedure for each ingestion run was as follows:

1. Selection and thawing of required bird quantity.

2. Weighing and inserting of bird(s) into barrel(s) selected for firing.

3. Conduct pre-ingestion engine performance calibration run.

4. Initiation of gun(s) discharge sequence (engine operating at take-off power).

5. Conduct post-ingestion engine performance calibration run.

6. Engine shutdown and inspection of test article.

Step No. 4 above involved the activation of a cam-type controller. This controller operated as a sequencing device to allow for camera acceleration prior to the bird(s) discharge, and also energized the firing mechanism for the gun(s).

For the first five ingestion tests, the eight 2-inch barrels were utilized to propel the birds into the engine inlet. These tests involved

quantities of starlings ranging from 3 to 20 at impact velocities on the order of 125 knots. One or more starlings, as required, were loaded through the muzzle of individual barrels and rammed to the breech end without the insertion of any wadding or packaging material. The eight tubes were discharged in a random pattern at time intervals of approximately 0.01 seconds. At an airspeed of 125 knots, this would correspond to a 2½-foot spatial distribution between bird groups. Figure 2 illustrates the actual bird distribution obtained with this system during Test No. 5.

One sea gull ingestion test was conducted which involved the discharge of one sea gull from the 6-inch barrel into the engine at approximately 125 knots. For this test the sea gull was packaged in a styrofoam container which was inserted in the gun breech. Upon activation of the firing mechanism, compressed air was released behind the styrofoam container accelerating this package to the selected velocity. The styrofoam container was caught by a choke device mounted immediately downstream of the gun muzzle, thereby allowing only the bird carcass to continue into the engine.

DISCUSSION AND RESULTS

The ingestion of birds by the test article induced an abrupt fluctuation in engine operation resulting in major power losses. In five of the six tests conducted the engine recovered to operating conditions slightly below pre-ingestion values in approximately two seconds. Figure 3 is representative of the transient performance recorded during these five tests. In Test No. 5 which involved the ingestion of 20 starlings, engine power lever manipulation was required in order to remove the engine from a hung stall condition. Following this procedure, which involved reducing the power lever to the idle detent and then advancing same, engine recovery was accomplished to a level comparable to that attained in the previously referenced tests. Figure 4 shows the transient performance and the recovery sequence recorded during Test No. 5.

The results of Test No. 5 are significant for two reasons. The first is, that without initiating corrective action the over-temperature condition associated with the compressor stall would probably have resulted in a turbine blade failure through overheating. Secondly, the corrective action taken was directed at power recovery, which was attained, as against immediate engine shutdown. No attempt was made to optimize the time at which power lever movements were made or the rate at which such action was taken. However, in extrapolating the results of this test to a multi-engine bird ingestion incident, an awareness of such procedures could alleviate a potentially critical situation.

Although any in-flight disruption in engine performance is undesirable, it is considered that the performance effects induced by bird ingestion during this test series were generally mild, with the exception of Test No. 5. This is substantiated by the values of "Time to Stabilized F_n" listed in Table III.

Table III is a summary of the test series with the transient and residual engine performance changes in tabular form. It was predetermined that the most significant of the quantities tabulated for any one test would be the duration of the transients induced as a result of the bird ingestion. Therefore, the value of "Time to Stabilized F_n" was utilized to delineate the general degree of transients induced during each test run. This period was defined as that time from which the initial loss in engine exhaust gas total pressure commenced to that time at which 90 percent of the post ingestion stabilized thrust level was attained. On the basis of the values listed it was evident that the test article was not critically vulnerable during the bird ingestion incidents simulated.

No evidence of engine flameout (loss of combustion) was recorded during any of the six test runs conducted.

Through analysis and comparison of engine performance data obtained prior to and following each ingestion test, a determination of the residual effects caused by bird ingestion was made. In all of the test runs a slight increase in thrust specific fuel consumption, low pressure compressor speed, high pressure compressor speed, and exhaust gas total temperature (average) was noticed. This could be attributed to engine/compressor contamination and/or deformation. Following Test Numbers 2, 4 and 5 the test article was cleaned according to the engine manufacturer's applicable instructions in an attempt to ascribe the cause of residual performance effects. Although this process did not restore engine performance to previously established baselines, the final differences were relatively small. On this basis the major cause of residual performance changes are attributed to the adverse effects on the aerodynamic and thermodynamic efficiency caused by deposits of bird remains throughout the compressor section. This results in an additional temperature rise over the normal temperature rise which accompanies any pressure rise while at the same time resulting in less pressure output. Due to this factor it is apparent that to maintain a certain thrust output following an ingestion sequence higher compressor speeds would be required. At the same time a higher fuel flow would result. This is what occurred following the ingestion runs.

Engine damage was sustained by the test article during each test run, which did contribute to the aforementioned residual performance loss. Inspection was limited to the first three compressor stages. Figure 5 illustrates the type of damage incurred through starling ingestion. This

photograph was taken following Test No. 5, therefore the damage shown is the cumulative effect of the ingestion of 59 starlings. Although such damage would require repair and/or overhaul of this section, continued operation of the engine during an in-flight situation would not be compromised.

Approximately one minute after fuel cutoff following the post-ingestion engine calibration associated with Test No. 6 (one sea gull), a loud, screeching noise was heard emanating from the engine. The low pressure compressor suddenly halted while the high pressure compressor continued a normal coastdown. Inspection of the engine showed the damage illustrated in Figure 6. The extremely deformed rotor blade prevented rotation of the low pressure compressor by hand. Because the engine was operated at various power settings for approximately 30 minutes following the sea gull ingestion, it is difficult to assess the seriousness of such an ingestion in regards to continued in-flight engine operation. However, it is evident on the basis of this and previous tests (Refs. 2 and 3) that more severe damage would occur during a sea gull ingestion than during a starling ingestion incident. This would be expected as the localized impact energy would be much higher for a sea gull ingestion than for a multiple starling ingestion.

Steady-state engine vibration characteristics recorded throughout the test program showed no significant difference in relative levels of amplitude for either individual tests (pre-ingestion values versus post-ingestion values) or for initial test runs in comparison with latter runs. Therefore, it can be expected that in-flight bird ingestion incidents comparable to those simulated in this test program would not cause a change in engine vibration characteristics.

Intermittent torching was observed on motion picture film viewing the engine exhaust nozzle area. This phenomenon occurred during all test runs in varying degrees, generally consisting of several bursts of flame extending approximately 15 feet aft of the exhaust nozzle. However, during Test No. 5 bursts of flame were recorded for the duration of the film coverage, which was on the order of two seconds, and it is expected that this torching continued until the power recovery operation commenced. The exposure of the turbine section to the over temperature conditions associated with this phenomenon were previously discussed.

During those test runs in which an air discharge was conducted without a bird (or birds) loaded into the barrel (or barrels), there was no perceptible fluctuation in any of the recorded engine parameters. From this, it was apparent that the air discharge was not a contributing factor to transient performance effects evidenced during the six bird-ingestion runs conducted.

CONCLUSIONS

It is concluded that:

1. The ingestion of birds by the J57 Turbojet engine will induce performance fluctuations for a duration of at least two seconds.

2. The ingestion of birds by a J57 Turbojet or equivalent engine in flight will incur the possibility of sustaining damage to the inlet guide vanes and first stage compressor rotor blades, particularly when birds the size of a sea gull are ingested. Such damage is detectable by visual inspection of the engine.

3. The J57 Turbojet engine was not susceptible to flameout during the simulated bird ingestion incidents.

4. Manual manipulation of the power lever can assist engine recovery from a hung stall condition resulting from bird ingestion.

TABLE I

INSTRUMENTATION SUMMARY

Parameter	Sensor*	Transducer	Conditioning Equipment	Record **	Accuracy
P amb (Pt2)	Barometer	Precision Micro Barometer, Model PMB-1	Not Applicable	Visual	± 0.01-in. hg.
T amb (Tt2)	Thermometer	Taylor Hi-Lo Thermometer	Not Applicable	Visual	± 1° F.
Ps3	Static Pressure Tap	Statham 0-50 psia	CEC Bridge Balance, Type 8-108	CEC 5-119 Oscillograph	± 0.5-in. hg.
P_b	Engine Probe	Statham 0-100 psia	CEC Bridge Balance, Type 8-108	CEC 5-119 Oscillograph	± 0.5-in. hg.
P_{t7}	Engine Probes	A/C Gage	Not Applicable	Visual	± 0.1-in. hg.
	Engine Probes	Statham 0-50 psia	CEC Bridge Balance, Type 8-108	CEC 5-119 Oscillograph	± 0.5-in. hg.
F_n	Thrust Stand	BLH Load Cell Model C3P2B-20K	BLH Disc Indicator, Model 12-5-5D	Visual	± 10 lbs.
		BLH Load Cell, Model C3P2B-20K	BLH Disc Indicator, Model 12-5-5D	CEC 5-119 Oscillograph	± 20 lbs.
N_1	Tach Generator	HP Model 508C Tach Generator	Audio Amplifier and HP500B Frequency Meter	CEC 5-119 Oscillograph	± 25 rpm
		HP Model 508C Tach Generator	Berkley Electronic Counter, Model 5500	Visual	± 0.5 rpm
N_2	Tach Generator	General Electric Dual Tach Model AAB-1	A/C Gage	Visual	± 0.5 percent
W_f	Volumetric Flowmeter	Cox AN20 Flowmeter	Cox Flow Indicator Model 1643	Visual	± 20#/hr.

TABLE I (Continued)

INSTRUMENTATION SUMMARY

Parameter	Sensor *	Transducer	Conditioning Equipment	Record **	Accuracy
T_{t7} (avg.)	Engine Probes	C-A Thermocouple Harness	Pace Thermocouple Control System, Model TC-2	CEC 5-119 Oscillograph	$\pm$ 10° F.
T_{t7} (1)	Engine Probe	C-A Thermocouple	A/C Gage	Visual	$\pm$ 10° F.
T_{t7} (2)	Engine Probe	C-A Thermocouple	Pace Thermocouple Control System, Model TC-2	CEC 5-119 Oscillograph	$\pm$ 10° F.
T_{t7} (3)	Engine Probe	C-A Thermocouple	Pace Thermocouple Control System, Model TC-2	CEC 5-119 Oscillograph	$\pm$ 10° F.
T_{t7} (4)	Engine Probe	C-A Thermocouple	Pace Thermocouple Control System, Model TC-2	CEC 5-119	$\pm$ 10° F.
Fuel Boost Pressure	Fuel Line Tap	Fluid Pressure Gage	Not Applicable	Visual	$\pm$ 1 psi
Fuel Temperature	Fuel Line Probe	I-C Thermocouple	Potentiometer Pyrometer	Visual	$\pm$ 5° F.
Oil Temperature	Engine Probe	Resistance Thermometer	A/C Temperature Gage	Visual	$\pm$ 5° F.
Oil Pressure	Engine Tap		A/C Pressure Gage	Visual	$\pm$ 1 psi
Vibration Characteristics	Vibration Pickup	CEC Model 4-103	CEC Type 1-117 Vibration Meter	Visual	$\pm$ 10 percent FS

* All "Engine Probe(s)" engine-furnished equipment.
** All "Visual Record" for steady-state values only.

TABLE II

J57 BIRD INGESTION TEST SERIES

Test No.	Bird Quantity	Total Bird Weight (lb.)	Total Bird Weight (oz.)	Bird Impact Velocity (knots)	Ingestion Sequence	Gun Configuration
1	3 Starlings	0	7-1/8	125*	Sequenced	Three 2-inch
1'	Dummy Test Run, eight 2-inch Tubes, Air Discharge					
2	8 Starlings	1	3-1/2	125*	Sequenced	Eight 2-inch
3	12 Starlings	1	11-3/8	125*	Sequenced	Eight 2-inch
4	16 Starlings	2	10	130**	Sequenced	Eight 2-inch
5	20 Starlings	4	8-3/4	120**	Sequenced	Eight 2-inch
5'	Dummy Test Run, 6-inch Tube, Air Discharge					
6	1 Sea Gull	1	8	125*	Simultaneous	6-inch

* Determined from appropriate pressure versus velocity tube calibration tables (± 10 knots)
** Determined from high-speed motion picture film (± 5 knots)

TABLE III

TRANSIENT AND RESIDUAL PERFORMANCE SUMMARY

Test No.	Bird Quantity	ΔP_{t7} (in. hg.)	Time to Min P_{t7} (sec.)	Time to 90% Stabilized F_n (sec.)	ΔN_1 (rpm)	ΔN_2 (rpm)	ΔP_b (in. hg.)	ΔT_{t7} (^oC)	ΔW_f (lb/hr)	ΔTSFC (avg.)** lb/lb-hr.
1	3 Starlings	-35	0.07	1.1	*	-125	-240	+80	-520	+.02
2	8 Starlings	-38	0.10	1.3	-880	*	-250	+120	-390	+.01
3	12 Starlings	-39	0.08	1.7	-580	*	-250	+130	-460	+.01
4	16 Starlings	-37	0.09	1.0	-1080	-270	-240	+180	-390	+.02
5	20 Starlings	-34	0.08	10.5**	-1790	-630	-240	+675***	-910	+.05
6	1 Sea Gull	-39	0.09	0.7	-410	-50	-250	+40	-260	+.005

* Instrumentation Failure
** Includes Manual Manipulation of Engine Controls
*** $\pm$ 50° C Due to Improper Recording Adjustment

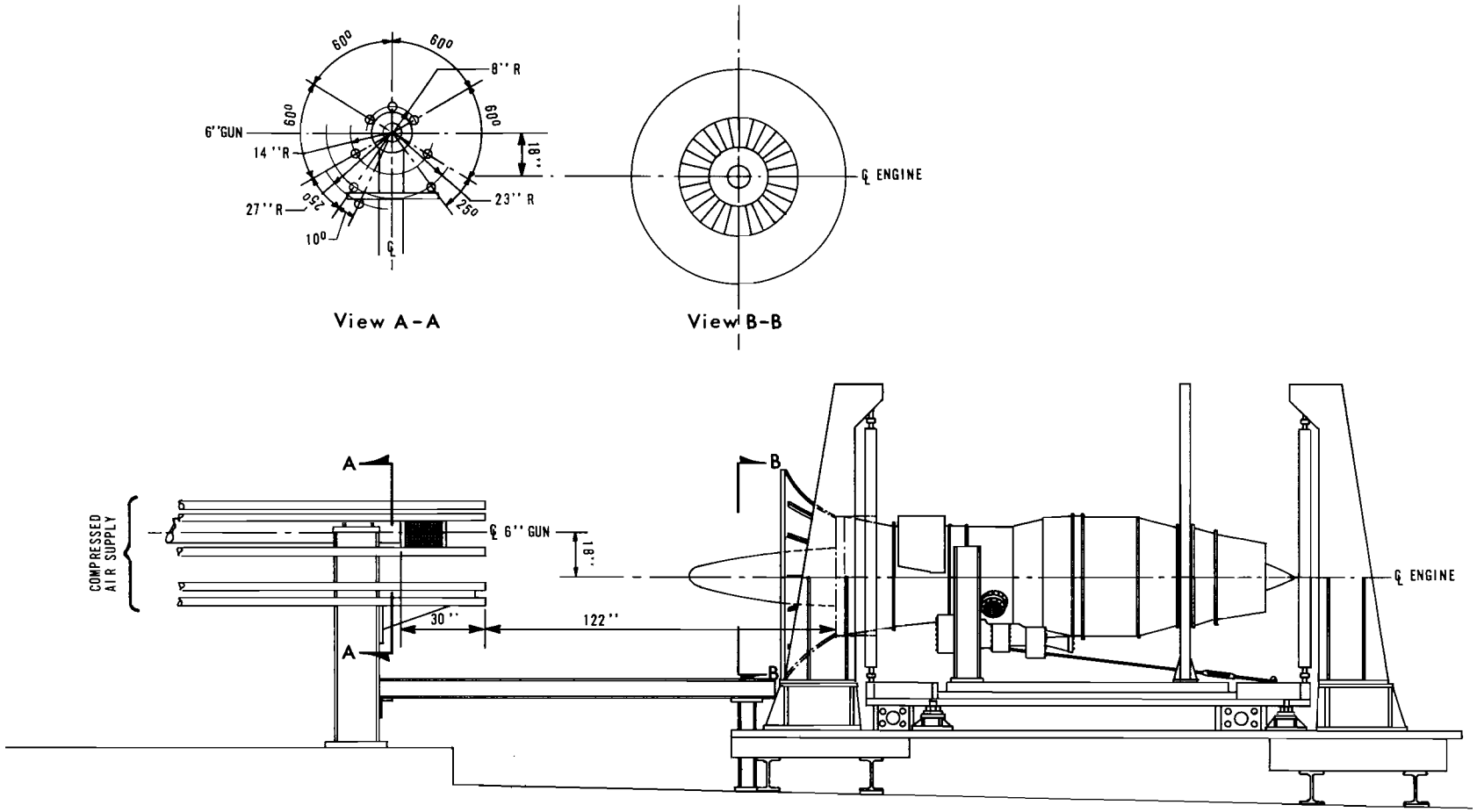

FIG. 1 ENGINE INSTALLATION

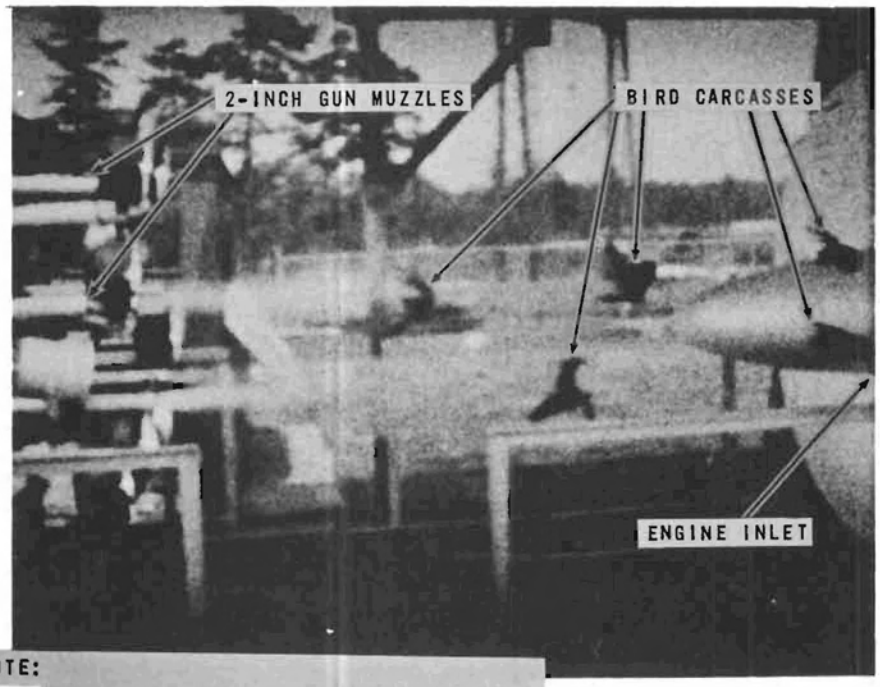

NOTE:
REPRODUCED FROM HIGH SPEED 16 MM FILM

FIG. 2 REPRESENTATIVE BIRD DISTRIBUTION OBTAINED WITH TWO-INCH GUN BARRELS - TEST No. 5

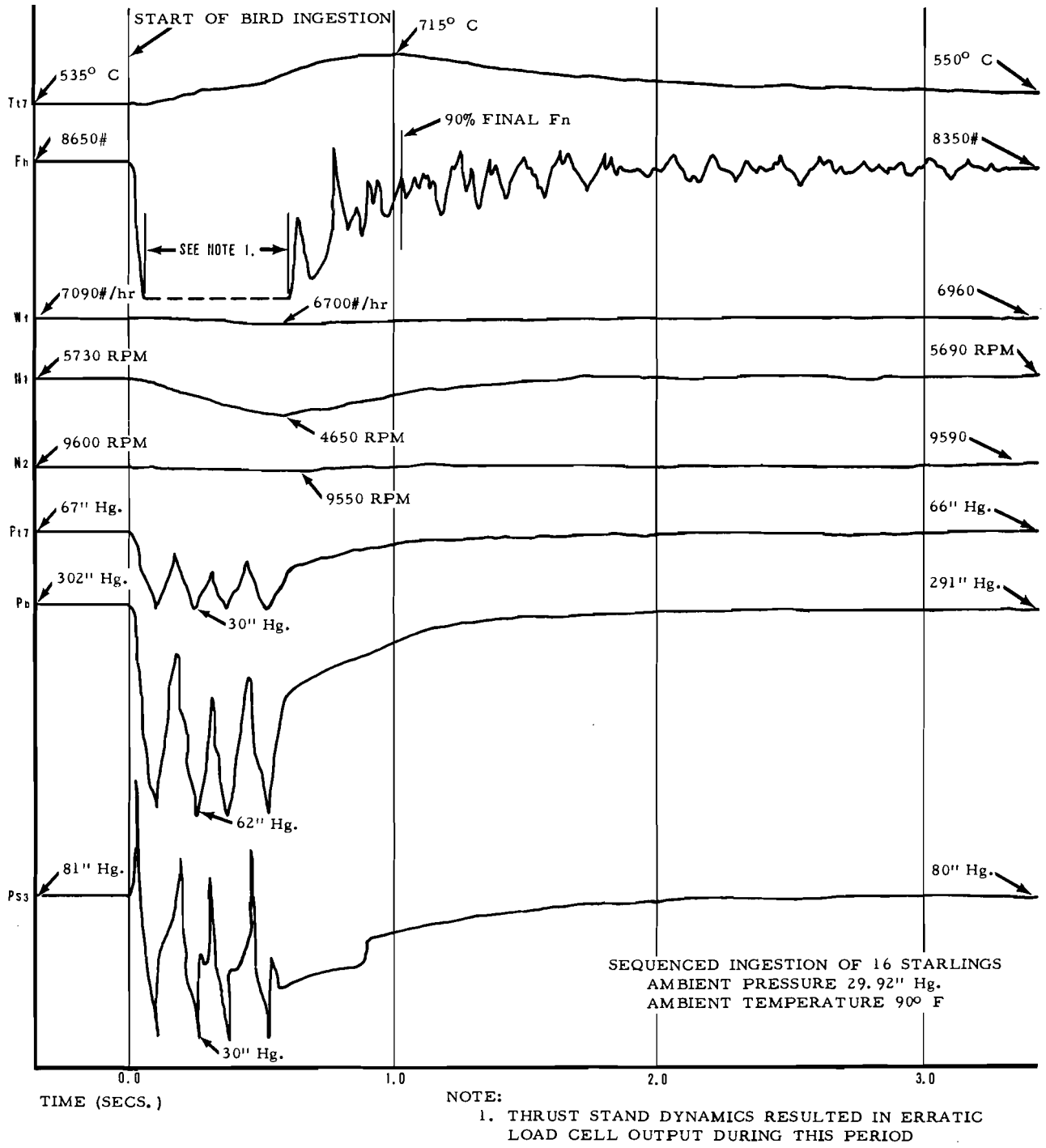

NOTE:
1. THRUST STAND DYNAMICS RESULTED IN ERRATIC LOAD CELL OUTPUT DURING THIS PERIOD

FIG. 3 TRANSIENT ENGINE PERFORMANCE - TEST No. 4

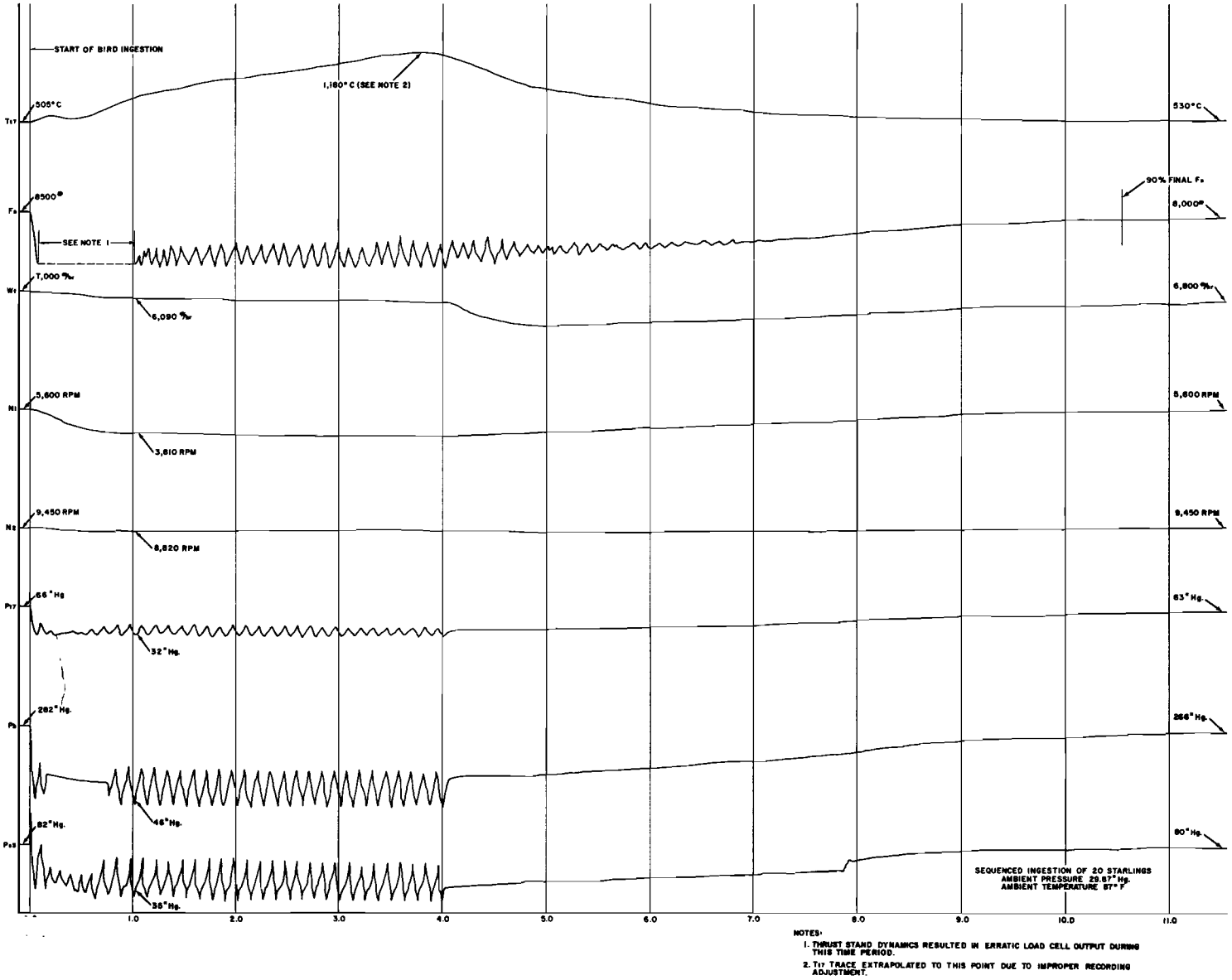

NOTES:
1. THRUST STAND DYNAMICS RESULTED IN ERRATIC LOAD CELL OUTPUT DURING THIS TIME PERIOD.
2. T_{17} TRACE EXTRAPOLATED TO THIS POINT DUE TO IMPROPER RECORDING ADJUSTMENT.

FIG. 4 TRANSIENT ENGINE PERFORMANCE - TEST No. 5

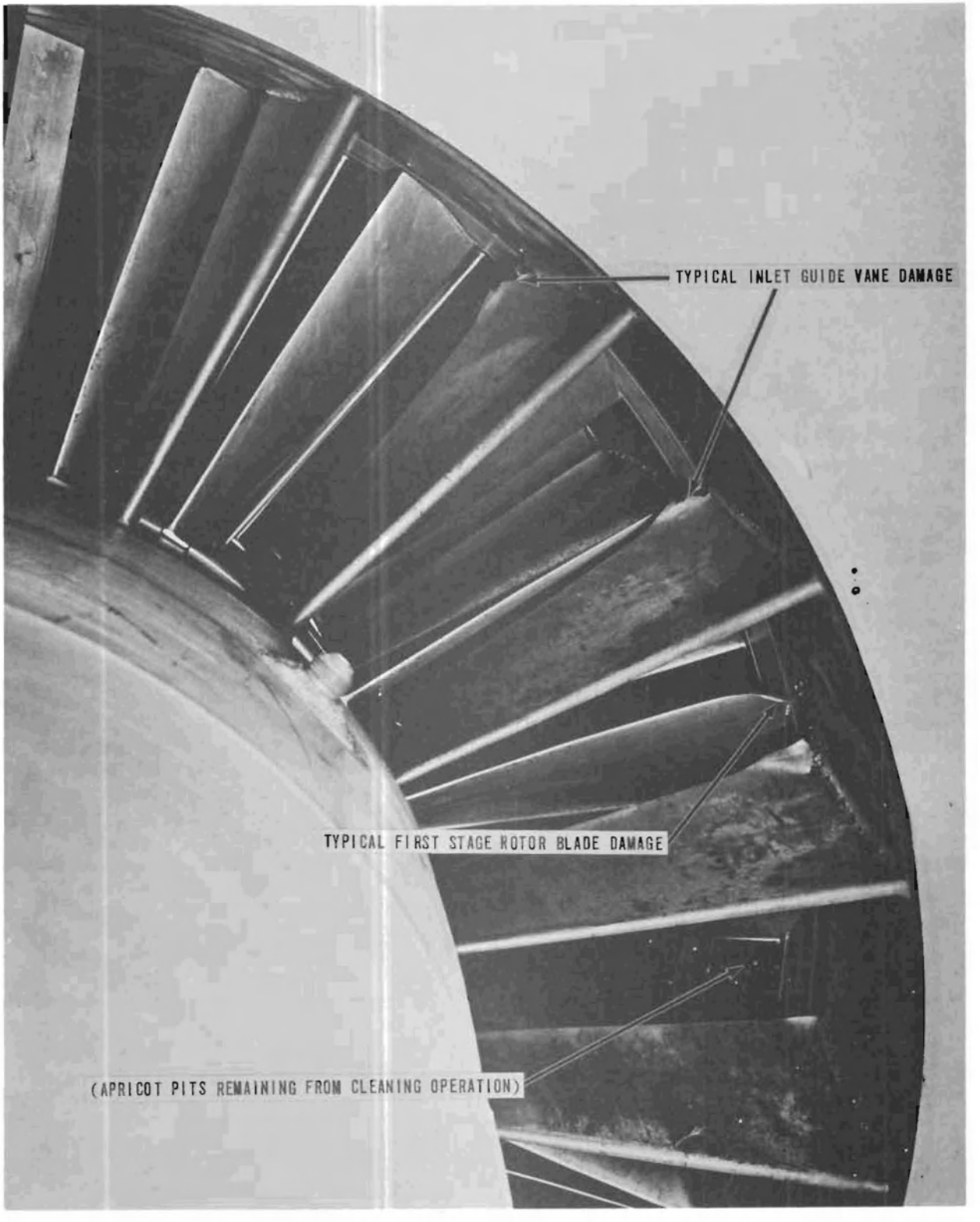

FIG. 5 ENGINE INLET DAMAGE THROUGH TEST No. 5

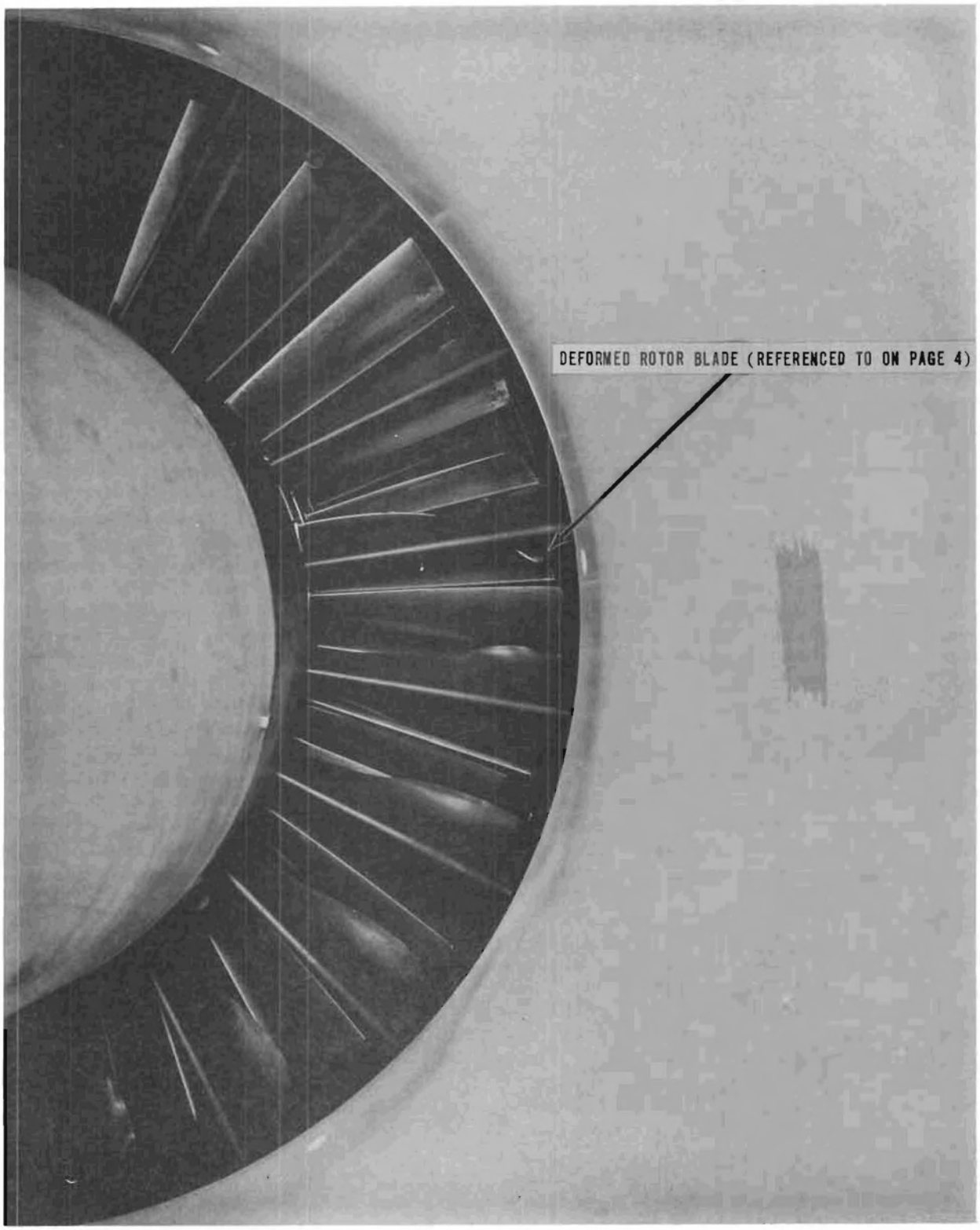

FIG. 6 ENGINE INLET DAMAGE THROUGH TEST No. 6

REFERENCES

Millar, Donald M., Wind Tunnel Tests of Allison Model 501-D13 Turboprop Engine Characteristics During Bird Ingestions, FAA ADS Technical Report No. ADS-2, July 1963.

Millar, Donald M., Tests of Pratt and Whitney Model YTF33-P-1 Turbofan Engine Characteristics During Bird Ingestion, FAA ADS Technical Report No. ADS-30, January 1965.

Seubert, John L., Biological Studies of the Problem of Bird Hazard to Aircraft, FAA SRDS Technical Report No. RD-65-73, June 1965

Gas Turbine Installation Handbook, JT3 Turbojet Engines, Volume I, Pratt and Whitney Aircraft Division of United Aircraft Corporation, May 1956.

ABSTRACT

UNCLASSIFIED

FAA ADS - 58
Federal Aviation Agency

INVESTIGATION OF TURBOJET ENGINE CHARACTERISTICS DURING BIRD INGESTION by Donald M. Millar, Final Report, January 1966. 17 pp., incl. 6 illus. and 3 tables.
(Project 520-004-04X, FAA Technical Report ADS - 58)

Unclassified Report

I. Millar, Donald M.
II. Project No. 520-004-04X
III. Report No. ADS - 58

Descriptors

Propulsion
Turbojet Engines
Jet Engines

Tests were conducted to determine specific reactions to the ingestion of birds by a J57 turbojet engine. Various quantities of birds were propelled into the engine inlet at velocities on the order of 125 knots by compressed air gun devices. The engine was subjected to ingestion of a total of 59 starlings, in densities ranging from three to twenty birds per test, and one sea gull. Transient and steady-state engine performance was monitored and recorded during and following ingestion sequences. An abrupt fluctuation in engine performance was sustained in all tests conducted with subsequent engine recovery and stabilization being attained in approximately two seconds with the exception of one test which

UNCLASSIFIED

(over)

required manual manipulation of engine controls prior to engine recovery. Residual contamination of the engine resulted in some decrease in overall engine efficiency. Damage was incurred by the inlet guide vanes and first stage rotor blades during the course of the program. Although this damage did not impair or prevent continued engine operation, the occurrence of such damage in service would require repair prior to continued flight operation.

UNCLASSIFIED

ABSTRACT

UNCLASSIFIED

FAA ADS - 58
Federal Aviation Agency

INVESTIGATION OF TURBOJET ENGINE CHARACTERISTICS DURING BIRD INGESTION by Donald M. Millar, Final Report, January 1966. 17 pp., incl. 6 illus. and 3 tables.
(Project 520-004-04X, FAA Technical Report ADS - 58)

Unclassified Report

I. Millar, Donald M.
II. Project No. 520-004-04X
III. Report No. ADS - 58

Descriptors

Propulsion
Turbojet Engines
Jet Engines

Tests were conducted to determine specific reactions to the ingestion of birds by a J57 turbojet engine. Various quantities of birds were propelled into the engine inlet at velocities on the order of 125 knots by compressed air gun devices. The engine was subjected to ingestion of a total of 59 starlings, in densities ranging from three to twenty birds per test, and one sea gull. Transient and steady-state engine performance was monitored and recorded during and following ingestion sequences. An abrupt fluctuation in engine performance was sustained in all tests conducted with subsequent engine recovery and stabilization being attained in approximately two seconds with the exception of one test which

UNCLASSIFIED

(over)

required manual manipulation of engine controls prior to engine recovery. Residual contamination of the engine resulted in some decrease in overall engine efficiency. Damage was incurred by the inlet guide vanes and first stage rotor blades during the course of the program. Although this damage did not impair or prevent continued engine operation, the occurrence of such damage in service would require repair prior to continued flight operation.

UNCLASSIFIED

ABSTRACT

UNCLASSIFIED

FAA ADS - 58
Federal Aviation Agency

INVESTIGATION OF TURBOJET ENGINE CHARACTERISTICS DURING BIRD INGESTION by Donald M. Miller, Final Report, January 1966. 17 pp., incl. 6 illus. and 3 tables.
(Project 520-004-04X, FAA Technical Report ADS - 58)

Unclassified Report

I. Miller, Donald M.
II. Project No. 520-004-04X
III. Report No. ADS - 58

Descriptors

Propulsion
Turbojet Engines
Jet Engines

Tests were conducted to determine specific reactions to the ingestion of birds by a J57 turbojet engine. Various quantities of birds were propelled into the engine inlet at velocities on the order of 125 knots by compressed air gun devices. The engine was subjected to ingestion of a total of 59 starlings, in densities ranging from three to twenty birds per test, and one sea gull. Transient and steady-state engine performance was monitored and recorded during and following ingestion sequences. An abrupt fluctuation in engine performance was sustained in all tests conducted with subsequent engine recovery and stabilization being attained in approximately two seconds with the exception of one test which

(over)

UNCLASSIFIED

required manual manipulation of engine controls prior to engine recovery. Residual contamination of the engine resulted in some decrease in overall engine efficiency. Damage was incurred by the inlet guide vanes and first stage rotor blades during the course of the program. Although this damage did not impair or prevent continued engine operation, the occurrence of such damage in service would require repair prior to continued flight operation.

UNCLASSIFIED

ABSTRACT

UNCLASSIFIED

FAA ADS - 58
Federal Aviation Agency

INVESTIGATION OF TURBOJET ENGINE CHARACTERISTICS DURING BIRD INGESTION by Donald M. Miller, Final Report, January 1966. 17 pp., incl. 6 illus. and 3 tables.
(Project 520-004-04X, FAA Technical Report ADS - 58)

Unclassified Report

I. Miller, Donald M.
II. Project No. 520-004-04X
III. Report No. ADS - 58

Descriptors

Propulsion
Turbojet Engines
Jet Engines

Tests were conducted to determine specific reactions to the ingestion of birds by a J57 turbojet engine. Various quantities of birds were propelled into the engine inlet at velocities on the order of 125 knots by compressed air gun devices. The engine was subjected to ingestion of a total of 59 starlings, in densities ranging from three to twenty birds per test, and one sea gull. Transient and steady-state engine performance was monitored and recorded during and following ingestion sequences. An abrupt fluctuation in engine performance was sustained in all tests conducted with subsequent engine recovery and stabilization being attained in approximately two seconds with the exception of one test which

(over)

UNCLASSIFIED

required manual manipulation of engine controls prior to engine recovery. Residual contamination of the engine resulted in some decrease in overall engine efficiency. Damage was incurred by the inlet guide vanes and first stage rotor blades during the course of the program. Although this damage did not impair or prevent continued engine operation, the occurrence of such damage in service would require repair prior to continued flight operation.

UNCLASSIFIED

ABSTRACT

UNCLASSIFIED

FAA ADS - 58
Federal Aviation Agency

INVESTIGATION OF TURBOJET ENGINE CHARACTERISTICS DURING BIRD INGESTION by Donald M. Millar, Final Report, January 1966. 17 pp., incl. 6 illus. and 3 tables.
(Project 520-004-04X, FAA Technical Report ADS - 58)

Unclassified Report

I. Millar, Donald M.
II. Project No. 520-004-04X
III. Report No. ADS - 58

Descriptors

Propulsion
Turbojet Engines
Jet Engines

Tests were conducted to determine specific reactions to the ingestion of birds by a J57 turbojet engine. Various quantities of birds were propelled into the engine inlet at velocities on the order of 125 knots by compressed air gun devices. The engine was subjected to ingestion of a total of 59 sterlings, in densities ranging from three to twenty birds per test, and one sea gull. Transient and steady-state engine performance was monitored and recorded during and following ingestion sequences. An abrupt fluctuation in engine performance was sustained in all tests conducted with subsequent engine recovery and stabilization being attained in approximately two seconds with the exception of one test which

UNCLASSIFIED

(over)

required manual manipulation of engine controls prior to engine recovery. Residual contamination of the engine resulted in some decrease in overall engine efficiency. Damage was incurred by the inlet guide vanes and first stage rotor blades during the course of the program. Although this damage did not impair or prevent continued engine operation, the occurrence of such damage in service would require repair prior to continued flight operation.

UNCLASSIFIED

ABSTRACT

UNCLASSIFIED

FAA ADS - 58
Federal Aviation Agency

INVESTIGATION OF TURBOJET ENGINE CHARACTERISTICS DURING BIRD INGESTION by Donald M. Millar, Final Report, January 1966. 17 pp., incl. 6 illus. and 3 tables.
(Project 520-004-04X, FAA Technical Report ADS - 58)

Unclassified Report

I. Millar, Donald M.
II. Project No. 520-004-04X
III. Report No. ADS - 58

Descriptors

Propulsion
Turbojet Engines
Jet Engines

Tests were conducted to determine specific reactions to the ingestion of birds by a J57 turbojet engine. Various quantities of birds were propelled into the engine inlet at velocities on the order of 125 knots by compressed air gun devices. The engine was subjected to ingestion of a total of 59 starlings, in densities ranging from three to twenty birds per test, and one sea gull. Transient and steady-state engine performance was monitored and recorded during and following ingestion sequences. An abrupt fluctuation in engine performance was sustained in all tests conducted with subsequent engine recovery and stabilization being attained in approximately two seconds with the exception of one test which

UNCLASSIFIED

(over)

required manual manipulation of engine controls prior to engine recovery. Residual contamination of the engine resulted in some decrease in overall engine efficiency. Damage was incurred by the inlet guide vanes and first stage rotor blades during the course of the program. Although this damage did not impair or prevent continued engine operation, the occurrence of such damage in service would require repair prior to continued flight operation.

UNCLASSIFIED

ABSTRACT

UNCLASSIFIED

FAA ADS - 58
Federal Aviation Agency

INVESTIGATION OF TURBOJET ENGINE CHARACTERISTICS DURING BIRD INGESTION by Donald M. Millar, Final Report, January 1966. 17 pp., incl. 6 illus. and 3 tables.
(Project 520-004-04X, FAA Technical Report ADS - 58)

Unclassified Report

I. Millar, Donald M.
II. Project No. 520-004-04X
III. Report No. ADS - 58

Descriptors

Propulsion
Turbojet Engines
Jet Engines

Tests were conducted to determine specific reactions to the ingestion of birds by a J57 turbojet engine. Various quantities of birds were propelled into the engine inlet at velocities on the order of 125 knots by compressed air gun devices. The engine was subjected to ingestion of a total of 59 starlings, in densities ranging from three to twenty birds per test, and one sea gull. Transient and steady-state engine performance was monitored and recorded during and following ingestion sequences. An abrupt fluctuation in engine performance was sustained in all tests conducted with subsequent engine recovery and stabilization being attained in approximately two seconds with the exception of one test which

UNCLASSIFIED

(over)

required manual manipulation of engine controls prior to engine recovery. Residual contamination of the engine resulted in some decrease in overall engine efficiency. Damage was incurred by the inlet guide vanes and first stage rotor blades during the course of the program. Although this damage did not impair or prevent continued engine operation, the occurrence of such damage in service would require repair prior to continued flight operation.

UNCLASSIFIED

ABSTRACT

UNCLASSIFIED

FAA ADS - 58
Federal Aviation Agency

INVESTIGATION OF TURBOJET ENGINE CHARACTERISTICS DURING BIRD INGESTION by Donald M. Millar, Final Report, January 1966. 17 pp., incl. 6 illus. and 3 tables.
(Project 520-004-04X, FAA Technical Report ADS - 58)

Unclassified Report

I. Millar, Donald M.
II. Project No. 520-004-04X
III. Report No. ADS - 58

Descriptors

Propulsion
Turbojet Engines
Jet Engines

Tests were conducted to determine specific reactions to the ingestion of birds by a J57 turbojet engine. Various quantities of birds were propelled into the engine inlet at velocities on the order of 125 knots by compressed air gun devices. The engine was subjected to ingestion of a total of 59 starlings, in densities ranging from three to twenty birds per test, and one sea gull. Transient and steady-state engine performance was monitored and recorded during and following ingestion sequences. An abrupt fluctuation in engine performance was sustained in all tests conducted with subsequent engine recovery and stabilization being attained in approximately two seconds with the exception of one test which

UNCLASSIFIED

(over)

required manual manipulation of engine controls prior to engine recovery. Residual contamination of the engine resulted in some decrease in overall engine efficiency. Damage was incurred by the inlet guide vanes and first stage rotor blades during the course of the program. Although this damage did not impair or prevent continued engine operation, the occurrence of such damage in service would require repair prior to continued flight operation.

UNCLASSIFIED