COPY 1

U.S. Department of Transportation
Federal Aviation Administration

Revised SSRVT Operational Requirements Data

DOT/FAA/AP-85/6

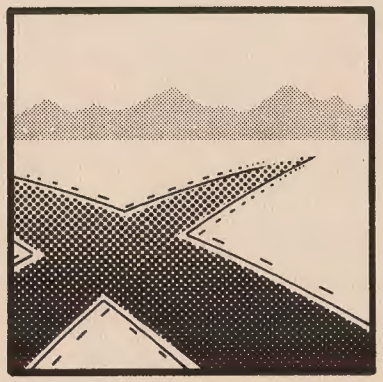

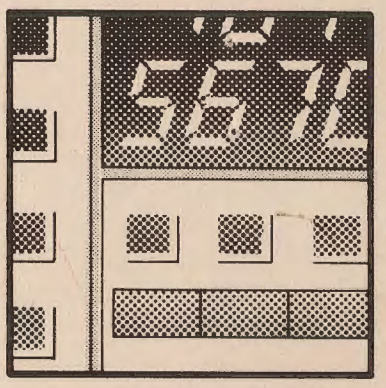

FEDERAL AVIATION ADMINISTRATION
MAY 27 1993
TECHNICAL CENTER LIBRARY
ATLANTIC CITY INT'L AIRPORT, NJ 08405

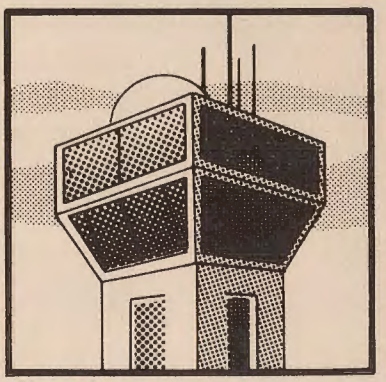

November 1, 1985

335

REVISED SSRVT OPERATIONAL REQUIREMENTS DATA

CONTRACT DTF A01-85-Y-01034
CDRLs B112 and C101

November 1985

Prepared by:
Computer Technology Associates, Inc.
5670 S. Syracuse Circle, Suite 200
Englewood, CO 80111
(303) 889-1200

REVISED SSRVT OPERATIONAL REQUIREMENTS DATA

CONTRACT DTF A01-85-Y-01034
CDRL B112 and C101

November 1985

Prepared by:

H. L. Ammerman
E. S. Becker
L. J. Bergen
D. K. Davies
G. W. Jones
J. M. Julien
J. M Pfeil

M. D. Phillips, Technical Director

Technical Report Documentation Page

1. Report No.	2. Government Accession No.	3. Recipient's Catalog No.
DOT/FAA/AP-85/6	----------	----------

4. Title and Subtitle	5. Report Date
Revised SSRVT Operational Requirements Data	11/1/85
	6. Performing Organization Code: ----------
7. Author(s) Ammerman, H.; Becker, E.; Bergen, L.; Davies, D.; Jones, G.; Julien, J.; Pfeil, J.; Phillips, M.	8. Performing Organization Report No. B112/C101
9. Performing Organization Name and Address: Computer Technology Associates, Inc. 5670 S. Syracuse Circle, Suite 200 Englewood, CO 80111	10. Work Unit No. (TRAIS): ----------
	11. Contract or Grant No. DTF-A01-85-Y-01034
12. Sponsoring Agency Name and Address: FAA/AAP 100 Federal Aviation Administration DOT 800 Independence Ave., S.W. Washington, D.C. 20591	13. Type of Report and Period Covered: Final
	14. Sponsoring Agency Code: ----------

15. Supplementary Notes

---

16. Abstract

"Revised SSRVT Operational Requirements Data" documents the update of the SSRVT Baseline Documentation reflecting the Advanced Automation System (AAS) functionality described in the May 1985 version of the System Level Specification, as modified by the SCN 003 change package (July 1985). The baseline documents are currently comprised of DOT/FAA/AP-84/16 ("Operations Concept") CTA, 30 April 1984; DOT/FAA/AP-84/17 ("Console Requirements"); and DOT/FAA/AP-84/18 ("Functional Capabilities and Performance Requirements"). In addition, the Task-Requirement Traceability Matrices documented herein updates the work currently detailed in CTA CDRL C101 (23 August 1985). Task to System Level Specification (SLS) Traceability provides an important link between the SSRVT requirements and as such enables the Team to be consistant and complete in their evaluations. Also, the trace provides a vehicle for assessing the implications of proposed changes to requirements.

17. Key Words	18. Distribution Statement
Composition Graphs, Task Description Language, Dialogue Description Language, Controller Task Elements, User Interface Language, User Input Language, User Display Language, Controller Task List, Traceability, frequency, priority	----------

19. Security Classif. (of this report)	20. Security Classif. (of this page)	21. No. of Pages	22. Price
Unclassified	Unclassified	-------	--------

Form DOT F 1700.7 (8-72) Reproduction of completed page authorized

FOREWORD

This document updates key portions of the SSRVT Baseline Documentation, which is currently comprised of DOT/FAA/AP-84/16 ("Operations Concept"); DOT/FAA-AP-84/17 ("Console Requirements"); and DOT/FAA/AP-84/18 ("Functional Capabilities and Performance Requirements"). The material presented here reflects the Advanced Automation System (AAS) functionality described in the May 1985 version of the AAS System Level Specification (SLS) (FAA-ER-130-005F), as modified by the SCN 003 change package (July 1985). This document includes both CDRL B112, SSRVT Operational Requirements Data, and CDRL C101, Task - Requirement Traceability.

The information presented in this document was reviewed and validated at the FAA Sector Suite Requirements Validation Team (SSRVT) meeting held during September 6, 1985. The authors wish to express their appreciation to the SSRVT members who reviewed the document and, as always, provided many valuable comments.

SSRVT Members

Ms. Mary Austin
Mr. Richard Banks
Mr. Richard Chavez
Mr. Carlisle Cook
Mr. Don Fowler
Mr. Max Hall
Mr. Thomas Lane
Mr. Martin Lilly
Mr. Marvin Perkins
Mr. Ralph Procaccini
Mr. Terry Schomburg
Mr. Jim Sheely
Mr. John White
Mr. John Williams
Mr. Ian Wolf

They would also like to thank Frank Yohe, AAP-100; Cathy Smith, MITRE; and Allan Cunningham, APM-250; for their review, and L. Lane Speck, ATR-150, SSRVT Chairman; Wilbert Larson, ATR-150; and Andres Zellweger, AAP-100; for their support of the SSRVT activities.

TABLE OF CONTENTS

	Page
Foreword	iii
List of Figures	vii
Section 1.0 INTRODUCTION	1-1
1.1 PURPOSE	1-1
1.2 SCOPE	1-2
1.3 METHODOLOGY	1-2
1.3.1 Assumptions	1-2
1.3.2 Procedure	1-3
1.3.2.1 Derivation of New Controller Tasks	1-3
1.3.2.2 Dialogue Description Language	1-4
1.3.2.3 Controller Task Elements	1-4
1.3.2.4 User Interface Language	1-7
1.3.2.5 Controller Task List	1-8
1.3.2.6 Traceability	1-9
1.4 RESULTS SUMMARY	1-10
Section 2.0 COMPOSITION GRAPHS	2-1
Section 3.0 DIALOGUE DESCRIPTION LANGUAGE	3-1
Section 4.0 CONTROLLER TASK ELEMENTS	4-1
Section 5.0 USER INTERFACE LANGUAGE	5-1
Section 6.0 CONTROLLER TASK LIST	6-1

TABLE OF CONTENTS (Con't)

APPENDICES:

A Controller Task-Requirement Traceability . . A-1

B DDL Development Guidelines B-1

C Task Element Grammar C-1

D Glossary of Controller Task Action Verbs . . D-1

E Relation of ATC Events to Controller Sub-Activities E-1

F Changes to Original Task for Update to May/July 1985 SLS F-1

G Glossary of Terms G-1

H List of Acronyms H-1

I References I-1

LIST OF FIGURES

TITLE		PAGE
Figure 1-1	Example of Rules B and C	1-6
Figure 1-2	Example of Rule D Exception	1-6
Figure 2-1	Composition Graph Symbology	2-1
Figure C-1	Taxonomy of Allowable Action Verbs for Task Elements	C-1

FOR LOAN ONLY

U.S. Department
of Transportation
**Federal Aviation
Administration**

Revised SSRVT Operational Requirements Data

DOT/FAA/AP-85/6

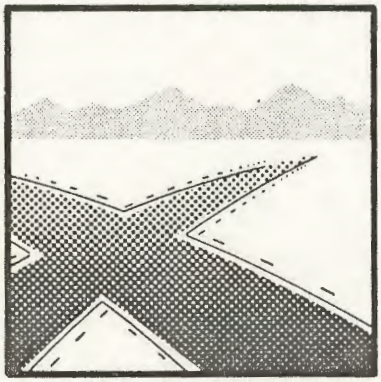

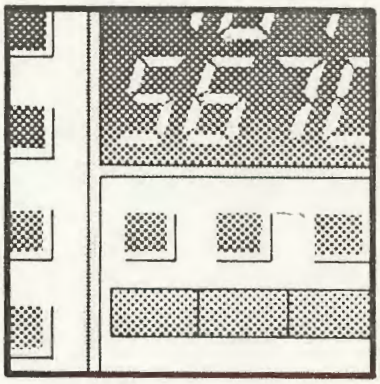

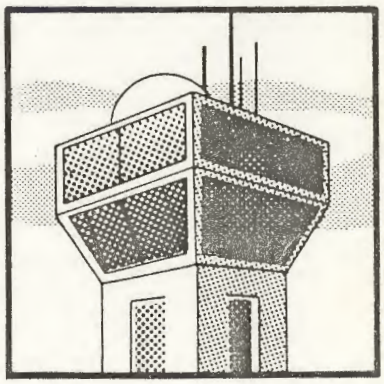

November 1, 1985

86-0406

335

1.0 INTRODUCTION

1.0 INTRODUCTION

1.0 INTRODUCTION

1.1 PURPOSE

The man-machine interface (MMI) operations concept for the ACF Air Traffic Controller has been documented in a series of reports: Operations Concept for the Advanced Automation System Man-Machine Interface, DOT/FAA/AP-84/16 (Ref. 4); Draft Sector Suite Console Requirements Specification, DOT/FAA/AP-84/17 (Ref. 3); and Sector Suite Man-Machine Functional Capabilities and Performance Requirements, DOT/FAA/AP-84/18 (Ref. 5). These documents together comprise the SSRVT Baseline Documentation. These documents, which present and analyze the ACF Domestic Controller's operational tasks, have been augmented by others dealing with the operational tasks of the Oceanic Manual Controller, Area Supervisor, and Area Manager-In-Charge: Operations Concept for AAS MMI: Oceanic and Supervisory Positions (CTA CDRL A017, Ref. 1); and Non-Sector Position MMI Language Requirements (CTA CDRL A028). These documents present, for each of the four ACF operational positions cited, the following:

a. External events which stimulate performance of controller tasks.

b. Controller activities, sub-activities, and tasks performed in response to the external events.

c. Interactions with other key personnel: pilots, other controllers, supervisors, and other internal and external positions and agencies.

d. Information needed by the controller to execute tasks successfully.

e. Tools and capabilities required to enable the controller to perform tasks accurately and rapidly enough to satisfy situation needs.

f. Estimates of position workload under selected operational scenarios.

g. Task elements, including the component actions involved in performing each controller task, information requirements, frequency and priority of performance, and required machine response times. (These data were developed only for the Domestic Controller.)

The purpose of the present document is to update this baseline to reflect the post-SRR Advanced Automation System, System Level Specification (AAS SLS Ref. 7) as modified by the SCN 003 change package (Ref. 8). In addition, this document also reflects new insights gained on the

older work as a result of more recent work, such as additional controller tasks derived by analysis of the Area Supervisor's coordination activities.

The focus of this document is on the domestic controller, as is the case with the existing SSRVT Baseline Documentation. The non-sector positions are not directly addressed here except in the User Interface Language section, where it was possible to include them because of the extensive overlap with domestic controller requirements. Otherwise, the non-sector positions are addressed only as domestic controller interfaces.

1.2 SCOPE

The AAS SLS (Ref. 7) identifies three types of domestic control positions: En Route, Radar Approach Control, and Non-Radar Approach Control. These are not treated separately in this document; the "domestic controller" is considered to represent all of these three types of positions.

A great deal of variation in local procedures exists between one ACF and another. Each ACF faces unique problems due to its particular geographic situation and traffic characteristics, so that a high degree of local autonomy is essential. A high-frequency, high-priority task at one ACF may be much less significant at another. In addition, individual controllers prefer different modes of operation within an ACF. These variations do not significantly affect the task decomposition, since the tasks that must be performed remain the same. The composition graph symbology provides considerable flexibility in documenting tasks. However, applying quantitative criteria such as frequency and priority requires caution. The approach used in this document was to assume a single, typical "generic" sector to encompass the sector and site specific variations in frequency and priority found in many tasks.

1.3 METHODOLOGY

The methodology used in this work follows that used for previous work in this area by Computer Technology Associates, Inc. (CTA). Following is a general summary of the methodology. The reader is referred to References 4 and 5 for a more detailed discussion of this requirements engineering methodology.

1.3.1 Assumptions

The controller tasks documented in this analysis reflect full AAS functionality, including AERA 1 functions. Specifically, it is assumed that:

a. AERA 1 functionality will be available as specified in the May 1985 SLS as modified by the SCN 003 change package (July 1985). The following

functions will be available: flight plan, aircraft, airspace, and flow conflict detection; and priority and advisory alert generation; sector workload prediction; resolution aid; reconformance aid; and trial planning. The VSCS capabilities in SCN 003 will also be available.

b. A nationwide Traffic Management System (TMS), if implemented during the period covered by this document, will enable the ACF to regulate the traffic flow within its own area of responsibility. The Central Flow Control Facility (CFCF), as the national-level TMS node, will have the primary responsibility for coordinating traffic flow between different ACFs. Full implementation of AAS-TMS interface is assumed to occur in AERA 2 or later.

c. The following are key interfaces affecting Sector Suite MMI as they apply to the operational controller positions discussed in this document (this is not a complete list of AAS interfaces):

- Air Traffic Control Command Center (ATCCC)
- Central Weather Processor (CWP)
- Voice Switching and Control System (VSCS)
- National Airspace Data Interchange Network (NADIN)
- Aeronautical Radio, Inc. (ARINC)

d. The Data Link interface will not be available. All pilot - controller coordination will be via VSCS.

e. This document does not directly address the Initial Sector Suite Subsystem (ISSS). However, the ISSS MMI should provide a subset of the AAS capabilities documented here. ISSS-specific tasks have been identified in Section 6.0.

1.3.2 Procedures

1.3.2.1 Derivation of New Controller Tasks

The Composition Graphs/Task Description Language (CG/TDL) present in structured graphical (CG) and textual (TDL) formats the operational tasks performed by the controller in response to the external ATC events. The original CG/TDL set (Ref. 4) was largely based on field interviews with controllers, plus analysis of governing FAA documentation and other applicable literature. That CG/TDL set then was validated by the Sector Suite Requirements Validation Team (SSRVT). For the present update, the principal source of new controller tasks was the

analysis of the SLS and other operational positions. The analysis of the Area Supervisor position (Ref. 1) yielded several coordination tasks for the controller, based upon controller-supervisor interactions documented in Reference 1 but not previously considered in Ref. 4. Some tasks were also derived by analysis of Ref. 6, which incorporates VSCS features not envisioned when the original was prepared. Finally, many new tasks were derived by analysis of the AAS SLS (Ref. 7). The system functionality specified in this document has become more well-defined since the version on which Reference 4 was based. Consequently it is appropriate to analyze the AAS SLS to ensure that all system capabilities currently specified are reflected in the MMI Operations Concept.

1.3.2.2 Dialogue Description Language

The Dialogue Description Language (DDL) is an intermediate step between the task and the task elements. Originally described in Chapter 8 of Reference 4, it provides a rigorous framework for the decomposition of tasks to their consituent elements to ensure consistency of results in the latter, as well as interpretive information for the tasks themselves. The intent is to characterize the controller dialogue, not necessarily to constrain the system design. In addition, a high-level display requirement is determined at the task level for further decompostion to task elements. Guidelines for the development of the DDL are described in Appendix B of this document.

The components of dialogue description, as derived from the aforementioned guidelines, appear as column headings within Section 3.0 and are associated with a numbered Task Statement. Task Type (Entry, Receipt, Analytical, and Verbal Coordination), and Characteristic Action Type (Select, Position, Orient, Path, Quantify, Text Entry, Sketch, and Macro) constrain the choice of verbs in the task elements to a limited, easily understood subset of the taxonomy. The Display Content is that information which is directly viewed or manipulated in the course of task accomplishment. The Support Requirement is an operationally acceptable system response time for the task, determined on its frequency and criticality of performance by a "generic controller", and the nature of the events which invoke the task. Finally, these data are combined into an Enhanced Task Statement, which expands upon the basic Task Statement sufficiently to serve as the starting point for the Task Element development described in Section 4.0.

1.3.2.3 Controller Task Elements

The Controller Task Elements table is an augmented version of Appendix A to Reference 5. The intent is to provide a more detailed breakdown of the component elements of each task, to present those elements in a standardized and structured form, and to compile some information about the relative frequencies of occurance and priorities associated with each element, and specific objects with which the controller deals in

performing each task. This analysis addresses a "generic" sector and "nominal" situations. Specific details, particularly frequency, priority, and in some cases the applicable VSCS Task Element Modules (TEMs), may vary at some facilities.

The product of this analysis consists of the Task Element Table Section 4.0. The table is really a composite of sub-tables, each of which is devoted to the decompostion of a single controller task. The first line of each sub-table is set off by dashed lines, and contains an identifying Task Number and Enhanced Task Statement. Each of these sub-tables is divided by seven common columns of information which are as follows: Element Number, Task Element Statements, Frequency, Priority, Object(s), and Number of Objects.

The Task and Element Numbers imply both an order in which task elements are performed and points at which branching may occur. These numbers adhere to the following rules:

a. The Task Number is that of the Enhanced Task Statement, which is common with the Dialogue Description Language. These numbers are always three digits separated by periods and with a prefix of A1. (Note that "A1" indicates a Domestic Controller Task).

   For example: A1.1.1.1 or A1.4.11.1

b. The first suffix number following the Task Number provides two kinds of information. First, when the number changes between task element statements (TESs) the "AND" condition is implied. Second, when the number does not change between TESs, all TESs with the common suffix are "grouped" for the purposes of an implicit "OR" or "AND/OR" condition (see rule C). This suffix changes, with one exception described in rule D, when an implied "AND" is used and between any implicit "OR" or "AND/OR".

c. A second suffix number, used within "grouped" TESs, indicates the number of TESs in the group and the order in which they are performed. When only one TES comprises the group this second suffix is still used as a "place holder".

   An example of the application of rules b and c is shown in Figure 1-1.

d. The only exception to the above rules is when an "embedded" "OR" condition occurs. In this case the first suffix does not change numerically to associate the pieces of the embedded "OR" with the primary TES.

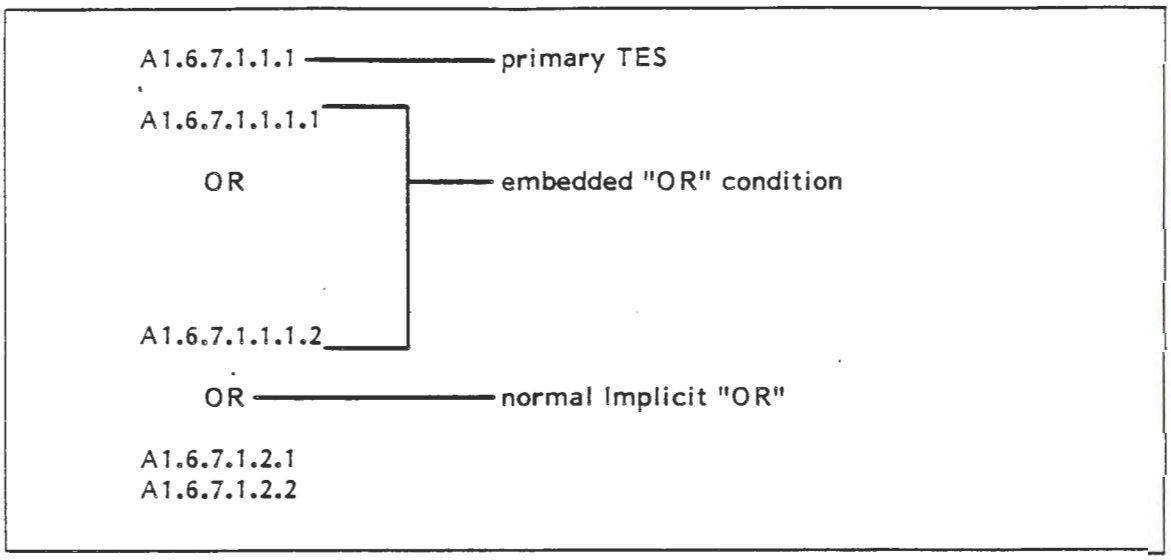

Figure 1-1. Example of Rules B and C

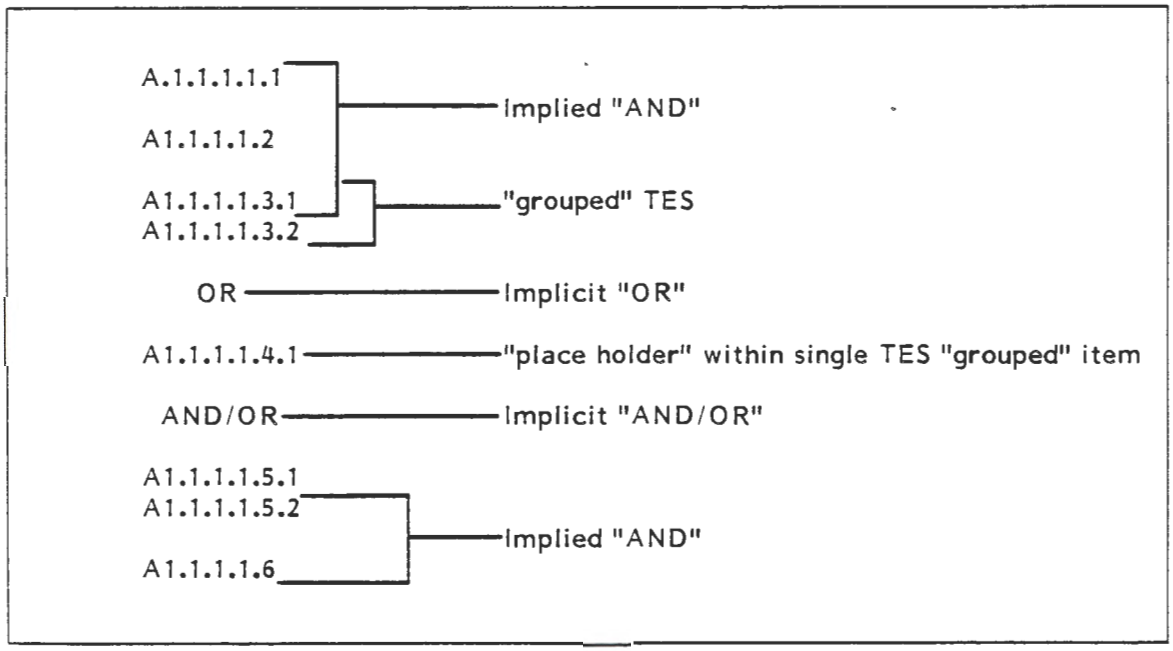

Figure 1-2. Example of Rule D Exception

The example shown in Figure 1-2 illustates this case.

Frequency is measured on a scale of 0 ("almost never") to 9 ("almost continually"). Priority is also measured on a scale of 0 ("of no particular significance") to 9 ("dire consequences if not completed correctly").

VSCS and ATC Mail Task Element Modules (TEMs) have been inserted as appropriate to conserve space, rather than repeat the VSCS and ATC Mail actions at each occurance. The TEMs are defined at the beginning of the main body of the Task Element table.

The Task Element Grammar is a fairly simple grammatical structure and is the standardized manner in which we have chosen to formulate the task elements. It consists of a verb describing the action to be taken, an object naming the entity being acted upon, optional preceding or following modifiers, and an optional descriptive comment phrase (bracketed between two "*....*'s"). Two of these components, the verbs, and the modifiers, along with rules/guidelines for their use are within Appendix C of this document. The objects are those derived for the User Interface Language, described in Section 5 of this document. For the complete hierarchical structure of this taxonomy see Reference 9.

1.3.2.4 User Interface Language Update

The User Interface Language (UIL) is comprised of the User Input Language and User Display Language. The User Input Language refers to data and control messages input by the controller to the system. The User Display Language refers to messages output by the system to the controller in the form of graphical displays, alphanumeric displays and alerts/alarms.

Controller UIL requirements were originally documented in Reference 5. Updated UIL requirements for all positions addressed in this document are presented in Section 5.0.

As with the controller tasks, many new items or expansions of existing items are derived from the AAS SLS (Ref. 7), especially in reference to messages required by the supervisory positions.

UIL items do not exist for their own sake, but support the performance of controller operational tasks. UIL items, therefore, are traced to domestic controller tasks which they support. Further analysis of non-sector position tasks may produce additional UIL requirements.

1.3.2.5 Controller Task List

This table presents each currently identified controller task, the coordination requirements (positions/

agencies involved and media employed), and the AAS transition state(s) applicable to the task.

The following paragraphs explain the data contained in each column of the task list report.

a. Task Number

The first column may contain two different numbers. The first number is the current task number with attached prefix. The number presented below it in parentheses is the baseline number from CDRL A002. The prefixes indicate the general area (operational facility, etc.) and position to which the task pertains. For example, "A" indicates a task with the ACF; "A1" indicates a domestic controller task; while "A2", "A3", etc. will indicate tasks associated with other operational positions.

b. Task Statement

This column contains the Task Statement. It represents the concatenation of the Verb, Object, and Qualifier.

c. Coordination Media

The third column contains the Coordination Media that may be employed for the task. This field is blank if the task does not involve coordination with other operational positions, aircraft or external facilities.

Following are the codes used in this field:

S - Sector Suite (message function and/or ATC Mail as appropriate)
V - VSCS

Person-to-person direct voice coordination is not identified since it does not directly impact the man-machine interface. Person-to-person coordination is always an option if the coordination is between two or more collocated operational personnel. However, it is anticipated that increased emphasis will be placed on maintaining recorded conversations, so that person-to-person coordination will become increasingly infrequent.

d. Coordinating Positions/ Facilities

The fourth column shows which coordinatees may be involved with the task. Coordinatees may include other operational positions in the same facility, such as the Area Supervisor; personnel in other facilities, such as the Air Traffic Control Tower or ARINC; or pilots. Not all coordinatees identified for a task will necessarily be involved in every occurrence of the task. Following are the codes used in this field:

CT - Controller (Domestic and/or Oceanic as appropriate)
AS - Area Supervisor
AM - Area Manager-in-Charge
FS - Flight Service Station
TM - Traffic Management Coordinator
MC - Military Mission Coordinator
SE - Systems Engineer
MT - Meteorologist
PI - Pilot
TW - Air Traffic Control Tower
CF - Central Flow Control Facility
AR - Aeronautical Radio, Inc. (ARINC)
BA - Military Base Operations
OC - Other Coordination

e. Transition State Indicators

The fifth column indicates the level of AAS functionality to which the task applies. Following are the symbols used in this field.

0 - Initial Sector Suite Subsystem (ISSS)
A - Advanced Automation System (AAS)
1 - Advanced Automation System (AAS) AERA 1

f. Revision Date

This field shows the date of the latest revision to any of the data associated with the task. "None" indicates no revision since initial entry - i.e, the item has been unchanged since before 27 June 1985.

1.3.2.6 Traceability

Ideally, each controller task is fully supported by appropriate system functionality prescribed in the SLS (Ref. 1), and each SLS requirement (in the applicable sections of the SLS) responds to a valid controller task. Therefore, traceability between tasks and requirements is essential to ensure tasks and system functionality agree. Appendix A includes matrices tracing from each task to the supporting SLS requirements and vice-versa. "Orphans" (untraced tasks or requirements) are also included. These matrices were developed through a point-by-point analysis of the SLS and Task List (see Section 6.0) to determine the appropriate mappings.

It should be noted that the presence of traceability does not by itself guarantee adequate functionality to support the task (or vice versa). The traceability matrices show the presence or absence of specification consistency. Traceability of tasks to requirements allows a mapping of "what" shall be provided to "why" SLS functions will be used.

1.4 RESULTS SUMMARY

Included in this document are the following:

a. Controller composition graphs, showing controller operational tasks in a logical flow (Section 2.0).

b. Controller Dialogue Description Language, a systematic characterization of the controller tasks which furnishes the starting point for decomposition to the Task Element level (Section 3.0).

c. Controller Task Elements, decomposing the controller tasks to their elemental level and including display requirements, frequency and priority, and operational requirements for system response times (Section 4.0).

d. Controller User Interface Language, including display and input messages in a hierarchical modified Backus-Naur format (Section 5.0).

e. Controller Task List, showing coordination requirements and transition state indicators (Section 6.0).

f. Controller Task - Requirement Traceability, showing which tasks are supported by each applicable portion of the SLS, and which SLS requirement responds to each task. Untraced tasks and requirements ("orphans") are also included Appendix A.

These data reflect the post-SRR program baseline embodied in the May 1985 version of the Advanced Automation System System Level Specification (FAA-ER-130-005F), as subsequently modified by the SCN 003 change package (July 1985). The graphs were reviewed and validated by the FAA Sector Suite Requirements Validation Team (SSRVT) during September of 1985. The graphs in this document reflect the SSRVT comments.

Changes in this version of the SSRVT Baseline material as compared to DOT/FAA/AP-84/16 (Ref. 4) and DOT/FAA/AP-84/18 (Ref. 5) may be summarized as follows:

- Several tasks have been added or changed to reflect the May 1985 AAS SLS (Ref. 7).

- A large number of tasks have been added to reflect SCN 003 (Ref. 8) changes. Nearly all of these reflect AERA 1 functionality, which includes Trial Planning; Flight Plan Priority and Advisory Alerts of aircraft, airspace, and flow conflicts; Reconformance Aid; Resolution Aid; Workload Prediction; and the machine-generated Controller Reminder List.

- Several new tasks have been added based on other analyses. Analysis of other ACF operational positions

documented in CTA CDRL A017 (Ref. 1) revealed certain coordination requirements involving the domestic controller which were not addressed in DOT/FAA/AP-84/16. The VSCS analysis (DOT/FAA/AP-85/3, Ref. 6) also yielded new controller tasks.

- A few obsolete or duplicate tasks have been deleted.

- DOT/FAA/AP-84/16 included a controller activity including all coordination tasks. Activity 7.0, Perform Coordination, has been deleted as a separate activity and its tasks merged with the remaining six activities. This provides a more cogent presentation of controller coordination tasks in the context of other controller tasks to which they are closely related. Task renumbering is cited in Appendix F.

- A new Activity 7.0 is added to incorporate tasks unique to the ISSS environment.

- Coordinating positions are more specifically identified on the composition graphs. See Section 1.3.2.5 for abbreviations used for coordinating positions/agencies and coordination media.

- Because several other ACF operational position analyses have been performed and further similar analyses are expected, it has become necessary to provide a unique identifier for the domestic controller. Therefore, the activity/sub-activity/task numbers have been prefixed with "A1," where "A" indicates an ACF-related operational position analysis, and "1" refers to the domestic controller in the ACF.

- Changes introduced as a result of the July 1985 SSRVT review and validation include certain added tasks, deleted tasks, and logic and wording corrections. Appendix F notes the nature of all task statement and numbering changes, and the SLS or other source of new tasks.

2.0 COMPOSITION GRAPHS/TDL

2.0 COMPOSITION GRAPHS/TDL

SECTION 2.0 COMPOSITION GRAPHS

The Composition Graphs/Task Description Language (CG/TDL), documented within this section, present in structured graphical (CG) and textual (TDL) formats the operational tasks performed by the controller in response to external ATC events. These two components are arranged for easy reference, in that for each CG segment the associated TDL segment appears on the facing page. Note that many of the CG/TDL descriptions are comprised of multiple segments on continuing pages.

- or - - or -	Task to be performed. Broken border indicates a "borrowed" task. Coordination data (where applicable) include coordinating positions/agencies (top) and media available (bottom).
+ +	Conditional - task may or may not be performed.
+ +	Decision point - one task (or path) among several must be chosen.
&	MSE: Perform tasks concurrently as required.
@*	DO WHILE: Perform task(s) repetitively/continuously.
GENERATE CLEARANCE	GENERATE CLEARANCE macro.
TRIAL PLANNING	TRIAL PLANNING macro.
▽ △	Start/end sub-activity.

Figure 2-1. Composition Graph Symbology

A1

DOMESTIC AIR TRAFFIC CONTROLLER

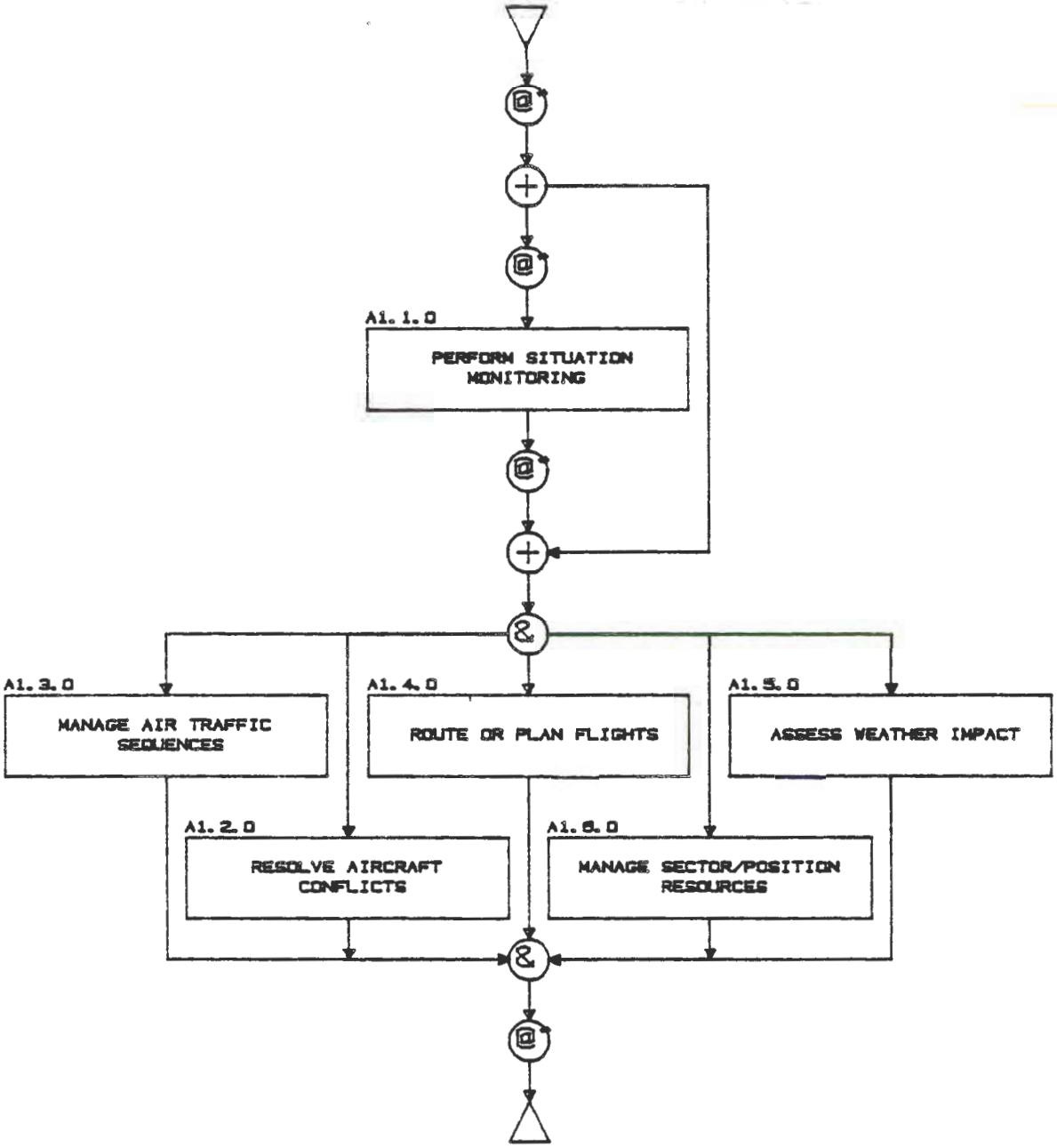

A1. 1. 0
PERFORM SITUATION MONITORING

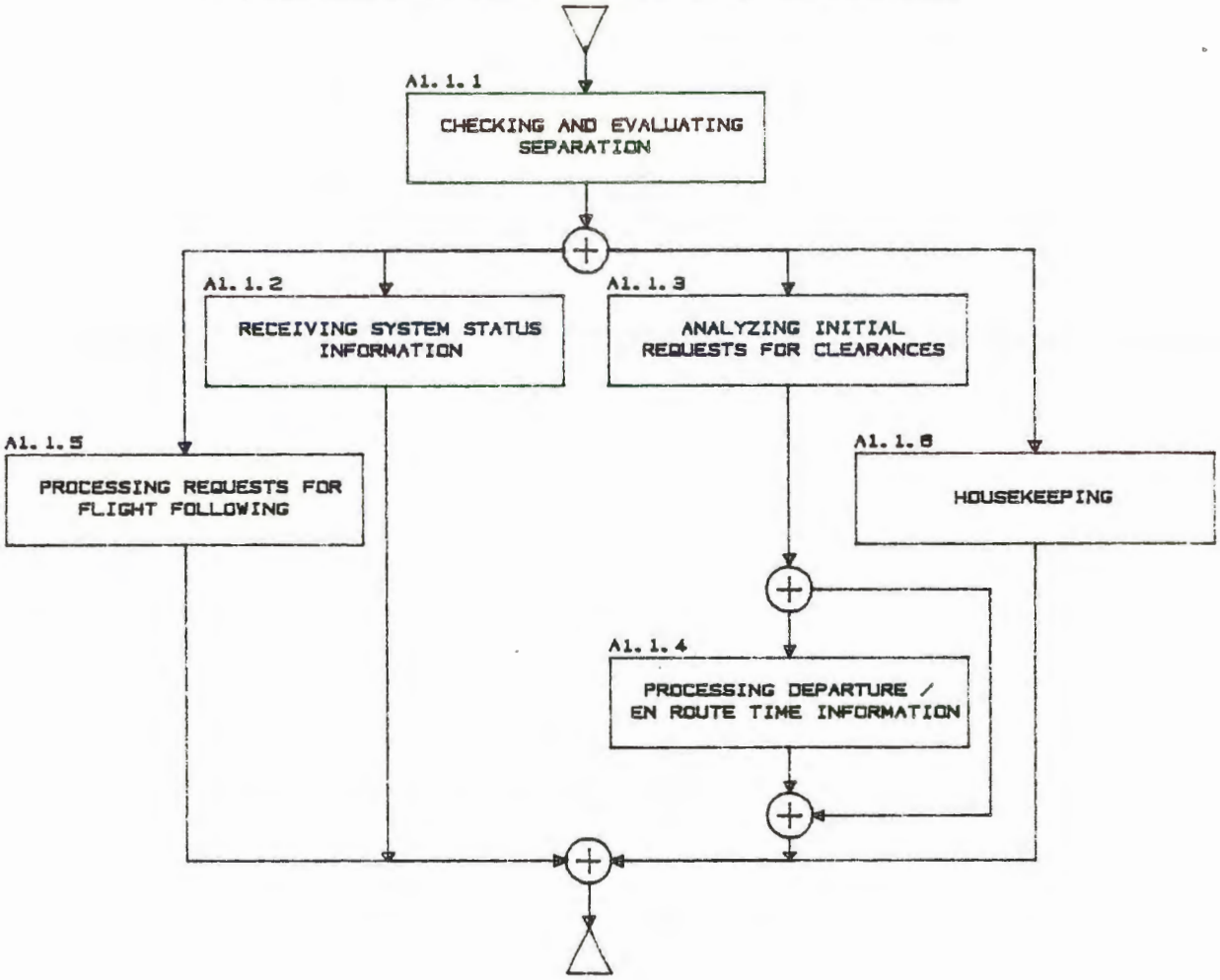

A1. 1. 1

CHECKING AND EVALUATING SEPARATION

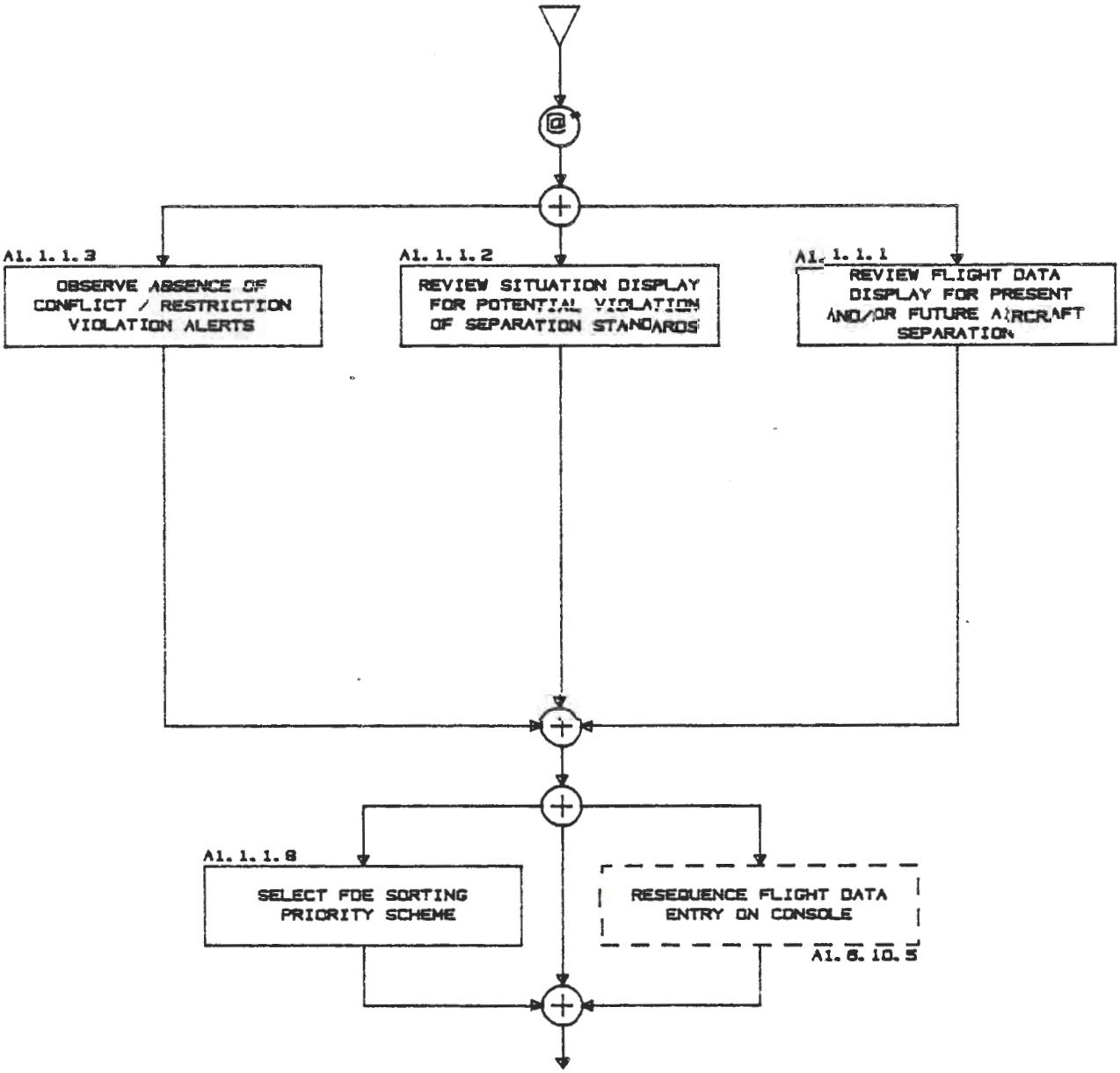

Task Description Language

```
Sub-Activity A1.1.1        CHECKING AND EVALUATING SEPARATION
     INPUT

          FLIGHT DATA DISPLAY VIEW OF AIRCRAFT SEPARATION
          ABSENCE OF CONFLICT / RESTRICTION VIOLATION ALERTS
          SITUATION DISPLAY VIEW OF AIRCRAFT SEPARATION

 DO
    DO WHILE CHECKING AND EVALUATING SEPARATION
       IF NO CONFLICT/ RESTRICTION VIOLATION ALERTS ARE OBSERVED
          THEN
             (A1.1.1.3) OBSERVE ABSENCE OF CONFLICT / RESTRICTION
                        VIOLATION ALERTS
          ELSE
             IF INPUT IS FLIGHT PLAN DISPLAY
                THEN
                   (A1.1.1.1) REVIEW FLIGHT DATA DISPLAY FOR PRESENT
                              AND/OR FUTURE AIRCRAFT SEPARATION
                ELSE
                   (A1.1.1.2) REVIEW SITUATION DISPLAY FOR POTENTIAL
                              VIOLATION OF SEPARATION STANDARDS
             END IF

        END IF

          IF DEEMED NECESSARY BY CONTROLLER
             THEN
                (A1.1.1.8) SELECT FDE SORTING PRIORITY SCHEME
             ELSE
                IF DEEMED NECESSARY BY CONTROLLER
                   THEN
                      (A1.6.10.5) RESEQUENCE FLIGHT DATA ENTRY ON
                                  CONSOLE
                END IF
```

A1.1.1 CHECKING AND EVALUATING SEPARATION (cont.)

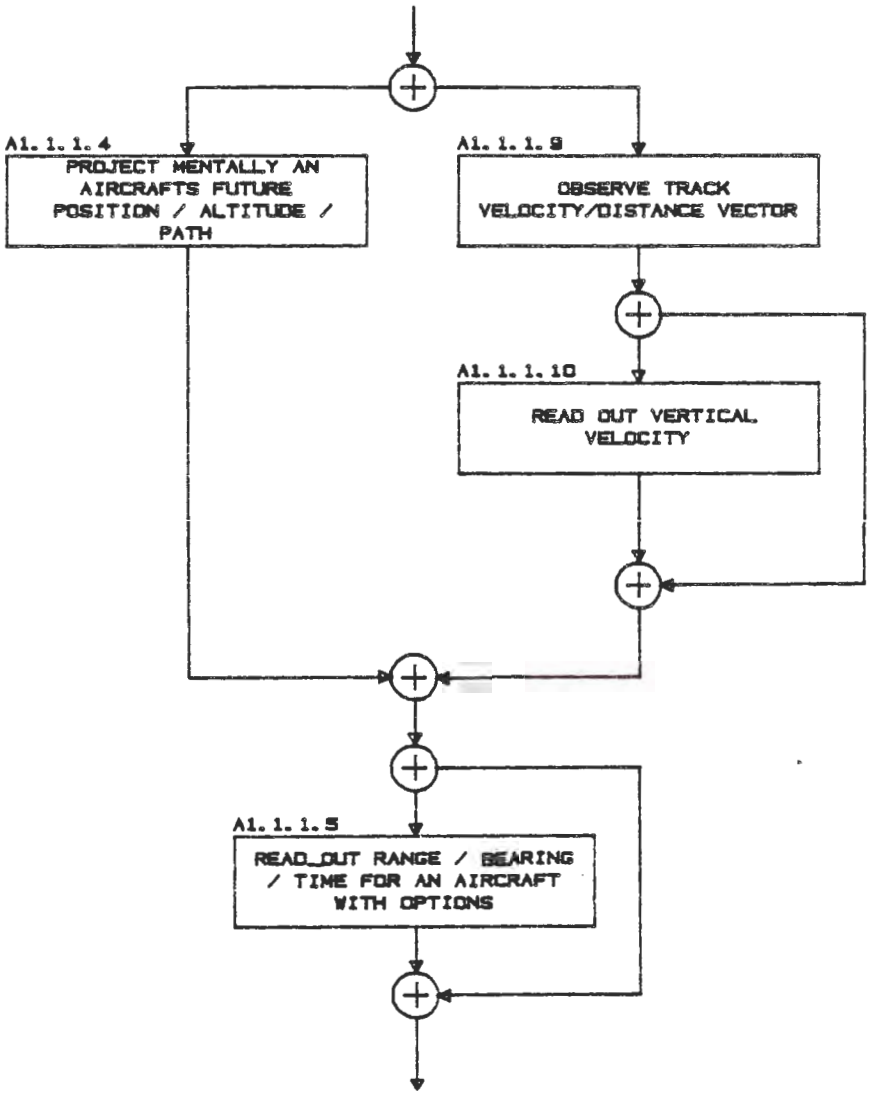

```
END IF

   IF POTENTIAL CONFLICTING TRAFFIC EXISTS
      THEN
         (A1.1.1.4) PROJECT MENTALLY AN AIRCRAFT'S FUTURE
                    POSITION / ALTITUDE / PATH
      ELSE
         (A1.1.1.9) OBSERVE TRACK VELOCITY/DISTANCE VECTOR
         IF DEEMED NECESSARY BY CONTROLLER
            THEN
               (A1.1.1.10) READ OUT VERTICAL VELOCITY
         END IF

   END IF

      IF DEEMED NECESSARY BY CONTROLLER
         THEN
            (A1.1.1.5) READ_OUT RANGE / BEARING / TIME FOR AN
                       AIRCRAFT, WITH OPTIONS
      END IF
```
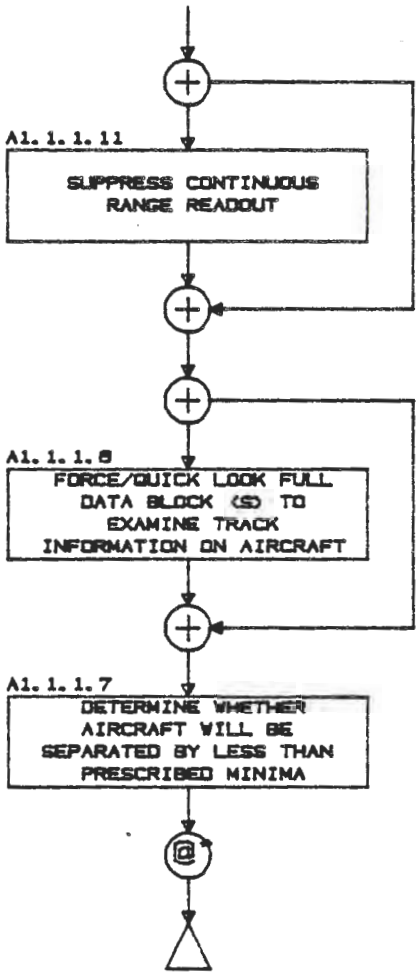
A1.1.1 CHECKING AND EVALUATING SEPARATION (cont.)