DOT/FAA/AR-01/82

Office of Aviation Research
Washington, D.C. 20591

NASA/CR-2002-211437

Langley Research Center
Hampton, VA 23681-2199

A Study of Transport Airplane Crash-Resistant Fuel Systems

March 2002

Final Report

This document is available to the U.S. public through the National Technical Information Service (NTIS), Springfield, Virginia 22161.

U.S. Department of Transportation
Federal Aviation Administration

National Aeronautics and
Space Administration

NOTICE

This document is disseminated under the sponsorship of the U.S. Department of Transportation in the interest of information exchange. The United States Government assumes no liability for the contents or use thereof. The United States Government does not endorse products or manufacturers. Trade or manufacturer's names appear herein solely because they are considered essential to the objective of this report. This document does not constitute FAA certification policy. Consult your local FAA aircraft certification office as to its use.

This report is available at the Federal Aviation Administration William J. Hughes Technical Center's Full-Text Technical Reports page: actlibrary.tc.faa.gov in Adobe Acrobat portable document format (PDF).

Technical Report Documentation Page

1. Report No.	2. Government Accession No.	3. Recipient's Catalog No.
DOT/FAA/AR-01/82 NSA/CR-2002-211437		

4. Title and Subtitle	5. Report Date
A STUDY OF THE TRANSPORT AIRPLANE CRASH-RESISTANT FUEL SYSTEMS	March 2002
	6. Performing Organization Code
7. Author(s)	8. Performing Organization Report No.
S.H Robertson, N.B. Johnson, D.S. Hall and I.J. Rimson	RA-00-305-FAA
9. Performing Organization Name and Address	10. Work Unit No. (TRAIS)
Robertson Aviation, L.L.C. 1024 E. Vista Del Cerro Drive Tempe, AZ 85281	
	11. Contract or Grant No.
	DTFA03-98-C-00016
12. Sponsoring Agency Name and Address	13. Type of Report and Period Covered
U.S. Department of Transportation Federal Aviation Administration Office of Aviation Research Washington, DC 20591 National Aeronautics and Space Administration Washington, DC 20546-0001	Final Report
	14. Sponsoring Agency Code
	ANM-102N

15. Supplementary Notes

The FAA William J. Hughes Technical Center Technical COTR was Mr. Gary Frings. The NASA Langley Research Center Task Monitor was Ms. Lisa Jones.

16. Abstract

This report presents the results of a study, funded by the Federal Aviation Administration (FAA), of transport airplane crash-resistant fuel system (CRFS). The report covers the historical studies related to aircraft crash fires and fuel containment concepts undertaken by the FAA, NASA, and the U.S. Army, which ultimately led to the current state of the art in CRFS technology.

It describes the basic research, testing, field investigations and production efforts which have led to the highly successful military CRFS, which has saved many lives and reduced costs of accidents. Current CRFS technology used in transport category airplanes is defined and compared to the available state-of-the-art technology. The report provides information to the FAA and other government organizations which can help them plan their efforts to improve the state of crash fire protection in the transport airplane fleet.

The report provides guidance to designers looking for information about CRFS design problems, analysis tools to use for product improvement, and a summary of current and proposed regulations for transport category airplane fuel systems.

17. Key Words	18. Distribution Statement
Crashworthiness, Crash-resistant fuel systems, Fuel systems, Postcrash fire, Transport airplane, Investigation, Accident	This document is available to the public through the National Technical Information Service (NTIS) Springfield, Virginia 22161.

19. Security Classif. (of this report)	20. Security Classif. (of this page)	21. No. of Pages	22. Price
Unclassified	Unclassified	240	

Form DOT F1700.7 (8-72) Reproduction of completed page authorized

PREFACE

This research effort and report was prepared by Robertson Aviation, L.L.C. (RA) under Contract No. DTFA03-98-C-00016 with the Federal Aviation Administration William J. Hughes Technical Center, where Mr. Gary Frings served as the Technical Monitor.

The RA Program Manager for this work was S. Harry Robertson. Major research and writing assistance was provided at RA by John R. Rawling and by Crashworthiness Engineers Neva B. Johnson, David Hall, and Ira Rimson. Additional research support at RA was provided by Jeffrey Bracken, William York, David Stover, and by the Aviation Safety Center at Embry-Riddle Aeronautical University in Prescott, Arizona.

Technical assistance was provided by a number of individuals and organizations actively involved in the aviation safety field, including the FAA; the NTSB; the Air Line Pilots Association (ALPA); Simula, Inc.; Dr. Dennis Shanahan; Roy Fox of Bell Helicopter; Dan Sydow of Engineered Fabrics Corporation; Charles H. Delavan, retired fuel system engineer from McDonnell Douglas (now Boeing Company); Brian Carnell, retired crashworthiness engineer from Sikorsky Aircraft; Dennis Whitman, fuel system engineer from WHIT-TEK; Dr. James W. Turnbow, retired engineering professor from Arizona State University and Chief Scientist for the Aviation Safety Engineering Research (AvSER) team of crashworthiness researchers; engineers from the Aeroquip Corporation in Jackson, Michigan, The Aviation Safety Center at Fort Rucker, Alabama, members of the G-9 committee of the SAE, and the Boeing Company in Seattle, Washington, and Mesa, Arizona.

TABLE OF CONTENTS

		Page
EXECUTIVE SUMMARY		xiii
1.	INTRODUCTION	1-1
2.	REVIEW OF POSTCRASH FIRE RESEARCH	2-1
2.1	Background	2-1
2.2	Defining the Postcrash Fire Problem	2-2
2.2.1	Airplane Crash Testing	2-2
2.2.2	Helicopter Crash Testing	2-7
2.2.3	The Postcrash Fire Environment	2-8
2.3	Development of the Crash-Resistant Fuel System (CRFS)	2-11
2.3.1	Early Developments	2-11
2.3.2	Helicopter CRFS Development	2-13
2.3.3	Implementation of CRFS in Helicopters	2-17
2.3.4	Airplane CRFS Development	2-23
2.4	Modified Fuel	2-37
2.4.1	Antimisting Kerosene	2-37
2.4.2	The Controlled Impact Demonstration	2-39
3.	TRANSPORT CATEGORY AIRPLANE CRASH TESTS	3-1
3.1	Test Descriptions	3-1
3.2	Summary of Test Results	3-16
4.	TRANSPORT AIRPLANE ACCIDENT DATA	4-1
4.1	The Piston ERA	4-1
4.2	The Jet ERA	4-1
4.3	Specific Accidents	4-7
5.	CURRENT FUEL SYSTEMS	5-1
5.1	Airframe Design Categories	5-1
5.2	Fuel System Designs	5-1
5.3	Design Considerations	5-16

5.3.1 Wing Tank Disruption 5-16
5.3.2 Center Tank Disruption 5-16
5.3.3 Fuselage Tanks 5-17

6. STATUS OF CURRENT TRANSPORT CRFS TECHNOLOGY AND IMPLEMENTATION 6-1

6.1 Comparison of Military and Civil Crash Environments 6-1
6.2 Crash-Resistant Fuel System Design Issues 6-4
6.3 General System Design Criteria 6-8

6.3.1 Aircraft Performance 6-9
6.3.2 Overall Fuel System Design 6-10
6.3.3 Individual Component Design 6-12
6.3.4 Tanks and Fittings 6-12
6.3.5 Self-Sealing Breakaway Valves 6-15
6.3.6 Fuel Lines 6-19
6.3.7 Vent Valves 6-20
6.3.8 Drain Valves 6-21
6.3.9 Spillage Control Valve 6-22
6.3.10 Nitrogen 6-23
6.3.11 Electrical System 6-24

6.4 Assessment of Current Status of CRFS Design 6-24

7. FUEL SYSTEM CRASH SURVIVABILITY EVALUATION 7-1

7.1 Postcrash Fire Potential Rating System 7-1

7.1.1 Spillage Control 7-2
7.1.2 Ignition Control 7-5

7.2 Fuel System Fire Hazard Level Reduction 7-7

7.2.1 Evaluation Criteria and Process 7-7
7.2.2 Example Fuel System Fire Hazard Level Evaluation 7-14

8. REGULATORY ISSUES 8-1

8.1 Introduction 8-1
8.2 Existing 14 CFR Part 25 Coverage 8-1

8.2.1 Subpart C–Structure—Emergency Landing Conditions 8-1
8.2.2 Other FAR Part 25 Sections 8-2
8.2.3 Subpart F – Equipment 8-9

8.3 Other FAA and Department of Transportation (DOT) Guidance Material 8-10

8.3.1 Advisory Circular 25.994-1: Design Considerations to Protect Fuel Systems During a Wheels Up Landing 8-10

8.3.2 Advisory Circular 25.963-1: Fuel Tank Access Covers 8-13

8.3.3 Advisory Circular 25-8: Auxiliary Fuel System Installations 8-14

8.3.4 New FAA Advisory Circulars Pertaining to Transport Airplane Certification: The Mega-ACs 8-14

8.4 Prior Government Initiatives Toward Improving CRFS and Mitigating Postcrash Fires in Part 25 Airplanes 8-24

8.4.1 U.S. Department of Transportation Report to Congress: Systems and Techniques for Reducing the Incidence of Postcrash Fuel System Fires and Explosions 8-24

8.4.2 Advanced Notice of Proposed Rulemaking (ANPRM) 84-17 8-25

8.4.3 Aviation Safety Research Act of 1988 (PL 100-591) 8-25

8.4.4 Advanced Notice of Proposed Rulemaking (ANPRM) 89-11 8-25

8.5 Industry and Military Publications, Standards, and Specifications 8-26

8.5.1 MIL-STD-1290 (Series): Light Fixed- and Rotary-Wing Aircraft Crash Resistance 8-26

8.5.2 ADS-11 (Series): Survivability Program, Rotary Wing 8-27

8.5.3 ADS-36: Rotary Wing Aircraft Crash Resistance 8-28

8.5.4 Aircraft Crash Survival Design Guide (TR-89-D-22E) 8-29

8.5.5 Military Specifications (MIL-SPECs) 8-29

8.5.6 MIL-STD-882D, Dated 10 Feb 2000: Standard Practice for System Safety 8-30

9. CONCLUSIONS 9-1

10. RECOMMENDATIONS 10-1

11. REFERENCES 11-1

12. BIBLIOGRAPHY 12-1

APPENDICES

A—Technical Data Sheet for the Self-Sealing Breakaway Valve Used in the DC-9 Airliner Auxiliary Fuel System Fuel Lines-Issued 1967

B—Unissued Rough Draft of the FAA Prepared NPRM 89-11A

C—Fuel System Design Checklist

LIST OF FIGURES

Figure		Page
2-1	Abbreviated History of Aircraft Fire Research	2-3
2-2	Plan View of Test Site for DC-7 and Constellation Crash Tests	2-5
2-3	Visible Fuel Spillage Occurring 2.24 Seconds After Constellation Impact With Main Gear Barriers	2-6
2-4	Test Configuration and Sensor Locations (by Station Number) for FAA Burn Test	2-10
2-5	UH-1A Crash-Resistant Fuel System	2-16
2-6	Resistance to Tear for Tank Materials	2-18
2-7	UH-1D/H Crash-Resistant Fuel System	2-20
2-8	Full-Scale Crash Test Method	2-26
2-9	Self-Sealing Breakaway Valve Installation (Wing Root)	2-27
2-10	Accident Events Which Lead to a Fire Hazard	2-33
2-11	Bladder Cell Installation Wide-Body Transport Airplane	2-34
2-12	Fuselage Fuel Tank General Arrangement and Attachment	2-35
2-13	Suggested Velocity Envelope for Structural Integrity Based on Preliminary KRASH Studies	2-36
3-1	Posttest, Frontal View of Transport Section Forward of Wing	3-2

3-2	Transport Center Section Suspended in Vertical Test Apparatus	3-3
3-3	Deformation of B-707 Forward Fuselage Section Following Drop Test	3-4
3-4	Acceleration Time Histories of B-707 Fuselage Section Drop Tests	3-5
3-5	Wide-Body Frame Section Test Results	3-6
3-6	Drop Test Setup for Metro III Fuselage	3-7
3-7	Drop Test Configuration for a B-707 Frame Section With Auxiliary Fuel Tank	3-8
3-8	B-707 Test Section—Side View	3-9
3-9	Front View of Test Section and Fuel Tanks After Impact	3-10
3-10	Airframe Test Section With Auxiliary Fuel Tank Installed	3-11
3-11	Drop Test Setup for Shorts 3-30 Airplane	3-12
3-12	Shorts 3-30 Fuel System	3-12
3-13	Pretest View of a B-737 Fuselage Section With Underfloor Auxiliary Fuel Tank	3-13
3-14	Posttest View of a B-737 Fuselage Section	3-14
3-15	Buckled Fuselage Frame Forward of Auxiliary Fuel Tank	3-14
3-16	Fuselage Underfloor Structure and Auxiliary Fuel Tank	3-15
5-1	Wing Tank in Root Area	5-4
5-2	Wing Tanks Cut Open	5-4
5-3	Wing Tank Cut Open	5-5
5-4	Center Section Fuel Tank With Cabin Floor Above—Rear View	5-5
5-5	Center Section and Wing Root Tanks—Front View	5-6
5-6	Wing Root With Openings to Center Section Bladder Tanks	5-6
5-7	Inside Center Section Bladder Tank	5-7
5-8	Cut Open Center Section Bladder Tank Showing Support Lacing	5-7
5-9	Fuselage Fuel Tanks Over Passenger Compartment After Drop Test	5-8
5-10	Bottom View of Fuselage Tank (From Figure 5-9) Showing Four Fuel Fittings Torn From Tank	5-8

5-11	Auxiliary Fuel Tank in Baggage Area Under Cabin Floor Prior to Drop Test	5-9
5-12	Shrouded Fuel Lines From Under Cabin Floor Into Aft Fuselage	5-10
5-13	Pocket Into Forward Wall of Wing Tank to Allow Leading-Edge Device Retraction	5-12
5-14	Leading-Edge Device Retracting Into Pocket in Wing Fuel Tank	5-12
5-15	Electrical and Pressure Lines for Fuel Pump Inside Tank Wall	5-13
5-16	Outside Fuel Tank Wall From Figure 5-15 Showing Electrical Connection and Pressure Transducer	5-14
5-17	Fuel Pump and Wiring Inside Wing Root Tank	5-14
5-18	Access From Wing Lower Surface to Fuel Pump Cavity	5-15
5-19	Wing Lower Surface With Pump Openings and Access Openings	5-15
5-20	Fuel Quantity Sensor and Wiring Inside Wing Fuel Tank	5-15
6-1	Percentage of All Large Transport Aircraft Crashes That are Survivable, Partially Survivable, and Nonsurvivable	6-2
6-2	Severity Scale of All Large Transport Aircraft Crashes	6-2
6-3	Vertical Velocity Changes for Survivable Accidents in Small Aircraft	6-5
6-4	Occupiable Area Size and Location Relative to the Center of Gravity in Large and Small Aircraft	6-6
6-5	Example of Survivability Chain for an Accident Scenario	6-7
6-6	Frangible Type Self-Sealing Breakaway Valve Installed as a Tank Outlet	6-15
6-7	Frangible Type Self-Sealing Breakaway Valve, as Used in the Fuel Line of Some Current Large Transport Aircraft Auxiliary Fuel Systems	6-16
6-8	Quick Disconnect Valve Installed to Operate as a Self-Sealing Breakaway Valve	6-16
6-9	Cable Lanyard Used to Transmit the Load Required to Cause Separation and Closure of a Typical Self-Sealing Breakaway Valve	6-17
6-10	Cable Lanyard Used to Transmit Load to Pull Release Ring That Uncouples Quick-Disconnect Valve	6-17
6-11	Self-Sealing Breakaway Valve Used as a Tank-to-Tank Interconnect	6-18

6-12 Rollover Vent Valve Passes Air but Closes in any Attitude When Fuel Tries to Escape 6-21

6-13 Sump Drain Valve Designed to Resist Opening or Damage During Crash Impact 6-22

6-14 Spillage Control Valve Designed to Stop Fuel Flow if Engine Quits or if Downstream Fuel Lines Separate 6-22

7-1 Hypothetical Transport Airplane Fuel System With the Components and Hazardous Areas Identified 7-9

LIST OF TABLES

Table		Page
2-1	Summary of AvSER Test Results—Full-Scale Crash Tests	2-14
2-2	CRFS Fuel Cell Material Comparison	2-22
2-3	Crash Test Data	2-28
2-4	Transport Aircraft Candidate Scenarios	2-31
3-1	Summary of Airplane Fuselage Impact Tests	3-17
4-1	Selected Accidents With Fire, Showing Impact and Fire Deaths	4-5
5-1	Current Aircraft	5-2
6-1	Large Transport Aircraft CRFS Components	6-25
6-2	Factors Affecting Large Transport Aircraft CRFS Design	6-26
7-1	Aircraft Survivability Hazard Rating for Helicopters and Small Airplanes	7-2
7-2	Postcrash Fire Potential Rating for Helicopters and Light Airplanes	7-3
7-3	Sample Hypothetical Fuel System Fire Hazard Level—Unmodified Original	7-10
7-4	Sample Hypothetical Fuel System Fire Hazard Level—Modified	7-15

EXECUTIVE SUMMARY

This report presents the results of a study, funded by the Federal Aviation Administration (FAA), of crash-resistant fuel system (CRFS) technology for large transport category airplanes. Research efforts over the years led to the development and installation of CRFSs in all U.S. Army helicopters, resulting in the virtual elimination of postcrash fire fatalities in Army helicopter accidents. The transference of this technology to civil aircraft has been very slow. Although the level of fuel system crash resistance in civil helicopters has been improved during recent years, very little has been done for fixed-wing aircraft of any size. The focus of this study is to assess the status of CRFS technology in current large transport category airplanes and to provide recommendations for the integration of available state-of-the-art CRFS technology into those airplanes.

Efforts to understand the postcrash fire problem of large airplanes and to improve the crash resistance of their fuel systems began over 50 years ago with research and test efforts conducted by the National Advisory Committee for Aeronautics (NACA) National Aeronautical and Space Administration (NASA) and Civil Aviation Authority (CAA) FAA. The U.S. Army began its efforts to develop CRFSs for its helicopters and small fixed-wing aircraft 40 years ago and began installing them in production helicopters 10 years later. These efforts are summarized in some detail to provide the reader with a firm background in the principles of CRFS design as well as in the technology which was developed.

The transference of the CRFS technology to large transport category airplanes is not simple. The fuel systems of current large transport airplanes are much more complex and varied than those in the small fixed-wing and helicopter structures. The vast difference in size poses a problem in establishing simple design criteria for a generic CRFS for large transport airplanes. Whereas the structure and all the occupants of smaller aircraft experience roughly the same crash environment, this is not the case in the larger transport airplanes. These are significant differences in the structural damage suffered, and in the resultant crash loads transmitted to the occupants, in various parts of these large aircraft. As a result, the diversity of the crash environment in which a CRFS must function successfully is extensive. For this reason, CRFS design criteria might better be established based upon anticipated structural displacement coupled with anticipated crash loads, based on typical crash scenarios as determined by detailed crash investigations and test programs, rather than crash loads alone. In any case, what little crash testing has been done on large transport airplanes clearly shows that the crash G loads specified by current regulations are not adequate. The testing also shows that current large transport fuselage auxiliary fuel tanks cannot withstand survivable crash scenarios without leaking.

A review of the available accident data is of little help in establishing the level of current fuel system crash performance. Although the occurrence of fire is reported in the accident reports, the number of fatalities caused by the fire, as opposed to impact, is often not available or is unreliable. The effect of the crash on the fuel system and its components is not reported. Similarly, the reports on structural damage are inadequate to establish crash vectors, crash forces, structural displacements, and other necessary structural behavior patterns. The inadequacy of current available crash data underscores the need for the training of field investigators in specific crashworthiness technology and data collection.

CRFS design principles and technology are described and discussed together with the status of CRFS technology implementation in current large transport airplanes. Some CRFS components and subsystems could be integrated immediately with minimal impact on design. However, there are many areas of CRFS design that require more research before they can be implemented in large transport airplanes. False information, not critically challenged, has retarded the development of some easily accomplished CRFS improvements.

Current and proposed regulations applicable to large transport fuel systems are summarized and analyzed with respect to CRFS designs. The impact of the new "Mega-AC" system is discussed.

This report provides information to the FAA and other governmental organizations that can assist their efforts to improve the crash resistance of large transport category airplane fuel systems.

1. INTRODUCTION.

Postcrash fires account for a high percentage of injuries and fatalities in aircraft accidents that would, in the absence of such fires, be survivable. The successful development and implementation of crash-resistant fuel systems by the U.S. Army in its rotorcraft fleet has proven that technology is available to virtually eliminate fire fatalities in otherwise survivable helicopter accidents. The transference of this technology to civil aircraft has been slow in the several decades since the Army implemented this technology. Although the level of crash resistance in some civil helicopters has been improved over the years, progress has been uneven. Very little has been done for fixed-wing aircraft of any size.

Efforts to understand the postcrash fire problem of large airplanes and to improve the crash resistance of their fuel systems began over 50 years ago with research and test efforts conducted by the National Advisory Committee for Aeronautics (NACA), National Aeronautical and Space Administration (NASA), Civil Aviation Authority (CAA), and Federal Aviation Administration (FAA). The FAA has been active in this effort ever since and, in 1989, issued an Advanced Notice of Proposed Rulemaking (ANPRM 89-11) to determine the feasibility of installing, in all air carrier aircraft, crashworthy fuselage fuel tanks and fuselage fuel lines which are rupture resistant and which disconnect and seal in the event of an accident. Although no further rulemaking has been proposed, the FAA is still desirous of improving the crash resistance of transport airplane fuel systems and would like to issue a new NPRM to implement available crashworthy technology into current versions of transport category airplanes.

To support this effort, the FAA contracted with Robertson Aviation to assess the current crash-resistant fuel system (CRFS) technology applicable to Title 14 Code of Federal Regulations (CFR) Part 25 transport category airplanes and, based on this assessment, to recommend future testing and changes necessary to implement CRFS technology into transport airplanes. The scope of this program included the review and evaluation of (1) prior historical studies in aircraft fire research, (2) design and test efforts associated with CRFS components and fuel containment concepts, (3) available crash test data for transport category aircraft, and (4) pertinent transport airplane crash reports and data. Fuel system designs and CRFS technology currently used in transport airplanes were to be documented and their probable behavior in typical survivable accidents analyzed. Current CRFS technology was to be compared with available state-of-the-art fuel system technology and recommendations made for the integration of CRFS technology into current transport airplane designs. Recommendations also were to be proposed for future testing that would provide sufficient data for the issuance of a new NPRM.

This report begins in section 2 with a summary and analysis of the history of CRFS development, including work done by NASA, the FAA, and the U.S. Army. The implementation of CRFS technology into military and civil rotorcraft and the ongoing efforts to improve the crash fire safety of fixed-wing aircraft are discussed.

Section 3 reviews and analyzes the available data from crash tests of modern transport airplanes for its applicability to CRFS design. Additional testing under varying conditions is identified.

Transport airplane accident data studies are reviewed in section 4. Emphasis is on those of the jet transport era, and a number of special studies and reports from committees established for this

purpose are summarized. Some significant accidents during the recent past are reviewed. The roles that accident data and its collection play in CRFS development also are discussed, including the inadequacy of current available data.

Section 5 reviews the general design of transport aircraft fuel systems, with descriptive examples. There is an incredibly wide variety of designs. Many new aircraft are entering the market with new features, like fuel in the horizontal tail section, that make the overall design problem much more difficult than in helicopters.

Current CRFS design principles and technology are described and discussed in section 6, along with the status of CRFS technology implementation in current transport airplanes. A matrix illustrating current fuel systems used in transport category airplanes versus available state-of-the-art CRFS technology is provided. This matrix highlights those areas most in need of improvement.

CRFS evaluation methods are contained in section 7. A rating system is described to evaluate the postcrash fire potential of a fuel system. Although developed for small fixed-wing and helicopter fuel systems, this rating system, when suitably modified, would be very valuable in assisting the designer of a transport airplane CRFS. The section also contains an evaluation technique that can determine the relative "fire hazard level" for each fuel system component and/or hazardous area. This technique allows the designer to make optimum selection of designs and components.

Section 8 summarizes and analyzes civil and military standards applicable to CRFS for transport category airplanes. The impact of the new "Mega-AC" system is discussed.

Conclusions of the study are presented in section 9.

Recommendations resulting from the study are presented in section 10.

References used in the study are presented in section 11.

A bibliography of related literature is presented in section 12.

2. REVIEW OF POSTCRASH FIRE RESEARCH.

2.1 BACKGROUND.

Early efforts of the CAA (FAA) to combat aviation fires involved efforts to reduce in-flight engine fires. With the advent of turbine engines and pod-mounts below the wing, in-flight fire risk declined. This led to a switch in emphasis to postcrash fires, although some work continued on flight fire hazards [1]. The postcrash fire effort was precipitated by statistical studies of airplane accidents which showed that those accidents with postcrash fires had a much higher fatality rate than those without fires. For instance, the 1946 statistics on U.S. air carrier accidents showed that fire followed 13 percent of all accidents and that approximately 30 percent of the passengers involved in those accidents were killed as a result of the fire. Two to three times as many people were being killed in fire accidents as in non-fire accidents [2].

At the Aircraft Fire Protection Conference in June 1946, the CAA's Technical Development Center proposed two test programs to determine the causes of failure of existing fuel tanks subjected to crash loads [3]. One program, which involved impact and deceleration testing of existing wing fuel tank structures, was funded and the initial test program was completed in 1950. Additional programs followed, including a series of full-scale aircraft crash tests conducted by NACA (NASA) to better define the postcrash fire problem and develop methods of reducing or eliminating these fires.

The increasing use of rotary-wing aircraft in military and civilian operations prompted similar studies to determine the hazard of postcrash fires in accidents with helicopters. A 1961 study of major accidents involving both civilian and military helicopters showed that, although only 8.7 percent of the accidents resulted in fire, 60.4 percent of all the fatalities occurred in those fire accidents [4]. Similar results were found in an analysis of U.S. Army helicopter accidents from July 1957 to June 1960. Seven percent of the 579 accidents examined resulted in postcrash fires, but 63 percent of the fatalities occurred in those postcrash fire accidents [5]. The study also found that 78.5 percent of the postcrash fires could be attributed to ruptured fuel cells and/or fuel lines.

In September 1959, the U.S. Army Transportation Command funded a 1-year contract with the Flight Safety Foundation to conduct research generally in fields related to Army Aviation Safety, with particular reference to crash injury and crashworthiness programs. The work was to be conducted largely by Aviation Crash Injury Research (AvCIR), a division of the Foundation in Phoenix, Arizona. Thus began a collaboration that was to continue for over 10 years and would result, among other crashworthy improvements, in the development, design, and installation of crash-resistant fuel systems in the entire fleet of U.S. Army helicopters.

Concurrent with the development effort for helicopter CRFS by AvCIR and the U.S. Army, the FAA was continuing research into the crash resistance of transport aircraft fuel systems. In the 1970s, a 10-year program was begun, in cooperation with NASA, to improve the crashworthiness of general aviation aircraft. Following this effort, the FAA again turned its attention to improving the crash resistance of transport airplane fuel systems – an effort that continues to this day.

The history of this overall fire research effort, which has spanned more than 50 years, is summarized in some detail in the remainder of this section. The abbreviated history outlined in figure 2-1 may assist the reader in relating the various projects to time and to each other.

2.2 DEFINING THE POSTCRASH FIRE PROBLEM.

2.2.1 Airplane Crash Testing.

Studies to define the causes of aircraft postcrash fires and the specific hazards such fires pose to the occupants began in 1924 during crash tests of United States Army DH-4 aircraft used to carry mail. By removing ignition sources from areas of anticipated fuel spillage, crash fires were prevented. While these and other efforts, such as the selective placement of fuel tanks, offered some help in reducing the postcrash fire problem, the first major scientific effort to address the problem in detail began in the late 1940s with several test programs conducted by the CAA and NACA in conjunction with the U.S. Air Force.

NACA proposed in 1948 that full-scale crash tests be conducted to determine if the use of low-volatility fuel offers significant safety benefits over gasoline and to obtain further information on the origin and propagation of fire during crashes [2]. Subsequently a series of 17 full-scale crash tests was conducted using low-wing (C-46) and high-wing (C-82) twin-engine cargo transport airplanes [6]. All the airplanes had reciprocating engines and most tests used gasoline but some used low-volatility fuel. The tests were structured to simulate a takeoff accident in which the plane fails to become airborne. The airplanes were accelerated along a guide rail under their own power, and then released just before impacting an earthen barrier, which tore off the landing gear and displaced the engines and nacelles. The airplanes then struck embedded poles designed to rupture the wing fuel tanks and the airplanes slid along the ground until they stopped. Impact speeds were 80 to 105 mph.

These pioneering tests showed that fuel spilled in liquid form from broken fuel lines and tanks formed a fuel mist around the plane while the plane was in motion. Depending on the nature of the aircraft deceleration phase, the fuel mist could be projected ahead of the slowing aircraft, it could surround the slowing aircraft, or the fuel mist could trail behind. Fuel spillage from the leading edge of the wing could attain appreciable spanwise spread as a mist forward of the leading edge. A spilled mist fuel usually surrounded the aircraft wreckage after it came to rest. The mist generally dissipated within 2 to 17 seconds after the plane stopped, depending on wind speed. Ignition of the mist occurred in as little as 0.6 second after impact. Flames spread rapidly through the mist (as fast as 45 ft/sec) as the flame front velocity was accelerated by the expanding burning mass of fuel and air. The tests also showed that the use of low-volatility fuel did not prevent ignition or fire.

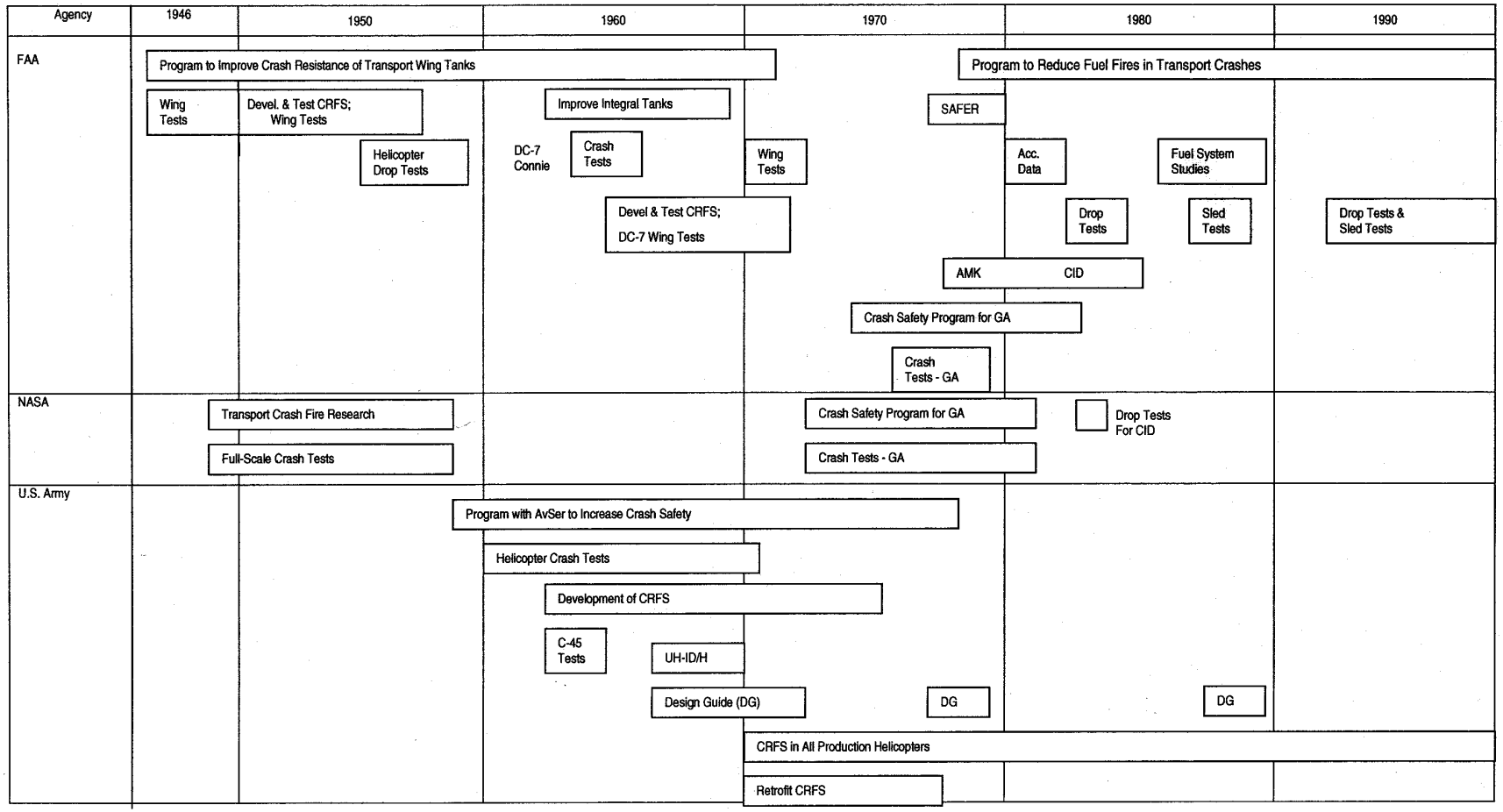

FIGURE 2-1. ABBREVIATED HISTORY OF AIRCRAFT FIRE RESEARCH

Ignition sources determined during the tests were:

a. hot surfaces (e.g., exhaust system, heat exchangers, etc.)
b. friction sparks from abraded airplane metals
c. engine - exhaust flames
d. engine induction system flames
e. electric arcs, electrically heated wiring, and lamp filaments
f. flames from burning hydraulic fluid, engine oil, and alcohol
g. electrostatic sparks

The work on the origin of crash fires was extended to jet aircraft soon thereafter. The ignition hazards of electrical and friction sparks and air heaters were the same as for piston aircraft. New elements were the jet engines and jet fuels. This effort began with two full-scale crash tests; one utilizing a C-82 with pylon-mounted jet engines underneath the wings and one using an F-84 with its jet engine located within the fuselage [7]. Test conditions were similar to those described above. Both crashes resulted in fires when fuel mist ingested into the engines produced flames at the engine inlet and tailpipe, igniting misted fuel spilled from the wings. The fuel was ignited inside the engine by combustion flame or hot-metal surfaces.

A crash fire protection system was designed that disconnected the electrical system, closed the fuel shutoff valve, and sprayed water on hot engine parts. All were activated by a crash-activated switch. There were no fires with this system installed during six full-scale crash tests.

NACA had also advocated in 1948 that efforts be continued on fuel system configurations and construction methods to contain fuel during a crash. An extensive test series was being conducted at this time by the CAA to determine the effectiveness of fixed-wing integral tanks and conventional bladder-cell tanks in containing fuel during crashes [8]. The test program consisted of three basic test series of wing sections, including fuel tanks. These tests were (1) deceleration; (2) impact; and (3) deformation. The first two test series were conducted with the wing tanks mounted on a carriage accelerated down a test track; the first with the wing tank rigidly attached to the carriage and the second with the wing tank catapulted from the carriage into a flat sandbag surface. The deformation tests consisted of torsional and bending tests conducted in a test rig.

The results of these tests showed that, although integral tanks could withstand over 20-G acceleration in the absence of a direct impact (resulting in fluid pressures of 30 to 40 psi), they had very low resistance to direct impacts. The tests also showed that the current bladder cells had low strength and inadequate stretching capability (low elongation). Thus, the cell walls could not withstand the dynamic pressure loads when support of the surrounding structure was lost.

The CAA investigators concluded that no current fuel tank had any crash-resistant characteristics to any appreciable degree and no particular type of tank was better. They also concluded that any type of wing tank was safer if (1) it was located outboard in the wing where the wing was not likely to break off; (2) a center spar was used to separate tanks fore and aft; (3) the wing was protected from ground contact by low nacelles or other structure; (4) heavy front spars and

leading-edge structures were incorporated into the wing; and (5) landing gear loads were not applied directly to the tank structure.

The first two full-scale crash tests of commercial transport airplanes were conducted for the FAA by Aviation Safety Engineering and Research (AvSER, formerly AvCIR) in 1964 [9 and 10]. The test program was designed to simulate typical conditions during survivable takeoff and landing accidents and to collect data on crash loads, accelerations, and fuel containment. The airplanes (a DC-7 and a Lockheed Constellation, Model 1649) were guided into a series of crash barriers using a monorail nose-gear guidance system. The aircraft were accelerated under their own power by remote control. Initial impact was against low barriers, which removed the landing gear, allowing the aircraft to become airborne (see figure 2-2). Subsequently the left wing impacted an earthen mound shaped to produce a simulated wing-low accident while the right wing struck vertical telephone poles simulating trees. The fuselage then struck an upward slope (8° for the DC-7, 6° for the Constellation), becoming airborne again until striking a 20º slope to simulate a steeper impact angle. The aircraft then slid to a stop. Impact speeds were 139 kts for the DC-7 and 112 kts for the Constellation.

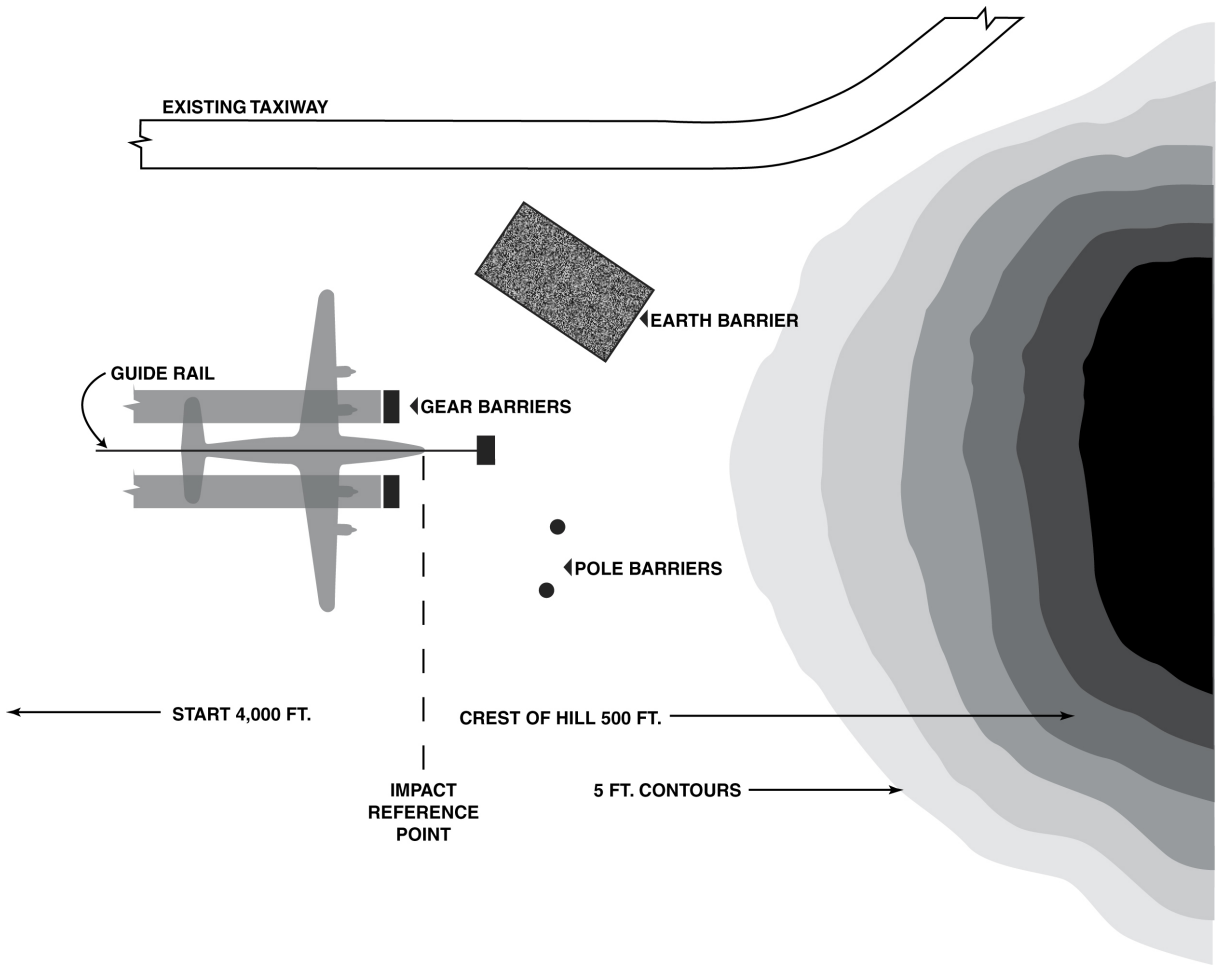

FIGURE 2-2. PLAN VIEW OF TEST SITE FOR DC-7 AND CONSTELLATION CRASH TESTS

The DC-7 had both integral and bladder fuel tanks while the Constellation had only integral tanks. One tank in each wing was filled with dyed gelled water while the rest of the tanks were filled with dyed liquid water. Only the minimal amount of fuel necessary to conduct the test was onboard in an auxiliary tank mounted in a location safe from impact. Even so, fuel and oil lines were ruptured when the engines were torn free in the DC-7 crash. A heavy mist of fuel and oil ignited and burned for several seconds, illustrating the ignition potential of the engine and the ease of ignition of fuel mists.

The wings of both aircraft suffered extensive damage, especially the right wings from the localized impacts of the poles. Both wings of the DC-7 broke at the wing roots and the outer panel of the right wing was sheared off. The left wing of the Constellation was partially separated at the wing root and the outer panel of the right wing was sheared off. In addition, the right wing of the Constellation was partially separated between the engine nacelles by the pole impact, finally separating completely as the aircraft slid along the ground. All of the fuel tanks in both tests were damaged and, in some cases involving pole impacts, destroyed. Massive spillage occurred from the tanks. Spilled fuel (H_2O) and mist surrounded the aircraft to a large extent, both while in motion and after coming to rest. (Figure 2-3 illustrates the spillage pattern of the Constellation.)

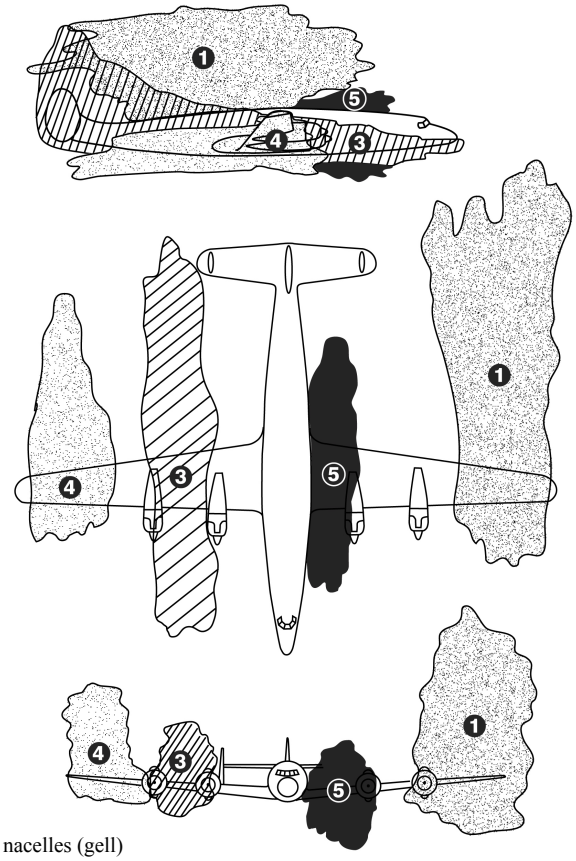

Legend

1. Left outboard wing tank (water)
5. Left wing tank at root (water)
3. Right wing tank between engine nacelles (gell)
4. Right outboard wing tank (water)

FIGURE 2-3. VISIBLE FUEL SPILLAGE OCCURRING 2.24 seconds AFTER CONSTELLATION IMPACT WITH MAIN GEAR BARRIERS

The gelled water was expelled immediately from both the DC-7 and Constellation right wing fuel tanks which were subjected to direct pole impacts. However, it took 2 hours for the gelled fuel to drain from the left wing tank of the Constellation, which suffered spanwise cracks in the bottom of the tank and a torn top.

The behavior of the two aircraft structures during the tests were quite different. The DC-7 structure was of the older design technique using relatively ductile skin supported by longerons, etc. The Constellation used a newer stressed skin design incorporating high-strength, relatively low elongation, aluminum similar to today's aircraft. In addition, the Constellation Model 1649 contained a totally new wing of increased span incorporating huge chemically milled, machined skins. The brittle Constellation structure broke into many small, jagged pieces of metal on impact, as contrasted to the DC-7 structure, which tended to crumple, crush, and tear. The greater hazard of jagged, broken structure (versus crumpled structure) to the survival of nonintegral fuel tanks is an area of concern in transport airplanes.

Even with the differences in aircraft structure, these tests resulted in very similar mechanisms and patterns of fuel spillage as occurred in the earlier tests of smaller and older airplanes. These common patterns allow the construction of a general model of fuel system damage, spillage, and mist formation that occurs in typical large transport airplane accident scenarios. Thus, it should be possible to derive solutions to the postcrash fire problem that are universally applicable to large transport airplanes, although implementation into specific airplanes would necessitate varying detailed designs.

2.2.2 Helicopter Crash Testing.

Although the FAA had conducted six helicopter drop tests by 1959, these tests were designed primarily to measure structural load factors during crashes [11]. The crash tests conducted by AvCIR for the U.S. Army in the early 1960s were the first designed to determine the behavior of helicopter fuel systems during crashes. The first of what would eventually be over 40 crash tests was conducted in October 1960 [12]. This test consisted of a moving crane drop of a twin-rotor, light-cargo helicopter with test conditions simulating severe but survivable conditions (forward velocity of 30 mph, 30-foot drop height). High-speed on-board and ground-based cameras documented the test and allowed visual analysis of events occurring during the crash. The test was designed to measure structural loads, seat restraint and test dummy loads, and to determine the performance of the regular fuel system and an experimental range extension fuel tank carried in the right-hand seat. The seats collapsed during the impact and the range extension fuel tank was ruptured in several places, resulting in large amounts of fuel spillage in and around the helicopter. The regular fuel system was not ruptured. More importantly, the test proved that this was a satisfactory and inexpensive method for crash testing.

Four more helicopter crash tests were conducted in the following year, all using the same test methodology that was used in the first test [4]. The basic purpose of these tests was to obtain acceleration and force data to define the survivable crash environment. This would, in turn, help the aircraft designer develop better components such as seats, restraint systems, and fuel systems.

Meanwhile, in-depth investigations of U.S. Army helicopter accidents began in the 1950s and would extend through the 1960s. These numerous accident investigations, coupled with full-

scale crash tests, were detailing some of the most common fuel system failures that occurred during helicopter crashes. These were

a. Many helicopter fuel tanks were located low in the structure and/or very near the outer surface of the aircraft, subjecting them to severe loads. Additional loads could be added by heavy cargo and, in some cases, by the engine or transmission. These loads would cause the tanks to rupture during the crash.

b. The tank would be punctured by jagged metal and broken components of the failing structure. When puncture coincided with the high-pressure loading of the tank experienced during the crash, the fuel tank wall would tear. This tear would progress rapidly away from the point of puncture.

c. Fuel tank fittings would be torn from the tank wall as the structure moved relative to the tank.

d. Fuel lines would be cut or torn apart if they were located in areas of displacing or failing structure.

From this knowledge, a system was developed to allow evaluation of the crash survival potential of a fuel system even though no accident record was available for that aircraft. Four crash tests were conducted on OH-4A and OH-5A helicopters after they had been evaluated in flyable condition [13 and 14]. The fuel systems were re-evaluated after the crash tests and close correlations between the pre- and posttest evaluations occurred in every case. The authors concluded that a trained evaluator could reliably evaluate the crash survival potential of an aircraft fuel system in the absence of accident data and that reliable estimates could be made even during the design stages of a specific aircraft. This evaluation system has been refined over the years and is currently in use today (see section 7).

2.2.3 The Postcrash Fire Environment.

NACA was the first (in 1953) to investigate and quantify the postcrash fire environment and to determine available escape times based on this data [15]. The data were obtained from the full-scale airplane crash tests previously conducted and from supplemental burns of aircraft hulks. It included measurements of the radiant heat, ambient air temperatures, and concentrations of carbon monoxide (CO). Escape times were calculated from the measured data and known human tolerance levels. (Escape time from thermal injury was based on the skin temperature which resulted in severe pain and second degree burning.) Escape times based on thermal injury varied from 50 to 300 seconds, depending on the position of the occupant in relation to the fire, size of the fire, and environmental conditions at the crash site. It was found that fuel volatility did not affect escape times when fuel mists occurred, as happens during most aircraft crashes. Escape time based on CO concentration was longer than for thermal injury, although the times did not differ greatly.

The NACA investigation also studied the effects of insulation on fuselage skin burn through times. Two identical enclosures, one insulated with 2 in. of glass wool held in place with a thin insulation and fabric pad and one uninsulated, were subjected to ground fuel fires. The study

found that the temperatures in the insulated enclosure remained below those in the uninsulated enclosure initially, but, after 7 1/2 minutes, the insulated enclosure burned through and then temperatures increased rapidly. The uninsulated enclosure did not burn through until 12 minutes after the fire started. The investigators surmised that the insulation prevented the reradiation of heat from the opposite skin surface, as occurs with uninsulated skin. However, the validity of this data to current aircraft with improved interior materials and different types of insulation must be questioned.

Subsequent studies determined that 0.035-inch-thick fuselage skin burned through in 63 sec [16]. The temperature inside the cabin did not rise until burn through occurred. Interior materials were the most important factor affecting the fire hazard once burn through occurred or flames entered through structural openings. Gases generated from burning materials can lead to a flash fire (flashover) in only a few minutes. In addition to toxic gases, large quantities of smoke are generated from burning fuel, oil, hydraulic fluid, and interior materials. This smoke obscures vision and makes breathing difficult.

More recent burn tests (1989) of contemporary transport airplane structures with newer, more fire-resistant interior materials showed that skin burn through still occurred approximately 60 sec after ignition of an exterior fuel fire next to the fuselage [17]. However, the fiberglass insulation and honeycomb composite sidewall panels acted as a fire barrier behind the skin after the skin melted away. Smoke obscuration inside the cabin occurred much earlier than significant flame penetration. (It should be noted that the test conditions assured that the insulation and panels remained intact. Any break in their structural integrity would alter these results.) The researchers also found that early threats to passengers when fire enters the fuselage through openings were (1) elevated temperatures and (2) reduced visibility from smoke, before burning interior materials became a factor. As determined in earlier tests, factors that greatly affected flame entry were wind conditions, door opening configuration, and fuselage orientation.

The contribution of the interior materials to the fire environment was determined by subjecting an intact fuselage to an external fuel fire adjacent to an opening in the fuselage. Wind conditions were quiescent so the survivability was controlled by the interior materials and not burning fuel. Survivability was dominated by cabin flashover, which occurred at about 210 seconds after ignition. Prior to flashover, seat-top temperature was near ambient. However, the researchers reported that visibility was reduced by smoke before any apparent impairment to the occupants from elevated temperature or toxic gases.

The above test results were corroborated during a test conducted by the FAA in 1996 to determine the burn through characteristics of a transport airplane exposed to a large pool fire upwind of the fuselage [18]. The design mode for the test was the B-737 ground accident in August 1985 in Manchester, England, which resulted in 55 fire fatalities. A Convair 880 was modified so it was similar inside to the B-737 in configuration and interior materials. The test had key elements of the Manchester accident, including fire size and location, relative wind direction and velocity, and automatically sequenced door and escape hatch openings. Measurements were taken throughout the cabin of temperature, smoke density, and O_2, CO, and CO_2 concentrations. The test configuration is shown in figure 2-4.

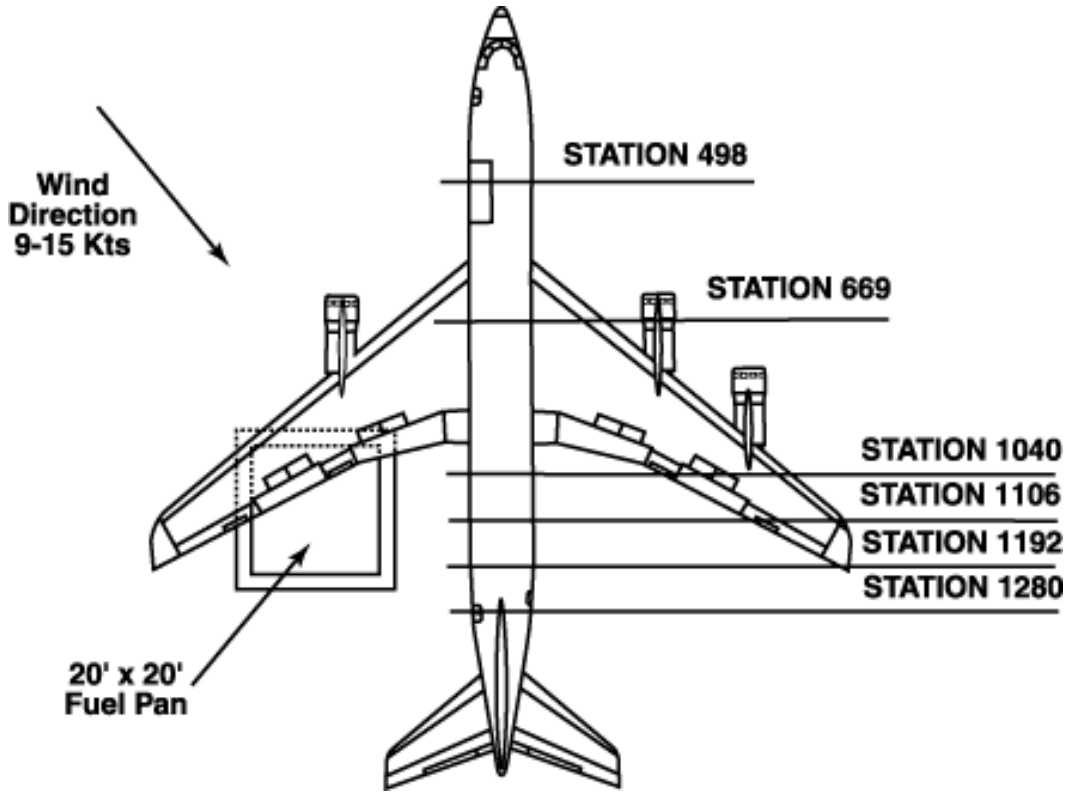

FIGURE 2-4. TEST CONFIGURATION AND SENSOR LOCATIONS (BY STATION NUMBER) FOR FAA BURN TEST

After ignition of the pooled fuel, a large amount of flame blew over the rear part of the fuselage. The fire burned through the fuselage into the cabin 71 seconds after ignition, igniting a seat 75 sec after that (146 sec after ignition). Fire also penetrated the empennage crawl through 70 sec after ignition. The mode of fire penetration was direct melting of the skin and burning of insulation and interior panels. The interior materials, once ignited, easily supported a self-sustaining fire. Thick black smoke filled the rear of the cabin within two minutes. As the fire intensity increased, the smoke moved forward, appearing in the first class cabin in slightly less than 3 minutes. Temperatures depended on the distance from the area of burn through and resultant interior fire. A series of three flash fires occurred in the main cabin, the first one 235 sec after ignition, causing a rapid temperature rise and decrease in oxygen. Passengers in this part of the cabin would have been subjected to nonsurvivable conditions at this time.

Although the incorporation of greatly improved fire-resistant interior materials affords increased safety and lengthened escape times during some fire scenarios, the benefits are not universal. Fuel flammability can be the overriding hazard in the case of large quantities of fuel spillage and/or when openings in the fuselage allow flames and hot gases and smoke from the fuel fire to enter the fuselage [19]. In this case, the upper layer of the cabin can quickly become contaminated with degradation products from the fuel fire, leading to flashover. The heat and fire spread characteristics of a fuel fire can also cause materials with outstanding fire resistance to burn readily. For these reasons, the National Safety Council concluded that the reduction of the fire hazard of fuel is critical in improving survivability in postcrash fires.

2.3 DEVELOPMENT OF THE CRASH-RESISTANT FUEL SYSTEM (CRFS).

2.3.1 Early Developments.

Following the disappointing results of the FAA's wing fuel tank tests conducted in the late 1940s, the researchers recommended that any type of tank was safer if it was protected by heavier structure (e.g., the front spar) and located away from areas of structure prone to pronounced displacement during a crash (e.g., wing roots and landing gear) [8]. They also proposed the development of high-strength and energy-absorbing properties in flexible bladders as offering the most promising solution. They recommended the use of flexible fuel lines and breakaway self-sealing couplings at the firewall to prevent fuel line failure and the use of inertia-operated shut-off valves at the fuel tank outlets.

The FAA then embarked on a 10-year program, from 1950 to 1960, to develop improved crash-resistant fuel tanks and self-sealing breakaway valves for use in aircraft fuel systems. Accident reports and accident investigation data were studied to determine impact attitudes and load factors in severe but survivable accidents for both fixed- and rotary-wing aircraft. Based on this data and the data obtained during the previous wing tank tests, a resultant load factor of 35 G's was recommended for fuel tank design in fixed-wing aircraft since this load factor was considered likely under severe but survivable crash conditions [11]. It was also proposed that crash-resistant fuel cells be equipped with accessories and components which would not tear the cell and which could seal the fuel inside the cell in the event of appreciable cell movement.

Six helicopter drop tests were conducted in the late 1950s to furnish additional data for rotary wing aircraft [11]. The helicopters were dropped from a height of 26 feet, resulting in an impact velocity of 41 ft/sec. Accelerometers measured structural and dummy loads. The tests resulted in an average structural load factor of 32 G's. The instrumented dummies indicated the impacts were survivable, though injuries could be expected. Thus, the investigators concluded that a load factor of 35 G's was also justified for helicopter fuel systems.

Three of the drop tests were of helicopters with the fuel tank located in the bottom of the structure underneath the two rear seats. The conventional bladder fuel cell ruptured on impact and the fluid in the cell flooded the cabin interior. The two additional drop tests used self-sealing fuel cells made from material possessing a higher tensile strength. These cells did not rupture. The FAA investigators concluded that, though previously thought to be impossible or at least impractical, it was feasible to design "squash-resistant" fuel tanks for helicopters.

Meanwhile, in the mid-1950s, 5 different fuel cell materials, developed in a cooperative effort with the rubber manufacturers, were being tested [20]. These materials were a composite, nonmetallic flexible construction made from elastomer-impregnated fabric arranged in layers or plies. Two types of tests were conducted: (1) strength and energy-absorbing properties of material samples were determined using a compressed-air gun and (2) impact tests were conducted of completed fuel cells mounted in two different simulated wing structures. The researchers found that the impact resistance varied linearly with the tensile strength and energy-absorbing properties of the material and was affected greatly by the fuel cell construction (e.g., diffusion barrier liners in the cell and reinforcement at vulnerable locations of the cell).

A method for calculating the tensile strength of crash-resistant bladder cell materials was developed based on the wing impact tests. It was felt that the tanks should not rupture under loads sufficient to tear the wings from the fuselage. The tensile strength required was to be determined by using a compressed-air gun [21]. This entire effort ultimately resulted in the issuance of specification MIL-T-27422A for fuel tanks in 1961. [*Subsequent full-scale testing showed that tensile strength was not the main factor in determining the crash resistance of fuel cells and MIL-T-27422A was subsequently revised*.]

As the bladder cell program was nearing completion, the FAA began a program to develop crashworthy safety valves and accessories for the new tanks. This program arose from the recognition that the ability of the fuel cell to remain intact as it moved during a crash was influenced by the accessories attached to it. Therefore, crash-actuated shutoff valves were needed at all cell openings and breakaway attachments to aircraft structure were needed for all fuel cell components and fuel cell hangers. Guidance for development of shutoff valves and breakaway accessories was obtained from fuel cell fitting manufacturers, aircraft manufacturers, and fuel cell manufacturers at a conference sponsored by the FAA's William J. Hughes Technical Center. The Center then designed, fabricated, and tested shutoff valves and frangible attachments to be used with the new crash-resistant fuel cells [22]. The results of 91 dynamic tests provided enough design and performance data to derive specification requirements for prototype valves and accessories.

In 1958, contracts were awarded to aircraft valve manufacturers for prototype breakaway valves and accessories. Valve assemblies were received the following February and tested. As a result of this program, the U.S. Air Force prepared a specification for self-sealing breakaway valves (MIL-V-27373), which was issued in 1960.

The efforts of this early development program led to the issuance of criteria for the design and installation of crash-resistant fuselage fuel tanks in 1958 [23]. Formulas were given for calculating tensile strength of material necessary for particular tank configurations. Although later testing would show that tensile strength alone was insufficient for crash-resistant fuel cell materials, other criteria presented are still the basis for much of today's CRFS design. These are:

a. Fuel tanks should be located so that they are

- not likely to undergo scraping action with the ground
- not in front of the forward plane of the front wing spar
- not under or directly in front of heavy masses
- as far as possible from occupants and engines

b. Landing gear structure should not be attached to fuel cell supporting structure.

c. Fuel cell supporting structure and components in the immediate vicinity of the tank should be designed or arranged to minimize the possibility of puncturing or tearing the cell.

d. Flexible fuel and vent lines should be used to provide as much movement as possible during crash conditions.

In addition, although much design and testing would still have to be done, the following criteria were included:

a. Shutoff valves should be located in the fuel cell fuel and vent line outlets, which would automatically close in the event of any appreciable relative movement of the cell with respect to another cell or surrounding structure.

b. Attachments holding the cell to surrounding structure should be designed so the cell can pull loose from the structure without tearing the cell wall.

2.3.2 Helicopter CRFS Development.

The first extensive testing of the new crash-resistant fuel tanks occurred as a part of the U.S. Army-funded research conducted at AvSER. Several fuel tank manufacturers had already qualified fuel cells to MIL-T-27422A. Several of these cells were installed in two CH-21 helicopters, which were crash tested in October 1963 [24]. The first test helicopter was flown and crashed by a radio link remote control system. Impact velocities were 38.5 ft/sec longitudinal and 11 ft/sec vertical. The second helicopter was dropped from a mobile crane, impacting with a longitudinal velocity of 38.6 ft/sec and a vertical velocity of 36.8 ft/sec. The tanks were punctured in the low-limit crash and failed catastrophically in the more severe crash. These tests clearly showed that the current crash-resistant tanks were not adequate. The vertical loading of the under-floor tanks had been underestimated. Also, puncture and tearing of the tank material from jagged metal and the pulling out of fuel tank fittings had not been addressed in MIL-T-27422A. It was apparent that resistance to puncture and tear propagation were equally as important as the material's tensile strength.

A cooperative effort was undertaken with several fuel cell manufacturers to develop and test improved tank materials [24 and 25]. A large number of materials were screened and the most promising were tested for penetration and tear resistance using a chisel dropped onto a material sample and a pull test of material having a slit in it, respectively. Full-scale tanks for crash testing were then constructed from the most promising of these materials. These tanks, as well as typical aluminum tanks, standard aircraft tanks and MIL-T-27422A tanks were tested in three fixed-wing and three helicopter crash tests conducted in 1964 and 1965. The fixed-wing (C-45) aircraft, containing two fuel tanks in each wing, were accelerated along a monorail into a 35-degree barrier on the left and embedded poles on the right so that both wings suffered extensive damage. The helicopters (CH-34 and CH-21) were dropped from a mobile crane. The helicopter fuel tanks were located under the floor with rocks mounted beneath the fuselage or heavy cargo above the tanks. All were severe but survivable crashes.

The test results are shown in table 2-1. All of the tanks tested exhibited massive failures except for those made by Goodyear ("tough wall" and "fuzzy wall"), which showed good impact resistance. The "tough wall" material consisted of three to four plies of nylon cloth oriented at various angles and bonded together with a resin. The "fuzzy wall" tanks were made from a 3/8-inch-thick nylon felt pad with a variety of inner membrane sealing films or layers. The investigators concluded that fuel tanks constructed of materials such as those made by Goodyear could provide excellent crash resistance at a reasonable weight. They also concluded that MIL-T-27422A was inadequate and should be revised to include provisions and tests for impact, penetration, tear resistance, and fitting retention.

TABLE 2-1. SUMMARY OF AvSER TEST RESULTS—FULL-SCALE CRASH TESTS

	Location									
	Wing				Fuselage		Under floor			
Tank Type	No. Tests	Pole Impact	No. Tests	Wing-Tip Impact	No. Tests		No. Tests	No Cargo	No. Tests	1,000-lb Cargo
Pliocell	0	-	0	-	3	3 Failed****	3	3 Failed	0	-
Crash Resistant***	0	-	0	-	2	2 Failed	0	-	0	-
Aluminum	2	2 Failed	2	1 Failed	0	-	1	1 Failed	0	-
Exp. Tank (A)**	0	-	1	No Failure	0	-	0	-	1	Failed
Exp. Tank (B)**	0	-	0	-	0	-	0	-	1	Failed
Exp. Tank (C)**	0	-	0	-	0	-	0	-	1	Failed
Self-Sealing	0	-	0	-	0	-	4	4 Failed	0	-
Net Tank	0	-	0	-	0	-	0	-	1	Failed*****
Tough Wall Hollow	2	No Failure*	2	No Failure	1	1 Failed	1	No Failure	1	Failed
Tough Wall/ Honeycomb	1	No Failure*	1	No Failure	0	-	2	No Failure*	1	No Failure
Fuzzy Wall	1	No Failure	0	-	0	-	0	-	1	No Failure

* Minor Seepage – One Tank
** Firestone Experimental Tanks
*** MIL Specification T272422A
**** Previous CH-21 Tests by AvSER
***** Spillage Approximately 1 gal./min.

Development of new fuel tank materials continued. Goodyear soon developed two new materials known as ARM-018 and ARM-021 [24]. Both were laminates using woven ballistic nylon cloth impregnated with a urethane elastomer. The typical crash-resistant cell then in use had a tear strength only 9 percent that of ARM-021.

In 1966, Goodyear Aerospace, The Aeroquip Corporation, E. B. Wiggins Corporation, and AvSER, working together, began a comprehensive program to improve the crash resistance of U.S. Army helicopters and to extend the crash resistance of the new, improved fuel cells to the entire fuel system. The fuel systems of four current U.S. Army helicopters (UH-1B, UH-1D, CH-47, OH-6A) were analyzed and evaluated using design drawings, inspections of as-built aircraft, and available accident records [26]. Components analyzed included fuel cells (location, shape, and installation), fuel cell components, and their attachments (drains, vents, filler necks, boost pumps, etc.) and the fuel transfer system (fuel cell interconnects, fuel lines, fuel line fittings, etc.). The electrical systems and other potential ignition sources also were evaluated. Recommendations were made for improving the crash resistance of all four helicopter fuel systems. These recommendations included, among others, the use of the new crash-resistant fuel tanks, frangible attachments for all fuel tank components which had to be attached to the aircraft structure, flexible fuel lines and stronger fuel line fittings, and self-sealing breakaway valves at all tank outlets and at high-risk locations in the fuel lines.

In addition to the fuel system analyses, a comprehensive testing program was conducted on currently available aircraft fuel lines and fittings. Static tension and shear tests were conducted on both aluminum tubing and flexible, steel-braid-covered hose. All common sizes of AN fuel line fittings (straight and elbow) were tested in conjunction with the hoses and tubing. It was found that the aluminum tubing and the smaller aluminum fittings were unsatisfactory for crash-resistant systems. Although the fittings failed before the hose failed or pulled out, the aluminum tubing failed or pulled out before the fitting failed. It was also determined that the hose assemblies had elongations three to four times that of the tubing assemblies.

Meanwhile, prototype frangible attachments for fuel cell components were fabricated and subjected to extensive testing [26]. Results showed that plastic inserts in the metal attachment fittings could be readily developed for any application.

Since no self-sealing breakaway valves were commercially available, currently used quick-disconnect valves were modified for use in tank outlets and in-line applications. These valves underwent an extensive series of dynamic tests and performed well under a wide range of conditions. This effort showed that a high degree of protection was possible with this type of valve and that the development of specifically designed self-sealing valves was quite feasible. The investigators also determined that MIL-V-27393A for self-sealing breakaway valves was inappropriate because it was too specific and restrictive in design. This specification has since been canceled and replaced by SAE ARP 1616A.

The first crash test of a complete crash-resistant fuel system was conducted by AvSER early in 1968 [27]. A UH-1A helicopter was equipped with crash-resistant fuel, oil and electrical systems. The system included (1) special crash-resistant fuel tanks and a felt-covered oil tank, (2) flexible fuel and oil lines in areas where rigid metal lines characteristically failed, and

(3) self-sealing breakaway valves and fuel and oil line disconnects at strategic locations to allow for relative displacement of aircraft components. A diagram of the crash-resistant fuel system is shown in figure 2-5. The self-sealing breakaway valves in the fuel lines were modified quick-disconnect valves. The breakaway valves installed in the tanks at the aft crossover tube outlets were prototype valves made to safely separate by actually fracturing portions of the valve when crash forces were great enough, allowing each side of the valve to close. These "one shot" valves were made by the two valve manufacturers to meet AvSER specifications. All of the individual crash-resistant fuel system components had been extensively tested beforehand using both static and dynamic tests.

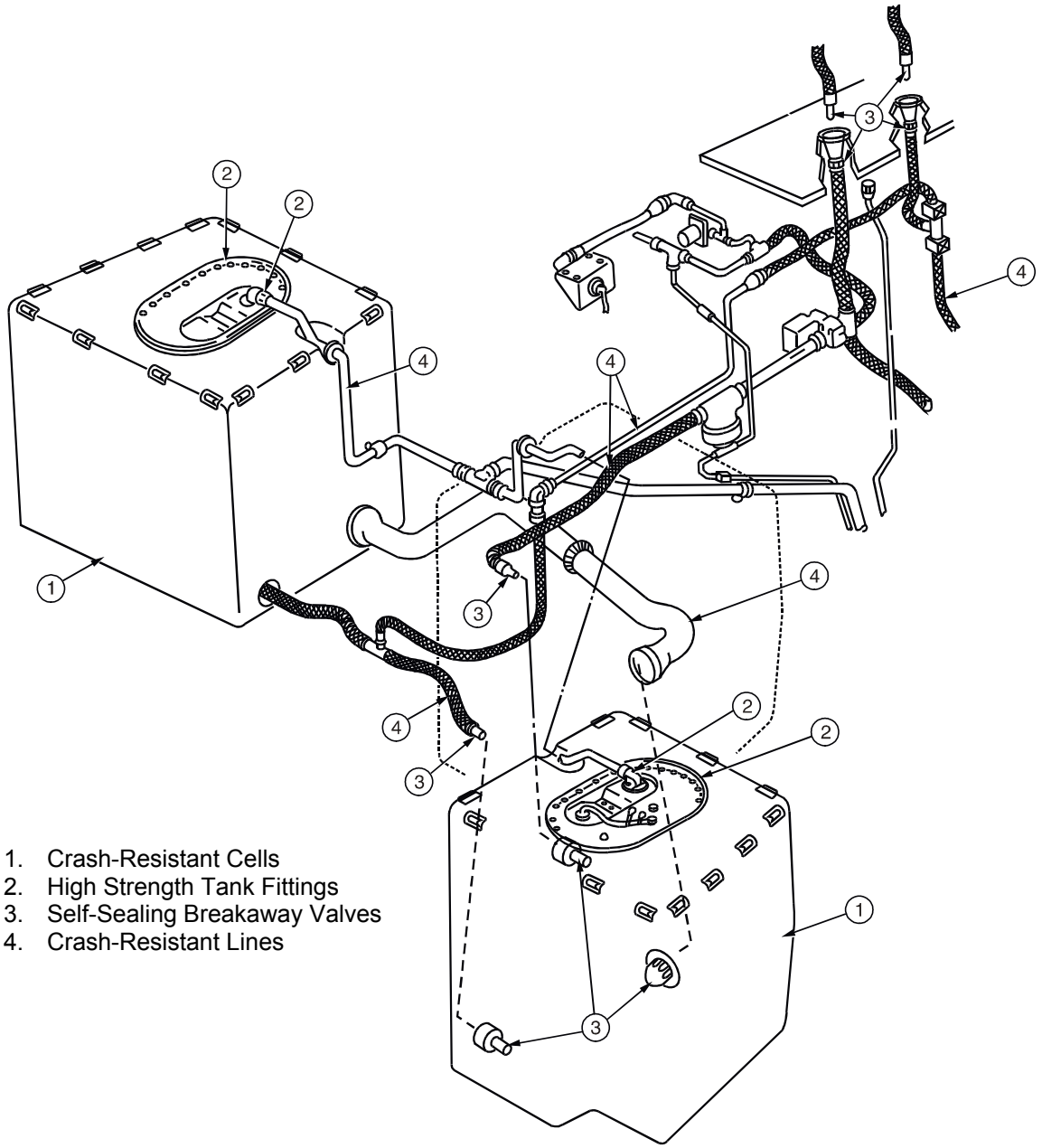

FIGURE 2-5. UH-1A CRASH-RESISTANT FUEL SYSTEM

The helicopter was remotely flown to impact with a longitudinal velocity of 81 ft/sec and a vertical velocity of 23 ft/sec. The impact angle was 15.5 degrees. All of the systems functioned satisfactorily and there was no fuel or oil spillage. However, the vertical loading during impact was insufficient to activate all of the fuel system crash-resistant components. A follow-on test was conducted by dropping the fuselage section containing the fuel system onto several vertical railroad ties. The tie beneath the left cell impacted the boost pump, driving it up into the fuel cell and pulling the mounting out of the cell by shearing the tank wall at the bolt holes. The right cell was also severely impacted on the bottom but did not rupture. The self-sealing quick-disconnects used in the forward and aft crossover tube connections functioned properly, disconnecting and sealing the tank outlets. The fact that the conventionally mounted pump fitting sheared the tank wall at the bolt holes clearly indicated that new, 100-percent retention designs must be used.

2.3.3 Implementation of CRFS in Helicopters.

The implementation of CRFS technology in the military proceeded along two complementary paths. One path was the preparation of design guides and specifications incorporating the new technology and the other was the actual design and installation of CRFSs in U.S. Army helicopters.

In 1965 the U.S. Army initiated, under its contract with AvSER, a project to consolidate the knowledge and design criteria published in the previous AvSER reports into one report. This report was to summarize the state-of-the-art in crashworthy technology and include pertinent work conducted by other agencies as well as that done by AvSER. This report was published in 1967 as the Crash Survival Design Guide [28]. The Design Guide, as it came to be known, included all aspects of crashworthiness (aircraft crash survival impact conditions and design pulses, airframe crashworthiness, seat and restraint harness design criteria, occupant environment criteria, emergency escape provisions and postcrash fire safety). The section on postcrash fire safety was mostly devoted to the design of CRFS. Some design criteria were presented for ignition source control, such as de-energizing electrical sources, inerting hot surfaces, and shielding wires and electrical components. A brief discussion of the postcrash fire environment as related to human tolerance and escape times also was presented.

The criteria for CRFS included a detailed analysis of MIL-T-27422A and showed why the cut- and tear-resistance of the fuel tank material was vital to its survival during a crash. Properties of the new materials were presented along with those of then standard materials, as shown in figure 2-6. The areas under the curves in figure 2-6 denote the energies necessary to fail these materials. The new materials absorbed eight to twelve times more energy than the MIL-T-27422A material.

The Design Guide also stressed the interaction of the fuel system components and aircraft structure during the crash. Since failure of the tank was often caused by the tearing of the tank wall around the attachments as the tank moved in relation to the surrounding structure, the use of frangible attachments and self-sealing breakaway valves was specified. Protected locations for fuel lines, extra length in the lines, and the use of flexible hose with a braided steel covering were recommended.

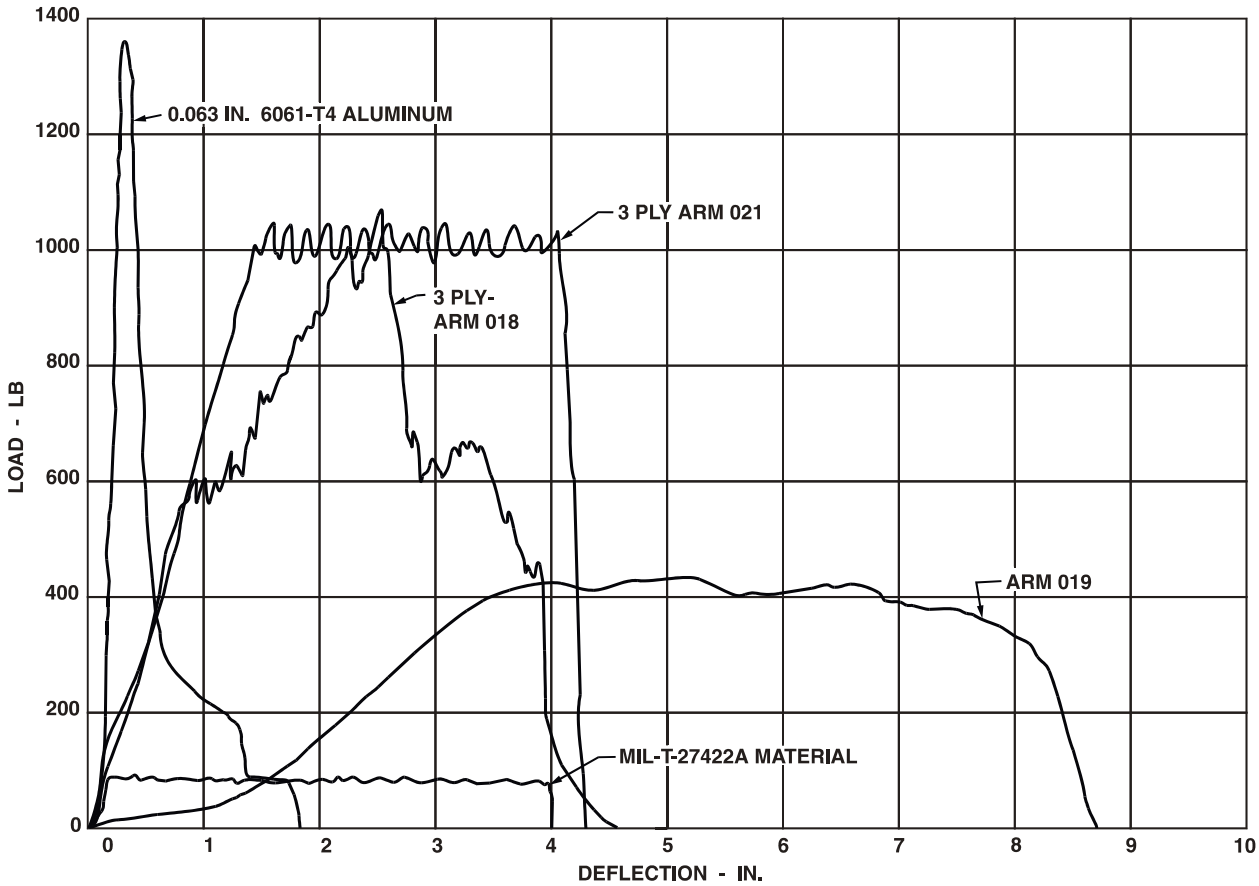

FIGURE 2-6. RESISTANCE TO TEAR FOR TANK MATERIALS

The Design Guide was updated to include research completed by AvSER (now a division of Dynamic Science) and Goodyear through January 1969 [29]. Major additions to the CRFS design criteria included examples of high-strength fuel tank metal insert retention methods and the requirement that the inserts have a retention strength of at least 80 percent of the tank wall strength. Drawings showing different applications of self-sealing valves also were included along with the requirement that such valves, as well as all frangible attachments, should separate at less than 50 percent of the load required to fail the attached component. In addition, the vent system design was expanded to prevent vent-line failure or spillage from a rollover. Minimum loads for fuel line fittings were also specified.

Additional research and testing of fuel tanks resulted in the formulation and publication of MIL-T-27422B in February 1970 [30]. The specification was completely revised and included new requirements to ensure the fuel tanks would, indeed, be crash resistant. In addition to laboratory tests of the fuel tank material to measure the puncture and tear resistance, tests were also required to assure satisfactory tank fitting retention strength. Perhaps the most important change was the inclusion of dynamic testing of the completely configured fuel tank by dropping it, filled with water, onto a flat surface from a height of 65 feet.

The research, design, and testing involved for the development of the UH-1D/H helicopter CRFS (begun in 1968) yielded much more knowledge about design criteria for CRFS and their

components. Accordingly, the Design Guide was revised again in 1971 [31]. Extensive additions were added in all areas, including that section devoted to CRFS design. Requirements from MIL-T-27422B were added, including the 65-foot drop test of the fuel tank with no leakage. Test methodology was included to assure tank fitting retention strength of 80 percent of tank wall strength. Requirements for the separation loads of frangible attachments and self-sealing breakaway valves specified that the attachments and valves must meet all operational requirements but should separate at 25 to 50 percent of the load required to fail the attached system or component. Methods of analyzing and calculating the force in the most likely direction of occurrence during impact were presented. Criteria for the self-sealing valves stated that the valves should be specifically designed for a "one shot" emergency breakaway function. Additionally, minimum loads were required for fuel lines and their fittings and test methods were specified. This edition of the Design Guide was the basis for the criteria contained in MIL-STD-1290 released in January 1974 [32]. The Design Guide has since been revised and expanded twice as more knowledge has become available in all areas of crashworthiness. The latest revision was published in 1989.

In 1968, the U.S. Army committed itself to markedly reducing postcrash fires in survivable helicopter accidents. Dynamic Science thus began a program for the U.S. Army to integrate a CRFS into the UH-1D/H helicopter manufactured by Bell Helicopter Company [33 and 34]. The effort began by studying UH-1D and related accident cases to determine problem areas. The fuel system also was evaluated by the previously developed rating system (which had been expanded to include a more detailed process) to determine the overall fire hazard attributable to specific fuel system components. Crashed but intact hulls provided data for dimensions, possible interferences, and general system layout. As work progressed, a close liaison was maintained with the Bell Helicopter engineers and component suppliers. The design used many off-the-shelf items, but some items (which were only laboratory specimens at the beginning) had to be designed and built by various suppliers, then tested for operational and crashworthy acceptability. Almost 700 static and dynamic tests were conducted to assess the crash effectiveness of the various components in the fuel system.

The UH-1D/H CRFS is illustrated in figure 2-7. The CRFS consisted of five interconnected MIL-T-27422B fuel tanks and tank outlets; self-sealing breakaway valves at the most vulnerable tank outlets; flexible steel-braid-covered hose with in-line breakaway valves at probable failure points; and frangible connectors at tank-to-structure interfaces (tank components and hangers). Three full-scale crash tests were conducted with helicopters containing the CRFS: one vertical drop test and two tests by guiding the helicopter down an inclined cable, all onto irregular terrain consisting of several large rocks and a stump. The fuel system generally performed as designed with only a few components allowing some leakage. The fuel tanks did not fail at all. The UH-1D/H CRFS was judged to be highly resistant to failure in survivable accidents.

In April 1970, with the component leakage problem resolved, the first UH-1H helicopter with a CRFS came off the production line and all subsequent production helicopters were equipped with the CRFS. The manufacturers of the other military helicopters, i.e., Boeing, Sikorsky, Hughes, and Bell, started designing crash-resistant fuel systems for their helicopters using consulting input from the AvSER group of Dynamic Science and past AvSER employees who

had joined the Robertson Research Group at Arizona State University. An extensive retrofit program was also begun to equip already manufactured helicopters with a CRFS.

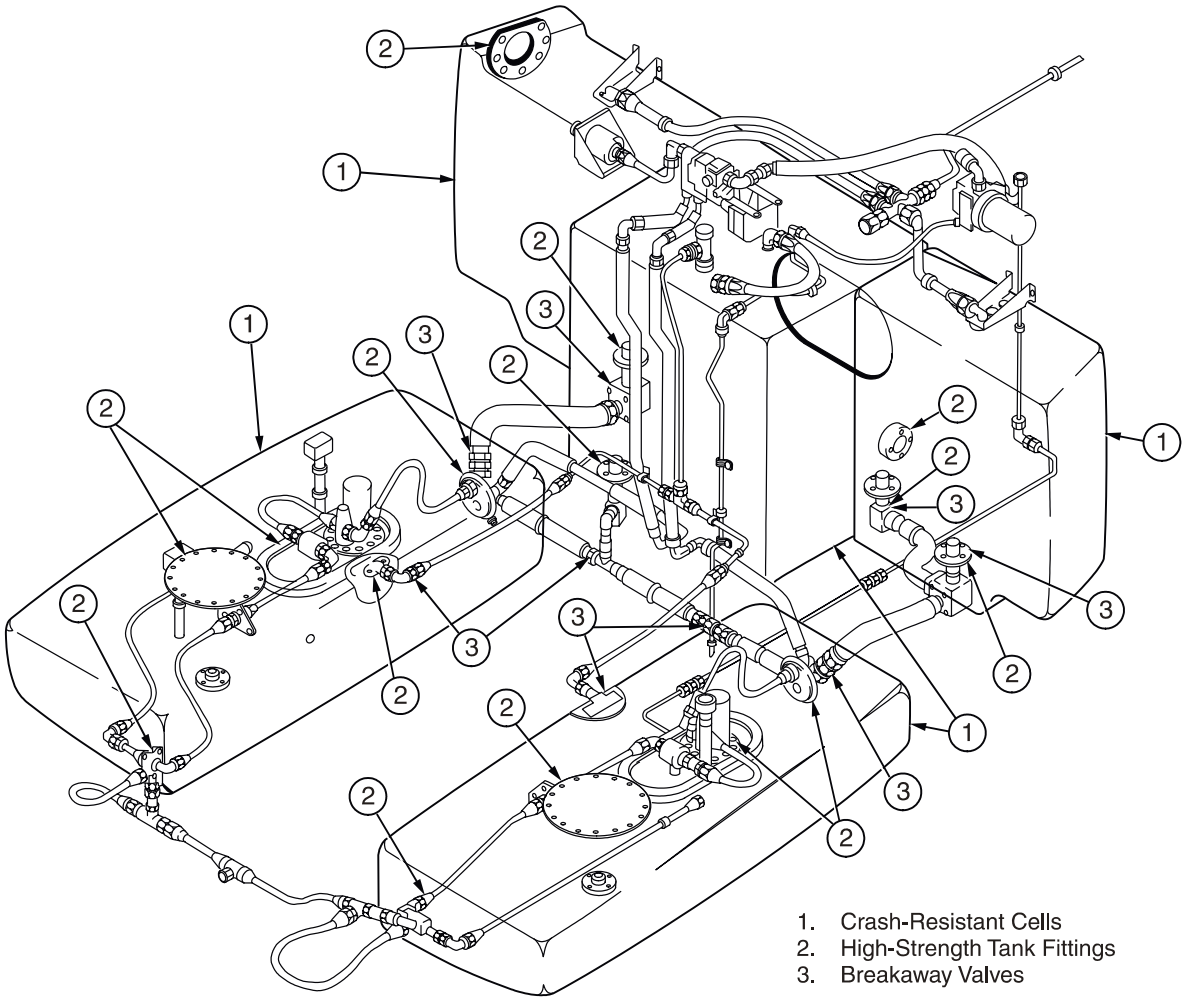

FIGURE 2-7. UH-1D/H CRASH-RESISTANT FUEL SYSTEM

A study conducted by the U.S. Army of helicopter accidents from 1970 through mid-1973 showed that the CRFS performed remarkably well [35]. There were no thermal injuries or fatalities in any of those helicopters equipped with a CRFS. A later study of U.S. Army helicopter accidents from 1970 through 1976 corroborated the outstanding performance of the CRFS [36]. Data from this study showed that the CRFS had reduced thermal injuries by 75 percent and had eliminated thermal fatalities. The investigators concluded that the CRFS "..... has been shown to be a highly successful and operationally effective mechanism."

In 1975, researchers who had been instrumental in developing the CRFS for military helicopters concluded that it would be a logical step to provide postcrash fire protection to the civilian aviation industry and that no new scientific breakthroughs would be necessary to do this [37]. Shortly thereafter, at least one manufacturer was planning to incorporate some CRFS technology

into one of its civil helicopters [38]. This twin-engine, eight-passenger helicopter was first flight tested in 1976 and scheduled for delivery in 1979 (actual delivery started early in 1980). The helicopter contained four crash-resistant fuel cells—two in the sponson structures and two in the fuselage just aft of the passenger compartment. The attaching sponson fuel and vent lines incorporated self-sealing breakaway fittings at the junctures of the sponsons and fuselage. (The fuel cells, though not as crash resistant as MIL-T-27422B fuel cells, had passed a 50-foot drop test and were a marked improvement over the regular bladder cells.)

By 1986, the Aerospace Industries Association of America (AIAA) had established a Helicopter Crashworthiness Project Group to determine if crash safety improvements were needed for future civil helicopters. This group concluded that "Energy attenuating seats with shoulder harnesses and a crash-resistant fuel system are significant crash safety improvements that can be made for future civil helicopters ...." [39]. They also called for lower crash-resistant requirements for the fuel system since they believed the civil survivable crash environment was not as severe as the military's. They recommended that the test methods of MIL-T-27422B be used but with lower criteria, i.e., a drop height of 50 feet (56 ft/sec) with the fuel tank only 80 percent full of water. They also determined that the CRFS should tolerate displacement between components due to structural deformation during a crash and that stretchable hoses, extra length hoses, self-sealing breakaway valves and frangible fuel cell attachments might be needed.

The criteria recommended by the Committee for crash-resistant fuel tanks in civil helicopters are shown inside the enclosed area of table 2-2. This table shows the range of fuel cell bladder material in use at the time. (Uniroyal and FPT are shown because their data was immediately available, but other manufacturers also made fuel cell materials in the same range.) Most civil helicopters flying then were using material similar to the standard bladder material shown on the left of table 2-2, but the author reported that nine models of civil helicopters did incorporate some degree of crash resistance in their fuel systems by 1986.

Note: The fuel cell drop tests reported in table 2-2 did not include the surrounding aircraft structure. The low tear resistance and puncture resistance of some of the materials as compared to that of the MIL-T-27422B material (shown on the right of table 2-2) will compromise the integrity of the fuel cell during a crash in which the cell wall must bridge a gap in the surrounding structure caused by structural displacement during a crash. If the cell wall comes in contact with sharp objects or torn structure at this time, it would be very vulnerable to puncturing and tearing. This type of failure was discovered early in the development of crash-resistant fuel systems and has been discussed at some length. Certainly the crash experience of the military helicopters, both with and without crash-resistant fuel systems, as well as the numerous helicopter crash tests conducted over the years, substantiate the need for high levels of puncture and tear resistance of fuel cell materials in all helicopters.

A study conducted for the FAA in 1994 found that ten models of civil helicopters incorporated some degree of crash resistance in their fuel systems at that time [40]. The primary purpose of the study was to identify levels of crash resistance that could be incorporated into civil helicopters in different areas, including the fuel system. This study also recommended a 50-foot drop test for the fuel cell versus the 65-foot drop required by the military.

TABLE 2-2. CRFS FUEL CELL MATERIAL COMPARISON (circa 1983)

Test/Description	Standard Bladder US-566RL	Safety Cell US-770	Safety Cell US-756	FPT** FPT/ CR.615	Military MIL-T-27422B US-751
Drop height with no spillage (ft)	NA	50 (80% Full)	50* (80% Full)	65 (Full)	65 (Full)
Constant rate tear (ft-lb)	NA	400	210.0	42	400
Tensile strength (lb) Warp Fill	 140 120	 168 158	 1717 1128	 NA NA	 NA NA
Impact penetration (5 lb Chisel) Drop height (ft)) Parallel/warp 45° Warp	 NA NA	 1.2	 8.5 8.5	 10.5	 15 15
Screw driver (lb)	25	333-446	370.5	NA	NA
Material weight (lb/ft^2)	0.12	0.36	0.40	0.55	1.04
Weight increase factor	1.0x	3.0x	3.3x	4.6x	8.7x

* Also dropped from 65 ft with no spillage
** 350% Elongation

Design configurations proposed for civil helicopter CRFSs included crash-resistant fuel cells; flexible, steel-braid-covered hose for fuel lines; self-sealing breakaway valves where the fuel line passes through the firewall and at other locations where necessary (e.g., tank outlets, tank cross-feed lines); frangible attachments for all tank component-to-structure attachments; suction fuel feed; and means of preventing fuel spillage through the vents. The development of CRFS technology had come far enough by this time that the study report was able to list manufacturers of crash-resistant fuel cells, fuel lines, and self-sealing breakaway valves for the civil aircraft industry.

In 1990, the FAA proposed amendments to Title 14 CFR, Parts 27 and 29, to minimize postcrash fire in survivable helicopter impacts by specifying new requirements for fuel system crash resistance in civil rotorcraft. The Final Rule, effective in 1994 for newly certificated aircraft, adds Sections 27.952 and 29.952, respectively, titled Fuel System Crash Resistance. These sections require 50-foot drop tests for each fuel tank; minimum inertial load factors for tank design and installation; self-sealing breakaway couplings at tank-to-fuel line and tank-to-tank connections and at those points in the fuel system where local structural deformation could lead

to the release of fuel; frangible or deformable attachments between fuel tanks and fuel system components to rotorcraft structure; and separation of fuel and ignition sources. In addition, rigid or semirigid fuel tank or bladder walls must be impact and tear resistant. These amendments incorporated many of the successful strategies that were imposed on military rotorcraft by MIL-T-27422B and MIL-STD 1290A.

2.3.4 Airplane CRFS Development.

Although the U.S. Army-funded CRFS research program had succeeded in the development and installation of CRFSs in military helicopters by 1970, the development of CRFSs for fixed-wing aircraft did not proceed as rapidly or with the same sense of urgency. The impact of the increased fire fatalities due to the Vietnam War undoubtedly spurred on the U.S. Army's program while no such emergency existed in the civil sector. In addition, although the basic principles underlying the CRFS are the same for all aircraft, designing a CRFS for fixed-wing aircraft was inherently more difficult than designing for the relatively box-like structure of a helicopter. Thus, CRFS research and development efforts for fixed-wing aircraft continued.

In the mid-1960s, around the same time that the full-scale C-45 crash tests were run (previously described in section 2.3.2), a series of tests were conducted on a DC-7 wing containing CRFS components [41]. High-strength bladder fuel cells, frangible attachments, self-sealing breakaway valves, and fiberglass protective liners were installed in one section of the wing in place of the standard bladder cells and the integral tank. The standard tanks remained in the other section of the wing. The wing was mounted on a jet-propelled dolly and accelerated into a decelerator. Eleven controlled deceleration tests ranging from 2 - 21 G's were conducted. There were no failures in either the standard or crash-resistant fuel cells and there were no inadvertent valve closures in the CRFS.

A final destructive test was conducted where the wing was run into two vertical poles (at 77 kts) positioned to shear the wing panels at the outboard nacelles. Both outboard nacelles were severed from the wing. The standard fuel system integral tank was split vertically and the bottom skin and center spar were torn free. The outboard bladder cell was ripped and punctured. All of the fuel was lost before the test specimen could be stopped. The CRFS front and rear outboard cells were punctured and the rear cell was also ripped by structure after the liner was torn free. All of the self-sealing valves functioned satisfactorily except for two 3-inch transfer valves between ruptured and undamaged cells. It was concluded that the breakaway valves, which were actuated by cables containing weak links, needed a more positive means of triggering. However, it took 17 minutes for all the fuel to drain from the CRFS compared to the near instantaneous fuel loss from the original fuel system.

Subsequently, in the late 1960s, the FAA conducted more DC-7 wing section tests to determine the capability of a CRFS using ARM-021 fuel tanks [42]. The three tanks in each wing were interconnected with cable-lanyard-actuated self-sealing breakaway valves. The void between the tank walls and skin was filled with Styrofoam backing board. The wing sections impacted a log and steel stanchion held in place by two shear pins. Twenty-five-mph tests were conducted with a pendulum facility and 75-mph tests were run on a catapult and track facility.

The first two low-speed tests were not severe enough to damage the cells or actuate the valves. A third test resulted in the stanchion intruding 16 inches into the middle tank. All of the valves closed but there was a slight cut in the tank from jagged metal (6-gal/hr leakage). The first 75-mph test pulled the center cell from its frangible fastenings to the wing structure. The valves closed but there was a small leak (10 gal/hr) from a piece of metal piercing the cell. In the second 75-mph test, the middle cell was torn from the frangible fastenings, activating the valves. The wing flipped over and slid upside down, resulting in a broken filler cap and the loss of all fuel in the center cell. However, there was no loss from the other two interconnected cells because the self-sealing breakaway valves closed. In any case, the leakage rates were much less than with integral tanks. The researchers concluded that a foolproof method to prevent inadvertent closing of the self-sealing breakaway valves was needed so these kinds of valves could be used in fixed-wing aircraft. They also believed this system was feasible for air taxi airplanes and that the safety advantage outweighed the weight and volume penalties associated with the system.

In the mid-1960s, efforts were under way to improve the crash resistance of integral fuel tanks without using bladder cells. The FAA sponsored a study to develop design improvements in transport airplane integral tanks to enhance fuel containment during survivable crashes [43]. The study determined that the most critical loading condition was concentrated impact along the front spar and lower surface as the airplane struck obstacles such as trees and poles. The most likely loading was due to distributed impacts, as in a wheels-up landing. However, any wing that could break trees could sustain severe ground contact loads. Reinforcements which would allow conventional structures to break poles consisted of strengthening the front spar rails and skin panels aft of the rails. Analyses showed that, if the reinforcing material were added primarily to the lower rail and lower surface, fuel containment would be efficiently improved for both the most critical and most likely crash conditions.

The analytical results were substantiated by an extensive test program with full-scale fuel tanks. The tanks were dropped onto obstacles simulating concentrated impacts and onto an inclined mound to simulate distributed impacts. The results of the study indicated that substantial improvements in fuel containment could be designed into wings similar to those currently used (circa 1960). The authors also stressed the need for fuel containment in the fuel lines, and stated that shutoff valves must be positioned so they are not torn off if the engine is torn off. They also recommended that the valves should automatically shut off if the engine was displaced. (The valves could be actuated by engine displacement or use of a quick-disconnect feature.)

Subsequent tests conducted by the FAA in the late 1960s on two DC-7 outer wing panels, which had been structurally reinforced, ended with mixed results [44]. The outer wing panel of one of the wings was strengthened chordwise with a 0.040-inch-thick aluminum doubler. The other wing panel had a 0.020-inch-thick aluminum doubler installed in a similar manner and also had chordwise aluminum tee sections extending from the front of the spar cap to slightly aft of the second spanwise stringer at 6-inch intervals. The wings were swung on a pendulum to impact a pole mounted with a shear pin to limit loads. Impact velocities of 27 mph resulted in G forces as high as 25. The first modified wing ruptured almost as much as an unmodified control wing. However, the wing reinforced with the tee sections did not rupture.

The FAA also conducted a study in this same time period to evaluate the crash resistance of a typical jet transport wing leading-edge fuel tank [45]. The primary purpose was to investigate a drop test method for testing wing leading edges. The wing was mounted vertically under the drop tower and the impact article was dropped, in a horizontal position, onto the wing leading edge. The impact article was accelerated up to the desired speed by a bungee cord. Obstacles used were pine logs, angle iron, and steel poles (pipe). Test results showed that failure of the leading edge occurred at approximately 93 mph with the log and 74 mph with the pipe. The researchers concluded that the test setup was an acceptable way to evaluate the strength of leading-edge fuel tanks without fuel in the tanks. The pipe was the best test obstacle because it was the most repeatable. The researchers proposed the following test criterion: the wing should withstand without cracking or rupture an impact of a 4-in.-diameter pipe with an impact velocity equal at least to one-half of the stall speed of the aircraft at maximum takeoff weight.

Alternate methods also were being investigated to improve the fuel containment capabilities of integral tanks during airplane crashes. The FAA conducted tests on F-86 droppable fuel tanks filled with 10 or 60 ppi reticulated polyurethane foam [44]. Some tanks were dropped onto a concrete pad at 32.5 mph. Other tanks were catapulted into a steel plate on a sloped earthen embankment at speeds of 80 mph in the presence of an open flame. The drop tests showed that the fuel spray patterns for tanks without foam and those with foam were similar relative to the depth of horizontal and vertical areas encompassed. Thus, the possibility of spray contacting an ignition source would be the same for both. The catapult tests showed that, in all configurations, fuel spray ignited within a time interval of 40 to 60 msec. Thus, the presence of the foam was considered quite insignificant to crash fire safety.

Additional concepts investigated were the use of elastomeric liners and curtains inside the fuel tank to maintain the integrity of the fuel tank during crashes, with the secondary purpose of reducing fuel flow if integrity was lost. Initial laboratory tests resulted in two feasible liners for integral fuel tanks: (1) a frangible bond/extendable film, which could drape wounds or encapsulate penetrating objects and (2) several inches of foam bonded to the inside of the tank wall to reduce flow through a puncture wound if integrity was lost [46]. Subsequent drop tests of these and other liner and curtain concepts showed that, if the liners or curtains were thin enough to conform to the damaged tank structure and seal the wound, they would be punctured. If they were strong enough to resist puncture, they would not conform to the structure and fuel would flow around them and out the wound [47]. The investigators concluded that no system dependent upon the continued support of the aircraft structure would be successful in eliminating or controlling postcrash fuel spills and these concepts were abandoned.

Research and development efforts for transport airplane CRFS technology languished during most of the 1970s as efforts were focused instead on improving the crash safety of general aviation airplanes, including the development of CRFS fuel systems for these aircraft. In 1973, NASA and the FAA began a 10-year joint study on the crash dynamics of general aviation airplanes under controlled, free-flight conditions [48 and 49]. The object of this program was to determine the dynamic response of airplane structures, seats, and occupants during a crash and to determine the effect of flight parameters at impact on loads and structural damage. Twenty-one full-scale, instrumented crash tests were conducted using a gantry structure and allowing the aircraft, suspended and guided by cables, to swing pendulum-style onto the impact surface (see

figure 2-8). Analysis of the test data resulted in representative floor deceleration pulses, which could be used for postcrash analysis and comparisons to human tolerance data, as well as establishing the parameters for the development of crash-resistant structures and improved seats and restraints.

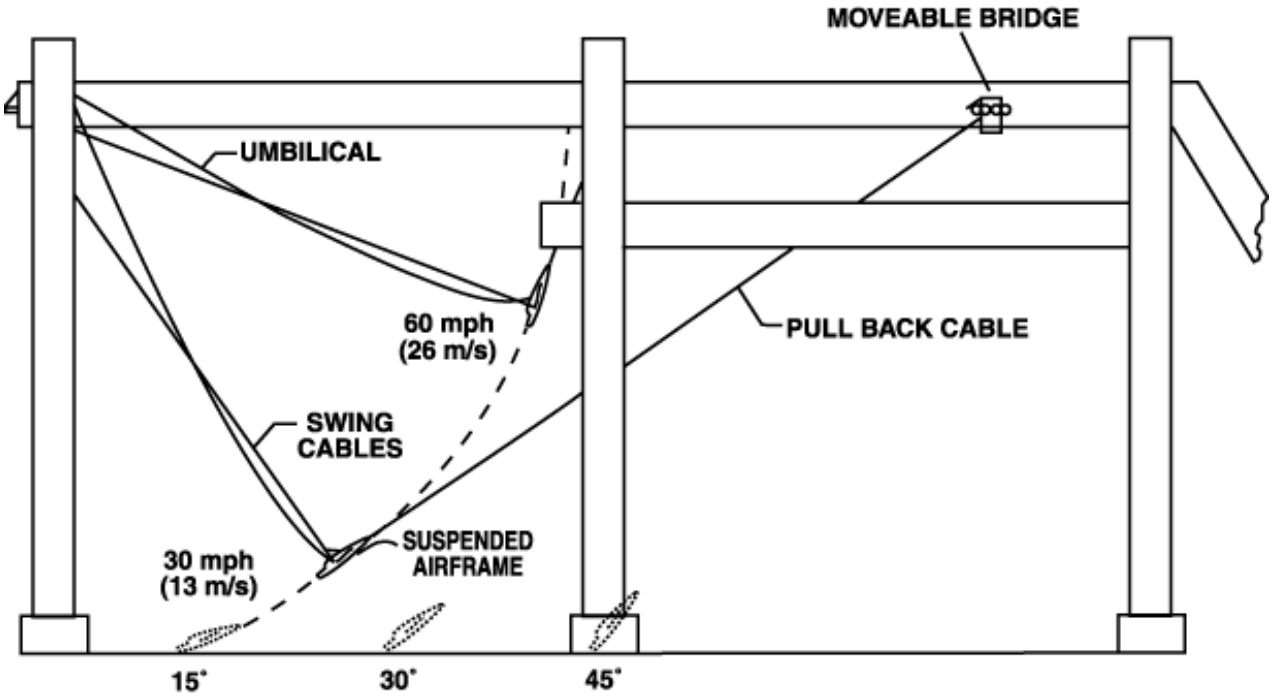

FIGURE 2-8. FULL-SCALE CRASH TEST METHOD

Concurrently with the crash tests described above, the FAA conducted four full-scale crash tests of light twin-engined airplanes with experimental CRFSs [50 and 51]. The tests were done to evaluate the performance of various light-weight, flexible, crash-resistant fuel cells with self-sealing breakaway valves installed in the fuel and vent line outlets. Since the fuel tanks would be located in the wings ahead of the main spar, they had to be lighter weight and more flexible than the MIL-T-27422B tanks, but tear and puncture resistance were still primary criteria. Five types of tank materials were used consisting of one to three plies of fabric with fabric weights from 5.50 to 12.75 oz/sq yd. A standard bladder tank was also used in one of the tests. The self-sealing breakaway valve installed in the fuel line outlet was activated by an actuating arm installed to impact the attached fuel line (aluminum tubing) as the airplane contacted the ground (see figure 2-9).

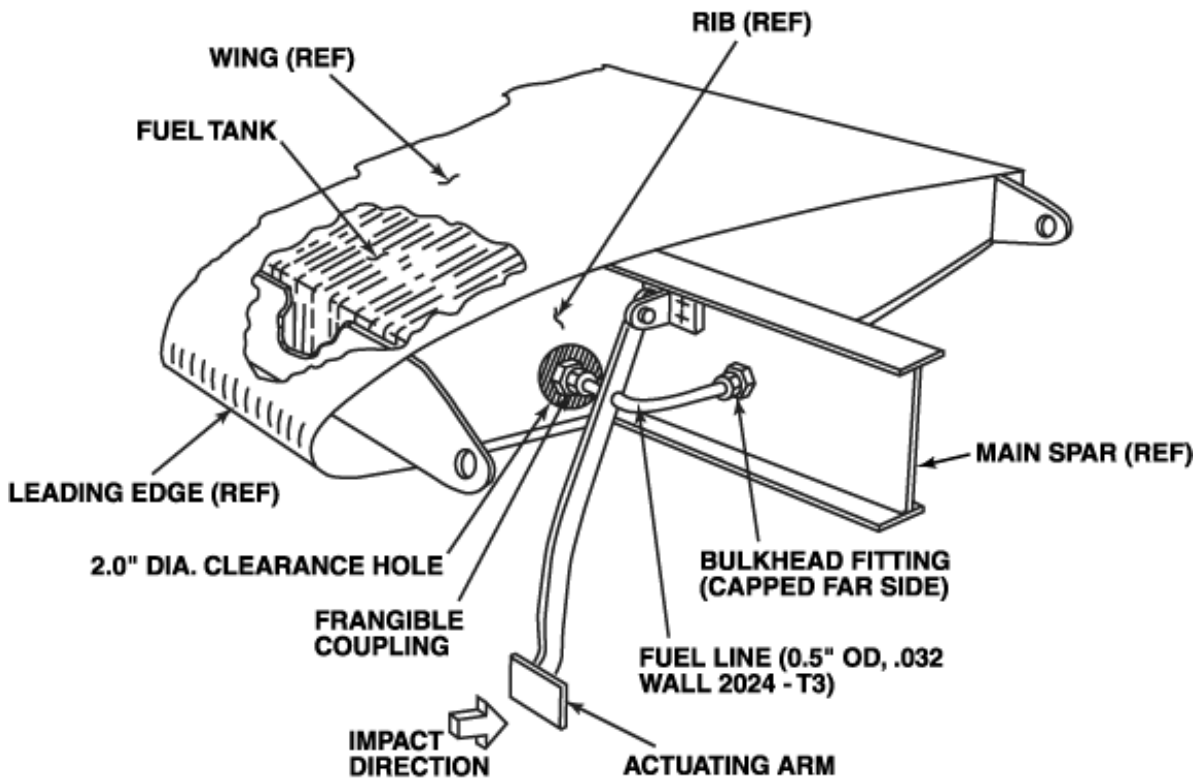

FIGURE 2-9. SELF-SEALING BREAKAWAY VALVE INSTALLATION (WING ROOT)

The tests were conducted on a catapult test track. After the airplane was accelerated up to speed, the landing gear was knocked off by an I-beam barrier. The airborne airplane then struck a 4° earthen embankment containing embedded steel poles to impact the wings (two on each side). Impact speeds ranged from 93 to 95 ft/sec.

The test results are shown in table 2-3. Both one-ply tanks made from fabric whose weight was less than 12.75 oz/sq yd failed. The original bladder tank failed catastrophically. There was no damage to the remaining tanks. The self-sealing breakaway valves performed satisfactorily in all of the tests. The authors cautioned that these tests with the light-weight tanks were not applicable to belly or nacelle tanks whose shape would not allow the tanks to increase in volume during impact, thus letting hydraulic pressure remain low. Nonetheless, the feasibility of designing increased crash resistance into the fuel systems of general aviation airplanes was firmly established.

TABLE 2-3. CRASH TEST DATA

Test No.	Fuel Tank L.H.	Fabric Weight (oz/sq.yd)	Fuel Tank R.H.	Fabric Weight (oz/sq. yd)	Aircraft Weight lb	Impact Speed, ft/sec	Maximum Acceleration (g)		Damage
1	2-Ply* US758	12.75	3-Ply US759	12.75	2,660	93	Fwd	Up	None to either tank
2	2-Pl;y US758	12.75	Original Aircraft Bladder Cell	--	2,660	93	15	5	None to either tank R.H. tank ruptured
3	2-Ply US758	12.75	1-Ply US764	12.75	2,598	95	29	7.5	None to either tank
4	1-Ply US768	5.50	1-Ply USA762	8.00	2,590	95	27	55	Both tanks failed; R.H. tank received minor damage

*This tank was previously drop tested from 39 ft.

In March 1985, the FAA issued ANPRM 85-7 to elicit comments on the FAA's intent to incorporate standards for crash-resistant fuel systems into 14 CFR Part 23. In response, the General Aviation Safety Panel (GASP), an industry-government group formed at the request of the FAA, addressed the feasibility of improving the crash resistance of general aviation airplane fuel systems. Although GASP felt that the installation of crash-resistant fuel tanks in place of existing metal tanks or integral tanks would not be feasible, it did recommend the use of self-sealing breakaway valves at the wing/fuselage, firewall/engine-mount, and tip tank/wing junctures and the dry-bay area behind an engine if used to carry fuel. GASP also recommended that any fuel tank located in an engine nacelle or any fuselage tank located between the engine and an area occupied by either pilots or passengers, or any fuel tank external to the wing's contour (excluding tip tanks), should comply with the requirements of MIL-T-27422B, with the exception of some lower requirements similar to those incorporated for the civil helicopter fuel tanks.

The FAA issued NPRM 85-7A for Crash-Resistant Fuel Systems in General Aviation Aircraft (14 CFR Part 23) in February 1990, which incorporated the GASP recommendations and also included placing bladders in wing-tip tanks and self-sealing breakaway valves between interconnected tanks. This proposed rule making was canceled by the FAA in December 1999 because "…. the costs of the proposed change are not justified by the potential benefits."

Efforts to develop CRFS components for transport category airplanes resumed following a public hearing by the FAA in June 1977. The hearing was held to obtain further information on a proposed requirement for the installation of an explosion prevention system for each fuel tank and fuel vapor and vent space to control postcrash fuel system fires and explosions. The public hearing confirmed previously submitted written information that fuel tank nitrogen inerting, foam filler, and chemical agent explosion suppression systems, although effective in preventing fire and explosion in undamaged fuel systems, cannot prevent external fires caused by fuel released from damaged fuel tanks under crash conditions [52].

It was suggested at this hearing that antimisting kerosene might reduce the fire hazard from fuel tanks damaged during a crash. Participants at the hearing also recommended that crash-resistant tanks and self-sealing breakaway valves be developed for fuselage fuel tanks and that breakaway valves be installed in the fuel lines between tanks and engines. As a result of this hearing, and a second hearing in November 1977 dealing with the fire worthiness of compartment interior materials, the FAA established the Special Aviation Fire and Explosion Reduction (SAFER) Advisory Committee on June 26,1978. The Committee was to "....examine the factors affecting the ability of the aircraft cabin occupant to survive in the postcrash environment and the range of solutions available."

The SAFER Committee was composed of 24 members in addition to the chairman and executive director. Airlines, manufacturers, universities, public and private sector research establishments, flight and cabin crews, and consumer organizations were all represented. The Committee met for the first time in May 1979 and, in view of the short term remaining (13 months), limited the scope of its activities to transport category aircraft and to aircraft design aspects relating to fire and explosion reduction in impact survivable accidents. To provide the detailed information needed by the Committee, two technical working groups were organized; one on compartment interior materials and one on postcrash fuel system fire hazard reduction. These working groups also employed specialist subgroups to provide additional expertise in each area. The subgroups in the fuel system fire hazard reduction group were (1) explosion suppression, fuel tank foam/foil, and fuel tank inerting; (2) crash-resistant fuel tanks; and (3) antimisting fuels.

The SAFER Committee released its final report in June 1980 [53]. The Committee found that the major hazard in postcrash aircraft fires is the aircraft fuel system. Ignition of aircraft fuel spilled due to structural breakup during a crash is the primary cause of nearly all aircraft postcrash fires. Technical committee findings and recommendations for fuel system fire hazard reduction were as follows:

(1) Explosion suppression, etc. The Committee concluded that these systems would be effective only in those cases of minor damage (no major fuel tank rupture) where external fire would be far less severe. In such circumstances, equivalent protection could be provided by a flame arrestor in the fuel tank vent line and by a system that ensures that the engine fuel supply is shut off in potential fire situations. Both suggested improvements were based on existing technology.

(2) Crash-resistant fuel tanks. The Committee concluded that it is feasible to install crash-resistant fuel cells in the fuselage and that it may be feasible to incorporate some degree of crash resistance in critical wing fuel tank locations. However, it is not feasible, in most conventional transport airplanes, to install crash-resistant fuel tanks in the wings.

(3) The Committee felt that antimisting fuels held the most promise for reducing the fuel fire hazard, although more development and testing was needed before feasibility could be established.

Two additional Committee recommendations were made that are very pertinent to reducing the fuel fire hazard. One was to develop realistic airplane crash scenarios with emphasis on crash-

induced fuel system failure modes and their effects on postcrash fire safety. Fuel system design criteria and regulations could then be developed using the crash scenarios as a basis. The second recommendation was that the FAA and NTSB jointly improve and standardize postcrash accident investigations with added emphasis on identifying the role of design features that affect the development and spread of postcrash fires. Features that contribute to fire safety as well as those that contribute to fire hazards should be identified. (This topic is discussed in more detail in section 4.) The SAFER Committee also pointed out that the differing definitions of "impact-survivable" accidents complicate CRFS design for transport airplanes, but offered no alternative definition.

Note: The basic tenet of CRFS design is to produce a fuel system which will contain its fuel (or minimize spillage) in accidents up to the limits of human survivability. The U.S. Army and the NTSB both define a "survivable accident" as one in which an occupiable space is maintained around the occupant and impact forces transmitted to the restrained occupant do not exceed human tolerance limits. The FAA, on the other hand, has historically defined survivable accident as one in which at least one occupant survives the impact.* Neither of these definitions is acceptable for transport airplane design purposes.

The U.S. Army definition has been used quite successfully for many years as a basis for crashworthy design. This is possible because of the relatively small size of helicopters (and small, general aviation airplanes) which ensures that the aircraft as a whole, and the occupants therein, experience comparable forces during an impact. In transport airplanes, however, the large size of the aircraft allows different sections of the aircraft (and their occupants) to experience dissimilar forces during a crash, sometimes by an order of magnitude or more. Therefore, the question arises as to what part of the airplane the survivable definition should be applied to – the fuel tank area or areas away from the fuel tank which may experience lower crash loads?

On the other hand, the FAA definition of survivable crash is based on the outcome of the accident, which furnishes no basis at all from which the designer may work. Outcomes are often unpredictable and undefined for the accident population as a whole. Without defining some predictable limits, a sound engineering basis for design is impossible.

Defining realistic upper limit crash scenarios based on accident data would be a logical beginning. Fuselage section and full-scale airplane crash testing to these scenarios could then furnish the necessary data upon which crashworthy designs could be based.

The recommendation by the SAFER Committee to develop realistic crash scenarios resulted in the FAA awarding contracts to three major domestic transport airplane manufacturers in 1980 to examine transport accident data in depth and to develop candidate impact-survivable accident scenarios for use in future crashworthiness R&D efforts [52]. The results of these studies were published in 1982 and are discussed in detail in section 4. Based on these studies, three distinct scenarios with associated impact conditions were suggested, as shown in table 2-4 [54].

* Proposed AC25-17A contains a definition of survivable crash which is a modified version of the U.S. Army and NTSB definition, see section 8.3.4.3.

TABLE 2-4. TRANSPORT AIRCRAFT CANDIDATE SCENARIOS

		IMPACT CONDITIONS					
Candidate Scenario	Operational Phase	Distance From Airport	Forward Velocity (Vf)	Sink Rate (Vs)	Airplane Configuration/ Impact Conditions	Terrain	Hazard
Ground to Ground (overrun)	Takeoff abort/landing overrun	On runway or within 3000 ft. of end of runway	60-100 kts	Less than or equal to 5 fps.	Gear extended Symmetrical	Runway Hard Ground	Ditches Trees Mounds Light Stanchions
Air to Ground (Hard Landing)	Landing-hard Landing-undershoot	On runway or within 300 ft. of threshold	126-160 kts	Greater than 5 fps. but less than or equal to 12 fps	Gear extended Symmetrical	Runway Soft Ground	None
Air to Ground (Impact)	Final Approach	On runway or between outer marker and missed approach point	Greater than 126 kts	Greater than 12 fps	Gear extended retracted Symmetrical Unsymmetrical Pitch 0º - 5º Roll 5º - 45º Yaw 0º - 10º Flight Path -4º - -7º	Hard Ground Hilly Rocky	Trees Poles Slopes Ravines Buildings

The studies concluded that the greatest potential for improved transport crashworthiness was in reducing fire-related fatalities (severe fuel fires accounted for approximately 36 percent of the fatalities in survivable accidents). Leading candidates for crash-resistant improvements were the structural integrity of fuel systems and fuselages and landing gear that are more tolerant of off-runway conditions.

Also, in view of the SAFER Committee report, the FAA accelerated its existing program on antimisting kerosene (AMK). Following intensive investigations, including full-scale ground and flight tests, a B-720 airplane operating on AMK was flown remotely in a controlled impact test to demonstrate the effectiveness of AMK in an impact-survivable accident. (This program is described in section 2.4.) However, the demonstration indicated that control of the fuel fire with AMK was not yet feasible.

Therefore, in 1985, the FAA awarded a contract to a major domestic airplane manufacturer to identify potential fuel containment concepts for reducing the postcrash fire hazard in the crash scenarios previously identified. During this program, an analysis of available crash test data and accident data allowed the researchers to develop the cause and effect relationships shown in

figure 2-10 [55]. Based on this data, several approaches were formulated to improve fuel containment during survivable crashes. These were:

- Approach No. 1 - Component Improvements

  Crash-resistant fuel system components

  Self-sealing breakaway valves (potential use in engine fuel feed line at pylon)

  Frangible fittings

  Flexible lines (used now where there is a high stretch potential and where relative displacement is anticipated)

  SAFER Committee recommendations

  Vent flame arrestor
  Emergency shutoff valves

- Approach No. 2 - Wing Structural Modifications

  Wing span changes (front spar, leading edge, lower skin, forward skin redesign, and strengthening similar to reference 43)

  Wing root changes

  Increased strength

  Double wall construction

  Spanwise compartmentation of tanks (would need self-sealing fittings at cell-to-cell lines and wing root)

  Energy absorbing devices

- Approach No. 3 - Fuselage Fuel Containment

  Crash-resistant fuel tank material
  Crash-resistant fuel system components

The above concepts were analyzed regarding benefits and penalties and prioritized in order of effectiveness based on the ratio of fleet penalty (weight plus cost) to fatality reduction. The author concluded that fuselage fuel containment (Approach No. 3) rated highest and had the greatest near-term potential. Wing structural modifications would be long-term goals, but fuselage fuel containment, along with wing root structural modifications, would ultimately be the most effective approach. The least effective was structural modification of the wing span.

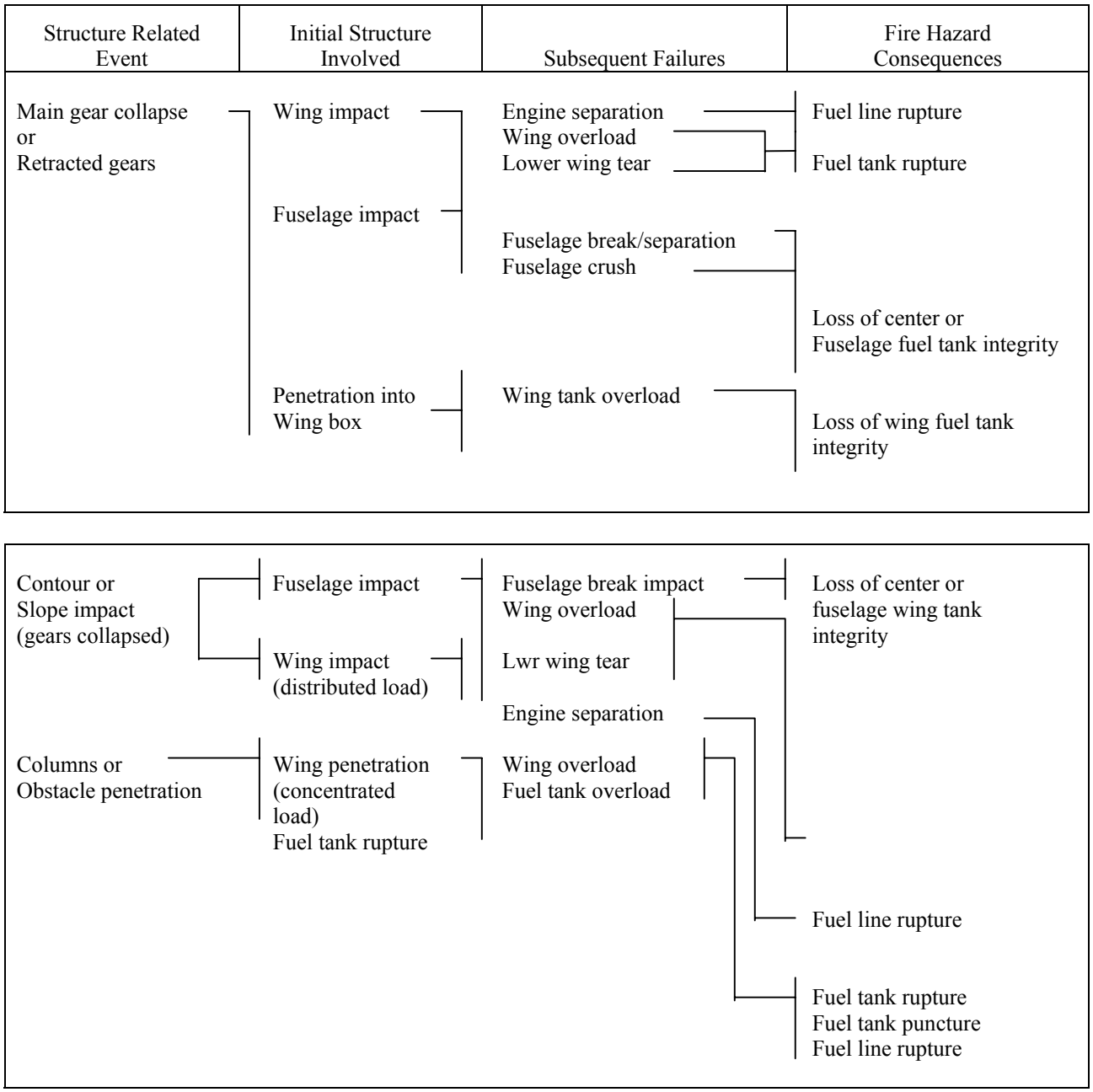

FIGURE 2-10. ACCIDENT EVENTS WHICH LEAD TO A FIRE HAZARD

The study determined that design practices for fuselage fuel tanks could be separated into two distinct categories. One category consisted of using bladder cells in the lower fuselage of wide-body transports between the front and rear spars of the wing carry-through structure (see figure 2-11). This installation avoids sections where the fuselage is likely to break during a crash. The surrounding beams and bulkheads provide stiffness and support in event of a gear-up impact with the ground. The fuel system components are located within the cell, protecting them to a certain extent. The author recommended that a more tear- and crash-resistant bladder be used to improve the tank's crash resistance. In addition, energy absorbing crushable structure (i.e.,

sandwich construction or equivalent) should be used between the tank cell and lower fuselage skin.

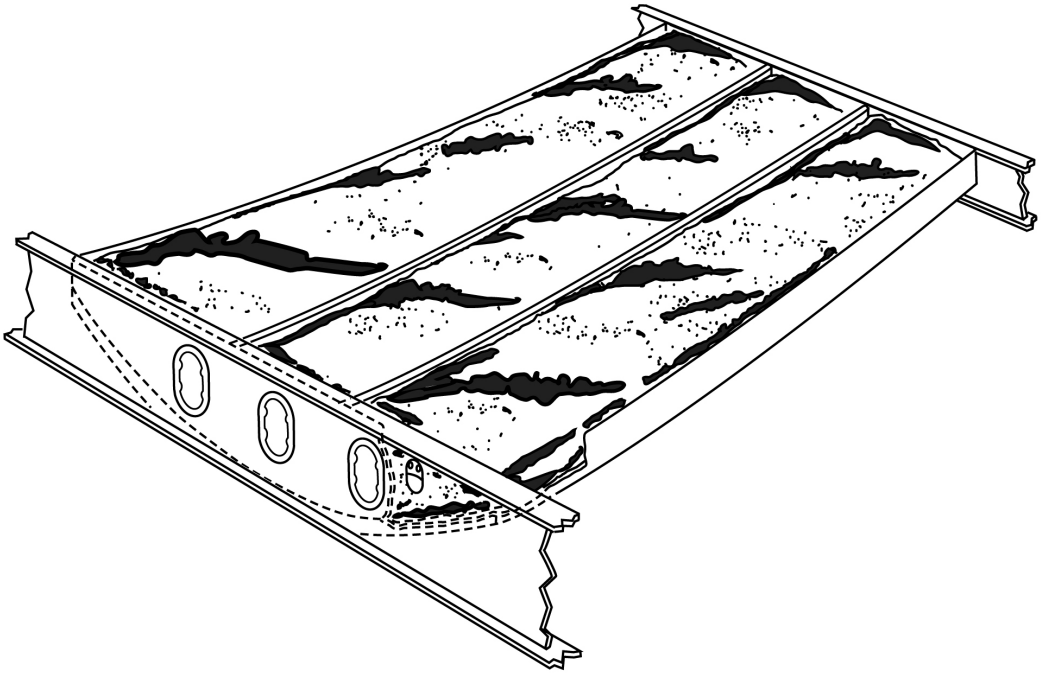

FIGURE 2-11. BLADDER CELL INSTALLATION WIDE-BODY TRANSPORT AIRPLANE

The other category of fuselage fuel tank in use consisted of a bladder within a dedicated structural box. This type of tank is used in both narrow- and wide-body airplanes. It is generally located in the lower fuselage cargo compartment. The tank is composed of an aluminum honeycomb outer shell with two bladder cells inside. It is supported from the passenger floor beams and fuselage frame as shown in figure 2-12. This design allows for tank displacement relative to aircraft structure and affords some available crush distance above the bottom fuselage skin. The fuel and vent lines connecting the auxiliary tanks to the main fuel system incorporate drainable and vented shrouds. In addition, these lines are either designed to break away from the auxiliary tank or sufficient stretch is provided to accommodate tank movement without causing fuel spillage. The author recommended using more tear-resistant bladders and self-sealing breakaway valves in the lines to make the tanks more crash resistant.

Analytical studies (done by the KRASH computer program) also were conducted during this program. The analysis was based on air-to-ground and ground-to-ground fuselage impacts with no obstacles [55]. These studies showed that initial sink velocities in excess of 22 ft/sec with zero pitch would likely break the fuselage shell and crush the fuselage underside 14 to 24 inches.

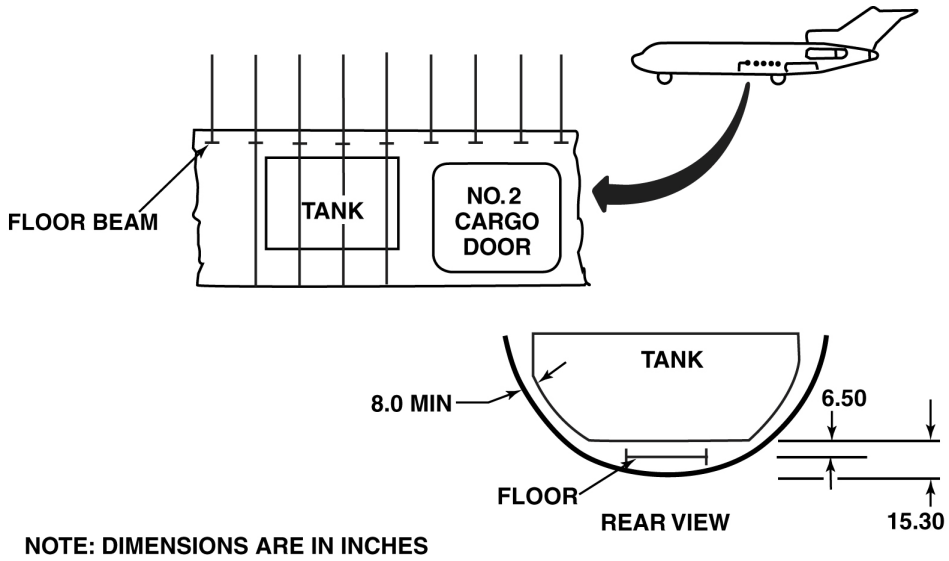

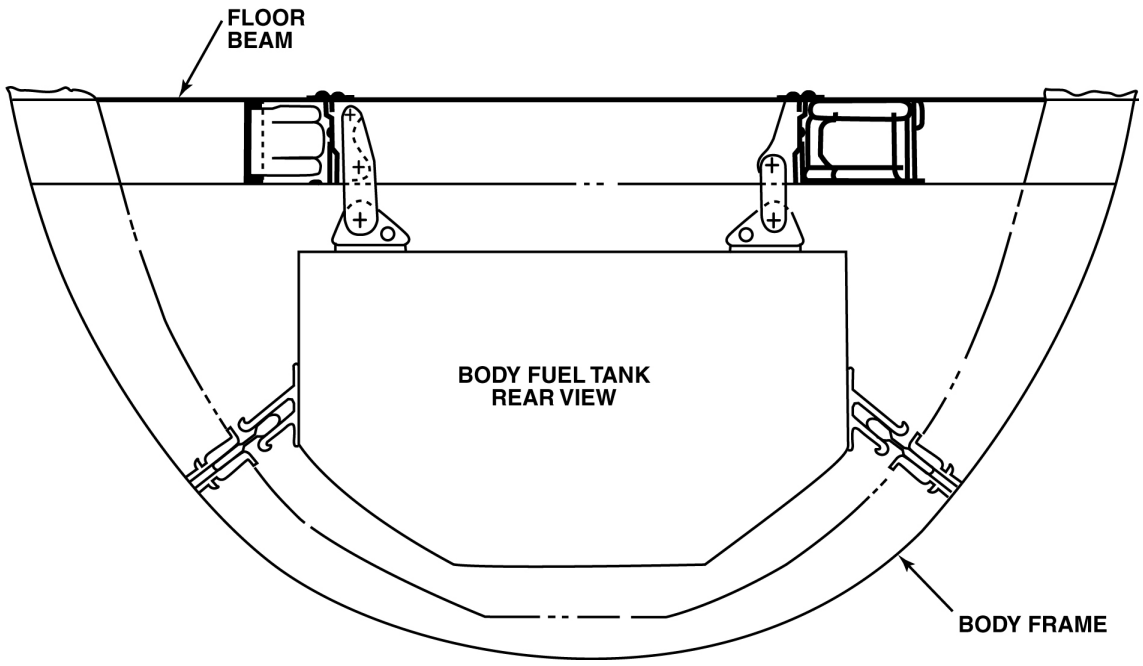

FIGURE 2-12. FUSELAGE FUEL TANK GENERAL ARRANGEMENT AND ATTACHMENT

The researchers suggest the velocity envelope depicted in figure 2-13 be used for crash design purposes because the airframe should not break up within this envelope and, thus, could be considered survivable.

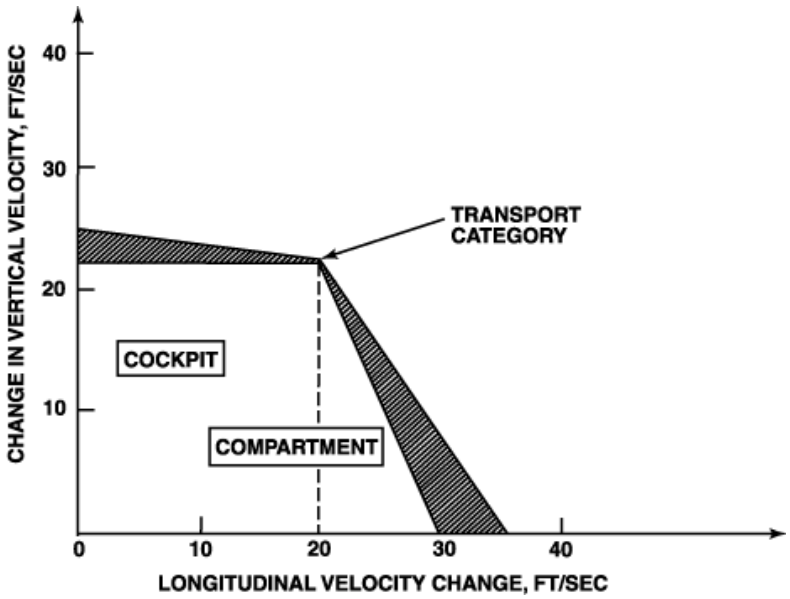

FIGURE 2-13. SUGGESTED VELOCITY ENVELOPE FOR STRUCTURAL INTEGRITY BASED ON PRELIMINARY KRASH STUDIES

A follow-on study conducted by the same manufacturer was performed to evaluate the performance under crash conditions of three contemporary fuselage fuel tank installations [56]. These installations were the two described previously plus a relatively small (160 to 440 gal) double-wall, cylindrical strap-in tank. These cylindrical tanks are generally located in an area where adequate fuselage crush is anticipated and away from break/separation regions. The author recommends relocating the interconnecting lines from below the tanks and external to above the tanks and internal, where possible, to improve their crash resistance. Also recommended is the use of flexible lines and breakaway fittings, as well as redundant support structure to prevent the tanks from breaking free.

The KRASH computer program was used to develop anticipated fuselage responses during a crash. The crash conditions did not include any obstacle impacts either to the fuselage or to the wings. The KRASH analysis was used to generate a proposed crash design velocity envelope for floor-mounted components. The potential criteria were:

- Dynamic Pulse (Triangular Shape)

Vertical - only

Velocity change, Δv	= 25 ft/sec
Rise time, t_r	= 0.075 sec
Peak acceleration	= 10.4 g

Longitudinal - only

Velocity change, $\Delta\Delta v$	= 30 ft/sec
Rise time, t_r	= 0.10 - 0.09 sec
Peak acceleration	= 9.3 - 10.2 g

The fuselage underside crush distribution, based on both test and analysis data, was:

- Forward of wing section 14 inches
- Wing center section 10 inches
- Aft of wing section 16 inches

A series of tests to evaluate various fuel tank installations and crash-resistant components was proposed. Two types of section tests were proposed to assess the performance of fuselage fuel tank installations; a longitudinal impact and a vertical impact with accelerations and velocity changes within the envelopes recommended above.

Note: While these tests might be a reasonable starting point for evaluating the performance of the tank structure and installation hardware under dynamic loads, it should be noted that these tests simulate only one of the three crash scenarios of survivable accidents, the other two scenarios involving impacts into obstacles or uneven ground. In addition, there are many instances in the accident records where occupants have survived crashes in which the fuselage has broken apart and, in fact, where occupants have used these breaks as emergency exits. Thus, although the recommended test parameters might be sufficient for occupants near the fuel tanks, occupants farther away from the tank location might see considerably lower forces. If the tank were to fail only slightly above the test conditions, many occupants still might be put at risk of fire injuries or death during otherwise survivable crashes.

In the early 1980s, NASA and the FAA each conducted several drop tests of transport airplane fuselages to acquire structural response data for computer programs such as DYCAST and KRASH, which were being developed for crash analysis of aircraft structures. The FAA expanded its test program during the 1990s to include seats, overhead bins, and fuselage fuel tanks. These tests are described in section 3.

2.4 MODIFIED FUEL.

Aircraft crash testing following World War II (WWII) showed that ruptured fuel tanks dump large quantities of jet fuel into the air stream before the airplane comes to rest. The fuel is sheared into fine mist as it travels through the air. The mist is explosively flammable, susceptible to ignition by sparks, hot engine parts, electrical arcing, and other conditions that occur coincident to the crash sequence. Once the mist is ignited, the flame front propagates explosively back to the point where the fuel was released and a large fire can rapidly consume the airplane before passengers can escape.

Those concerned with accident injury prevention concluded early on that mitigation of the postcrash fuel misting phenomenon could be a key to reducing the number and severity of postcrash fires and their resulting carnage.

2.4.1 Antimisting Kerosene.

Decreasing the susceptibility of aviation kerosene fuel to atomizing (misting) soon became recognized as the most readily feasible methodology to reduce fuel misting. Thickening or

gelling known fuels could be employed to reduce their susceptibility to flowing after tanks and lines were breached. By making the thicker fuels cohesive, they would be less likely to atomize during the immediate postcrash spillage, and later spills would be minimized by the resistance of the fuels to flow readily.

The U.S. Army and the FAA began conducting research into gelled and emulsified fuels in the mid-1960s in hopes that they could find a means for reducing the number of injuries and deaths caused by postcrash fires. The U.S. Army's research, the more extensive of the two, was an attempt to evaluate fuel emulsification in dynamic crash conditions. The U.S. Army testing progressed from laboratory experiments through 60 full-scale fuel cell impact tests, which demonstrated that the emulsified kerosene fuels (JP-8 and Jet-A) significantly reduced fire hazards in the postcrash environment [57].

Although the U.S. Army's experiments achieved encouraging results in laboratory settings dealing solely with the characteristics of the fuels, the emulsified fuel burned profusely when crash tested in three T-33 jet trainers. These early failures opened the door to much more complex research designed to develop utilitarian methodologies for using a modified fuel in aircraft during real-world operating conditions.

In 1978, the FAA entered into a cooperative effort with the United Kingdom's (UK) Royal Aeronautical Establishment (RAE) and NASA to investigate the feasibility of achieving the transition of AMK from the laboratory to regular aircraft operations. In corollary inquiry the SAFER Technical Group on Postcrash Fire Hazard Reduction studied AMK progress to date and concluded that:

> "Although it appears to be the most promising candidate to reduce the fire hazard in a post-crash environment, much more development effort will be required before this potential can be realized" [53].

At the time (1979), the antimisting additive under study was FM-9™, a proprietary material produced by Imperial Chemical Industries (ICI) in the UK. The cooperative U.S./UK agreement encompassed research in both countries until the end of 1980, at which time a decision would be made either to continue development or abandon the concept as unworkable. The SAFER Anti-Misting Kerosene Sub-Committee identified several factors critical to AMK's transition to operational usage:

- Fundamental properties of the AMK/FM-9™ mixture and acceptable variances
- "Degradation" or "restoration": return of the AMK fuel mixture to its base fuel state
- AMK production, quality control, and stability
- Effects of water on AMK
- Effects of AMK on engines and engine components
- Actual fuel-air shear (anti-misting) experiments testing fuel release rates and airspeeds
- Large-scale crash tests to determine performance in actual airplane crash conditions

The Sub-Committee concluded that:

> "The use of AMK will significantly reduce the fire and explosion hazard in a survivable accident by significantly reducing the propagation of flame through fuel mists such as might occur during an aircraft crash" [53].

The Sub-Committee recommended that research continue beyond 1980, the terminal date of the FAA/UK agreement, especially into those areas noted above where robust scientific data were lacking.

In September 1980, the FAA initiated an Engineering and Development Program Plan on Antimisting Fuel. Later revised in 1985 after the Controlled Impact Demonstration (CID), the plan set up a phased research program to:

- Determine the feasibility of antimisting fuel;
- Develop recommendations for introduction and use in civil aviation;
- Assess its effectiveness in a controlled impact demonstration; and
- Assess its economic reasonableness in support of regulatory actions [58].

2.4.2 The Controlled Impact Demonstration.

The CID was designed to demonstrate that (1) a jet transport airplane could operate solely on AMK; and (2) in a representative crash scenario, the AMK would prevent an airborne fuel mist from forming to support an explosive conflagration and limit the airborne fireball that had proved so deadly in past crashes. The Boeing-720 CID airplane was to be remotely piloted and crashed onto a prepared impact site in a scenario that would result in a "survivable" accident. It would be representative of typical takeoff, approach, landing, or missed approach accident.

The impact scenario had the airplane on a 3.3º to 4.0º glide path with a 1º nose-up attitude on its final approach. With a sink rate of about 17 fps and neither roll nor yaw, it would hit the ground at 145-155 kt ground speed. The crash severity of the scenario would be within the survivable range. The landing gear would be retracted to increase fuselage impact forces. The impact site had been prepared with a packed stone bed to provide a friction ignition source over which the airplane would slide. Eight heavy steel structures were imbedded in concrete within the impact site, aligned to rip open the wing fuel tanks and guarantee fuel spillage. Operating approach lights were mounted in the slideout area to serve as electrical sources of ignition. Two jet-fueled flame generators were installed in the 720's tail cone to imitate the ignition potential of aft-mounted engines and ensure ignition as the airplane slid through the spilled fuel in the event all other ignition sources failed.

There were 73 dummies stationed within the cabin, of which 13 were fully anthropomorphic. The 13 were fitted with accelerometers in the head, thorax, and pelvis to measure impact and postimpact forces transmitted to "passengers." Additional force sensors (175) were installed in the wings, fuselage, galley, floor, and overhead storage compartment. Sensor data were recorded both onboard the plane and telemetered to external recorders.

The B-720 was also equipped with 11 high-speed motion picture and video cameras inside the cabin, one high-speed movie camera on top of the vertical stabilizer, and two video cameras and a movie camera in the nose. About a hundred cameras were positioned around the crash site. The memorializing crew was rounded out by two photo helicopters and a U.S. Navy photo reconnaissance plane equipped with long-range, high-speed cameras.

In December 1984, the CID B-720 took off from Edwards AFB, CA, loaded with 11,325 gallons of inline blended AMK. Winds were less than 5 kts. The plane intercepted its final approach path at 2300' above ground level (agl) and began descent. At the 150' agl abort decision altitude, it was on its 150 kt ground speed, but slightly below glide slope and to the right of final approach course. As the remote pilot attempted to correct the flight path, the left outboard (#1) engine struck the ground 410 feet short of the target box. The plane was in a 2º nose-down attitude, yawed 13º left. It immediately rolled about 10º left wing down, and the left inboard (#2) engine and fuselage struck the ground immediately thereafter. Both left engines spooled down to cutoff and separated at the pylons within two seconds, prior to reaching the wing-cutters. By then, its ground speed had slowed from 152 to 122 kts. It slid 500 feet before hitting the first of the eight steel wing-cutters at a 38º yaw angle.

By the time the plane contacted the first wing-cutter, the swept leading edge of its right wing was almost perpendicular to the centerline of the impact zone, and both right engines (#3 and #4) were still running. The first wing-cutter entered the right side of the #3 engine nacelle and continued through the engine, stopping the compressor within one revolution. The cutter broke loose from its anchoring and rotated upwards under the wing, cutting into the inboard main fuel tank. Simultaneously, the second right-hand cutter ripped into the bottom of the wing, inboard of the #3 engine, causing sufficient additional damage to separate the right wing.

The severed wing rotated forward ahead of the sliding airplane, releasing its fuel into an area of turbulence and recirculation that undoubtedly sheared the AMK, potentially degrading it to its previous Jet-A flammability characteristic. Rupture of the engines released AMK which had been restored prior to injection into the engines, as well as oil and hydraulic fluid. Ignition occurred within 0.14 second of the wing-cutter puncturing the engine and tank and resulted in an initial fireball that seemed to have all the characteristics of traditional fuel mist explosions.

Because of its dependence on idiosyncratic rigidity, the CID scenario departed drastically from a "representative" crash. To assure that the CID would demonstrate what its sponsors desired to display, the impact area was designed to achieve predetermined rupture of the plane's fuel cells and preplanned spillage precisely where it would be kindled by the prepositioned ignition sources. Those outcomes depended on the B-720 striking the ground precisely within a small 50- x 200-ft landing area. As each physical obligation was added to the scenario, the likelihood of achieving every planned outcome diminished inversely.

The FAA, NASA, and ICI were all convinced of the efficacy of AMK prior to the CID. They thought of the CID not as a test, but as a performance for the public with extensive press coverage. Unfortunately, the performance got out of control. The plane landed outside the planned envelope and the demonstration reverted to an experiment in which the outcome was no longer predictable.

Plane crashes seldom go according to plan. AMK had already been proved to be safer than ordinary jet fuel under a variety of crash circumstances. In retrospect, it would have been appropriate to demonstrate the effectiveness of AMK in a more typical crash scenario, rather than in the contrived environment attempted by the sponsors. Indeed, it is worthwhile contemplating the results of the CID had the heavy steel "cutters" been absent from the landing area, even with the same off-target landing.

Ironically, it was precisely the by-products of public demonstration that led to the perception that the CID was a failure. Television coverage transmitted instantaneous images that the controlled crash had turned into a massive uncontrolled fuel-fed fire. Images of the fireball and plumes of black smoke gave the impression of disaster in the desert. If the public had held any hope for AMK's minimizing the extent of postcrash fuel fires, it was dashed by those depictions.

Yet the opposite was true. Despite the visual imagery, the initial fireball did not penetrate the fuselage. Later analyses showed that AMK splashing over the fuselage actually cooled it and helped prevent burn through. The initial fireball went out in 8 to 9 seconds, leaving substantial time for survivors of the initial impact to have escaped before the subsequent fuselage fire erupted. And that fire penetrated the fuselage primarily at breaches opened by the misaligned cutters which had been emplaced to rip open the fuel tanks. Although the conventional wisdom argues that similar structures would not often be found in a crash site, in at least two recent accidents the fuselage was penetrated and the fuel tanks breached by external mechanisms not wholly unlike the CID's wing-cutters: the USAir 1493 B-737/Wings West Swearingen Metro at Los Angeles International (LAX), and AAL 1420's MD-80 at Little Rock (LIT).

The CID fires were not attacked by the firefighting means normally associated with FAR 139 air carrier airports. The secondary fire finally burned itself out after 1 1/2 hours. A final testament to the efficacy of AMK's reduced flammability was 9,000 gallons of unburnt fuel which remained in and around the airplane.

What might have been the case had the CID gone according to plan? In their book *The Golem at Large*, Harry Collins and Trevor Pinch commented:

> "We can easily imagine the demonstration going according to plan, the Boeing 720 landing wheels-up without bursting into flames, and the TV cameras entering the fuselage of the unburnt aircraft and revealing pictures of putatively smiling unscorched dummies. Yet that scene too hides some hidden questions. Could it be that the particular crash was unusually benign so that AMK has the potential to make a difference on only very few crashes? Could it be that the extra machinery needed to turn jelly-like fuel into liquid before it enters the engines of jet planes would itself be a cause of crashes? Could it be that the transition period, requiring two types of fuel to be available for two types of plane, would be so hazardous as to cost more lives than the new fuel would ever save? Could it be that the extra cost of re-equipping airlines, airports, and airplanes, might jeopardize safety in other ways at a time of ruthless competition in the airline market? Again, perhaps there was too little time for anyone to escape between first and second fires; perhaps cabin temperatures rose so much during the first fireball that everyone would have been killed anyway

> (authors' note: absence of suitable temperature and toxic byproduct recording devices was an obvious omission in CID planning); perhaps there is always unburnt fuel left after a major crash; perhaps everyone would have died of fright" [59].

While the CID remains a topic of considerable debate, and while speculation is unending about what might have occurred if the demonstration had proceeded according to plan, the practical result of the CID was that serious interest in pursuing the use of AMK or other antimisting fuels disappeared. That result is the ultimate tragedy of the CID. The likelihood of being able to design a cost-effective CRFS for large transport aircraft that will protect *all* occupants in *all* locations within the aircraft from postcrash fire injuries and death is remote [60]. The aircraft fuel systems are so complex, their components are distributed in so many locations in the aircraft, and the crash loads experienced by various portions of the aircraft are so diverse that it is highly unlikely that there will never be an unsafe spillage of fuel. For those reasons, the best single contribution to eliminating postcrash fires would be the development of a fuel that is hard to spill, and if spilled is extremely difficult to ignite outside the engine, and if ignited would incorporate self-extinguishing characteristics. Research should be reinstituted on developing such a fuel.

3. TRANSPORT CATEGORY AIRPLANE CRASH TESTS.

3.1 TEST DESCRIPTIONS.

Many full-scale crash tests of transport category airplanes were conducted during the early efforts to define the postcrash fire problem and find solutions that would prevent or minimize crash fires. These tests, which have been described in section 2, were conducted using airplanes designed and constructed before the advent of modern jet transports. The FAA's Controlled Impact Demonstration (CID) test utilizing AMK is the only full-scale, forward-moving crash test of a transport category airplane conducted since the 1960s. (Because of the unique nature and complexity of the CID, it has been described by itself in section 2.4.2.) However, the drop tests and sled tests described in this section were all conducted using contemporary transport airplane fuselages, thus yielding data that is directly applicable to current aircraft.

Two vertical drop tests of Boeing 707 fuselage sections were conducted by NASA in the early 1980s. These tests were conducted to acquire structural response data to corroborate the DYCAST computer program and to determine structural, seat and occupant response to vertical loads to prepare for the upcoming CID test. The test sections included some passenger seats with instrumented dummies but no fuel system components.

The first test utilized a 12-ft-long fuselage section located just forward of the wing [61]. The vertical test velocity was 20 ft/sec. The lower fuselage section (baggage compartment) collapsed inward near the section centerline approximately 2 feet. This collapse was caused by bending failures on both sides of the fuselage at one-third of the vertical height between the fuselage bottom and floor, as shown in figure 3-1. The maximum vertical acceleration at the bottom of the fuselage was 20 G's while that at floor level it was only 12 G's because of the crushing of the under floor structure.

As can be seen in figure 3-1, the section is open on both ends. As the researchers who conducted the test pointed out, the crash response of a fuselage section would depend upon the transmission of forces and moments of inertia from the rest of the structure. They felt this interaction would be very difficult to simulate and, therefore, used a very simple tension cable system to provide outward radial restraint only. It is unclear how much this configuration might affect the magnitude of the results.

The second drop test utilized a 13-ft-long section located at the rear of the wing. This center section included the wheel wells, keel beam, and part of the rear wing spar, as shown in figure 3-2 [62]. Test velocity also was 20 ft/sec. There was no damage to the fuselage or floor. Maximum acceleration on the fuselage bottom equaled 71 G's. The extremely stiff structure transmitted high loads to the floor, seats, and dummies in contrast to the lower loads transmitted by the softer structure ahead of the wing.

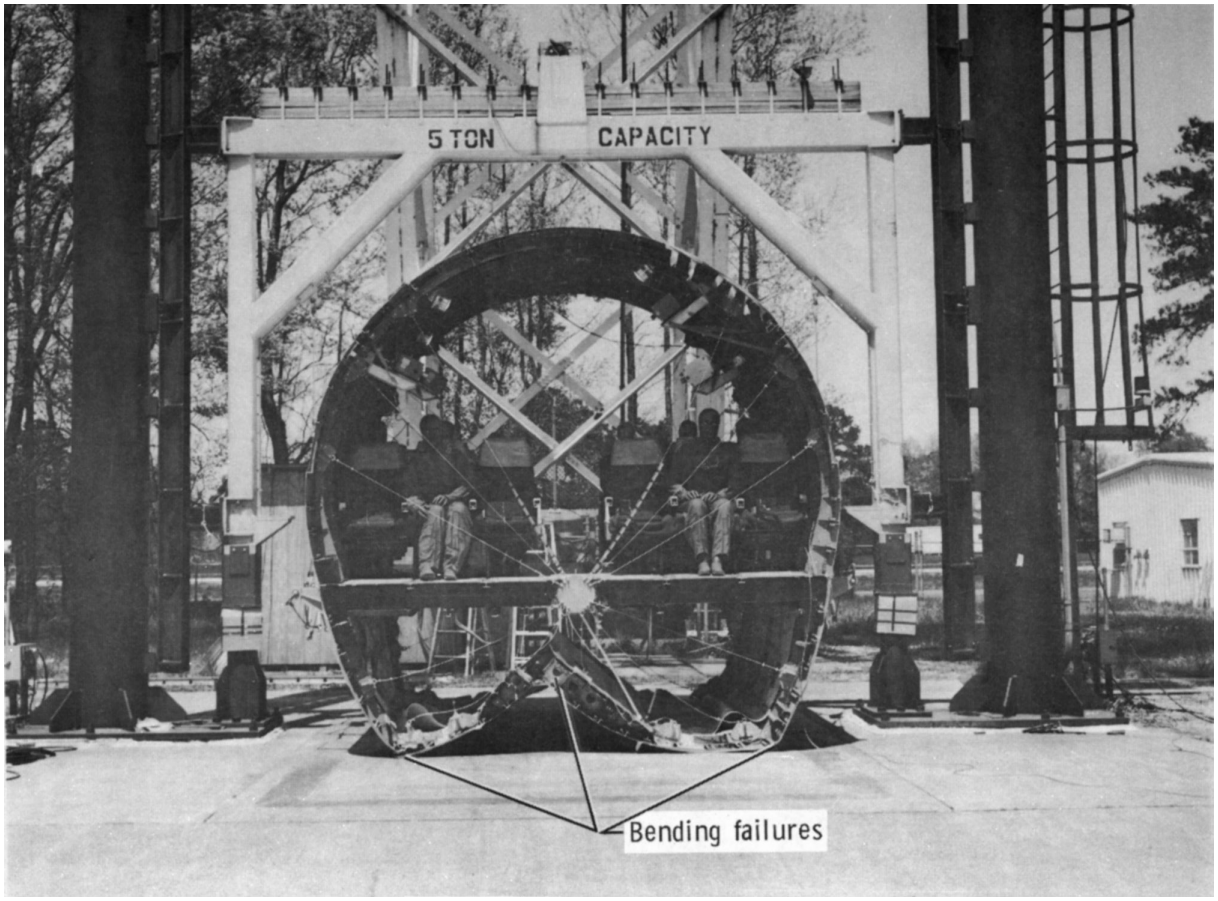

FIGURE 3-1. POSTTEST, FRONTAL VIEW OF TRANSPORT SECTION FORWARD OF WING

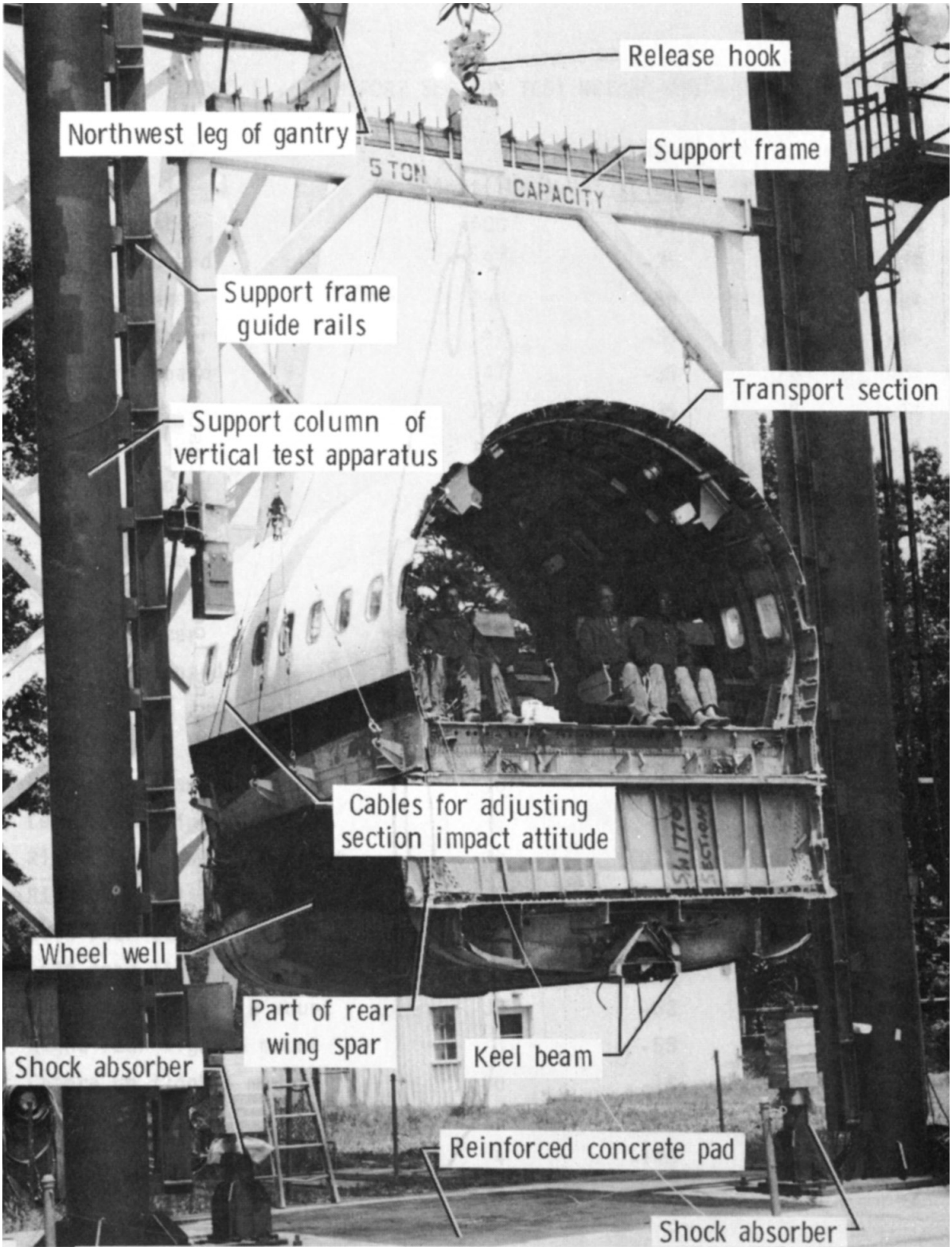

FIGURE 3-2. TRANSPORT CENTER SECTION SUSPENDED IN VERTICAL TEST APPARATUS

A third drop test of a B-707 fuselage section was conducted at the FAA's Technical Center in 1984 to develop and refine the test methodology [63]. This forward fuselage section also was dropped at 20 ft/sec. The fuselage was instrumented with structural accelerometers and displacement transducers (rod potentiometers) between the bottom of the fuselage and the bottom of the cabin floor. One instrumented dummy was onboard, but there were more dummies in other seats. The fuselage was dropped onto a load-measuring platform. The dynamic crush, obtained from the accelerometer data, was 18.4 in. (Data from the displacement transducers was not valid because of lateral displacement of the attachments as the structure crushed.) The measured static crush was 14.5 in. The crush pattern is shown in figure 3-3. The dummy data indicated that the impact was not injury producing. Several recommendations were made to improve the test methodology, including new attachments for the potentiometers and the use of digitized high-speed film data to determine dynamic crush.

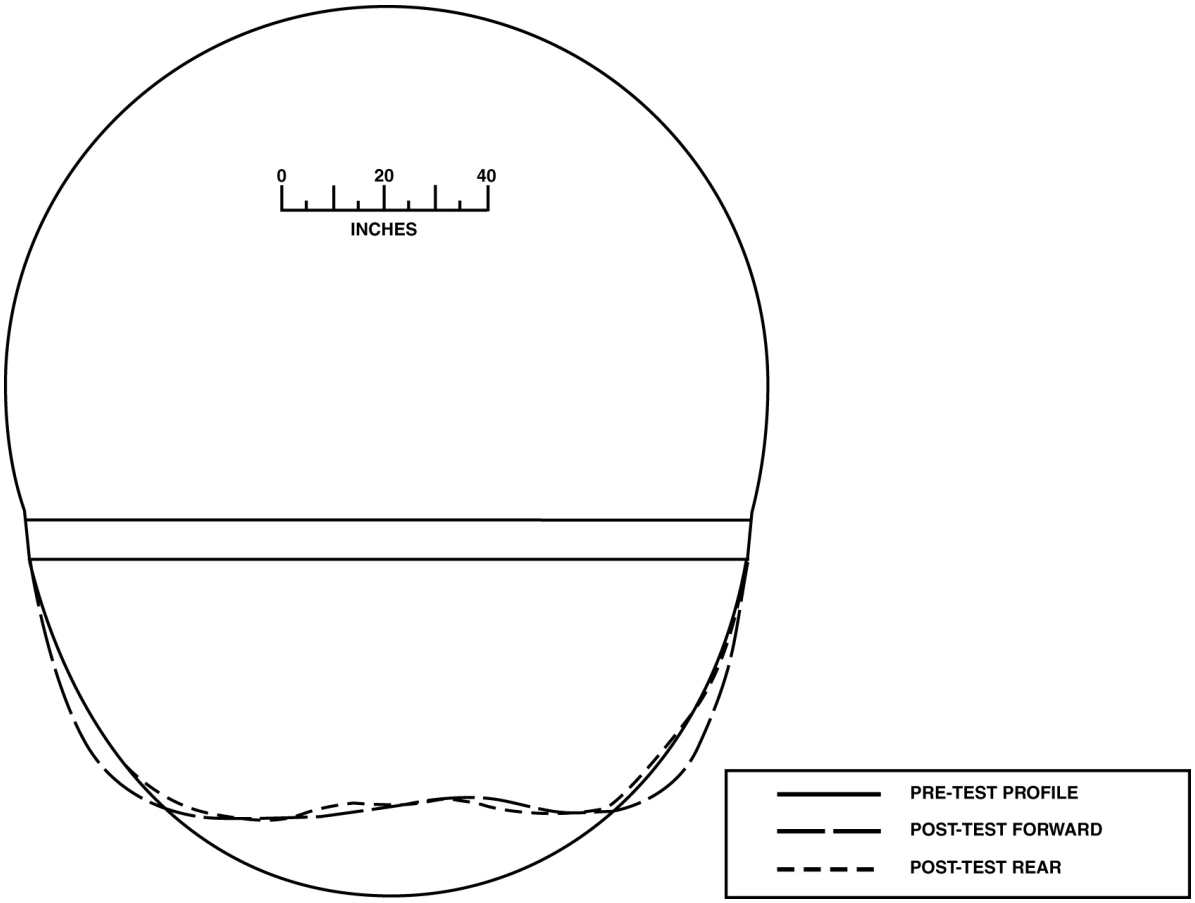

FIGURE 3-3. DEFORMATION OF B-707 FORWARD FUSELAGE SECTION FOLLOWING DROP TEST

Several months after the B-707 drop test, an aft fuselage section of a DC-10 was dropped at the FAA's Technical Center using the same test setup and protocol [64]. The vertical velocity was also 20 ft/sec. All of the damage, which was slight, occurred below the cargo floor and was due to the buckling of the vertical supports for the cargo floor structure. This has been the only test of a wide-body airplane fuselage conducted to date.

Typical acceleration data from the section tests are shown in figures 3-4 and 3-5. The much higher accelerations generated by the stiffer structure of the narrow-body center section, in contrast to the softer forward section, can be seen in figure 3-4. Also of interest is the difference in acceleration levels across the width of the fuselage center section. This difference is not noticeable in the overall softer structure forward of the wing. The accelerations of the wide-body section, shown in figure 3-5, are much less than those of the narrow-body center section (figure 3-4(a)), but somewhat higher than those of the softer forward section (figure 3-4(b)).

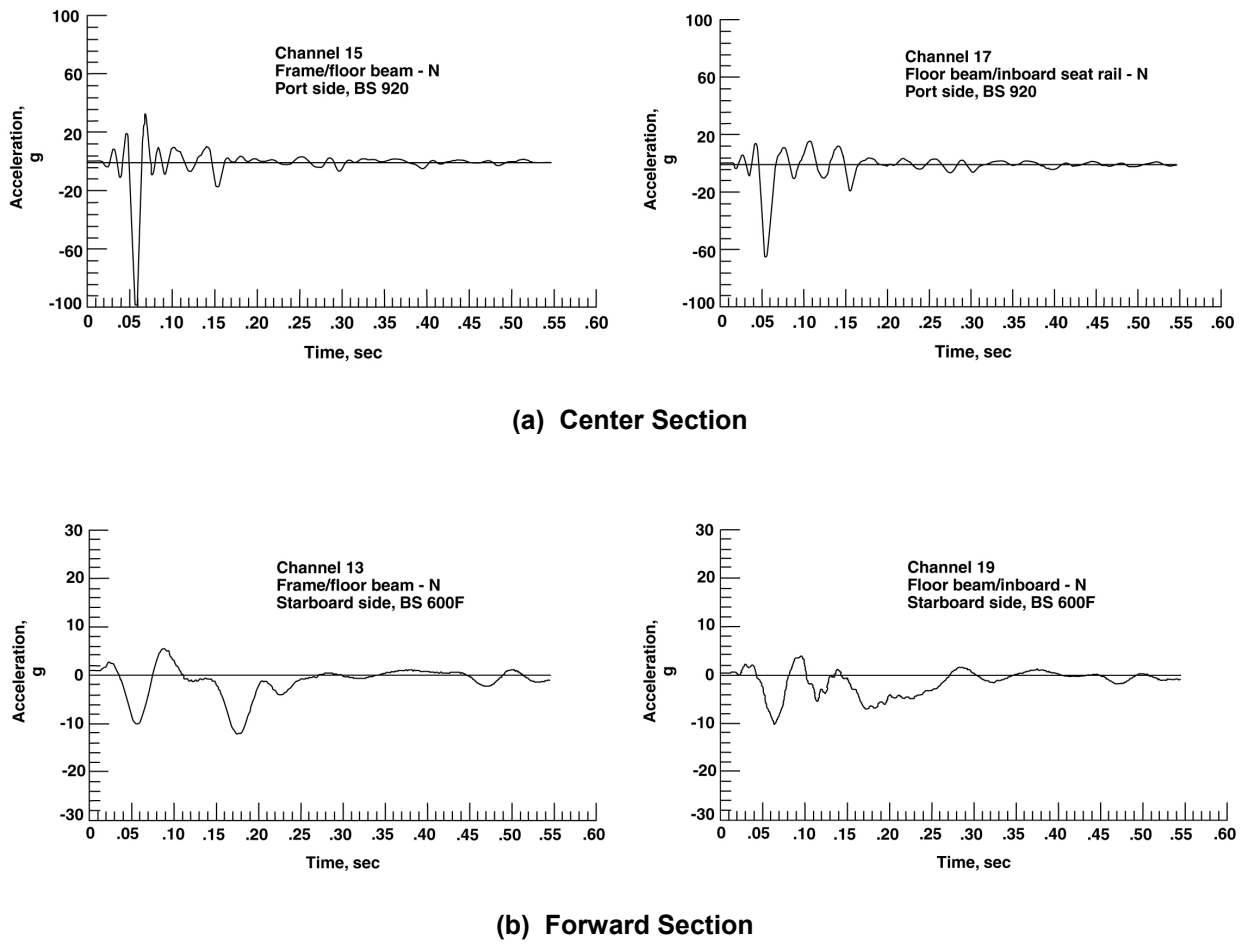

FIGURE 3-4. ACCELERATION TIME HISTORIES OF B-707 FUSELAGE SECTION DROP TESTS

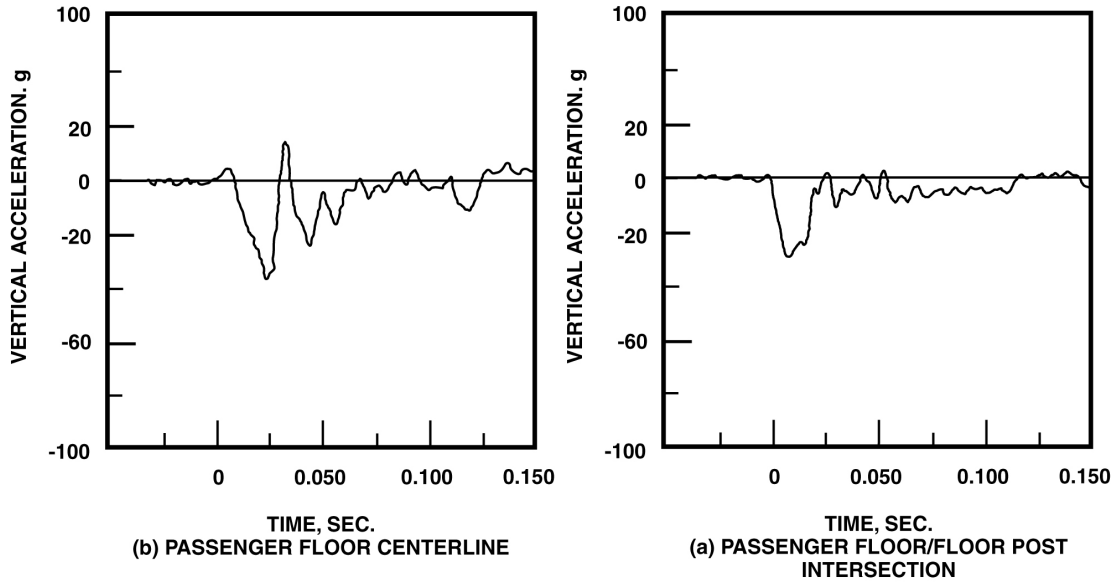

FIGURE 3-5. WIDE-BODY FRAME SECTION TEST RESULTS

In June 1984, a complete B-707 airplane (minus landing gear) was drop tested to evaluate the airframe strength characteristics. Data from this test were used to refine the KRASH model for the upcoming CID test [64]. The drop test was structured to simulate the planned CID impact conditions except for forward velocity and aerodynamic loading. Sink speed was 17 ft/sec. Pitch attitude was 1 degree nose up and roll was 0 degrees.

After the test, the lower fuselage of the B-707 was crushed and frame failures were noted on the centerline and along the sidewall. The extent of damage was greater in the aft region than in the forward cargo bay. Estimated crush was about 2 in. aft of the nose gear bulkhead; 4 in. forward of the wing leading edge; and 11 to 13 in. aft of the main landing gear bulkhead. Crushed ducting along the wing box keel indicated that the structure had deflected at least 6 in. in this area. The bulkhead at the wing trailing edge ruptured and pushed the floor upward at least 4 in. at the center, severing the transverse beams and seat tracks at that location. Since no floor accelerations were recorded, the observed damage could not be related with quantitative response levels.

There was no wing fuel tank damage due to impact except at the wing tip, which initially contacted the ground as the wing flexed. The upper strut attach points of the left wing inboard engine pylon failed, but the engine lodged between the wing and the ground.

The FAA conducted two longitudinal tests on a 10-ft section of a B-707 several years later to generate baseline data for KRASH and other analytical programs [65]. The fuselage section was just forward of the rear galley. It contained three rows of two triple-passenger seats with dummies in each seat. The seats had been strengthened to meet the higher expected loads. There were no fuel system components onboard. The fuselage was mounted on a Hyge sled and tested at input levels of 7.4 G's (22 ft/sec) and at 14.2 G's (36 ft/sec). Neither the fuselage shell nor the floor structure was damaged. The floor and fuselage accelerations were basically the

same. Peak accelerations were 7.6-7.8 G's for the lower speed test and 14.7-15.0 G's for the higher speed test.

In 1992, the FAA conducted a vertical drop test on a commuter category Metro III airplane fuselage [66]. The purpose of the test was to measure the structural response of the fuselage, floor, seats (standard and modified), and dummies. The test setup is illustrated in figure 3-6. The engines and nacelles of this low-wing aircraft are below the lower molding of the fuselage structure. It was assumed that they would contact the ground prior to or simultaneously with the fuselage. Thus, the inertial loads from the wings and engines/nacelles would be directly reacted by the ground and not transferred into the fuselage. Therefore, their mass was not critical to the test results and the wings were removed, so there were no fuel tanks or engines on the test article. The landing gear and vertical and horizontal stabilizers also had been removed, leaving only the fuselage with the center wing box. The vertical impact velocity was 26.32 ft/sec. Peak accelerations were 40 to 60 G's throughout the airframe. Deformation along the entire length of the fuselage was less than 2 inches.

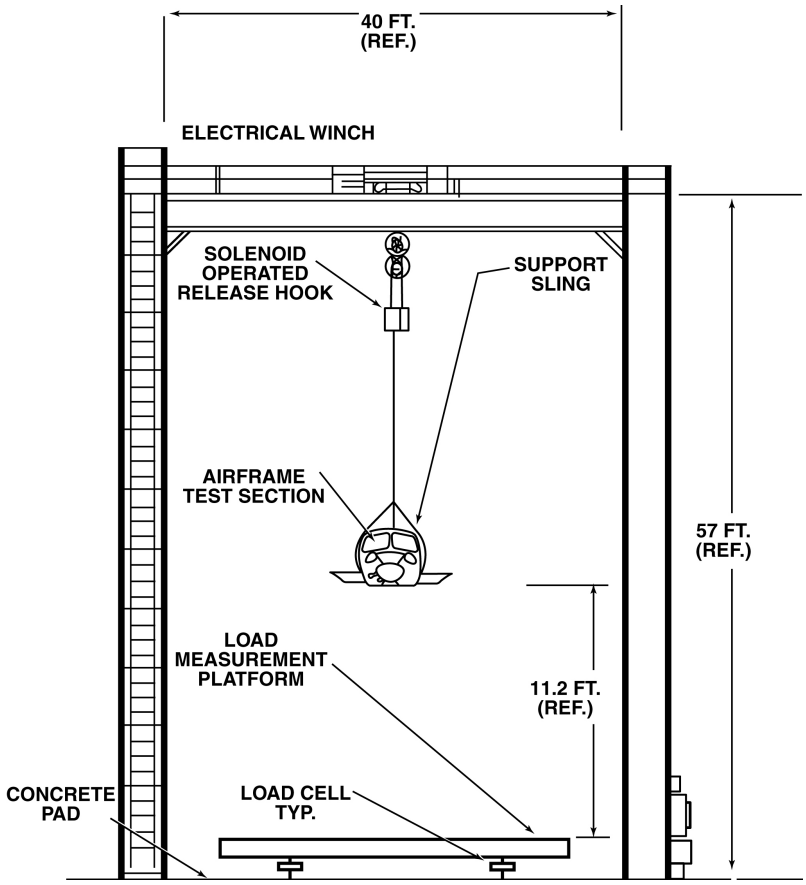

FIGURE 3-6. DROP TEST SETUP FOR METRO III FUSELAGE

Several years later (1995) another vertical drop test was conducted on a commuter category airplane—a Beechcraft 1900C [67]. The Beechcraft is a low-wing, twin-turboprop airplane. The purpose of the test was to measure the impact response of the fuselage, cabin floor, seats (standard and modified), and dummies. As in the Metro III test, the wings, engines, landing

gear, and vertical and horizontal stabilizers were removed prior to the test; thus, there were no fuel tanks onboard. The fuselage was dropped from a height of 11.2 ft, impacting with a velocity of 26.8 ft/sec. Accelerations on the fuselage were 140 to 160 G's, but acceleration levels on the dummies showed that this was a severe but definitely survivable impact. Deformation along the bottom of the fuselage ranged from 0.3 to 1.6 in., the latter occurring in the empennage portion of the fuselage.

The first test in which any part of the fuel system was involved occurred in 1993. A vertical drop test was conducted by the FAA of a 10-foot tapered section of a Boeing 707 [68]. Figure 3-7 illustrates the test configuration. Seats and dummies were installed to achieve the desired test weight. The outer floor beams at each end of the section were reinforced to minimize the open end effects. The focal points of the test were the overhead bins and the auxiliary fuel tank. The auxiliary fuel tank was a 330-gallon, double-wall cylindrical tank mounted in a cradle which was attached to the underside of the fuselage floor, in the area noted in figure 3-8. The tank contained water to simulate the weight of a tank full of fuel and was pressurized to 2.5 psi.

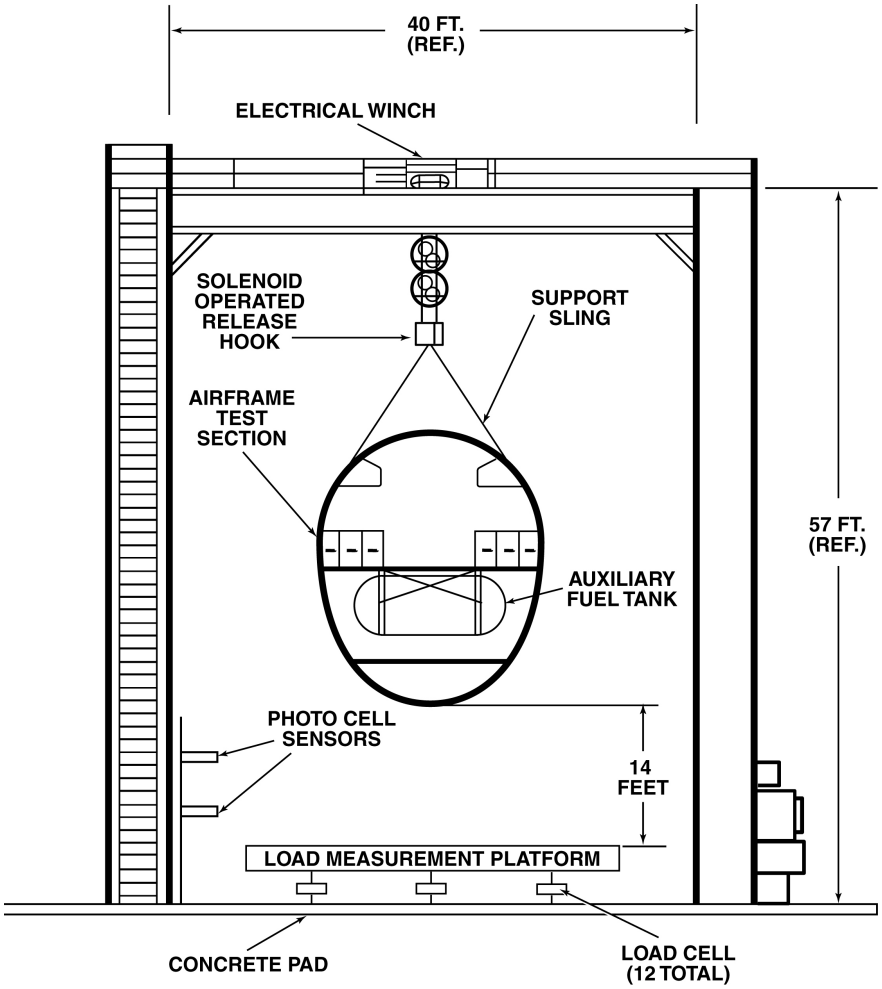

FIGURE 3-7. DROP TEST CONFIGURATION FOR A B-707 FRAME SECTION WITH AUXILIARY FUEL TANK

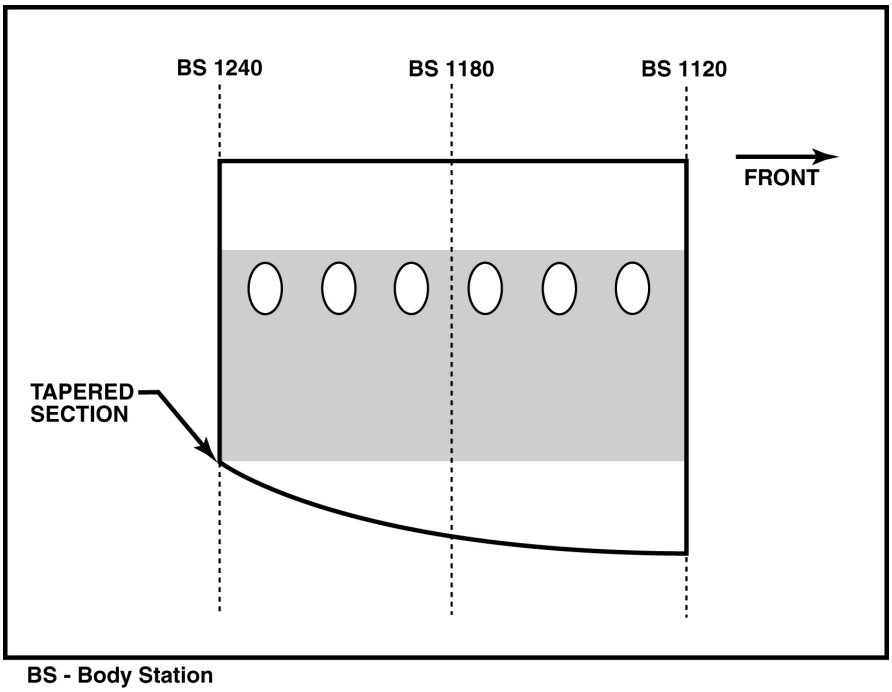

FIGURE 3-8. B-707 TEST SECTION—SIDE VIEW

The fuselage section was dropped onto a load-measuring platform. Impact was at 30 ft/sec. The average fuselage maximum acceleration was 36 G's for a 57 msec idealized triangular pulse. Measured peak G's ranged from 32 G's at the front to 44 G's at the rear. The average maximum fuel tank deceleration was about 31 G's. The force applied on the tank was distributed to the cradles and straps supporting the tank. The data from the test dummies indicated that the impact was severe but survivable and moderate injuries could have been expected. The authors noted that the measured accelerations were higher than expected because the installation of the auxiliary fuel tank prevented additional fuselage crushing.

Figure 3-9 shows the fuselage section following impact. The crush of the lower fuselage averaged 16.6 in. at the front and 6.4 in. at the rear. Maximum crush was 19.6 in. at the left front. The auxiliary fuel tank remained attached but the center lower surface of the tank crushed inward approximately 4 in. due to the protrusion of the fuel discharge line hardware. Both the inner and outer walls cracked around the welding of the fuel line outlet, allowing fluid to leak out. It was concluded that the redesign of the fuel tank discharge plumbing might prevent such tank rupture and leakage.

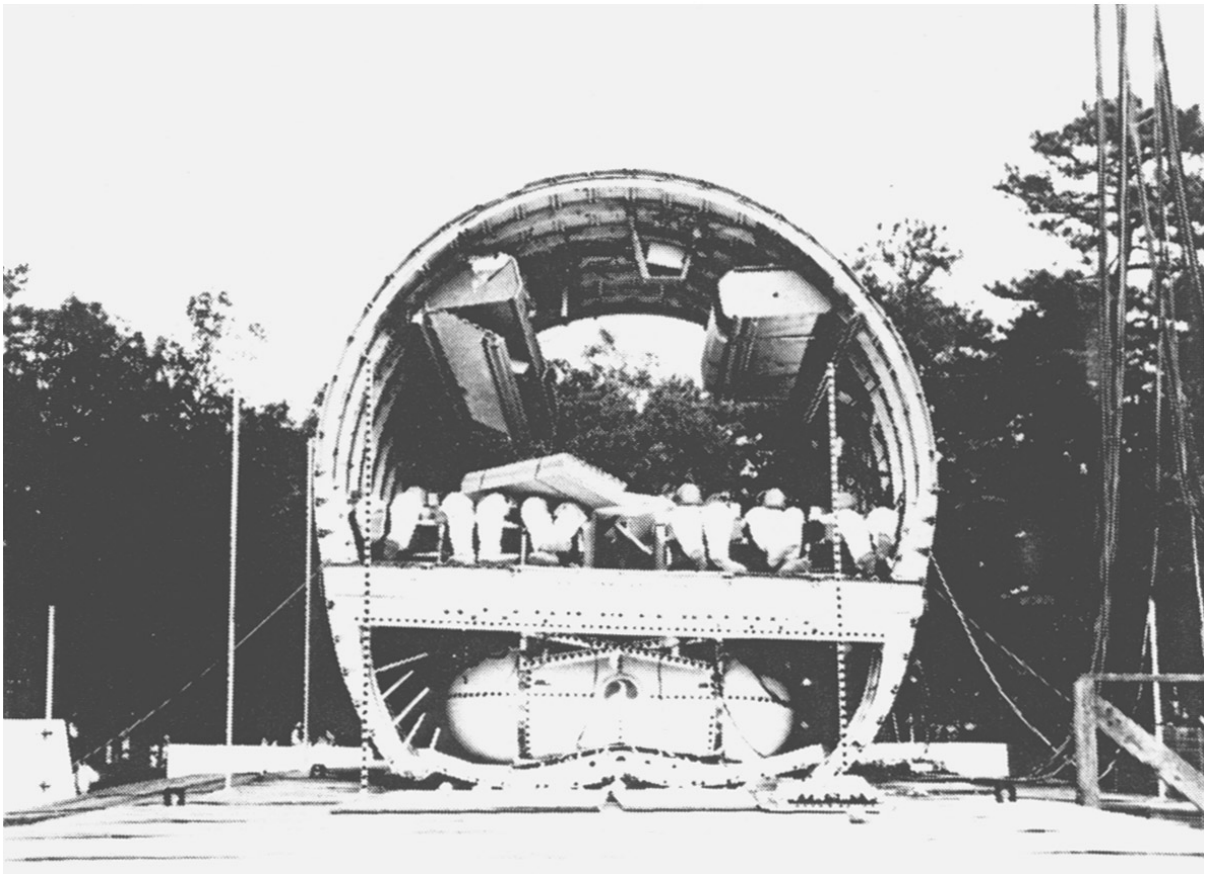

FIGURE 3-9. FRONT VIEW OF TEST SECTION AND FUEL TANKS AFTER IMPACT

The next test of a fuselage fuel tank came during a series of three longitudinal acceleration tests on a 10-ft fuselage section of a Boeing 737, Model 200 conducted in 1997. These tests were conducted at the Transportation Research Center using their 24-inch Hyge sled [69]. The fuselage section was configured with two stowage bins and a 500-gallon auxiliary fuel tank located in the cargo area. The fuel tank was a Patrick Aircraft Tank System attached to the underside of the cabin floor beams, as shown in figure 3-10. The tank was filled with water. All of the tests involved triangular acceleration pulses. Peak sled accelerations for Tests 1, 2, and 3 were 6.1, 8.2, and 14.2 G's respectively. Corresponding test velocities were 23.2, 32.2, and 41.7 ft/sec.

There was no visual evidence of fuselage or stowage bin deformation during Test 1. However, the auxiliary fuel tank broke loose from its attachment framework approximately 75 to 85 msec into the acceleration pulse. It was eventually restrained by the test fixture approximately 50 msec later, after it had moved almost two feet. The front edges of the tank's aluminum side rails had sheared off against the front stops of the attachment framework and the lower attachment straps had broken loose from the airframe's cargo floor. Recorded acceleration data was compromised when the tank impacted the test fixture, producing data spikes in the cabin floor accelerations. The tank was removed for the next two tests.

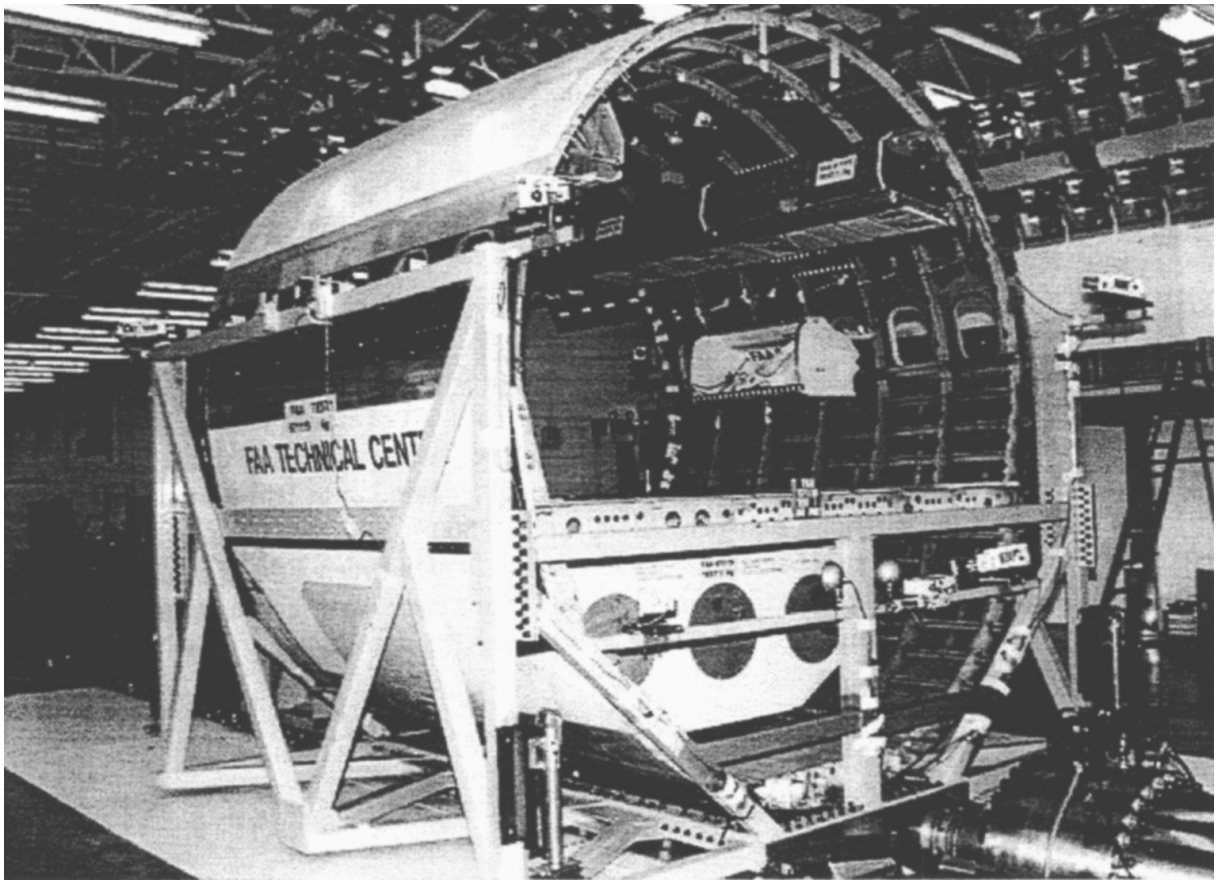

FIGURE 3-10. AIRFRAME TEST SECTION WITH AUXILIARY FUEL TANK INSTALLED

In October 1998, a Shorts 3-30 regional transport airplane was subjected to a vertical drop test [70]. This aircraft is a high-wing, twin-turboprop airplane with a capacity of 30 passengers. The entire aircraft, minus landing gear, was dropped, as shown in figure 3-11. The main object of the test was to determine the impact responses of the fuselage, seat tracks, seats, and test dummies. However, because of the unique configuration and location of the fuel system, it also was included in the test. The fuel system contains two fuel tanks which are located on top of the fuselage, as shown in figure 3-12. Each tank holds 288 gal of fuel and is composed of two interconnected fuel cells. Although cells 1, 2, and 3 are physically housed together while cell 4 is separate, cells 3 and 4 are interconnected and make up one of the tanks. The tanks were approximately 3/4 full of water to simulate a full tank of fuel. All of the fuel lines coming from the tanks were capped but the interconnect pipe between cells 3 and 4 was left in place.

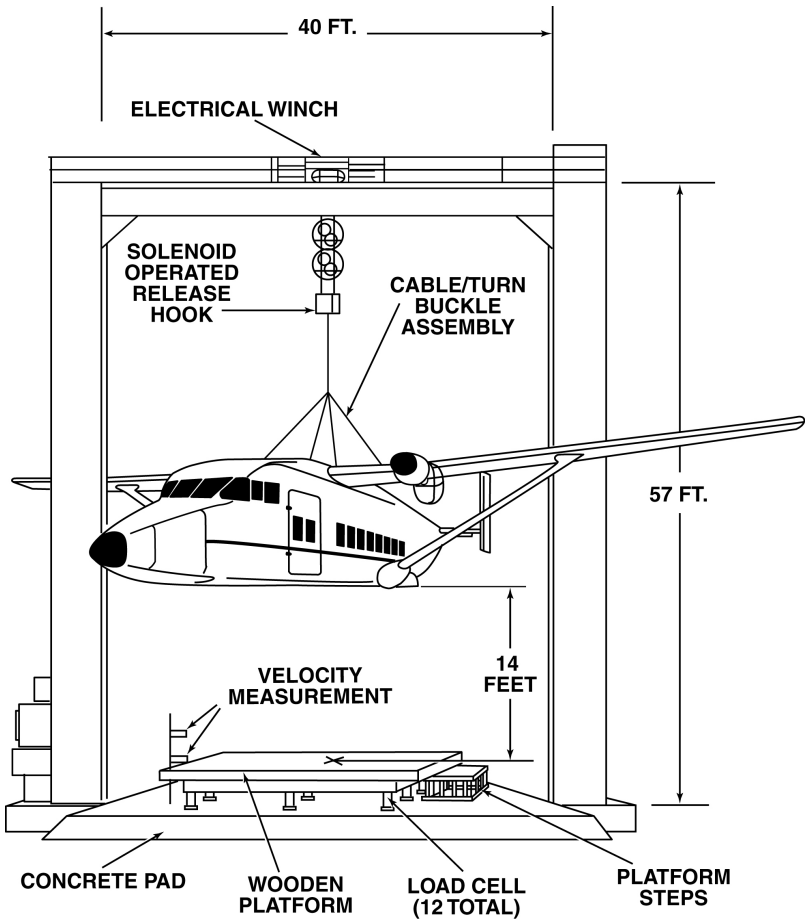

FIGURE 3-11. DROP TEST SETUP FOR SHORTS 3-30 AIRPLANE

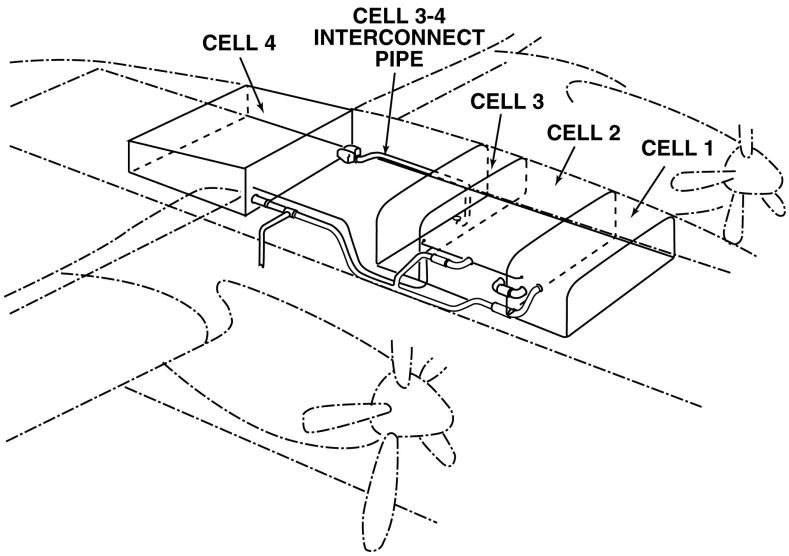

FIGURE 3-12. SHORTS 3-30 FUEL SYSTEM

The airplane was dropped with an impact velocity of 28 ft/sec. The maximum fuselage acceleration was approximately 90 G's with a pulse duration of 15 msec (measured at the floor). Maximum crush was 1.3 in. with the average crush under the floor only about 0.1 in., indicating a very stiff structure. Acceleration measurements on the dummies showed a severe impact which would have resulted in moderate to severe injuries to the occupants.

The external upper section of the fuselage sustained significant deformation because both fuel tanks intruded into the cabin area 1 to 1.5 ft, due mainly to the load the fuel tanks exerted on the fuselage ceiling. The fuel tanks broke loose from their mountings and large quantities of fluid spilled directly onto the dummies. There were numerous rips and tears in the tanks, the four gravity feed outlets were crushed, and fluid leaked from the interconnect pipes. (See figures 5-9 and 5-10 in section 5.)

The large quantity of fluid spilled would make a fire likely in the event of a real-world crash. This, coupled with the fact that the occupants would be drenched in fuel, would be catastrophic.

The most recent drop test was conducted by the FAA in October 1999 [71]. A B-737 fuselage section containing several rows of seats, test dummies, and an underfloor auxiliary tank was dropped from a height of 14 ft. The fuel tank, shown in figure 3-13, was a double-wall metal tank with honeycomb between the walls. There was no bladder inside the tank.

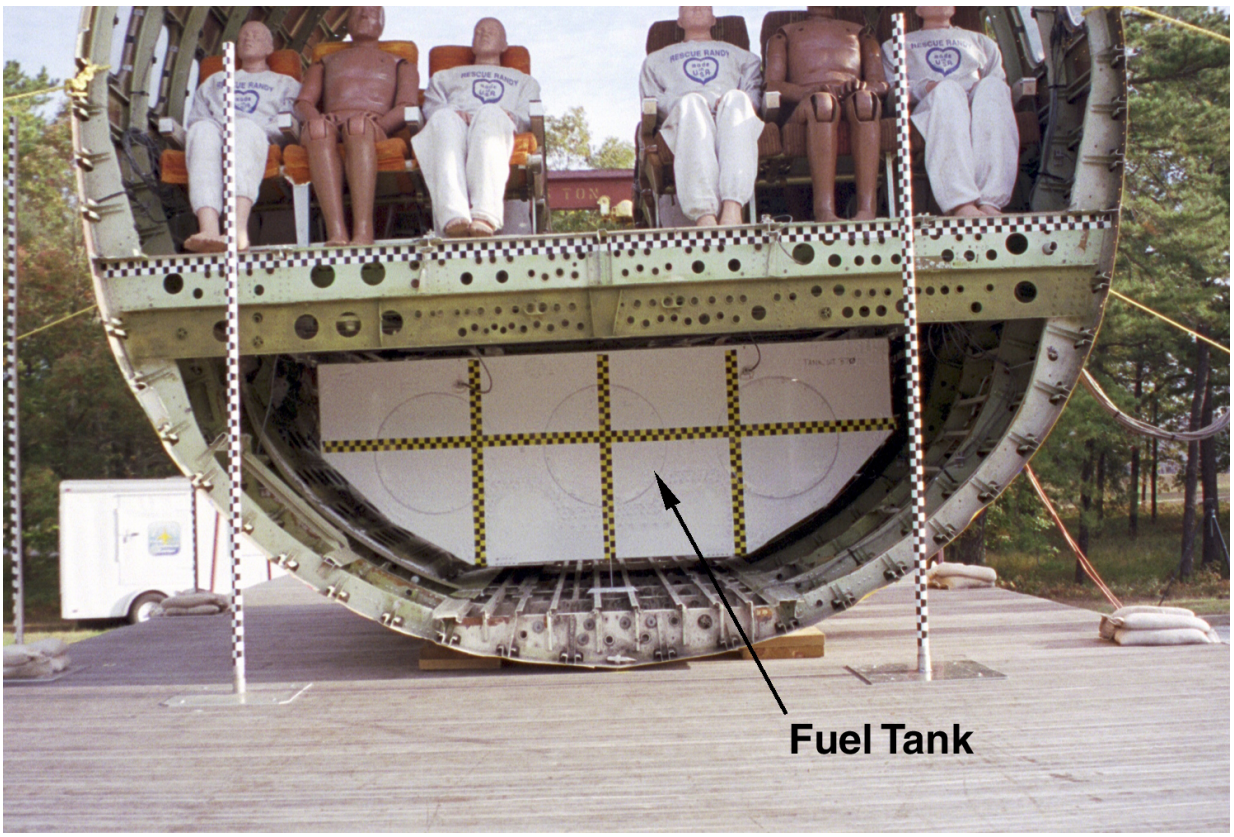

FIGURE 3-13. PRETEST VIEW OF A B-737 FUSELAGE SECTION WITH UNDERFLOOR AUXILIARY FUEL TANK

Fluid leakage from the fuel tank was readily apparent as a steady flow. This leakage was reported as being caused by the lower fuselage frame puncturing the fuel tank. The posttest damage to the fuselage is shown in figures 3-14 to 3-16. The cabin floor above the fuel tank was pushed upward several inches because of the incompressibility of the full tank, reportedly generating high G loads on the seats.

FIGURE 3-14. POSTTEST VIEW OF A B-737 FUSELAGE SECTION

FIGURE 3-15. BUCKLED FUSELAGE FRAME FORWARD OF AUXILIARY FUEL TANK

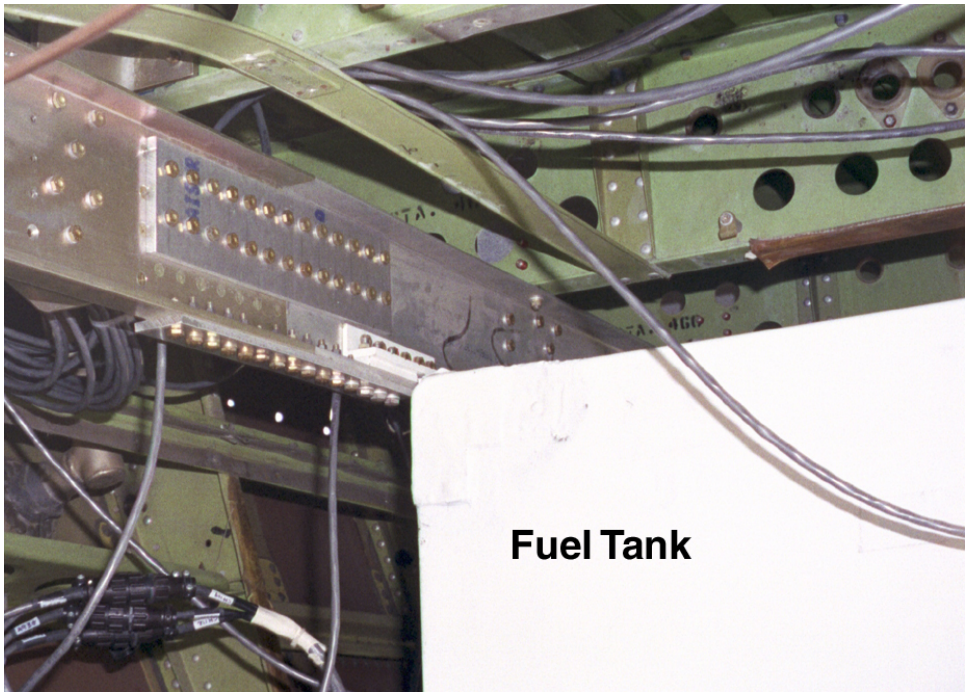

(a) Pretest

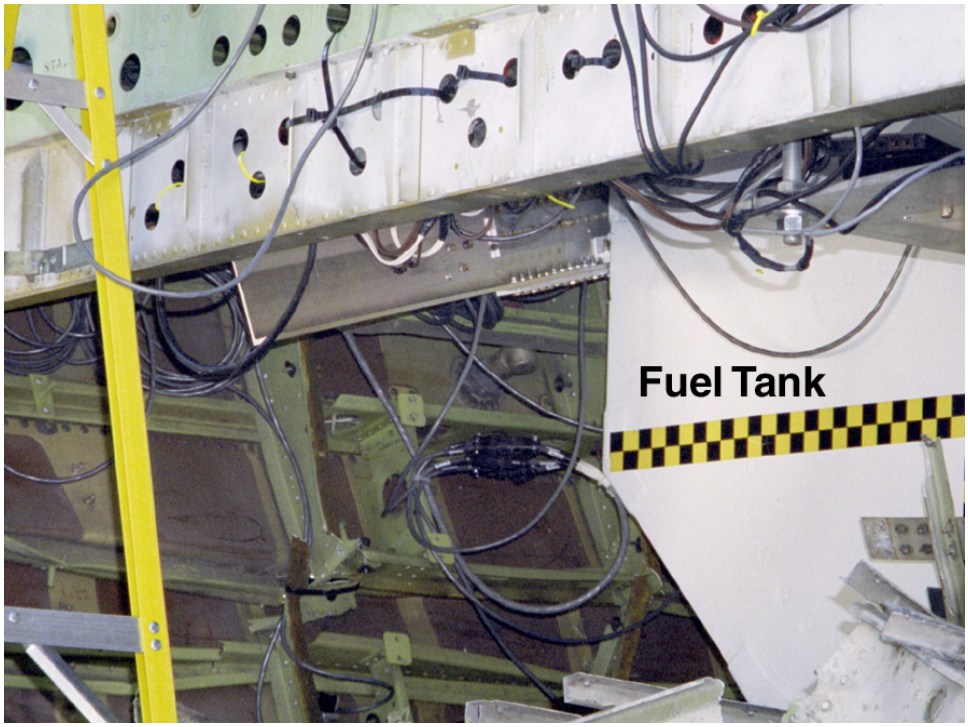

(b) Posttest

FIGURE 3-16. FUSELAGE UNDERFLOOR STRUCTURE AND AUXILIARY FUEL TANK

3.2 SUMMARY OF TEST RESULTS.

The test conditions and results are summarized in table 3-1. Two points are immediately obvious upon examining the maximum G levels and the maximum crush obtained during these tests: first, the smaller commuter airplanes (Metro III, Beechcraft 1900C and Shorts 3-30) all have much stiffer structures relative to the aircraft size and weight than the larger transports, with correspondingly smaller crush distances and higher G levels; and second, the variations in stiffness of the larger transport airplane structure depending on the part of the fuselage involved. The variation is easily seen when comparing the results of the first two drop tests of the B-707 involving the softer structure ahead of the wing and the stiff structure just aft of the wing (including the rear wing spar, wheel wells, and keel beam). This difference in stiffness is also apparent in the B-707 test with the cylindrical auxiliary fuel tank where the crush in the front of the test section was over twice that in the rear. These results indicate that, when designing a fuselage fuel tank installation, the stiffness (potential G level and crush distance) of the specific planned tank location must be factored into the design rather than relying on generalized stiffness data for the overall fuselage.

The tests conducted so far have involved three different fuel system configurations. None of these fuel system installations performed entirely satisfactorily during tests that were well within the range of human survivability. Clearly more work needs to be done to improve the crash safety of the fuselage auxiliary fuel tanks and later sections of this report address potential improvements and issues involved. The main fuel system of the Shorts 3-30 is outside the scope of the current study, but the serious deficiencies of the fuel system performance from the standpoint of fire safety are noteworthy. Improved fuel system design would surely improve the fuel system crash performance.

The crush measurements from the complete B-707 airplane test compared to the results of the various section tests raise some questions about using the section test structural data for design purposes. The section tests showed that open-ended sections could crush more then might be expected. Yet, the complete fuselage test crushed more in the center section than the comparable section test, probably due to wing loading.

The section tests do seem to be a valid method of testing components (e.g., overhead bins, seats, and auxiliary fuel tanks) in air-to-ground impacts with no obstacles involved. However, the vertical drop tests and longitudinal sled tests, although providing some indication of crash loads and crushing which might be encountered, do not test other forces and failure mechanisms which are more prevalent in actual crashes and that would be expected to affect fuselage fuel tank integrity. These mechanisms include combined longitudinal and vertical forces, the effect of obstacle impacts, and extensive structural displacement as the aircraft is being torn apart.

TABLE 3-1. SUMMARY OF AIRPLANE FUSELAGE IMPACT TESTS

Section Tests								
Aircraft	Impact Direction	Impact Velocity/fps	Maximum G	Pulse Duration/ms	Max. Crush/in.	Avg. Crush/in.	Fuel System	F. S. Performance
B-707 (fwd of wing)	Vertical	20	20	NR	24	NR	No	NA
B-707 (center)	Vertical	20	71	NR	No Damage	NR	No	NA
B-707 (fwd)	Vertical	20	NR	NR	18.4 (dyn) 14.5 (s)	NR	No	NA
B-707 (aft)	Longitudinal	22	7.8	NR	NA	NA	No	NA
B-707 (aft)	Longitudinal	36	15	NR	NA	NA	No	NA
B-707 (aft)	Vertical	30	36		19.6 (front) 8.4 (rear)	16.6 (front) 6.4 (rear)	Aux. (cylind)	(1)
B-737 (fwd)	Longitudinal	23.2	6.1	NR	NA	NA	Aux. (PATS)	(2)
B-737 (fwd)	Longitudinal	32.2	8.2	NR	NA	NA	No	NA
B-737 (fwd)	Longitudinal	41.7	14.2	NR	NA	NA	No	NA
DC-10 (aft)	Vertical	20	~37	NR	~2	NR	No	NA
Complete Fuselage Tests								
Aircraft	Impact Direction	Impact Velocity/fps	Maximum G	Pulse Duration/ms	Max. Crush/in.	Avg. Crush/in.	Fuel System	F. S. Performance
Metro III	Vertical	26.32	40-60	NR	<2	NR	No	NA
Beechcraft 1900C	Vertical	26.8	140-160	NR	1.6	NR	No	NA
Shorts 3-30	Vertical	28	90	15	1.3	0.1 (under floor)	Main (overhead)	(3)
B-707	Vertical	17	NR	NR	2 (front) 13 (rear)	NR	wing	(4)

(1) Leaked from cracks around fuel discharge line outlet.
(2) Fuel tank broke loose.
(3) Fuel tanks broke loose. Massive spillage onto occupants inside cabin.
(4) Damage at wing tip; engine pylon attach points failed.

NR = Not Reported
NA = Not Applicable

One additional result should be noted. Dummy measurements in the vertical drop tests indicate that all these tests produced forces which were survivable. Although the velocity changes were comparable to those recommended for crashworthy design based on results from the KRASH program (see section 2.3), the peak accelerations obtained from the test data are considerably higher than those recommended. Times to reach peak G were also longer in the tests. Additional test data which could be utilized to refine the KRASH program still further might resolve this discrepancy.

4. TRANSPORT AIRPLANE ACCIDENT DATA.

4.1 THE PISTON ERA.

In 1949, NACA published a bibliography of unclassified aircraft fire literature [72] that lists studies of postcrash fire from as far back as 1922. This awareness of the problem, along with the high rate of in-flight fires, was a major concern to aircraft designers in the post-WWII era.

One of the early U.S. studies of the transport crash fire problem [2] reported that postcrash fire occurred in about 15 per cent of U.S. air-carrier accidents in 1946 and about 30 percent of the occupants died from the fire in these accidents. This report then reviewed fuel properties and ignition sources for both in-flight fires and postcrash fires.

A 1951 report by a Civil Aviation Authority (CAA) engineer at an SAE meeting [73] indicated that, between 1938 and 1951, crashes not followed by fire were fatal to 60.8 percent of the occupants, and in crashes followed by fire, the rate was 84.6 percent fatal. This paper discussed test work on bladder tanks and self-sealing fittings, as well as findings from accident investigations.

A civil Aeronautics Board (CAB) study in 1966 covered 153 accidents occurring in 1955-1964 that were caused by or resulted in fire [74]. Of the 4,559 passengers and crew members involved, 1,955 persons were fatally injured, and 2,604 persons survived with varying degrees of injury ranging from severe to none. Fifty one (33%) of the 153 accidents were severe enough to fatally injure all onboard. An additional 28 (18%) accidents had fatalities and survivors. These accidents had a total of 1,161 occupants, of which 488 (42%) died. Of these deaths, 294 (60%) were due to fire. An additional 57 occupants were seriously burned. Of the 1,955 occupants in the 79 fatal and partially survivable accidents, 294 (15%) died due to the fire. The report provides a detailed description of some of the accidents where there were both fatalities and survivors and points up the need for additional work on fire prevention in design, as firefighting capability is rarely available during the short evacuation period after impact.

4.2 THE JET ERA.

In 1975, a NASA study by Stanford Research Institute covered accidents occurring to U.S. commercial aircraft during the period 1963-1974 [75]. The focus was on determining the degree to which materials with improved fire resistance and/or decreased toxicity could reduce injuries, fatalities, and fire damage. During this period, there were 545 nonturbulence accidents, of which 122 (22%) had a fire in the airframe. (They excluded accidents where there was no airframe damage and those where fires were confined to the engine and/or wheel well.) While only 22% of these accidents had fires, 75% of the fatal accidents involved fire. In at least 21 of the 122 fire accidents, the impact damage was relatively light and the fire damage was severe. Nearly half of the fire accidents were on landing. Overall, about 15% of the fatalities were due to fire, the same figure as in the 1966 study.

Of the 71 fatal accidents involving fire, 39 were not impact survivable, 13 had some fatalities definitely caused by fire and 19 were not designated impact survivable or nonsurvivable (but 13

of these may have been survivable). Thus, in at least 45 (63%) of these fatal accidents it was immaterial whether fire occurred or not.

In the same time frame, Horeff [76] reviewed 382 substantial damage accidents and incidents to U.S. and foreign operators which were considered impact survivable, i.e., not all occupants were fatally injured. Of these, 37 had fatalities. There were 42 approach accidents, of which 22 were fatal. Fire occurred in 16 of the 22 fatal and 4 of the 20 nonfatal approach accidents. There were 179 landing accidents, of which 4 were fatal. Fire occurred in 3 of the fatal and 35 of the non-fatal landing accidents. There were 56 takeoff accidents, of which 7 were fatal and involved fire, with all 95 deaths attributed to fire. Of the 37 occurring in flight, one aircraft experienced an in-flight fire followed by an off airport landing, resulting in 123 fatalities due to fire. In 19 cases, wing separation occurred. Fire accounted for over one-third of the deaths in these accidents. In 15 cases, fuel tank damage occurred; 7 of the 15 were fatal and fire accounted for about 30% of the deaths. Fuel was released from tanks in 22 cases without fire. Seven fire accidents had reports of fuel line or engine fuel release; two were fatal and all 91 deaths were due to fire. There were 16 cases of fuel tank explosions, 4 from electrostatic sparks and 12 from heating due to external fires. Combining survivable and nonsurvivable fatal accidents during this time period, about 16% of the 2455 deaths were due to fire.

Another report covering almost the same time period was produced by the NTSB in 1977 [77]. This was intended as a follow-on to reference 74 and reviews the changes in the air carrier business during the interim between reports. These changes included moving almost completely to a pressurized jet fleet with a better structural environment, better seat and restraint systems, greater use of kerosene and better engine fire extinguishing systems. The number of fire accidents decreased slightly (153 to 141) but the number of persons exposed to these accidents increased significantly, from 4559 to 7043, due to larger aircraft and high-load factors. In addition, the accident rate decreased while number of flights and seat-miles increased rapidly. Of greater significance to postcrash fire studies, the ratio of fatalities from all causes to the total number of occupants in fire accidents decreased from 43% to 26% during this period. This means an occupant had a 65% better chance of surviving the fire accident in the latter period compared to the former. In addition, an occupant who survived the impact had a 37% better chance of escaping the fire. However, due to higher passenger loads and thus increased numbers exposed in each accident, the total number of fire fatalities remained almost constant in the two periods, 297 compared to 292. The percentage of accidents to U.S. air carriers in all operations in which fire occurred increased from 18.6 to 25.3.

Two factors were identified to account for the changes in fire accident data. Turbojet-powered aircraft accounted for an increasing percentage of all flights, with their greater reliability, structural integrity, changed operating environment and use of different fuel. Secondly, improved fire protection regulations, improved interior materials, and improved engine reliability reduced in-flight fires and their associated hazards. No change could be noted in the effect of increased availability of airport crash/fire/rescue on survivability between the periods. Most of the regulatory changes in this area were to take effect after 1975.

In 1980, the NTSB published a Special Study "General Aviation Accidents: Postcrash Fires and How to Prevent or Control Them" [78]. In this study of 22,002 general aviation accidents during

1974 to 1978, they noted that postcrash fire occurred in 8% of the accidents and that 59% of postcrash fire accidents resulted in fatalities. They reviewed the history of postcrash fire prevention efforts, surveyed the state-of-the-art technology, and showed how the U.S. Army's efforts had succeeded in reducing helicopter fire deaths by the application of the techniques in the Crash Survival Design Guide. They also reviewed the minimal regulatory provisions dealing with postcrash fire and made six recommendations to the FAA for corrective action. Some are applicable to transport aircraft. They were

> "Amend the airworthiness regulations to incorporate the latest technology for flexible, crash-resistant fuel lines and self-sealing frangible fuel line couplings at least equivalent in performance to those used in recent FAA tests and described in Report No. FAA-RD-78-28 for all newly certificated general aviation aircraft. (Class II, Priority Action) (A-80-91)"
>
> "Amend the airworthiness regulations to incorporate the latest technology for light weight, flexible crash-resistant fuel cells at least equivalent in performance to those used in recent FAA tests and described in Report No. FAA-RD-78-28 for newly certificated general aviation aircraft having nonintegral fuel tank designs. (Class II, Priority Action) (A-80-91)"
>
> "Require after a specified date that all newly manufactured general aviation aircraft comply with the amended airworthiness regulations regarding fuel system crashworthiness. (Class II, Priority Action) (A-80-92)"
>
> "Fund research and development to develop the technology and promulgate standards for crash-resistant fuel systems for aircraft having integral fuel tank designs equivalent to the standards for those aircraft having nonintegral fuel tank designs. (Class II, Priority Action) (A-80-93)"
>
> "Assess the feasibility of requiring the installation of selected crash-resistant fuel system components, made available in kit form from manufacturers, in existing aircraft on a retrofit basis and promulgate appropriate regulations. (Class II, Priority Action) (A-80-94)"
>
> "Continue to fund research and development to advance the state-of-the-art with the view toward developing other means to reduce the incidence of postcrash fire in general aviation aircraft. (Class II, Priority Action) (A-80-95)"

In the 20 years that followed, not one of these recommendations was implemented for fixed-wing aircraft. The first two were partially implemented for helicopters in 14 CFR Parts 27 and 29.

The SAFER Committee (see section 2.3.4) recommended in 1980 that data collection and verification from actual accident investigations be improved to provide more robust validation for theoretical crash scenarios. The Committee repeated earlier recommendations by the Coordinating Research Council in its Report #482, titled "Aviation Fuel Safety – 1975."

> In the case of Air Carrier accidents, NTSB Form 6120.2 is used in reporting all civil aircraft accidents involving aircraft exceeding 12,500 pounds takeoff weight, helicopters and Alaskan air carriers. Usually this form is supported by attached statements as well as the report of the Investigation Team. Complete though this form is, it still lacks certain vital information relevant to fuel fires; unfortunately the usual attachments to this form in an Accident File also lack the information. A revision to the form should focus attention on the need for information relative to fuel and fires. [53]

Form 6120.4 Sup. C now contains spaces for recording the fuel quantities in wing, tip, and fuselage tanks and some boxes to check regarding "spillsafe fittings" and fuel leakage. However, a review of structures reports of recent transport accidents reveals little specific data on fuel leakage locations, whether or not fuselage tanks were installed, the presence or absence of self-sealing valves, etc. This information is not stored in a usable computer database.

Accidents are rare events, and accidents which interject postcrash fire-related hazards into otherwise survivable circumstances are even more rare. Investigative authorities' inability to extract all available data and information from these infrequent occurrences has inhibited identification of real risks in real events. Unfortunately the SAFER Committee chose to prioritize high-cost, high-risk AMK research in preference to pursuing relatively low-cost, low-risk methodologies which would validate and verify the data upon which such choices were made. The SAFER Committee thereby violated its own *caveat* memorialized in its final report [53]:

> <u>Adequacy of Aircraft Accident Data</u>
>
> A sound plan of attack on any safety problem must start with a careful analysis of the accident data in order to pinpoint the true causes of accidents and identify effective remedies. Otherwise, we may devote large amounts of limited resources to solving the wrong problem.

One of the more recent detailed accident studies was reported by Boeing Commercial Airplane Company in 1982 in preparation for the Controlled Impact Demonstration (CID) [79]. This excellent study by Widmayer and Brende reviewed publicly available *and company data* and tabulated detailed information from 153 "potentially survivable" accidents drawn from an initial database of 583 accidents occurring from 1959 to 1979.

While fire occurred in 67% of the report's cases and fatalities due to fire in 37%, this database does not represent all kinds of accidents, only those during the selected period wherein good data could be derived to support the selection of crashworthiness improvements "or that demonstrated significant crash performance of the structure." The authors of this report are unable, during the current study, to obtain the same depth of data on later accidents because internal company data is not publicly available, we have provided a listing of selected accidents subsequent to 1979 that support the findings of the Boeing study (table 4-1) and show that the problems of postcrash fire have not been solved.

TABLE 4-1. SELECTED ACCIDENTS WITH FIRE, SHOWING IMPACT AND FIRE DEATHS

Event	Fire Data	Date	Aircraft	Location	Dead	Serious	M/N	Total	Impact	Fire
Abort T/O	Gear tearout, major fire	780301	DC-10	LAX	2	29	169	200	0	2
Gear Up Ldg	Destroyed by fire	810217	B-737-293	ORANGE CTY	0	4	106	110	0	0
In Flt Fire	Cabin flash fire 60-90 sec after stopping	830602	DC-9-32	COVINGTON	23	3	20	46	0	23
Takeoff Coll, Overrun	Both wings damaged	831223	DC-10/PA-31	ANCHORAGE	0	3	9	12	0	0
Coll Gnd, Cont. Rolled	Wing tanks ruptured	850121	L-188	RENO	70	1	0	71	43	27
Landing, Wx	Major destruction, fire	850802	L-1011-385	DFW	134	15	14	163	114	20
Ldg Hard, Slid Into Bldg	Major destruction of wings	870304	C-212	DETROIT	9	7	6	22	0	9
T/O Coll Gnd, Controlled	Wing struck pole, bldg, ground	870816	DC-9	DETROIT	154	1	0	155	154	0
T/O Coll Gnd Uncontrolled	Icing, lost lift. Short fireball inside	871115	DC-9	DENVER	28	24	30	82	28	0
Inflt Fire, Ldg No Hyd.	Engine fire, rapid CFR response	880415	DHC-8-102	SEATTLE	0	4	36	40	0	0
Eng Fail On T/O, Overrun	Fire in cargo area	880524	EMB-110	LAWTON	0	2	6	8	0	0
T/O Improper Config	Fire before stopping	880831	B-727-200	DFW	14	26	68	108	0	14
Landing, Uncontrolled	Major destruction, fire	890719	DC-10-10	SIOUX CITY	111	185	0	296	76	35
Gnd Coll	B-727 wing sliced DC9 fuselage	901203	DC-9-14	ROMULUS	8	10	26	44	3	5
Coll/W Commuter, Landing	Major fire	910201	B-737/SA227	LAX	22	10	48	80	1	21
T/O, Uncontr. Coll Gnd	Lt wing destroyed, fire in aft fuselage	910217	DC-9-15	CLEVELAND	2	0	0	2	2	0
Abort T/O Gear Off	Eng. Torn off, destroyed by fire	910312	DC-8-62	JFK	0			5	0	0
Uncont Eng, Abort T/O	Fuel line cut, destroyed by fire	910503	B-727-100	BRADLEY FLD	0	0	3	3	0	0
Abort T/O, Hard Ldg	Rear spar crack ruptured tank	920730	L-1011	JFK	0	1	291	292	0	0
Miss Approach, Cfit	Wing separation, immediate fire	940702	DC-9-31	CHARLOTTE	37	16	4	57	32	5
Uncont. Eng, Cut Fuel Line	Spread quickly, destroyed by fire	950608	DC-9-32	ATLANTA	0	1	61	62	0	0
Prop Fail Off Airport Ldg	Major damage and fire	950821	EMB-120	CARROLLTON	8	13	8	29	0	8
Gear Up Ldg	Small fire cargo area, smoke in cabin	960219	DC-9-32	HOUSTON	0	0	87	87	0	0
Collision On Landing	Major fire, unable to open door	961119	BE-1900	QUINCY	14	0	0	14	0	14
Hard Ldg, Rmg Collapse	Rt wing sep, a/c inverted	970731	MD-11	NEWARK	0	0	5	5	0	0
Cfit On Approach	Major fire, total destruction	970806	B-747-300	GUAM	228	26	0	254	0	
T/O Coll Gnd Controlled	Broke up, destroyed by fire	970807	DC-8-61	MIAMI	3	0	0	3	0	
Aft Cg, Settled, Hard Ldg	Gear collapse, fuel leak, fire	970813	BE-1900C	SEATTLE	0	1	0	1	6	0
Taxi Coll, Eng Separation	Fuel lines broke, nacelle/fuselage fire	981025	ATR-42-300	SAN JUAN	0	0	27	27	Impact	0
Overrun	Wing off, fire in swampy area	990601	MD-82	LITTLE ROCK	11	45	89	145	0	5

NOTE: The last two columns are deaths due to impact and fire.

In the review of fire hazards, specifically noted were the breaking of fuselage fuel lines to aft engines and APUs, wing/pylon separation due to ground or barrier contact and inertial loads, and wing fuel tank rupture. Fire was present in 103 accidents and fuel spilled without fire in 22 accidents. The authors of the Boeing study stated that the greatest potential for improved survivability is in the area of fire-related fatalities.

This Boeing report contains many comments and recommendations for additional crashworthiness research and development, including improvements in the technology, better data collection at accident sites by properly trained teams of crashworthiness investigators, greater use and improvement in computer simulation programs, maintaining and updating testing facilities, additional complete aircraft testing, and research into advanced crashworthiness concepts. It is significant to note that in the year 2000 there are no properly trained teams of crash fire investigators for civil transport accidents, the NASA impact test facility is being considered for disassembly, and no full-scale crash tests of transport aircraft have been done since the CID in 1984.

The report's data was used to establish a range of crash situations that could provide a basis for developing improved crashworthiness design technologies. This report is probably still the best current study of impact scenarios available and should still be used for design studies.

In addition to the Boeing study, Lockheed and McDonnell Douglas were also contracted for similar work. The three reports are summarized in a joint NASA/FAA report [54]. Thomson and Caiafa combined the databases from the three studies and established candidate accident scenarios for future testing. They also "…determined that the most critical event in the crash sequence that caused most fatalities was the release and ignition of fuel creating a fire hazard."

Thomson and Caiafa recommended specific research areas for the greatest potential reduction in fire fatalities and injuries. They are

- Fuel Containment. Increased resistance to tears, ruptures, and punctures. Designing failure points on wing box structures with double-wall tanks at these points. Reduction of the potential for tank explosion using flame arrestor media. Designing fuel transfer/feed lines more resistant to failure and automatic shutoff of fuel flow.

- Tank Rupture. Effects of main gear collapse on tank, including wing contact with ground tearing lower surface. Engine separation and tumbling under wing causing penetration. Fuel spill and electrical arcs at engine/pylon separation.

- Fuel Characteristics. Antimisting fuels and gelled fuels research to continue.

An additional area they covered was floor disruption causing increased trauma injuries. This can be caused by auxiliary fuel tanks in the cargo compartment delivering impact loads from the lower skin directly to the floor beams. This has been noted in test drops (section 3) and is an area of concern in the design of range extension fuel storage.

None of the above areas have been addressed by regulatory changes to 14 CFR Part 25.

Frank Taylor of the Cranfield Aviation Safety Centre in the UK has studied the transport fire problem for many years and has produced many excellent reports on the subject (see references 80, 81, 82, and 83).

Mr. Taylor's data indicates that, worldwide in the mid-1990s, there were approximately 600 people killed annually in survivable accidents and about 800 in nonsurvivable accidents. Earlier data had indicated that about 45 percent of the fatalities in survivable accidents were due to fire, but the most recent study reported that cause of death data was available in too few accidents to make any accurate estimate of fire deaths. He also points out in his conclusions in reference 82 that "The overall safety record is sufficiently good to make it very unlikely that any particular safety feature will appear to be cost-effective. Consequently, if progress is to be made, a new way is needed of dealing with such safety features." "Emphasis should be placed on minimizing the disbenefits of potential safety features in order to optimize the net benefit."

Mr. Taylor has also suggested some recommended action areas for postcrash fire prevention. Among them are:

- External camera(s) and cockpit monitor
- Cabin water mist system
- Less flammable fuels
- Passenger smoke hoods
- Fuel tank and fuselage integrity following undercarriage collapse, etc.
- Greater protection of fuel/hydraulic lines passing through the fuselage
- Onboard extinguishing systems in equipment bays

4.3 SPECIFIC ACCIDENTS.

In 1985, a British B-737 in the U.K. was involved in a fire during the takeoff roll when an engine failure led to a rupture of a fuel tank access cover. A large fire began before the aircraft came to a halt. All injuries and fatalities were due to fire. The British report of this accident contains many recommendations regarding the minimization of fire hazards, and this led to many changes in the standards for interior materials and improved tank cover plate requirements.

The following recommendations were made in that report that relate to this study. (There were other recommendations regarding firefighting, etc., that are not included herein.)

4.2 Research should be undertaken into methods of providing the flight deck crew with an external view of the aircraft, enabling them to assess the nature and extent of external damage and fires.

4.5 Emergency equipment for use by cabin crew during an emergency evacuation should be stowed at the cabin crew stations.

4.10 A review of the approval of the cabin configuration as it existed on G-BGJL should be conducted, with particular reference to the following features of that configuration:

i) The restricted view of the passenger cabin afforded the forward cabin crew when seated.

ii) The forward aisle restriction created by the floor to ceiling forward galleys.

iii) Access to the overwing exit where the presence of row 10 seats appeared to conflict with the British Civil Airworthiness Requirements. It is recommended that all row 10 seats be removed.

The approval of other configurations on Boeing 737 and other types should also be reviewed with the intention of addressing any similar problems.

4.11 A review should be conducted to examine the adequacy of existing British Civil Airworthiness Requirements relating to 'unobstructed access' to exits and these updated where necessary to take account of modern high density seating configurations.

4.18 A thorough review should be undertaken into techniques for extinguishing fires inside the passenger cabins of public transport aircraft, with a view to rectifying the current deficiencies in airfield firefighting capability when dealing with internal fires.

4.19 Onboard water spray/mist fire extinguishing systems having the capability of operating both from on-board water and from tender-fed water should be developed as a matter of urgency and introduced at the earliest opportunity on all commercial passenger carrying aircraft.

4.20 The balance of effort in aircraft fire research should be restored by increased effort directed towards fire hardening of the hull, the limitation of fire transmission through the structure and the prevention of structural collapse in critical areas. Short term measures should be devised for application to existing types but, in the long term, fire criteria should form a part of international airworthiness requirements.

4.21 A requirement should be introduced to ensure that existing external fuel tank access panels which are vulnerable to impact from engine or wheel/tire failures on aircraft in service are at least as impact resistant as the surrounding structure. The potential risk of damage from debris impacts should be addressed in future by appropriate design requirements covering debris ejection from engines and/or impact strength requirements for the airframe.

4.24 The Civil Aviation Authority should urgently give consideration to the formulation of a requirement for the provision of smokehoods/masks to afford passengers an effective level of protection during fires which produce a toxic environment within the aircraft cabin.

4.25 The proposed requirement for cabin crew smokehood protection be extended to include training for crew donning and use during aircraft emergency evacuations associated with a fire and/or smoke threat during the evacuation.

4.26 The applicable regulatory requirements for aircraft cabin materials certification should be amended at the earliest opportunity to include strict limitations of smoke and toxic/irritant gas emissions.

4.27 A research program should be undertaken to establish the effect of water mist/spray extinguishing systems on the toxic/irritant constituents of fire atmospheres.

4.28 The existing regulatory requirements governing the Evacuation Certification of public transport aircraft should be reviewed and amended to include:

i) A demonstration of an acceptable evacuation time when the cabin is evacuated using half the total number of exits, disposed towards one end of the cabin; that end being chosen which represents the greatest restriction to passenger egress.

ii) Simulation of a defined dense smoke atmosphere within the cabin, existent from the initiation of the evacuation until its completion.

iii) All other sub-testing associated with cabin evacuation, including passenger aisle flow, the identification of exits and aperture egress rates, upon which design and configuration certification decisions are based, be conducted in the same simulated smoke atmosphere.

In the 15 years since this accident, only a few of these items have been adequately addressed.

Recent accidents with fire significance:

- Kegworth, Leicestershire, U.K., B737-400, Jan. 8, 1989

  The aircraft was flown into the ground with both engines off. The fuselage broke into three sections, with the nose section going up an embankment. The center section, with wings, remained upright. The aft section broke off aft of the wing trailing edge and buckled to the right. All the landing gear broke off at their design separation points; both engine pylons separated at points different than their design points; and wing leading edges were damaged by trees. No fuel tanks were ruptured. A fire occurred at the left engine and was burning after impact. It began to flare up just as fire fighters arrived and extinguished it. There was a very rapid response due to early notification of the impending emergency. Of the 126 persons onboard, 47 died of impact injuries. Many more were trapped and injured and would have died had there been a significant postimpact fire.

- Carrollton, GA, Atlantic Southeast Airlines, EMB-120RT, August 21, 1995

  The loss of a propeller blade in flight resulted in a forced landing off airport. The aircraft broke up, 3 of the 4 wing fuel tanks were ruptured and a severe fire began about 1 minute after the aircraft came to a stop. Electrical arcing sounds were heard by the survivors. The fire involved the forward cabin, killing seven passengers and the captain. The first officer tried to hack open his side window with a fire axe but was unable to do so, and the wooden axe handle was broken during the attempt. He was rescued by crash/fire/rescue personnel after the cabin fire was extinguished.

  Some passengers reported their clothes were saturated with fuel. There was no analysis of how this occurred, or of any fuel lines that may have been broken in the cabin or center wing area.

  The only recommendation regarding fire issues was to study the function of the fire axe and provide a Technical Standard Order (TSO) as necessary.

- East Grandby, CT, American Airlines, MD-83, November 12, 1995

  This aircraft hit trees on a ridge prior to landing short in the localizer antenna area, ending up on the runway. There was no fire damage to the fuselage but some minor fire evidence in the right engine. No fuel leaks were reported but hydraulic lines in the landing gear area were broken. There was no analysis of how severe these leaks were or why there was no fire.

- LaGuardia Airport, NY, Delta Air Lines, MD-88, October 19, 1996

  This aircraft landed short in the approach light area, the main landing gear separated and it skidded along the runway. A fuel leak was noted due to a puncture in the right wing tank, causing the loss of about 600 gallons of fuel. There was no fire. There was no analysis of why there was no fire nor of hydraulic leaks associated with the loss of the landing gear.

- Quincy, IL, United Express Airlines, Beech 1900C and Beech A90 collision on runway, Nov. 19, 1996

  In this accident, the impact forces were at a survivable level and all persons onboard both aircraft were killed by the fire which began immediately upon contact. There was no firefighting staff at the airport at the time of the accident, but rescue attempts began almost immediately. The airstair door of the 1900 was jammed so that witnesses who arrived at the aircraft while the pilot was still alive could not open it. There are recommendations in the report regarding door jamming and airport firefighting capabilities, but nothing on fire prevention or crashworthiness.

- Newark, NJ, Federal Express, MD-11, July 31, 1997

  This aircraft experienced a hard landing, causing the right main landing gear to fail upwards, fracturing the right wing. Fire evidence began along the runway about 2000 feet from the wreckage. The aircraft rolled almost inverted after the wing failure. All three engines were separated from the airframe, but no details are provided as to where or how any fuel and hydraulic lines separated or released fluid.

  The fire section of the report states, in its entirety

  "A fuel-fed fire erupted on impact."

  The crash/fire/rescue crew reported that as they approached the aircraft flames were venting from the aft section of the fuselage. There is no information as to the source of fuel in that area. Although the right wing tank was compromised and may have provided most of the fuel for the fire, the line to the aft engine and auxiliary power unit (APU) also was broken but no details are provided that would help locate a self-sealing fitting in an appropriate location.

  There were no recommendations regarding fire safety in this report.

- Guam, Korean Air, B-747, August 6, 1997

  In this accident, a Controlled Flight Into Terrain (CFIT) accident, there were 26 survivors of the 254 persons onboard. The report (NTSB/AAR-00/01) does not give the cause of death information needed to separate the trauma deaths from thermal deaths, but the impact into a hill severely damaged the aircraft, probably rupturing all fuel tanks, and there was a large fire. Some survivors were burned, and one reported that a "ball of flame was going down the center of the airplane" and that passengers were screaming and calling for help (NTSB report, page 45). There were no recommendations in this report regarding fire protection or prevention.

- Miami, FL, Fine Airlines, DC-8-61, August 7, 1997

  This aircraft was out of trim on takeoff and had an uncontrolled impact with the terrain beyond the end of the runway. All four engines struck the ground and separated from the pylons, but no details are provided as to fluid line separations. The airframe was extensively damaged and much was consumed by fire.

  The fire section of the report states, in its entirety

  "A fuel-fed fire erupted on impact."

- Little Rock, AR, American Airlines, MD-82, June 1, 1999

  In this overrun accident, the aircraft departed the end of the runway and impacted the approach light structures while going down a rocky berm to the river level, separating the fuselage into three sections and driving metal bars into the fuselage in several places. The left side of the first class section was torn off and the seats on that side were ejected. There were 11 fatalities (six from trauma and five from fire) among the 145 persons onboard. Fire broke out over the center section tank where the fuselage had separated, and survivors exited both forward and aft of that point. Fire ultimately consumed the upper fuselage aft of the wing leading edge. The left wing was severely damaged and separated near the root and near the tip. The center section tank was torn open and all the fuel drained out, but the right wing retained its 1000 gallons of fuel. The structures report does not discuss the fuel lines in the fuselage leading to the aft engines. A final report of this accident has not yet been issued, so there are no detailed conclusions or recommendations regarding fire in this accident.

In all of the above reports, there is not enough data to determine whether the installation of frangible self-sealing fittings would have made a difference in the fire situation. There is not enough data on fuel tank failures to give designers information on how those failures might be prevented. There is no mention of auxiliary fuel tanks, whether they were installed or not, and if installed, whether they contributed to the fire.

The recommendations of the SAFER committee (1980) and the Boeing study (1982) for better accident investigation data have not been followed. The NTSB has not made any significant recommendations on fire prevention in the above accidents. While survival factors get attention, and have their own section in the NTSB investigation, fire prevention and detailed fire analysis do not.

5. CURRENT FUEL SYSTEMS.

5.1 AIRFRAME DESIGN CATEGORIES.

Transport aircraft certified under 14 CFR Part 25 include all aircraft over 12,500 lbs plus jet-powered aircraft of any weight. Many aircraft models operate at a variety of weights and fuel tank configurations, depending on specific model, so there may be some overlap in the following subdivisions which are established for use in this report:

Category	Description
A	Under 60,000 #, all engines on the wings
	A.1 High wing, all engines on the wings (ex. DHC7 and 8)
	A.2 Low wing, all engines on the wings (ex. BE1900)
	A.3 Low wing, engines on aft fuselage (ex. Bombardier CL600)
B	61,000 to 100,000#
	B.1 High wing, all engines on the wings (ex. BA146)
	B.2 Low wing, all engines on the wings
	B.3 Low wing, engines on aft fuselage (ex. ERJ145, F28)
C	Over 100,000#, all low wing
	C.1 All engines on wing (ex. B737, B747, B777)
	C.2 All engines on aft fuselage (ex. MD81, B717, B727)
	C.3 Engines on wing and aft fuselage/tail (ex. L1011, MD11)

Table 5-1 lists many, but not all, current aircraft with their approximate takeoff gross weight, type of engine, wing configuration, location of manufacturing. It must be noted that this is a time of rapid expansion of air carrier fleets, especially in the regional markets. New and derivative aircraft are being announced almost monthly. Some aircraft models are being stretched with attendant gross weight increases, so that the classes outlined herein are very arbitrary and some aircraft types may overlap categories.

5.2 FUEL SYSTEM DESIGNS.

In a study prepared in 1982 for the AMK program, commercial aircraft fuel systems were reviewed for potential component problems using gelled fuels. This report [84] contains detailed diagrams of many typical (basic) fuel systems, including line sizes, types and locations of pumps, check valves, and vent and scavenge systems.

Detailed data of this type will not be repeated herein, as systems can vary even within specific models of aircraft depending on customer configurations, engine choices, and addition of auxiliary tanks. However, the basic concepts of fuel storage and distribution are similar in all aircraft.

TABLE 5-1. CURRENT AIRCRAFT

Aircraft	Max Weight	Engine	Wing	Mfg.
EMB110	12500	TP	L	B
D228-212	14110	TP	H	E
J31	15212	TP	L	E
BE1900D	16950	TP	L	U
SH330	22000	TP	H	E
NORD262A	23490	TP	H	E
SA227-III	24500	TP	L	U
EMB120ER	26600	TP	L	B
SH360-300	27000	TP	H	E
S340B	28800	TP	L	E
D328	30842	TP	H	E
ATR42-500	41005	TP	H	E
DHC7	44000	TP	H	C
EMB145ER	45414	J	L	B
FOKKER 50	45900	TP	H	E
HS748-2A	46500	TP	L	E
ATR72-212	49603	TP	H	E
SA2000	50260	TP	L	E
ATP	50550	J	H	E
CRJ200	51000	J	L	C
DHC8Q400	63750	TP	H	C
F28-4000	75240	J	L	E
CRJ700	82500	J	L	C
BAE146-200	93000	J	H	E
F28-0100/FOKKER 100	101500	J	L	E
B737-200	117000	J	L	U
B717-200	121000	J	L	U
A318	145200	J	L	E
MD82	149500	J	L	U
B737-700	153000	J	L	U
DC9-88	160000	J	L	U
A320/319/321	169000	J	L	E
B737-800	172500	J	L	U
B727-200	209500	J	L	U
B757-200	220000	J	L	U
B720	234000	J	L	U
B707	335000	J	L	U
A310	346125	J	L	E
DC8-63	355000	J	L	U
A300	370000	J	L	E
B767-300	380000	J	L	U
CONCORDE	408000	J	L	E
A330	467000	J	L	E
L1011-500	510000	J	L	U
A340	553360	J	L	E
DC10-30	580000	J	L	U
MD11	625000	J	L	U
B777-300	660000	J	L	U
B747-200	805000	J	L	U
B747-400	875000	J	L	U

ENGINE	WING	MFG
TP = Turbo Prop	H = High	B = Brazil
J = Jet	M = Mid	C = Canada
	L = Low	E = Europe
		U = U.S.

In general, aircraft of all the above types carry fuel in wing tanks, usually integral to the structure. (See figures 5-1, 5-2, and 5-3 for examples of integral wing tank spaces which have been cut open during the process of scrapping the airframe.) In addition, center tanks are used in low-wing aircraft in many cases. Some of these are integral (see figure 5-4 for the aft half of a large aircraft center tank that has been cut open and figure 5-5 for another view of a center tank and wing root fuel spaces) and some have bladder liners (see figure 5-6 for a view of a center tank with openings to the bladders, figure 5-7 for a view inside the bladder compartment, and figure 5-8 showing the aft compartment with a torn bladder). Some high-wing aircraft carry fuel in fuselage tanks over the passenger compartment, rather than in the wings. Figure 5-9 shows this type of tank after a drop test at the FAA test center. The tanks have moved downward into the passenger space and both the forward and aft tanks leaked heavily after a vertical impact which was otherwise survivable. Figure 5-10 shows the bottom of the aft tank with all fuel fittings broken. (This test is discussed in section 3.1.)

In addition to the above configurations, many aircraft have additional tank capacity in the form of fuselage tanks in the forward and/or aft lower baggage areas or in the main cabin area in some cargo and mixed configurations. Most of these are removable auxiliary tanks. Figure 5-11 shows a typical underfloor auxiliary tank as installed for a test at the FAA test center. It is suspended from the main cabin floor and restrained at the bottom from fore/aft movement. It is removable when necessary. This tank leaked fuel after a drop test representing a survivable accident (see section 3.1). Some aircraft may carry as many as five auxiliary tanks in various locations.

In some later model large aircraft (Category C), fuel is stored in integral tanks in the horizontal tailplane. This provides additional fuel capacity and the ability to adjust the center of gravity for lower trim drag during cruise.

Fuel distribution systems for aircraft with all engines on the wings have little or no fuel plumbing in the fuselage except for the center of the wing area. In some aircraft with a dry center bay area, there are large fuel lines through this area between the wings. There may be a line to an auxiliary power unit (APU) in some other part of the aircraft, such as the tail or landing gear well. There may also be a pressure refueling line located somewhere lower in the fuselage for high-wing aircraft. Aircraft with engines on the aft fuselage or in the tail (Categories A.3, B.3, C.2, and C.3) all have fuel lines that typically are routed under the floor of the main cabin from the wing area to the aft fuselage. These lines can be several inches in diameter and contain considerable quantities of fuel at all times. Lines in the pressurized area are shrouded and the shrouds are drained to a safe area. See figure 5-12 for an example of two shrouded fuel lines coming out from below the main cabin floor in the tail cone and routing to two aft-mounted engines.

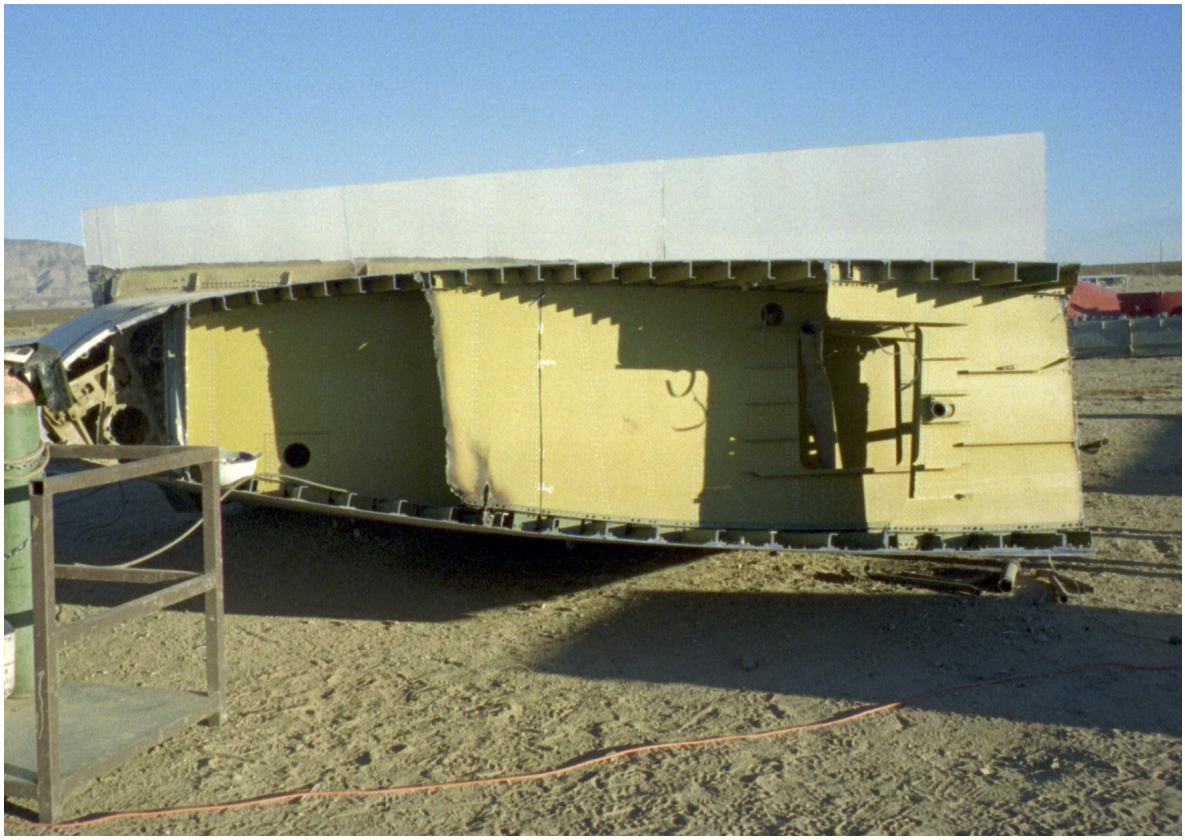

FIGURE 5-1. WING TANK IN ROOT AREA

FIGURE 5-2. WING TANKS CUT OPEN

FIGURE 5-3. WING TANK CUT OPEN

FIGURE 5-4. CENTER SECTION FUEL TANK WITH CABIN FLOOR ABOVE—REAR VIEW

FIGURE 5-5. CENTER SECTION AND WING ROOT TANKS—FRONT VIEW

FIGURE 5-6. WING ROOT WITH OPENINGS TO CENTER SECTION BLADDER TANKS

FIGURE 5-7. INSIDE CENTER SECTION BLADDER TANK

FIGURE 5-8. CUT OPEN CENTER SECTION BLADDER TANK SHOWING SUPPORT LACING

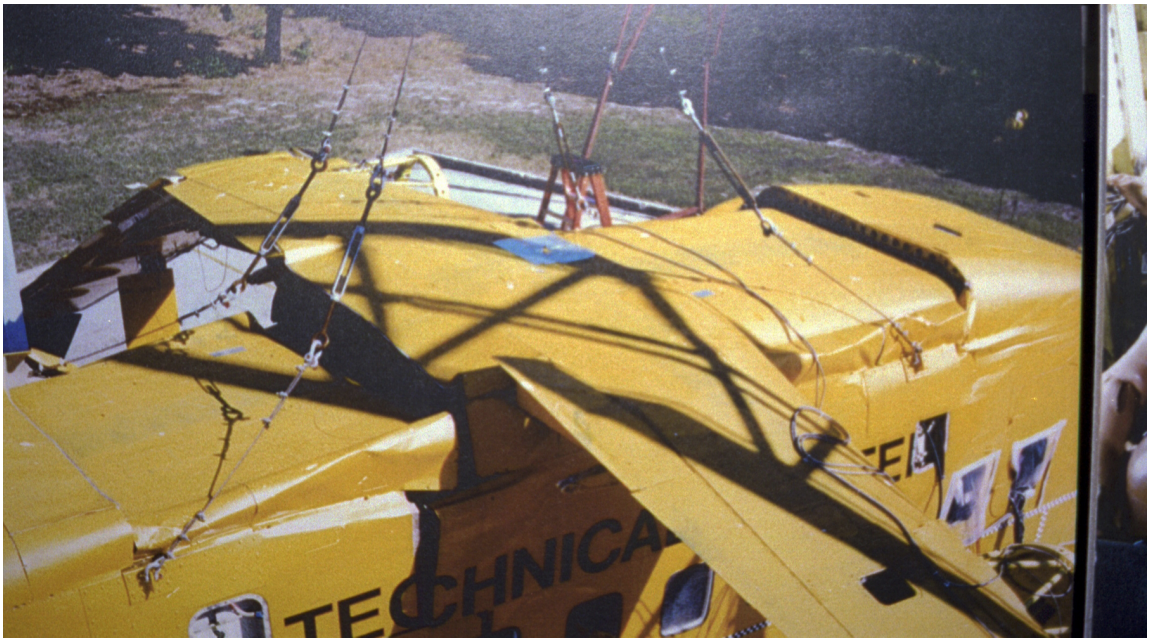

FIGURE 5-9. FUSELAGE FUEL TANKS OVER PASSENGER COMPARTMENT AFTER DROP TEST

FIGURE 5-10. BOTTOM VIEW OF FUSELAGE TANK (FROM FIGURE 5-9) SHOWING FOUR FUEL FITTINGS TORN FROM TANK

FIGURE 5-11. AUXILIARY FUEL TANK IN BAGGAGE AREA UNDER CABIN FLOOR PRIOR TO DROP TEST

These two fuel lines are routed aft through the fuselage through holes in the floor beams of this aircraft. If the floor is disrupted, the lines will likely break because they cannot displace and stretch. In another transport airplane design, the lines are suspended below the floor beams. The designer of that system reports that the lines were tested by forcing them transversely all the way across the aircraft by a ram. They stretched and necked down, but did not leak.

Self-sealing breakaway valves are rarely used in transport aircraft although they have been available for 40 years. The valves are sometimes used in auxiliary fuel systems, such as fuselage tanks. However, this research effort could not find any instances where they are (or were) installed in primary fuel systems, even in areas of known separation such as designed overload disconnection points in engine pylons.

FIGURE 5-12. SHROUDED FUEL LINES FROM UNDER CABIN FLOOR INTO AFT FUSELAGE

Authors of the 1988 FAA report to Congress included the following statement as their principal argument against employing self-sealing breakaway valves in airplanes' primary fuel systems:

> It may be noted that breakaway fittings are used in the fuselage auxiliary fuel system installations of some current narrow-body transport airplanes, but were removed from an installation in a wide-body airplane <u>after a fitting closed inadvertently on the ground due to fuel system structural deflections</u>. [52] (underline added)

The underlined portion of the statement is false. This easily verifiable misinformation has been accepted uncritically for many years. Recent discussions with the fuel system engineer actually involved in the test revealed that, in fact, the fuel line which was to have been connected to the valve was too short, and the mechanic installing it stretched it attempting to force the installation. The valve broke due to excessive tension on the overloaded line. Management then decreed that the valve be removed rather than take the time to redesign its installation properly.

NPRM 85-7A proposed revising standards for Crash-Resistant Fuel Systems in 14 CFR Part 23 airplanes. An aircraft engineering consultant—an FAA-Designated Engineering Representative (DER)—submitted comments in a letter dated Oct. 17, 1989, stating he had "…completed a study of the failure probability of the breakaway valves used on the U.S. Army's UH-1 series helicopter. It was determined that the average failure rate of these components was 2.17×10^{-3}." This misrepresentation was originally created for use in general aviation product liability litigation involving crashworthiness issues. It was derived from U.S. Army spare parts order data, which the commenter alleged to be replacements for failed items, and not from any reported failure data. In fact, no U.S. Army accident has ever been traced to inadvertent closure of a breakaway valve.

False allegations, such as these two examples, could easily have been refuted by minimal research. Instead, they were uncritically accepted as facts and included in official documents, fueling fears of unreliability which have been used to oppose consideration of the valves' use in primary fuel systems. Indeed, there has never been a significant problem documented from using properly installed breakaway valves in U.S. Army or transport aircraft.

Typical fuel usage patterns are to keep fuel in the inner part of the wings as long as possible in order to reduce wing bending moments. In some cases fuel is moved forward or aft to adjust center of gravity for cruise efficiency purposes. Auxiliary tanks are usually pumped into main tanks after some main tank fuel is used. Accidents occurring on or shortly after takeoff often have fuel in all tanks, while accidents occurring on landing may have many empty or nearly empty tanks, some holding hazardous quantities of fuel vapor. Wing tanks will always have fuel in them on landing (except for fuel exhaustion accidents) and will often be the source of spilled fuel. Some operators carry extra fuel to avoid refueling at locations where fuel is short or very expensive, so some landing accidents may occur with much higher quantities of fuel than others.

Aircraft in Category A have thinner skins in the wings than larger aircraft and, thus, are more likely to be damaged on impact. Some of these aircraft also have bladders in some tanks, depending on location in the aircraft. To the knowledge of the authors of this report, there are no cases in which the bladders are of a crash-resistant qualified material, rather, they are only liquid barriers of the thinnest usable material. Some of these aircraft are high-wing types, reducing the likelihood of engine tear-off or wing drag, although in one FAA drop test an engine broke off and the wings broke downward at survivable impact levels. Some high-wing aircraft have pressure refueling connections on the landing gear fairing.

Aircraft in Category B have stronger wing skins than Category A aircraft, but also carry larger amounts of fuel in the wings. As wing design becomes more complex, for example, with leading- and trailing-edge lift devices, the simple box structure of the wing tank space is made

more complicated. For example, Figure 5-13 shows boxlike structures from a wing-forward spar web back into the fuel space to permit the leading-edge devices to retract into the fuel storage area. Figure 5-14 shows the same area from the front of the wing spar. This complex structure increases the likelihood of compromising the tank during accidents if the leading-edge devices are pushed back into the wing irregularly.

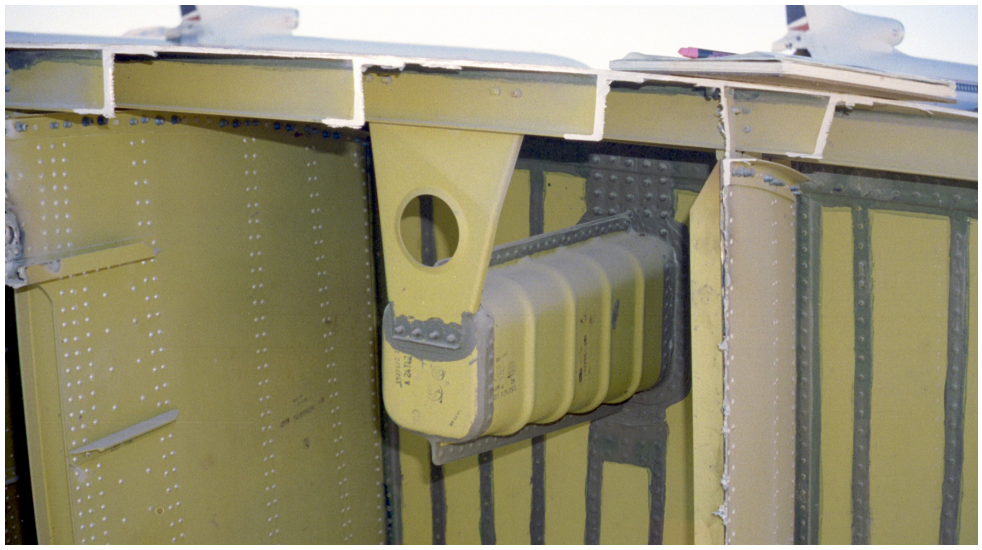

FIGURE 5-13. POCKET INTO FORWARD WALL OF WING TANK TO ALLOW LEADING-EDGE DEVICE RETRACTION

FIGURE 5-14. LEADING-EDGE DEVICE RETRACTING INTO POCKET IN WING FUEL TANK

Category C aircraft have the strongest skins and wing structure and, therefore, are more likely to remain intact during survivable accidents, but in partially survivable crashes, they also have the most fuel and are likely to have the most passengers, making the risks of postcrash fire more

significant. The use of tailplane fuel tanks in this category also provides the potential of spraying fuel down on the wreckage during the accident sequence if the horizontal tail is impacted or over-stressed during the event. Some of these aircraft have a dry center wing section with fuel lines crossing between the wings.

One of the many important aspects of preventing fuel leaks in survivable accidents is to prevent fuel leakage when the landing gear is torn off during the impact sequence. This has happened often in the past [79]. Many times fires have occurred, even though 14 CFR Part 25.721 requires that gear failure not release hazardous quantities of fuel. In addition, 14 CFR Part 25.994 requires protection of the fuel system in wheels-up landings.

Most transport aircraft use pressure-feed systems where pumps in the tanks deliver fuel to the engines under pressure. This is especially common in low-wing aircraft. Some systems use suction-feed and/or gravity-feed systems. This means that, in most accident situations, there will be pressurized fuel lines in various locations in the aircraft. It also requires wiring to the pumps, which is often routed through sealed plumbing lines within the tank. Figure 5-15 shows the routing of fuel pump wiring inside an integral tank and figure 5-16 shows the same area on the other side of the tank wall. Figure 5-17 is a pump in an integral wing tank. Since the pumps need to be on the bottom of the tanks, they are in vulnerable locations for impact with the ground. (See figure 5-18 for a pump compartment, and figure 5-19 for a lower wing surface with openings for pumps and access ports.)

Fuel quantity measuring systems are always needed, and some systems use exposed wiring inside the tanks (see figure 5-20).

FIGURE 5-15. ELECTRICAL AND PRESSURE LINES FOR FUEL PUMP INSIDE TANK WALL

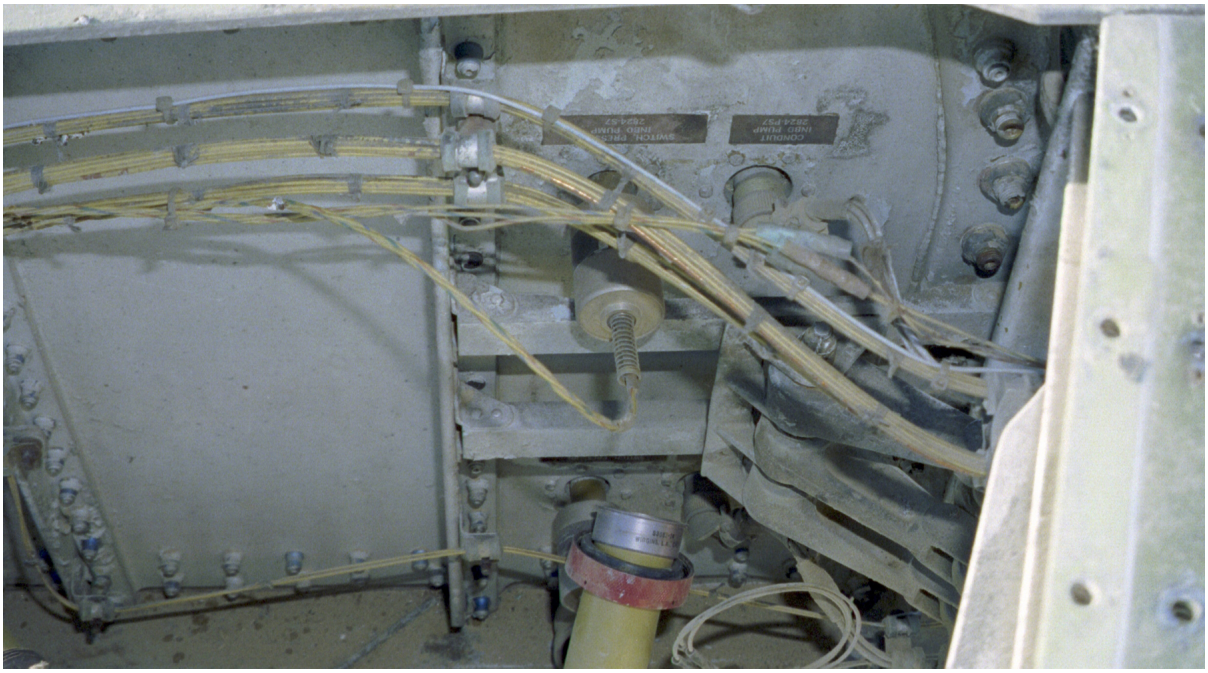

FIGURE 5-16. OUTSIDE FUEL TANK WALL FROM FIGURE 5-15 SHOWING ELECTRICAL CONNECTION AND PRESSURE TRANSDUCER

FIGURE 5-17. FUEL PUMP AND WIRING INSIDE WING ROOT TANK

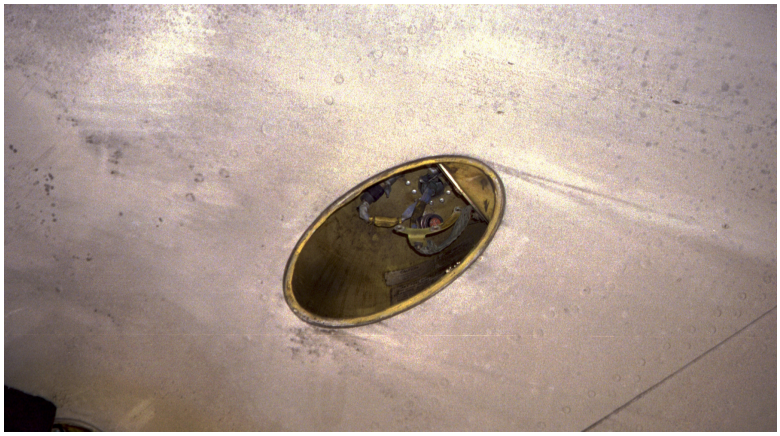

FIGURE 5-18. ACCESS FROM WING LOWER SURFACE TO FUEL PUMP CAVITY

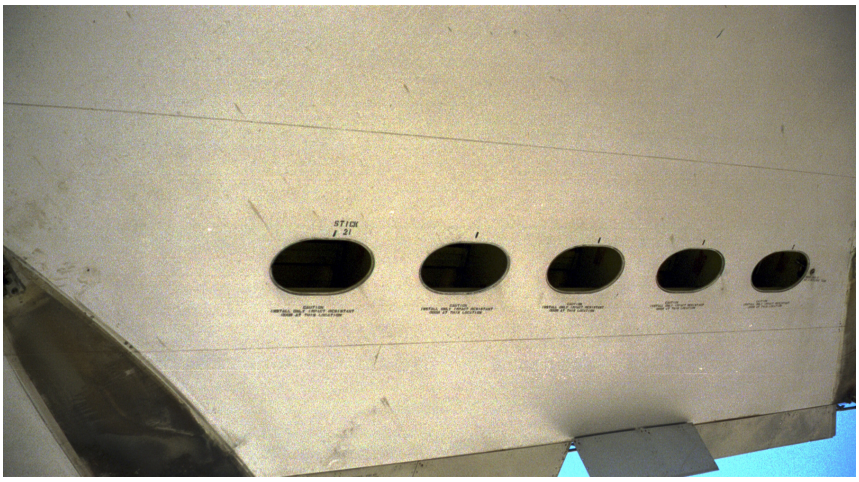

FIGURE 5-19. WING LOWER SURFACE WITH PUMP OPENINGS AND ACCESS OPENINGS

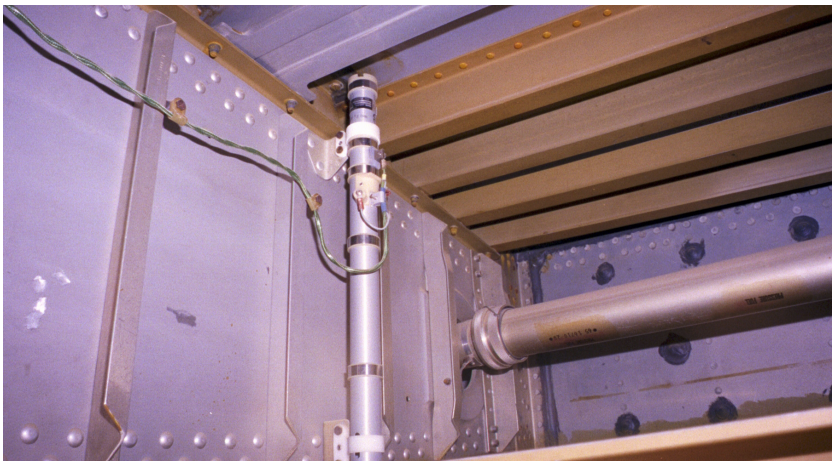

FIGURE 5-20. FUEL QUANTITY SENSOR AND WIRING INSIDE WING FUEL TANK

The above information is not new to aircraft designers or certification personnel. It is provided to set the context for discussions to follow. Categories of aircraft established by the authors of this report are arbitrary, but provide a starting place for discussions of what is possible in CRFS design.

5.3 DESIGN CONSIDERATIONS.

5.3.1 Wing Tank Disruption.

It is clear from airplane crash tests (DC-7, L-1649, and CID) and from accident data that the wings of large transport aircraft can be totally destroyed and/or torn from the fuselage without any significant forces being felt by occupants of the aircraft. It is therefore irrelevant to discuss crash protection of wing fuel tanks in terms of G forces felt by the occupants. Much previous research has looked at various approaches to wing tank protection, such as bladders and individual tanks. In the case of aircraft larger than Category A aircraft, current state-of-the-art knowledge does not offer a practical solution.

One logical approach is to design the wings so that when they are torn from the fuselage or are broken into several sections during the accident, the separations will occur in safe areas, rather than through fuel tanks.

This would require strategically located small dry bays between wing tanks and between the tanks and the fuselage. Also, self-sealing points of separation would have to be designed into the fuel plumbing. Landing gear loads could be carried by the aircraft structure in such a manner that crash loads would cause predictable failures in fuel-free areas, rather than in the fuel system. If the tanks are not breached, the effectiveness of ullage space inerting would be increased and might become cost-effective.

Another area of consideration is the material properties of the wing tank structures. Some materials deform and tear in a ductile manner and some shatter in a brittle manner. The latter results in much greater destruction of the tank with a faster release of fuel during the impact sequence. To the knowledge of the authors of this report, there are no design requirements for wing tank structures regarding these failure modes.

5.3.2 Center Tank Disruption.

The center tank walls on large low-wing transport aircraft are usually a part of the strongest structure of the airframe, carrying the loads between the wings and landing gear and the fuselage. In gear up or gear separation accidents, these tanks can contact the ground and can dig into soft terrain and develop high G loading. They can also be impacted by parts of the forward fuselage and nose gear during forward movement during the crash sequence. Protection of these tanks from rupture or penetration is a significant task, again, in accidents which may not deliver high forces to occupants other than those on seats directly above the tank. In addition, the location of electrical components and equipment bays is often adjacent to center tanks, providing ready ignition sources.

It may be possible to design crash-resistant bladders for some of these configurations. However, this would require changes in the structural design of current aircraft and would most likely have to be part of the original design, not a retrofit to existing designs. Consideration should be given to designs in which the fuselage will not dig into soft terrain, e.g., having lower bulkheads canted aft and/or a structural keel running from the aircraft nose aft toward the wing forward spar.

Separation of the fuselage often occurs just ahead and behind the center wing box section. When fuel is released from the center tank, occupants over the wing can have fire both ahead and behind them. Prevention of center tank fuel loss can provide a significant improvement in crash fire survivability.

5.3.3 Fuselage Tanks.

The October 1999 drop test of an auxiliary tank in the lower fuselage of a B-737 section resulted in a leak due to penetration of the tank by fuselage longerons. This does not violate any requirement in the current regulations. However, this does not meet the requirement of the proposed revision to 14 CFR Part 25.963 (NPRM 89-11A, see section 8.44) which requires that "Fuel tanks within the fuselage contour … be located in a protected position so that exposure to penetration or damage due to fuselage deformation … is unlikely."

It should be clear that such tanks can be located in various places in large transports, such as forward of the wing, immediately aft of the wing, and far aft in the cargo compartment. Each location could see different crash environments in a given crash, just as occupants in different parts of the aircraft can see different crash forces and effects. In addition, testing of these tanks has been confined to a single direction of impact load, rather than the combined effects of real crash loads. A tank in the forward cargo area could see both aft and upward impact loads, as well as possible impact by nose gear components. Again, the loads on a tank in the lower cargo area are likely to be much different than those experienced by occupants above the floor, and to use the loading criteria for occupants for any such installation is unrealistic.

Development of appropriate impact conditions for specific locations of main and auxiliary tanks, including those in the horizontal and vertical tail, should be a task undertaken by fuel system designers. In addition, consideration of the effect of the tank on occupants seated above the tank should be part of the design task since drop tests have shown that the forces on seats above the tank were higher than on seats not located above tanks.

6. STATUS OF CURRENT TRANSPORT CRFS TECHNOLOGY AND IMPLEMENTATION.

6.1 COMPARISON OF MILITARY AND CIVIL CRASH ENVIRONMENTS.

Accidents of large transport aircraft, both civil and military, have been studied for over 50 years. Some of those studies were specifically directed toward crashworthiness, and some of the crashworthiness studies were specifically focused on the postcrash fire issue. Throughout this period, the military studies have been both comprehensive and extensive. Conversely, the civil studies have been more sporadic; however, they have been able to benefit greatly from the knowledge gained from the military effort.

A review of past military and civil studies indicates that there are significant differences between the researchers' definitions of the upper level serious, but survivable accident. The helicopter industry attempts to define its upper level survivable accident as a function of velocity changes over a given time frame and the maintenance of safe space around the occupant throughout the crash sequence. When presented as a function of vertical velocity only, it has been suggested that the upper level for the civil helicopter is around 26 ft/sec. The military helicopter is engineered for greater survivability and can protect its occupants in accidents with vertical impact velocities of up to 42 ft/sec or more and resultant velocities of 65 ft/sec. or more, depending on whose study is being reviewed. Efforts to correlate similar civil and military data for large transport aircraft is currently not possible because of the lack of necessary accident data.

Military and civil researchers tend to think that their respective aircraft as being different from those of the other group. While this is true to some extent, many military aircraft have civil counterparts. It is generally believed by the civil sector that, because their aircraft fly different missions, they crash differently. It is the opinion of the authors of this report that the crash differences are not as great as generally believed by the civil sector. Whichever opinion is correct, the real issue is that there is no clear understanding of the actual civil and military large transport aircraft crash scenarios, because insufficient data has been collected to support comprehensive conclusions.

The overall intent of crashworthiness integration into a given aircraft design is to save lives. Charts, such as those shown in figures 6-1 and 6-2, can quickly put the crash survivability issue into perspective. Enlarging the survivability segment is an obvious goal. Although the actual segment sizes portrayed on the charts are for illustrative purposes only, charts such as these need to be developed from actual crash data to focus research efforts toward saving more lives.

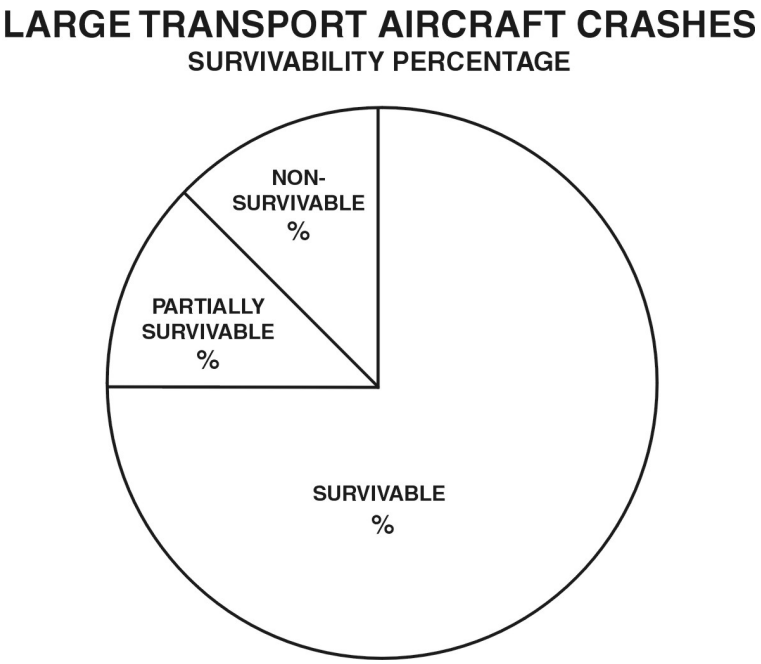

FIGURE 6-1. PERCENTAGE OF ALL LARGE TRANSPORT AIRCRAFT CRASHES THAT ARE SURVIVABLE, PARTIALLY SURVIVABLE, AND NONSURVIVABLE
(Segment sizes are for illustrative purposes only and are not based on actual data.)

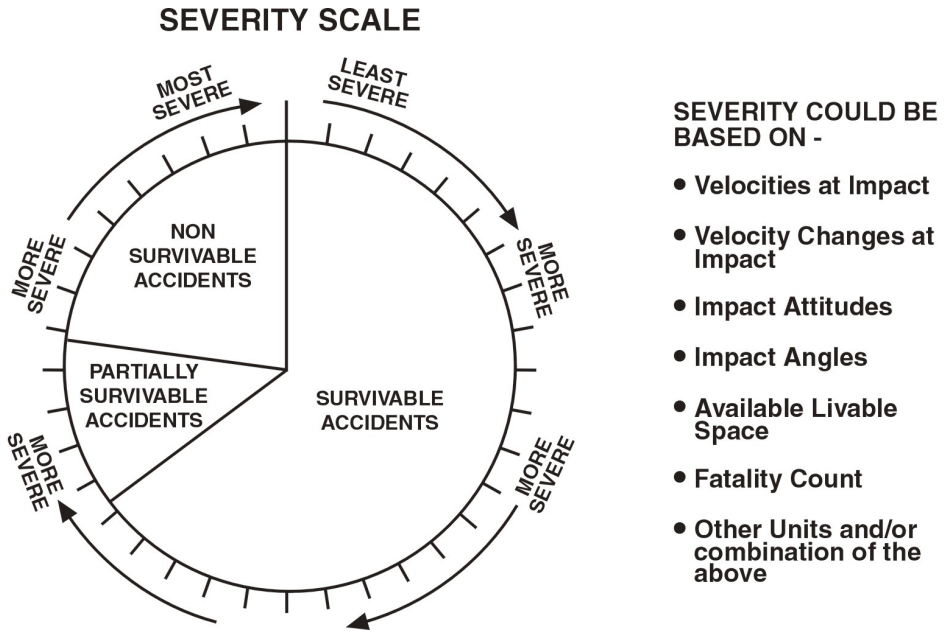

FIGURE 6-2. SEVERITY SCALE OF ALL LARGE TRANSPORT AIRCRAFT CRASHES
(Segment sizes are for illustrative purposes only and are not based on actual data.)

Both the military and the civil sectors have endeavored to design sufficient crash resistance into their respective aircraft to enable them to state that their aircraft are capable of protecting occupants from the anticipated crash loads defined in applicable FARs and military requirements. While this statement conveys that a level of protection exists, it does not give any indication of the percentage of accidents that is protected. The 95th percentile upper limit survivable accident is one of the units of measurement used by helicopter designers when discussing the relative crashworthiness level of their helicopters. No such unit of measurement has been developed for large transport aircraft. The 95th percentile upper limit survivable accident, simply stated, means that 95% of the survivable accidents are of this severity or less. It does not indicate what percentage of all accidents is survivable.

Survivable accidents as a percentage of all accidents depends on the crash resistance of the airframe and the level of protection afforded by the seats and restraint systems, as well as the fuel system. Before aircraft designers can develop significant crash-resistant improvements, they must think of survivable accidents* in terms of human tolerance levels, and not in terms of the number of accidents in which people are killed. The two most commonly used methods of determining survivability are counting the dead and determining the G/time histories known to be survivable coupled with the maintenance of livable space throughout the entire crash sequence. It has been theorized by researchers attempting to define the "survivable accident" that a positive correlation exists between these two methods. This correlation, however good it may be, does little to help the aircraft designer because defining survivability by using a body count rarely yields sufficient engineering data to permit the design of retrofit kits for the existing fleet, let alone the design of new aircraft for which there is no accident data available.

Some researchers who have studied accident severity (relative to human survival in elevated G versus time environments) have concluded that velocity in the vertical direction, as opposed to the longitudinal or lateral direction, is the most life threatening, because vertical velocity is reduced to zero so quickly during most ground impacts that high G forces are transmitted to the occupants. The authors of this report agree that vertical forces are a major threat but not to the exclusion of longitudinal forces. This is especially true when one considers that the longitudinal velocity, which is usually the higher of the two, combines with the vertical velocity to produce the actual crash forces that are transmitted to the occupants and to the fuel system during the crash impact and slide out.

Longitudinal velocity usually transmits lower G forces to the aircraft occupants because the aircraft takes longer to stop in the longitudinal direction. While this lower G environment is favorable from the standpoint of the occupant, it creates two additional major threats to the fuel system.

First, when portions of the aircraft start to slow down in the longitudinal direction, they are often brought to an abrupt halt by contacting heavy or unyielding objects such as automobiles, telephone poles, stumps, and rocks. The localized G forces generated by these abrupt stops are

* A survivable helicopter accident, as defined by the U.S. Army, the NTSB, and by crash survivability researchers in the field, is an accident in which the forces transmitted to the occupant through the seat and restraint system do not exceed the limits of human tolerance and in which a safe space around the occupant is maintained throughout the entire crash sequence.

usually far greater than those transmitted to the occupants in both the longitudinal and vertical direction. If part of the fuel system is located in these areas (e.g., the front or bottom of the aircraft), it will experience these higher, localized forces. Unless the entire fuel system is located away from these anticipated impact areas, it must be designed to withstand much higher G levels than the occupants. Thus, overall aircraft velocity change data cannot be used directly as criteria for CRFS design. Additionally, any attempt to establish different design and/or test criteria for civil versus military CRFS should be based on detailed accident studies and extensive testing, not just on differences in overall aircraft velocity changes during the crash sequence.

Second, extensive structural displacement occurs during the wreckage slide out, and this displacement literally pulls the fuel system apart. The CRFS designer must factor in this displacement by allowing the fuel system to move separately from the structure without significant leakage. Where the displacement is not expected to be large, frangible attachments and flexible, extra-length fuel lines might suffice. In areas of extensive structural displacement, the CRFS designer must either (1) move the fuel system out of the area or (2) design in "safe failure points" by using self-sealing breakaway valves, etc. In both cases, the fuel system components must also be able to withstand all the crash forces likely to occur in their locations.

6.2 CRASH-RESISTANT FUEL SYSTEM DESIGN ISSUES.

The principal objective of implementing CRFSs in aircraft is to protect the occupants from injuries caused by postcrash fire. Properly designed and configured CRFSs can (in order of preference) (1) prevent the onset of a postcrash fire by containing all fuel and other flammable liquids; (2) delay the onset or minimize the severity of postcrash fire by minimizing spillage or directing it away from potential ignition sources; or (3) isolate a postcrash fire from impinging on occupied areas of the airframe long enough for occupants to make their way to safety.

The predominant criterion for aircraft designers is to determine the level of severity of a crash that must be accommodated by the CRFS. The traditional large transport aircraft approach has attempted to provide a fuel system that will survive the crash loads specified in the FARs without a dangerous spillage of fuel. A CRFS must safely survive crash environments in which extensive structural displacement occurs, such as often occurs during accidents with high longitudinal speed or impacts. As straightforward as the objective appears, it is difficult to achieve in practice unless the designer has sufficient knowledge and data available to define the approximate crash parameters of "survivable" accidents in the type of aircraft in question. In addition, advances in other areas of crash survivability, e.g., seats and restraints that attenuate crash forces transmitted to occupants, have allowed occupants to survive in accidents that are severe enough to totally destroy the aircraft. It is, therefore, not unreasonable to require the CRFS to safely contain fuel throughout the entire severe crash sequence.

CRFS designers for helicopters and light airplanes routinely use occupant survivability data as their criteria for fuel system design. This data, in the form of loads generated by the velocity changes experienced during 95th percentile survivable crashes, is based on innumerable, in-depth accident investigations and extensive full-scale crash tests. The vertical velocity changes experienced by these small aircraft as determined from accident data, are shown in figure 6-3. This figure shows that the 95th percentile survivable crash has a vertical velocity change of 42 ft/sec in the occupiable area during the major impact.

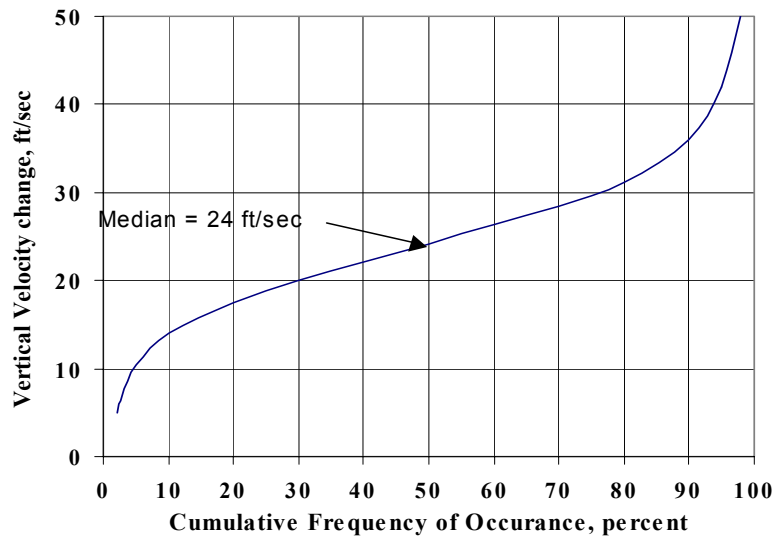

FIGURE 6-3. VERTICAL VELOCITY CHANGES FOR SURVIVABLE ACCIDENTS IN SMALL AIRCRAFT (Rotary and light fixed wing)

Unfortunately, these criteria cannot be transferred directly to transport airplanes because of their larger size. Indeed, even defining "a survivable accident" for transport airplanes in the context of velocity change during impact is questionable. The definition of a survivable impact ultimately relates back to human tolerance levels to applied forces, accelerations, and their durations. If the aircraft and the occupant both experience similar velocity changes during a crash, then crash survivability can be defined by the aircraft response in its occupiable area, at or near the aircraft center of gravity. This is the case with small aircraft, such as helicopters and light airplanes. This principle is illustrated for small aircraft in figure 6-4. The center of gravity (cg) of the aircraft shown in figure 6-4 is denoted by the small checkerboard circle. The large cross-hatched areas fore and aft of the cg encompasses the occupant area. As can be seen in the figure, the occupant area in the small aircraft is not large enough or far enough away from the cg to experience significant differences in velocity changes during an accident. Thus, the velocity changes and accelerations seen at the aircraft cg are reasonably valid throughout the occupiable area.

On the other hand, the passenger compartment in a large transport airplane is much larger and a significant number of occupants are located a considerable distance away from the airplane's cg. They are outside the area of the airplane which can be expected to have similar velocity changes to those at the cg during impact. The cross-hatched area A of figure 6-4 indicates an area that will likely experience similar velocity changes as the cg, whereas cross-hatched area B will likely have significantly different velocity changes during the accident. KRASH analysis has shown that sink velocities over 22 ft/sec would likely break the fuselage shell and that 22 to 25 ft/sec might be a reasonable survivable limit for the overall passenger compartment of large transport aircraft (see section 2.3.4). This value is considerably lower than the 42 ft/sec vertical velocity change for the 95th percentile survivable accident in the smaller aircraft.

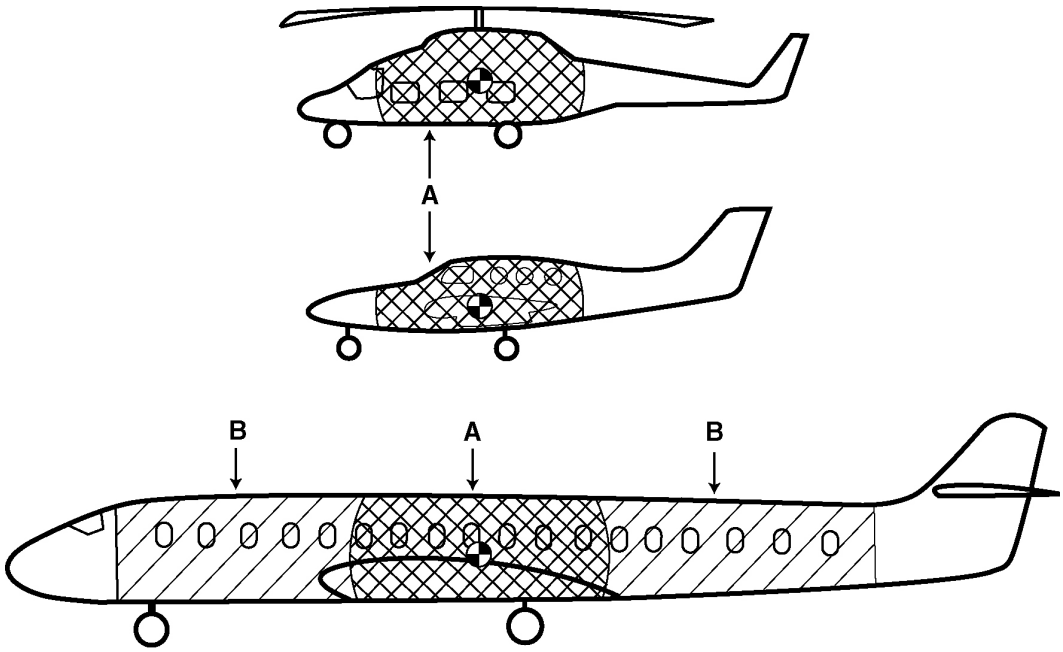

FIGURE 6-4. OCCUPIABLE AREA SIZE AND LOCATION RELATIVE TO THE CENTER OF GRAVITY IN LARGE AND SMALL AIRCRAFT

Should the designer then use 25 ft/sec vertical velocity change as one of the criteria for the 95th percentile survivable accident for transport airplanes? No! Using this value presupposes that the velocity changes and accelerations are similar throughout the entire passenger compartment enclosed by area B in figure 6-4. However, this supposition is not valid. It was previously shown that the area over the center wing is stronger than the fore and aft sections of the fuselage. Drop tests have shown that vertical velocities up to 30 ft/sec are readily survivable for occupants near the center section (see section 3.2). In addition, passengers seated in the fore and aft sections of the aircraft may experience widely diverse impact conditions depending on the dynamics of the specific accident.

At the present time, there is no single value which will adequately define the vertical velocity change of the 95th percentile survivable accident for large transport airplanes. If the values of 20-25 ft/sec are used by the CRFS designer, there is a grave danger that the CRFS will fail at levels well below the survivable range of many of the airplane occupants and expose the surviving occupants to a crash fire. There is an urgent need to define the velocity changes which are survivable throughout the aircraft during typical transport airplane crashes. The time and effort must be spent to define how these impact conditions should be measured and to gather the necessary data. Only then can the CRFS designer be confident that the fuel system will accomplish its intended purpose of protecting the occupants from fire up to the survivable limits of transport airplane accidents.

In the April 2000 FAA study titled "Benefit Analysis for Aircraft 16-g Dynamic Seats" [60], R.G.W. Cherry and Associates, Ltd. defines the methodology and rationale for a new mathematical model called a "Survivability Chain:"

Accident Scenarios

The severity of hazard in an accident can vary markedly throughout the aircraft. Experience has shown that considering occupant injuries on a whole aircraft basis can be misleading when assessing the effects of survivability factors. It is therefore necessary to divide the aircraft into scenarios.

A scenario is defined as *"That volume of the aircraft in which the occupants are subjected to a similar level of threat." (emphasis in the original).*

A similar level of threat need not necessarily result in the same level of injury to occupants. The extent of injury sustained can vary with numerous factors including age, sex, adoption of the brace position, etc. Furthermore, the threat to occupants can vary over relatively small distances. For example, a passenger may receive fatal injuries because of being impacted by flying debris, and a person in an adjacent seat may survive uninjured. Dividing accidents into scenarios provides a more meaningful basis on which to analyze accidents than considering the whole aircraft due to the marked variation in survival potential with occupant location.

Survivability Chain

A mathematical model, known as a Survivability Chain (see figure 6-5) … enables assessment to be made of the overall effect on survivability factors, taking into account injuries that may be sustained by occupants.

… Where sufficient data are available, each accident is divided into scenarios and a Survivability Chain constructed.

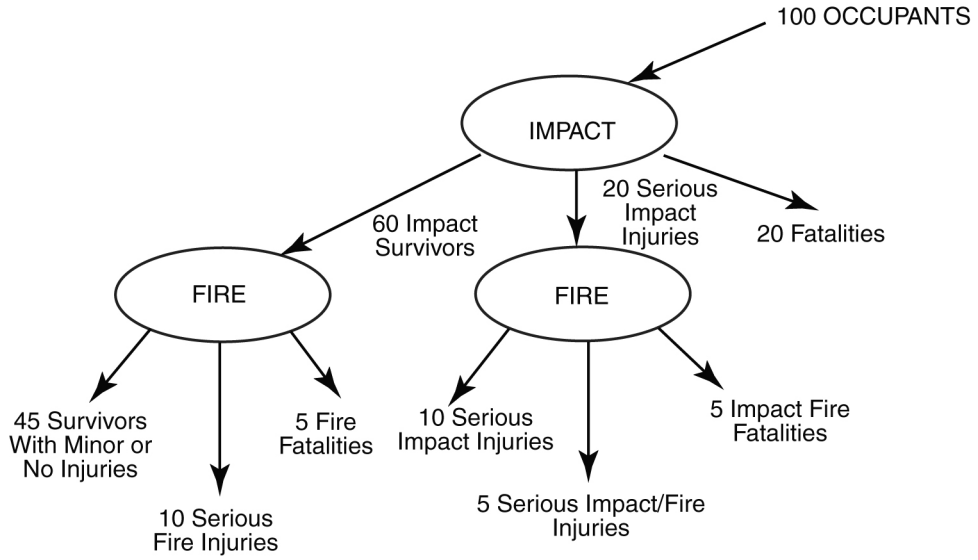

FIGURE 6-5. EXAMPLE OF SURVIVABILITY CHAIN FOR AN ACCIDENT SCENARIO
(From reference 60)

The Survivability Chain enables analysis of the effects of specific improvements to survivability factors on each scenario (see above definition) which might be present within the passenger compartment. For each scenario, a numerical assessment can be made of the effects of changes on numbers of fatalities and injuries. The Cherry report continues:

> Whilst it is recognized that the models are not perfect representations of an accident nor are the statistical assessments totally accurate, they will provide a better assessment of the likely effects of improvements to survivability factors that would otherwise be derived from a simple estimate of the resultant change in number of survivors.

Applying Survivability Chain–or similar–analysis methodology to the effects of postcrash fires can improve the robustness of data on which decisions are made for pursuing new initiatives toward minimizing occupant risk. For example, current ad hoc investigation techniques minimize the likelihood of recognizing patterns of evidence which might identify inherent design factors which increase risk. Standardized investigation methodologies are required to enable valid statistical identification and follow-up of existing survivability factors and their improvements.

The CRFS must be designed within the constraints of aircraft performance requirements and within the boundaries of numerous rules and regulations. Standards, regulations, and specifications have been established for CRFS design for both civil and military helicopters. Many of these standards are directly applicable to large transport aircraft, the subject of this study, and are discussed throughout this report.

The acceptable crash fire environment must also be defined. While complete elimination of postcrash fire is the surest way to prevent fire injuries, it is sometimes possible to prevent injuries even if a postcrash fire occurs by minimizing the size of the fire and isolating it from the occupants long enough for them to escape. The designer can estimate the reduction of the postcrash fire hazard of various CRFS modifications by using appropriate hazard analyses and risk assessment procedures discussed in section 7 of this report.

Within the framework of all of these considerations, highly successful crash-resistant fuel systems have been designed and utilized. This section of the report summarizes the current status of knowledge in CRFS technology and the level of implementation of CRFS in large transport aircraft.

6.3 GENERAL SYSTEM DESIGN CRITERIA.

Crashworthy fuel system design must fit within the framework of established fuel system design parameters. These overall criteria may be summarized in the following outline:

- Aircraft Performance
    - Operating Conditions
    - *Crash Conditions*
    - *Occupant Survivability Level Desired/Possible*
    - *Structural Reaction to Crash*

- Overall Fuel System Design
  - Performance
  - Simplicity
  - Reliability
  - Location

- Individual Component Design
  - Location
  - Performance (operational and *crash resistant)*
  - Materials
  - Reliability
  - Maintenance

- Design Aids
  - Standards
  - Checklists
  - Hazard Analyses
  - Handbooks and Guides

6.3.1 Aircraft Performance.

The primary factor to be considered in fuel system design is the performance required of the aircraft. The system must be designed to allow the aircraft to accomplish its design goals and to operate successfully during all required operational modes of the aircraft. This principle must be followed in successful CRFS design as well. However, the CRFS also must be designed to perform its intended function of preventing or minimizing dangerous spillage and resulting postcrash fire. *To that end, the criteria listed in italics in 6.3 pertain specifically to crash-resistant design and generally have not been included previously in standard fuel system design criteria.*

The common parameters of crash conditions for the type of aircraft in question must be defined and quantified in order to determine the level of performance expected for the CRFS. For example, large aircraft tend to crash with higher vertical and longitudinal velocities than do small aircraft. Expected crash velocities must be obtained from accident data gathered for the aircraft in question or extrapolated from crash data on similar specific aircraft models. The occupant survivability level in these crashes must be ascertained. The survivability criteria could be defined in terms of crash loads transmitted to properly restrained occupants and to the preservation of occupiable space around the occupant, irrespective of whether the occupants did or did not survive [85]. Whatever criteria are selected, they must be correlated with the level of occupant survivability desired.

Before the CRFS can be designed, the aircraft structural response to these anticipated crash conditions must be determined. Crash data can be helpful in determining structural response of similar designs. Design analyses and computer studies should also be utilized to determine anticipated failure modes and locations of structural deformation during crashes. This

information is essential in determining CRFS component locations and performance requirements.

6.3.2 Overall Fuel System Design.

The fuel system, as an integrated system, must be designed to function under all foreseeable environmental and operational conditions that might be encountered during the life cycle of the aircraft. The CRFS must perform its function within the desired survivable crash envelope as a whole system and not simply a collection of individual components. Whatever conditions are imposed upon a component and its reaction to those conditions could well compromise the integrity of an adjacent component (e.g., if a fuel line is trapped in a deforming and separating structure, the forces transmitted through the line might pull the hose out of the hose-end fitting, break the hose end fitting or break the component that is attached to the hose-end fitting, allowing fuel leakage even if the integrity of the hose itself is maintained).

The location of the fuel system and its components is constrained by the configuration and performance requirements of the aircraft. However, the CRFS location must be incorporated into the aircraft very early in the design process so that the fuel system and its components are protected from crash damage to the maximum extent possible.

Accurate crash data does not currently exist to either define the level of airframe structural damage or the level of occupant survivability as functions of impact velocities and resultant G forces. As a consequence, today's CRFS designer is unable to accurately determine the crash severity level in which the CRFS must safely contain fuel.

Two concurrent paths could be followed to eliminate the dilemma that the CRFS designer faces. First, the CRFS designer must be given access to crash severity data recorded by skilled crash investigators from detailed crash investigations that are conducted both in the field and through review and analysis of past accident investigation reports.

Second, pending the accumulation of accurate crash data, the CRFS designer should design the CRFS to withstand the structural loads and structural displacements that occur during typical takeoff and landing accidents. These accidents are the most likely to have survivors. Overall observations of the effects of crash loads and structural displacements in takeoff and landing accidents clearly indicate the following typical fire producing scenarios:

a. Engines are displaced.

b. Fuel tanks are ruptured.

c. Fuselages are crushed and often broken and/or separated into various segments.

d. Wing leading edges and wing root areas, especially those in and near the landing gears, are severely damaged.

e. Fuel and oil lines are cut, torn, pulled from their end fittings or otherwise broken in such a manner that dangerous spillage occurs, and are often made more hazardous because the fluids are heated and/or pressurized.

f. Fuel and oil system components are damaged causing dangerous spillage.

The fire threat associated with these readily foreseeable hazardous situations can be greatly reduced by using fuel system design aids such as the Fuel System Hazard Level Reduction process discussed in Section 7.2, the Fuel System Design Checklist in appendix C and by implementing the following basic CRFS design concepts:

a. Incorporate state-of-the-art crashworthy bladders in as many fuel tanks as is reasonably practical.

b. Avoid locating fuel and oil lines in areas of anticipated impact or extensive structural displacement.

c. If unable to safely locate fuel and oil lines, incorporate self-sealing breakaway valves in the lines where impact and extensive displacement is anticipated.

d. Incorporate methods to stop the pressurization of crashed aircraft fuel and oil lines.

e. Incorporate penetration-resistant structures in areas vulnerable to damage by blown tires, shattered wheels, landing gear struts and trunions, and by wing slats, flaps, gear doors and other structures that may be driven into areas of the aircraft where fuel is located, either in tanks or in the plumbing system.

The design philosophy for the CRFS must, by necessity, follow two paths. One defines the probable or anticipated fuel spillage methods that will occur at the crash severity level selected, while the other evaluates the relative crash-resistant features of the specific items making up the CRFS. As an example, if a fuel filter assembly does not incorporate a high level of crashworthiness in its design, it could still function safely in a crash if it were mounted in an area that was deemed to remain "safe" during the upper limit survivable accident. However, if the component must be located in an area where extensive crash damage is likely, the component must incorporate crash safety features inherent in its design.

Some crashworthy design features incorporated in current transport airplanes involve the use of fuel shut off valves that can be closed by the flight crew two completely separate ways, either electrically or by mechanical linkages. The concept being that if one method is rendered inoperative, the other can still be used.

Another crashworthy scheme employed in some current airplanes is to route the fuel lines in such a manner that as the engine or other components are separated from the airframe, the pulling force applied to the fuel line causes it to break, predictably, down stream of manually actuated shutoff valves, rather than remain intact, literally pulling the fuel lines out of the airframe – shutoff valves included.

The design of the fuel system should be kept as simple as possible commensurate with its design objectives. Simplicity generally leads to increased reliability and ease of maintenance. There is an added benefit for the CRFS—simplicity generally reduces the number of possible unsafe failure points during a crash.

6.3.3 Individual Component Design.

Fuel system components are routinely designed to be structurally sound during all normal flight and service loads. These components, with no modification, could be used to create a CRFS that would function as desired in the selected upper level survivable accident. To do so, however, could require that the airframe behave in a specific manner regardless of the crash environment. Further, it is probable that structural enhancement and reinforcement would be required in areas where the noncrashworthy components were located. While such a CRFS could be built, the weight and other design considerations, i.e., component location and fuel line routing, render the approach less than desirable.

A great deal of information has been written about the design of CRFS components. The Aircraft Crash Survival Design Guide is the most comprehensive and most current source of this material [86] and should be the designers' principal reference for design guidance. There are several key components of the CRFS, however, that are worthy of additional discussion. They are the fuel tanks and its fittings, the self-sealing breakaway valve, the fuel lines and their fittings, vent valves, drain valves, and spillage control valves. If the reader wishes to obtain more detailed information regarding these components, refer to the Aircraft Crash Survival Guide, which has been a helpful aid for the following discussion.

6.3.4 Tanks and Fittings.

Transport aircraft flying today carry their fuel in different types of tanks. Some, referred to as integral tanks, are merely open areas within the wings, sealed with a coating to prevent seepage. Others utilize bladders of varying degrees of crashworthiness. Still others use tanks made of metal or various composite materials.

The ideal fuel system is one that completely contains its contents both during and after an accident of such severity as to be at or slightly above the upper limit of human survivability. The fuel must be contained no matter how the basic structure fails and regardless of the magnitude of the displacements of the fuel system components relative to the aircraft structure. Similarly, all possible crushing loads, penetrative loads, and inertia loads must be carried without leakage. Integral tanks, in spite of the various efforts to improve their containment capabilities, are not presently able to safely contain their contents in most accidents where human life is threatened. The most reliable "fuel containment concept" today involves, as a prime element, the use of flexible, high strength, cut- and tear-resistant fuel bladders built with construction materials and fittings that improve the ability of a fuel system to contain fuel under survivable impact conditions. Although this ideal fuel system is, at times, difficult to achieve, the military helicopter accident history over the past 25 years clearly demonstrates that it can be done.

While the researchers and developers of the 1950s would undoubtedly embrace the definition of the ideal fuel system, and while they would applaud today's application of the fuel containment

concept, their own efforts were generally unsuccessful. Their early work [20 and 21] ultimately resulted in the issuance of MIL-T-27422 and MIL-T-27422A, but exhaustive testing of the requirements contained in those specifications was not undertaken until the AvSER research of the 1960s.

The testing of the crash-resistant fuel tanks developed in accordance with MIL-T-27422A revealed at least three major shortcomings. The first was the underestimation of the vertical, longitudinal, and lateral loads being applied to the fuel system in severe, but survivable accidents. Since many aircraft fuel tanks are located low in the structure, in the wings and/or very near the airframe outer surfaces, they are subject to severe loads. Additional loads can be added to the tanks by the close proximity of passengers, cargo, landing gear, and in some cases, the engine.

The second shortcoming was the failure to consider the fuel tank fitting pull-out problem and the puncture and tear-resistance properties of the fuel tank that are needed to prevent penetration by the jagged metal and broken spear-shaped components of the failing structure. When puncture coincides with the high-pressure loading of the tank during the crash sequence, the tearing of the fuel tank wall progresses rapidly away from the puncture wound. Although the early CAA work recognized the potential danger from puncture and tear, no attempt was made to establish a material requirement in MIL-T-27422A for this phenomenon, for the problem related to tank wall strength relative to the metal fitting sizes or shapes, or for the fitting locations in the fuel bladder.

The third shortcoming was the failure to recognize that fuel system components, including the tanks, are often subjected to, and impacted by, aircraft structure that is being torn apart and displaced a considerable distance. Requirements for tank design that would allow for safe separation from the displacing, and sometimes very sharp, structures were not even considered.

With the demonstration of improved materials in the crash testing conducted during the 1960s [87], and with the development of new tests for measuring fuel bladder crash-resistant properties, MIL-T-27422A was completely revised. In addition to the standard qualification tests of noncrashworthy fuel tanks, as specified in MIL-T-6396 (bladder tanks) and MIL-T-4478 (self-sealing tanks), a draft of MIL-T-27422B [88] was issued containing a battery of new requirements related to crash-resistant fuel bladder testing. These new requirements included a series of tear-resistance tests, followed by tank drop tests. Both test series are worthy of further discussion in this report.

6.3.4.1 Tear Tests.

During the extensive research test activities of the 1960s and 1970s, as well as during the concurrent detailed crashworthiness fuel system investigations of aircraft crashes, it became readily apparent that the level of bladder material tear resistance was a key factor in preventing dangerous fuel spillage. In many crashes, metal fittings integral to the bladders would remain attached to the displacing airframe structure, tearing out of the bladder walls and thereby releasing large quantities of fuel. In addition, bladder punctures that frequently occurred would continue to tear the bladder, especially during the fluid pressure buildup phase of the crash impact. These tears also allowed large quantities of fuel to escape. The need to safely retain the

metal fittings in the bladder and the need to find a satisfactory solution to the puncture-tear propagation problem were key concerns in establishing the tear-resistance requirement. After almost 10 years of testing, 400 ft-lbs of energy was determined by the authors of MIL-T-27422B to be the appropriate constant-rate tear requirement for small-to-medium-size aircraft* with fuel tank quantities of up to 1,000 gallons. The research team concluded that additional research in all aspects of fuel tank crash resistance should be conducted before tanks with capacities exceeding 1,000 gallons were used or before such tanks were installed in thicker-skinned, larger-size aircraft.

6.3.4.2 Fuel Tank Crash Impact Test.

A 65-foot free-fall drop test was established by the researchers and authors of MIL-T-27422B after almost 10 years of test activity, including hundreds of actual tests. The 65-foot height was identified as the minimum drop test height that would verify the load-carrying capability of an unsupported bladder with all of the bladder metal fittings installed, and that would verify bladder seam continuity and strength, particularly in the bladder sidewalls. Bladders must also possess a high degree of cut and tear resistance to safely survive the upper level survivable accident. These are key issues that are brought into play when bladders are required to bridge gaps appearing in the airframe due to structural displacement associated with an upper limit survivable accident and/or when bladders are also being compressed by strong, heavy, and often sharp structures. Bladders constructed of highly extendable materials, but low in cut and tear resistance, have been able to easily pass 65-foot drop tests; however, if the bladders contact a sharp edge or a penetrative object while being distended at impact, massive fuel spills will occur. The failure is analogous to sticking a pin in an inflated balloon.

Because the 65-foot drop test height was determined to be the minimum height required to verify necessary bladder strength, no margin of safety was built into the height of the drop test. Instead, a margin of safety was obtained by specifying that the tank be filled to 100% of capacity with water. Because the weight of water is approximately 20%-25% greater than the weight of aviation fuels, a margin of safety is achieved. In many applications, this margin of safety for a critical item might appear to be low, but given the track record that the CRFS has established during the last 25 years, the margin of safety appears to have been appropriate.

It is interesting to note that shortly after the 65-foot crash impact test height was established as a result of the extensive military research program, units of measurement defining a reasonable upper level survivable accident for the small-to- medium-size aircraft were emerging in the form of velocity changes occurring during the crash in three directions—vertical, longitudinal, and lateral. The resultant speed, the speed and direction actually traveled by the occupants when all three speeds were combined, often exceeded 75 ft/sec. However, further study of the data indicated that the frequency of occurrence of the higher velocity accidents was quite remote. Consequently, a resultant speed for the upper level survivable military accident has been focused in the 65 ft/sec range.

If the same exhaustive research that gave rise to the original 65-foot drop test height were undertaken today, the drop test height might be increased. Today's military helicopters

* An arbitrary selection defining airplanes that could seat up to 50 occupants.

incorporate many crashworthiness features, including full CRFSs, and are clearly safer than were their predecessors. Seat technology has been greatly improved, airbag programs are being implemented, in some cases survivable space is being enhanced, and other safety features are continually being added. As a result, occupants are surviving more severe crashes today than ever before. In fact, many helicopters crash onto soft ground containing rocks, stumps, and trees at higher longitudinal velocities than the 100 ft/sec (68 mph) speed referenced in MIL-STD-1290A and are still being considered survivable. An indication that the current fuel systems are not overdesigned is that postcrash fires are still occurring in crashes that are only slightly above the upper limit survivable accident.

6.3.5 Self-Sealing Breakaway Valves.

Fuel and oil is moved from one location to another within the aircraft airframe through flexible and/or rigid hoses or tubes. During accidents where structural displacement is great enough, these fluid-carrying lines are often pulled beyond their stretching capability, causing them to separate and spill readily ignitable fluid. Spillages due to this type of plumbing failure can be greatly reduced by the use of self-sealing breakaway valves (SSBV).

Self-sealing breakaway valves are valves designed to separate into two or more sections and seal the open ends of designated fluid-carrying passages. The openings may be in fuel/oil lines, tanks, pumps, fittings, etc. The valves fall into two general categories: the "frangible" type, which incorporates a portion that breaks apart, allowing valve closure and separation (figures 6-6 and 6-7), and the quick-disconnect type, which is installed so that it will be disconnected during the crash sequence (figure 6-8). Some valves in use today have both these features incorporated into their design. Each fuel system design will dictate which of the two types of valves can or should be used. In either case, the valves must be installed in a manner that precludes inadvertent operation.

Self-sealing breakaway valves have been successfully used in the DC-9 auxiliary fuel system since the early 1970s. While figure 6-7 provides a simple overview of the subject valve, the reader is referred to appendix A of this report for more detailed information.

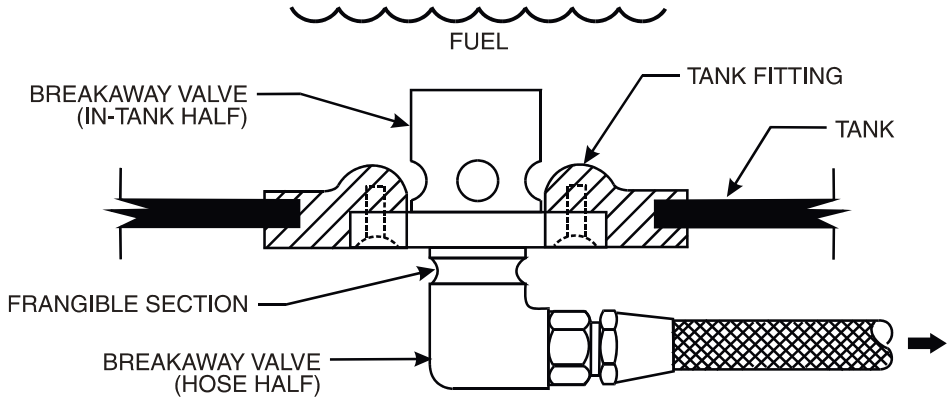

FIGURE 6-6. FRANGIBLE TYPE SELF-SEALING BREAKAWAY VALVE INSTALLED AS A TANK OUTLET (These type valves are closed and separated by displacement of one of the valve halves.)

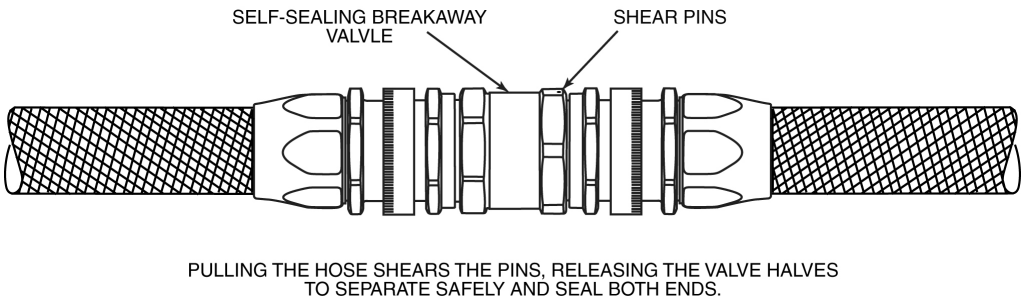

FIGURE 6-7. FRANGIBLE TYPE SELF-SEALING BREAKAWAY VALVE, AS USED IN THE FUEL LINE OF SOME CURRENT LARGE TRANSPORT AIRCRAFT AUXILIARY FUEL SYSTEMS

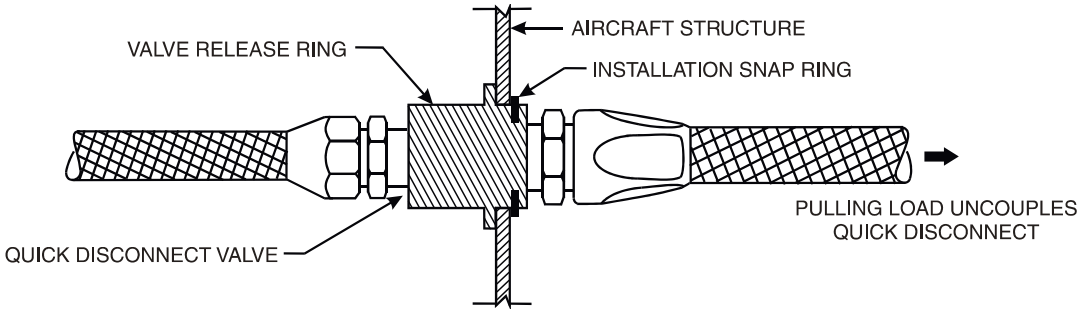

FIGURE 6-8. QUICK DISCONNECT VALVE INSTALLED TO OPERATE AS A SELF-SEALING BREAKAWAY VALVE

The forces that are usually applied to self-sealing breakaway valves to cause separation and closure are transmitted by a pulling movement of the flexible fluid-carrying hose. As the hose stretches, a force is transmitted to the valve. If the force is great enough, a component finally fails. Hopefully, it is the valve. Unfortunately however, sometimes it is the other end of the hose or a hose-end fitting. Guidelines to ensure that the weak link in each load-producing system is the frangible section of the self-sealing breakaway valve and not some other link in the "chain" are discussed later in this section.

There are design situations where, for one reason or another, a load path other than the hose must be used. Cable lanyards are an acceptable alternative load path technique, and they are used today in some aircraft installations (figure 6-9). If lanyards are used to transmit the force to cause a valve to fracture and separate, they should be capable of carrying at least twice the amount of load it takes to fracture the valve. If they are used to move a release ring, such as on a quick-disconnect valve (figure 6-10), they should be at least twice as strong as the force required to move the ring. As a general rule, the force required to move a quick-disconnect release ring is considerably less than the force required to fracture the frangible section of a self-sealing breakaway valve; consequently, a lighter-weight overall system can result.

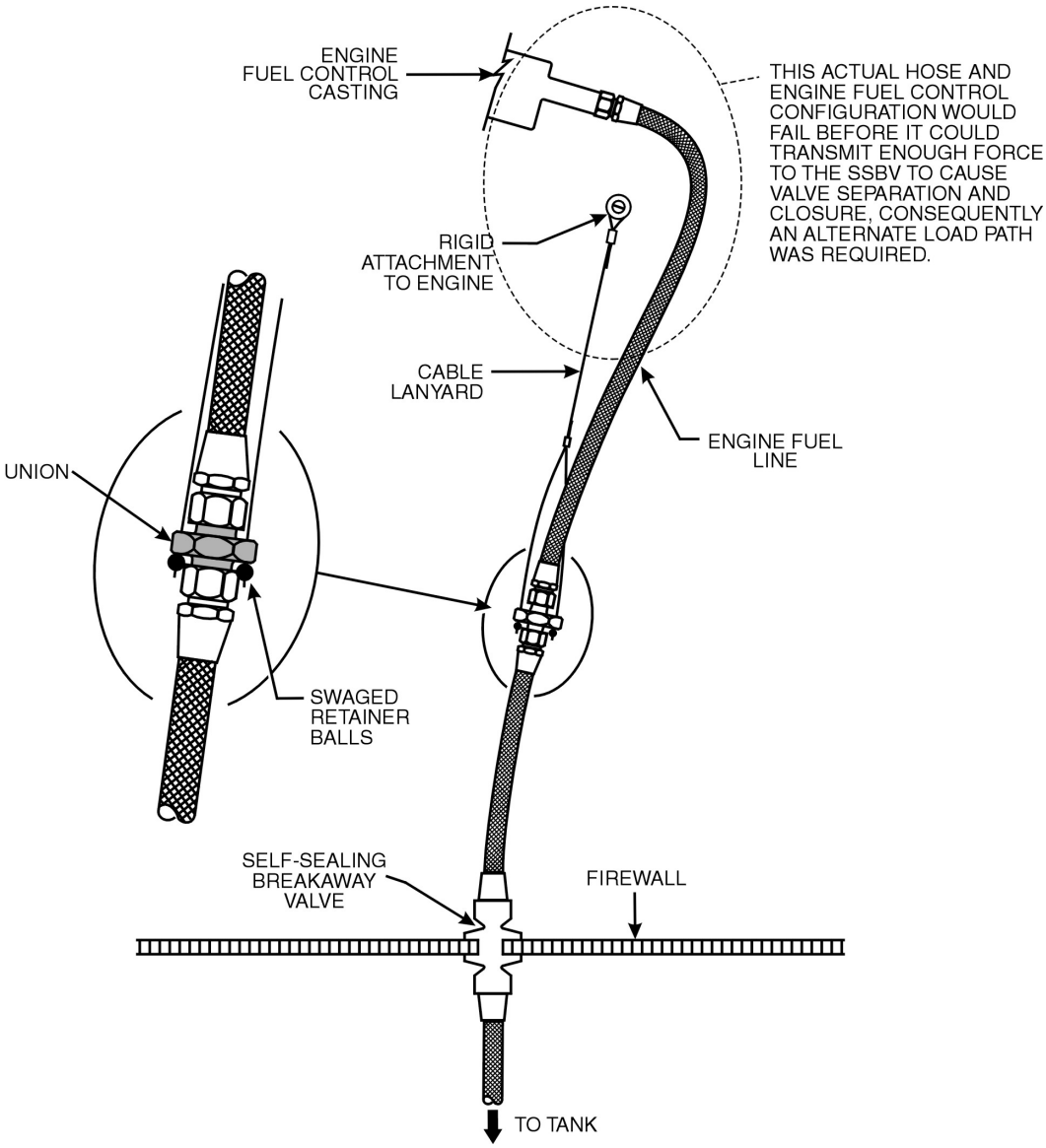

FIGURE 6-9. CABLE LANYARD USED TO TRANSMIT THE LOAD REQUIRED TO CAUSE SEPARATION AND CLOSURE OF A TYPICAL SELF-SEALING BREAKAWAY VALVE

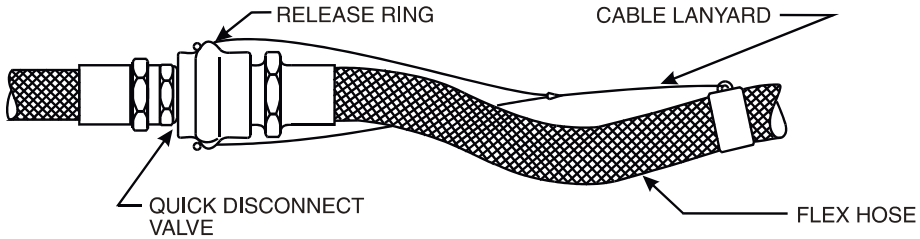

FIGURE 6-10. CABLE LANYARD USED TO TRANSMIT LOAD TO PULL RELEASE RING THAT UNCOUPLES QUICK-DISCONNECT VALVE

Self-sealing breakaway valves should be located at each fuel-carrying tank outlet and at locations within the fuel line network where extensive displacement is foreseeable, such as tanks mounted external to the fuselage or in engine compartments. The purpose of these valves is to prevent rupture of the tank, hoses, or fitting components by placing a "safety fuse" in the load path.

A self-sealing breakaway valve (figure 6-11) should be used to connect two fuel tanks in a direct side-by-side arrangement if there is a reasonable probability that structure failure or displacement will occur in the immediate area of the tanks.

Tank-to-line interconnect valves should be recessed sufficiently into the tank so that the tank half is flush with the tank wall or protrudes only a minimal distance beyond the tank wall after separation. This feature reduces the tendency of the valve to snag on adjacent structures during the crash sequence.

The frangible interconnecting member of each of these valves should be sufficiently strong to meet all operational and service loads of the aircraft within a reasonable margin but should separate at 25 to 50 percent of the minimum failure load for the weakest component in the fluid-carrying line. Subsection 29.952(c)(1) of AC 29-2C explains in detail how these loads are derived and calculated.

Each valve application should be analyzed to assure that the probable separation load will be exerted in a direction and manner to which the valve is best suited. These loads, whether tension, shear, compression, or combinations thereof, are obtained by analyzing the aircraft for probable impact force and direction and by determining the consequent structural deformation around the valve. Self-sealing breakaway valve designs should not allow dangerous spillage during or after valve separation. The valve should permit no external leakage when partially separated.

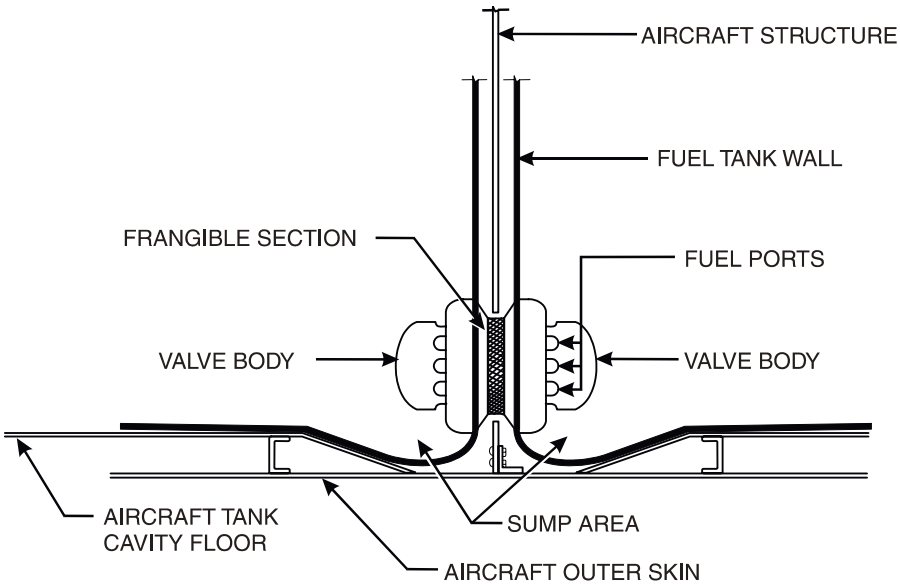

FIGURE 6-11. SELF-SEALING BREAKAWAY VALVE USED AS A TANK-TO-TANK INTERCONNECT

For this reason, valves with a very short triggering stroke are superior to those with a long stroke.

Operational pressures are dependent on specific applications, but the valve designs can take advantage of the available line pressure to assist in keeping the self-sealing mechanism closed. As in all valve designs, light weight and minimal pressure drop are major design objectives, but the resistance of the valve to direct impact or to high compressive loads should not be sacrificed for the sake of weight reduction.

6.3.6 Fuel Lines.

Damaged fuel lines frequently cause spillage in aircraft accidents. Lines often are cut by surrounding structure or worn through by chafing rough surfaces. The use of flexible rubber hose armored with a steel-braided harness is strongly suggested in areas of anticipated dragging or structural impingement. In systems where breakaway valves are not provided, these stretchable hoses should be 20 to 30 percent longer, before stretching, than the minimum required hose lengths. This will allow the hose to shift and displace with collapsing structure rather than be forced to carry high tensile loads. The practice of routing fuel lines through holes in floor beams rather than attaching the lines to the outside of the beams should be avoided because it greatly restricts the ability of the lines to shift with displacing structure.

For this reason, it is equally important that couplings and fittings be used sparingly because of their propensity to snag and restrict the natural ability of the hose to shift.

All fuel lines should be secured with breakaway (frangible) attachment clips in areas where structural deformation is anticipated. When fuel lines pass through areas where extensive displacement or complete separation is anticipated, self-sealing breakaway valves should be used.

All fittings used in the fuel system should meet specific strength requirements when tested in the designated modes. The loads are always applied through the hose with freedom allowed for the hose to form the bend radius. Thus, the effective moment arm for the bending tests changes primarily with the line size and secondarily as the applied load produces changes in the bend radius. This test procedure is much easier to mechanize than one requiring a constant moment arm and is typical of what happens in an actual accident.

In designing a system using line-to-line breakaway valves, one should consider potential hazards of cross-axis shear loading on the valve halves. While omnidirectional separation is not an absolute requisite for most line-to-line valves, it is highly desirable, and every attempt should be made to procure omnidirectional valves if there is any possibility of cross-axis shear loading.

Fuel lines are often used as the means of applying the loads necessary to cause self-sealing breakaway valves to close and separate. While hose and end fitting strengths are discussed in this report and in AC 29-2C, it must be remembered that, in order for a valve to be pulled apart at a predetermined load value, the structure supporting the opposite end of the hose-to-valve connection also must be capable of carrying the load. This includes bulkhead fittings and fittings terminating in components such as engine fuel controls, filters, and pumps. Failure to recognize

and design around these often overlooked weak links in the fuel plumbing system can negate the overall crash-resistant design effort.

Fuel line routing should be carefully considered during the design stage. Fuel lines should be routed along the heavier structural members, since those members are less likely to deform or separate in an accident. Avoid placing fuel lines that will normally be carrying fuel, if a crash should occur, in areas of anticipated impact damage, such as wing leading edges, the lower external skin, and near the landing gear. Evacuated fuel lines can be considered as possible exceptions to this rule. Also, it is important that hoses have a space into which they can deform when necessary. For example, when hoses pass through large flat-plate areas, such as bulkheads or firewalls, the hole allowing line passage should be considerably larger than the outside diameter of the line. Hose stabilization as well as liquid-tight, fire-tight seals still can be maintained if frangible paneling or baffles are used.

If design requirements limit the use of the protective measures discussed above, full use should be made of self-sealing breakaway couplings located in areas of anticipated failures and structural displacements. Crossover connections, drains, and outlet lines present a special problem since they are usually located in the lower regions of the tank, where they are vulnerable to impact damage. Space and flexibility should be provided at the connections to allow room for the lines to shift with collapsing structure. Utmost consideration should be given to using self-sealing breakaway fittings at each line-to-tank attachment point.

6.3.7 Vent Valves.

Aircraft vent systems can become a source of hazardous fuel spillage when the aircraft remains upright and the fuel tank is compressed, the aircraft rolls far enough to one side to allow fuel to drain out of the vent lines and/or when the vent lines fail.

Vent line failure often occurs at the point of exit from the tank. Failure at this point can be reduced by using short, high-strength fittings between the tank outlet and the vent line. The vent line should be designed to assure that it will discharge fuel passing through it away from the aircraft. Consideration should be given to utilizing wire-covered flexible hose routed in such a manner that it will not obviously become snagged in a displacing structure and torn from the tank. Self-sealing breakaway valves also can be placed at the tank-to-line attachment area. This approach becomes mandatory if there is danger of the tank being torn free of the supporting structure.

Vent lines can be routed inside the fuel tank in such a manner that, if rollover occurs, spillage cannot continue. This can be accomplished with siphon breaks and U-shaped routing and/or traps in the line.

Many military aircraft, both large and small, incorporate fuel system rollover float/vent valves inside the fuel tank. These valves are designed to operate in any attitude and to allow a free flow of air while prohibiting the flow of fuel. They are particularly advantageous during rollover accidents, and can be used in lieu of flexible lines, breakaway valves, and all other alternate considerations. An example of one type of vent valve currently being used in both military and civilian helicopters, is illustrated in figure 6-12.

If the fuel system is to be pressure refueled, it should be noted that a large bypass system for tank overpressurization should be considered. This capability can be built into the vent valve or can be incorporated in a separate unit. Large spring-loaded pressure relief valves are in current use today. Rollover protection is provided by the spring valve, but tank overpressurization due to tank compression causes fuel to be expelled at the vent outlet. In either case, however, care must be taken to ensure that spillage resulting from overpressurization due to tank compression during a crash is released away from aircraft occupants and the typical ignition sources.

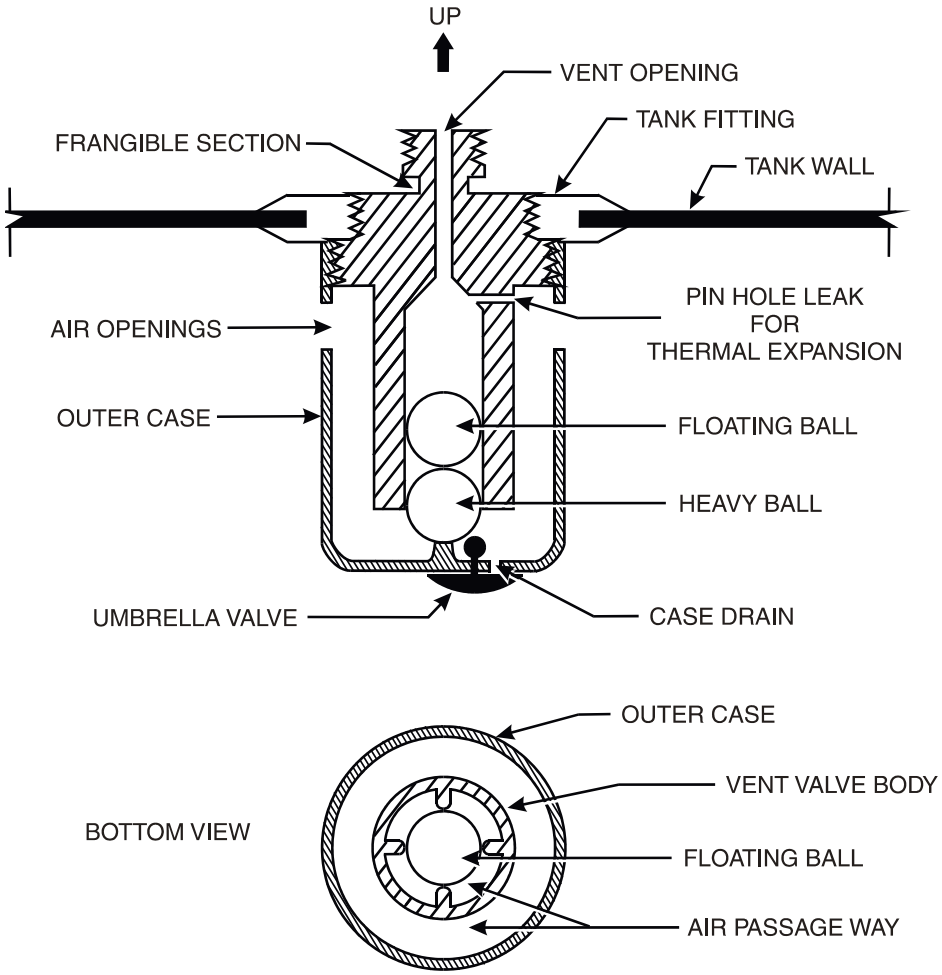

FIGURE 6-12. ROLLOVER VENT VALVE PASSES AIR BUT CLOSES IN ANY ATTITUDE WHEN FUEL TRIES TO ESCAPE

6.3.8 Drain Valves.

Sump drains are a frequent source of fuel spillage because their design dictates that they be located at the lowest point in the tank, in close proximity to the most probable impact area. Figure 6-13 illustrates one current installation that permits sump drainage without the sump drain valve poppet protruding beyond the face of the tank.

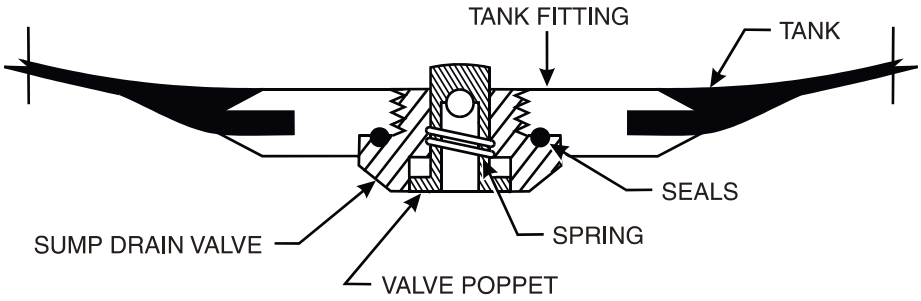

FIGURE 6-13. SUMP DRAIN VALVE DESIGNED TO RESIST OPENING OR DAMAGE DURING CRASH IMPACT

6.3.9 Spillage Control Valve.

During the 1980s two different valves were designed, developed, tested, and FAA certified for use on light aircraft [89]. These valves, installed in the main engine fuel line before it enters the engine compartment, were designed to stop the flow of fuel to the engine area when the engine is not running, as in a crash. Normally, when a fuel or oil line is broken, fluid will drain out. If this drainage is in the engine area, ignition by the hot surfaces or other sources is likely. The use of breakaway self-sealing valves of either the frangible or quick-disconnect type can stop the spillage flow, but they require displacement and resistive forces to be triggered or operated. In many small aircraft the structure is simply not strong enough to allow the creation of forces great enough to operate breakaway valves. The structure can be locally reinforced, cable lanyards can be used, or both can be used if necessary; however, the approach depicted in figure 6-14 uses neither.

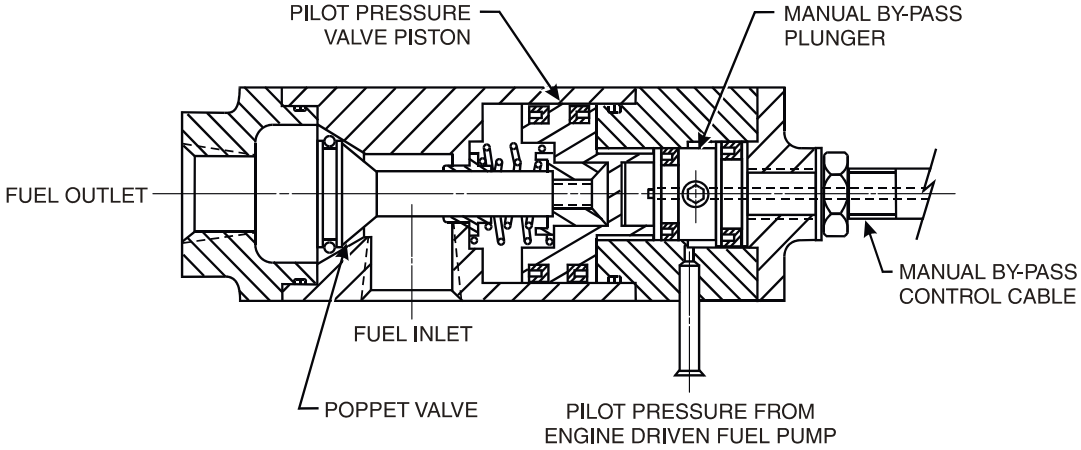

FIGURE 6-14. SPILLAGE CONTROL VALVE DESIGNED TO STOP FUEL FLOW IF ENGINE QUITS OR IF DOWNSTREAM FUEL LINES SEPARATE

The spillage control valve assembly shown in figure 6-14 consists of a valve body assembly, pilot-pressure-operated check valve components, a manual by-pass plunger, a manual by-pass control cable assembly, and associated seals and O-rings. When the aircraft engine is operating under normal conditions, fuel is drawn from the fuel tanks through fuel lines to the spillage control valve. Fuel enters the spillage control valve assembly, passes through the internal valve

components and exits, passing on to the airframe-mounted fuel filter and on to the engine-driven fuel pump.

When the aircraft engine is operating under normal conditions, pilot pressure holds the valve open. Statically, when the aircraft is not operating and the engine start fuel boost pump is off, fuel is prevented from flowing past the engine firewall by the spillage control valve assembly. In the static condition, no fuel pressure (pilot pressure) is available to the spillage control valve assembly so the valve remains closed.

The FAA-certified spillage control valves require more than twice the head pressure produced by full fuel tanks, located as high above the valve as is probable in an accident, to open the poppet.

Under conditions in which sudden engine stoppage is encountered, i.e., blade strike, fuel system line failure, or foreign object ingestion, the spillage control valve assembly reacts to the loss of pilot pressure and stops fuel flow. The condition of sudden engine stoppage is identical to the static condition of the system.

Normal starting and engine operation on aircraft equipped with the spillage control valve is in accordance with the normal aircraft procedure, with the exception that the manual by-pass lever of the spillage control valve must be actuated prior to turning on the start fuel boost pump. After engine start-up, the manual by-pass lever is returned to the "Normal" position.

In-flight restart of the engine is also in accordance with the recommended normal aircraft procedure, except that the manual by-pass lever must be activated prior to turning on the start fuel boost pump. Subsequent to a successful engine restart, the manual by-pass lever is returned to the "Normal" position.

The valve is designed so that failure of pilot fuel pressure to reach the valve, i.e., pilot pressure line breakage, will not cause engine stoppage. The valve is sized so that the engine-driven fuel pump can pull enough fuel through the spillage control valve to obtain the maximum, as well as idle, engine power. Operating with the valve in this mode is similar to operating in the by-pass mode of a filter or similar type component. Should the pilot pressure fuel line break (rupture), the resulting spillage can be prevented or held to a minimum by incorporating a self-sealing breakaway valve, a flow-restricting orifice, or both.

6.3.10 Nitrogen.

Diluting the oxygen laden air in the ullage space of a fuel system to the point that it will no longer support combustion has been in use for over 60 years. Methods have included the use of CO_2, cleaned aircraft engine exhaust, and nitrogen.

The catastrophic in-flight explosion of TWA flight 800, a B-747 aircraft, has caused nitrogen inerting to once again be seriously considered as a reasonably practical way to reduce the likelihood of a fire inside a fuel tank and/or vent system. Pioneered by the military as a means to prevent fuel tank explosions following ballistic impacts, it quickly found its way into the military's supersonic SR-71, YF-12, B-70 bomber, and NASA's X-15 fuel systems as a means of controlling ullage fires during heating of the aircraft caused by its various flight profiles.

Studies of its behavior indicate that it served that purpose quite well. How it serves to lessen the crash fire threat is unknown; however, when a midair collision between the B-70 and an F-104 caused both aircraft to crash, an interesting crash observation was made. It appeared to the investigators on the scene that the postcrash fire damage, especially in the B-70 wing area, was much less than they had anticipated, based on their observations of many other military large aircraft crashes.

Discussions with the on-scene investigators indicated that they felt that the presence of abundant nitrogen in the area served to reduce, and in many areas prevent, the start and/or spread of postcrash fire. How successful it really was in the postcrash fire episode is unknown. Although several investigations have shown that fuel tank inerting offers little or no protection when the fuel tank itself is ruptured, this might be an area worthy of further research.

6.3.11 Electrical System.

A recent study of nearly all transport airplane fuel systems [90] disclosed many instances of electrical wiring inside fuel tanks which was chafed, worn, or frayed. Some of the wires were in metal tubes, while others were not even in protective sheathes. While the study focused on issues related to in-flight fires and explosions, many of the observations also apply to the crash scenario.

An energized electrical system being torn apart during an aircraft accident can easily ignite spilled combustible liquid. While the scope of this study deals primarily with controlling spillage, it is worthy of mention that selective routing of electrical wiring can reduce their likelihood of providing an ignition source for the spilled combustible.

6.4 ASSESSMENT OF CURRENT STATUS OF CRFS DESIGN.

The current status of CRFS design can be assessed from three different aspects: (1) the importance a particular item has in the overall system; (2) the technical knowledge available for the design of crash-resistant fuel systems and components; and (3) the level of implementation in current systems. The authors of this report have attempted to make this assessment, albeit arbitrarily, from their perspective of each having over 35 years of experience developing CRFS technology. Their assessments are contained in table 6-1, which addresses specific CRFS components for large transport aircraft, and in table 6-2, which addresses the correlative factors which are necessary for effective CRFS design.

Both tables list specific components and/or factors that must be considered in CRFS design. In table 6-1 (see columns A-D) each component is evaluated with respect to A—how critical this particular component is in CRFS design; B—how much knowledge relating to crash resistance is available for component design; C—how much crash-resistance knowledge has been implemented in actual CRFS designs; and D—how many of the CRFS components are actually being used in large transport aircraft. In table 6-2, each factor is evaluated with respect to A—how important the particular factor is in crash-resistant design; B—how much knowledge is known about the factor which relates to CRFS design; and C—the level of knowledge regarding that factor which is currently being used in CRFS design for large transport aircraft.

TABLE 6-1. LARGE TRANSPORT AIRCRAFT CRFS COMPONENTS

Component	A	B	C	D
1.1 Fuel Tanks	5			
Bladders		5	3	2
Integral		2	1	2
Other		2	1	2
1.2 Fuel Lines	5			
Flexible		4	4	3
Rigid		4	3	2
1.3 Valves	4			
Tank selector		4	2	2
ON/OFF		4	2	2
Single-point pressure refueling		4	2	2
Check		5	3	3
Drain		5	3	3
Vent		5	1	3
1.4 Couplings	5			
Self-sealing (quick disconnect)		5	2	1
Self-sealing, breakaway (quick disconnect)		4	1	1
Self-sealing, breakaway (frangible)		5	3	2
AN/MS Plumbing		4	3	3
Nipples		2	1	1
1.5 Miscellaneous Components	5			
Pumps		4	3	2
Filler openings		5	3	2
Filler caps		5	3	2
Filters		3	3	2
Frangible fasteners		5	3	1
Fuel Quantity sensor		5	3	2

A = Level of crash-resistance importance
B = Level of crash-resistance knowledge available for component design
C = Level of crash-resistance knowledge integrated into component design
D = Level of CRFS component use in large transport aircraft

5 = Best/highest
1 = Worst/lowest

TABLE 6-2. FACTORS AFFECTING LARGE TRANSPORT AIRCRAFT CRFS DESIGN

Factor	A	B	C
1.1 Level of Crash Severity Desired	5		
Human tolerance		5	4
1.2 Crash Environment at the Severity Level Selected	5		
Velocity changes at impact		2	2
Structural behavior at impact		2	2
Impact attitudes and angles		2	2
1.3 Fuel System Behavior	5		
Probable fuel spillages		3	2
Probable ignition sources		3	3
1.4 Fuel Characteristics	4		
Typical liquid fuels		5	4
Modified fuels		2	1
1.5 CRFS Standards	5		
FAR's		2	5
SAE/DOD		3	2
Design Guides		4	3
Advisory Circulars		4	4
1.6 Quality and Quantity of Accident Data	5		
Investigator competence		2	2
Investigator training		2	2
Data storage		2	3
Data retrieval		2	3
Feedback		2	2

A = Level of crash-resistance importance
B = Level of knowledge related to crash-resistance issues
C = Level of knowledge being applied

5 = Best/highest
1 = Worst/lowest

Each component or factor is rated in all areas on a scale from 1 to 5, with 1 being the worst or lowest level and 5 being the best or most important. For instance, a 5 in column A of both tables signifies that this component or factor is of primary importance in CRFS design while a 1 means that the component or factor should be considered but does not take precedence over other considerations in CRFS design. A 5 in column B of table 6-1 means that the knowledge to design a particular crash-resistant component is extensive and complete, in column C that the

component is very well designed for crash resistance, or, in column D, that this particular component, in a highly crash-resistant configuration, is being extensively used in current large transport aircraft. Likewise, a rating of 1 in column B of table 6-2 means that very little is known about the factor or that the knowledge is unsatisfactory for CRFS design. A 1 in column C of table 6-2 indicates that this factor is not being used effectively to any extent in CRFS design.

Tables 6-1 and 6-2 provide a general idea of areas where future research is most necessary and where the implementation of crash-resistant hardware and/or airframe design is most lacking. To use the tables for prioritizing or selecting research and/or design projects, the level of importance should be of the highest order (e.g., a rating of 5 in column A). Then, for whichever major component or factor is selected, the lowest number under column B indicates where more research is needed. The lowest number in column C signifies the lowest implementation or application of the factor. A low number here indicates a need for design and/or implementation of a CRFS component (table 6-1) or better utilization of available knowledge in CRFS design (table 6-2).

In examining table 6-1, several general trends are apparent. Perhaps the most noticeable is that all but one of the general component areas have the highest level of importance (5 in column A). This reflects the fact that a CRFS must work as a complete system. It is only as effective as its weakest link. Also apparent, with only a few exceptions, is that the basic knowledge for CRFS component design and implementation is well advanced. One notable exception is the lack of CRFS knowledge and technology to incorporate crash resistance into current integral fuel tanks.

The lower ratings in column C of table 6-1 indicate components incorporating little, if any, special crash-resistant features in their design. Some components can be made more crash resistant by making them sturdier or redesigning them to reduce their overall vulnerability. The latter is usually better, especially if weight is a concern. In the case of fuel tanks, bladders have shown to be more crash resistant than other fuel containment concepts thus far developed.

In table 6-2 the level of knowledge (column B), as well as utilization of that knowledge (column C) is shown. Much of the discrepancy between column A and B is due to the lack of adequate crashworthiness accident investigations, investigative procedures and accident data storage and retrieval. This issue is discussed at length in section 4 of this report.

The predominant criterion for manufacturers and designers is the level of crash severity that must be accommodated by the CRFS. Since the principal objective of the CRFS is to protect the aircraft occupants from fire in accidents that approach the limits of survivability due to impact forces, the crash environment must be well understood in order to establish the severity level for CRFS design.

7. FUEL SYSTEM CRASH SURVIVABILITY EVALUATION.

7.1 POSTCRASH FIRE POTENTIAL RATING SYSTEM.

The Aircraft Crash Survivability Evaluation process that is part of Aeronautical Design Standard (ADS)-11B [91] is designed to numerically relate the crash survival potential of a particular aircraft design to what is considered optimum for each specific issue to be rated, e.g., the fuel system. Throughout the past 30 years, the rating system has been highly reliable in pinpointing potential crash survivability problem areas. This section paraphrases in substantial part, the contents of ADS-11B.

Although ADS-11B is part of the U.S. Army's Survivability Program for Rotary Wing Aircraft, the Crash Survivability Evaluation *process* is applicable to all aircraft, fixed wing as well as rotary wing. The numerical ratings, derived primarily from accident data, are valid for both helicopter and small fixed-wing aircraft, but would probably be different for large transport category aircraft. The *process*, however, is a valuable tool for fuel system designers and, as such, is included in this report. When the quality of accident data for transport aircraft is improved, the evaluation items and the point system can be adjusted accordingly.

The primary objective of the evaluation *process* is to provide a tool for use during the preliminary design phase of new aircraft or for modification to existing aircraft. These early evaluations identify problem areas in sufficient time to accomplish design changes with a minimum cost in time and dollars.

The Aircraft Crash Survivability Evaluation is based on the probable performance of an aircraft in an upper limit survivable crash, since it is assumed that protection of the occupants to their upper limits of human survivability is the major goal in aircraft crashworthiness design.

When evaluating any aircraft from a crash survival point of view there are six basic factors that must be considered. They are:

1. Crew Retention System,
2. Passenger Retention System,
3. Postcrash Fire Potential,
4. Basic Airframe Crashworthiness,
5. Evacuation, and
6. Injurious Environment.

In order to develop a reasonable Crash Survivability Rating, weighted values have been assigned to the various factors. The percent of weight assigned to each is based on their relative hazard potential. The six factors with their hazard potential for small aircraft are shown in table 7-1. Although the relative crew/passenger retention system ratings are probably inaccurate for transport airplanes, accident data to date seem to show that the postcrash fire hazard does account for about one-third of the total crash hazard. It is not unrealistic to think that the overall retention system (crew plus passenger) could also account for approximately one-third of the total.

When performing the rating for small aircraft, the hazard potential percentage has been converted to an optimum point value where a perfect score on all six factors would equal 720. For existing aircraft not incorporating a crashworthy fuel system, inadequate restraint systems and postcrash fire have been equally responsible for injuries and fatalities in accidents so they were weighted at approximately 35% each. A poor score on either of these important items indicates a critical situation from a crash survival point of view – depending on such variables as number of occupants carried, operating terrain, and rescue facilities.

TABLE 7-1. AIRCRAFT SURVIVABILITY HAZARD RATING FOR HELICOPTERS AND SMALL AIRPLANES

	Hazard Potential	Optimum Points
1. Crew Retention System	17.9%	125
2. Passenger Retention System	17.2%	125
3. Postcrash Fire Potential	35.2%	255
4. Basic Airframe Crashworthiness	17.2%	125
5. Evacuation	8.3%	60
6. Injurious Environment	4.2%	30
Totals	100%	720

Each of the six factors is in turn broken down into subfactors against which a hazard potential percentage has been assigned and converted to an optimum point value. The evaluator selects that portion of the optimum point value that each subfactor is worth and lists it accordingly. The criteria for the Postcrash Fire Potential Rating subfactors are listed in table 7-2 and discussed briefly on the following pages. When rating an aircraft, the subfactors are given a point value proportional to the desirable qualities outlined in this discussion.

7.1.1 Spillage Control.

7.1.1.1 Fuel Containment (Optimum = 60 points).

a. Location (20% of total value) – 12 points

The location of the fuel tank should be evaluated with respect to the anticipated impact area, occupiable area, large weight masses, and primary ignition sources.

b. Vulnerability (20% of total value) – 12 points

The vulnerability of a fuel tank should be evaluated with respect to possible tank ruptures caused by various aircraft structural failures, such as landing gear failure and vertical column deflection. Tank failures associated with structural displacement, such as ruptures around the filler neck, the fuel line entry and exit area, the quantity indicators, and the tiedown devices should also be considered.

TABLE 7-2. POSTCRASH FIRE POTENTIAL RATING FOR HELICOPTERS AND LIGHT AIRPLANES

	Optimum Points	Actual Points
Spillage Control		
Fuel containment	60*	
Oil containment	20	
Flammable fluid lines	30	
Firewall	9	
Fuel flow interrupters	9	
Ignition Control		
Induction and exhaust flame location	30	
Location of hot metals and shielding	30	
Engine location and tiedown strength	15	
Battery location and tiedown strength	12	
Electrical wire routing	12	
Boost pump location and tiedown strength	7	
Inverter location and tiedown strength	6	
Generator location and tiedown strength	6	
Lights location and tiedown strength	5	
Antenna location and tiedown strength	4	
Total Points	255	

* If a range extension system is included in the evaluation, allow 40 points for primary fuel system and 20 points for the range extension system.

c. Construction Technique (50% of total value) – 30 points

The construction technique is evaluated for two primary considerations. One is tank geometry and the other is tank construction materials.

- Tank Geometry

  Smooth contoured shapes are given the highest number of points, whereas irregular shapes and interconnected multicell tanks are given the lowest number of points.

- Cell Material

  The tank is given a certain number of points, depending on its construction.

  Crash Resistant per MIL-T-27422B 30 points

Crash Resistant per MIL-T-5578C dated 26 July 1983*	12 points
Metal Canister	6 points
Integral	3 points

d. Fuel Boost System (10% of total value) – 6 points

The fuel boost pump should be evaluated according to its potential for causing fuel spillage due to fuel cell rupture or line failure. This includes location and method of fuel cell attachment.

7.1.1.2 Oil and Hydraulic Fluid Containment (Optimum = 20 points).

a. Location (34% of total value) – 7 points

The location of the oil tank should be evaluated from the standpoint of its proximity to the anticipated impact area, occupiable area, large weight masses, and primary ignition sources.

b. Vulnerability (34% of total value) – 7 points

Evaluate from the standpoint of rupture resistance from other aircraft structure; e.g., control linkage failures causing puncture to the tank.

c. Construction and Tiedown Adequacy (32% of total value) – 6 points

- Construction Methods

  Construction methods are evaluated in descending order of oil-containing ability.

Cellular	6 points
Bladder	4 points
Sheet Metal	2 points

- Tiedown Adequacy

  Tiedown should be evaluated primarily on the adequacy of the system to safely support the tank during typical crash accelerations.

* MIL-T-5578 deals with self-sealing characteristics of fuel tanks when subjected to various caliber projectiles, and does NOT address crash resistance directly.

7.1.1.3 Flammable Fluid Lines (Optimum = 30 points).

a. Construction (33% of total value) – 10 points

The construction of fuel lines should be judged in accordance with the hose material and couplings. Experience has shown that rigid lines fail before the flexible type; thus, flexible lines with a steel-braided outer sheath are given the most points. Also included in this phase of the evaluation are the couplings. The fewer the couplings the better. Ninety-degree couplings are less desirable than the straight type. Any coupling is less desirable than an uncut hose. Aluminum fittings usually fail before steel ones.

b. Routing (33% of total value) – 10 points

The routing of the fuel lines is an important consideration. The lines must not pass through areas where they can get trapped, cut, or pulled. Extra hose length (20%-30% in areas of anticipated structural deformation) should be provided. Holes through which the fuel lines pass should be considerably larger than the outer diameter of the hose.

c. Breakaway Fittings (33% of total value) – 10 points

Breakaway fittings or self-sealing breakaway valves should be installed on each fuel line that enters and exits the fuel tank. It is also advisable to have them installed at strategic locations throughout the system.

7.1.1.4 Firewall (Optimum = 9 points).

Evaluate the firewall from the standpoint of how well it will function as a shield between crash-induced fluid spillage and the various engine ignition sources.

7.1.1.5 Fuel Flow Interrupters (Optimum = 9 points).

Fuel flow interrupters are devices that block or divert the flow of spilled flammable fluids. There are many different methods to perform this function, including baffles, drain holes, drip fences, and curtains.

7.1.2 Ignition Control.

7.1.2.1 Induction and Exhaust Flame Location (Optimum = 30 points).

Evaluate from the standpoint of:

a. Location of expelled flames in relation to location of spilled flammable liquids.
b. Fuel ingestion.

7.1.2.2 Location of Hot Metals and Shielding (Optimum = 30 points).

Evaluate from the standpoint of how well the hot items (temperatures above 400ºF) are shielded or protected from fuel spillage. Components included are:

a. Engine (external and internal)
b. Exhaust system
c. Heater
d. APU

7.1.2.3 Engine Location and Tiedown Strength (Optimum = 15 points).

Consider sequences of engine separation. Where will the engine go and how will it affect the fuel cell, exhaust system, electrical wiring, and fuel and oil lines? Will the engine come into contact with spilled flammable fluids?

Retention strength is more important for aircraft in which the engine may be located above or just behind the fuel cell; it is of less consequence for pod-mounted engines.

7.1.2.4 Battery Location and Tiedown Strength (Optimum = 12 points).

Evaluate from the standpoint of tiedown strength and of vulnerability of the battery and attached wiring to damage during a crash. Location should also be as far as possible from fuel and oil tanks and anticipated areas of flammable fluid spillage.

7.1.2.5 Electrical Wire Routing (Optimum = 12 points).

Evaluate from the standpoint of crashworthiness of routing and vulnerability to damage during crash. Some excess length (20%-30%) should be provided to allow for airframe deformation during a crash.

7.1.2.6 Fuel Boost System (Optimum = 7 points).

The fuel boost system should be evaluated with respect to its function as an ignition source. The following items should be considered:

a. Power Supply. (An air-driven pump is best, a hydraulic-driven pump is next best, and an electrically driven pump is least desirable.)

b. Pump Location. (A suction system with the pump located on the engine is best. A pump located outside the tank is next best and an internal tank-mounted pump is least desirable.)

7.1.2.7 Inverter Location and Tiedown Strength (Optimum = 6 points).

Evaluate from the standpoint of tiedown strength and of vulnerability of the inverter and attached wiring to damage during crash. Location should be as far as possible from fuel and oil tanks and anticipated areas of flammable fluid spillage.

7.1.2.8 Generator Location and Tiedown Strength (Optimum = 6 points).

Evaluate from the standpoint of tiedown strength and of vulnerability of the generator and attached wiring to damage during a crash. Location should be as far as possible from fuel and oil tanks and anticipated areas of flammable fluid spillage.

7.1.2.9 Lights (Beacons, Search, and Navigation) (Optimum = 5 points).

Are the light filament and/or wires immediately surrounding the light attachments in the area of possible flammable fluid spillage?

7.1.2.10 Antenna Location (Optimum = 4 points).

Evaluate the antenna systems and their respective wiring from the standpoint of vulnerability to damage and location in the areas of possible flammable fluid spillage.

7.2 FUEL SYSTEM FIRE HAZARD LEVEL REDUCTION.

The previous section discussed the postcrash fire survivability factors and ratings criteria for aircraft fuel and electrical systems. This section presents a more detailed postcrash fire evaluation based on a rating system that has been used to determine the percent of the total fire hazard attributable to selected fuel system components overall and/or for a specific damage-prone area containing potentially hazardous fuel system components [92]. An example of an overall components evaluation in a hypothetical transport airplane fuel system is included to illustrate how the evaluation *process* is used to reduce the fire hazard level of the fuel system.

7.2.1 Evaluation Criteria and Process.

7.2.1.1 General.

Now that truly crash-resistant fuel system knowledge exists and, in fact, is installed in most U.S. military helicopters, and crashworthy hardware is available from many aerospace manufacturers, the fuel system designer is confronted with the problem of trying to determine how much fire safety can (or should) be included in any given aircraft type, size, or fuel system design. An evaluation technique has been developed which allows a fuel system design to be evaluated to determine the relative fire hazard level for each component and/or hazardous area. Proposed crashworthy design changes can then be integrated into the original design and the system re-evaluated to determine the fire hazard level reduction. This process allows the designer to make intelligent trade-offs, when necessary, in the fuel system design to achieve the desired reduction in the postcrash fire hazard.

For the evaluation to be performed, several assumptions must be made to establish a baseline or starting point. They are

a. The only fire threat being evaluated is the one from the fuel system. (The cargo, oils, etc., are not included in this evaluation, although they, too, could be evaluated if they were included in the evaluation process.)

b. The fire threat associated with the original fuel system is the basis from which the fuel system improvements are to be measured. As an example, the overall fire threat associated with the original fuel system is assumed to be 100%. Improvements in fuel system design are measured in percentage of reduction from the original 100% fire hazard level.

c. In order to evaluate the behavior of various fuel system designs, a crash environment that is typical of the serious, marginally survivable accident should be used as the basic reference point.

d. The evaluator must be skilled in accident investigation and reconstruction, fuel system design, aircraft and aircraft systems behavior during crash situations, and crash-resistant design.

The evaluation process is performed in the following manner:

a. The original fuel system is defined, and the various component and/or hazardous areas are noted, as shown in figure 7-1 and in table 7-3.

b. Each identified component or hazardous area in the original fuel system is evaluated in accordance with the rating system (defined below) to determine its relative fire hazard level.

c. The original fuel system design is modified to incorporate various crashworthy hardware and/or design changes, and then re-evaluated in accordance with the rating system to determine the fire hazard level reductions attributable to the improved design.

Note: The original fuel system may be upgraded by the addition of only one crashworthy improvement or by the addition of many crashworthy improvements. Each upgraded system must be evaluated as a complete system to determine the fire hazard level reduction attributable to separate design changes. The reason for the complete re-evaluation of each upgraded system is that the changing of one or more components and/or hazardous areas can, and usually does, influence the behavior of the remaining components and/or hazardous areas.

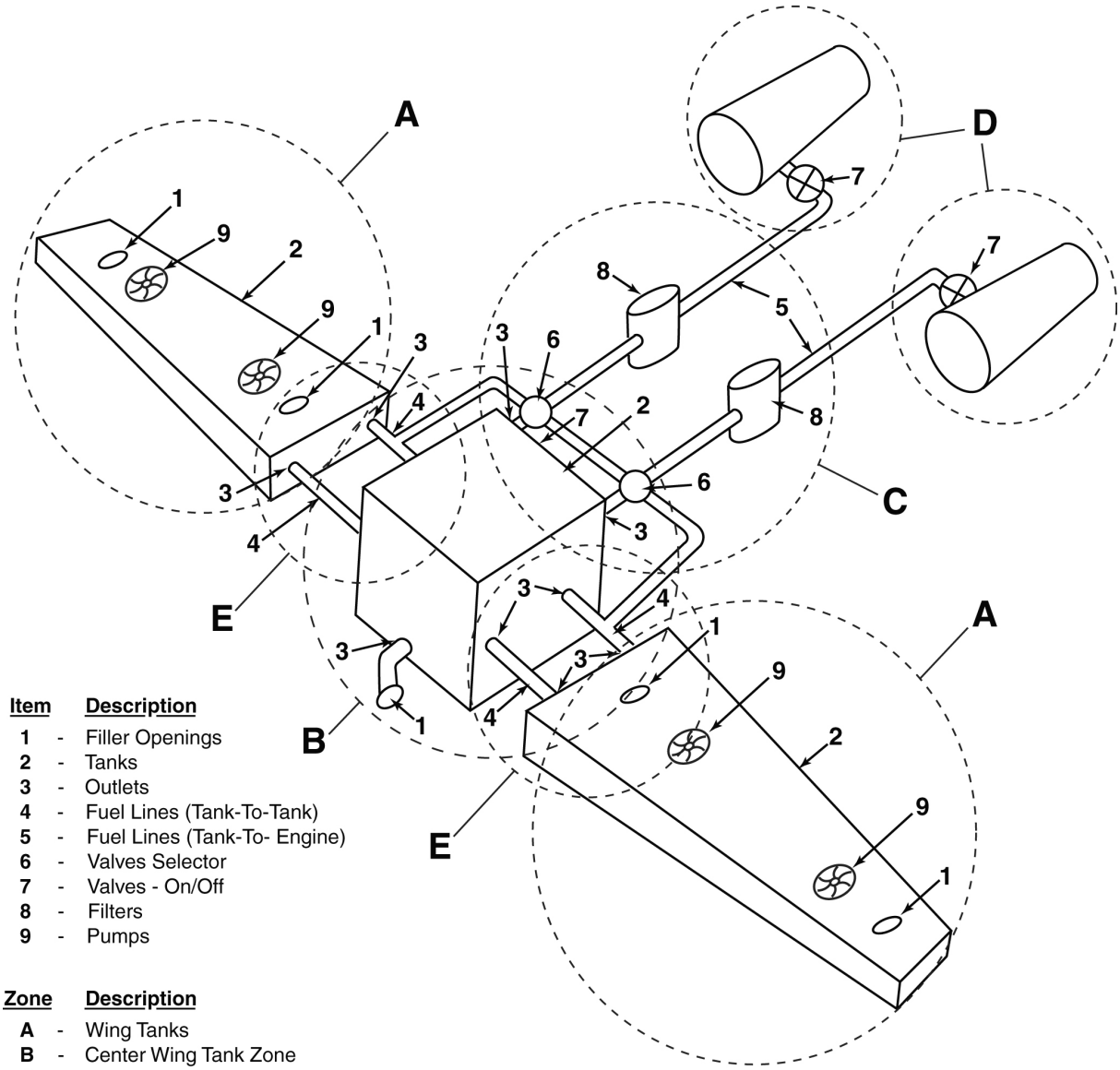

Item		Description
1	-	Filler Openings
2	-	Tanks
3	-	Outlets
4	-	Fuel Lines (Tank-To-Tank)
5	-	Fuel Lines (Tank-To- Engine)
6	-	Valves Selector
7	-	Valves - On/Off
8	-	Filters
9	-	Pumps

Zone		Description
A	-	Wing Tanks
B	-	Center Wing Tank Zone
C	-	Under Floor Zone, Except **B**
D	-	Engine Zone
E	-	Main Landing Gear Zone

FIGURE 7-1. HYPOTHETICAL TRANSPORT AIRPLANE FUEL SYSTEM WITH THE COMPONENTS AND HAZARDOUS AREAS IDENTIFIED

TABLE 7-3. SAMPLE HYPOTHETICAL FUEL SYSTEM FIRE HAZARD LEVEL—UNMODIFIED ORIGINAL

Item	Description	Percent FCS[1]	Percent LSCF[2]	Points FSOF[3]	Points EET[4]	Hazard Units[5]	Fire Hazard Level[6]	Percent Hazard Reduction[7]
1	Filler openings	50	50	8	8	4.00	5.45	N/A
2	Tanks	50	80	10	10	8.00	10.90	N/A
3	Outlets	90	90	10	10	16.20	22.07	N/A
4	Fuel lines (tank-to-tank)	50	90	10	10	9.00	12.26	N/A
5	Fuel lines (tank-to-engine)	80	30	8	8	3.84	5.23	N/A
6	Valves (selector)	80	75	10	7	10.20	13.90	N/A
7	Valves (firewall shutoff)	75	75	10	7	9.56	13.02	N/A
8	Filters	20	75	10	6	2.40	3.27	N/A
9	Pumps	80	75	10	7	10.20	13.90	N/A
					Totals	73.4	100.0	

Notes:

1. FCS = Likelihood of a component to fail and cause spillage
2. LSCF = Likelihood of spillage catching fire
3. FSOF = Likelihood of fire starting other fires
4. EET = Numeric code representing estimated escape time for occupants
5. Hazard Units = (FCS/100 x LSCF/100) x (FSOF + EET)
6. Fire Hazard Level =

$$\frac{\text{Hazard Units (by item)}}{\text{Hazard Units (total unmodified)}} \times 100$$

7. Percent Fire Hazard Reduction =

$$\frac{\text{Basic Hazard Level} - \text{Modified Hazard Level}}{\text{Basic Hazard Level}} \times 100$$

7.2.1.2 The Rating System.

The rating system evaluates the following four items:

a. The likelihood of fuel spillage occurring from the designated components and/or hazardous areas during the serious, marginally survivable crash.

b. The likelihood of fuel spillage from the designated component/area catching fire.

c. The likelihood of an existing fire that started at a designated component/area functioning as an ignition source for other probable spillages in other designated areas. (The chain reaction situation.)

d. The probable escape time available to occupants if a fire occurs at a designated component/area.

7.2.1.2.1 Failure of a Component Which Causes Spillage.

When rating the fuel system components and/or hazardous areas for the likelihood of fuel spillage during the serious, marginally survivable crash, the following items should be included in the evaluation:

a. Vulnerability of the component and/or area during impact.

- Location
- Specific component or area design

b. Probability that a destructive impact will occur. Each designated component/area is rated in each specific system configuration. The rating is given in the form of percentage of probable spillage occurrence. Example: If the designated component/area will cause spillage during every serious crash, it is given a 100% rating, whereas if it will cause spillage in only one out of every four accidents, it is given a rating of 25%.

7.2.1.2.2 Likelihood of Spillage Catching Fire.

When rating the fuel system components and/or hazardous areas for the likelihood of fuel spillage catching fire, the following items should be included in the evaluation.

a. Availability of ignition sources

- Type
- Available energy and duration
- Location

b. Size of fuel spill
c. Probable spillage paths

Spillage occurring at each designated component/area is rated in each specific system configuration. The rating is given in the form of percentages of probable ignition.

Example: If the spillage will catch fire every time during the serious crash environment, it is given a 100% rating. If it will ignite in only one out of every four accidents, it is given a rating of 25%.

7.2.1.2.3 Fire Starting Other Fires.

When rating the fuel system components and/or hazardous areas for the likelihood of an existing fire serving as an ignition source for other spillages, the following items should be included in the evaluation:

a. Location of fire
b. Size of fire
c. Location of other ignitable material
d. Possible spillage paths
e. Possible flame spread paths

Each fire is rated in each specific system configuration. The rating is given in the form of points. If an existing fire is 90% to 100% likely to ignite surrounding spillages, a rating of 10 is given. If the likelihood of an ignition chain reaction is 80% to 90%, a rating of 9 is given. The point rating decreases at the rate of 1 point per each 10% decrease in likelihood of occurrence, as shown below.

Likelihood of Fire Starting Other Fires Rating Points	Reaction Occurrence
10	90 - 100%
9	80 - 90%
8	70 - 80%
7	60 - 70%
6	50 - 60%
5	40 - 50%
4	30 - 40%
3	20 - 30%
2	10 - 20%
1	0 -10%

7.2.1.2.4 Estimated Escape Time.

When rating the fuel system components and/or hazardous areas for the probable escape time available to occupants if a fire occurs, the following items should be included in the evaluation:

a. Location of initial fire relative to the occupants
b. Growth potential of the fire

- Initial spillage quantity
- Sustained spillage quantity

c. Egress considerations

- Location of occupants relative to the escape routes

- Complexity of the escape (doors, hatches, handles, cargo, and other potentially delaying problems)

Each fire is rated in each specific system configuration. The rating is given in the form of points. If the escape time is estimated to be less than 20 seconds, the fire is given a rating of 10. If the escape time is more than 20 seconds, but less than 40 seconds, the fire is rated 9. The point rating decreases at the rate of 1 point for each 20 second increase in escape time as shown below.

Rating Points	Available Escape Time
10	0 - 20 seconds
9	20 - 40 seconds
8	40 - 60 seconds
7	60 - 80 seconds
6	80 - 100 seconds
5	100 - 120 seconds
4	120 - 140 seconds
3	140 - 160 seconds
2	160 - 180 seconds
1	180 -

For a discussion of why 180 seconds is chosen as the maximum time duration, see Escape Time Discussion, section 7.2.1.3.

7.2.1.2.5 Hazard Units.

Hazard units are arbitrary numbers derived by the following formula.

$$(FCS/100 \times LSCF/100) \times (FSOF + EET)$$

FCS = Rating in percent for each component/area when evaluated for the likelihood of the component "failing and causing spillage."

LSCF = Rating in percent for each component/area when evaluated for the "likelihood of the spillage catching fire."

FSOF = Rating in points for each fire when evaluated for the likelihood of "fire starting other fires."

EET = Rating in points for each fire when evaluated for "estimated escape time" for occupants.

7.2.1.2.6 Fire Hazard Level.

The fire hazard level is 100% for the complete, original fuel system design. For a specific component and/or designated area it is derived by the following formula:

$$FHL = \frac{\text{Component and/or area hazard units}}{\text{Total System hazard units}} \times 100$$

7.2.1.3 Escape Time Discussion.

The length of time required for evacuation from a crashed aircraft can differ for a variety of reasons. Examples include ratio of occupants to usable exits, ease of exit operation, interference

problems with things such as cargo, fire, etc., the degree of occupant injury, and the availability of rescue personnel.

Studies by the authors of this report and others of aircraft crash fire growth rates and of evacuation times used by survivors in over 4,500 air crashes have shown that most evacuations fall into one of two categories. Either the occupants are out of the aircraft within a few seconds to a minute or two, or they are in the aircraft for a much longer period of time—in some cases hours or days.

The growth rates of typical postcrash fires are such that they usually start out small, grow in intensity for several minutes, then start to subside. Man's ability to survive these fires is usually predicated on the clothing he is wearing, the air he is breathing, the temperature to which he is being exposed, and the duration of his exposure.

A summary of actual crash data, as well as experimental crash test data, indicates that three minutes is about as long as one can expect to survive in a major crash fire. In fact, the survival time will be much less in many crashes, due primarily to the close proximity of the fuel to the occupants.

For further study of the subject, the reader is referred to the scientific literature, much of which is summarized in volume v of the U.S. Army "Aircraft Crash Survival Design Guide," USAAVSCOM TR 89-D-22E [86], coauthored by the authors of this report. It is the basic handbook in the field and is available from the U.S. National Technical Information Service.

7.2.2 Example Fuel System Fire Hazard Level Evaluation.

The fuel system used as an example is shown in figure 7-1.

7.2.2.1 Fuel System Fire Hazard Level—Original System.

The original fuel system hazard level is shown in table 7-3. The fuel system items were evaluated in accordance with the procedures described under section 7.2.1. The table shows that the original fuel system has a total fire hazard level of 100%, and that the 100% level was derived from a hazard unit level of 73.4.

Study of the individual fire hazard level percentage clearly shows that item 3, fuel tank outlet, is the principal contributor to the fire problem. Items 4, 6, 7, and 9 are also major contributors, while Items 1, 2, 5, and 8 are much less hazardous.

7.2.2.2 Fuel System Fire Hazard Level—Modified System.

Once the evaluation process yields the fire hazard level for the original fuel system, design change options are theorized which, if implemented, will reduce the overall fire threat. For example, item 3 could be modified to greatly reduce fuel spillage during a crash by (1) using crash-resistant high-strength fittings in the tanks, (2) installing self-sealing breakaway valves at the couplings between the tanks and fuel lines and, (3) making the fuel lines from flexible, longer

hose to accommodate relative displacement between fuel system components. The rating for item 3 might be as shown in table 7-4, resulting in a fire hazard reduction of 99.8 percent for this one item only. However, the changes made would also reduce the fire hazard level of the fuel lines (item 4) by 75.1 percent, as shown in table 7-4. The effect of these changes would reduce the fire hazard level of the overall fuel system by 31 percent.

TABLE 7-4. SAMPLE HYPOTHETICAL FUEL SYSTEM FIRE HAZARD LEVEL—MODIFIED

Item	Description	Percent FCS[1]	Percent LSCF[2]	Points FSOF[3]	Points EET[4]	Hazard Units[5]	Fire Hazard Level[6]	Percent Hazard Reduction[7]
1	Filler openings	50	50	8	8	4.00	5.45	0
2	Tanks	50	80	10	10	8.00	10.90	0
3	Outlets	10	10	2	1	0.03	0.04	99.8
4	Fuel lines (tank-to-tank)	20	70	8	8	2.24	3.05	75.1
5	Fuel lines(tank-to-engine)	80	30	8	8	3.84	5.23	0
6	Valves (selector)	80	75	10	7	10.20	13.90	0
7	Valves (firewall shutoff)	75	75	10	7	9.56	13.02	0
8	Filters	20	75	10	6	2.40	3.27	0
9	Pumps	80	75	10	7	10.20	13.90	0
					Totals	50.47	68.76	31.24

Notes:

1. FCS = Likelihood of a component to fail and cause spillage
2. LSCF = Likelihood of spillage catching fire
3. FSOF = Likelihood of fire starting other fires
4. EET = Numeric code representing estimated escape time for occupants
5. Hazard Units = (FCS/100 x LSCF/100) x (FSOF + EET)
6. Fire Hazard Level =

$$\frac{\text{Hazard Units (by item)}}{\text{Hazard Units (total unmodified)}} \times 100$$

8. Percent Fire Hazard Reduction =

$$\frac{\text{Basic Hazard Level} - \text{Modified Hazard Level}}{\text{Basic Hazard Level}} \times 100$$

8. REGULATORY ISSUES.

8.1 INTRODUCTION.

Title 14 CFR Part 25—Airworthiness Standards: Transport Category Airplanes—originated as the recodification of CAR Part 4b following establishment of the Federal Aviation Administration by the Federal Aviation Act of 1958 (72 Stat. 731). In the 40+ years since its inception, 14 CFR Part 25 has been upgraded continually attempting to maintain currency with technological progress. Along the way it has been necessary for the FAA to issue Advisory Circulars (AC) to supplement the CFRs, principally defining acceptable means for compliance with the regulatory mandates. As the plethora of certification paperwork needed to supplement the actual CFRs grew, it became evident that designers, manufacturers, modifiers, operators, and even FAA certification officials themselves needed simpler access to certification history.

The FAA recently began a process by which historic certification documentation would be compiled into a series of documents according to category. Popularly titled "Mega-ACs," the program's initial products have been AC 29-2B (now – 2C) for Transport Rotorcraft certificated under 14 CFR Part 29, AC 27-1A for Normal Category Rotorcraft certificated under 14 CFR Part 27, and two of a proposed set of five ACs for Transport Category Airplanes certificated under 14 CFR Part 25 (see section 8.3.4 below). The initial round of Mega-ACs experienced some formatting and content quality inconsistencies between regional certification directorates. However, the ASW Rotorcraft Certification Directorate's revision of AC 29-2B to 29-2C in 2 years, incorporating major changes fed back from its constituency, demonstrates that these documents can be forged into much more user-friendly reference documents. It is believed that the FAA's efforts to collect all available certification data into a series of Mega-ACs will lead to greater productivity and less ambiguity than exist using the "old" system.

8.2 EXISTING 14 CFR PART 25 COVERAGE.

Amendment 25-91 [93] most recently amended §25.561 by increasing the "ultimate inertial forces" specified under which transport airplane structures must provide protection for occupants in a "minor crash landing" (not otherwise defined):

8.2.1 Subpart C–Structure—Emergency Landing Conditions.

FAR §25.561 General.

(a) The airplane, although it may be damaged in emergency landing conditions on land or water, must be designed as prescribed in this section to protect each occupant under those conditions.

(b) The structure must be designed to give each occupant every reasonable chance of escaping serious injury in a minor crash landing when -

(1) Proper use is made of seats, belts, and all other safety design provisions;

(2) The wheels are retracted (where applicable); and

(3) The occupant experiences the following ultimate inertia forces acting separately relative to the surrounding structure:

(i) Upward, 3.0 g

(ii) Forward, 9.0 g

(iii) Sideward, 3.0 g on the airframe; and 4.0 g on the seats and their attachments.

(iv) Downward, 6.0 g

(v) Rearward, 1.5 g

(c) For equipment, cargo in the passenger compartments and any other large masses, the following apply:

(1) Except as provided in paragraph (c)(2) of this section, these items must be positioned so that if they break loose they will be unlikely to:

(i) Cause direct injury to occupants;

(ii) Penetrate fuel tanks or lines or cause fire or explosion hazard by damage to adjacent systems; or

(iii) Nullify any of the escape facilities provided for use after an emergency landing.

(2) When such positioning is not practical (e.g., fuselage mounted engines or auxiliary power units) each such item of mass shall be restrained under all loads up to those specified in paragraph (b)(3) of this section. The local attachments for these items should be designed to withstand 1.33 times the specified loads if these items are subject to severe wear and tear through frequent removal (e.g., quick change interior items).

(d) Seats and items of mass (and their supporting structure) must not deform under any loads up to those specified in paragraph (b)(3) of this section in any manner that would impede subsequent rapid evacuation of occupants.

[Doc. No. 5066, 29 FR 18291, Dec. 24, 1964, as amended by Amdt. 25-23, 35 FR 5673, Apr. 8, 1970; Amdt. 25-64, 53 FR 17646, May 17, 1988; Amdt. 25-91, 62 FR 40706, July 29, 1997]

8.2.2 Other FAR Part 25 Sections.

Of the other 18 regulatory sections of 14 CFR Part 25 which apply to crashworthiness design issues affecting postcrash fires, four were updated in 1977, two in 1984, and one each in 1990, 1989, 1978, and 1972. The remaining eight are more than 30 years old. The significance of the superannuity of those design criteria lies in the fact that 1970 marked the transition to CRFSs in

the U.S. Army's helicopter fleet. Their introduction minimized unnecessary carnage generated by postcrash fires which resulted from spillage after fuel system damage in otherwise survivable accidents. Statistical study and advisory committee recommendations issued subsequent to the U.S. Army's rotorcraft initiatives have borne little fruit. (See other sections of this report.) The dearth of state-of-the-art CRFS design criteria in 14 CFR Part 25 compares poorly to the FAA's initiative in advancing rotorcraft CRFS design in 14 CFR Part 27, Normal Category Rotorcraft, and Part 29, Transport Category Rotorcraft.

8.2.2.1 Landing Gear.

§ 25.721 General.

(a) The main landing gear system must be designed so that if it fails due to overloads during takeoff and landing (assuming the overloads to act in the upward and aft directions), the failure mode is not likely to cause -

(1) For airplanes that have passenger seating configuration, excluding pilots seats, of nine seats or less, the spillage of enough fuel from any fuel system in the fuselage to constitute a fire hazard; and

(2) For airplanes that have a passenger seating configuration, excluding pilots seats, of 10 seats or more, the spillage of enough fuel from any part of the fuel system to constitute a fire hazard.

(b) Each airplane that has a passenger seating configuration, excluding pilots seats, of 10 seats or more must be designed so that, with the airplane under control, it can be landed on a paved runway with any one or more landing gear legs not extended without sustaining a structural component failure that is likely to cause the spillage of enough fuel to constitute a fire hazard.

(c) Compliance with the provisions of this section may be shown by analysis or tests, or both.

[Amdt. 25-32, 37 FR 3969, Feb. 24, 1972]

8.2.2.2 Fuel System.

§ 25.963 Fuel tanks: general.

(a) Each fuel tank must be able to withstand, without failure, the vibration, inertia, fluid, and structural loads that it may be subjected to in operation.

(b) Flexible fuel tank liners must be approved or must be shown to be suitable for the particular application.

(c) Integral fuel tanks must have facilities for interior inspection and repair.

(d) Fuel tanks within the fuselage contour must be able to resist rupture and to retain fuel, under the inertia forces prescribed for the emergency landing conditions in § 25.561. In addition, these tanks must be in a protected position so that exposure of the tanks to scraping action with the ground is unlikely.

(e) Fuel tank access covers must comply with the following criteria in order to avoid loss of hazardous quantities of fuel:

(1) All covers located in an area where experience or analysis indicates a strike is likely must be shown by analysis or tests to minimize penetration and deformation by tire fragments, low energy engine debris, or other likely debris.

(2) All covers must be fire resistant as defined in part 1 of this section.

(f) For pressurized fuel tanks, a means with fail-safe features must be provided to prevent the buildup of an excessive pressure difference between the inside and the outside of the tank.

[Doc. No. 5066, 29 FR 18291, Dec. 24, 1964, as amended by Amdt. 25-40, 42 FR 15043, Mar. 17, 1977; Amdt. 25-69, 54 FR 40352, Sept. 29, 1989]

§ 25.965 Fuel tank tests.

(a) It must be shown by tests that the fuel tanks, as mounted in the airplane, can withstand, without failure or leakage, the more critical of the pressures resulting from the conditions specified in paragraphs (a)(1) and (2) of this section. In addition, it must be shown by either analysis or tests, that tank surfaces subjected to more critical pressures resulting from the condition of paragraphs (a)(3) and (4) of this section, are able to withstand the following pressures:

(1) An internal pressure of 3.5 psi.

(2) 125 percent of the maximum air pressure developed in the tank from ram effect.

(3) Fluid pressures developed during maximum limit accelerations, and deflections, of the airplane with a full tank.

(4) Fluid pressures developed during the most adverse combination of airplane roll and fuel load.

(b) Each metallic tank with large unsupported or unstiffened flat surfaces, whose failure or deformation could cause fuel leakage, must be able to withstand the following test, or its equivalent, without leakage or excessive deformation of the tank walls:

(1) Each complete tank assembly and its supports must be vibration tested while mounted to simulate the actual installation.

(2) Except as specified in paragraph (b)(4) of this section, the tank assembly must be vibrated for 25 hours at an amplitude of not less than 1/32 of an inch (unless another amplitude is substantiated) while 2/3 filled with water or other suitable test fluid.

(3) The test frequency of vibration must be as follows:

(i) If no frequency of vibration resulting from any rpm within the normal operating range of engine speeds is critical, the test frequency of vibration must be 2,000 cycles per minute.

(ii) If only one frequency of vibration resulting from any rpm within the normal operating range of engine speeds is critical, that frequency of vibration must be the test frequency.

(iii) If more than one frequency of vibration resulting from any rpm within the normal operating range of engine speeds is critical, the most critical of these frequencies must be the test frequency.

(4) Under paragraphs (b)(3) (ii) and (iii) of this section, the time of test must be adjusted to accomplish the same number of vibration cycles that would be accomplished in 25 hours at the frequency specified in paragraph (b)(3)(i) of this section.

(5) During the test, the tank assembly must be rocked at the rate of 16 to 20 complete cycles per minute, through an angle of 15° on both sides of the horizontal (30° total), about the most critical axis, for 25 hours. If motion about more than one axis is likely to be critical, the tank must be rocked about each critical axis for 12 1/2 hours.

(c) Except where satisfactory operating experience with a similar tank in a similar installation is shown, nonmetallic tanks must withstand the test specified in paragraph (b)(5) of this section, with fuel at a temperature of 110° F. During this test, a representative specimen of the tank must be installed in a supporting structure simulating the installation in the airplane.

(d) For pressurized fuel tanks, it must be shown by analysis or tests that the fuel tanks can withstand the maximum pressure likely to occur on the ground or in flight.

[Doc. No. 5066, 29 FR 18291, Dec. 24, 1964, as amended by Amdt. 25-11, 32 FR 6913, May 5, 1967; Amdt. 25-40, 42 FR 15043, Mar. 17, 1977]

§ 25.967 Fuel tank installations.

(a) Each fuel tank must be supported so that tank loads (resulting from the weight of the fuel in the tanks) are not concentrated on unsupported tank surfaces. In addition -

(1) There must be pads, if necessary, to prevent chafing between the tank and its supports;

(2) Padding must be nonabsorbent or treated to prevent the absorption of fluids;

(3) If a flexible tank liner is used, it must be supported so that it is not required to withstand fluid loads; and

(4) Each interior surface of the tank compartment must be smooth and free of projections that could cause wear of the liner unless -

(i) Provisions are made for protection of the liner at these points; or

(ii) The construction of the liner itself provides that protection.

(b) Spaces adjacent to tank surfaces must be ventilated to avoid fume accumulation due to minor leakage. If the tank is in a sealed compartment, ventilation may be limited to drain holes large enough to prevent excessive pressure resulting from altitude changes.

(c) The location of each tank must meet the requirements of § 25.1185(a).

(d) No engine nacelle skin immediately behind a major air outlet from the engine compartment may act as the wall of an integral tank.

(e) Each fuel tank must be isolated from personnel compartments by a fumeproof and fuelproof enclosure.

§ 25.975 Fuel tank vents and carburetor vapor vents.

(a) Fuel tank vents. Each fuel tank must be vented from the top part of the expansion space so that venting is effective under any normal flight condition. In addition -

(1) Each vent must be arranged to avoid stoppage by dirt or ice formation;

(2) The vent arrangement must prevent siphoning of fuel during normal operation;

(3) The venting capacity and vent pressure levels must maintain acceptable differences of pressure between the interior and exterior of the tank, during -

(i) Normal flight operation;

(ii) Maximum rate of ascent and descent; and

(iii) Refueling and defueling (where applicable);

(4) Airspaces of tanks with interconnected outlets must be interconnected;

(5) There may be no point in any vent line where moisture can accumulate with the airplane in the ground attitude or the level flight attitude, unless drainage is provided; and

(6) No vent or drainage provision may end at any point -

(i) Where the discharge of fuel from the vent outlet would constitute a fire hazard; or

(ii) From which fumes could enter personnel compartments.

(b) Carburetor vapor vents. Each carburetor with vapor elimination connections must have a vent line to lead vapors back to one of the fuel tanks. In addition -

(1) Each vent system must have means to avoid stoppage by ice; and

(2) If there is more than one fuel tank, and it is necessary to use the tanks in a definite sequence, each vapor vent return line must lead back to the fuel tank used for takeoff and landing.

§ 25.993 Fuel system lines and fittings.

(a) Each fuel line must be installed and supported to prevent excessive vibration and to withstand loads due to fuel pressure and accelerated flight conditions.

(b) Each fuel line connected to components of the airplane between which relative motion could exist must have provisions for flexibility.

(c) Each flexible connection in fuel lines that may be under pressure and subjected to axial loading must use flexible hose assemblies.

(d) Flexible hose must be approved or must be shown to be suitable for the particular application.

(e) No flexible hose that might be adversely affected by exposure to high temperatures may be used where excessive temperatures will exist during operation or after engine shut down.

(f) Each fuel line within the fuselage must be designed and installed to allow a reasonable degree of deformation and stretching without leakage.

[Doc. No. 5066, 29 FR 18291, Dec. 24, 1964, as amended by Amdt. 25-15, 32 FR 13266, Sept. 20, 1967]

§ 25.994 Fuel system components.

Fuel system components in an engine nacelle or in the fuselage must be protected from damage which could result in spillage of enough fuel to constitute a fire hazard as a result of a wheels up landing on a paved runway.

[Amdt. 25-57, 49 FR 6848, Feb. 23, 1984]

§ 25.995 Fuel valves.

In addition to the requirements of § 25.1189 for shutoff means, each fuel valve must -

(a) [Reserved]

(b) Be supported so that no loads resulting from their operation or from accelerated flight conditions are transmitted to the lines attached to the valve.

[Doc. No. 5066, 29 FR 18291, Dec. 24, 1964, as amended by Amdt. 25-40, 42 FR 15043, Mar. 17, 1977]

§ 25.997 Fuel strainer or filter.

There must be a fuel strainer or filter between the fuel tank outlet and the inlet of either the fuel metering device or an engine driven positive displacement pump, whichever is nearer the fuel tank outlet. This fuel strainer or filter must -

(c) Be mounted so that its weight is not supported by the connecting lines or by the inlet or outlet connections of the strainer or filter itself, unless adequate strength margins under all loading conditions are provided in the lines and connections.

[Amdt. No. 25-36, 39 FR 35460, Oct. 1, 1974, as amended by Amdt. 25-57, 49 FR 6848, Feb. 23, 1984]

§ 25.999 Fuel System Drains.

(b) Each drain required by paragraph (a) of this section must –

(3) Have a drain valve –

(ii) That is either located or protected to prevent fuel spillage in the event of a landing with landing gear retracted.

[Doc. No. 5066, 29FR18291, Dec. 24, 1964 as amended by Amdt. 25-38, 41FR55467, Dec. 20, 1976]

8.2.2.3 Oil System.

§ 25.1013 Oil tanks.

Installation. Each oil tank installation must meet the requirements of § 25.967….

(c) Filler connection. Each recessed oil tank filler connection that can retain any appreciable quantity of oil must have a drain that discharges clear of each part of the airplane. In addition, each oil tank filler cap must provide an oiltight seal.

(d) Vent. Oil tanks must be vented as follows:

Each oil tank must be vented from the top part of the expansion space so that venting is effective under any normal flight condition.

(f) Flexible oil tank liners. Each flexible oil tank liner must be approved or must be shown to be suitable for the particular application.

[Doc. No. 5066, 29 FR 18291, Dec. 24, as amended by Amdt. 25-19, 33 FR 15410, Oct. 17, 1968; Amdt. 25-23, 35 FR 5677, Apr. 8, 1970; Amdt. 25-36, 39 FR 35460, Oct. 1, 1974; Amdt. 25-57, 49 FR 6848, Feb. 23, 1984; Amdt. 25-72, 55 FR 29785, July 20, 1990]

§ 25.1017 Oil lines and fittings.

(a) Each oil line must meet the requirements of § 25.993 and each oil line and fitting in any designated fire zone must meet the requirements of § 25.1183.

(b) Breather lines must be arranged so that -

(1) Condensed water vapor that might freeze and obstruct the line cannot accumulate at any point;

(2) The breather discharge does not constitute a fire hazard if foaming occurs or causes emitted oil to strike the pilot's windshield; and

(3) The breather does not discharge into the engine air induction system.

8.2.3 Subpart F – Equipment.

General

§ 25.1309 Equipment, systems, and installations.

(a) The equipment, systems, and installations whose functioning is required by this subsection, must be designed to ensure that they perform their intended functions under any foreseeable operating condition.

(b) The airplane systems and associated components, considered separately and in relation to other systems, must be designed so that -

(1) The occurrence of any failure condition which would prevent the continued safe flight and landing of the airplane is extremely improbable, and

(2) The occurrence of any other failure conditions which would reduce the capability of the airplane or the ability of the crew to cope with adverse operating conditions is improbable….

(d) Compliance with the requirements of paragraph (b) of this section must be shown by analysis, and where necessary, by appropriate ground, flight, or simulator tests. The analysis must consider -

(1) Possible modes of failure, including malfunctions and damage from external sources.

(2) The probability of multiple failures and undetected failures.

(3) The resulting effects on the airplane and occupants, considering the stage of flight and operating conditions….

[Amdt. 25-23, 35 FR 5679, Apr. 8, 1970, as amended by Amdt. 25-38, 41 FR 55467, Dec. 20, 1976; Amdt. 25-41, 42 FR 36970, July 18, 1977]

§ 25.1453 Protection of oxygen equipment from rupture.

Oxygen pressure tanks, and lines between tanks and the shutoff means, must be -

(a) Protected from unsafe temperatures; and

(b) Located where the probability and hazards of rupture in a crash landing are minimized.

8.3 OTHER FAA AND DEPARTMENT OF TRANSPORTATION (DOT) GUIDANCE MATERIAL.

8.3.1 Advisory Circular 25.994-1: Design Considerations to Protect Fuel Systems During a Wheels Up Landing [94].

AC 25.994-1 was issued in July 1986 in response to "…inquiries [which] made it obvious that a description of the wheels up landing condition and the maximum loads to be used for the fuel system components should have been established." [Authors' Note: The inquiries were submitted shortly after 14 CFR §25.994 was incorporated into the regulations by Amendment 25-23 in April 1970. The FAA offers no explanation for the 16-year delay.]

AC 25.994-1 presents the following guidance:

4. Discussion

Section 25.994 requires that the fuel system components in an engine nacelle or in the fuselage be protected from damage which could result in the spillage of enough fuel to constitute a fire hazard. Fuel is the most likely cause of a fire following a wheels up landing if the fuel system components in the engine nacelles and the fuselage are damaged to the extent that fuel is released. Therefore, the location and routing of fuel system components in the engine nacelle and fuselage should be evaluated with respect to the runway scraping action that may be encountered and the resultant structural distortion that may occur. The components which cannot be located to protect them from likely damage in a wheels up landing should be designed to minimize fuel spillage and leakage into zones of possible or likely ignition sources. The probable migration of fuel should be evaluated and those zones where fuel is likely to enter should not have potential ignition sources. Equipment in such areas should be explosion proof, hermetically sealed, or otherwise qualified to operate in a flammable fluid leakage zone.

Fuel system components and likely ignition sources (electrical arcing and high temperature surfaces (above 400°F)) that should be investigated include fuel shutoff valves, couplings, fittings, lines, electrical wiring, electric power cables, electric motors, electric motor driven pumps, hot air conditioning ducts and engine bleed air ducts. Many of these components are installed in, or routed through areas susceptible to damage resulting from a wheels up landing.

For the purposes of this AC, a wheels up landing is defined as a landing on a paved runway under a controlled emergency landing condition as described in Sec. 25.561. The damage that may be sustained in a full gear up landing or other failed configurations, such as one or two gears extended or all gears collapsed, cannot be precisely determined. However, a reasonable design effort to protect fuel system components for the all wheels up landing should minimize the extent of component damage for the other gear failure configurations.

5. Acceptable Means of Compliance

The airplane fuel system should be designed to minimize the spilling or leaking of fuel from damaged components during and following a wheels up landing. The unpreventable release of fuel, such as from severed or punctured fuel lines downstream from shutoff valves, should be diverted or excluded to the maximum extent practicable from spreading to likely ignition sources.

Fuel lines and fuel system components should be located and routed as far as practicable from likely impact areas where structural deformation may cause crushing, severing, punctures or high tensile loads in the lines.

> Fuel lines should be constructed to protect their integrity during and after a wheels up landing. Flexible and stretchable hoses should be used and the fuel line should be designed to allow stretching or movement with the deformed structure up to an amount likely to be required to prevent failure under high tensile or shear loading. Flexible hoses should also be designed and qualified to absorb the energy that would likely be imparted to the component or fuel line from direct impact resulting from structural failure.
>
> Fuel lines and fuel system components within the engine nacelle should be arranged and protected to the maximum extent possible so that spilled fuel caused by damage to lines or components from a wheels up landing is not likely to contact hot engine surfaces (over 400°F). Fuel lines and components should be shrouded and drained to accomplish this protection.
>
> In areas of the engine nacelles, pylons, and airplane fuselage that are susceptible to being damaged by a wheels up landing, fuel lines and electrical wiring should be isolated, separated and routed to the maximum extent practicable, to minimize the hazards of spilled fuel flowing into an area containing a potential ignition source. In addition, electrical components should be acceptable for operation in flammable leakage zones identified in accordance with Sec. 25.863.
>
> Shielding and drainage may be used wherever it is considered appropriate to prevent spilled fuel from spreading to potential ignition sources or occupied areas. Drip fences and drainage troughs can be used to divert flow of spilled fuel from potential ignition sources such as hot engine cases, electrical accessories, and component compartments. Nonconductive material should be used to shroud electrical wiring that might be damaged by deforming structure.
>
> Fuel shutoff valves should not be located within engine nacelles, pylon areas or adjacent to engine air intakes and exhausts where they may be subjected to damage from impact and scraping action during a wheels up landing. Fuel shutoff valve mountings should, as a minimum, be designed for the inertial loads listed in Sec. 25.561 unless the location and estimated loads in the area impose a greater strength requirement to maintain the shutoff valve mounting integrity.
>
> Installation of auxiliary fuel tanks and systems in the fuselage should be based on the guidance and information in AC 25-8, Auxiliary Fuel System Installations.

It is instructive to compare the content of Advisory Circular 25.994-1, which is merely advisory "guidance" for airworthiness design of transport category airplanes, with the content of 14 CFR §§27.952 and 29.952, which are identical regulatory requirements for airworthiness design of normal and transport category rotorcraft, respectively; e.g.,:

> Fuel line self-sealing breakaway couplings. Self-sealing breakaway couplings ***must be installed*** unless hazardous relative motion of fuel system components to each other or to local rotorcraft structure ***is demonstrated to be extremely***

improbable or unless other means are provided. The couplings or equivalent devices ***must be installed*** at all fuel tank-to-fuel line connections, tank-to-tank interconnects, and at other points in the fuel system where local structural deformation could lead to the release of fuel.

Frangible or deformable structural attachments. Unless hazardous relative motion of fuel tanks and fuel system components to local rotorcraft structure ***is demonstrated to be extremely improbable*** in an otherwise survivable impact, frangible or locally deformable attachments of fuel tanks and fuel system components to local rotorcraft structure ***must be used***. The attachment of fuel tanks and fuel system components to local rotorcraft structure, whether frangible or locally deformable, ***must be designed*** such that its separation or relative local deformation will occur without rupture or local tearout of the fuel tank or fuel system components that will cause fuel leakage. [*Emphases added by the authors of this report*]

8.3.2 Advisory Circular 25.963-1: Fuel Tank Access Covers [95].

AC 25.963-1 was issued in July 1992 to provide guidance for complying with the certification requirements of 14 CFR Part 25.963(e) for fuel tank access covers for turbine-powered transport category airplanes. 14 CFR Part 25.963(e) was incorporated by Amendment 25-69, 54 FR 40352, Sept. 29, 1989, following a fatal accident at Manchester, UK, in which debris penetrated underwing fuel tank access covers of a B-737 following engine failure, causing massive fuel spillage and subsequent fire. (See section 4)

AC 25.963-1 provides the following guidance:

4. Impact Resistance

All fuel tank access covers must be designed to minimize penetration and deformation by tire fragments, low energy engine debris, or other likely debris, unless the covers are located in an area where service experience indicates a strike is not likely. [AUTHORS' NOTE: *Note that this "not likely" evaluation criterion is inconsistent with criteria set forth in FAR §25.1309 and AC 23.1309-1C; e.g., "probable," "improbable" or "extremely improbable".*] The rule does not specify rigid standards for impact resistance because of the wide range of likely debris which could impact the covers. The applicant should, however, choose to "minimize penetration and deformation" by testing covers using debris of a type, size, trajectory, and velocity that represent conditions anticipated in actual service for the airplane model involved. The access covers, however, need not be more impact resistant than the contiguous tank structure.

The requirement that the impact resistance of the tank access cover be equivalent to the impact resistance of "the contiguous tank structure" is illogical unless one considers merely the condition in which the tanks are integral to the structure. For example, the impact resistance of an integral tank access cover should logically replicate the impact resistance of the skins which form the tank wall. It does not follow that an access cover over a CRFS-qualified bladder tank should demonstrate impact resistance equal to that of the bladder tank.

8.3.3 Advisory Circular 25-8: Auxiliary Fuel System Installations [96].

AC 25-8 was issued on May 2, 1986. It provides guidance on acceptable means of compliance with FAR requirements for installation of auxiliary fuel systems in transport category airplanes. AC 25-8 defines "Auxiliary fuel system" as:

> … a system installed within the airplane which makes additional fuel available for increasing the flight range of that airplane. The term 'auxiliary' means that this system is secondary to and backed by the airplane's essential fuel system, i.e., that the functions of the essential fuel system are immediately available and operative without immediate supervision by the flight crew in the event of failure or inadvertent depletion of fuel in the auxiliary fuel system (reference §25.955(b)(2)). In essence, an airplane equipped with an auxiliary fuel system is capable of safe flight even when the auxiliary fuel system is not used, i.e., where its fuel storage capacity is not required for short range flight. (AC 25-8; Appendix 1)

Despite substantial and detailed guidance on design, construction, installation, and use of auxiliary fuel systems, AC 25-8 is strangely silent with reference to known (and proved) standards for crash-resistant fuel system design. For example, Chapter 1 of AC 25-8, titled "Fuel System Installation Integrity and Crashworthiness," contains no references whatsoever to CRFS design, evaluation, and testing criteria established in MIL-STD-1290A [97], TR-89-D22E, Aircraft Crash Survival Design Guide, [86], ADS-11 [91] or ADS-36 [98]. Although these documents are admittedly directed specifically toward rotary-wing aircraft crashworthy fuel systems, the principles therein are universally applicable. In particular, the Postcrash Fire Potential Rating methodology of ADS-11 and ADS-36's methods for testing fuel systems, subsystems, and components could easily be adapted to provide more robust criteria for evaluating the crash-resistant design of auxiliary fuel systems in transport category airplanes.

Detailed CRFS component design criteria contained in MIL-T-27422B [30] on the subject of crash-resistant fuel tanks, and other standards relating to valves and hoses and their preferred installation parameters, could potentially be as effective in mitigating some postcrash fires in transport category airplanes as they have been in helicopters. It was considered significant that the SAE G-9 Fuel Tank Bladder Sub-Committee has reached consensus on a new fuel tank specification (MIL-PRF-27422) that essentially reiterates the technical details of MIL-T-27422B.

8.3.4 New FAA Advisory Circulars Pertaining to Transport Airplane Certification: The Mega-ACs.

The Mega-AC concept came to fruition subsequent to the demise of NPRM 89-11 (see section 8.4.4). During efforts to "normalize" airworthiness regulations with the European Community (EC), FAA management became aware that many previously accepted means for regulatory compliance had never been memorialized in a format conveniently accessible by entities who need to use the information. The objective of the Mega-AC initiative was to compile all known historic information on regulatory intent, and currently accepted certification practices, into single-source documents available to all potential users.

The first attempted Mega-AC on the market was AC 29-2B, relating to transport category rotorcraft, which was released on July 30, 1997. Subsequent feedback led to a streamlined and more user-friendly AC 29-2C and AC 27-1B for normal category rotorcraft.

Five transport airplane Mega-ACs are contemplated by the FAA ANM Transport Airplane Certification Office. (See reference 99 paragraph 4.a., p. II.) Each will address one technical regulatory area pertaining to transport airplanes:

> Certification of Transport Airplane Structure (AC 25-21);
>
> Certification of Transport Airplane Mechanical Systems (AC 25-22);
>
> Certification of Electrical Equipment Installation (Proposed AC 25-XX);
>
> Transport Airplane Propulsion Engine and Auxiliary Power Unit Installation Certification Handbook (Proposed AC 25-XX); and
>
> Transport Airplane Cabin Interiors Handbook (Proposed AC 25-17A).

According to the FAA/AVR/AIR web site, at this writing (July 2000) only ACs 25-21 and 25-22 have been issued. Comment period closed on February 4, 2000, for AC 25-17A, Transport Airplane Cabin Interiors Handbook. A draft of Mega-AC 25-XX, Transport Airplane Propulsion Engine and Auxiliary Power Unit Installation Certification Handbook, was issued for which the comment period closed on December 29, 1999. At some 1200 pages, this draft Mega-AC was criticized for being unwieldy and cumbersome. It has been temporarily withdrawn, although the full text is available on the FAA web site. The web site contains no current status for AC 25-XX, Certification of Electrical Equipment Installation.

The FAA plans an additional Mega-AC 33-XX pertaining to aircraft engines.

8.3.4.1 Advisory Circular 25-21: Certification of Transport Airplane Structure [100].

AC 25-21, dated September 1, 1999, has as its purpose to provide:

> …methods acceptable to the Administrator for showing compliance with the provisions of subparts C and D of 14 CFR part 25 regarding the type certification requirements for transport airplane structure. This AC is intended to provide guidance to airplane manufacturers, modifiers, foreign regulatory authorities, and Federal Aviation Administration (FAA) transport airplane type certification engineers and their designees. The methods and procedures described herein have evolved over many years and represent current certification practice. Like all advisory material, these guidelines are not mandatory and do not constitute regulations. They are derived from previous FAA experience in finding compliance with the airworthiness requirements and represent methods and procedures found to be acceptable by that experience.

Among AC 25-21's related documents specified in paragraph 3 therein, are:

- Title 14 Code of Federal Regulations (14 CFR). Sections which prescribe requirements for the design, substantiation, and certification of airplane structure, landing gear, and control systems include all sections within subpart C, Structure and subpart D, Design and Construction, except for the crashworthiness standards listed in Sections 810 – 819.

- Industry Documents. Military specification handbooks relevant to flight vehicles.

AC 25-21 also incorporates material relating to other Title 14 CFR sections outside of those subparts:

- Subpart E – Powerplant: §25.963 – Fuel Tanks: General
- Subpart G – Operating Limitations and Information:

  – §25.1517 – Rough Air Speed, V_{RA}
  – §25.1529 and Appendix H – Instructions for Continued Airworthiness

AC 25-21 guidance refers only to three of the 14 CFR Part 25 sections previously cited as relevant to transport airplane design factors affecting fuel system crashworthiness and postcrash fires:

- Subpart C - Structure: Emergency Landing Conditions—§25.561– General
- Subpart D - Design and Construction: Landing Gear—§25.721 – General
- Subpart E - Powerplant: Fuel Tanks—§25.963 – General

Unfortunately, AC 25-21 offers very little in the way of guidance toward an acceptable means of compliance for any of these sections. For example, in addition to the text of the FAR sections cited, AC 25-21 adds the following "guidance" material:

- For FAR §25.561:

  b. Intent of Rule. The purpose of this rule is to ensure that occupants will have a reasonable chance of escaping serious injury after an emergency landing on either land or water.

  c. Background. This rule was carried forward from § 4b.260 of the Civil Air Regulations (CAR). Amendment 25-23 made minor editorial changes for clarification. Amendment 25-64 increased the inertia load factors in the upward, sideward, and downward directions and added a rearward load factor. Amendment 25-64 also removed the reference to the five f.p.s. ultimate descent velocity. Amendment 25-91 provided a factor of 1.33 for frequently removed items.

d. Acceptable Compliance Methods. For guidance on compliance with this requirement, refer to the preamble of Amendment 25-23, 35 FR 5673, April 8, 1970; Amendment 25-64, 53 FR 17646, May 17, 1988; and Amendment 25-91, 62 FR 40702, July 29, 1997.

- References. None.

Attempts to locate any implementation guidance for FAR §25.561 in Amendment 25-91 (the latest applicable regulatory revision) proved futile. The Amendment merely alludes in passing to the revision's newly imposed structural load limits, noting the purpose of the change was to achieve harmonization with European regulators via the Joint Airworthiness Requirements (JARs).

- For FAR §25.721:

Intent of Rule. The purpose of this rule is to insure that if the landing gear fails due to overloads during takeoff and landing, the failure itself will not cause the spillage of enough fuel from any part of the fuel system to constitute a fire hazard.

Background. This rule was added by Amendment 25-15 (Sept. 20, 1967). Amendments 25-23 2532 *(sic)* extended the application of the rule to include all fuel systems.

e. Acceptable Compliance Methods. For guidance on compliance with this requirement, refer to the preamble of Amendment 25-15, 32 FR 13262, September 20, 1967; Amendment 25-23, 35 FR 5676, April 8, 1970; and Amendment 25-32, 37 FR 3969, February 24, 1972. [AUTHORS' NOTE: *None of these Amendments are readily available via Internet, or any other easily accessible source. See below.*]

f. References. None

- For FAR §25.963:

b. Intent of Rule. The purpose of this rule is to ensure structural integrity of the fuel tanks under all likely operating conditions, including emergency landing conditions.

c. Background. This rule was carried forward from § 4b.420 of the Civil Air Regulations (CAR). Amendment 25-40 removed the requirements pertaining to the augmentation liquid tank capacity. Amendment 25-69 added the requirements pertaining to fuel tank access covers.

d. Acceptable Compliance Methods. Advisory Circular (AC) 25-963-1, or latest revision, provides guidance information for showing compliance with the impact and fire resistance requirements of 25.963(e). Fuel tank access covers must be fire resistant and meet the impact criteria specified in Advisory Circular 25.963-1,

or latest revision. Compliance with this requirement may be shown by test(s) and/or analysis.

References. Advisory Circular 25.963-1, or latest revision, Fuel Tank Access Covers, and AC 25-XX, Transport Airplane Propulsion, Engine, and APU Certification Handbook.

Searches for text of early CFR Amendments or issues of the Federal Register at easily accessible locations proved fruitless. The U.S. Government Printing Office Internet site contains references from 1994 forward only. Summit Aviation's Computerized Aviation Reference Library CD contains references from 1990 forward only. According to the GPO Access Support Team, official federal regulatory documents issued prior to 1994 "…may be available at a Federal Depository Library." *(emphasis added by the authors of this report)* Historical FAA/GPO paper-copy subscription services remain available as a source for complete revision histories of selected Parts of the FARs. These documents should be made available publicly via the Internet.

8.3.4.2 Advisory Circular 25-22: Certification of Transport Airplane Mechanical Systems [99].

The stated purpose of AC 25-22, dated March 14, 2000, is to provide "… methods acceptable to the Administrator for showing compliance with the type certification requirements for transport airplane mechanical systems and equipment installations." AC 25-22 opens at 14 CFR 25.671 in the control systems subdivision of Subpart D—Design and Construction, of 14 CFR Part 25 and encompasses 46 CFR sections through §25.1529: "Instructions for Continuing Airworthiness."

Of title 14 CFR sections previously cited as relating to CRFS, only §§25.1309, 25.1450, and 25.1453 are cited in AC 25-22.

Comments at 48.d. (pp. 128-130) relating to 14 CFR 25.1309 appear to raise more questions than they answer about the acceptability of competing methodologies for demonstrating compliance with certification criteria (e.g., qualitative vs. quantitative):

Policy/Compliance Methods. The term "subsection" in §25.1309(a) is intended to cover not only subsection "C", but also the equipment, systems, and installations not specifically required by subsection "C" but installed in airplanes in order to engage in operations covered by other subsections. Dependence for safety of flight might be placed on installations not otherwise mentioned in the rules.

Probability of a Fire. The following is extracted from an FAA memorandum, dated March 9, 1995. This is in response to a request for guidance regarding the use of the probability of a fire in a failure analysis when showing compliance with §25.1309. The focus of the request was directed at the three issues addressed below:

The first issue concerns whether the occurrence of a cargo compartment fire should be considered to have a probability of one, or something less than one. Advisory Circular (AC) 25.1309-1A, paragraph 8e, "Operational and Environmental Conditions", allows that random conditions may be considered to have a probability of occurrence less than one, and may usually be included in a safety analysis. The

AC indicates that a random condition is a condition for which the airplane is not designed, and in which the airplane is not normally approved to operate. It also indicates that a random condition may be used in the analysis even when the system under analysis is designed to protect against the occurrence of the random condition. The AC provides, as an example, that it would be reasonable and rational to use a probability of less than one of encountering hazardous turbulence or gust levels after the failure of a structural load alleviation system. A probability less than one of fire occurring after a failure of the fire protection system is similar to this example, and may be used in the analysis. Advisory Circular 25.1309-1A also provides counter-examples for conditions which should not be considered random, and for which a probability of one should be used. These are conditions for which the airplane is designed. The examples provided, instrument meteorological conditions and Category III weather operations, are conditions in which the airplane would be expected to operate as a matter of course, and for which operational approval would be granted.

The second issue concerns what value less than one should be assigned to the probability of occurrence of a fire. Advisory Circular 25.1309-1A, paragraph 8e, provides guidance that the statistically-derived probability used in the analysis should be based on an applicable supporting database and a valid statistical distribution. When requesting approval for the use of the probability of a random condition in a safety analysis, it is incumbent on the applicant to supply the data, show the applicability of the database from which the data is supplied, and derive a valid statistical conclusion. The ACO (Aircraft Certification Office) should then evaluate the applicant's statistical information and determine if the value used in the analysis is supported by the data presented. This value must be reassessed for subsequent programs, as service experience gained in the future may require the probability of the occurrence to be re-evaluated.

The third issue is whether the required safety level reached through the use of the Maintenance Steering Group, Revision 3 (MSG-3) procedures is higher than that reached using a §25.1309 analysis. We contend that this is not so, and that a like-comparison of the two sets of procedures is not valid. The §25.1309 analysis process is directed at assessing the contributions of failures to given failure conditions, and to directing the airplane or system design appropriately. The MSG-3 process is directed at determining appropriate maintenance actions given the contribution of a failure to a reduction in safety. Findings from the §25.1309 analysis process are used as starting points for certain MSG-3 processes to determine maintenance activities and intervals, or whether the maintenance process can adequately minimize the risk elements assigned to it. The MSG-3 procedures must assume the combination of a system failure with the occurrence of the condition, which the system was designed to protect against, in order to account for hidden failures when determining maintenance actions. Expected or allowable probabilities related to system failures are not derived through the MSG-3 process. In applying the above guidance, note that §25.1309 is a rule of general applicability, and should not be used to replace a more specific and stringent requirement. Cargo compartments, and

compartment fire detection and protection systems must meet requirements specified in §§25.855, 25.857, and 25.858, regardless of probabilities as determined in a §25.1309 related analysis.

Examples. For an example of compliance with §25.1309(c), see paragraph d(1) under §25.1441, Oxygen equipment and supply, of this AC. Another example of compliance is included under paragraph d(2), §25.855, Cargo or baggage compartments, of this AC.

Safe and Reliable. The following is extracted from an FAA memorandum dated October 26, 1990, and addresses an inquiry regarding (i) the meaning of "Safe and reliable" used in §§25.109(b) and 25.125(b)(3) in terms of AC 25.1309-1A probability, and (ii) the acceptable failure probability for deceleration devices like anti-skid and ground spoilers that have relatively large and small effects on landing distance. The FAA response follows:

Safe and reliable is generally used to mean that a failure condition is improbable. In terms of AC 25.1309-1A quantitative probability terms, improbable failure conditions are those having a probability on the order of 1×10^{-5} or less.

Each deceleration device, such as anti-skid and ground spoilers, would be expected to have a failure condition that is at least improbable (i.e. 1×10^{-5} or less) regardless of its effect on stopping distance.

8.3.4.3 Advisory Circular 25-17A: Transport Airplane Cabin Interiors Crashworthiness Handbook [101].

The comment period for proposed AC 25-17A closed on February 4, 2000.

Its predecessor, AC 25-17 [102], issued July 15, 1991, specified the following distinction:

> Airworthiness design objectives pertain to the ability of the airframe to withstand design loads, or to maintain safety of flight of the airplane relative to its operational environment. Crashworthiness design objectives pertain to safety of the occupants relative to the airplane. ***Some aspects of crashworthiness, for example, fuel tank/system design, fuselage deformation and prevention of postcrash fires, are beyond the scope of this AC.*** *(emphasis added by the authors of this report)*

The FAA ANM Project Manager for AC 25-17A advised that he anticipates no change to that applicability.

AC 25-17 contains a definition for survivable crash which seemingly oversimplifies factors involved in accidents involving transport airplanes:

> A survivable crash environment prevails when the cabin occupants are subjected to crash forces within human tolerance levels, and the structural integrity of the

> passenger space remains intact such that the occupants can rapidly evacuate the airplane.

Although suitable for rotorcraft and small airplanes in which crash forces are distributed relatively evenly across the airframe, the definition fails to account for the widely variant force distribution across the fuselage of a large transport airplane. It is not unlikely that all occupants of one section of a crashed transport airplane perish, while almost all passengers in a different section survive. The Survivability Chain mathematical model developed by RGW Cherry & Associates Ltd enables scientific evaluation of differing degrees of survivability in the same accident. [60]

8.3.4.4 FAA-Proposed Advisory Circular (AC) 25-XX Transport Airplane Propulsion Engine and Auxiliary Power Unit Installation Certification Handbook: The Propulsion Mega-AC [103].

The September 1999 draft of Proposed AC 25-XX, "The Propulsion Mega-AC" states, as its purpose, to provide:

> ...methods acceptable to the Administrator for showing compliance with the type certification requirements for transport airplane propulsion engine and auxiliary power unit (APU) installations.
>
> ...to airplane manufacturers, modifiers, foreign regulatory authorities, and...(FAA) airplane type certification engineers.
>
> The methods and procedures described therein have evolved through many years and represent current certification practice.

AC 25-XX incorporates the substance of the following Advisory Circulars relevant to the subject of this report, which would be cancelled by its issuance:

AC 25-8:	Auxiliary Fuel System Installation (May 5, 1986)
AC 25.963-1:	Fuel Tank Access Covers (July 29, 1992)
AC 25.994-1:	Design Considerations to Protect Fuel Systems during a Wheels-Up Landing (July 24, 1986)

Sections of AC 25-XX which contain guidance relevant to this report are:

Subpart E,	Section 2:	Fuel System
	Section 3:	Fuel System Components
	Section 4:	Oil System
	Section 9:	Powerplant Fire Protection
Subpart F,	Section 25.1309 Equipment, systems and installation	
Appendix 3	Fuel System Certification Checklist	

Subpart E, Section 2, encompasses the following relevant subsections, keyed to corresponding sections of Part 25 of 14 CFR:

§25.952	Fuel system analysis and test
§25.963	Fuel tanks, general
§25.965	Fuel tank tests
§25.967	Fuel tank installations
§25.973	Fuel tank filler connection
§25.975	Fuel tank vents and carburetor vapor vents

Subpart E, Section 3, encompasses the following relevant subsections, keyed to corresponding sections of Part 25 of 14 CFR:

§25.993	Fuel system lines and fittings
§25.994	Fuel system components
§25.995	Fuel valves
§25.997	Fuel strainer or filter
§25.999	Fuel system drains

Subpart E, Section 4, encompasses the following relevant subsections, keyed to corresponding sections of Part 25 of 14 CFR:

§25.1015	Oil tank tests
§25.1017	Oil lines and fittings
§25.1025	Oil valves

Subpart E, Section 9, includes the following relevant subsection, corresponding to a section of Part 25 of 14 CFR:

§25.1189	Shutoff means

Subpart F, Section 1, includes the following relevant subsection, corresponding to a section of Part 25 of 14 CFR:

§25.1309	Equipment, systems, and installations

Appendix 3: Fuel System Certification Checklist, was developed by the FAA's Small Airplane Directorate (ACE) to be used "…for safety meetings, Type Certificate (TC), Amended TC, and Supplemental Type Certificate (STC) compliance inspections; and initial or special type board meetings." It is a qualitative checklist and includes the following evaluation points relevant to this report:

§b. Vent Systems

(11) When vent lines connect engine components (carburetors, fuel injectors, etc.) to a fuel tank expansion space, a fractured vent will not pour fuel into the engine compartment fire zone on a crash landing or rollover.

§d. Hardware and Components

(9) Are flexible hoses used to account for expected differential motion or deflections…?

§f. Crashworthiness

(1) Is a crashworthiness evaluation report of fuel system planned which shows that precautions have been taken to minimize hazards due to a survivable crash environment?

(2) If aircraft upsets in pitch or rollover, is fuel system designed to prevent fuel spills from vents or lines which could cause a fire hazard?

(3) Is system crashworthy with adequate slack in lines to permit large engine shifts in survivable accidents (to 16 Gs) without severing lines or connections?

(4) Are self-sealing valves or frangible fittings used where breakaways near ignition sources are likely in survivable crash?

(5) In the event of a wheels-up landing, can fuel tanks, shutoff valve[s], drain valves, etc., fracture, and are adjacent ignition sources, such as electrical components explosion proof or hermetically sealed? Are flexible and stretchable hoses used? (AC 25.994-XX)

(6) Are fuel system components and engine mounts strong enough to be nonhazardous in a survivable crash (of 8-16 Gs) even though the current rules call for 3-4.5 Gs download?

(9) Are fuel tanks located behind spars or structure to provide for crash and ignition protection?

§i. Fuel Tanks

(7) Bladders will not normally collapse or tear due to rapid altitude changes, hard landing, blocked vents, etc., nor deflect from inadequate support or negative pressures that can lead to erroneous fuel quantity sensing or loss or fuel.

(8) Are bladders and their supports structurally applicable to prevent collapse or fracture? TSO or better?

The ANM Transport Airplane Directorate plans to develop a similar checklist tailored to the requirements of Part 25 airplanes.

The authors of Proposed AC 25-XX commendably make frequent reference to rotorcraft ACs 27-1B and 29-2B (AC 29-2C was issued subsequent to the issuance of Proposed AC 25-XX) where the content of those documents is relevant. These cross-cultural referrals can be valuable

for exposing alternative means of compliance on issues which are applicable to more than one vehicle species. The draft AC has been temporarily withheld to allow additional time for industry comment. It is available publicly at http://www.faa.gov/avr/air/ for download and comment. Click on "draft advisory circulars" on pulldown menu.

8.4 PRIOR GOVERNMENT INITIATIVES TOWARD IMPROVING CRFS AND MITIGATING POSTCRASH FIRES IN PART 25 AIRPLANES.

8.4.1 U.S. Department of Transportation Report to Congress: Systems and Techniques for Reducing the Incidence of Postcrash Fuel System Fires and Explosions [52].

The Department of Transportation's Report to Congress: Systems and Techniques for Reducing the Incidence of Post-Crash Fuel System Fires and Explosions (December 1988) was delivered to the Congress in January 1989. It responded to requirements established by the Airport and Airway Safety and Capacity Expansion Act of 1987 (PL 100-223). The Act required the DOT to conduct a study of aircraft design and equipment which minimized the incidence of postcrash fuel system fires or explosions.

The FAA study which preceded the DOT report considered 11 methods for reducing the postcrash fire and explosion hazard in transport category airplanes:

Crash-resistant fuel tanks and breakaway, self-closing fittings
Engine ignition suppression systems
Fuel tank nitrogen inerting systems
Fuel tank foam filler explosion suppression systems
Fuel tank chemical agent explosion suppression system
Anti-misting kerosene (AMK)
Fuel tank vent flame arrestor
Surge tank chemical agent explosion suppression system
Design to assure fuel tank-to-engine shutoff valve activation
Fire-resistant fuel tank access panels
Revised location of fuel tanks and engines

All but the last alternative were under active consideration at the time, and various alternatives had been studied from time to time since 1964. Early initiatives had given priority to in-flight explosion prevention over postcrash fires and their effect on survivability. (There is legitimate question whether that priority was based on experiential data.)

The FAA issued NPRM 74-16 in 1974 to require explosion prevention systems in transport airplanes. Industry responses were quick to point out that explosion prevention systems would be ineffective in reducing postcrash fire hazards in otherwise impact-survivable accidents, conditions which posed significantly greater risk to occupants than in-flight tank explosions.* Following public hearings in 1977, NPRM 74-16 was withdrawn and the FAA established the Special Aviation Fire and Explosion Reduction (SAFER) Committee to investigate methods for improving post-crash survivability.

* Risk = (Probability of Occurrence) X (Severity of the Specified Hazard).

8.4.2 Advanced Notice of Proposed Rulemaking (ANPRM) 84-17.

The SAFER Committee proposed the following regulatory changes, in order of priority:

> Amend FAR Part 25 to require fuel tank vent protection during ground fires. (Subsequently withdrawn)
>
> Amend FAR Part 25 to require design practices which maximize the probability of engine fuel supply shut off in potential fire situations. (Limited to redundant manual shut off methods)

ANPRM 84-17 was issued in the U.S. Federal Register on September 26, 1984 (49 FR 38078). Its purpose was to obtain public comments, information, and data relating to adding new airworthiness standards for transport category airplane fuel systems that would provide protection against fuel tank explosions following postcrash ground fires and assure engine and APU fuel supplies would be shut off to reduce fire hazards from spilled fuel.

8.4.3 Aviation Safety Research Act of 1988 (PL 100-591).

The Aviation Safety and Research Act of 1988 [104] was enacted during the rulemaking period for NPRM 84-17. It required the FAA Administrator to issue an ANPRM to determine the feasibility of installing crashworthy fuselage fuel tanks and fuselage fuel lines in air carrier airplanes. The FAA subsequently published ANPRM 89-11 to fulfill that requirement.

8.4.4 Advanced Notice of Proposed Rulemaking (ANPRM) 89-11.

ANPRM 89-11 was issued on May 2, 1989 [105]. It was an outgrowth of prior FAA attempts to explore methods for mitigating postcrash fires which had theretofore met with little acceptance. Responses to ANPRM 89-11 led the FAA's Northwest-Mountain Region Transport Airplane Directorate to draft NPRM 89-11A proposing the following amendments to 14 CFR Part 25:

§25.963 Fuel tanks: General [Revise paragraph (d) to read]:

> (d) Fuel tanks within the fuselage contour must be able to resist leakage and to retain fuel, under the inertia forces prescribed for the emergency landing conditions of §25.561. In addition, these tanks must be located in a protected position so that exposure to penetration or damage due to fuselage deformation, fuselage separation, displaced structural members (including the landing gear), and scraping action with the ground is unlikely.

§25.993 Fuel system lines and fittings [Revise paragraph (f) and add new paragraph (g)]

> (f) Each fuel line routed outside the fuel tank walls, and within or adjacent to the fuselage, must be designed and installed to resist leakage when the line is stretched and deformed by adjacent structure during fuselage separation. This capability must be shown with the fuel line at the environmental and operating conditions determined to be critical.

(g) Each fuel line that is routed outside the fuel tank walls must provide a means to either:

(1) shut off the supply of fuel during takeoff and landing, or

(2) have an automatic means to shut off the fuel supply during fuselage or engine separation.

§25.1189 Shutoff means. [Add new paragraph (i)]

(i) The airframe-mounted engine and auxiliary power unit (APU) fuel shutoff valves must isolate the airplane fuel supply from the engine and APU during both the normal and emergency shutdown sequence.

NPRM 89-11's issuance was overtaken by higher priorities within the FAA. The NPRM was relegated to inactive status in November 1995. The draft NPRM 89-11A incorporated many of the comments and suggestions submitted by the 24 ANPRM 89-11 commenters and is included in this report as appendix B. Unfortunately, its existence was only learned about during the final weeks of this research effort; consequently no meaningful criticisms or suggestions are offered at this time. The ANM Transport Airplane Directorate plans to issue the NPRM when priorities permit.

8.5 INDUSTRY AND MILITARY PUBLICATIONS, STANDARDS, AND SPECIFICATIONS.

Although most relevant industry and military guidance is directed specifically toward rotary-wing aircraft crashworthy fuel systems, the principles therein are universally applicable. The FAA's adoption of many industry and military crashworthiness-related standards in its guidance for transport category rotorcraft, AC 29-2 (Series), should be an exemplar for adaptation of known effective technology to transport category airplane applications.

8.5.1 MIL-STD-1290 (Series): Light Fixed- and Rotary-Wing Aircraft Crash Resistance.

The third edition (1971) of the Crash Survival Design Guide, TR-71-22 [31], formed the basis for the original (1974) version of the U.S. Army-sponsored military standard for "Light Fixed- and Rotary-Wing Aircraft Crash Resistance," Military Standard 1290 [32].

§5.5 of MIL-STD-1290: Postcrash Fire Protection, established detailed standards for:

a. Fuel containment

b. Fuel tank design criteria, including fittings and interconnections for both main and extended range tanks

(1) Fuel lines
(2) Frangible attachments
(3) Self-sealing breakaway couplings and valves

c. Separation of fuel and ignition sources
d. Separation of flammable fluids from occupiable areas
e. Barriers

§5.5.2 contains detailed design requirements for minimizing susceptibility to postcrash fires from all flammable fluids.

Appendix A, §10, includes test methods for determining qualifications of fuel system components.

Original MIL-STD-1290 (January 25, 1974) was superseded by MIL-STD-1290A on September 26, 1988, [97] which in turn was cancelled by the Department of Defense in December 1995. There is currently no superseding documented standard. Nevertheless, the criteria established by MIL-STD-1290A are acknowledged to be the current state-of-the-art of helicopter crashworthiness.

8.5.2 ADS-11 (Series): Survivability Program, Rotary Wing.

The current version, ADS-11B, was issued in May 1987, superseding ADS-11A, which was issued in April 1976. ADS-11B is currently in effect [91].

§5.3, Crashworthiness, establishes the criteria for designers to address, as a minimum, structural crashworthiness, occupant retention, injurious environment, postcrash fire potential, and evacuation.

§5.3.1 requires that contractors define their design concepts for achieving the levels of crashworthiness specified in the System Specification. It expects descriptions of features, analyses and estimates for effectiveness of each of the components and subsystems listed in Appendix I to the standard. Appropriate crashworthiness tests are specified in Aeronautical Design Standard ADS-36: "Rotary Wing Aircraft Crash Resistance."

Appendix I to ADS-11B sets out specific criteria for evaluating aircraft crash survivability. Postcrash fire potential rating areas include:

a. Spillage control

    (1) Fuel containment
    (2) Oil and hydraulic fluid containment
    (3) Flammable fluid lines
    (4) Firewall
    (5) Fuel flow interruptors

b. Ignition Control

    (1) Induction and exhaust flame location
    (2) Location of hot metals and shielding
    (3) Engine location and tiedown strength

(4) Battery location and tiedown strength
(5) Electrical wire routing
(6) Boost pump location and tiedown strength
(7) Inverter location and tiedown strength
(8) Generator location and tiedown strength
(9) Lights location and tiedown strength
(10) Antenna locations and tiedown strength

¶10.2.a. is significant in that it specifies a total systems approach to assigning evaluation ratings; e.g., "...specific shortcomings in ignition control...need not be partially or totally penalized if spillage control is substantiated...."

¶10.2.b. establishes even more stringent requirements that: "The evaluation will be conducted against the optimum crashworthiness criteria stated herein in lieu of RFP and/or System Specification requirements which may have been subject to tradeoff."

Detailed criteria for determining the Postcrash Fire Potential Ratings for the areas specified above are contained in ¶10.2.3 of ADS-11B.

8.5.3 ADS-36: Rotary Wing Aircraft Crash Resistance.

Aeronautical Design Standard (ADS) 36, Rotary Wing Aircraft Crash Resistance, was issued on 1 May 1987 and currently remains in effect [98].

§5.5 requires that aircraft systems be designed to possess specific postcrash fire protection characteristics, specified therein. Major characteristics addressed include:

a. Fuel containment

(1) fuel tanks, main
(2) fuel tanks, extended range
(3) fuel lines
(4) frangible attachments
(5) self-sealing breakaway couplings/valves

b. Separation of fuel and ignition sources
c. Separation of flammable fluids and occupiable areas
d. Shielding
e. Fuel drains
f. Fill units and access covers
g. Fuel pumps
h. Fuel filters and strainers
i. Fuel quantity indicators
j. Vents
k. Hydraulic and oil systems

(1) Hydraulic and oil lines and couplings

(2) Hydraulic and oil systems components
(3) Oil coolers

l. Electrical system

(1) Wiring
(2) Batteries and electrical components

m. Airframe and interior materials

Appendix A, §10, to ADS-36 sets forth methods for testing systems, subsystems and components, including:

a. Fuel tank crashworthiness
b. Frangible attachments (static and dynamic testing)
c. Self-sealing breakaway valves (static and dynamic tests)
d. Hose assemblies (fuel, oil and hydraulic)
e. Flammability tests for airframe and interior materials
f. Full scale whole aircraft and sectional crash tests

8.5.4 Aircraft Crash Survival Design Guide (TR-89-D-22E).

The most recent edition of the U.S. Army's Crash Survival Design Guide was issued in 1989 and contains the most up-to-date guidance for designing crashworthy fuel systems to minimize and mitigate the effects of postcrash fires in its Volume V: Aircraft Postcrash Survival [86]. Section 4 establishes basic design guidelines that will inherently resist flammable fuel spillage and ignition during survivable accidents. That objective requires that designs must integrate all potentially contributory aircraft systems by considering optimization between operational and maintenance functionality and crashworthiness. The Design Guide's priority goals assume the following order:

a. Prevent spillage; but if some does occur, design to:
b. Prevent ignition; but if some does get ignited, design to:
c. Isolate.

8.5.5 Military Specifications (MIL-SPECs).

Numerous military specifications have been developed over the years to address specific component requirements within crashworthy fuel systems. As a cost savings measure, many were cancelled without supersession by the Department of Defense during the 1990s in its attempt to minimize the number of detailed specifications visited upon contractors and to transition to performance specifications. Unfortunately, there was little evaluation of the significance of these cancelled CRFS specifications for their effect on the suitability, safety, and survivability of systems that might be procured absent detailed performance criteria. Although there is currently an effort underway to memorialize the knowledge and experience of DOD agencies and appropriate civilian standards and practices organizations (e.g., SAE and ASTM),

designers and procurers of aeronautical systems must guard that the current absence of corporate memory does not permit the loss of historical lessons so dearly learned.

- MIL-T-27422B: Tank, Fuel, Crash-Resistant, Aircraft

  Of the various military specifications relating to CRFS, the most significant is undoubtedly MIL-T-27422B [30]. Although published in February 1970 (Amended in April 1971), MIL-T-27422B remains the most current specification covering suitable design and materials for fabrication and testing of crashworthy fuel tanks. There is currently an effort by the SAE G-9 Fuel Tank Bladder Sub-Committee to reach consensus on a new fuel tank specification (MIL-PRF-27422) to be published by the U.S. Army that essentially reiterates the technical details of MIL-T-27422B in a performance specification.

Other pertinent specifications include:

- MIL-H-25579E (current version): Hose Assembly, Tetrafluoroethylene, High Temperature, Medium Pressure, General Requirements for

- MIL-V-27393/A: Valve, Safety, Fuel Cell Fitting, Crash Resistant General Specification for (Cancelled, superseded by SAE Aerospace Recommended Practice (ARP)-1616A dated April 5, 1991.)

- MIL-H-38360: Hose Assembly, Tetrafluoroethylene, High Temperature, High Pressure, Hydraulic and Pneumatic (Cancelled, superseded by SAE AS 604 and AS1339.)

- MIL-H-83796: Hose Assembly, Rubber, Lightweight, Medium Pressure, General Specification

8.5.6 MIL-STD-882D, Dated 10 Feb 2000: Standard Practice for System Safety.

This document defines: "… the system safety requirements to perform throughout the life cycle for any system, new development, upgrade, modification, resolution of deficiencies, or technology development. When properly applied, these requirements should ensure the identification and understanding of all known hazards and their associated risks; and mishap risk eliminated or reduced to acceptable levels. The objective of system safety is to achieve acceptable mishap risk through a systematic approach of hazard analysis, risk assessment, and risk management. This document delineates the minimum mandatory requirements for an acceptable system safety program for any DOD system."

The specific methodologies and applications established by MIL-STD-882D are consistent with the intent of 14 CFR §25.1309 and the guidance furnished in AC 23-1309-1C. It would be appropriate for the FAA AC guidance to cross-reference to the MIL-STD.

9. CONCLUSIONS.

The following are conclusions reached as a result of this study of Transport Airplane Crash Resistant Fuel Systems.

1. Crash-resistant fuel systems developed and utilized by the U.S. Army to safely contain fuel are highly effective in preventing postcrash fires that cause thermal injuries and death.

2. Research conducted to date indicates that the knowledge surrounding severe but survivable large transport aircraft accidents and the behavior of the aircraft structures in those accidents is not well known or understood, due primarily to the lack of crashworthiness data recorded at the accident scene.

3. Increasing the severity level of the large transport aircraft survivable accident can be accomplished by the integration of much of the U.S. Army developed CRFS technology already in existence, i.e., rupture-resistant tanks, self-sealing breakaway valves, crashworthy hoses and end fittings and protective placement of the various CRFS components within the aircraft structure.

4. CRFS knowledge and technology are not sufficient at this time to allow practical improvements in the crash resistance of current integral fuel tanks in transport airplanes.

5. The integration of CRFS technology into the large transport aircraft fleet can be accomplished more efficiently and at a lower cost and at reduced weight when more is known about airframe behavior during the more severe accidents.

6. The greatest practical reduction to the postcrash fire threat could be achieved with the development of a fuel that is hard to spill, but if spilled is extremely difficult to ignite outside the engine, but if ignited, incorporates self-extinguishing characteristics. The feasibility of the development of such a fuel is unknown.

10. RECOMMENDATIONS.

The recommendations, based on this study, outline the research efforts which should be undertaken by the FAA and NASA to support the development of improved crash-resistant fuel systems for large transport category airplanes.

The following recommendation matrix is divided into three sections: Section I – Level of Crash Protection Desired: Section II – Hazard Reduction Methods; and Section III – Information Dissemination. Each of the three sections and their subsections are further divided into three time periods: short term, mid term, and long term.

I. RECOMMENDATIONS FOR LEVEL OF CRASH PROTECTION DESIRED	YEARS				
	Short Term			Mid Term	Long Term
	1	2	3	4-10	11-
A. Specify a crash environment severity for which occupant survival is deemed economically feasible and practical today:	X				
1. As more knowledge is gained, continually reevaluate and update the severity levels based on what is practical.		X	X	X	X
B. Elevate the FAA and the NTSB accident investigators' level of expertise in the area of crash survivability, with special training related to crash kinematics, structural behavior and the behavior of the fuel, oil and electrical systems:	X	X	X		
1. Develop a crash survival investigator training syllabus and applicable accident investigation forms.	X				
2. Conduct training classes and on-the-job training using both test and nontest crashed aircraft.		X			
3. As more knowledge is gained, continually update the syllabus, investigation forms and the investigative process.			X	X	X
C. Using investigators skilled in the field of crash survivability, develop crash kinematic data for each accident to include impact velocities and stopping distances related to the vertical, longitudinal, and lateral directions, as well as typical structural deformation and displacement patterns related to serious but survivable accidents.			X	X	X
1. Develop methods to easily compile, store and retrieve crash data for future use.	X				
2. As more knowledge is gained, continually update the data and storage and retrieval methods.		X	X	X	X

I. RECOMMENDATIONS FOR LEVEL OF CRASH PROTECTION DESIRED (Continued)	YEARS				
	Short Term			Mid Term	Long Term
	1	2	3	4-10	11-
D. Develop fuel system hazard analysis methods:			X		
1. Develop and/or revise the Survivability Hazard/Postcrash Fire Potential Rating system similar to that found in Section 7.1 of the final report "A Study of Transport Airplane Crash Resistant Fuel Systems," Robertson Aviation, L.L.C. Report No. RA-FAA-01-131.			X		
2. Develop and/or revise the Fuel System Fire Hazard Level Reduction Rating system similar to that found in Section 7.2 of the final report "A Study of Transport Airplane Crash Resistant Fuel Systems," Robertson Aviation, L.L.C. Report No. RA-FAA-01-131.			X		
3. As more knowledge is gained, continually update the fuel system hazard analysis methods.				X	X
E. Crash test large transport aircraft and/or portions of their structure to obtain baseline data:	X	X	X	X	X
1. Conduct full-scale crash tests under "crash scenario" conditions to establish crash loads and displacements throughout the airframe and fuel system.	X	X	X	X	X
2. Use data derived from the testing proposed above to design aircraft section tests incorporating fuel system components under varying impact conditions incorporating simultaneous horizontal and vertical loading.		X	X	X	X
3. Incorporate instrumented anthropomorphic dummies during testing to ascertain loads transmitted to passengers across the fuselage crash load spectra.	X	X	X	X	X
4. As more knowledge is gained, continually update the baseline data.		X	X	X	X

II. RECOMMENDATIONS FOR HAZARD REDUCTION METHODS	YEARS				
	Short Term			Mid Term	Long Term
	1	2	3	4-10	11-
1. Broaden research into materials which can be used to improve integral fuel tank properties for crash resistance, fatigue life, ultimate strength, ductility, weight, and cost.		X	X	X	
2. Initiate research and development in cooperation with tank manufacturers to develop and test improved crash-resistant fuel tanks suitable for transport airplanes.		X	X		
3. Initiate research and development in cooperation with valve manufacturers to develop and test self-sealing breakaway valves suitable for transport airplanes.		X	X		
4. Develop and test self-sealing breakaway valves for fuel, vent and hydraulic line locations where pylon and/or engine separation would be expected to occur.		X	X		
5. Develop and test crash resistant bladders or similar type concepts suitable for transport airplane fuel tanks.		X	X		
6. Develop and test frangible fastening methods to include bolts, clips, clamps, and other structural techniques suitable for use in transport airplanes.		X	X		
7. Develop lightweight crash-resistant fuel lines and end fittings suitable for use in transport airplanes.		X	X		
8. As more knowledge is gained, continually update the CRFS component designs and technology.			X	X	X
B. Conduct aircraft section tests to improve analytical techniques for determining whether landing gear and engines will separate without damaging wing or center fuel tank integrity.		X			
1. Conduct similar tests with newly designed aircraft.				X	X

II. RECOMMENDATIONS FOR HAZARD REDUCTION METHODS (Continued)	YEARS				
	Short Term			Mid Term	Long Term
	1	2	3	4-10	11-
C. Conduct crash tests of large transport aircraft and/or portions of their structure containing various CRFS components and overall CRFS system concepts to determine level of protection provided.				X	X
1. Conduct similar testing with new aircraft and new CRFS designs.				X	X
D. Reinstitute research on the development of a fuel that is hard to spill, but if spilled is extremely difficult to ignite outside the engine, but if ignited would incorporate self-extinguishing characteristics.	X	X	X	X	X

III. RECOMMENDATIONS FOR INFORMATION DISSEMINATION	YEARS				
	Short Term			Mid Term	Long Term
	1	2	3	4-10	11-
A. Develop a method of storing, retrieving and readily disseminating to the aerospace community the usable knowledge gained during programs I and II.		X			
B. Prepare design guides, advisory circulars, etc. to present useful results of the various research and testing programs to: Aircraft designers FAA rule makers FAA certification personnel Aerospace community overall			X	X	X
C. As more knowledge is gained, continually update the storage and retrieval system, and the various aids used to disseminate the information to the aerospace community.		X	X	X	X

11. REFERENCES.

1. Hansberry, H.L., "Aircraft Fire Protection Developments by the Federal Aviation Administration (1940 - 1970)." ASME Publication 70-GT-109, The American Society of Mechanical Engineers, New York, New York, 1970.

2. Cleveland Laboratory Aircraft Fire Research Panel, "Preliminary Survey of the Aircraft Fire Problem," NACA Research Memorandum No. E8B18, Flight Propulsion Laboratory, Cleveland, Ohio, May 1948.

3. Sommers, John, Jr. and John H. Clark, "The Development of Aircraft Crash-Resistant Fuel Cells, Safety Valves, and Breakaway Accessories," SAE Paper 517D, *Society of Automotive Engineers*, New York, New York, April 1962.

4. "United States Army Aviation Crash Injury Research," TREC Technical Report 62-13, Aviation Crash Injury Research, Phoenix, Arizona, September 1961.

5. Spencer, Lloyd E., "Breakaway Fuel Cell Concept," TREC Technical Report 62-37, Aviation Crash Injury Research, Phoenix, Arizona, May 1962.

6. Pinkel, I. Irving, G. Merritt Preston and Gerard J. Pesman, "Mechanism of Start and Development of Aircraft Crash Fires," NACA Report 1133, Lewis Flight Propulsion Laboratory, Cleveland, Ohio, 1953.

7. Pinkel, I. Irving, Solomon Weiss, G. Merritt Preston, and Gerard J. Pesman, "Origin and Prevention of Crash Fires in Turbojet Aircraft," NACA Report 1363, Lewis Flight Propulsion Laboratory, Cleveland, Ohio, 1958.

8. Field, R.L., Melvin F. Miller, and George L. Pigman, "An Investigation of the Crash Fire Problems in Transport Aircraft Fuel Tanks," CAA Technical Development Report No. 134, Technical Development and Evaluation Center, Indianapolis, Indiana, January 1951.

9. Reed, W.H., S.H. Robertson, L.W.T. Weinberg, and L.H. Tyndall, "Full-Scale Dynamic Crash Test of a Douglas DC-7 Aircraft," FAA Technical Report ADS-37, Aviation Safety Engineering and Research, Phoenix, Arizona, April 1965.

10. Reed, W.H., S.H. Robertson, L.W.T. Weinberg, and L.H. Tyndall, "Full-Scale Dynamic Crash Test of a Lockheed Constellation Model 1649 Aircraft," Technical Report No. FAA-ADS-38, Aviation Safety Engineering and Research, Phoenix, Arizona, October 1965.

11. Bennett, Charles V. and Robert R. Rodgers, Jr., "Development of Crash-Resistant Aircraft Flammable Fluid Systems, Part I, Delineation of the Problem," Technical Development Report No. 397, FAA Technical Development Center, Indianapolis, Indiana, March 1959.

12. Turnbow, J.W., "A Dynamic Crash Test of an H-25 Helicopter," SAE Paper 517A, *Society of Automotive Engineers*, New York, New York, April 1962.

13. Haley, J.L., Jr., S.H. Robertson, and J.W. Turnbow, "Crash Survival Evaluation OH-4A Helicopter," Memorandum Report No. M-65-9, *Aviation Safety Engineering and Research*, Phoenix, Arizona, June 1965.

14. "Crash Survival Evaluation OH-5A Helicopter," AvSER Memorandum Report M66-11, Aviation Safety Engineering and Research, Phoenix, Arizona, April 1966.

15. Pesman, Gerard J., "Appraisal of Hazards to Human Survival in Airplane Crash Fires," NACA Technical Note 2996, Lewis Flight Propulsion Laboratory, Cleveland, Ohio, September 1953.

16. Johnson, Neva B., Donald E. Goebel, and S. Harry Robertson, "An Appraisal of the Postcrash Fire Environment," Technical Report 70-22-CE, U.S. Army Natick Laboratories, Natick, Massachusetts, September 1969.

17. Sarkos, Constantine P. and Richard G. Hill, "Characteristics of Transport Aircraft Fires Measured by Full-Scale Tests," *Aircraft Fire Safety, AGARD Conference Proceedings No. 467*, Specialised Printing Services Limited, Laughton, England, October 1989.

18. Webster, Harry, "Fuel Fire Penetration Test and Destruction of a Transport Aircraft," Report No. DOT/FAA/AR-96/48, William J. Hughes Technical Center, Atlantic City International Airport, New Jersey, December 1996.

19. National Research Council, National Materials Advisory Board, "Fire and Smoke-Resistant Interior Materials for Commercial Transport Aircraft," Publication NMAB-477-1, National Academy Press, Washington, D.C., 1995.

20. Bennett, Charles V. and Robert J. Schroers, "Impact Tests of Flexible Nonmetallic Aircraft Fuel Tanks Installed in Two Categories of Simulated Wing Structures," CAA Technical Development Report No. 291, Technical Development Center, Indianapolis, Indiana, January 1957.

21. Hillman, D.A. and R.J. Schroers, "Calculation of the Strength of Crash-Resistant Fuel Cells for the Wings of a Twin-Engine and a Four-Engine Transport Airplane," Final Report Task No. 59-203.4, National Aviation Facilities Experimental Center, Atlantic City, New Jersey, April 1961.

22. Clark, John H., "Development of Crash-Resistant Aircraft Flammable Fluid Systems, Part IIA, Specifications for Prototype Fittings for Bladder-Type Fuel Tanks," Interim Report Task No. 59-203.8, FAA Test and Experimentation Division, Atlantic City, New Jersey, May 1960.

23. North, David E., "Criteria for the Design and Installation of Crash-Resistant Fuselage Fuel Cells," WADC Technical Note 58-236, Wright Air Development Center, Wright-Patterson U.S. Air Force Base, Ohio, June 1958.

24. Robertson, S. Harry and James W. Turnbow, "Aircraft Fuel Tank Design Criteria," USAAVLABS Technical Report 66-24, U.S. Army Aviation Materiel Laboratories, Fort Eustis, Virginia, March 1966.

25. Robertson, S. Harry and Victor E. Rothe, "Experimental Crash-Resistant Fuel Tank Program," AvSER Report No. 65-23, Aviation Safety Engineering and Research, Phoenix, Arizona, December 1965.

26. Johnson, N.B., J.H. Rogers, and R.L. Cook, "Aircraft Fuel Systems Design Study," USAAVLABS Technical Report 67-33, U.S. Army Aviation Materiel Laboratories, Fort Eustis, Virginia, 1967.

27. Robertson, S. Harry, "Development of a Crash-Resistant Flammable Fluids System for the UH-1A Helicopter," USAAVLABS Technical Report 68-82, U.S. Army Aviation Materiel Laboratories, Fort Eustis, Virginia, January 1969.

28. Turnbow, J.W., D.F. Carroll, J.L. Haley, Jr., and S.H. Robertson, "Crash Survival Design Guide," USAAVLABS Technical Report 67-22, U.S. Army Aviation Materiel Laboratories, Fort Eustis, Virginia, July 1967.

29. Turnbow, J.W., D.F. Carroll, J.L. Haley, Jr., and S.H. Robertson, "Crash Survival Design Guide," USAAVLABS Technical Report 70-22, U.S. Army Aviation Materiel Laboratories, Fort Eustis, Virginia, August 1969.

30. "Military Specification MIL-T-27422B, Tank, Fuel, Crash-Resistant, Aircraft," Department of Defense, Washington, D. C., February 1970.

31. "Crash Survival Design Guide," U.S. Army Air Mobility Research and Development Laboratory, Fort Eustis, Virginia, October 1971.

32. Military Standard MIL-STD-1290, "Light Fixed- and Rotary-Wing Aircraft Crashworthiness," Department of Defense, Washington, D. C., January 1974.

33. Robertson, S. Harry, "The UH-1D/H Crash-Resistant Fuel System Development Program," *Dynamic Science*, Phoenix, Arizona, December 1969.

34. Cook, Richard L. and Donald E. Goebel, "Evaluation of the UH-1D/H Helicopter Crashworthy Fuel System in a Crash Environment," USAAMRDL Technical Report 71-47, U.S. Army Air Mobility Research and Development Laboratory, Fort Eustis, Virginia, November 1971.

35. Gabella, William F. and Wade L. Young, "Summary of U.S. Army Crashworthy Fuel Systems Accident Experience, 1970-1973," *System Safety Newsletter*, Vol. 2, No. 3, U.S. Army Agency for Aviation Safety, Fort Rucker, Alabama, 1973.

36. Knapp, Stanley C., Pierre Allemond, and David H. Karney, "Helicopter Crashworthy Fuel Systems and Their Effectiveness in Preventing Thermal Injury," *AGARD*

Conference Proceedings No. 225, Technical Editing and Reproduction Ltd., Harford House, London, England, December 1978.

37. Robertson, S. Harry and Ted J. Adamczyk, "Crashworthy Fuel Systems," *Aircraft Crashworthiness*, University Press of Virginia, Charlottesville Virginia, 1975.

38. Garrison, James R. and Herman H. Waldrup, "The Bell Model 222," SAE Paper 770951, Society of Automotive Engineers, Warrendale, Pennsylvania, November 1977.

39. Fox, Roy G., "Realistic Civil Helicopter Crash Safety," *Crashworthy Design of Rotorcraft*, Georgia Institute of Technology, Atlanta, Georgia, April 1986.

40. Coltman, Joseph W., "Rotorcraft Crashworthy Airframe and Fuel System Technology Development Program," Report No. DOT/FAA/CT-91/7, FAA Technical Center, Atlantic City International Airport, New Jersey, October 1994.

41. Buckson, W., W. Schlegel and I.R. Smith, "Design, Development, and Evaluation of a Crash-Resistant Fuel System Installation," Technical Report No. FAA-ADS-27, All American Engineering Company, Wilmington, Delaware, December 1965.

42. Scheuerman, Hugo P., "Crash-Resistant Fuel Systems Demonstrations and Evaluation," Report No. FAA-RD-71-27, National Aviation Facilities Experimental Center, Atlantic City, New Jersey, August 1971.

43. Nissley, P.M. and T.L. Heid, "Structural Design for Fuel Containment Under Survivable Crash Conditions," Technical Report FAA-ADS-19, General Dynamics/Convair, San Diego, California, August 1964.

44. Ahlers, Robert H., "Investigation of Two Methods for Improving the Crashworthiness of Integral Fuel Tanks," Report No. FAA-RD-70-56, National Aviation Facilities Experimental Center, Atlantic City, New Jersey, November 1970.

45. Hackler, Larry W., "Wing Leading-Edge fuel Tank Impact Tests," Report No. FAA-RD-72-83, National Aviation Facilities Experimental Center, Atlantic City, New Jersey, October 1972.

46. Yancey, Merritt M. and Richard T. Headrick, "An Engineering Investigation and Analysis of Crash-Fire Resistant Fuel Tanks," Report No. NA-69-43, Firestone Coated Fabrics Company, Akron, Ohio, July 1970.

47. Robinson, K.D., "An Investigation of Methods to Control Postcrash Fuel Spill From Integral Fuel Tanks," Report No. FAA-RD-71-75, Goodyear Tire and Rubber Company, Akron, Ohio, December 1971.

48. Carden, Huey D., "Correlation and Assessment of Structural Airplane Crash Data With Flight Parameters at Impact," NASA Technical Paper 2083, Langley Research Center, Hampton, Virginia, November 1982.

49. Thomson, Robert G., Huey D. Carden, and Robert J. Hayduk, "Survey of NASA Research on Crash Dynamics," NASA Technical Paper 2298, Langley Research Center, Hampton, Virginia, April 1984.

50. Perrella, William M., Jr., "Tests of Crash-Resistant Fuel System for General Aviation Aircraft," Report No. FAA-RD-78-28, National Aviation Facilities Experimental Center, Atlantic City, New Jersey, March 1978.

51. Edwards, W. Thomas and William M. Perrella, Jr., "Crash-Resistant Fuel Systems for General Aviation Aircraft," SAE Paper 790592, *Society of Automotive Engineers*, Warrendale, Pennsylvania, April 1979.

52. "Systems and Techniques for Reducing the Incidence of Postcrash Fuel System Fires and Explosions," Report to Congress, FAA-P-8110.3, U.S. Department of Transportation, Washington, D. C., December 1988.

53. Enders, J.H. and E.C. Wood, "Special Aviation Fire and Explosion Reduction (SAFER) Advisory Committee Final Report, Volumes I, IIA and IIB," Report No. FAA-ASF-80-4, Office of Aviation Safety, Washington, D. C., June 1980.

54. Thompson, R.G. and C. Caiafa, "Structural Response of Transport Airplanes in Crash Situations," Report No. DOT/FAA/CT-83/42, FAA Technical Center, Atlantic City International Airport, New Jersey, November 1983.

55. Wittlin, Gil, "Fuel Containment Concepts - Transport Category Airplanes," Report No. DOT/FAA/CT-87/18, FAA Technical Center, Atlantic City International Airport, New Jersey, November 1987.

56. Wittlin, Gil, "Investigation of Transport Airplane Fuselage Fuel Tank Installations Under Crash Conditions," Report No. DOT/FAA/CT-88/24, FAA Technical Center, Atlantic City International Airport, New Jersey, California, July 1989.

57. Shaw, Maurice L., "Safety Evaluation of Emulsified Fuels," USAAMRDL Technical Report 71-29, Eustis Directorate, U.S. Army Air Mobility Research and Development Laboratory, Fort Eustis, Virginia, June 1971.

58. Yaffee, Michael L., "Antimisting Fuel Research and Development for Commercial Aircraft–Final Summary Report," Report No. DOT/FAA/CT-86/7, FAA Technical Center, Atlantic City International Airport, New Jersey, April 1986.

59. Collins, Harry and Trevor Pinch, *The Golem at Large: What You Should Know About Technology*, Cambridge University Press, 1998, ISBN 0-521-55141-2.

60. Cherry, Ray, Kevin Warren, and Aaron Chan, "A Benefit Analysis for Aircraft 16-g Dynamic Seats," Report No. DOT/FAA/AR-00/13, FAA William J. Hughes Technical Center, Atlantic City International Airport, New Jersey, April 2000.

61. Williams, M. Susan and Robert J. Hayduk, "Vertical Drop Test of a Transport Fuselage Section Located Forward of the Wing," NASA Technical Memorandum 85679, Langley Research Center, Hampton, Virginia, August 1983.

62. Williams, M. Susan and Robert J. Hayduk, "Vertical Drop Test of a Transport Fuselage Center Section Including the Wheel Wells," NASA Technical Memorandum 85706, Langley Research Center, Hampton, Virginia, October 1983.

63. Pugliese, Saverio M., "707 Fuselage Drop Test Report," Report No. 7252-1, Calspan Corporation, Buffalo, New York, March 1984.

64. Wittlin, Gil and Bill LaBarge, "KRASH Dynamics Analysis Modeling–Transport Airplane Controlled Impact Demonstration Test," Report No. DOT/FAA/CT-85/9, FAA Technical Center, Atlantic City International Airport, New Jersey, May 1985.

65. Johnson, Richard and Barry Wade, "Longitudinal Impact Test of a Transport Airframe Section," Report No. DOT/FAA/CT-87/26, FAA Technical Center, Atlantic City International Airport, New Jersey, July 1988.

66. McGuire, Robert J., William J. Nissley, and James E. Newcomb, "Vertical Drop Test of a Metro III Aircraft," Report No. DOT/FAA/CT-93/1, FAA Technical Center, Atlantic City International Airport, New Jersey, June 1993.

67. McGuire, Robert J. and Tong Vu, "Beechcraft 1900C Vertical Impact Test," Report No. DOT/FAA/AR-TN99/25, FAA William J. Hughes Technical Center, Atlantic City International Airport, New Jersey, May 1999.

68. Logue, Thomas V., Robert J. McGuire, John W. Reinhardt, and Tong V. Vu, "Vertical Drop Test of a Narrow Body Fuselage Section With Overhead Stowage Bins and Auxiliary Fuel Tank System Onboard," Report No. DOT/FAA/CT-94/116, FAA Technical Center, Atlantic City International Airport, New Jersey, April 1995.

69. McGuire, Robert and Tim Macy, "Longitudinal Acceleration Tests of Overhead Luggage Bins and Auxiliary Fuel Tank in a Transport Airplane Airframe Section," Report No. DOT/FAA/AR-99/4, FAA William J. Hughes Technical Center, Atlantic City International Airport, New Jersey, June 1999.

70. Abramowitz, Allan, Philip A. Ingraham, and Robert McGuire, "Vertical Drop Test of a Shorts 3-30 Airplane," DOT/FAA/AR-99/87, FAA William J. Hughes Technical Center, Atlantic City International Airport, New Jersey, November 1999.

71. Abramowitz, Allan, Timothy G. Smith, and Dr. Tong Vu, "Vertical Drop Test of a Narrow-Body Transport Fuselage Section With a Conformable Auxiliary Fuel Tank Onboard," Report No. DOT/FAA/AR-00/56, FAA William J. Hughes Technical Center, Atlantic City International Airport, New Jersey, September 2000.

72. "Bibliography of Unclassified Aircraft Fire Literature," NACA RM E9H03, November 10, 1949.

73. Schroers, Robert J., "Some Developments for Greater Crash Safety in Aircraft," *SAE Quarterly Transactions*, Vol. 6 No. 2, Society of Automotive Engineers, New York, New York, April 1952.

74. Civil Aeronautics Board, "A Study of United States Air Carrier Accidents Involving Fire 1955-1964," *Bureau of Safety Pamphlet 7-6-3*, Civil Aeronautics Board, Washington, D.C., March 1966.

75. Lucha, G.M., M.A. Robertson, and F.A. Schooley, "An Analysis of Aircraft Accidents Involving Fires," NASA Report NASA-CR-137690, Ames Research Center, Moffett Field, California, May 1975.

76. Horeff, Thomas G., "A Crashworthiness Analysis With Emphasis on the Fire Hazard: U.S. and Selected Foreign Turbine Aircraft Accidents 1964-1974," Report No. FAA-RD-75-156, Federal Aviation Administration, Washington, D.C., July 1976.

77. "U.S. Air Carrier Accidents Involving Fire, 1965 Through 1974 and Factors Affecting the Statistics," NTSB Special Study, NTSB-AAS-77-1, National Transportation Safety Board, Washington, D.C., February 1977.

78. "General Aviation Accidents: Postcrash Fires and How to Prevent or Control Them," NTSB Special Study AAS-80-2, National Transportation Safety Board, August 1980.

79. Widmayer, E. and Otto B. Brende, "Commercial Jet Transport Crashworthiness," Report No. DOT/FAA/CT-82/86, FAA Technical Center, Atlantic City International Airport, New Jersey, April 1982.

80. Taylor, A.F., "Fire, Fuel and Survival: A Study of Transport Aircraft Accidents, 1955-1974," *AGARD Conference Proceedings 199*, 1975.

81. Taylor, A.F., "A Study of Survivable Aircraft Accidents Involving Postimpact Fire," College of Aeronautics Memo 7602, Cranfield Institute of Technology, Cranfield, Bedford, England, January 1976.

82. Taylor, A.F., "Aircraft Fires – A Study of Transport Accidents From 1975 to the Present," *AGARD Conference Proceedings 467*, Specialised Printing Services Limited, Loughton, Essex, England, October 1989.

83. Taylor, A.F., "A Review of Fire Related Accidents, 1985 – 1995," *AGARD Conference Proceedings 587*, Canada Communication Group Inc., Hull (Quebec), Canada, September 1997.

84. Weitz, P.G., "Commercial Aircraft Airframe Fuel Systems Survey and Analysis," Report No. DOT/FAA/CT-82/80, FAA Technical Center, Atlantic City International Airport, New Jersey, July 1982.

85. "Aircraft Crash Survival Design Guide, Volume II - Aircraft Design Crash Impact Conditions and Human Tolerance," Report No. USAAVSCOM TR89-D-22B, U.S. Army

Aviation Research and Technology Activity (AVSCOM), Fort Eustis, Virginia, December 1989.

86. Johnson, N.B., S.H. Robertson, and D.S. Hall, "Aircraft Crash Survival Design Guide, Volume V—Aircraft Postcrash Survival," Report No. USAAVSCOM TR 89-D-22E, U.S. Army Aviation Research and Technology Activity (AVSCOM), Fort Eustis, Virginia, December 1989.

87. Robertson, S. Harry, "Experimental Crash-Resistant Fuel Tank Program," AvSER Report 65-23, Aviation Safety Engineering and Research, Phoenix, Arizona, December 1965.

88. Robertson, S. Harry, "Proposed Military Specification MIL-T-27422B, Tank, Fuel, Crash-Resistant, Aircraft," AvSER M-69-3, Dynamic Science (the AvSER Facility), Phoenix, Arizona, April 1969.

89. Robertson, S.H. and P. Macaraeg, "A Program to Reduce the Postcrash Fire Potential of the Cessna 185 and 206 Aircraft," Robertson Aviation, Inc., Tempe, Arizona, May 1985.

90. "Aircraft Fuel System Safety Program Report," Prepared by the International Aviation Industry, August 4, 2000.

91. Aeronautical Design Standard (ADS) 11B, "Survivability Program Rotary Wing," U.S. Army Aviation Systems Command, Directorate for Engineering, St. Louis, Missouri, May 1987. (Superseding ADS-11A, April 1976.)

92. Robertson, S. Harry and James W. Turnbow, "A Method for Selecting a Crashworthy Fuel System Design," *AGARD Conference Proceedings No. 255*, Technical Editing and Reproduction Ltd., Harford House, London, England, December 1978.

93. "Revised Structural Loads Requirements for Transport Category Airplanes," FAA Amendment 25-91, Federal Register, 62 FR 40702, July 29, 1997.

94. Advisory Circular (AC) 25-994-1: "Design Considerations to Protect Fuel Systems During a Wheels Up Landing," Federal Aviation Administration, Washington, D.C., July 24, 1986.

95. Advisory Circular (AC) 25-963.1: "Fuel Tank Access Covers," Federal Aviation Administration, Washington, D.C., July 29, 1992.

96. Advisory Circular (AC) 25-8: "Auxiliary Fuel System Installations," Federal Aviation Administration, Washington, D.C., May 2, 1986.

97. Military Standard MIL-STD-1290A (AV), "Light Fixed- and Rotary-Wing Aircraft Crashworthiness," Department of Defense, Washington, D. C., September 1988.

98. Aeronautical Design Standard (ADS) 36, "Rotary-Wing Aircraft Crash Resistance," U.S. Army Aviation Systems Command, Directorate for Engineering, St. Louis, Missouri, May 1987.

99. Advisory Circular (AC) 25-22: "Certification of Transport Airplane Mechanical Systems," Federal Aviation Administration, Washington, D.C., March 14, 2000.

100. Advisory Circular (AC) 25-21: "Certification of Transport Airplane Structure," Federal Aviation Administration, Washington, D.C., September 1, 1999.

101. Draft Advisory Circular (AC) 25-17A: "Transport Airplane Cabin Interiors Crashworthiness Handbook," Federal Aviation Administration, Washington, D.C. November 25, 1991

102. Advisory Circular (AC) 25-17: "Transport Airplane Cabin Interiors Crashworthiness Handbook," Federal Aviation Administration, Washington, D.C., July 15, 1991.

103. Draft Advisory Circular (AC) 25-XX: "Transport Airplane Propulsion Engine and Auxiliary Power Unit Installation Certification Handbook: ("The Propulsion Mega-AC")," Federal Aviation Administration, Washington, D.C., September 1999.

104. Aviation Safety and Research Act of 1988 (Public Law 100-591).

105. "Installation of Crashworthy Fuselage Fuel Tanks and Fuel Lines," FAA Advance Notice of Proposed Rulemaking (ANPRM 89-11), Federal Register, 54 FR 18824, May 2, 1989.

12. BIBLIOGRAPHY.

"707 Fuselage Drop Test Report," Saverio M. Pugliese, Report No. 7252-1, Calspan Corporation, Buffalo, New York, March 1984.

"A Benefit Analysis for Aircraft 16-G Dynamic Seats," Report No. DOT/FAA/AR-00/13 Report, FAA William J. Hughes Technical Center, Atlantic City International Airport, New Jersey, April 2000.

"A Comparison of Army Rotary and Fixed Wing Fire Accident Experience," Report No. HF 5-61, U.S. Army Board for Aviation Accident Research, Fort Rucker, Alabama, September 1961.

"A Crashworthiness Analysis With Emphasis on the Fire Hazards: U.S. and Selected Foreign Turbine Aircraft Accidents 1964-1974," Final Report, Thomas G. Horeff, FAA-RD-75-156, Federal Aviation Administration, July 1976, ADA029162.

"A Dynamic Crash Test of an H-25 Helicopter," James W. Turnbow, SAE Paper 517A, Society of Automotive Engineers, New York, New York, April, 1962.

"A Method for Selecting a Crashworthy Fuel System Design," S.H. Robertson and J.W. Turnbow, *AGARD Conference Proceedings-255*, North Atlantic Treaty Organization, 1978.

"A New Look at Fuel System Design Criteria," S. Harry Robertson, SAE Paper 660794, Society of Automotive Engineers, 1966.

"A Program to Reduce the Postcrash Fire Potential of the Cessna 185 and 206 Aircraft," S.H. Robertson and P. Macaraeg, Robertson Aviation, Inc., Tempe, Arizona, May 1985.

"A Review of Fire Related Accidents," 1985-1995, Frank A. Taylor, AGARD-Conference Proceedings-587, North Atlantic Treaty Organization, 1997.

"A Study of Aircraft Post-Crash Fuel Fire Mitigation," D.W. Naegeli, et al., Interim Report BFLRF No. 292, Southwest Research Institute, San Antonio, Texas, June 1994.

"A Study of Survivable Aircraft Accidents Involving Post-Impact Fire," A.F. Taylor, College of Aeronautics Memo 7602, Cranfield Institute of Technology, Cranfield, Bedford, England.

"A Study of the Fuel/Air Vapor Characteristics in the Ullage of Aircraft Fuel Tanks," C.M. Pedriani, USSAVLABS Technical Note 3, U.S. Army Aviation Materiel Laboratories, Fort Eustis, Virginia, June 1970.

"A Study of the Inhalation Toxicity of Smoke Produced Upon Pyrolysis and Combustion of Polyethylene Foams," R.L. Kuhn, W.J. Potts and T.E. Waterman, *Fire Retardants: Proceedings of 1978 Conference on Flammability and Fire Retardants*, Technomic Publishing Co., Westport, Connecticut, 1978.

"A Study of United States Air Carrier Accidents Involving Fire 1955-1964," Bureau of Safety Pamphlet, BOSP 7-6-3, Civil Aeronautics Board, Washington, D.C., March 1966.

"A Summary of Crash Fire and Injury Rates in Helicopter Accidents," Charles V. Bennett and James V. Burkhard, Technical Development Report No. 313, FAA Technical Development Center, Indianapolis, Indiana, June 1957.

"Accelerations in Transport-Airplane Crashes," G. Merritt Preston and Gerard J. Pesman, NACA, Washington, February 1958.

"Advanced Flame Arrestor Materials and Techniques for Fuel Tank Protection," Q.C. Malmberg and E.W. Wiggins, McDonnell Douglas Corp., Technical Report 72-12, U.S. Air Force Aero Propulsion Laboratory, Wright-Patterson U.S. Air Force Base, Ohio, March 1972, AD 743016.

"Aeronautical Design Standard (ADS) 11B, Survivability Program Rotary Wing," U.S. Army Aviation Systems Command, Directorate for Engineering, St. Louis, Missouri, May 1987, (superseding ADS-11A, April 1976).

"Aeronautical Design Standard (ADS) 36, Rotary Wing Aircraft Crash Resistance," U.S. Army Aviation Systems, Command, Directorate for Engineering, St. Louis, Missouri, May 1987.

Air System (Draft), Joint Service Specification Guide (JSSG) 2000, Joint Aeronautical Commanders' Group (JACG), Aviation Engineering Board (AEB), Wright-Patterson AFB, Ohio, Release 1 – November 1998.

"Aircraft Accident Report, In-Flight Fire/Emergency Landing," National Transportation Safety Board, NTSB/AAR-98/03, Washington, D.C., September 1996.

"Aircraft Accident Report, Uncontained Engine Failure," National Transportation Safety Board, NTSB/AAR-98/01, Washington, D.C., July 1996.

"Aircraft Crash Survival Design Guide, Volume II, Aircraft Design Crash Impact Conditions and Human Tolerance," Report No. USAAVSCOM TR89-D-22B, U.S. Army Aviation Research and Technology Activity (AVSCOM), Fort Eustis, Virginia, December, 1989.

"Aircraft Crash Survival Design Guide, Volume V—Aircraft Postcrash Survival," Final Report, USARTL-TR-79-22, U.S. Army Aviation Research and Technology Activity (AVSCOM), Fort Eustis, Virginia, January 1980.

"Aircraft Crash Survival Design Guide, Volume V—Aircraft Postcrash Survival," N.B. Johnson, S.H. Robertson, and D.S. Hall, Report No. USAAVSCOM TR 89-D-22E, U.S. Army Aviation Research and Technology Activity (AVSCOM), Fort Eustis, Virginia, December 1989.

"Aircraft Crashworthiness," K. Saczalski, et al., eds., University Press of Virginia, Charlottesville, Virginia, 1975.

"Aircraft Crashworthiness," R.F. Chandler, (ed.), PT-50, Society of Automotive Engineers, Warrendale, Pennsylvania, 1995.

"Aircraft Crashworthiness: History, Requirements, and Goals," Major Warren D. Tuttle, USAF, BSC, The Advanced Medium STOL Transport System Program Office, Wright-Patterson AFB, Ohio, January 1976.

"Aircraft Evacuation Testing: Research and Technology Issues," U.S. Office of Technology Assessment, PB94-107 620, Washington, D.C., September 1993.

"Aircraft Fire Protection Developments by the Federal Aviation Administration (1940-1970)," H. L. Hansberry, Federal Aviation Administration, Atlantic City, New Jersey, 1970.

"Aircraft Fire Safety," *AGARD-Conference Proceedings-467*, Advisory Group for Aerospace Research and Development, North Atlantic Treaty Organization, February 1990, AD-A217 575.

"Aircraft Fire Safety," *AGARD-Conference Proceedings-587*, Advisory Group for Aerospace Research and Development, North Atlantic Treaty Organization, October 1996, AD-A330134.

"Aircraft Fire Safety," *AGARD-LS-123*, Advisory Group for Aerospace Research and Development, North Atlantic Treaty Organization, May 1982, AD-A116 380.

"Aircraft Fire Safety," Major J.B. Catiller, USAF, ed., AGARD, *AGARD-Conference Proceedings-166*, Advisory Group for Aerospace Research and Development, North Atlantic Treaty Organization, October 1975, AD-A018180.

"Aircraft Fires—A Study of Transport Accidents From 1975 to the Present," AGARD, *AGARD-Conference Proceedings-467*, Advisory Group for Aerospace Research and Development, North Atlantic Treaty Organization, 1989.

"Aircraft Fires, Smoke Toxicity, and Survival: An Overview," A.K. Chaturvedi and D.C. Sanders, DOT/FAA/AM-95/8, Civil Aeromedical Institute, Federal Aviation Administration, Oklahoma City, Oklahoma, February 1995.

"Aircraft Flexible Tanks, General Design and Installation Recommendations," Aerospace Recommended Practice (ARP) 1664, Society of Automotive Engineers, Warrendale, Pennsylvania.

"Aircraft Fuel System Safety Program Report," International Aviation Industry, August 4, 2000.

"Aircraft Fuel Systems Design Study," N.B. Johnson, J.H. Rogers, and R.L. Cook, USAAVLABS Technical Report 67-33, U.S. Army Aviation Materiel Laboratories, Fort Eustis, Virginia, 1967.

"Aircraft Fuel Tank Design Criteria," S. Harry Robertson and James W. Turnbow, USAAVLABS Technical Report 66-24, U.S. Army Aviation Materiel Laboratories, Fort Eustis, Virginia, March 1966.

"Aircraft Kerosene Versus Wide-Cut Fuel-Safety Considerations," H.W. Carhart, I.I. Pinkel, and J.H. Warren, paper presented at Air Transportation meeting at New York City, Society of Automotive Engineers, New York, May 1976.

"Aircraft Mishap Fire Pattern Investigations," J.M. Kuchta and R.G. Clodfelter, Report No. AFWAL-TR-85-2057, AF Wright Aeronautical Laboratories, Wright-Patterson AFB, Ohio, August 1985.

"Aircraft Postcrash Fire Reduction/Survivability Enhancement From a Manufacturer's Viewpoint," T. Madgwick, AGARD, *AGARD-LS-123*, North Atlantic Treaty Organization, 1982.

"Airport and Airway Safety and Capacity Expansion Act of 1987," (Public Law 100-233).

"Airworthiness Requirements: Accidents Investigation & Safety Recommendations," A. Frank Taylor, ISASI '98 Seminar, Barcelona, October 1998.

"Airworthiness Standards; Crash Resistant Fuel Systems in Normal and Transport Category Rotorcraft; Notice of Proposed Rulemaking," NPRM 90-24, Federal Aviation Administration, October 5, 1990.

"Airworthiness Standards; Crash Resistant Fuel Systems in Normal and Transport Category Rotorcraft; Final Rule," Federal Aviation Administration, October 3, 1994.

"Airworthiness Standards; Crash Resistant Fuel Systems," NPRM, Federal Aviation Administration, February 28, 1990.

"Airworthiness Standards; Crash Resistant Fuel Systems," NTSB Response to ANPRM 85-7, National Transportation Safety Board, July 1985.

"An Analysis of Aircraft Accidents Involving Fires," G.M. Lucha, M. A. Robertson, and F.A. Schooley, NASA CR 137690, Stanford Research Institute, Menlo Park, California, May 1975.

"An Appraisal of the Postcrash Fire Environment," Neva B. Johnson, Donald E. Goebel, and S. Harry Robertson, Technical Report 70-22-CE, U.S. Army Natick Laboratories, Natick, Massachusetts, September 1969.

"An Engineering Investigation and Analysis of Crash Fire-Resistant Fuel Tanks," Merritt M. Yancey and Richard T. Headrick, Report No. NA-69-43, Firestone Coated Fabrics Company, Akron, Ohio, July, 1970, AD709846.

"An Evaluation of the Relative Fire Hazards of Jet A and Jet B for Commercial Flight," R.P. Hibbard and P.T. Hacker, NASA Technical Memorandum X-71437, Lewis Research Center, National Aeronautics and Space Administration, Washington, D. C., October 1973.

"An Investigation of Methods to Control Post-Crash Fuel Spill From Integral Fuel Tanks, Final Report," K.D. Robinson, FAA-RD-71-75, Federal Aviation Administration, Washington, D.C., December 1971, AD733607.

"An Investigation of the Crash Fire Problems in Transport Aircraft Fuel Tanks," R.L. Field, Melvin F. Miller, and George L. Pigman, CAA Technical Development Report No. 134, Technical Development and Evaluation Center, Indianapolis, Indiana, January 1951.

"An LN_2 Fuel Tank Inerting System for Commercial Transports," Kenneth R. Bragg, SAE 740852, Society of Automotive Engineers, Warrendale, PA, October 1974.

"Analysis of Rotorcraft Crash Dynamics for Development of Improved Crashworthiness Design Criteria," Joseph W. Coltman, Akif O. Bolukbasi, and David H. Laananen, DOT/FAA/CT-85/11, FAA Technical Center, Atlantic City Airport, New Jersey, June 1985.

"Analysis of U.S. Civil Rotorcraft Accidents for Development of Improved Design Criteria," Joseph W. Coltman and Lawrence M. Neri, Federal Aviation Administration Technical Center, Atlantic City International Airport, New Jersey, 1986.

"Annual Review of Aircraft Accident Data, U.S. General Aviation Calendar Year 1996," NTSB/ARG-99/01, National Transportation Safety Board, Washington, D.C., May 1999.

"Antimisting Fuel Research and Development for Commercial Aircraft—Final Summary Report," Michael L. Yaffee, DOT/FAA/CT-86/7, Federal Aviation Administration Technical Center, Atlantic City International Airport, New Jersey, April 1986, AD-A172183.

"Appraisal of Hazards to Human Survival in Airplane Crash Fires," Gerard J. Pesman, NACA Technical Note 2996, Lewis Flight Propulsion Laboratory, Cleveland, Ohio, September 1953.

"Army Aviation Safety With Reference to Crash Injury and Crashworthiness Programs," TREC Technical Report 60-77, Flight Safety Foundation, New York, New York, December 1960.

"Army Fixed Wing Accidents Involving Fire," Report No. HF1-61, U.S. Army Board for Aviation Accident Research, Fort Rucker, Alabama, September 1961.

"Army Rotary Wing Accidents Involving Fire," Report No. 2-60, United States Army Board for Aviation Accident Research, Fort Rucker, Alabama, 1960.

"Assessment of Burning Characteristics of Aircraft Interior Materials," A.F. Grand and A.J. Valys, Southwest Research Institute; 166390, NASA, Ames Research Center, Moffett Field, California, April 1982.

"Assessment of the Benefits of Aircraft Crashworthiness," A.E. Gilewicz, USAAAVS System Safety Newsletter, U. S. Army Agency for Aviation Safety, Vol. 5, No. 3, 1976.

"Auxiliary Fuel System Installations," FAA Advisory Circular (AC) 25-8, Federal Aviation Administration, Washington, D.C., May 2, 1986.

"Aviation Fuel Safety," CRC Report No. 482, Coordinating Research Council, Inc., New York, New York, November 1975.

"Aviation Safety and Research Act of 1988" (Public Law 100-591).

"Aviation Safety: Installation of Smoke Detection and Fire Suppression Systems in U.S. Transport Aircraft," U.S. General Accounting Office, Washington, D.C., Resources, Community and Economic Development Div., December 19, 1997, PB99112757.

"Beechcraft 1900C Vertical Impact Test," R. McGuire and T. Vu, DOT/FAA/AR-TN99/25, Federal Aviation Administration William J. Hughes Technical Center, Atlantic City International Airport, New Jersey, May 1999, PB99149726.

"Bibliography of Unclassified Aircraft-Fire Literature," Solomon Weiss and Gerard H, Pesman, RM E9H03, National Advisory Committee for Aeronautics, Washington, D.C., November 10, 1949.

"Breakaway Fuel Cell Concept," Lloyd E. Spencer, TREC Technical Report 62-37, Aviation Crash Injury Research, Phoenix, Arizona, May 1962.

"Calculation of the Strength of Crash-Resistant Fuel Cells for the Wings of a Twin-Engine and a Four-Engine Transport Airplane," D. A. Hillman and R. J. Schroers, Final Report Task No. 59-203.4, National Aviation Facilities Experimental Center, Atlantic City, New Jersey, April 1961.

"Certification of Transport Airplane Mechanical Systems," FAA Advisory Circular (AC) 25-22, Federal Aviation Administration, Washington, D.C., March 14, 2000.

"Certification of Transport Airplane Structure," FAA Advisory Circular (AC) 25-21, Federal Aviation Administration, Washington, D.C., September 1, 1999.

"Certification of Transport Category Rotorcraft," Advisory Circular (AC) 29-2B, Federal Aviation Administration, Washington, D.C., July 30, 1997.

"Commercial Aircraft Airframe Fuel Systems Survey," P. G. Weitz, DOT/FAA/CT-82/80, FAA Technical Center, Atlantic City Airport, New Jersey, July, 1982, AD-A119572.

"Commercial Jet Transport Crashworthiness," E. Widmayer and Otto B. Brende, DOT/FAA/CT-82/86, FAA Technical Center, Atlantic City Airport, New Jersey, April, 1982.

"Conceptual Design Study and Demulsification of Fuel Emulsions by a Coalescence Process," W. J. Asher, Esso Research and Engineering Cp.; USAAVLABS Technical Report 69-16, U.S. Army Aviation Material Laboratories, Fort Eustis, Virginia, April 1969, AD 688973.

"Controlled Impact Demonstration Review," N.A. Blake, SAE Technical Paper 851884, Aerospace Technology Conference and Exposition, Long Beach, California, October 1985.

"Correlation and Assessment of Structural Airplane Crash Data With Flight Parameters at Impact," H.D. Carden, NASA Technical Paper 2083, Langley Research Center, Hampton, Virginia, November 1982.

"Crash Experience of the U.S. Army Black Hawk Helicopter," Dennis F. Shanahan, U.S. Army Aeromedical Research Division, Fort Rucker, Alabama, 1992.

"Crash Fire Hazard Evaluation of Jet Fuels," S.U. Zinn, Jr., Paper No. 720324, presented at National Business Aircraft Meeting at Wichita, Kansas, Society of Automotive Engineers, Inc., New York, March 1972.

"Crash Loads Environment Study," D.P. Fitzgibbon and Reuben P. Vollmer, Technical Report FAA DS-67-2, Federal Aviation Agency, Washington, D.C., February 1967.

"Crash Resistant Fuel Systems Demonstrations and Evaluation," H.P. Scheuerman, Report No. FAA-RD-71-27, National Aviation Facilities Experimental Center, Atlantic City, New Jersey, August 1971.

"Crash Safety Tests of Two Transport Aircraft," Herbert C. Spicer, Jr., Donald W. Voyls, and Donald F. Carroll, SAE 920C, Society of Automotive Engineers, New York, New York, October 1964.

"Crash Simulation Methodologies for Aircraft Structures Used Within European Crashworthiness Research," C.M. Kindervater, D. Kohlgruber, and M. Lutzenburger, German Aerospace Center (DLR), Institute of Structures and Design, Stuttgart, November 1998.

"Crash Survivability of the UH-60A Helicopter," Brian L. Carnell, AGARD, Aerospace Medical Panel Specialists Meeting, Fort Rucker, Alabama, May 1978.

"Crash Survival Design Guide," J.W. Turnbow, D.F. Carroll, J.L. Haley, Jr., and S.H. Robertson, USAAVLABS Technical Report 70-22, U.S. Army Aviation Materiel Laboratories, Fort Eustis, Virginia, August 1969.

"Crash Survival Design Guide," J.W. Turnbow, et al, USAAVLABS Technical Report 67-22, U.S. Army Aviation Materiel Laboratories, Fort Eustis, Virginia, July 1967.

"Crash Survival Design Guide," U.S. Army Air Mobility Research and Development Laboratory, Fort Eustis, Virginia, October 1971.

"Crash Survival Evaluation of the CH-47 Helicopter (A, B And C Models)," D.F. Carroll, S.H. Robertson and R.L. Cook, AvSER Memorandum Report M69-1, Dynamic Science, Phoenix, Arizona, January 1969.

"Crash Survival Evaluation OH-4A Helicopter," J.L. Haley, Jr., S.H. Robertson, and J.W. Turnbow, Memorandum Report No. M-65-9, Aviation Safety Engineering and Research, Phoenix, Arizona, June 1965.

"Crash Survival Evaluation OH-5A Helicopter," AvSER Memorandum Report M66-11, Aviation Safety Engineering and Research, Phoenix, Arizona, April 1966.

"Crash Survival Evaluation OH-6A Helicopter," AvSER Memorandum Report M67-3, Aviation Safety Engineering and Research, Phoenix, Arizona, April 1967.

"Crash Tests of Four Low-Wing Twin-Engine Airplanes With Truss-Reinforced Fuselage Structure," M. Susan Williams and Edwin L. Fasanella, NASA Technical Paper 2070, National Aeronautics and Space Administration, Washington, D.C., September 1982.

"Crash-Resistant Fuel Systems for General Aviation Aircraft," W. Thomas Edwards and William J. Perrella, Jr., SAE Paper 790592, Society of Automotive Engineers, Warrendale, Pennsylvania, 1979.

"Crash-Resistant Fuel Tanks for Helicopters and General Aviation Aircraft," H.D. Smith, presented at National Business Aircraft Meeting, Wichita, Kansas, Society of Automotive Engineers, New York, April 1974.

"Crashworthiness Design Handbook (Proposed)," Department of Transportation, Federal Aviation Administration, July 1971.

"Crashworthy Fuel System Design Criteria and Analyses," Neva B. Johnson, USAAVLABS Technical Report 71-8, U.S. Army Air Mobility Research and Development Laboratory, Fort Eustis, Virginia, March 1971.

"Crashworthy Fuel System Design," S. Harry Robertson and G.I. Walhout, AvSER Technical Report, 66-13, May 1966.

"Crashworthy Fuel Systems," S. Harry Robertson and Ted J. Adamczyk, Aircraft Crashworthiness, University Press of Virginia, Charlottesville, Virginia, 1975.

"Crashworthy Fuel Tanks: How We Got Where We Are and Where We Should Go From Here," S. Harry Robertson and Jeffrey W. Bracken, American Helicopter Society, 55th Annual Forum, Montreal, Quebec, Canada, May 1999.

"Criteria for the Design and Installation of Crash Resistant Fuselage Fuel Cells," David E. North, 2nd Lt., USAF, WADC Technical Note 58-236, Wright Air Development Center, Wright-Patterson U.S. Air Force Base, Ohio, June 1958.

"Design and Evaluation of Crashworthy, Ballistically Tolerant Fuel Tank Material," H.F. Villemain, USAAMRDL Technical Report 74-103, Eustis Directorate, U.S. Army Air Mobility Research and Development Laboratory, Fort Eustis, Virginia, January 1975, AD-B002702.

"Design Considerations to Protect Fuel Systems During a Wheels Up Landing," FAA Advisory Circular (AC) 25-994.1, Federal Aviation Administration, Washington, D.C., July 24, 1986.

"Design, Development, and Evaluation of a Crash-Resistant Fuel System Installation," W. Buckson, W. Schlegel, and I.R. Smith, Technical Report FAA-ADS-27, All American Engineering Company, Wilmington, Delaware, December 1965, AD-654748.

"Development of a Crash-Resistant Flammable Fluids System for the UH-1A Helicopter," S. Harry Robertson, USAAVLABS Technical Report 68-82, U.S. Army Aviation Materiel Laboratories, Fort Eustis, Virginia, January 1969.

"Development of a Protective, Decorative, Fire-Resistant, Low-Smoke Emitting, Thermally Stable Coating Material," Report No. N 76-18234, Institute for Research, Inc., Houston, Texas, January 1976.

"Development of Crash-Resistant Aircraft Flammable Fluid Systems, Part I, Delineation of the Problem," Charles V. Bennett and Robert R. Rodgers, Jr., Technical Development Report No. 397, FAA Technical Development Center, Indianapolis, Indiana, March 1959.

"Development of Crash-Resistant Aircraft Flammable Fluid Systems, Part IIA, Specifications for Prototype Fittings for Bladder-Type Fuel Tanks," John H. Clark, Interim Report Task No. 59-203.8, FAA Test and Experimentation Division, Atlantic City, New Jersey, May 1960.

"Development of Lightweight Fire-Retardant, Low-Smoke High-Strength, Thermally Stable Aircraft Floor Paneling," D.B. Arnold, J.V. Burnside, and J.V. Hajari, Boeing Commercial Airplane Company; Technical Report NASA-CR-147750, National Aeronautics and Space Administration, Houston, Texas, April 1976.

"Effect of Ground Crash Fire on Aircraft Fuselage Integrity," G.B. Geyer, Report No. NA-69-37, Department of Transportation, Federal Aviation Administration, National Aviation Facilities Experimental Center, Atlantic City, New Jersey, December 1969, AD 698806.

"Effects of Polyurethane Foam on Fuel System Contamination," T.O. Reed, Technical Memorandum ENJI-70-10, Fluid Systems Branch, Directorate of Propulsion and Power Subsystems Engineering, Wright-Patterson U.S. Air Force Base, Ohio, November 1970.

"Estimating the Impact of Crashworthiness Standards on Mortality and Morbidity Events in U.S. Army Rotary-Wing Aircraft Mishaps," S.G. Shannon and D.F. Shanahan, USAARL Report No. 93-37, United States Army Aeromedical Research Laboratory, Fort Rucker, Alabama, September, 1993, AD-A277 121.

"Evaluation of Self-Sealing Breakaway Valves for Crashworthy Aircraft Fuel Systems," B. Anson, Dynamic Science Engineering Operations, USAAMRDL Technical Report 71-65, Eustis Directorate, U.S. Army Air Mobility Research and Development Laboratory, Fort Eustis, Virginia, November 1971, AD 738204.

"Evaluation of the UH-1D/H Helicopter Crashworthy Fuel System in a Crash Environment," Richard L. Cook and Donald E. Goebel, USAAMRDL Technical Report 71-47, U.S. Army Air Mobility Research and Development Laboratory, Fort Eustis, Virginia, November 1971.

"Evaluation of Various Sizes and Configurations of Fuel Tanks," D.L. Byerley, Firestone Tire & Rubber Co., USAAMRDL Technical Report 73-74, Eustis Directorate, U.S. Army Air Mobility Research and Development Laboratories, Fort Eustis, Virginia, December 1973, AD 777801.

"Experimental Crash Resistant Fuel Tank Program," S. Harry Robertson and Victor E. Rothe, AvSER Report No. 65-23, Aviation Safety Engineering and Research, Phoenix, Arizona, December 1965.

"FAA Crashworthiness Program for Large and Small Airplanes," James E. Dougherty, Jr. and Nelson N. Shapter, SAE Paper 690321, Society of Automotive Engineers, New York, New York, 1969.

"FAA Structural Crash Dynamics Program Update – Transport Category Aircraft," S. Soltis, C. Caiafa, and G. Wittlin, SAE Technical Paper 851887, Society of Automotive Engineers, Warrendale, Pennsylvania, October 1985.

"Facilities and Methods Used in Full-Scale Airplane Crash-Fire Investigation," Dugald O. Black, NACA Research Memorandum RM E51L06, Lewis Flight Propulsion Laboratory, Cleveland, Ohio, March 1952.

"Final Report Lightweight Crash-Resistant Fuel Tank Material," Report No. TR-91102, U.S. Army Aviation Systems Command, Fort Eustis, Virginia, May 1992.

"Fire and Explosion Manual for Aircraft Accident Investigators," Joseph M. Kuchta, AFAPL-TR-73-74, U.S. Bureau of Mines, Bruceton, Pennsylvania, July 1973.

"Fire and Smoke-Resistant Interior Materials for Commercial Transport Aircraft," National Research Council, National Materials Advisory Board, Publication NMAB-477-1, National Academy Press, Washington, D.C., 1995.

"Fire Safety Aspects of Polymeric Materials, Volume 6—Aircraft: Civil and Military," Publication NMAB 318-6, National Materials Advisory Board, National Academy of Sciences, Washington, D.C., 1977.

"Fire, Fuel and Survival: A Study of Transport Aircraft Accidents, 1955-1974," A.F. Taylor, *AGARD Conference Proceedings 199*, 1975.

"Fire-Resistant Materials: Progress Report," DOT/FAA/AR-97/100, Federal Aviation Administration William J. Hughes Technical Center, Atlantic City International Airport, New Jersey, November 1998.

"Flame Arrestor Materials for Fuel Tank Explosion Protection," Joseph M. Kuchta, Ralph J. Cato, and Whittner H. Gilbert, AFAPL-TR-70-40, Bureau of Mines, Pittsburgh, Pennsylvania, July 1970, AD-874047.

"Flight Vibration and Environmental Effects on Formation of Combustible Mixtures Within Aircraft Fuel Tanks," T.C. Kosvic, N.L. Holgeson, and B.P. Breen, USAAVLABS Technical Report 70-43, U.S. Army Aviation Material Laboratories, Fort Eustis, Virginia, September 1970, AD-875901.

"Fuel Containment Concepts—Transport Category Airplanes," Gil Wittlin, DOT/FAA/CT-87/18, Federal Aviation Administration Technical Center, Atlantic City International Airport, New Jersey, November, 1987.

"Fuel Fire Penetration Test and Destruction of a Transport Aircraft, Final Report," Harry Webster, DOT/FAA/AR-96/48, Federal Aviation Administration William J. Hughes Technical Center, Atlantic City International Airport, New Jersey, December 1996.

"Fuel Line Study: Technical Note," S. Monaco, Report No. DOT/FAA/CT-TN94/14, Federal Aviation Administration Technical Center, Atlantic City International Airport, New Jersey, July 1994, AD-A284-918.

"Fuel Spillage, Ignition Sources, and Postcrash Fire in Survivable General Aviation Airplane Accidents" prepared by B & M Technological Services, Inc., Cambridge, MA, presented to General Aviation Safety Panel Meeting, Wichita, Kansas, June 4, 1986.

"Fuel System Protection Methods" H. W. G. Wyeth, *AGARD-LS-123*, North Atlantic Treaty Organization, 1982.

"Fuel Systems, General Design Specification for, ASC/ENES," U.S. Air Force Guide Specification (AFGS) 87154 A, Wright-Patterson U.S. Air Force Base, Ohio, 1 July 1972 (Superseding MIL-F-87154, August 1980).

"Fuel Tank Access Covers," FAA Advisory Circular (AC 25-963-1) Federal Aviation Administration, Washington, D.C., July 29, 1992.

"Full Scale Crash Test (T-41) of the Yah-63 Attack Helicopter," K.F. Smith, USAAVSCOM TR-86-D-2, U.S. Army Aviation Research and Technology Activity (AVSCOM), Fort Eustis, Virginia, April 1986.

"Full Scale Crash Test of a BK117 Helicopter," Masayoshi Onishi and Tsutomu Yoshimura, Kawasaki Heavy Industries, Ltd., Gifu Works, Japan, March 1985.

"Full Scale Crash Testing of a CH-47C Helicopter," George T. Singley, III, American Helicopter Society, Washington, D.C., May 1976.

"Full-Scale Air Transport Category Fuselage Burnthrough Tests," Harry Webster, DOT/FAA/CT-TN89/65, Federal Aviation Administration, Atlantic City International Airport, New Jersey, February 1990, N9020967.

"Full-Scale Dynamic Crash Test of a Douglas DC-7 Aircraft, Technical Report," W. H. Reed, S. H. Robertson, L. W. T. Weinberg, and L. H. Tyndall, FAA Technical Report ADS-37, Aviation Safety Engineering and Research, Phoenix, Arizona, April 1965.

"Full-Scale Dynamic Crash Test of a Lockheed Constellation Model 1649 Aircraft," W.H. Reed, S.H. Robertson, L.W.T. Weinberg, and L.H. Tyndall, Technical Report FAA-ADS-38, Aviation Safety Engineering and Research, Phoenix, Arizona, October 1965.

"Full-Scale Performance Study of a Prototype Crash Fire Protection System for Reciprocating Engine-Powered Airplanes," Dugald O. Black and Jacob C. Moser, NACA Research Memorandum E55B11, Lewis Flight Propulsion Laboratory, Cleveland, Ohio, November 1955.

"Fuselage Burnthrough From Large Exterior Fuel Fires," Webster, Harry, DOT/FAA/CT-90-10, Federal Aviation Administration Technical Center, Atlantic City International Airport, New Jersey, July, 1984, AD-A286-925.

"Fuselage Ventilation Due to Wind Flow About a Postcrash Aircraft, Jay W. Stuart, *JPL Publication 80-36*, Jet Propulsion Laboratory, Pasadena, California, June 1980.

"General Aviation Accidents: Postcrash Fires and How to Prevent or Control Them," Report No. NTSB-AAS-80-2, National Transportation Safety Board, Washington, D.C., August 1980.

"Heat Release Rate Calorimetry of Engineering Plastics," A.L. Bridgman and G.L. Nelson, *Journal of Fire and Flammability*, Volume 13, p. 114, April 1982.

"Helicopter Crashworthy Fuel Systems and Their Effectiveness in Preventing Thermal Injury," S. C. Knapp, Pierre Allemond, and David H. Karney, *AGARD Conference Proceedings No. 225*, Technical Editing and Reproduction Ltd., Harford House, London, England, December 1978.

"Helicopter Fuel Bladder Drop Tests and Analyses," Richard L. Boitnott, Akif O. Bolukbasi, and Sotiris Kellas, American Helicopter Society, Washington, D.C., May 1994.

"Helicopter Structural Design for Impact Survival," J.L. Haley, Jr., SW-70-16, U.S. Army Board for Aviation Accident Research, Fort Rucker, Alabama, presented at the Joint Symposium on Environmental Effects of VTOL Designs, in Arlington, Texas, November 1970.

"Ignition of Fuel Sprays by Hot Surfaces and Stablization of Aircraft Fires," J. G. Skifstad, et al., AFOSR-TR-79-0079, Purdue University, West Lafayette, Indiana, November 1978, AD-AO65153.

"Impact Data From a Transport Aircraft During a Controlled Impact Demonstration," Edwin L. Fasanella, Emilio Alfaro-Bou, and Robert J. Hayduk, NASA Technical Paper 2589, Langley Research Center, Hampton, Virginia, 1986.

"Impact Survival in Air Transport Accidents," G. Bruggink, AvCIR-8-CSS-129, Aviation Crash Injury Research, Phoenix, Arizona, January 1961.

"Impact Tests of Flexible Nonmetallic Aircraft Fuel Tanks Installed in Two Categories of Simulated Wing Structures," Charles V. Bennett and Robert J. Schroers, CAA Technical Development Report No. 291, Technical Development Center, Indianapolis, Indiana, January 1957.

"Improvements in Fuel Containment Crashworthiness for Aircraft Operated by the Mission Aviation Community, Phase I Report," S. H. Robertson, Mission Aviation Fellowship, Redlands, CA, September 1980.

"Impulse Analysis of Airplane Crash Data With Consideration Given to Human Tolerance," Huey D. Carden, SAE Technical Paper 830748, Society of Automotive Engineers, Warrendale, Pennsylvania, April 1983.

"Installation of Crashworthy Fuselage Fuel Tanks and Fuel Lines," FAA Advance Notice of Proposed Rulemaking (ANPRM) 89-11, Federal Register, 54 FR 18824, May 2, 1989.

"Installation of Plastic Foam and Metallic Mesh in Fuel Tanks of Helicopters and Small Airplanes," Advisory Circular, 20.XX, Federal Aviation Administration, Washington, D.C., April 1984.

"Integrated Aircraft Fuel Tank Fire and Explosion Protection Systems-Phase I AND II," Q.C. Malmberg, AFAPL-TR-75-93, McDonnell Douglas Corp., St. Louis, Missouri, July 1975, AD-A020589.

"Investigation of the Crash-Impact Characteristics of Advanced Airframe Structures, Final Report," J.D. Chronkhite, T.J. Haas, V.L. Berry, and R. Winter, USARTL-TR-79-11, AVRADCOM, Fort Eustis, Virginia, September 1979.

"Investigation of Transport Airplane Fuselage Fuel Tank Installations Under Crash Conditions," Gil Wittlin, DOT/FAA/CT-88/24, FAA Technical Center, Atlantic City International Airport, New Jersey, July 1989, ADA212227.

"Investigation of Two Methods for Improving the Crashworthiness of Integral Fuel Tanks," Robert H. Ahlers, FAA-RD-70-56, Federal Aviation Administration, Washington, D.C., November 1970, AD715445.

"Kane's Method for Analyzing Crash Sequences and Crashworthy Design," S. Hanagud and S. Sarkar, Georgia Institute of Technology, Atlanta, Georgia, 1983.

"Kinematics of U.S. Army Helicopter Crashes: 1979-85," Dennis F. Shanahan and Maureen O. Shanahan, *Aviation, Space, and Environmental Medicine*, February 1989, pp. 112-121.

"KRASH Analysis Correlation With Full Scale Yah-63 Helicopter Crash Test," V. L. Berry and J. D. Chronkhite, Bell Helicopter Textron, Inc., July 1986.

"KRASH Dynamics Analysis Modeling—Transport Airplane Controlled Impact Demonstration Test," Gil Wittlin and Bill LaBarge, DOT/FAA/CT-85/9, FAA Technical Center, Atlantic City International Airport, New Jersey, May 1985.

"Light Fixed- and Rotary-Wing Aircraft Crashworthiness," Military Standard MIL-STD-1290, Department of Defense, Washington, D. C., January 1974.

"Light Fixed- and Rotary-Wing Aircraft Crashworthiness," Military Standard MIL-STD-1290A (AV), Department of Defense, Washington, D.C., September 1988.

"Lightweight Crash-Resistant Fuel Tank Material," Dirk J. Hardtmann, Report No. TR-91102, Simula Inc., Phoenix, Arizona, May 1992.

"Lockheed Aircraft Cutaways," M. Badrocke and B. Gunston, Osprey Publishing, Ltd., London, England, 1998.

"Longitudinal Acceleration Tests of Overhead Luggage Bins and Auxiliary Fuel Tank in a Transport Airplane Airframe Section," R. McGuire and T. Macy, DOT/FAA-AR-99/4, Federal

Aviation Administration William J. Hughes Technical Center, Atlantic City International Airport, New Jersey, June 1999.

"Longitudinal Impact Test of a Transport Airframe Section," Richard Johnson and Barry Wade, DOT/FAA/CT-87/26, FAA Technical Center, Atlantic City International Airport, New Jersey, Final Report, July 1988, AD-A199309.

"Mechanism of Start and Development of Aircraft Crash Fires," I. Irving Pinkel, G. Merritt Preston, and Gerard J. Pesman, NACA Report 1133, Lewis Flight Propulsion Laboratory, Cleveland, Ohio, 1953.

"Minutes of the Crash-Resistant Fuel Tank Conference," Technical Development Center, Indianapolis, Indiana, June 1956.

"NASA Experiments Onboard the Controlled Impact Demonstration," Robert J. Hayduk, Emilio Alfaro-Bou, and Edwin L. Fasanella, SAE Technical Paper 851885, Society of Automotive Engineers, Warrendale, Pennsylvania, 1985.

"NASA/FAA General Aviation Crash Dynamics Program—A Status Report," R.G. Thompson and R.C. Goetz, AIAA Paper No. 79-0780, NASA Langley Research Center, Hampton, Virginia, April 1979.

"New Energy-Absorbing Materials for Crash-Resistant Fuel Tanks," W.C. McDonald, SAE Paper 680210, Society of Automotive Engineers, New York, New York, April 1968.

"Occupant Injury Mechanisms in Civil Helicopter Accidents," Richard G. Snyder, *Operational Helicopter Aviation Medicine*, *AGARD Conference Proceedings No. 255*, Technical Editing and Reproduction Ltd., Harford House, London, England, December 1978.

"Operational Helicopter Aviation Medicine," *AGARD-Conference Proceedings-255*, Advisory Group for Aerospace Research and Development, North Atlantic Treaty Organization, May 1978.

"Operational Helicopter Aviation Medicine," Knapp, S.C., ed., *AGARD Conference Proceedings No. 255*, Technical Editing and Reproduction Ltd., Harford House, London, England, December 1978.

"Optimization of JP-4 Fuel Emulsions and Development of Design Concepts for Their Demulsification," J.C. Harris and E.A. Steinmetz, USAAVLABS Technical Report 68-79, U.S. Army Aviation Materiel Laboratories, Fort Eustis, Virginia, November 1968, AD-683597.

"Origin and Prevention of Crash Fires in Turbojet Aircraft," I. Irving Pinkel, Solomon Weiss, G. Merritt Preston, and Gerard J. Pesman, NACA Report 1363, Lewis Flight Propulsion Laboratory, Cleveland, Ohio, 1958.

"Piper Navajo Fuel Tanks FAA Crash Resistant Modifications Tanks and Testing," Final Report FC-1641-77, Uniroyal, Inc., Engineered Systems Department, Mishawaka, Indiana, March 1977.

"Preliminary Survey of the Aircraft Fire Problem," Cleveland Laboratory Aircraft Fire Research Panel, NACA Research Memorandum No. E8B18, Flight Propulsion Laboratory, Cleveland, Ohio, May 1948.

"Proceedings of the International Conference for the Promotion of Advanced Fire Resistant Aircraft Interior Materials," DOT/FAA/CT-93/3, Federal Aviation Administration Technical Center, Atlantic City International Airport, New Jersey, February 1993, N94-10766.

"Proposed Military Specification MIL-T-27422b, Tank, Fuel, Crash-Resistant, Aircraft," S. Harry Robertson, AvSER M-69-3, *Dynamic Science* (the AvSER Facility), Phoenix, Arizona, April 1969.

"Realistic Civil Helicopter Crash Safety," Roy G. Fox, *Crashworthy Design of Rotorcraft*, Georgia Institute of Technology, Atlanta, Georgia, April 1986.

"Relation Between Inflammables and Ignition Sources in Aircraft Environments," W.D. Scull, NACA Report 1019, Lewis Flight Propulsion Laboratory, Cleveland, Ohio, 1951.

"Review and Evaluation of the Literature on Fuel Containment and Fuel Tank Explosion Suppression Technology to Assess Applicability to General Aviation Airplanes," Final Report, Richard P. Scott, FAA Technical Center, Atlantic City Airport, New Jersey, August 1985.

"Revised Structural Loads Requirements for Transport Category Airplanes," FAA Amendment 25-91, Federal Register, 52 FR 40702, July 29, 1997.

"Rotary-Wing Aircraft Crash Resistance," Aeronautical Design Standard (ADS) 36, U.S. Army Aviation Systems Command, St. Louis, Missouri, Directorate for Engineering, 1 May 1987.

"Rotorcraft Crashworthy Airframe and Fuel System Technology Development Program," Coltman, Joseph W., Report No. DOT/FAA/CT-91/7, FAA Technical Center, Atlantic City International Airport, New Jersey, October 1994.

"Safety Evaluation of Emulsified Fuels," Shaw, L.M., USAAMRDL Technical Report 71-29, Eustis Directorate, U.S. Army Air Mobility Research and Development Laboratory, Fort Eustis, Virginia, June 1971.

"Self-Sealing Breakaway Valves for Crash-Resistant Aircraft Fuel and Oil Systems," Aerospace *Recommended Practice (ARP) 1616, Revision A*, Society of Automotive Engineers, Warrendale, Pennsylvania, April 1991.

"Smoke and Toxicity Hazards in Aircraft Cabin Furnishings," R.V. Mason, *Annual of Occupational Hygiene*, Vol. 17, 1974, pp. 159-165.

"Some Developments for Greater Crash Safety INI Aircraft," Robert J. Schroers, SAE Quarterly Transactions, Vol. 6, No. 2, April 1952.

"Special Aviation Fire and Explosion Reduction (Safer) Advisory Committee Final Report, Volumes I, IIA AND IIB," J.H. Enders and E.C. Wood, Report No. FAA-ASF-80-4, Office of Aviation Safety, Washington, D.C., June 1980.

"Special Study: U.S. Air Carrier Accidents Involving Fire, 1965 Through 1974 and Factors Affecting the Statistics," NTSB-AAS-77-1, National Transportation Safety Board, Washington, D.C., February 1977, PB266883.

"Structural Design for Fuel Containment Under Survivable Crash Conditions," P.M. Nissley and T.L. Held, FAA Technical Report ADS-19, General Dynamics/Convair, San Diego, California, August 1964.

"Structural Response of Transport Airplanes in Crash Situations, Final Report," R.G. Thomson and C. Caiafa, DOT/FAA/CT-83/42, FAA Technical Center, Atlantic City Airport, New Jersey, November 1983.

"Study of Aircraft Crashworthiness for Fire Protection," A. Cominsky, NASA Contractor Report 166159, Douglas Aircraft Company, Long Beach, California, January 1981.

"Study of General Aviation Fire Accidents (1974-1983)," L. Benner, Jr., R. Clark, and R. Lawton, Report No. DOT/FAA/CT-86/24, FAA Technical Center, Atlantic City Airport, New Jersey, February 1987.

"Subsystems – 30 October 1998," Joint Service Specification Guide (JSSG) 2009, Joint Aeronautical Commanders' Group (JACG), Aviation Engineering Board (AEB), Wright-Patterson AFB, Ohio, Release 1, 20 November 1998.

"Summary of U.S. Army Crashworthy Fuel Systems Accident Experience," William F. Gabella and Wade L. Young, 1970 - 1973, *System Safety Newsletter*, Vol. 2, No. 3, U.S. Army Agency for Aviation Safety, Fort Rucker, Alabama, 1973.

"Survey of NASA Research and Crash Dynamics," R.G. Thompson, H.D. Carden and R.J. Hayduk, NASA Technical Paper 2298, Langley Research Center, Hampton, Virginia, April 1984.

"Systems and Techniques for Reducing the Incidence of Post-Crash Fuel System Fires and Explosions," Report to Congress FAA-P-8110.3, U.S. Department of Transportation, Washington, D.C., December 1988.

"Tank, Fuel, Crash-Resistant, Aircraft," Military Specification MIL-T-27422B, Department of Defense, Washington, D. C., February 1970.

"Tests of Crash-Resistant Fuel System for General Aviation Aircraft," W. N. Perrella, Jr., Report No. FAA-RD-78-28, Federal Aviation Administration, Washington, D. C., March 1978.

"The Bell Model 222," James R. Garrison and Herman H. Waldrup, SAE Paper 770951, Society of Automotive Engineers, Warrendale, Pennsylvania, November 1977.

"The Development of Aircraft Crash-Resistant Fuel Cells, Safety Valves, and Breakaway Accessories," John Sommers, Jr. and John H. Clark, SAE Paper 517D, Society of Automotive Engineers, New York, New York, April 1962.

"The Development of an Aircraft Safety Fuel," R. E. Miller and S. P. Wilford, Royal Aircraft Establishment, England; Report No. A76-14419, American Institute of Aeronautics and Astronautics, New York, April 1975.

"The Golem at Large: What You Should Know About Technology," Harry Collins and Trevor Pinch, Cambridge University Press, 1998. ISBN 0-521-55141-2.

"The Illustrated History of McDonnell Douglas Aircraft," M. Badrocke and B. Gunston, Osprey Publishing, Oxford, England, 1999.

"The Influence of Fire and Smoke Emission Properties on the Selection of Materials for Aircraft Interiors," M. A. Denney and D. Broadley, American Institute of Aeronautics and Astronautics, New York, New York, November 1971.

"The Relative Fire Resistance of Select Thermoplastic Materials," D.A. Kourtides and J.A. Parker, *Plastics Design & Processing*, April 1978.

"The Role of Aircraft Panel Materials in Cabin Fires and Their Properties," J. B. Quintiere, V. Babrauskas, L. Cooper, M. Harkleroad, and K. Steckler, National Bureau of Standards; DOT/FAA/CT-84/30, Federal Aviation Administration, Atlantic City Airport, New Jersey, June 1985, AD-A168 251.

"The Status of Crashworthiness Design Criteria," James C. Warrick and Stanley P. Desjardins, *Crashworthy Design of Rotorcraft*, Georgia Institute of Technology, Atlanta, Georgia, April 1986.

"The Toxicology of Fire," J.A. Zapp, Jr., Medical Division Special Report No. 4, Army Chemical Center, Maryland, April 1951.

"The UH-1D/H Crash Resistant Fuel System Development Program," S. Harry Robertson, Dynamic Science, Phoenix, Arizona, December 1969.

"Transport Aircraft Accident Dynamics," A. Cominsky, DOT/FAA/CT-82/70, FAA Technical Center, Atlantic City Airport, New Jersey, March 1982, AD-A140193.

"Transport Aircraft Crash Dynamics," G. Wittlin, M. Gamon and D. Shycoff, DOT/FAA/CT-82/69, FAA Technical Center, Atlantic City Airport, New Jersey, March 1982.

Transport Airplane Cabin Interiors Crashworthiness Handbook, FAA Draft Advisory Circular (AC) 25-17A, Federal Aviation Administration, Washington, D.C., November 25, 1991.

Transport Airplane Cabin Interiors Crashworthiness Handbook, FAA Advisory Circular (AC) 25-17, Federal Aviation Administration, Washington, D.C., July 15, 1991.

"Transport Airplane Fuel Tank System Design Review, Flammability Reduction, and Maintenance, and Inspection Requirements; Proposed Rule, Part VI," NPRM 99-18, FAA/DOT, October 29, 1999.

Transport Airplane Propulsion Engine and Auxiliary Power Unit Installation Certification Handbook: The Propulsion Mega-AC, FAA Draft Advisory Circular (AC) 25-XX.

"U.S. Army Aviation R&D Technical Reports Published in 1972," Air Mobility Research and Development Laboratory, Ames Research Center, Moffett Field, California, June, 1973.

"U.S. Army Helicopter Accidents Involving Fire," Spezia, E., Report 1-64, U.S. Army Board of Aviation Accident Research, Fort Rucker, Alabama, 1963.

"United States Army Aviation Crash Injury Research," TREC Technical Report 62-13, Aviation Crash Injury Research, Phoenix, Arizona, September 1961.

"United States Army Aviation Crash Survival Research – Summary Report," USAAVLABS Technical Report 66-43, U.S. Army Aviation Materiel Laboratories, Fort Eustis, Virginia, June 1966.

"Vertical Drop Test of a Beechcraft 1900C Airliner," R. McGuire and T. Vu, DOT/FAA/AR-96/119, Federal Aviation Administration William J. Hughes Technical Center, Atlantic City International Airport, New Jersey, May 1998, PB98152770.

"Vertical Drop Test of a Metro III Aircraft," Robert J. McGuire, William J. Nissley, and James E. Newcomb, Final Report, DOT/FAA/CT-93/1, FAA Technical Center, Atlantic City International Airport, New Jersey, June 1993.

"Vertical Drop Test of a Narrow-Body Fuselage Section With Overhead Stowage Bins and Auxiliary Fuel Tank System Onboard," Final Report, Thomas V. Logue, Robert J. McGuire, John W. Reinhardt, and Tong U. Vu, DOT/FAA/CT-94/116, Federal Aviation Administration Technical Center, Atlantic City International Airport, New Jersey, April 1995.

"Vertical Drop Test of a Shorts 3-30 Airplane," Allan Abramowitz, Philip A. Ingraham, and Robert McGuire, DOT/FAA/AR-99/87, FAA William J. Hughes Technical Center, Atlantic City International Airport, New Jersey, November 1999.

"Vertical Drop Test of a Transport Fuselage Center Section Including the Wheel Wells," M. Susan Williams and Robert J. Hayduk, NASA Technical Memorandum 85706, Langley Research Center, Hampton, Virginia, October 1983.

"Vertical Drop Test of a Transport Fuselage Section Located Forward of the Wing," M. Susan Williams and Robert J. Hayduk, NASA Technical Memorandum 85679, Langley Research Center, Hampton, Virginia, August 1983.

"Wing Leading Edge Fuel Tank Impact Tests," Final Report, Larry W. Hackler, FAA-RD-72-83, Federal Aviation Administration, Washington, D.C., October 1972, AD751522.

"Wire-Braided Hose Chafing Tests," Donald R. Artis, Jr., USAAMRDL Technical Report 72-1, Eustis Directorate, U.S. Army Air Mobility Research and Development Laboratory, Fort Eustis, Virginia, January 1972, AD738842.

"World Commercial Aircraft Accidents, 2nd Edition, 1946-1992," C.Y. Kimura, Lawrence Livermore National Laboratory, January 1993, UCRL-ID-112905.

"Yah-63 Helicopter Crashworthiness Simulation and Analysis," V.L. Berry, J.D. Chronkhite and T.J. Haas, USAAVRADCOM-TR-82-D-34, U.S. Army Research and Technology Laboratories (AVRADCOM), Fort Eustis, Virginia, February 1983.

APPENDIX A—TECHNICAL DATA SHEET FOR THE SELF-SEALING BREAKAWAY VALVE USED IN THE DC-9 AIRLINER AUXILIARY FUEL SYSTEM FUEL LINES—ISSUED 1967

Aeroquip

REG. TRADEMARK

AEB-122 **COUPLINGS**

AE93093Z SELF-SEALING "BREAKAWAY" FUEL COUPLING

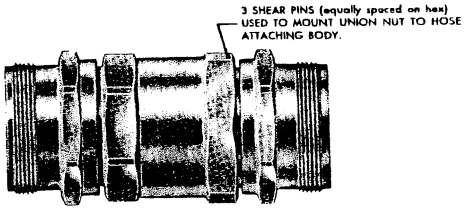

CONNECTED

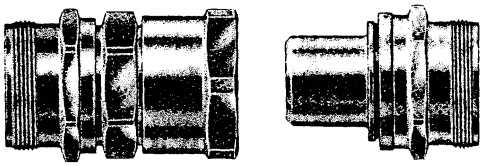

BREAKAWAY POSITION

P/N's—AE93093Z (Coupling Assembly)
AE93094Z (Coupling Half-Bulkhead)
AE93095Z (Coupling Half-Hose Attaching)

Design Specifications

Media—Fuel

Pressure—Operating		30 psi
	Proof	60 psi (Coupled)
		60 psi (Uncoupled)
	Min. Burst	90 psi (Coupled)
		90 psi (Uncoupled)

Temperature— −65°F to +160°F

Material—Aluminum

Seals—BUNA-N

Dimensions—Reference standard drawings

Testing—Coupling is a modification of the 3750 series which is approved to the requirements of MIL-C-7413A. Pre-production testing is described in TR 62207D.

Design Features

1. Lightweight because of all aluminum construction.

2. Internal valve design provides smooth flow pattern and is identical to that used in Aeroquip standard 3750 series couplings.

3. The connecting union nut is mounted on the hose attaching half by incorporating three (3) shear pins which are designed to break away at 220 to 275 lbs. pull. When rated pull is achieved, coupling halves separate. Valve action shuts off fluid flow preventing excessive fluid spillage.

4. Coupling may be used with other fluid applications with appropriate seal changes.

Application History

Developed for manufacturer's use on fuel system of a commercial aircraft. Coupling designed to separate upon impact at an established force to effect shut-off of fuel flow in inaccessible area.

Copyright 1967 by Aeroquip Corporation

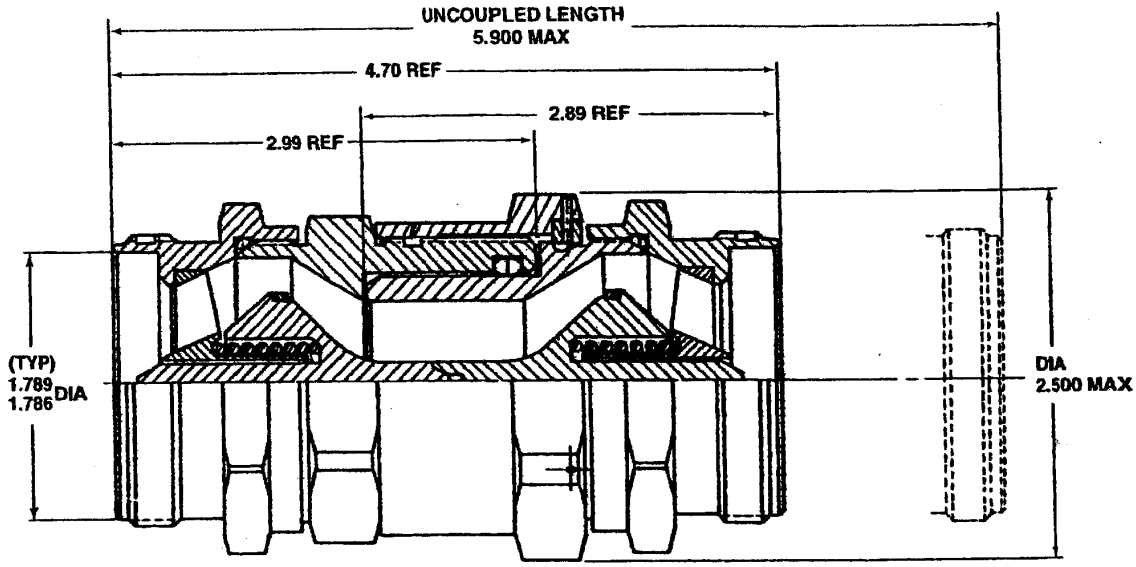

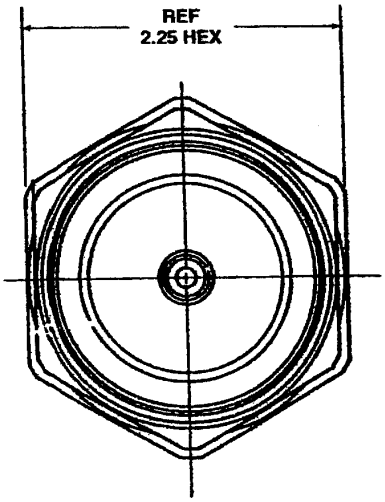

Aeroquip

AEROQUIP CORPORATION / JACKSON, MICHIGAN
AIRCRAFT DIVISION

PLANTS: Jackson, Michigan
Dallas, Texas / Burbank, California

AEROQUIP (CANADA) LTD., Toronto 19, Ontario
AEROQUIP G.m.b.H., Baden Baden, Germany

Specifications subject to change without notice / Aeroquip Products are protected by patents internationally

2A 2M 1-67 Litho in U. S. A.

APPENDIX B—UNISSUED ROUGH DRAFT OF THE FAA PREPARED NPRM 89-11A

[4910-13] DRAFT 11/7/95

DEPARTMENT OF TRANSPORTATION

Federal Aviation Administration

14 CFR Part 25

[Docket No. 25890; Notice No. 89-11A]

RIN 2120-AC87

Fuel System Crash Resistance

AGENCY: Federal Aviation Administration, DOT.

ACTION: Notice of proposed rulemaking.

SUMMARY: This notice proposes an amendment to the airworthiness standards for transport category airplanes to require improved airplane fuel system crash resistance. The current standards would be amended to require minimization of ~~that~~ fuel spillage as the result of ~~following~~ an accident. ~~be minimized.~~ Methods that would be required to reduce fuel spillage include: (1) a means to shut off the airplane fuel supply to each engine during both the normal and emergency shutdown sequence; (2) location of fuselage- mounted fuel tanks in protected positions so that exposure to penetration or damage due to fuselage deformation, fuselage separation, or displaced structural members is unlikely; (3) a means to shut off the fuel supply to fuel lines routed outside the fuel tank walls during the takeoff and landing phases of flight, or installation of self-sealing fittings in locations where damage is likely during fuselage or engine separation; and (4) improved impact resistance and elongation requirements for essential fuel lines routed outside the fuel tank walls and located within or adjacent to the fuselage. This proposal is in response to the Aviation Safety Research Act of 1988 and is intended to minimize the potential for post-crash fire and to provide additional passenger evacuation time following impact survivable accidents. The proposed amendments would apply to manufacturers of newly designed transport category airplanes.

DATES: Comments must be received on or before [insert date 120 days after date of publication]

ADDRESSES: Comments on this proposal may be mailed in duplicate to: Federal Aviation Administration, Office of the Chief Counsel, Attention: Rules Docket (AGC-10), Docket No. 25890, 800 Independence Avenue SW., Washington, DC 20591, or delivered in duplicate to: Room 915G, 800 Independence Avenue SW., Washington, DC. Comments must be marked: Docket No. 25890. Comments may be inspected in Room 915G weekdays, except Federal holidays, between 8:30 a.m. and 5:00 p.m. In addition, the FAA is maintaining an information docket of comments in the Office of the Assistant Chief Counsel (ANM-7), Federal Aviation Administration, Northwest Mountain Region, 1601 Lind Avenue SW., Renton, Washington 98055-4056. Comments in the information docket may be inspected in the Office of the Assistant Chief Counsel weekdays, except Federal holidays, between 7:30 a.m. and 4:00 p.m.

FOR FURTHER INFORMATION CONTACT: Michael E. Dostert, FAA, Airframe and Propulsion Branch (ANM-112), Transport Airplane Directorate, Aircraft Certification Service, 1601 Lind Avenue SW., Renton, Washington 98055-4056; telephone (206) 227-2132; facsimile (206) 227-1320.

SUPPLEMENTARY INFORMATION:

Comments Invited

Interested persons are invited to participate in this proposed rulemaking by submitting such written data, views, or arguments as they may desire. Comments relating to any environmental, energy, or economic impact that might result from adopting the proposals contained in this notice are invited. Substantive comments should be accompanied by cost estimates. Commenters should identify the regulatory docket or notice number and submit comments in duplicate to the Rules Docket address specified above. All comments received on or before the closing date for comments will be

considered by the Administrator before taking action on this proposed rulemaking. The proposals contained in this notice may be changed in light of comments received. All comments will be available in the Rules Docket, both before and after the closing date for comments, for examination by interested persons. A report summarizing each substantive public contact with FAA personnel concerning this rulemaking will be filed in the docket. Commenters wishing the FAA to acknowledge receipt of their comments must submit with those comments a self-addressed, stamped postcard on which the following statement is made: "Comments to Docket No. 25890." The postcard will be date stamped and returned to the commenter.

Availability of NPRM

Any person may obtain a copy of this notice by submitting a request to the Federal Aviation Administration, Office of Public Affairs, Attention: Public Information Center, APA-230, 800 Independence Avenue SW, Washington, DC 20591, or by calling (202) 267-3484. Communications must identify the notice number of this NPRM. Persons interested in being placed on a mailing list for future rulemaking documents should also request a copy of Advisory Circular No. 11-2A, Notice of Proposed Rulemaking Distribution System, which describes the application procedure.

Background

Improving airplane fuel system crash resistance has long been a subject of proposed FAA regulatory action. In 1964, the FAA considered adopting standards for crash-resistant fuel tanks, self-sealing breakaway fuel line fittings, and engine ignition suppression systems for transport category airplanes. It was found, however, that insufficient technical information existed at that time to provide a basis for developing regulatory standards. Subsequently, the FAA considered other means to mitigate the post-crash fire and explosion hazard, such as fuel tank inerting and suppression systems. In response to a recommendation from the National Transportation Safety Board (NTSB)

in 1971 and a subsequent petition for rulemaking from the Aviation Consumer Action Project (ACAP) in 1972, the FAA issued Notice 74-16 (39 FR 12260, April 4, 1974) proposing to require the installation of means to prevent fuel system explosion. As a result of the comments made in response to Notice 74-16, the FAA determined that such means would have little or no effect in reducing post-crash fire and explosion hazards when fuel is spilled from damaged tanks. It was also concluded in a 1977 public hearing that crash-resistant, wing-mounted fuel tanks would not be effective in view of the wing damage and separations that had occurred in several impact-survivable accidents. The conclusions reached at these hearings have been supported by subsequent studies and research projects conducted by the FAA and industry. As a result of the information gained from the public hearing, the FAA withdrew Notice 74-16 in 1978 and established the Special Aviation Fire and Explosion Reduction (SAFER) Advisory Committee to evaluate possible means to improve survivability in the post-crash event.

The SAFER Committee consisted of a chairman, executive director, and 24 representatives spanning the spectrum of international aviation interests. The committee reviewed worldwide transport airplane accidents involving post-crash fuel fires and fuel tank explosions that had occurred between 1964 to 1978 and concluded that with existing technology, the potential for post-crash fires and explosions could be reduced. (The SAFER Committee's advice and recommendations to the FAA are embodied in a final report, FAA-ASF-80-4, "Final Report of the Special Aviation Fire and Explosion Reduction (SAFER) Advisory Committee," dated June 26, 1980, a copy of which is contained in the docket for this rulemaking.)

On the basis of available accident data, the SAFER Committee recommended two propulsion system related actions to amend 14 CFR part 25 of the Federal Aviation Regulations (FAR). The first recommendation concerned a design practice in use on some current airplanes that provides for flame arrestors in the fuel tank vent lines to

reduce the likelihood of fuel tank explosion caused by flame propagation into the tank through the fuel tank vent. The second recommendation required closure of both fuel tank-to-engine and engine fuel control shutoff valves during normal engine shutdown. The Committee considered that this latter design practice would maximize the probability of engine fuel supply shutoff in post-crash fire accidents.

The Committee~~Commitee~~ also reviewed fuselage fuel system designs and determined that certain industry design practices, including providing for displacement of the tank without leakage, the use of flexible stretchable fuel lines, locating fuel tanks outside areas where penetration from displaced structural members was likely, and providing considerable clearance between the tank and surrounding structure to minimize tank damage, provided safe auxiliary fuel tank installations.

To implement the SAFER propulsion system recommendations, preliminary rulemaking action was initiated. Advance Notice of Proposed Rulemaking (ANPRM) No. 84-17 was published in the *Federal Register* on September 26, 1984 (49 FR 38078), for the purpose of obtaining public comments, information, and data relative to adding new airworthiness standards applicable to transport category airplane fuel systems. The objective of the rulemaking proposed in Notice 84-17 was to develop airworthiness standards that would provide protection against fuel tank explosions following a post-crash ground fire, and that would assure engine and auxiliary power unit fuel supply shutoff to reduce the fire hazard from spilled fuel.

While the rulemaking for Notice 84-17 progressed, Congress enacted Public Law 100-591, "Aviation Safety Research Act of 1988." Section 9 (a) of that Act required the Administrator of the FAA to issue an ANPRM to determine the feasibility of installing, in all air carrier airplanes, crashworthy fuselage fuel tanks and fuselage fuel lines that are rupture resistant and that disconnect and seal in the event of an accident. Notice 89-11 was published in response to that action.

Notice 89-11 contained seventeen questions intended to obtain information regarding the economic and technological feasibility, costs (weight/range reduction/hardware, design, maintenance), safety benefits, scope, applicability, and alternatives of a regulatory change requiring the installation of crashworthy fuselage fuel tanks and fuel lines that are rupture resistant and that disconnect and seal in the event of an accident.

Discussion of Comments

Twenty-four commenters responded to **the seventeen questions contained in Notice 89-11. Commenters included** the general public, airplane and component manufacturers, and other interested organizations in the United States and Europe. All commenters agreed with the desired goal of reduc**ing** post-crash fuel leakage; however, comments and information provided in response to many of the questions posed in the notice indicated that more effective fuel leak minimization can be achieved by modifying the methods discussed within the notice. ~~that the FAA should modify the original proposal.~~

Crashworthy Auxiliary Fuel Tanks

In regard to the merits of ~~proposal to~~ requiring~~e~~ auxiliary fuel tanks located in the fuselage to be crashworthy, commenters opposing the concept~~proposal~~ argue that the added cost and complexity of designing fuselage fuel tanks that are more impact resistant is not justified based on a review of impact survivable accidents. Several commenters, including the European Joint Aviation Authorities (JAA), question the relative benefits of changing the current fuselage fuel tank crash resistance requirements. A JAA review of United Kingdom historical data for a twelve-year period indicates that although fuel-fed post impact fires occurred in a significant percentage of the cases, there were no cases that led to recommendations that fuselage fuel tank crashworthiness be improved. The JAA also states that fuselage fuel tanks located within the wing center section are

normally contained within a strong structural framework and appear to be effectively protected.

The FAA agrees with the JAA findings, which are supported by information contained within FAA Report No. DOT/FAA/CT-87/18 "Fuel Containment Concepts-Transport Category Airplanes," dated November 1987; and FAA report "Evaluation of Expected Effectivity of Antimisting Fuel in Post Crash Fire Accidents," 1964-1983. (Copies of these documents are available in the docket.) Information within these documents indicates that integral fuel tanks located in the wing outboard of the fuselage and fuel lines located within the fuselage are the main sources of leakage during impact survivable accidents. Fuselage fuel tanks, including those located within the wing center section, were not identified to have been the primary source of leakage in any of the 70 impact survivable accidents reviewed.

Two other commenters stated that existing industry design practices and FAA policy provided in Advisory Circular 25-8, "Auxiliary Fuel System Installations," dated May 5, 1986, have provided for auxiliary fuel tank installations that have been effective at reducing the post-crash fuel fire hazard from fuselage fuel tanks. The FAA agrees that certain design practices utilized by some manufacturers, such as the use of self-sealing fittings, the use of flexible stretchable fuel lines, and locating fuel tanks where damage from displaced landing gear or structural members is unlikely, do improve the crash resistance of fuselage-mounted auxiliary fuel tank installations. However, these practices are not currently mandated by the regulations and are not utilized by all manufacturers of transport category airplanes.

Currently mandated practices include § 25.721 (a)(1), which requires that the landing gear and fuel system be designed such that if the landing gear fails due to overloads (in the upward and aft directions) during takeoff and landing, the failure is not likely to cause "spillage of enough fuel from any fuel system in the fuselage to constitute a fire hazard."

In addition, § 25.963 (d) requires that fuselage fuel tanks resist rupture and retain fuel under the emergency landing conditions defined in § 25.561 and be "in a protected position so that exposure of the tanks to scraping action with the ground is unlikely." These sections do not address the SAFER recommendations noted above that include providing for displacement of the tank without leakage, the use of flexible stretchable fuel lines, locating fuel tanks outside areas where penetration from displaced structural members is likely, and providing considerable clearance between the tank and surrounding structure to minimize tank damage. The FAA therefore considers that amendment of the regulations is needed to ensure that all new designs meet minimum crashworthiness standards.

Fuel Tank Crash Loads

Notice 89-11 also requested specific information regarding what standard should be used for establishing crash resistance of fuselage fuel tanks. Commenters generally agreed that Military Specification MIL-T-27422B, "Tank, Crash Rresistant, Aircraft," dated February 24, 1970, including Amendment 1, dated April 13, 1971, "Type II, non-self-sealing, Class A flexible cell construction," is a good starting point for the development of impact resistance criteria for transport category airplanes. However, this specification was developed for rotorcraft and small airplane fuel tanks that are exposed to distinctly different crash dynamics than transport category airplane fuel tanks. These commenters therefore recommended further study regarding the crash dynamics of large fuel tanks located in these types of airplanes.

Although the SAFER report indicated that crashworthy fuel tanks were not considered effective with respect to the wing fuel tanks of transport category airplanes, the FAA is conducting a research and development program with auxiliary fuselage-mounted fuel tanks to evaluate possible fuel containment design criteria and to determine whether new or revised structural design standards are necessary. To date, test results

show that fuselage-mounted fuel tanks that are installed utilizing the guidelines provided in Advisory Circular 25-8, "Auxiliary Fuel Systems Installations," resist rupture during typical impact survivable crash load conditions.

Since issuance of Notice 89-11, the FAA has requested assistance from the Aviation Regulation Advisory Committee (ARAC) to assist in determining what standard should be used for the dynamic load requirements for airplane fuel tanks. The committee~~commitee~~ is currently attempting to harmonize the FAR and Joint Airworthiness Requirements (JAR) and is developing a recommendation that, if accepted by the FAA, will be the subject of future rulemaking. Therefore, amendment of the fuel tank load requirements is not addressed in this notice.

Self Sealing Fittings–

Comments were also received regarding the merits of requiring the installation of self-sealing fittings in fuselage fuel lines and the engine fuel feed lines. One commenter stated that self-sealing fittings are currently in use in a number of fuselage-mounted auxiliary fuel tanks in McDonnell Douglas Model DC-9 and Model MD-80 airplanes and have provided satisfactory service experience. The commenter further stated that other methods of providing fuel system crashworthiness have been employed by other manufacturers and that mandating self-sealing fittings may unnecessarily inhibit airplane fuel system design. This commenter and four other commenters opposed or questioned installation of self-sealing fittings in the engine fuel lines due to possible inadvertent closure of the valves and unwanted loss of engine power. These commenters indicate that inadvertent closure of self-sealing fittings could result in a significant increase in non-restartable engine incidents and could result in loss of power from more than one engine. They further expressed a concern that requiring self-sealing fittings could result in an overall reduced level of safety. However, these commenters did not provide factual

data to substantiate that new technology self--sealing fittings would be exposed to high rates of inadvertent closure and therefore cause a significant reduction in airplane safety.

Other commenters referenced the satisfactory service experience of self-sealing fittings in military airplanes and fully supported the proposal to require installation of these fittings in fuel lines routed within or adjacent to the fuselage and at the engine to airframe connection point. Information provided by one commenter indicates that newer technology self-sealing fittings provide significantly improved reliability and are designed to preclude unwanted closure and will operate with a mean time between failure of 30,000 hours. Another commenter stated that self-sealing fittings have been in use for many years on military aircraft and reliability data is available from this source. This commenter also commented on the potential benefits of correctly installing practical crashworthy fuel systems. The commenter stated that "...since 1970 the U.S. Army has experienced approximately 3200 crashes of aircraft equipped with crashworthy fuel systems. As of the date of the comment, October 1989, only two individuals had died by fire in accidents which were otherwise survivable."

Flexible Stretchable Fuel Lines

Another fuel containment concept proposed in Notice 89-11 for which cost and benefit information was requested concerned a proposal to mandate the use of stretchable flexible fuel lines for all fuel lines routed within the fuselage contour. No specific comments regarding this proposal were received.

Discussion

Based on the comments received in response to Notice 89-11, the FAA proposes to amend the fuel system requirements of part 25 to minimize the potential for fuel spillage within or adjacent to the passenger compartment from fuel sources where it can be shown to be economically feasible, utilizing currently available technology. The FAA has determined that these sources include auxiliary fuel tanks located within the fuselage

contour and fuel lines routed outside the fuel tanks within or immediately adjacent to the passenger cabin. Examples of such fuel line routings include fuel lines routed above or below the passenger cabin floor, and fuel lines routed along the external fuselage skin within fairings. Fuel lines that are addressed include those lines that feed fuel to both essential systems, such as the engines and essential Auxiliary Power Units (APU's), and those that feed non essential systems, such as airplane center of gravity trim fuel tanks, and non essential APU's.

This notice of proposed rulemaking contains four proposals. The first, to add a new paragraph (i) to § 25.1189, would implement the SAFER committee recommendation to require closure of the airframe mounted engine fuel shutoff valve when either the normal or emergency engine shutdown procedure is carried out by the flightcrew. Currently, manufacturers of most transport category airplanes activate the airplane mounted fuel shutoff valve via the normal fuel shutoff levers. Therefore, this proposal is not expected to have a significant cost impact. As discussed earlier in this notice, the fuel feed shutoff provisions were originally proposed in Notice 84-17. No adverse comments were received to that proposal in response to Notice 84-17. Those provisions have now been incorporated in this rulemaking, which the FAA anticipates will more completely address the threat from fuel leakage following a survivable crash landing.

The second proposal would amend § 25.963(d) to add a requirement to locate fuel tanks that are within the fuselage contour~~require fuel tanks located within the fuselage contour to be in a protected location~~ so that exposure to penetration or damage due to fuselage deformation, fuselage separation, or displaced structural members (including the landing gear)~~, and scraping action with the ground~~ is unlikely. The intended compliance methods for these additional requirements would include analysis of the fuselage auxiliary fuel tank installation under impact survivable crash conditions that exceeded the

loads defined in § 25.561 (b) to show that the fuel tankage is not located where fuselage separation or damage from displaced structural members is likely to occur. In addition, an analysis would be required to show that damage to auxiliary fuel tanks did not occur due to fuselage deformation or crushing that would occur during the loading conditions defined in § 25.561(b). This proposal is consistent with guidance provided in FAA Advisory Circular (AC) 25-8, Auxiliary Fuel System Installations, for determining the degree of fuselage deformation or structural crush distance that should be available to avoid auxiliary fuel tank ground contact.

———This proposal would apply to fuel tanks and portions of fuel tanks located within the fuselage contour, such as those tanks located within the wing center section, vertical and horizontal stabilizer, and cargo compartment, and would mandate practices currently in use by most manufacturers for installation of auxiliary fuel tanks.

The third proposal would amend § 25.993 to add a new paragraph (g) to require ~~that fuel sources for~~ fuel lines routed outside the fuel tank walls to be shut off from the fuel supply during the takeoff and landing portions of flight, or to have automatic fuel shutoff capability during fuselage or engine separation. The use of self-sealing fittings would be one option available to the applicant to satisfy the proposed fuel shutoff requirement. Commenters should address the weight, cost, and safety benefits, including the effects on unwanted, non-restartable engine shutdown rates, of installing new technology self-sealing fittings .

The fourth proposal would revise § 25.993(f) to require that fuel lines routed outside the fuel tank walls, and within or adjacent to the fuselage, be designed and installed to resist rupture when the line is stretched and deformed by adjacent structure during fuselage separation. Fuel lines currently available and utilized by some manufacturers have demonstrated impact resistance during guillotine tests, with the line at critical operating presures and temperatures, that resulted in elongation of up to 30

percent of their original length without leakage. This level of impact resistance and elongation capability is considered by the FAA to meet the intent of this proposal. Specific methods of compliance with this requirement would ~~would~~ be described~~fined~~ in a new advisory circular developed for that purpose.

The proposal to amend § 25.993(f) to require minimum elongation and deformation requirements for fuselage fuel lines is based on service experience. Currently, § 25.993(f) requires "each fuel line within the fuselage to be designed and installed to allow a reasonable degree of deformation and stretching without leakage." Compliance with this rule does not require consideration of the degree of deformation and stretching that has occurred during separation of the fuselage and does not apply to fuel lines routed outside the fuselage adjacent to the passenger compartment (such as fuel lines routed through fairings). A review of the accident statistics developed by the National Transportation Safety Board, and contained within the SAFER report, for the period from 1969 to 1978 indicates that 14 out of 27 survivable transport airplane accidents resulted in major fuselage structural damage in which the airframe separated into three or more sections. In many of these accidents, the fuselage sections remained within close proximity to one another such that flexible fuel lines would reduce the likelihood of fuel leakage.

One accident in which damage to the fuel lines routed within the fuselage was considered to have contributed to the severity of the accident occurred~~occured~~ in November 1966 in Salt Lake City and involved a Boeing 727 airplane. In this accident, fuselage separation resulted in severing of the three main engine aluminum fuel lines and shrouds that were routed from the wing fuel tanks through the fuselage to the aft engine locations. Fuel from the failed lines, which was pumped into the fuselage area, was determined to be a contributing factor in the severity of the accident. The aircraft manufacturer incorporated new technology fuel lines into Model 727 airplanes

manufactured after 1966, and made retrofit of the lines available by service bulletin. Those fuel lines exhibit greatly improved elongation characteristics and have been shown by service experience to reduce fuel spillage. A review of available service history information from accidents where fuselage separation occurred on airplanes equipped with the new technology lines indicates greatly improved deformation and stretching capability is provided by the new lines.

One accident that clearly demonstrates the benefits of the new technology fuel lines occurred in 1975 at Stapleton International Airport in Denver, Colorado, where a Boeing 727 airplane equipped with the new fuel lines impacted the ground due to windshear. The NTSB accident report, NTSB-AAR-76-14, indicates that the fuselage separated into three pieces, resulting in elongation of the three main engine fuel lines. Due to damage to the engine controls and loss of electrical power, the engines could not be shut down and remained operating at a high power, governed only by the reduced fuel flow to the engine caused by elongation of the fuel lines. Shutdown of the engines could only be achieved when ground crews sprayed fire extinguishing foam into the engine inlets. No fatalities due to fuel fire resulted from this accident.

Notice 89-11 contained a four-part question requesting comments regarding what airplanes should be affected by a proposed regulatory standard requiring impact-resistant auxiliary fuselage fuel tanks and self-sealing fittings. Commenters indicated that the applicability of any new standard should be based on a cost benefit evaluation. All commenters agreed that the new standards should apply only to new airplanes for which the application for original type certification is made after the effective date of the amendment. Commenters generally did not support amendment of parts 121 and 135 to require all airplanes operated or manufactured after a specified date to meet the new standards, regardless of the date of application for type certification. The FAA agrees and

proposes that the new standards apply only to newly designed transport category airplanes.

Regulatory Evaluation

(To be provided by APO)

Federalism Implications

The regulations proposed herein would not have substantial direct effects on the States, on the relationship between the national government and the States, or on the distribution of power and responsibilities among the various levels of government. Therefore, in accordance with Executive Order 12612, it is determined that this proposal would not have sufficient federalism implications to warrant the preparation of a Federalism Assessment.

Paperwork Reduction Act

In accordance with the Paperwork Reduction Act of 1990 (44 U.S.C. 3501 et seq.), there are no reporting or recordkeeping requirements associated with this final rule.

Conclusion

Because the installation of fuel systems with improved crash resistance is not expected to result in a substantial economic cost, the FAA has determined that this proposed regulation is not significant under Executive Order 12866. However, the FAA considers this action to be significant as defined in Department of Transportation Regulatory Policies and Procedures (44 FR 11034, February 26, 1979), as it involves a matter on which there has been significant public interest. In addition, it has been determined under the criteria of the Regulatory Flexibility Act that this regulation, at promulgation, would not have a significant economic impact, positive or negative, on a substantial number of small entities, since none would be affected. A copy of the initial regulatory evaluation prepared for this proposal may be examined in the public docket or

obtained from the person identified under the caption, "FOR FURTHER INFORMATION CONTACT."

List of Subjects in 14 CFR part 25

Aircraft, Aviation safety, ~~Federal Aviation Administration,~~ Reporting and record-keeping requirements.

The Proposed Amendment

Accordingly, the Federal Aviation Administration proposes to amend 14 CFR part 25 of the Federal Aviation Regulations (FAR) as follows:

PART 25 - AIRWORTHINESS STANDARDS: TRANSPORT CATEGORY AIRPLANES.

1. The authority citation for part 25 continues to read as follows:

Authority: ~~49 U.S.C. app. 1344, 1354(a), 1355, 1421, 1423, 1424, 1425, 1428, 1429, 1430;~~ 49 U.S.C. 106(g)~~; and 49 CFR 1.47(a).~~, 40113, 44701, 44702, 44704.

2. Section 25.963 would be amended by revising paragraph (d) to read as follows:

§ 25.963 Fuel tanks: General

* * * * *

(d) Fuel tanks within the fuselage contour must be able to resist leakage and to retain fuel, under the inertia forces prescribed for the emergency landing conditions of § 25.561. In addition, these tanks must be located in a protected position so that exposure to penetration or damage due to fuselage deformation, fuselage separation, displaced structural members (including the landing gear), and scraping action with the ground is unlikely.

3. Section 25.993 would be amended by revising paragraph (f) and by adding a new paragraph (g) to read as follows:

§ 25.993 Fuel system lines and fittings.

* * * * *

(f) Each fuel line routed outside the fuel tank walls, and within or adjacent to the fuselage, must be designed and installed to resist leakage when the line is stretched and deformed by adjacent structure during fuselage separation. This capability must be shown with the fuel line at the environmental and operating conditions determined to be critical.

(g) Each fuel line that is routed outside the fuel tank walls must provide a means to either;

(1) shut off the supply of fuel during takeoff and landing, or

(2) have an automatic means to shut off the fuel supply during fuselage or engine separation.

* * * * *

4. Section 25.1189 would be amended by adding a new paragraph (i) to read as follows:

§ 25.1189 Shutoff means

* * * * *

(i) The airframe-mounted engine and auxiliary power unit (APU) fuel shutoff valves must isolate the airplane fuel supply from the engine and APU during both the normal and emergency shutdown sequence.

Issued in Washington, D.C. on

f:\home\mdostert\arac\nprms\fuel54.doc
10/21/93:revised by ps/ns/md10/27/93:ps/md1/19/94:copy sent via cc:mail to APO (Won) for review, at request of Ward Keech
3/17/94:revised per MED
10/21/94:revised per Doug's comments
7/28/95:ps:editorial review
8/2/95:ps:editorial changes accepted
9/27/95: revised per Doug's comments
11/7/95:editorial review of previous version

APPENDIX C—FUEL SYSTEM DESIGN CHECKLIST

FUEL SYSTEM DESIGN CHECKLIST

The following fuel system design checklist is Section 6.9 of Chapter 6, Volume I of the U.S. Army Aircraft Crash Survival Design Guide, USAAVSCOM TR 89-0-22A, Dec 1989.

6.9 DESIGN CHECKLISTS

6.9.1 Fuel System Design Checklist

6.9.1.1 Fuel Tanks

1. Are the fuel tanks located as far as possible from anticipated impact areas, occupiable areas, large weight masses, and primary ignition sources?

2. Are the fuel tanks located as high up in the structure as possible?

3. Are the fuel tanks located where there is not danger of puncture by a collapsing landing gear?

4. Are the fuel tanks located so that transmissions, engines, and similar massive components will not crush the tanks during a crash?

5. Are the fuel tanks relatively safe from penetrative damage by structural stringers and stiffeners?

6. Can each fuel tank displace in the airframe structure without tearing or inducing leaks around the filler area, the fuel line entry and exit, the quantity indicator, and the tank-to-structure attachment points?

7. Do the fuel tanks have smooth, regular shapes, with the sump gradually contoured into the tank bottom?

8. Do all fuel tank concave corners have a minimum radius of 3 in., and all convex corners a minimum radius of 1 in.?

9. Do all fuel tanks meet or exceed the requirements of MIL-T-27422B?

10. Do all fuel tank fittings meet or exceed the tank pullout strength specified in MIL-T-27422B?

6.9.1.2 Fuel Lines

11. Are all fuel lines made from flexible hose with a steel-braided outer sheath?

12. Do all hose assemblies meet the strength requirements listed in Table 17, Section 6.2.3.1 of the Crash Survival Design Guide (last page of this checklist)?

13. Can all hoses elongate 20% without the hose assemblies spilling fuel?

14. Do fuel lines exit the fuel tank in one protected location?

15. Has the number of fuel lines in the engine compartment been kept to a minimum?

16. Are fuel lines routed along heavier structural members wherever possible?

17. Is as much of the fuel line as possible routed through the fuel tanks?

18. Are fuel lines routed as far as possible from occupiable areas and electrical compartments?

19. Are fuel lines routed as far as possible from all electrical equipment and wires?

20. Are fuel lines routed away from areas where large structural damage is likely during a crash?

21. Are fuel lines routed away from the exhaust system and high-temperature heating ducts?

22. Are the fuel system lines designed with as few fittings as possible?

23. Are the fuel system lines designed so that uncut hoses are run through bulkheads rather than attached to the bulkheads with fittings?

24. Are self-sealing breakaway valves used wherever a fuel line goes through a firewall or bulkhead or is attached to the bulkhead?

25. Are lines entering and exiting in-line boost pumps made of flexible hose that is approximately 20% longer than necessary?

26. If fuel lines are not longer than necessary for in-line boost pumps, are self-sealing breakaway valves used in the lines near the boost pump?

27. Are self-sealing breakaway valves used at all points in the fuel lines where aircraft structural deformation could lead to line failure?

28. Are fuel line supports frangible to ensure release of the line from the structure during crash impact?

29. Will the frangible supports meet all operational and service loads of the aircraft?

30. Are all continuous lines running through bulkheads stabilized by frangible panels?

6.9.1.3 Frangible Attachments

31. Are frangible attachments used at all attachment points between the fuel tanks and aircraft structure?

32. Do the specified frangible tank attachment separation loads exceed all operational and service loads by a satisfactory margin?

33. Are the specified frangible attachment separation loads between 25% and 50% of the loads required to fail the attached system or components?

34. Will the frangible attachments separate whenever the required loads are applied in all possible modes likely to occur during crash impacts?

6.9.1.4 Self-Sealing Breakaway Valves

35. Are breakaway valves installed in all fuel-tank-to-fuel-line connections, tank-to-tank interconnects, and at other points in the fuel system where aircraft structural deformation could lead to system failure?

36. Are the shapes of the breakaway valves remaining in the fuel tank basically smooth?

37. Are the breakaway valves recessed into the tank wall so that the tank half does not protrude outside the tank wall more than ½ inch after valve separation?

38. Do the specified breakaway valve separation loads exceed all operational and service loads of the aircraft?

39. Are the specified breakaway valve separation loads between 25% and 50% of the loads required to fail the attached components or lines?

40. Are the breakaway valves required to separate whenever the required loads are applied in the modes most likely to occur during crash impacts?

6.9.1.5 Fuel Drains

41. Are all fuel line drain valves stabilized where necessary with frangible attachments?

42. Are all structural attachments of fuel tank drains made with frangible attachments?

43. Are all fuel tank drains recessed into the tank so that no part of the drain protrudes outside the tank wall?

6.9.1.6 Filler Units

44. Are filler units attached to the aircraft structure with frangible attachments?

45. Are filler caps recessed into the fuel tank wall?

46. Are long filler necks avoided?

47. If filler necks are used, are they made from frangible materials and designed so that the filler cap stays with the tank after filler neck separation?

6.9.1.7 Boost Pumps

48. Can an engine-mounted, engine-driven boost pump be used in the aircraft?

49. If an engine-mounted suction system cannot be used, can an air-driven boost pump be used?

50. Do in-line boost pumps have a structural attachment capable of withstanding a 30-G load applied in any direction?

51. Are tank-mounted boost pumps fastened to the structure with frangible attachments?

6.9.1.8 Fuel Filters and Strainers

52. Are fuel filters and strainers mounted outside the engine compartment wherever possible?

53. Do all strainers and filters have a structural attachment capable of withstanding a 30-G load applied in any direction?

54. Do all strainers and filters retain as small a quantity of fuel as possible?

6.9.1.9 Fuel Valves

55. Has the number of fuel valves been kept to the minimum required for operation?

56. Are self-sealing breakaway valves used at all valve-to-fuel-line connections where crash-induced line failure is likely?

57. Are all small in-line valves fastened to the structure with frangible attachments?

58. Do large valves have a structural attachment capable of withstanding 30-G loads in any direction?

59. Are fuel shut-off valves located outside the engine compartment, either on the outside face of the firewall or at the fuel tank outlets?

6.9.1.10 Fuel Quantity Indicators

60. Can float-type quantity indicators be used in this fuel system?

61. If probe-type indicators are used, are they fabricated from material that either is frangible or possesses as low a flexural rigidity as possible?

62. Is a slightly rounded shoe incorporated at the probe bottom end of all probe-type indicators, or is the probe mounted at an angle toward the rear of the aircraft?

63. Are frangible attachments used where it is necessary to stabilize the indicator by fastening it to the structure?

6.9.1.11 Vent Systems

64. Are high-strength fittings used between the metal insert in the tank and the vent line?

65. If vent outlets must be supported, are they supported by frangible attachments to the structure?

66. Is the vent line made of wire-covered flexible hose?

67. Is the vent line routed so that it cannot be snagged in displacing structure during a crash?

68. Is a self-sealing breakaway valve used at the tank-to-line attachment if there is danger of the tank being torn free of the supporting structure?

69. Are vent lines routed inside the fuel tank in such a manner that spillage cannot continue after a rollover accident?

70. If an antispillage vent valve is used inside the tank in lieu of the above items, will the valve remain fully open during all normal flight conditions?

71. Will the vent valve close in the extreme attitudes that will occur during a rollover?

72. Will the vent valve possess adequate venting cap ability under critical icing conditions in flight?

73. If the fuel system is to be pressure refueled, is a bypass system provided in case of tank overpressurization?

74. Is any spillage due to tank overpressurization released away from aircraft occupants and ignition sources?

6.9.2 Oil and Hydraulic System Design Checklist

6.9.2.1 Oil Tanks and Hydraulic Reservoirs

1. Are the tanks and reservoirs located as far as possible from anticipated impact areas, occupiable areas, large weight masses, and primary ignition sources?

2. Are the tanks and reservoirs located as high up in the structure as possible?

3. Are the tanks and reservoirs located where there is no danger of puncture from a collapsing landing gear?

4. Are the tanks and reservoirs located where transmissions, engines, and similar massive components will not crush them during a crash?

5 Are the tanks and reservoirs relatively safe from penetrative damage by structural stringers and stiffeners?

6. Can the oil tanks displace in the airframe structure and still not leak around the filler area, the fluid line entry and exit, the quantity indicator, and the tank-to-structure attachment points?

7. Are the hydraulic reservoirs constructed and mounted to withstand 30-G forces applied in any direction?

6.9.2.2 Oil and Hydraulic Lines

8. Are all oil and hydraulic lines made from flexible hose with a steel-braided outer sheath wherever possible?

9. Do all hose assemblies meet the strength requirements listed in Table 17, Section 6.2.3.1 of the Crash Survival Design Guide (last page of this checklist)?

10. Can all hoses elongate 20% without the hose assemblies spilling fluid?

11. Is coiled metal tubing used in areas where flexible hose cannot be used, but large structural deformations are expected?

12. Has the number of fluid lines in the engine compartment been held to a minimum?

13. Are fluid lines routed along heavier structural members wherever possible?

14. Are fluid lines routed as far as possible from occupiable areas and electrical compartments?

15. Are fluid lines routed as far as possible from all electrical equipment and wires?

16. Are fluid lines routed away from areas where large structural damage is likely during a crash?

17 Are fluid lines routed away from the exhaust system and high-temperature heating ducts?

18. Are the fluid system lines designed with as few fittings as possible?

19. Are the fluid system lines designed so that continuous hoses are run through bulkheads rather than attached to the bulkheads with fittings?

20. Are self-sealing breakaway valves used wherever a fluid line goes through a firewall or a bulkhead or is attached to the bulkhead?

21. Are self-sealing breakaway valves used at all points in the fluid lines where aircraft structural deformation could lead to line failure?

22. Are fluid line supports frangible to ensure release of the line during crash impact?

23. Are uncut lines running through bulkheads stabilized by frangible panels?

6.9.2.3 Oil and Hydraulic System Components

24. Are all oil and hydraulic system components located as far as possible from anticipated impact areas, occupiable areas, and electrical compartments?

25. Are the components located in the engine compartment restricted to those absolutely necessary for engine operation?

26. Can the construction and mounting of all system components withstand 30-G forces applied in any direction without leakage?

6.9.2.4 Oil Coolers

27. Is the oil cooler located outside of the engine compartment?

28. Is the oil cooler located as far as possible from anticipated impact areas, occupiable areas, and other potentially injurious components?

29. Can the oil cooler and connecting lines experience considerable deformation without leaking?

30. Can the oil cooler mounting withstand 30-G forces applied in any direction?

6.9.3 Ignition Source Control Checklist

6.9.3.1 Electrical Systems

1. Are wires routed as high up in the structure as possible?

2. Are wires routed away from areas of anticipated structural damage, i.e., landing gear failure, nose crush-in, etc.?

3. Are wires routed above or away from flammable fluid lines?

4. Are all wires routed through the structure so that extensive structural collapse or displacement can take place without breaking wiring?

5. Are wire bundles supported at frequent intervals by frangible attachments to the aircraft structure?

6. Are wires shielded by felt or similar protective covers in areas where crushing is likely?

7. Are wires to electrically operated boost pumps 20% to 30% longer than necessary?

8. Is all electrical wiring going through the fuel tank compartments shrouded?

9. Is wiring in the fuel tank compartment routed as high as possible in the compartment?

10. Are electrical wires in the fuel tank compartment 20% to 30% longer than necessary?

11. Are batteries, generators, and inverters located in areas relatively free from structural collapse?

12. Are batteries, generators, and inverters located as far as possible from flammable fluids?

13. Are batteries and generators (unless engine mounted) housed in compartments built into the airframe?

14. Are battery, inverter, and generator mountings capable of withstanding a 30-G force applied in any direction?

15. Are the wires connecting the generator, battery, and inverter into the system located in relatively crush-free areas?

16. Are light bulbs and attaching wires on lower airframe surfaces designed to readily displace, rather than remain stationary and be broken?

17. Are all electrical compartments lined with a tough, nonconductive paneling?

6.9.3.2 Shielding

18. Are fuel tanks isolated from the occupants by a minimum of two spillage barriers?

19. Are firewalls designed to withstand all survivable crash impacts without losing their structural integrity or sealing ability?

20. Are drainage holes located in all flammable fluid tank compartments?

21. Is the hot metal of the engine shielded from flammable fluid spillages?

6.9.4 Interior Materials Selection Checklist

1. Do all interior materials meet the flammability requirements specified in the current Federal Air Regulation?

2. Do all interior materials produce the lowest possible amount of smoke and toxic gases as specified in the current Federal Air Regulations?