DOT/FAA/AR-07/32

Air Traffic Organization
Operations Planning
Office of Aviation Research
and Development
Washington, DC 20591

Teardown Evaluation of a 1979 Cessna 402C Model Airplane

May 2007

Final Report

This document is available to the U.S. public through the National Technical Information Service (NTIS), Springfield, Virginia 22161.

U.S. Department of Transportation
Federal Aviation Administration

NOTICE

This document is disseminated under the sponsorship of the U.S. Department of Transportation in the interest of information exchange. The United States Government assumes no liability for the contents or use thereof. The United States Government does not endorse products or manufacturers. Trade or manufacturer's names appear herein solely because they are considered essential to the objective of this report. This document does not constitute FAA certification policy. Consult your local FAA aircraft certification office as to its use.

This report is available at the Federal Aviation Administration William J. Hughes Technical Center's Full-Text Technical Reports page: actlibrary.tc.faa.gov in Adobe Acrobat portable document format (PDF).

Technical Report Documentation Page

1. Report No.	2. Government Accession No.	3. Recipient's Catalog No.
DOT/FAA/AR-07/32		

4. Title and Subtitle	5. Report Date
TEARDOWN EVALUATION OF A 1979 CESSNA 402C MODEL AIRPLANE	May 2007
	6. Performing Organization Code
7. Author(s) Melinda Laubach and Dale Cope	8. Performing Organization Report No.
9. Performing Organization Name and Address National Institute for Aviation Research Wichita State University 1845 Fairmont Wichita, Kansas 67260	10. Work Unit No. (TRAIS)
	11. Contract or Grant No. 01-C-AW-WISU
12. Sponsoring Agency Name and Address U.S. Department of Transportation Federal Aviation Administration Air Traffic Organization Operations Planning Office of Aviation Research and Development Washington, DC 20591	13. Type of Report and Period Covered Final Report
	14. Sponsoring Agency Code ACE-110

15. Supplementary Notes

The Federal Aviation Administration Airport and Aircraft Safety R&D Division Technical Monitor was Michael Shiao.

16. Abstract

The Federal Aviation Administration established a research program to conduct a destructive evaluation of two aged airplanes (both Cessna 402 models) used in commuter service. The intent of the program was to provide insight into the condition of a typical aged airplane by determining if a correlation exists between the airplane's maintenance history and current condition from a safety of flight perspective. This document supports this research program by providing the findings of a teardown evaluation of a 1979 Cessna 402C model airplane. The results in this report will provide information for use in future investigations into the aged small airplane fleet and help determine if additional research is required to address any problems observed.

The destructive evaluation of the commuter-class airplane was separated into three main tasks: (1) inspection of the airframe and airplane systems, (2) teardown examination of the airframe and airplane systems, and (3) assessment of the airplane wiring. During the inspection phase, three subtasks were performed: a survey of the airplane maintenance records, visual inspection of the airframe and airplane systems, and supplemental airframe inspections. The teardown examination involved disassembling the airframe and major airplane sections, inspecting airplane systems' components, inspecting the primary structure using alternative nondestructive inspection techniques, and performing a microscopic examination of critical structural areas. As part of the destructive evaluation, inspections and testing were also performed on airplane wiring to assess the condition and degradation of electrical wiring in small airplanes and to evaluate maintenance procedures. Specific observations are made regarding the findings discovered during the teardown evaluation on the particular airplane selected.

17. Key Words	18. Distribution Statement
Aging airplane, Teardown evaluation, Structural integrity, Airworthiness, Cracks, Corrosion, Airplane Systems, Wiring	This document is available to the public through the National Technical Information Service (NTIS), Springfield, Virginia 22161.

19. Security Classif. (of this report)	20. Security Classif. (of this page)	21. No. of Pages	22. Price
Unclassified	Unclassified	253	

Form DOT F1700.7 (8-72) Reproduction of completed page authorized

TABLE OF CONTENTS

		Page
EXECUTIVE SUMMARY		xxiii
1.	INTRODUCTION	1-1
1.1	Background	1-1
1.2	Research Objectives	1-2
1.3	Technical Approach	1-3
1.3.1	Airplane Selection	1-3
1.3.2	Inspection Phase	1-3
1.3.3	Teardown Examination Phase	1-4
1.3.4	Airplane Wiring Assessment	1-4
2.	INSPECTION PHASE	2-1
2.1	Survey of Airplane Maintenance Records	2-1
2.2	Service Difficulty Reports Database Review	2-5
2.3	Visual Inspections of Airframe and Airplane Systems	2-6
2.3.1	Operational Checks	2-6
2.3.2	System Inspections	2-6
2.3.3	Airframe Inspections	2-10
2.4	Supplemental Inspections	2-13
2.4.1	Visual Supplemental Inspection Results	2-16
2.4.2	Fluorescent Liquid Penetrant Supplemental Inspection Results	2-19
2.4.3	Magnetic Particle Supplemental Inspection Results	2-20
2.4.4	Eddy-Current Supplemental Inspection Results	2-21
2.4.5	Ultrasonic Supplemental Inspection Results	2-30
3.	TEARDOWN EXAMINATION PHASE	3-1
3.1	Disassembly of Airplane Into Major Airplane Sections	3-1
3.2	Inspection of Systems' Components	3-1
3.3	Structural Assessment Using Alternative NDI Techniques	3-6
3.3.1	Left Wing Results	3-9
3.3.2	Right Wing Results	3-13
3.3.3	Fuselage Channel Results	3-18
3.3.4	Horizontal Stabilizer Results	3-19
3.3.5	Vertical Stabilizer Results	3-21
3.4	Detailed Disassembly of Major Airplane Sections	3-23

3.5 Microscopic Examination 3-36

3.5.1 Microscopic Examination of Visual Inspection Areas 3-39

3.5.2 Microscopic Examination of Supplemental Inspection Areas 3-39

3.5.3 Microscopic Examination of Areas Inspected With Alternative NDI 3-55

3.5.4 Microscopic Examinations of Defects Found During Disassembly 3-87

3.5.5 Microscopic Examination of Critical Structural Areas 3-105

3.5.6 Summary of Microscopic Examination Findings 3-106

3.5.7 Correlation Between Alternative NDI Indications and Microscopic Examination Findings 3-123

4. AIRPLANE WIRING ASSESSMENT OF CESSNA 402C 4-1

4.1 Nondestructive Inspection and Testing 4-1

4.1.1 General Visual Inspection 4-1
4.1.2 In Situ Wiring Tests 4-34
4.1.3 Laboratory Tests 4-36

4.2 Destructive Laboratory Wiring Tests 4-51

4.2.1 Wet DWV Test 4-52
4.2.2 Mandrel Bend/Wrap Back Test 4-54

5. SUMMARY 5-1

5.1 Summary of Inspection Phase 5-1

5.1.1 Maintenance Record Review 5-1
5.1.2 Visual Inspections 5-2
5.1.3 Supplemental Inspections 5-2

5.2 Summary of Teardown Examination Phase 5-3

5.2.1 Inspection of Systems' Components 5-3
5.2.2 Structural Assessment Using Alternative NDI Techniques 5-4
5.2.3 Microscopic Examination 5-4

5.3 Summary of Wiring Assessment 5-5

5.3.1 Nondestructive Inspection and Testing 5-5
5.3.2 Destructive Testing 5-6

6. REFERENCES 6-1

LIST OF FIGURES

Figure		Page
1-1	1979 Cessna 402C, Tail Number N780EA	1-3
2-1	Results of the SDR Database Review by Airplane Section	2-5
2-2	Airplane Systems Inspection	2-8
2-3	Static Leak in the Hydraulic Flow Pressure Switch	2-9
2-4	Welded Plate Fixed to the Right-Hand Exhaust Pipe	2-9
2-5	Airframe Visual Inspections	2-10
2-6	Antenna Location on the Vertical Stabilizer	2-12
2-7	Corrosion Under the Vertical Stabilizer Antenna	2-12
2-8	Visual Inspection Findings by Type	2-13
2-9	Visual Inspection Findings by Airplane Location	2-13
2-10	Location of the Stub Wing Spar Attachment Fittings	2-17
2-11	Corrosion on the Stub Wing Spar Attachment Fittings	2-18
2-12	Damage Induced on the Stub Wing Attachment Fittings During Removal	2-18
2-13	Penetrant Inspection Process	2-19
2-14	Location of Crack on the Bracket Supporting the Left Inboard Elevator Attach Fitting	2-20
2-15	Crack in the Bracket Supporting the Left Inboard Elevator Attach Fitting	2-20
2-16	Surface Crack Indications	2-21
2-17	Eddy-Current Probe	2-21
2-18	Location of Cracked Flange on the Right Wing Outboard Engine Beam	2-23
2-19	Crack on the Right Wing Outboard Engine Beam	2-23
2-20	Center Area of the Horizontal Stabilizer Front Spar Upper Cap	2-24
2-21	A 0.0625-Inch Skin Crack on the Horizontal Stabilizer Center Upper Skin	2-24

2-22	A 0.031-Inch Skin Crack on the Horizontal Stabilizer Center Upper Skin	2-25
2-23	Location of Out-of-Round Hole on the Horizontal Stabilizer Front Spar Web	2-25
2-24	Out-of-Round Hole on the Horizontal Stabilizer Front Spar Web	2-26
2-25	Location of Defect in the Horizontal Stabilizer Center Skin	2-26
2-26	Skin Crack in the Fastener Hole Chamfer	2-27
2-27	Inspection Area of Wing Attach Fitting Boltholes	2-27
2-28	Cracked and Shorn Boltholes	2-28
2-29	Crack in the Angle Common to the Right Stub Wing Rib and Carry-Through Structure	2-28
2-30	Location of Crack Indications on the Left Wing Lower Front Spar Cap	2-28
2-31	Skin Cracks on the Skin Covering on the Left Wing Lower Front Spar Cap	2-29
2-32	Location of Crack Indications in the Left Wing Lower Aft Auxiliary Spar Cap	2-29
2-33	Inspection Areas for SID 57-10-21	2-30
3-1	Apparatus Used to Pressurize Lines	3-2
3-2	Cork Placed in the End of a Tube	3-3
3-3	Pressurization of Tubing	3-3
3-4	Vent Line 35-20-00 #107 Severed in Airplane	3-4
3-5	Vent Line 35-20-00 #85 Found Cracked During Visual Inspection	3-4
3-6	Vent Line 35-20-00 #75 Found With Pitting	3-5
3-7	Vent Line 35-10-00 #76 Corroded	3-5
3-8	Vent Line 35-20-00 #103 Cracked	3-5
3-9	Vent Line 35-20-00 #81 Found With Corrosion	3-6
3-10	Demonstration of the MOI Instrument	3-7
3-11	Demonstration of the 1- to 100-kHz Sliding Probe	3-7
3-12	Demonstration of the Spot Probe	3-8
3-13	Key for All NDI Location Figures	3-8

3-14	Location of Alternative NDI Indications on the Left Wing Lower Surface	3-10
3-15	Location of the Alternative NDI Indications on the Left Wing Upper Surface	3-11
3-16	Location of Cracks in Left Wing Engine Beam	3-11
3-17	Left Wing Engine Beam Cracks 1 and 2	3-12
3-18	Left Wing Engine Beam Cracks 3 and 4	3-12
3-19	Location of Alternative NDI Indications on the Right Wing Lower Surface	3-14
3-20	Location of Alternative NDI Indications on the Right Wing Upper Surface	3-15
3-21	Location of Cracks on the Right Wing Engine Beam	3-15
3-22	Right Wing Engine Beam Cracks 5 and 6	3-16
3-23	Right Wing Engine Beam Crack 7	3-16
3-24	Right Wing Engine Beam Crack 8	3-17
3-25	Location of Alternative NDI Indications on the Left Fuselage Channel	3-19
3-26	Location of Alternative NDI Indications on the Right Fuselage Channel	3-19
3-27	Location of Alternative NDI Indications on the Horizontal Stabilizer Upper Surface	3-20
3-28	Location of Alternative NDI Indications on the Horizontal Stabilizer Lower Surface	3-21
3-29	Location of Alternative NDI Indications on the Vertical Stabilizer Left Side	3-22
3-30	Location of Alternative NDI Indications on the Vertical Stabilizer Right Side	3-22
3-31	Critical Structural Details on the Wings	3-26
3-32	Critical Structural Details on the Stub Wings	3-26
3-33	Critical Structural Details on the Fuselage	3-26
3-34	Critical Structural Details on the Horizontal Stabilizer	3-27
3-35	Critical Structural Details on the Vertical Stabilizer	3-27
3-36	Illustrated Parts Breakout of the Engine Beam Structure	3-28
3-37	Location of Cracks on the Right Wing Engine Beams	3-29

3-38	Cracked Right Wing Inboard Engine Beam	3-30
3-39	Cracked Outboard Flange of the Right Wing Inboard Engine Beam	3-30
3-40	Cracked Inboard Top Surface of the Right Wing Outboard Engine Beam	3-31
3-41	Cracked Angle Bracket of the Right Wing Outboard Engine Beam	3-31
3-42	Wear on the Right Wing Front Spar Lower Cap	3-32
3-43	Location of Crack on the Left Wing Outboard Engine Beam	3-32
3-44	Crack on the Channel of the Left Outboard Engine Beam	3-33
3-45	Wing Carry-Through Structure	3-34
3-46	Crack in the Aft Carry-Through Forward Web	3-34
3-47	Cracks in the Forward Carry-Through Forward Web	3-35
3-48	Cracks in the Forward Carry-Through Aft Web	3-35
3-49	A 10-Power Magnifying Glass	3-36
3-50	Microscopic Examination of Parts Using the 7-45 Power Optical Microscope	3-37
3-51	Corrosion Depth Assessment With Digital Optical Micrometer	3-37
3-52	Pin Gage for Corrosion Depth Assessment	3-38
3-53	Specimens Mounted for Further Investigation	3-38
3-54	Area of Corrosion on the Vertical Stabilizer Skin Under an Antenna	3-39
3-55	Location of Stub Wing Forward Attach Fittings	3-41
3-56	Location of Stub Wing Aft Attach Fittings	3-41
3-57	Area of Corrosion on the Right Stub Wing Forward Lower Attach Fitting	3-42
3-58	Area of Corrosion on the Right Stub Wing Forward Upper Attach Fitting	3-42
3-59	Area of Corrosion on the Right Stub Wing Aft Lower Attach Fitting	3-43
3-60	Area of Corrosion on the Right Stub Wing Aft Upper Attach Fitting	3-43
3-61	Area of Corrosion on the Left Stub Wing Forward Lower Attach Fitting	3-44
3-62	Area of Corrosion on the Left Stub Wing Forward Upper Attach Fitting	3-44

3-63	Area of Corrosion on the Left Stub Wing Aft Lower Attach Fitting	3-45
3-64	Location of Wing Forward Attach Fittings	3-45
3-65	Location of Wing Aft Attach Fittings	3-46
3-66	Area of Corrosion on the Right Wing Forward Lower Attach Fitting	3-46
3-67	Area of Corrosion on the Right Wing Forward Upper Attach Fitting	3-47
3-68	Area of Corrosion on the Right Wing Aft Lower Attach Fitting	3-47
3-69	Area of Corrosion on the Right Wing Aft Upper Attach Fitting	3-48
3-70	Area of Corrosion on the Left Wing Forward Lower Attach Fitting	3-49
3-71	Area of Corrosion on the Left Wing Forward Upper Attach Fitting	3-49
3-72	Area of Corrosion on the Left Wing Aft Lower Attach Fitting	3-50
3-73	Area of Corrosion on the Left Wing Aft Upper Attach Fitting	3-50
3-74	Location of Right Stub Wing Bracket	3-51
3-75	Crack in the Right Stub Wing Bracket	3-51
3-76	Fractograph of Crack in the Right Stub Wing Bracket	3-52
3-77	Location of Cracks on the Left Inboard Elevator Attach Fitting Brackets	3-52
3-78	Left Inboard Elevator Attach Fitting Bracket With Crack	3-53
3-79	Crack on the Left Inboard Elevator Attach Fitting Bracket	3-53
3-80	Location of Crack on the Left Wing Engine Structure	3-54
3-81	Crack in the Angle Attachment	3-54
3-82	Location of Left Wing Front Spar	3-55
3-83	Area of Corrosion on the Left Wing Front Spar Lower Cap	3-56
3-84	Area of Corrosion on the Left Wing Front Spar Upper Cap	3-56
3-85	Location of Left Wing Rear Spar	3-57
3-86	Area of Corrosion on the Left Wing Rear Spar Lower Cap, View 1	3-57
3-87	Area of Corrosion on the Left Wing Rear Spar Lower Cap, View 2	3-58

3-88	Area of Corrosion on the Left Wing Rear Spar Lower Cap, View 3	3-58
3-89	Area of Corrosion on the Left Wing Rear Spar Upper Cap, View 1	3-59
3-90	Area of Corrosion on the Left Wing Rear Spar Upper Cap, View 2	3-59
3-91	Fatigue Crack on Vertical Support on the Left Wing Rear Spar at WS 69	3-60
3-92	Location of Left Wing Aft Auxiliary Spar	3-60
3-93	Fatigue Crack on the Left Wing Aft Auxiliary Spar Upper Cap at WS 113	3-61
3-94	Area of Corrosion on the Left Wing Aft Auxiliary Spar Lower Cap	3-61
3-95	Area of Corrosion on the Left Wing Aft Auxiliary Spar Web	3-62
3-96	Location of Left Wing Landing Gear Actuator Attach Fitting	3-62
3-97	Area of Corrosion on the Left Wing Landing Gear Actuator Attach Fitting	3-63
3-98	Location of Left Wing Forward Auxiliary Spar Landing Gear Attach Fitting	3-63
3-99	Area of Corrosion on the Left Wing Forward Auxiliary Spar Landing Gear Attach Fitting	3-64
3-100	Location of Right Wing Front Spar	3-65
3-101	Wear Caused by Chafing of Engine Beam	3-65
3-102	Area of Corrosion on the Right Wing Front Spar Lower Cap, View 1	3-66
3-103	Area of Corrosion on the Right Wing Front Spar Lower Cap, View 2	3-66
3-104	Area of Corrosion on the Right Wing Front Spar Upper Cap, View 1	3-67
3-105	Area of Corrosion on the Right Wing Front Spar Upper Cap, View 2	3-67
3-106	Area of Corrosion on the Right Wing Front Spar Web	3-68
3-107	Location of Right Wing Rear Spar	3-68
3-108	Area of Corrosion on the Right Wing Rear Spar Lower Cap	3-69
3-109	Area of Corrosion on the Right Wing Rear Spar Upper Cap, View 1	3-69
3-110	Area of Corrosion on the Right Wing Rear Spar Upper Cap, View 2	3-70
3-111	Location of Right Wing Aft Auxiliary Spar	3-70
3-112	Two Cracks on the Right Wing Aft Auxiliary Spar Lower Cap	3-71

3-113 Area of Corrosion on the Right Wing Aft Auxiliary Spar Upper Cap 3-71

3-114 Area of Corrosion on the Right Wing Aft Auxiliary Spar Web 3-72

3-115 Location of Right Wing Forward Auxiliary Spar 3-72

3-116 Crack A on the Right Wing Forward Auxiliary Spar Lower Cap 3-73

3-117 Crack B on the Right Wing Forward Auxiliary Spar Lower Cap 3-73

3-118 Area of Corrosion on the Right Wing Forward Auxiliary Spar Upper Cap 3-74

3-119 Location of Right Wing Aft Auxiliary Spar Landing Gear Attachment 3-74

3-120 Area of Corrosion on the Right Wing Aft Auxiliary Spar Landing Gear Attach Fitting 3-75

3-121 Location of Right Wing Forward Auxiliary Spar Landing Gear Attach Fitting 3-75

3-122 Area of Corrosion on the Right Wing Forward Auxiliary Spar Landing Gear Attach Fitting 3-76

3-123 Location of Right Wing Landing Gear Actuator Attach Fitting 3-76

3-124 Area of Corrosion on the Right Wing Landing Gear Actuator Attach Fitting 3-77

3-125 Location of Fuselage Channels 3-77

3-126 Area of Corrosion on the Right Fuselage Channel 3-78

3-127 Location of Horizontal Stabilizer Front Spar 3-79

3-128 Area of Corrosion on the Horizontal Stabilizer Front Spar Upper Cap 3-79

3-129 Area of Corrosion on the Horizontal Stabilizer Front Spar Lower Cap 3-80

3-130 Location of Horizontal Stabilizer Rear Spar 3-80

3-131 Area of Corrosion on the Horizontal Stabilizer Rear Spar Upper Cap 3-81

3-132 Area of Wear and Corrosion on the Horizontal Stabilizer Rear Spar Web 3-81

3-133 Area of Corrosion on the Horizontal Stabilizer Rear Spar Web 3-82

3-134 Area of Corrosion on the Horizontal Stabilizer Rear Spar Lower Cap 3-82

3-135 Location of Vertical Stabilizer Front Spar 3-83

3-136 Area of Corrosion on the Vertical Stabilizer Front Spar Left Cap 3-84

3-137 Area of Corrosion on the Vertical Stabilizer Front Spar Right Cap 3-84

3-138 Location of Vertical Stabilizer Rear Spar 3-85

3-139 Area of Corrosion on the Vertical Stabilizer Rear Spar Right Cap 3-86

3-140 Area of Corrosion on the Vertical Stabilizer Rear Spar Left Cap 3-86

3-141 Location of Left Stub Wing Rib 3-87

3-142 Cracks on the Left Stub Wing Rib 3-87

3-143 Location of Aft Carry-Through Structure Aft and Forward Webs 3-88

3-144 Crack in the Aft Web Carry-Through 3-89

3-145 Crack in the Aft Carry-Through Forward Web 3-89

3-146 Area of Corrosion in the Aft Carry-Through Forward Web 3-90

3-147 Location of Forward Carry-Through Structure Aft and Forward Webs 3-90

3-148 Cracks in the Forward Carry-Through Aft Web 3-91

3-149 Crack in the Forward Carry-Through Forward Web 3-91

3-150 Location of Forward Carry-Through Beams 3-92

3-151 Area of Corrosion on the Lower Forward Carry-Through Beam 3-92

3-152 Area of Corrosion on the Upper Forward Carry-Through Beam 3-93

3-153 Location of Aft Carry-Through Beam 3-93

3-154 Area of Corrosion on the Upper Aft Carry-Through Beam 3-94

3-155 Area of Corrosion on the Lower Aft Carry-Through Beam 3-94

3-156 Location of Cracks in Left Wing Engine Beams and Adjoining Parts 3-95

3-157 Cracks A, B, and C in the Left Wing Inboard Engine Beam 3-96

3-158 Fractograph of Crack A in the Left Wing Inboard Engine Beam 3-96

3-159 Fractograph of Crack B in the Left Wing Inboard Engine Beam 3-97

3-160 Crack C in the Left Wing Inboard Engine Beam 3-97

3-161 Crack D in the Left Wing Inboard Engine Beam 3-98

3-162 Crack in the Forward End of the Left Wing Outboard Engine Beam 3-98

3-163 Crack in the Aft End of the Left Wing Outboard Engine Beam 3-99

3-164 Location of Cracks in the Right Wing Engine Beams 3-100

3-165 Cracks in the Forward End of the Right Wing Inboard Engine Beam 3-101

3-166 Crack in the Aft End of the Right Wing Inboard Engine Beam 3-101

3-167 Crack Across the Right Wing Inboard Engine Beam 3-102

3-168 Fractograph of Crack Across the Right Wing Inboard Engine Beam 3-102

3-169 Crack in the Aft End of the Right Wing Outboard Engine Beam 3-103

3-170 Crack Mid-Length Along the Right Wing Outboard Engine Beam 3-103

3-171 Fracture Face of Crack Mid-Length Along the Right Wing Outboard Engine Beam 3-104

3-172 Crack in the Right Wing Outboard Bracket, P/N 5654109-3 3-104

3-173 Crack in the Right Wing Outboard Bracket, P/N 5650204-14 3-105

3-174 Location of Microscopic Examination Findings on the Left Wing Upper Surface 3-114

3-175 Location of Microscopic Examination Findings on the Left Wing Lower Surface 3-114

3-176 Location of Microscopic Examination Findings on the Right Wing Upper Surface 3-115

3-177 Location of Microscopic Examination Findings on the Right Wing Lower Surface 3-115

3-178 Location of Microscopic Examination Findings on the Right Fuselage Channel 3-116

3-179 Location of Microscopic Examination Findings on the Horizontal Stabilizer Upper Surface 3-117

3-180 Location of Microscopic Examination Findings on the Horizontal Stabilizer Lower Surface 3-118

3-181 Location of Microscopic Examination Findings on the Vertical Stabilizer Right Side 3-119

3-182 Location of Microscopic Examination Findings on the Vertical Stabilizer Left Side 3-119

3-183 Color Codes for Location Indications 3-124

3-184 Location of Findings From Alternative NDI and Microscopic Examination on the Left Wing Upper Surface 3-124

3-185 Location of Findings From Alternative NDI and Microscopic Examination on the Left Wing Lower Surface 3-125

3-186 Location of Findings From Alternative NDI and Microscopic Examination on the Right Wing Upper Surface 3-125

3-187 Location of Findings From Alternative NDI and Microscopic Examination on the Right Wing Lower Surface 3-126

3-188 Location of Findings From Alternative NDI and Microscopic Examination on the Right Fuselage Channel 3-126

3-189 Location of Findings From Alternative NDI and Microscopic Examination on the Left Fuselage Channel 3-127

3-190 Location of Findings From Alternative NDI and Microscopic Examination on the Horizontal Stabilizer Upper Surface 3-127

3-191 Location of Findings From Alternative NDI and Microscopic Examination on the Horizontal Stabilizer Lower Surface 3-128

3-192 Location of Findings From Alternative NDI and Microscopic Examination on the Vertical Stabilizer Left Surface 3-128

3-193 Location of Findings From Alternative NDI and Microscopic Examination on the Vertical Stabilizer Right Surface 3-129

4-1 Right Engine Compartment 4-4

4-2 Worn and Dirty Wires in Right Engine Compartment 4-5

4-3 Exposed Inner Conductor, Right Engine Compartment 4-5

4-4 Chafing of Outer Insulation and Exposed Shield 4-5

4-5 Damaged Shield Due to Cut Outer Insulation 4-6

4-6 Chafing, Damaged Shield, and Exposed Inner Conductor 4-6

4-7 Damaged Outer Insulation 4-6

4-8 Improper Termination 4-7

4-9 Chafing Due to Wires Rubbing on the Structure 4-7

4-10 Chafing of the Repaired Wire Sections 4-7

4-11	Left Engine Compartment	4-8
4-12	Cut Outer Insulation	4-9
4-13	Damaged Outer Shield	4-9
4-14	Exposed Shield, Left Engine Compartment	4-9
4-15	Bundle of Wire Exposed Due to Cutting of Outer Insulation	4-10
4-16	Exposed Shield Due to Chafing	4-10
4-17	Rubbing and Chafing of Wire	4-10
4-18	Exposed Inner Conductor Due to Chafing	4-11
4-19	Grease Contamination at a Termination	4-11
4-20	Grease Contamination at Splices	4-11
4-21	Left Console (Cockpit)	4-12
4-22	Cracked Outer Insulation, Left Console	4-12
4-23	Exposed Inner Conductor, Left Console	4-13
4-24	Corroded Ground Terminal	4-13
4-25	Right Console (Cockpit)	4-14
4-26	Improper Termination of Unused Wires, Right Console	4-14
4-27	Broken Connection	4-15
4-28	Heat-Damaged Inner Conductor	4-15
4-29	Forward Bulkhead	4-16
4-30	Wire Bundle Damaging the Air-Inlet Pipe	4-16
4-31	Dust-Contaminated Wire Bundle	4-17
4-32	Grease-Contaminated Wire Bundle	4-17
4-33	Improper Bend Radii of the Wire	4-18
4-34	Upper Bulkhead	4-18
4-35	Instrument Improperly Installed	4-19

4-36	Inadequate Clearance to Structure	4-19
4-37	Unused Wires Improperly Stowed	4-20
4-38	Improper Termination of Unused Wires	4-20
4-39	Exposed Inner Conductor	4-21
4-40	Tail Section	4-21
4-41	Heat-Damaged Wire	4-22
4-42	Unused Wires Improperly Stowed, Tail Section	4-22
4-43	Uninsulated Soldered Joint	4-23
4-44	Chafing Due to Rubbing of Wires on Structure	4-23
4-45	Fluid Contamination	4-24
4-46	Unused Wire Improperly Terminated	4-24
4-47	Chafing of Wires	4-25
4-48	Wires Contaminated With Chemical Fluids	4-25
4-49	Cracked Outer Insulation Exposing Inner Conductor	4-26
4-50	Cracked Outer Insulation, Cockpit Floor	4-26
4-51	Cracked Insulation	4-27
4-52	Missing Grommets	4-27
4-53	Instrument Panel Intact	4-28
4-54	Instrument Panel Opened	4-28
4-55	Unused Wires Improperly Stowed, Instrument Panel	4-29
4-56	Exposed Inner Conductor, Instrument Panel	4-29
4-57	Improper Termination of Wire (No Cap)	4-29
4-58	Bundle of Wire Improperly Riding on Other Bundle	4-30
4-59	Improper Clamp Size	4-30
4-60	Wiring Condition Defect Distribution	4-32

4-61	Installation Defect Distribution	4-32
4-62	Termination Defects Distribution	4-33
4-63	Zonewise Defect Distribution	4-33
4-64	Eclypse International Hand-Held Fault Location Analyzer	4-35
4-65	Open Wire Condition and the Same Wire With Added Chafing of Insulation	4-35
4-66	A Shorted Wire and the Same Wire With Added Chafing of Insulation	4-36
4-67	Chemically Contaminated Wire Bundle	4-37
4-68	Exposed Inner Conductor, Location 1	4-37
4-69	Chafing on Wires	4-38
4-70	Heat Damage, Location 1	4-38
4-71	Exposed Inner Conductor Due to Cutting of Insulation	4-38
4-72	Exposed Inner Conductor, Location 2	4-39
4-73	Exposed Shield	4-39
4-74	Outer Insulation Cut	4-39
4-75	Heat Damage, Location 2	4-40
4-76	Multiple Cuts	4-41
4-77	Heat Damage, Location 3	4-41
4-78	Chemical-Contaminated Corrosion	4-41
4-79	Example of Cracked Insulation	4-42
4-80	Exposed Inner Insulation	4-42
4-81	Cut Wire	4-42
4-82	Insulation Cracked and Exposed Shield	4-43
4-83	Exposed Inner Shield	4-43
4-84	Overheating Resulting in Exposed Inner Insulation	4-43
4-85	Cracked Outer Insulation	4-44

4-86	Insulation Resistance Measurement Test Setup	4-45
4-87	Circuit Breakers on Left Panel	4-47
4-88	Circuit Breakers on Right Panel	4-47
4-89	Relay Inspection	4-50
4-90	Pitting Found on Relay 1	4-51
4-91	Pitting Found on Relay 2	4-51
4-92	Wire Specimen Immersed to Within 2 Inches of Twisted Ends	4-53
4-93	HiPOT Set to Ramp to 2500 Vac in 1 Minute and Electrification Time of 300 Seconds	4-53
4-94	HiPOT Indicating a Pass of a Specimen Tested	4-54
4-95	Wrap Back Test Specimen	4-55
4-96	Multiple Wire Specimen Placed in Temperature Chamber	4-56
4-97	Desiccator Cooling the Wire Specimens in a Dry Atmospheric Condition	4-57
4-98	Wire Specimen Showing Cracks After Unwrapping	4-57

LIST OF TABLES

Table		Page
2-1	Airplane History	2-1
2-2	Service Bulletins	2-2
2-3	Airworthiness Directives	2-3
2-4	Major Repairs and Alterations	2-4
2-5	Supplemental Wing Inspections	2-14
2-6	Supplemental Fuselage Inspections	2-15
2-7	Supplemental Horizontal Stabilizer and Elevator Inspections	2-15
2-8	Supplemental Vertical Stabilizer and Rudder Inspections	2-15
2-9	Supplemental Main and Nose Landing Gear Inspections	2-16
2-10	Results From the Visual Supplemental Inspections	2-16
2-11	Results From the Fluorescent Penetrant SID Inspections	2-19
2-12	Results From the Eddy-Current SID Inspections	2-22
3-1	Inspection Results of Cabin Air Lines	3-4
3-2	Alternative NDI Machine Settings	3-8
3-3	Alternative NDI Indications on the Left Wing	3-9
3-4	Alternative NDI Indications on the Right Wing	3-13
3-5	Alternative NDI Indications on the Fuselage Channels	3-18
3-6	Alternative NDI Indications on the Horizontal Stabilizer	3-20
3-7	Alternative NDI Indications on the Vertical Stabilizer	3-21
3-8	Correlation Between Critical Details and SID Locations	3-24
3-9	Crack Locations and Orientations on Engine Beams	3-28
3-10	Damage Found in the Wing Carry-Through Structure	3-33
3-11	Microscopic Results of SID Inspection Areas	3-40
3-12	Critical Structural Areas and Microscopic Results	3-105
3-13	Microscopic Examination Results of the Wings	3-107
3-14	Microscopic Examination Results of the Auxiliary Spars	3-113
3-15	Microscopic Examination Results of the Fuselage Channels	3-115
3-16	Microscopic Examination Results of the Horizontal Stabilizer	3-116
3-17	Microscopic Examination Results of the Vertical Stabilizer	3-118
3-18	Microscopic Examination Results on the Stub Wings	3-120
3-19	Microscopic Examination Results on the Carry-Through Structure	3-121
3-20	Microscopic Examination Results on the Engine Beams	3-122
4-1	Location Name and Code	4-1
4-2	Inspection Codes	4-2
4-3	Defects Categorization	4-31
4-4	Bond Resistance Measurements	4-34
4-5	Intrusive Visual Inspections Summary	4-40
4-6	Microscopic Inspection Summary	4-44
4-7	Insulation Resistance Measurement Readings	4-46
4-8	Circuit Breaker Test Results	4-48
4-9	Wet DWV Test Results	4-54
4-10	Wrap Back Test Results	4-58

LIST OF ACRONYMS

AD	Airworthiness Directives
BL	Body line
CFR	Code of Federal Regulations
DWV	Dielectric withstand voltage
EDM	Electron Discharge Machining
FAA	Federal Aviation Administration
FS	Frame station
GA	General aviation
GVI	General Visual Inspection
HiPOT	High Potentiometer
ICA	Instructions for Continued Airworthiness
IVI	Intrusive Visual Inspection
MOI	Magneto-Optic Imager
NDI	Nondestructive Inspection
NIAR	National Institute for Aviation Research
P/N	Part number
REN	Right engine
SDRs	Service Difficulty Reports
SID	Supplemental Inspection Document
Vac	Volt alternating current
Vdc	Volt direct current
WS	Wing station
WSU	Wichita State University

EXECUTIVE SUMMARY

To determine if potential continuing airworthiness problems exist for the small airplane fleet as a function of the aging process, the Federal Aviation Administration (FAA) established a research program to conduct a destructive evaluation on two aged airplanes (both Cessna 402 models) used in commuter service. The intent of the program was to provide insight into the condition of a typical aged airplane by determining if a correlation exists between the airplane's maintenance history and current condition from a safety of flight perspective. This document provides the findings of a teardown evaluation of a 1979 Cessna 402C model airplane. The results in this report will provide information for use in future investigations into the aged small airplane fleet and help determine if additional research is required to address any problems observed. Specific observations are made regarding findings discovered during the teardown evaluation on the particular airplane selected.

The destructive evaluation of the commuter-class airplane was separated into three main tasks: (1) inspection of the airframe and airplane systems, (2) teardown examination of the airframe and airplane systems, and (3) assessment of the airplane wiring. During the inspection phase, three subtasks were performed: a survey of airplane maintenance records, visual inspection of the airframe and airplane systems, and supplemental airframe inspections. The teardown examination involved disassembling the airframe and major airplane sections, inspecting airplane systems' components, assessing primary airplane structure using alternative nondestructive inspection (NDI) techniques, and performing microscopic examinations of critical structural areas. As part of the destructive evaluation, inspections and testing were also performed on airplane wiring to assess the condition and degradation of electrical wiring in small airplanes and to evaluate maintenance procedures.

During the inspection phase, a survey of airplane maintenance records provided the information necessary to correlate maintenance practices to airplane condition. Visual inspections of the airframe and airplane systems and supplemental airframe inspections determined the condition of the airplane based on normal maintenance activity. The 1979 Cessna 402C model airplane selected for destructive evaluation accumulated a total of 25,546.6 hours of flight time and was primarily used for commuter service along the Eastern North American coast, flying in and around Cape Cod, the Florida Keys, and the Caribbean. Only three findings from the visual airframe and airplane systems inspections were deemed noteworthy by licensed airframe inspectors. These findings included a leak found in a hydraulic flow pressure switch, an improper repair of the right-hand engine exhaust pipe, and corrosion found on the vertical stabilizer under an antenna. Supplemental NDI, consisting of visual, eddy-current, liquid penetrant, magnetic particle tests, and ultrasonic test inspection methods, were also performed on the Cessna 402C airplane. Damage was identified in several areas, including stub wings, wing attachment fittings, wing auxiliary spars, wing spar caps, engine beams, upper wing skin, horizontal stabilizer spar caps and webs, the elevator and rudder structure, and the main/nose landing gear retraction system.

During the teardown examination phase, all airplane systems' components and wiring were removed, thereby providing full access to all critical structural areas on the airplane. Inspections of the airplane systems' components assisted in determining if any aging effects were related to them. Assessment of the primary airplane structure was performed to assess the airframe for

surface and subsurface flaws prior to disassembly using alternative NDI techniques with capabilities to detect subsurface flaws. The microscopic examination of critical structural areas provided verification and detailed quantification of the extent of damage found during the supplemental inspections, assessment of primary airplane structure using alternative NDI techniques, and disassembly of the entire airframe.

Systems' components inspections were accomplished to identify areas where mechanical wear or corrosion had affected either the operation of actuators, linkages, and cables, or the ability of hydraulic systems to sustain pressurization. No additional findings were discovered on systems' components beyond the exhaust pipe repair and leaking hydraulic flow pressure switch found during the systems' component visual inspections. A leak test of all oxygen, fuel, and vent lines found five cabin vent lines with leaks, and an additional vent line was found to be deeply pitted upon visual inspection. Assessment of the primary airplane structure using alternative NDI techniques, identified potential surface and subsurface defects prior to disassembly of the structure with multiple crack and corrosion indications identified on the front and rear spars of the left and right wing, on the left and right side fuselage channels, and on the front and rear spars of the horizontal and vertical stabilizers. Microscopic examinations of suspect areas and critical structural details located and characterized cracks and/or areas of corrosion in the following areas: the stub wing attach fittings, wing attach fittings, front and rear spars of the wings, engine beam assemblies, carry-through beams and webs, front and rear spars of the horizontal stabilizer, front and rear spars of the vertical stabilizer and fuselage channels.

The inspections and tests performed as part of the airplane wiring assessment were mainly divided into two categories: nondestructive and destructive. The nondestructive inspections and tests were comprised of a general visual inspection, in situ wiring tests, and laboratory tests. The destructive tests were comprised of dielectric withstand voltage (DWV) tests and mandrel bend/wrap back tests. The most dominant issues found in the general visual inspections were chafing, rubbing, cutting, exposed shields, exposed inner conductors, cutting through outer insulation, improper terminations of end terminals, improper termination of wires (no cap), unused wires improperly stowed, corroded terminals, and several others. Areas including the right engine, left engine, and instrument panel displayed the most findings. Looking at the described flaws, it can be inferred that the issue with the wires was caused less by aging and more by maintenance, especially with the wires in the engine compartment. Among all the laboratory tests performed, the circuit breaker test revealed the most important aspect of the aging issue, showing that 13% of the circuit breakers tested had defects. The destructive laboratory tests also demonstrated a few issues with wires with respect to age. Since only a few wires were 26 ft or more in length, only a small number of wires could be reliably tested for DWV; all these wires did pass the test. Only 16.67% of the wires failed the mandrel bend/wrap back test, which indicated that the wires generally had good quality insulation.

1. INTRODUCTION.

The economic and market conditions of present day aviation companies are requiring that airplanes be used far beyond their original design life objectives. This aging airplane concern exists for all types of airplanes including commercial, military, and general aviation (GA). The concern is being amplified as more companies use aged airplanes and rely on standard inspection practices for a guarantee of airworthiness assurance. Standard practices to ensure continuing airworthiness include scheduled inspection and maintenance tasks contained in maintenance manuals, Instructions for Continued Airworthiness (ICA), and service bulletins. These practices are not just limited to structural integrity but also include wiring and systems integrity as well. These initiatives have provided timely preventive maintenance recommendations that permit continued safe operation of aging airplanes until retirement from service for economic reasons.

1.1 BACKGROUND.

Although the general public is primarily concerned with the airworthiness transport category airplanes where most research funding resources and efforts have been focused, a growing concern also exists with the small airplane fleet. Most small airplanes are generally classified as GA airplanes. When one mentions general aviation, the traditional image usually involves a four passenger airplane like a Cessna 172. However, GA covers a wide range of airplanes. In the context of this program, a GA airplane is defined as a Title 14 Code of Federal Regulations (CFR) Part 23 (or predecessor Civil Air Regulation 3) airplane, which includes normal, utility, acrobatic, and commuter category airplanes. This classification includes airplanes operating commuter, cargo, or taxi service under CFR Part 135. The GA fleet includes approximately 210,000 fixed-wing airplanes with about 71% being single-engine piston airplane; 10% being multiengine piston airplane; 10% being experimental airplane; and 9% being classified as turboprop, jet, glider, or lighter-than-air. Use of the GA fleet is categorized as follows: 60% for personal use, 21% for business use, 6% for instruction, 4% for aerial application and observation, 3% for commuter service, 2% for public use, and 4% for other use. The investigations on large transport and military airplanes have focused on the structural integrity as well as wiring and systems-related aging problems.

The reliability and maintenance of electrical wiring and electrical components in aging airplanes have also become a major concern for the aviation industry. The Federal Aviation Administration (FAA) and the Aging Transport Systems Rulemaking Advisory Committee have been working to assess the condition of electrical wiring and the effectiveness of wiring maintenance procedures. However, these efforts have been focused on transport category airplanes. Due to the large number of smaller GA airplanes in service, a need for examining the condition of wiring and electrical components and maintenance procedures for smaller airplanes exists.

Due to the large number of GA airplanes and their wide usage, the aging aspects of these airplanes must be addressed. In September 2002, the FAA Small Airplane Directorate and the Office of Aviation Research and Development Airport and Aircraft Safety R&D Division established a research program to begin addressing the aging concerns regarding small airplanes. The main purpose of this program was to provide insight into the condition of a typical aged small airplane and determine if a correlation exists between its maintenance and apparent

condition. The research program was primarily conducted by the Aging Aircraft Research Laboratory at the National Institute for Aviation Research (NIAR), Wichita State University. The program's major objective focuses on the integrity and aging aspects of small airplanes.

1.2 RESEARCH OBJECTIVES.

Much of the current concern related to aging effects on airplanes involves calendar age, rather than flight hours. For instance, deterioration of wiring, aging effects on airplane systems (control systems, seals, cables, etc.), and corrosion are calendar related, and these effects may possibly be a continued safety of flight concern. For example, about 25,000 airplanes presently exist that are older than 50 years and still have the original electrical systems. Currently, no inspection criteria exist for evaluating the condition of aged wiring. In addition, major attachment fittings, such as wing attachment fittings, are typically never removed and inspected. These types of concern are what this research program is primarily focused on to begin addressing and providing insight into the aging small airplane fleet.

The research program has a short-term objective, to be achieved over 2 years, and a long-term objective, to be achieved over a 5-year period. The short-term objective is to determine if potential continuing airworthiness problems exist for the small airplane fleet as a function of the aging process. The long-term objective is to establish guidance to ensure that current maintenance programs of small airplanes are providing acceptable levels of continued airworthiness. Achieving the short-term objective should determine if generic degradation indicators exist in the small airplane fleet. These indicators will likely include structural issues (corrosion/cracking); electrical systems or wiring; airplane systems, such as fuel, hydraulic, pneumatic, mechanical, and flight control systems; and maintenance, service, and inspection quality. Determination of generic degradation indicators will assist in providing initial generic inspection guidance, such as:

- Do maintenance inspection programs address all areas of concern appropriately?
- What was found in areas that normal maintenance would not see?
- Are additional inspection criteria required for aged airplanes?
- Should specialized one-time inspections at some age be required?
- Should inspections and maintenance programs become more extensive as the airplane ages?

To achieve the research objectives of the initial phase of the program, a destructive evaluation was conducted on two aged airplanes (both Cessna 402 models) used in the commuter service. The intent of the program was not to provide statistical evidence for guideline development for inspection, but to provide insight into the condition of a typical aged airplane and to see if a correlation exists between its maintenance history and current condition from a safety of flight perspective. The findings resulting from this program will be documented in a summary report for use in future investigations into the aged small airplane fleet and to determine if additional research is required to address any problems observed. Specific observations made regarding the

particular airplane selected and generic recommendations that are applicable to the small airplane fleet will also be provided.

1.3 TECHNICAL APPROACH.

The destructive evaluation of this commuter-class airplane was separated into three main tasks: (1) inspection of the airframe and airplane systems, (2) teardown examination of the airframe and airplane systems, and (3) assessment of the airplane wiring. Each section below describes the airplane selected for teardown evaluation and the subtasks conducted under each of the main tasks.

1.3.1 Airplane Selection.

The Cessna 402 model was selected because it represents a large portion of the small airplane commuter fleet. It shares many design commonalities with other small twin class airplanes, such as the Piper Navajo. The design concepts of both systems (mechanical, electrical, and flight controls) and structures (layout and materials) are similar model to model and manufacturer to manufacturer. Therefore, findings from the destructive evaluation of the Cessna 402 model are applicable to all small airplane models, regardless of manufacturer.

Figure 1-1 shows the second airplane selected for destructive evaluation, a 1979 Cessna 402C model, tail number N780EA, which was used in the typical commuter-class role. The twin-engine airplane had over 25,500 airframe hours with a current registration and was most recently used for commuter service by Cape Air/Nantucket Airlines of Hyannis, Massachusetts, flying in and around Cape Cod and the Caribbean. Maintenance records, log books, the Airworthiness Directive (AD) compliance list, and FAA 337 forms were included with the purchase of this airplane.

Figure 1-1. 1979 Cessna 402C, Tail Number N780EA

1.3.2 Inspection Phase.

During the inspection phase, three subtasks were performed: a survey of the airplane maintenance records, visual inspections of the airframe and airplane systems as prescribed by maintenance manuals, and supplemental inspections per the Supplemental Inspection Document

(SID) developed by Cessna Aircraft Company. The maintenance records survey provided information on the airplane's maintenance history for correlation of maintenance practices to airplane condition, while the inspections determined the condition of the airplane based on normal maintenance activity.

1.3.3 Teardown Examination Phase.

The research program focused on the destructive evaluation of commuter-class airplanes; however, before that, a nondestructive evaluation was also conducted according to recommended practices. The teardown examination involved disassembling the airframe and major airplane sections; inspecting the airplane systems' components; inspecting the primary airplane structure using alternative nondestructive inspection (NDI) techniques; and performing a microscopic examination of critical structural areas. All of the airplane systems' components and wiring were removed during disassembly, allowing full access to all critical structural areas on the airplane. Inspection of the airplane systems' components also assisted in determining if any aging effects were related to the airplane systems. The alternative NDI was performed to assess the airplane's primary structure prior to disassembly. The microscopic examination of critical structural areas provided verification and detailed quantification of the extent of damage found during supplemental inspection, alternative NDI assessment, and disassembly of the entire airframe.

1.3.4 Airplane Wiring Assessment.

As part of the airplane's destructive evaluation, electrical wiring inspections and testing were performed to assess the condition and degradation of electrical wiring in small airplanes and to evaluate maintenance procedures. The wiring inspections and tests were divided into two categories: nondestructive and destructive. The NDI and testing were comprised of general visual inspection, in situ wiring, and laboratory tests, while destructive testing was comprised of dielectric withstand voltage (DWV) and mandrel bend/wrap back tests.

2. INSPECTION PHASE.

The inspection phase of the Cessna 402C evaluation established the current condition of the airplane by a survey of airplane maintenance records, visual inspections per the Cessna 402C Maintenance Manual [1], and supplemental inspections per the Cessna 402C SID [2]. These inspections allowed the NIAR team to determine which flaws could be found in the field. The visual inspections were prescribed for specific airframe locations, system components, and wiring locations. The supplemental inspections were composed of NDI techniques targeted at specific airframe locations. These locations were determined based on engineering analysis predictions, structural testing results, or maintenance experience. Upon completion of the inspections, the NIAR team made an effort to correlate airplane condition with airplane usage and maintenance history through the survey of the airplane maintenance records and a review of Cessna 402C Service Difficulty Reports (SDRs).

2.1 SURVEY OF AIRPLANE MAINTENANCE RECORDS.

Since leaving the production line in 1979, the Cessna 402C was registered under four tail numbers and operated by five charter services, as shown in table 2-1. Used primarily in East coast commuter operations, the airplane accumulated 25,546.6 total airframe hours.

Table 2-1. Airplane History

Location	Arrival Date	Departure Date	Total Usage	Total Hours
Provincetown Boston Airlines	01/21/1980	05/17/1989	10,575	10,575
Gulfstream Airlines	05/17/1989	06/12/1995	8,019	18,594
Air Nevada Airlines	07/08/1995	03/28/1998	1,976.8	20,570.8
Eagle Canyon Airlines	03/28/1998	01/07/1999	313.7	20,884.5
Hyannis Air Service	04/15/1999	09/15/2003	4,437.6	25,546.6

The service bulletins performed on the airplane are listed in table 2-2, while table 2-3 shows all ADs that were complied with. The most notable service bulletins and ADs concerning airplane structure were MEB 85-3, MEB 99-3, MEB 99-7-10-13, AD 81-11-05, AD 97-26-16, AD 99-11-13, and AD 2000-23-01. These service bulletins and ADs are briefly described below:

a. AD 81-11-05, AD 97-26-16, and MEB 85-3 are all related to the incorporation of engine mount kits that eliminated the need for the repetitive inspection requirement of AD 85-13-03 R2. The purpose of these ADs is to prevent failure of the engine mount beam caused by fatigue cracks, which could result in loss of the engine and, consequently, loss of the airplane. MEB 85-3 specified using radiographic methods to inspect the engine mount beams for cracks in accordance with the accomplishment instructions.

b. The actions specified by AD 99-11-13, AD 2000-23-01, and MEB 99-3 are intended to detect and correct any cracks in the front, rear, and auxiliary wing spars, which could result in a reduction or loss of control of the airplane. The actions required include conducting both an external and internal inspection of the spars for cracks and then repairing the spar if any crack is found. AD 2000-23-01 established repetitive

inspections of the spars and supersedes AD 99-11-13, which required a one-time inspection of the spars and repairing any cracks found. AD 99-11-13 also required reporting the results of the inspection to the FAA to provide data to help determine whether or not the inspection should be repetitive. MEB 99-3 provided the instructions for inspecting the front, rear, and auxiliary wing spars for cracks.

c. The actions specified by AD 2000-01-16 and MEB 99-7-10-13 are intended to detect and correct cracks and corrosion in the exhaust system, which could result in exhaust system failure and a possible uncontrollable in-flight fire with pilot or passenger injury. This amendment supersedes AD 75-23-08 R5, which required repetitively inspecting and replacing or repairing the exhaust system. AD 2000-01-16 provides simplified procedures for inspections and replacements. It also revises the inspection intervals, requires replacing certain unserviceable parts, and removing the exhaust system for a detailed inspection. MEB 99-7-10-13 includes procedures for installing stainless steel engine beam covers and inspecting the engine beams for various Cessna airplane models.

Table 2-2. Service Bulletins

Date	Service Letter	Description	Total Airframe Hours
November 81	MEB 81-18	Wheel well lower skin gusset installation	1,514.8
January 82	MEB 81-28	Blow down bottle clamp	1,696.8
January 82	MEB 81-36	Fuel filter bowl inspection	1,746.5
January 84	MEB 83-37	MLG scissors bolt and washer installed	4,552.9
April 84	MEB 84-10	Remove and replace MLG rod end	5,028.3
July 84	MEB 84-12	Wing spar web modification	5,382.9
November 84	MEB 84-25	Rudder pedal torque tube inspection	6,026.0
December 84	MEB 81-38	Pitch actuator limiting resistor	6,082.8
April 85	MEB 85-3	Supplemental engine mount inspections	6,658.8
May 99	MEB 99-3	Inspection of lower spar	20,942.6
May 99	MEB 99-3	Inspection of lower spar	21,008.5
August 99	MEB 99-6/9/12	Installation of inspection panels to exhaust systems	21,274.0
August 99	MEB 99-7/10/13	Installation and inspection of stainless steel engine beams	21,274.0
August 99	MEB 99-8/11/14	Replacing X-feed fuel lines with stainless steel	21,274.0

MLG = Main landing gear

Table 2-3. Airworthiness Directives

Date Complied	AD	Description	Recurring? Yes or No	Total Airframe Hours
June 80	75-23-08R5	Exhaust system	Yes	297.9
N/A by Serial Number	80-13-14	Fuel flow transmitter	N/A	N/A
June 81	81-09-09	250-hour heater inspection	Yes	1,089.8
June 81	81-11-05	Engine mount beams	Yes	1,041.2
March 84	83-01-06	Floatation device check	No	Not Recorded
November 84	84-20-02	Nose landing gear	Yes	Not Recorded
February 85	84-26-02	Induction air filters	No	Not Recorded
April 99	87-21-02R1	Fuel filler openings	No	Not Recorded
N/A by Serial Number	90-02-13	Main gear inner bearing	No	N/A
June 95	92-16-18	Passenger seat reinforcement	No	18,609.7
June 95	95-09-13	Fuel inlet float valve	Yes	Not Recorded
April 99	97-01-13	Fuel, oil, and hydraulic hoses	No	20,900.2
November 97	97-26-16	Engine mount beams	Yes	17,827.6
N/A	98-04-28	AFM—limitations section—icing	De-ice system removed prior to AD issuance	N/A
April 99	98-14-03	Transponder	No	20,900.2
April 99	98-23-01	LH and RH vacuum pumps	No	20,900.2
April 99	98-25-10	Airplane seat belts	No	20,900.2
June 00	99-11-13	Wing spars	No	Not Recorded
February 00	2000-01-16	Exhaust system	Yes	21,909.9
December 00	2000-23-01	Wing spars	No	22,661.4

N/A = Not applicable
AFM = Airplane Flight Manual
LH = Left hand
RH = Right hand

All documented major repairs and alterations are listed in table 2-4. Some of these include repair of rudder damage, nose area, left wing leading edge, and left stub wing front upper spar web. Each repair is briefly described below.

a. Rudder Damage Repair: The top aft section of the rudder skin was removed and inspection of the area damaged was accomplished in accordance with Cessna Maintenance Manual Chapter 51-40-02. All damaged parts were ordered from the manufacturer and installed in accordance with Cessna Maintenance Manual Chapter 51-30-01. The rudder was completely reassembled, painted, and static balanced in accordance with Cessna Maintenance Manual Chapter 51-50-00.

b. Repair to Nose Area: This repair fixed the damage with Cessna factory supplied parts using the original rivet patterns.

c. Left Wing Leading-Edge Repair: The left wing leading edge was repaired in accordance with Aeronautical Engineers, Inc., drawing AE4845 and FAA form 8130-3, dated April 29, 1991.

d. Left Wing Front Spar Upper Web: A 0.25-inch crack was found below the upper spar cap just outboard of the fuselage, starting at the lower center of the relief cutout and running downward. The crack did not terminate within any rivet line. The spar web cutout was enlarged to remove the cracked area in accordance with Cessna's Continued Airworthiness Inspection number 57-10-02.

Table 2-4. Major Repairs and Alterations

Date	Description
February 80	Avionics installed
March 81	Avionics updated
March 82	Baggage door latches installed
September 86	Fixed rudder damage
June 90	Avionics downgraded
June 90	RH landing lights
December 90	Avionics upgraded
May 91	Repaired nose area
May 91	De-ice system removed
May 91	Repaired LH wing leading edge
February 94	Propeller changed
October 94	LH front upper stub wing spar web repaired
December 94	Installed air filters
July 95	Updated tour system
July 95	Upgraded oil drain plug
July 98	Installed vortex generators
July 98	Avionics upgraded
July 98	Cable upgraded
July 98	Ballast box installed

Table 2-4. Major Repairs and Alterations (Continued)

Date	Description
March 99	Installed vortex generators
April 99	Strobe upgraded
April 99	Removed tour system
April 99	Removed ballast box
December 00	Air speed indicator recalibration due to supplemental type certificate
December 00	Installed baggage locks for wings

LH = Left hand
RH = Right hand

2.2 SERVICE DIFFICULTY REPORTS DATABASE REVIEW.

The review of Cessna 402C SDRs involved reviewing 2094 reports from January 1974 through November 2002. Figure 2-1 shows the breakdown of SDRs by airplane section. Almost a third of these documents were related to the landing gear, with an additional quarter related to the engines. Only 18 percent were related to the airframe, which is the area of primary interest for the teardown evaluation. SDRs are not always generated for each issue that arises; therefore, common problems may exist that are not appropriately represented by the SDR database.

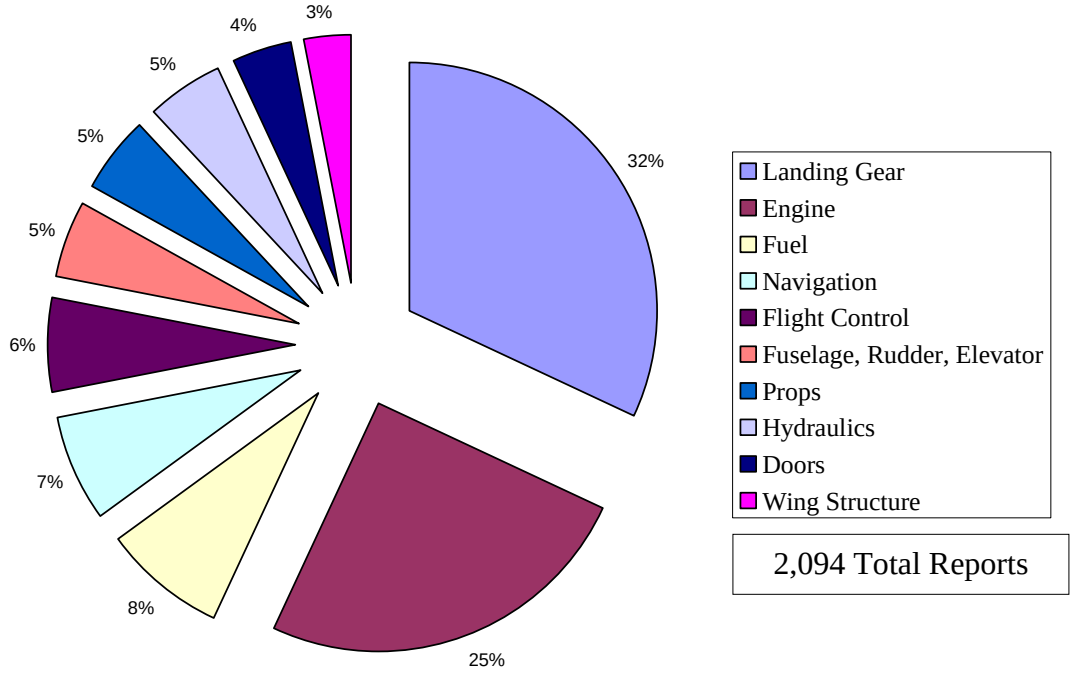

Figure 2-1. Results of the SDR Database Review by Airplane Section

2.3 VISUAL INSPECTIONS OF AIRFRAME AND AIRPLANE SYSTEMS.

The general condition of the airplane was evaluated through visual inspections prescribed in the Cessna 402C Maintenance Manual [1] supplied by Cessna. These visual inspections are typically required on an annual basis. The intent of these inspections was to discover all possible visible defects and document each defect's severity and location. Each inspection was duplicated by independent inspectors. The results of these inspections were reviewed by licensed airframe mechanics to determine which findings were noteworthy (defects that would require further maintenance action).

2.3.1 Operational Checks.

Operational checks, listed below, were performed to determine which airplane systems were properly functioning prior to teardown. The only nonfunctional area found was the left-hand wing tip light, which failed to extend/retract or light up. Several systems identified in the maintenance manual were not installed on this airplane; therefore, those systems are not listed. The list only identifies the systems that were installed and checked on this Cessna 402C airplane.

- Heater
- Stall Warning System
- Stall Warning Vane Heater Elements
- Static Port Heater Elements
- Pitot Tubes Heater Elements
- Flight Compartment Lights
- Wing Locker Baggage Light
- Exterior Lights
- Control Column
- Autopilot Controller
- Fuel Selector Gear Box
- Fuel Inlet Float Valve
- Rudder Pedals and Linkages
- Rudder Trim Tab Control and Indicator
- Rudder Gust Lock
- Electric Elevator Trim
- Elevator Trim Tab Control and Indicator
- Control Wheel
- Aileron Travel
- Inboard and Outboard Flap Bellcranks and Pushrods

2.3.2 System Inspections.

Sixty-seven different systems inspections were performed in accordance with the maintenance manual, which included the following instructions:

- Inspect for basic flaws such as cracks, dents, corrosion, missing fasteners, loose fasteners and scratches.

- Inspect for excessive wear on critical moving parts, leaks or chaffing of hoses, and instrument condition.

- Inspect for leaks, kinks, and chafing of hoses, skin, and splices for cracks, wrinkles, abnormal stresses, and elongated boltholes.

- Inspect attaching bolts and hinge attaching points for security, and for sheared rivets or buckling of spar web on horizontal stabilizer.

- Check heater fuel system for leaks, secure connections, and condition of seals and gaskets; check seats and belts for condition, security, operation, and fraying of webbing material; examine control quadrant for excessive wear and to ensure that no broken teeth of mixture control racks and ratchet stops exist.

- Inspect miter gears and sprocket for chipped or broken teeth, inspect bolt- and pinholes for elongation; check tire pressure; inspect retainers and snap rings for distortion; check hoses for leaks, bulges, deterioration, and chafing; and inspect brake lining for disc warping and wear limits.

Each inspection, as shown in figure 2-2, was performed by two inspectors independently. The only two findings from the system visual inspections included a leak in the hydraulic flow pressure switch, shown in figure 2-3, and an improper repair of the right-hand exhaust pipe, shown in figure 2-4.

- Heater
  - Components and Lines
  - Fuel Lines in Wing
  - Inlets and Outlets
  - Ventilating Air Blower
  - Combustion Air Blower
  - Sealant
  - Electrical System
  - Control Cables and Valves
  - Fuel Screen and Filter
  - Air Distribution Lines and Ducts
  - Nose Ram Air
- Air Conditioning
  - Lines
  - Compressor and Motor
  - Condenser
  - Condenser Fan
  - Condenser Fan Motor
  - Evaporator Fan
  - Hydraulic Lines, Pumps, and Components
- Autopilot
  - Actuators
  - Computer Amplifier and Components
  - Cables
  - Navigation Indicators, Controls, and Components
- Fire Detection Sensors
- Fuel
  - Valve and Cross-Feed Control
  - Filter
  - System Plumbing and All Components
  - Engine Pumps
  - Flow Indication System
  - Metering Unit Filter
  - Discharge Nozzle
  - Pressure Switch
- Engine Exhaust System
- Hydraulic
  - Pump
  - Hoses
  - System Pressure Switch
  - System Flow Switch
  - Reservoir Vent Line
  - Pressure Lines
- Oxygen
  - System
  - Masks and Hose Assemblies
  - Cylinder
- Vacuum
  - Pump and System
  - Dry Air Pump and System
  - Dry Air Pump
  - Pump Pad Seal
  - System Hoses
  - System Air Filter
  - System Relief Valve
- Waste
  - Waste Container
  - Pump
  - Bowl Assembly
  - Seat
  - Relief Tube
  - Stowage Drawer
- Deice
  - Surface Deice Regulator
  - Pressure Control Valve
  - De-Ice Control Valves
  - Boots
  - Alcohol Anti-Ice Nozzles
  - Alcohol Anti-Ice Pumps
  - Alcohol Anti-Ice System
- Windshield Static Discharge
- Instruments
  - Altimeter
  - Static System
  - Static System Sumps
  - Emergency Locator System
  - Transponder System

Figure 2-2. Airplane Systems Inspection

Figure 2-3. Static Leak in the Hydraulic Flow Pressure Switch

Figure 2-4. Welded Plate Fixed to the Right-Hand Exhaust Pipe

2.3.3 Airframe Inspections.

One-hundred fourteen different visual airframe inspections, as shown in figure 2-5, were performed on the Cessna 402C with the intent of finding every detectable flaw on the airplane, which led to a large number of documented flaws. Most of these flaws were deemed minor by licensed airframe mechanics, meaning that no further maintenance action was required. With an aged airplane, flaws such as minor cracks, scratches, dents, paint chips, and slight corrosion were to be expected and posed no immediate threat to the safety of the airplane. These flaws were recorded, but were determined not to be serious. In addition to dents and areas of missing paint, slight to moderate corrosion was noted on a majority of the screws on the airplane. Also, it was noted that some of the disposable parts, such as seals and hoses, were due to be replaced.

- Vertical and Horizontal Stabilizer
- Rudder
  - Bellcrank
  - Cables
  - Pedals
  - Trim Tab
  - Trim Tab Actuator
  - Trim Tab Cables
  - Trim Tab Cable Stop Blocks
  - Gust Lock
  - Trim Tab Actuator Push Rod
  - Yaw Damper Actuator and Cables
- Elevator
  - Elevator
  - Bellcrank
  - Cables
  - Cable Guard
  - Trim Tab
  - Trim Tab Actuator
  - Trim Tab Cables
  - Trim Tab Cable Stops
  - Trim Tab Actuator Push Rod
  - Electrical Trim Actuator
  - Yaw Damper
- Wing
  - Locker Door
  - Locker Door Seals
  - Nacelle Firewall Structure
  - Nacelle Structure and Cowling
  - Engine Beam and Nacelle Structure
  - Engine Shock Mounts and Ground Straps
  - Locker Baggage Compartments
  - Oil Filter Door and Access Panel
  - Cowl Flap Control Cables and Housing
  - Cowl Flap Hinge
  - Cowl Flap Linkage Pivot Points and Spherical Rod Ends
  - Wings
  - Wing and Stub Wing Structure
  - Front Wing Spar Web
  - Wing Spar Fittings
  - Drain Opening and Vent Holes in Bottom of Engine Nacelle
  - Drain Opening and Vent Holes in Bottom of Wing
  - Outboard Leading Edge Drain Located in Bottom of Nacelle
- Flaps
  - Flaps
  - Motor, Position Indicator, and Actuator Assembly
  - Preselect System
  - Inboard and Outboard Bellcrank and Push Rods

Figure 2-5. Airframe Visual Inspections

- Aileron
  - Aileron
  - Actuator Yoke
  - Wing Cables
  - Bellcrank
  - Fuselage and Control Column Cables
  - Trim Tab
  - Trim Tab Actuator
  - Trim Tab Cables
  - Trim Tab Cable Stop Block
  - Trim Tab Control and Indicator
  - Quadrant
  - Trim Tab Actuator Push Rod
- Fuselage
  - Tailcone Drain Tubes
  - Tailcone Wire Bundle
  - Tail Structure
  - Placards and Decals
  - Cabin Door
  - Cabin Door Seal
  - Cabin Door Latch Pins
  - Cabin Door Latch Pins Guide
  - Cabin Door Latch Pin Receptacles
  - Crew Door Seals
  - Crew Door
  - Nose Baggage and Avionics Door
  - Emergency Exit Door and Handle
  - Emergency Exit Door Seal
  - Emergency Exit Door Hinges, Latch Pins and Stop Assembly
  - Nose Structure
  - Fuselage Structure
  - Control Pedestal
  - Control Quadrant
  - Windows and Nonheated Windshield
  - Pilot's and Co-Pilot's Inertia Reel, Seat Belts and Shoulder Harnesses
  - Pilot's and Co-Pilot's Seats
  - Scuff Plates
  - Seat Tracks
  - Passenger's Seat Belts
  - Passenger's Seat
  - Interior Furnishings
- Landing Gear
  - System
  - Retracting Linkage
  - Shock Strut
  - Main Gear Torque Links
  - Nose Gear Torque Links
  - Nose Gear Trunnion Pivot Bearing
  - Main Gear Trunnion Pivot Bearing
  - Uplock Roller Mounted on Gear
  - Nose Gear Actuator Anchor Lugs
  - Wheel Bearings
  - Nose Gear Shimmy Damper
  - Nose Wheel Steering Cable
  - Nose Wheel Steering Gimbal Bolts
  - Nose Gear Steering Stop Blocks
  - Nose Gear Steering Bellcrank
  - Nose Gear Fork
  - Wheel and Tire
  - Doors
  - Brake System Plumbing
  - Brake Assemblies
  - Nose Gear Drag Brace
  - Nose Gear Actuator Piston Rod End
  - Main Gear Actuator Piston Rod End
  - Emergency Gear Blowdown Control Cable
- Hydraulic System
- Travel
  - Rudder Trim Tab
  - Elevator
  - Flaps-Hardware
  - Flaps
  - Aileron Trim Tab
  - Elevator Trim Tab

Figure 2-5. Airframe Visual Inspections (Continued)

Only one area of the airframe was determined to need some corrective maintenance. When maintenance technicians from Cape Air removed the antenna (part number (P/N) VT10-56-5) from the vertical stabilizer, the skin had a significant area of corrosion. The antenna, shown in figure 2-6, was not removed as part of any inspection. Therefore, the area of corrosion, which is shown in figure 2-7, would not have been found during any of the prescribed visual or supplemental inspections.

Figure 2-6. Antenna Location on the Vertical Stabilizer

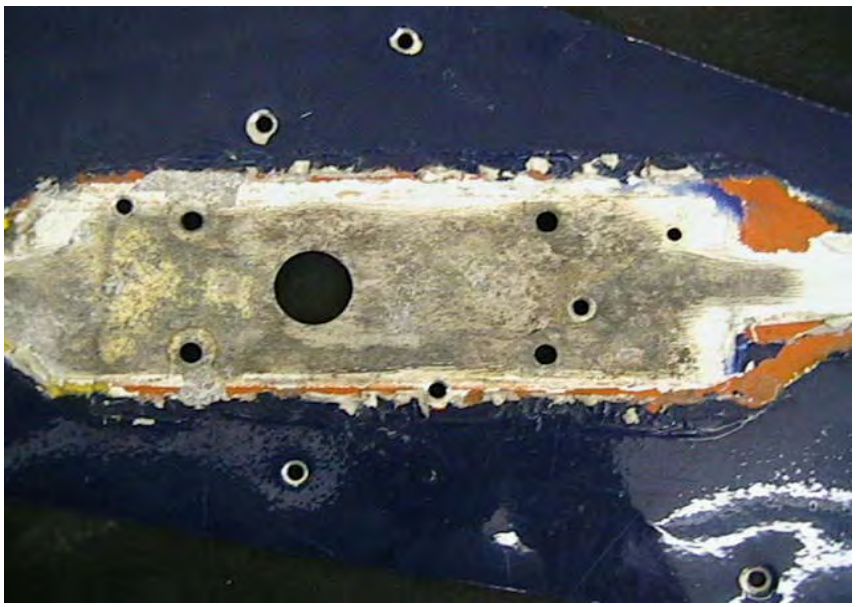

Figure 2-7. Corrosion Under the Vertical Stabilizer Antenna

At the conclusion of the visual inspections, 357 total findings were documented. Only three findings were deemed noteworthy by certified airframe inspectors. These findings were the static leak in the hydraulic flow pressure switch, the welded plate fixed to the right-hand exhaust pipe, and the corrosion on the vertical stabilizer skin under the antenna. A majority of the 357 findings were corrosion related, as shown in figure 2-8. As with the Cessna 402A, most of the findings were located on the fuselage and wings, as shown in figure 2-9.

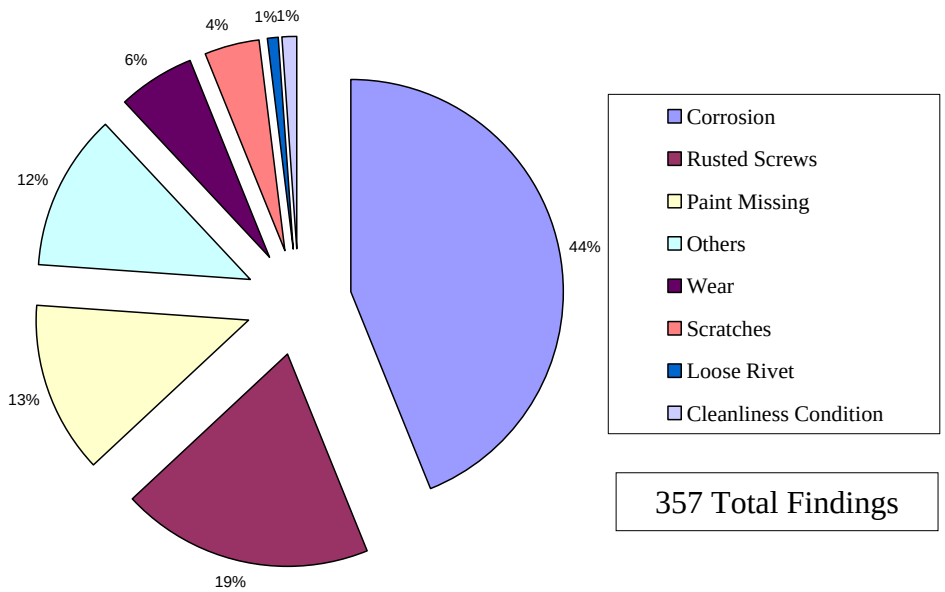

Figure 2-8. Visual Inspection Findings by Type

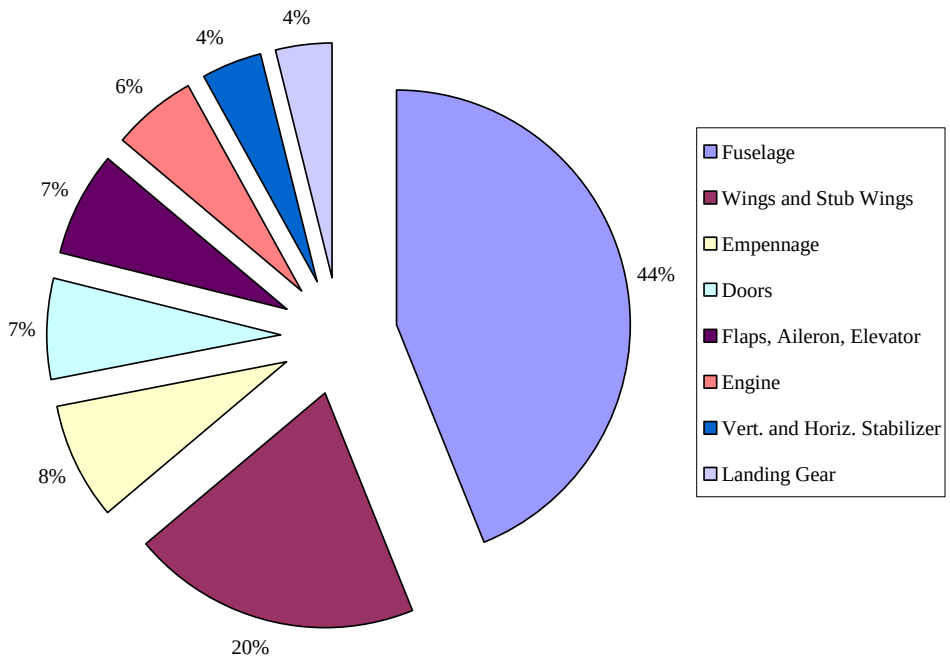

Figure 2-9. Visual Inspection Findings by Airplane Location

2.4 SUPPLEMENTAL INSPECTIONS.

All supplemental inspections were performed in accordance with the SID [2]. These supplemental inspections were developed to use NDI techniques to inspect areas that were analytically predicted to have damage, exhibited damage in a structural test, or had a history of maintenance issues. Stress, fatigue, and damage tolerance analyses were used to predict

structural locations that were more likely to experience cracking. These analyses were supported with static and fatigue tests of structural components and a full-scale airplane to determine areas where failure or cracks may occur. Three sources of information were used to determine the frequency of maintenance issues: (1) surveys of current Cessna model 402C owners, (2) service bulletins and service information letters, and (3) FAA SDRs.

The supplemental inspections employed several NDI techniques, including visual inspection, eddy-current surface and bolthole inspection, fluorescent liquid penetrant inspection, magnetic particle inspection, and ultrasonic inspection. These inspections were performed on specified areas of the wings, fuselage, horizontal and vertical stabilizers, and landing gear. All of the visual supplemental inspections were performed by two licensed airframe mechanics from Cessna and Cape Air. A Cessna-supplied Level III NDI examiner, an NIAR Level II inspector, and an NIAR Level I inspector performed all of the remaining supplemental inspections. Table 2-5 includes the supplemental inspection name, method, and number performed on each of the wings. Table 2-6 lists the inspections performed on the fuselage, while tables 2-7 and 2-8 detail the inspections performed on the horizontal and vertical stabilizers and their respective flight control surfaces. Table 2-9 contains the inspections conducted on the main and nose landing gear.

Table 2-5. Supplemental Wing Inspections

Title	Method of Inspection	SID Number
Aileron hinges and fittings	Visual	27-10-05
Aileron hinges and fittings	Liquid penetrant	27-10-05
Engine beams	Visual	54-10-03
Engine beams	Surface eddy current	54-10-03
Wing forward carry-through spar cap	Bolthole eddy current	57-10-14
Wing front spar lower cap at root fitting attach	Bolthole eddy current	57-10-15
Wing front spar lower cap inspection/modification	Bolthole eddy current	57-10-16
Wing forward auxiliary spar lower cap	Bolthole eddy current	57-10-17
Wing aft auxiliary spar lower cap	Visual	57-10-18
Wing aft auxiliary spar lower cap	Bolthole eddy current	57-10-18
Wing rear spar lower cap at spar splice	Visual	57-10-19
Wing rear spar lower cap at spar splice	Bolthole eddy current	57-10-19
Wing aft carry-through spar lower cap BL 54.50	Bolthole eddy current	57-10-20
Bonded wing inspection and sealing*	Visual	57-10-21
Bonded wing inspection and sealing*	Ultrasonic	57-10-21
Wing front spar lug inspection	Bolthole eddy current	57-10-22
Wing spar and lower skin inspection	Visual	57-10-23
Wheel well close-out	Visual	57-10-25
Wing to carry-through upper attachment fittings	Visual	57-10-26

*Tap test performed in lieu of prescribed ultrasonic inspection.
BL = body line

Table 2-6. Supplemental Fuselage Inspections

Title	Method of Inspection	SID Number
Fuselage left and right-hand channel assemblies	Surface eddy current	53-10-02

Table 2-7. Supplemental Horizontal Stabilizer and Elevator Inspections

Title	Method of Inspection	SID Number
Elevator torque tube assembly	Visual	27-30-01
Horizontal stabilizer spars and attachments	Visual	55-10-03
Horizontal stabilizer front spar upper cap	Bolthole eddy current	55-10-04
Horizontal stabilizer front spar lower cap	Bolthole eddy current	55-10-05
Horizontal stabilizer front spar attach BL 7.69	Bolthole eddy current	55-10-06
Horizontal stabilizer rear spar lower cap attach	Bolthole eddy current	55-10-07
Horizontal stabilizer rear spar upper cap BL 0.00	Bolthole eddy current	55-10-08
Horizontal stabilizer rear spar lower cap BL 0.00	Bolthole eddy current	55-10-09
Horizontal stabilizer rear spar angle attachment	Bolthole eddy current	53-10-03
Outboard elevator hinge bracket and attachment	Visual	55-20-01
Elevator hinges and fittings	Visual	55-20-02
Elevator hinges and fittings	Liquid penetrant	55-20-02

BL = Body line

Table 2-8. Supplemental Vertical Stabilizer and Rudder Inspections

Title	Method of Inspection	SID Number
Rudder structure	Visual	27-20-03
Rudder torque tube	Visual	27-20-04
Vertical stabilizer spars and attachments	Visual	55-30-01
Rudder hinges and fittings	Visual	55-30-02
Rudder hinges and fittings	Liquid penetrant	55-30-02
Vertical stabilizer rear spar cap attach, WL 108.38	Bolthole eddy current	55-30-04

WL = Water line

Table 2-9. Supplemental Main and Nose Landing Gear Inspections

Title	Method of Inspection	SID Number
Main gear actuator collar	Magnetic particle	32-10-04
Nose gear drag brace	Visual	32-20-00
Nose gear drag brace	Liquid penetrant	32-20-00
Nose gear attachment and wheel well structure	Visual	32-20-01
Nose gear fork	Surface eddy current	32-20-02
Upper barrel main gear	Magnetic particle	32-30-04
Nose gear trunnion inspection	Liquid penetrant	32-30-07
Nose gear steering bellcrank	Visual	32-50-00
Nose gear steering bellcrank	Liquid penetrant	32-50-00

2.4.1 Visual Supplemental Inspection Results.

Visual inspection is the original and most commonly used NDI method. It is the simplest to perform since it does not require additional equipment. The inspector simply looks at the inspection areas for surface damage. A 5 to 10 power hand-held magnifying glass is often used to detect smaller flaws. Since paint is rarely removed from the inspection area, the inspector must decide whether a crack is in the paint only, or if it extends into the underlying structure. The results of the visual supplemental inspections are listed in table 2-10. The most notable damage found was the wing to carry-through attachment fittings, which had either corrosion or damaged holes due to removal. Figure 2-10 shows the airplane location of the attachment fittings (P/Ns 5011023-1, 5011024-1, 0811350-7, and 0811350-8), while figure 2-11 shows the corrosion that was observed on one of the forward fittings. Due to limited access to the aft fittings during removal, some of the boltholes were damaged. Damage to these fittings is rather common. Figure 2-12 shows the damage induced on the aft attachment fittings during removal. The same type of damage occurred during the removal of the fittings on the Cessna 402A model.

Table 2-10. Results From the Visual Supplemental Inspections

SID Inspection Number	Name of Inspection	Discrepancy Reported
27-30-01	Elevator torque tube assembly	None
55-10-03	Horizontal stabilizer spars/attachments	None
55-20-01	Outboard elevator hinge bracket and attachment	None
55-20-02	Elevator hinges and fittings	None
27-20-03	Rudder structure	Paint scratches and corrosion
27-20-04	Rudder torque tube	None
55-30-01	Vertical stabilizer spars/attachments	None
55-30-02	Rudder hinges and fittings	None

Table 2-10. Results From the Visual Supplemental Inspections (Continued)

SID Inspection Number	Name of Inspection	Discrepancy Reported
27-10-05	Aileron hinges and fittings	None
54-10-03	Engine beams	Skin crack 0.82 inch (Also found by eddy current)
57-10-18	Wing aft auxiliary spar lower cap	None
57-10-19	Wing rear spar lower cap at spar splice	None
57-10-21	Bonded wing inspection/sealing	None
57-10-23	Wing spar/lower skin inspection	None
57-10-25	Wheel well close-out	None
57-10-26	Wing to carry-through upper attachment fittings	Corrosion and damaged holes due to removal
32-20-00	Nose gear drag brace	None
32-20-01	Nose gear attachment/wheel well structure	None
32-30-06	Main/nose gear retraction system teardown and inspection	Corroded fittings and missing paint
32-50-00	Nose gear steering bellcrank	None

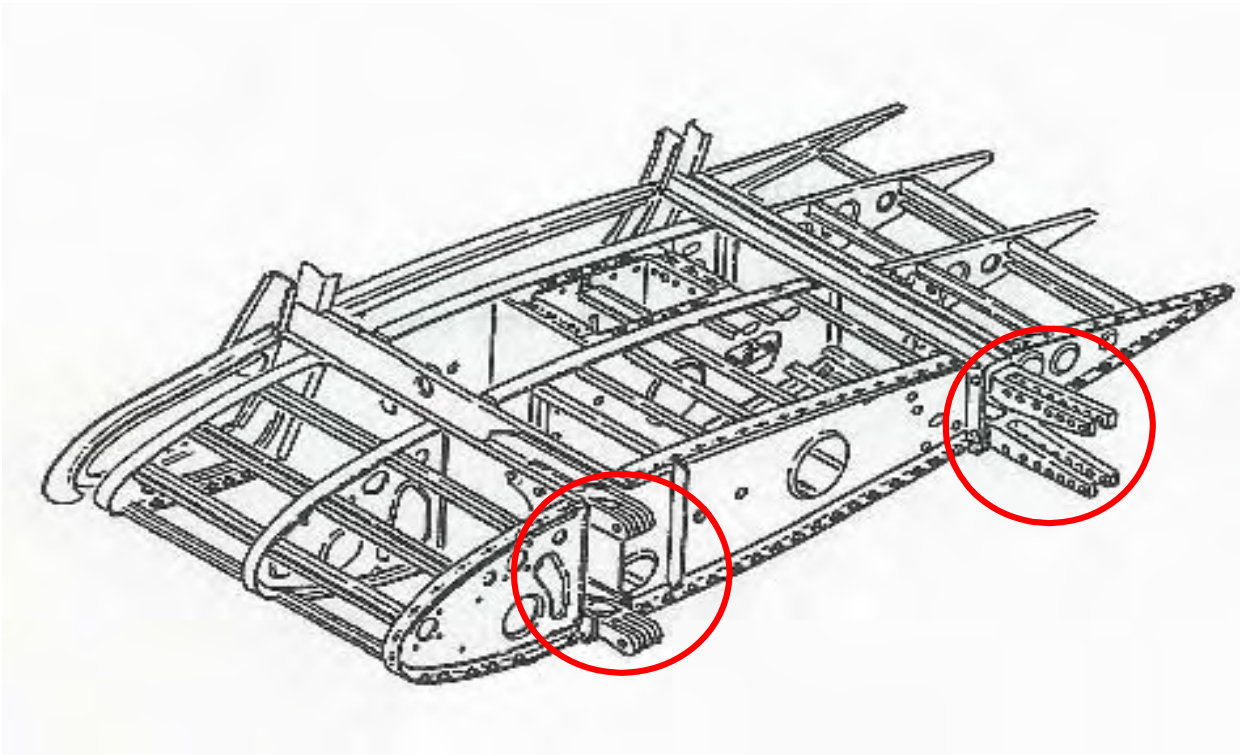

Figure 2-10. Location of the Stub Wing Spar Attachment Fittings

Figure 2-11. Corrosion on the Stub Wing Spar Attachment Fittings

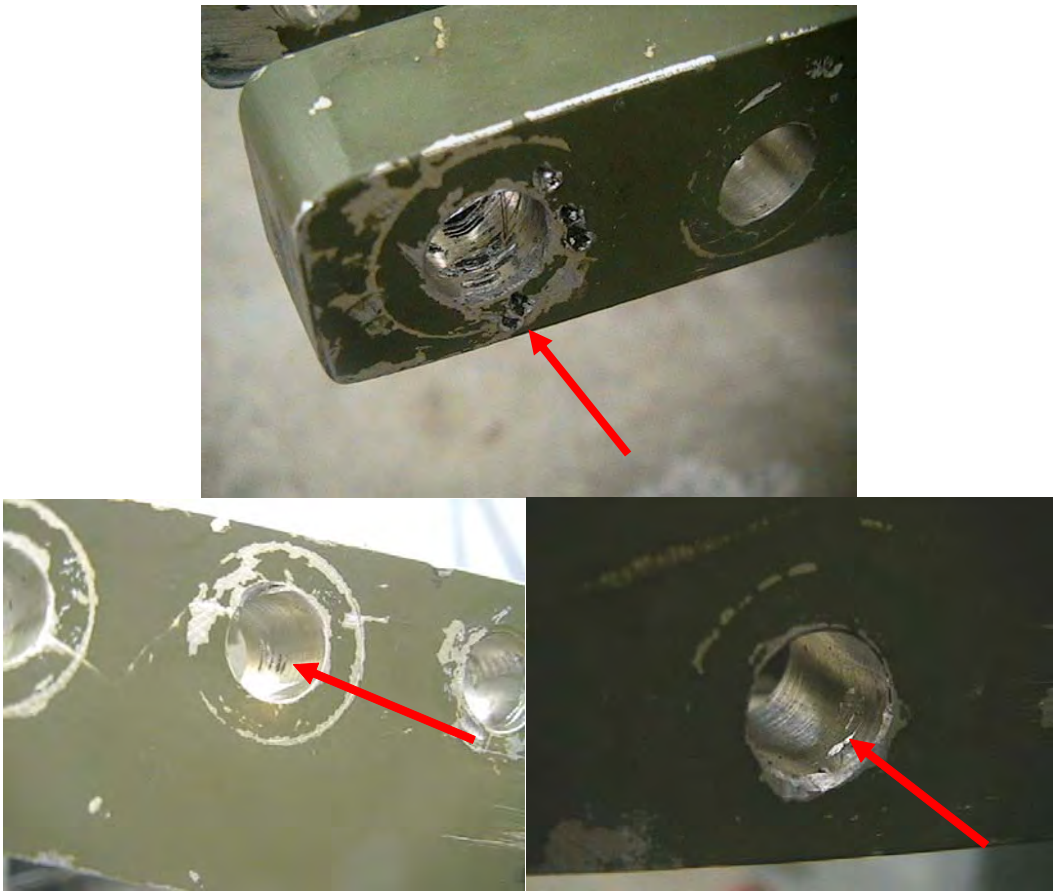

Figure 2-12. Damage Induced on the Stub Wing Attachment Fittings During Removal

2.4.2 Fluorescent Liquid Penetrant Supplemental Inspection Results.

The fluorescent liquid penetrant inspection is a three-step process, as shown in figure 2-13 [3].

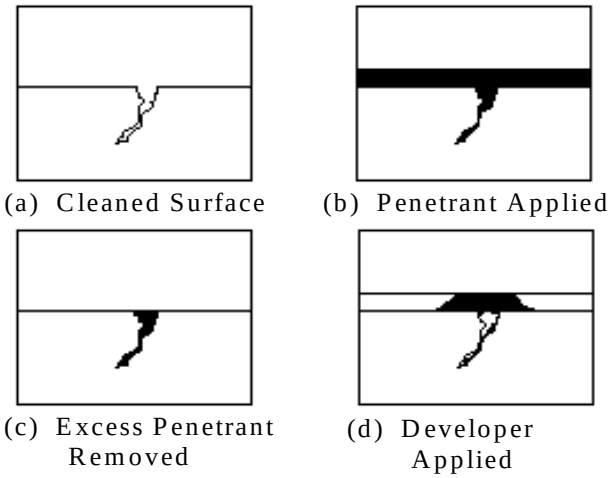

Figure 2-13. Penetrant Inspection Process

Penetrant inspections tend to take longer than visual or eddy current to perform since surfaces must be stripped of paint before this inspection can be conducted. A penetrating liquid is placed on the surface of the part, and this liquid penetrates into the cavity formed by a discontinuity, such as a crack, in the material. The surface liquid is then removed gently to avoid disturbing the penetrant that settled in the discontinuity. The liquid left in the cavity is brought back to the surface with the application of a developer. A black light is used to view the flaw if a fluorescent penetrant is used. Fluorescent penetrant is limited to surface flaws and requires about 20 minutes of inspection preparation. Fluorescent penetrant is widely used because it is a relatively simple and inexpensive process, but the process is highly dependent on following established procedures to detect discontinuities in the material. Table 2-11 shows the results of the liquid penetrant supplemental inspections, which included the inspection of elevator hinges and fittings. Although the SID inspection did not require the inspection of the supporting structure, while performing the inspection of the elevator attach fitting, the inspectors did notice a 0.25-inch crack in a bracket supporting the attach fitting. Figure 2-14 shows the location of the 0.25-inch crack in the bracket, while figure 2-15 shows the crack.

Table 2-11. Results From the Fluorescent Penetrant SID Inspections

SID Inspection Number	Name of Inspection	Discrepancy Reported
55-20-02	Elevator hinges and fittings	0.25-inch crack in support bracket, no defect on hinges or fittings

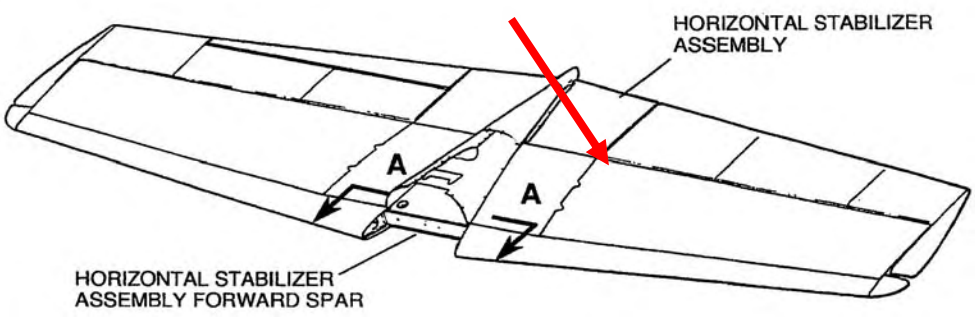

Figure 2-14. Location of Crack on the Bracket Supporting the Left Inboard Elevator Attach Fitting

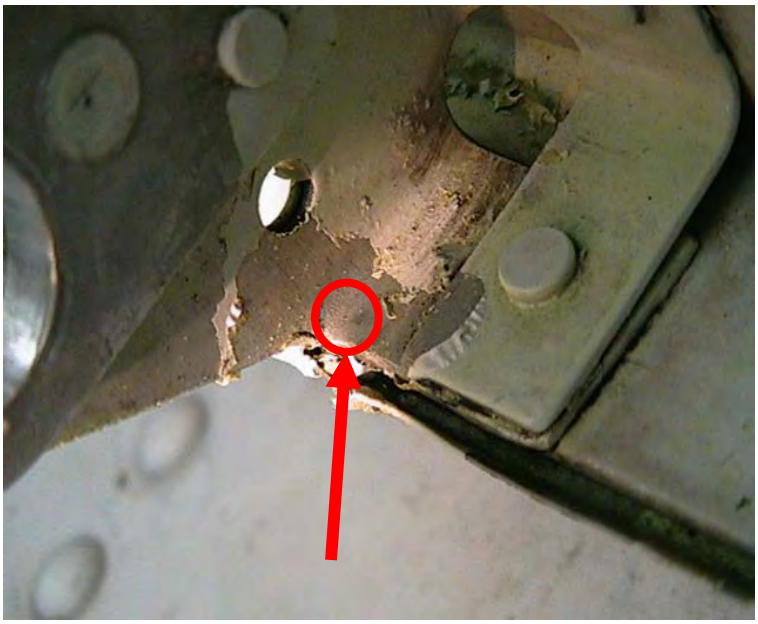

Figure 2-15. Crack in the Bracket Supporting the Left Inboard Elevator Attach Fitting

2.4.3 Magnetic Particle Supplemental Inspection Results.

Magnetic particle inspections consist of three basic steps: The first step is to magnetize the part. Then, magnetic particles, such as iron filings, are sprayed onto the part. These particles are the media through which the flaws become visible. In the final step, a qualified inspector interprets the indications. Fluorescent magnetic particles are most commonly used for airplane inspections. Figure 2-16 [3] shows a typical indication of a surface crack. Magnetic particle inspection is easy to perform, requires minimal training, and results can be achieved quickly. However, it is limited to relatively small inspection areas comprised of a magnetic material. Only the main landing gear side brace actuator collar and upper barrel were inspected during the magnetic particle supplemental inspections and no relevant indications were detected.

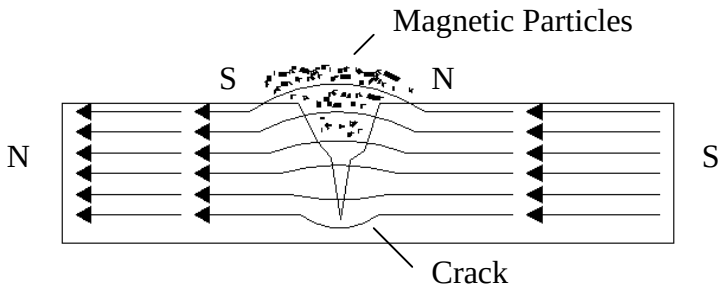

Figure 2-16. Surface Crack Indications

2.4.4 Eddy-Current Supplemental Inspection Results.

The basic setup for an eddy-current probe is shown in figure 2-17 [3]. A primary magnetic field created by alternating current causes the current to flow in a circular direction, known as eddy currents. In order for the current to flow, the test part must be made of conductive materials. A secondary magnetic field forms in the part and opposes changes to the primary magnetic field. Changes in material properties alter the eddy currents, which in turn changes the opposing secondary magnetic field. This change alters the electrical characteristics of the primary magnetic field, which can be detected by the eddy-current instrument. Interpretation of the electrical signals requires experienced inspectors.

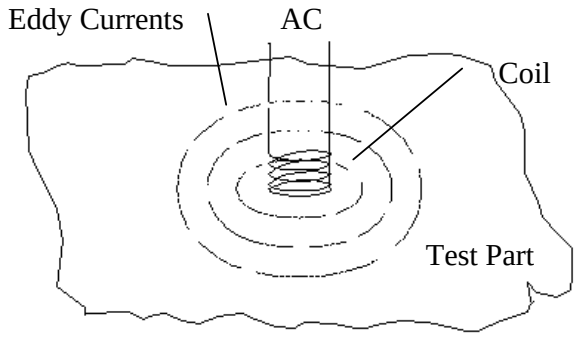

Figure 2-17. Eddy-Current Probe

A majority of the supplemental inspections were performed using the eddy-current method. Table 2-12 shows the results from the eddy-current supplemental inspections. Figures 2-18 and 2-19 show the location and the actual 0.82-inch crack on a flange (P/N 5650204-14) on the right wing outboard engine beam. Two skin cracks were found during SID 55-10-04, which was an inspection of the center section of the horizontal stabilizer front spar upper cap, shown in figure 2-20. Figures 2-21 and 2-22 show a 0.0625- and a 0.031-inch crack in the skin covering the horizontal stabilizer front spar upper cap (P/N 5032001-11). An out-of-round hole was found on the horizontal stabilizer front spar web (P/N 5032001-11), as shown in figures 2-23 and 2-24. The inspection area of the horizontal stabilizer rear spar upper cap, shown in figure 2-25, revealed a 0.125-inch skin crack in a fastener hole chamfer, seen in figure 2-26. Figure 2-27 shows the inspection area of SID 57-10-14, while figure 2-28 shows cracked and shorn boltholes found in a wing attachment fitting (P/N 0822550-21). A 2.25-inch crack was found during

inspection of the wing attachment fitting boltholes in an angle common to the outboard right stub wing rib and carry-through structure, as shown in figure 2-29. Three fastener holes inspected on the left wing front spar lower cap (P/N 5222011-1) are shown in figure 2-30. These fastener holes exhibited crack-like indications. Figure 2-31 shows skin cracks found at two of these fastener holes causing the eddy-current indications. The other hole was investigated further during the microscopic examination phase. The location of crack indications found in the left wing aft auxiliary spar lower cap (P/N 5122040-3) is shown in figure 2-32.

Table 2-12. Results From the Eddy-Current SID Inspections

SID Inspection Number	Name of Inspection	Discrepancy Reported
54-10-03	Engine beam	0.82-inch crack in flange
55-10-04	Horizontal stabilizer front spar upper cap	0.0625-inch crack in skin BL 7.5
55-10-04	Horizontal stabilizer front spar upper cap	0.031-inch crack in skin BL 8.0
55-10-06	Horizontal stabilizer front spar attach BL 7.69	Out of round hole BL 7
55-10-08	Horizontal stabilizer rear spar upper cap	0.125-inch skin crack in fastener hole chamfer BL 1
57-10-14	Wing carry-through front spar lower cap	Cracked and shorn boltholes in attachment fittings
57-10-14	Wing carry-through front spar lower cap	2.25-inch crack in angle common to the carry-through and right stub wing rib BL 54.25
57-10-16	Wing front spar lower cap inspection and modification	Crack indication left wing WS 67
57-10-16	Wing front spar lower cap inspection and modification	0.097-inch skin crack left wing WS 114.5
57-10-16	Wing front spar lower cap inspection and modification	0.097-inch skin crack left wing WS 114.5
57-10-16	Wing front spar lower cap inspection and modification	0.0625-inch skin crack left wing WS 114.5
57-10-16	Wing front spar lower cap inspection and modification	0.0625-inch skin crack left wing WS 87
57-10-16	Wing front spar lower cap inspection and modification	0.625-inch skin crack left wing WS 87
57-10-18	Wing aft auxiliary spar lower cap	Crack indication in left wing WS 99

WS = Wing station
BL = Body line

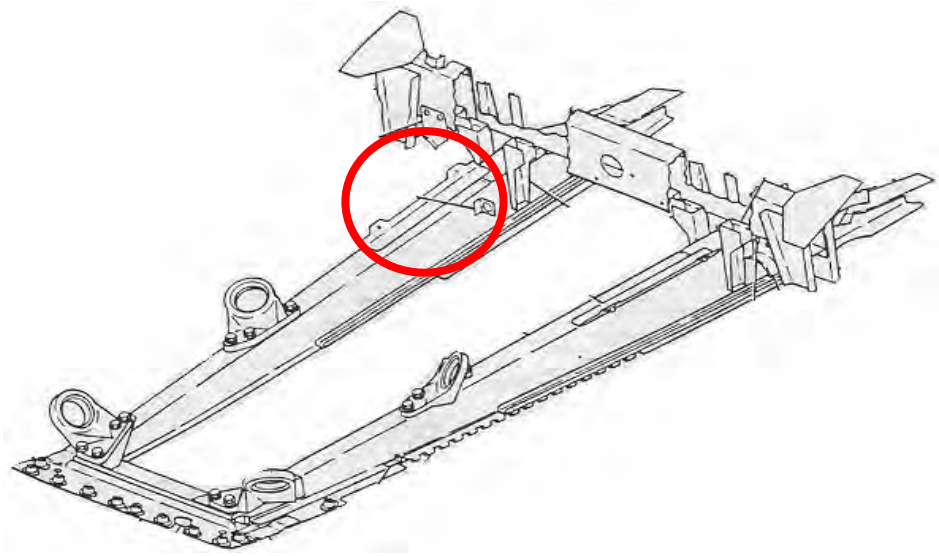

Figure 2-18. Location of Cracked Flange on the Right Wing Outboard Engine Beam

Figure 2-19. Crack on the Right Wing Outboard Engine Beam

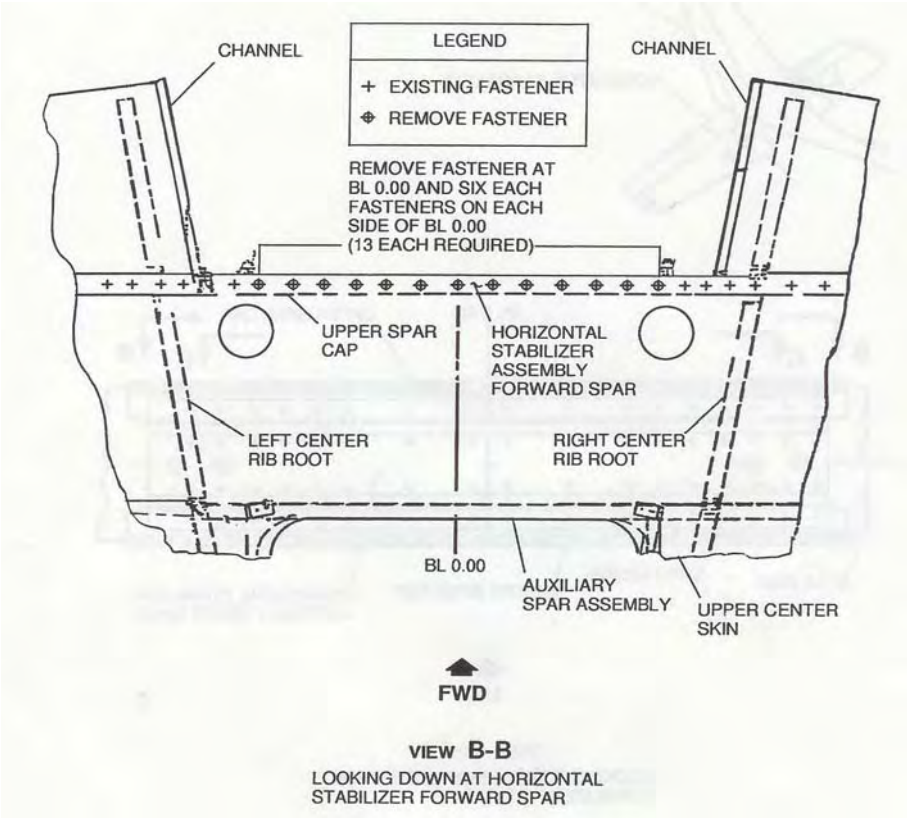

Figure 2-20. Center Area of the Horizontal Stabilizer Front Spar Upper Cap

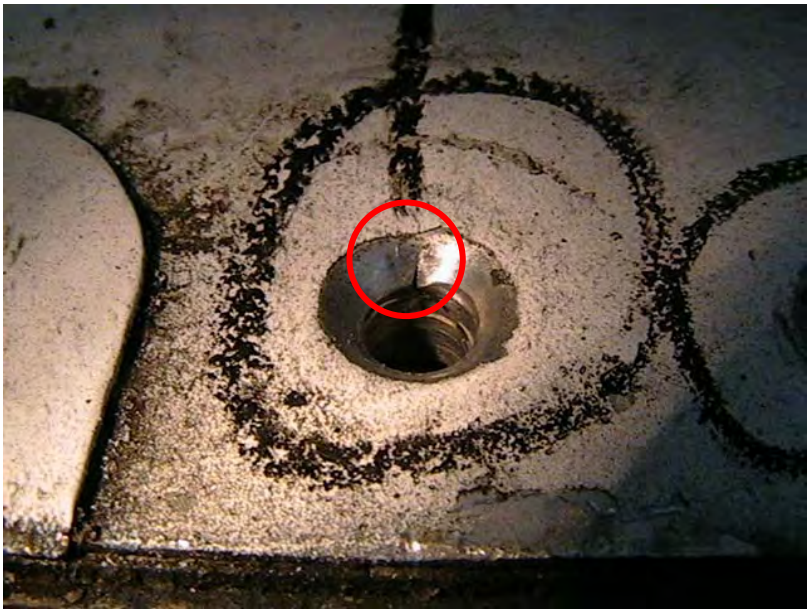

Figure 2-21. A 0.0625-Inch Skin Crack on the Horizontal Stabilizer Center Upper Skin

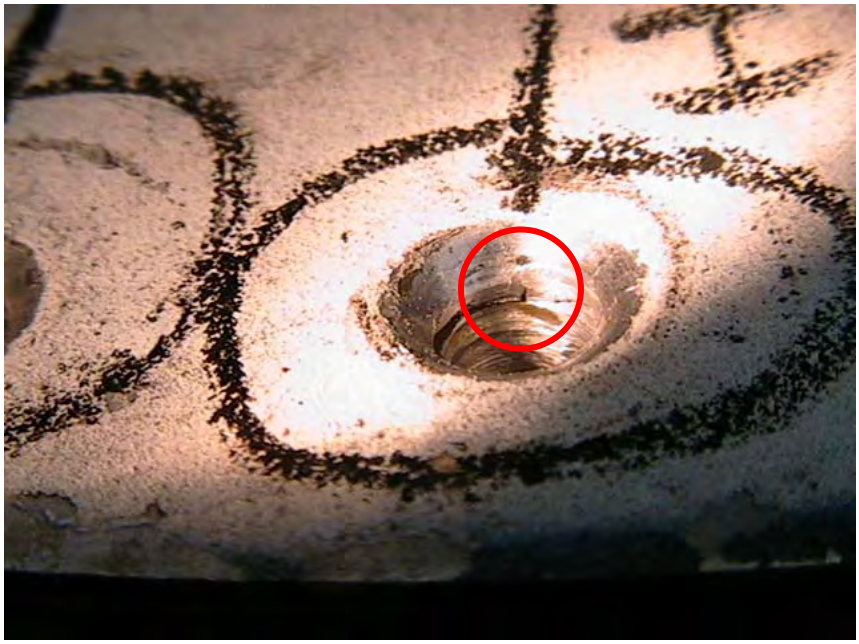

Figure 2-22. A 0.031-Inch Skin Crack on the Horizontal Stabilizer Center Upper Skin

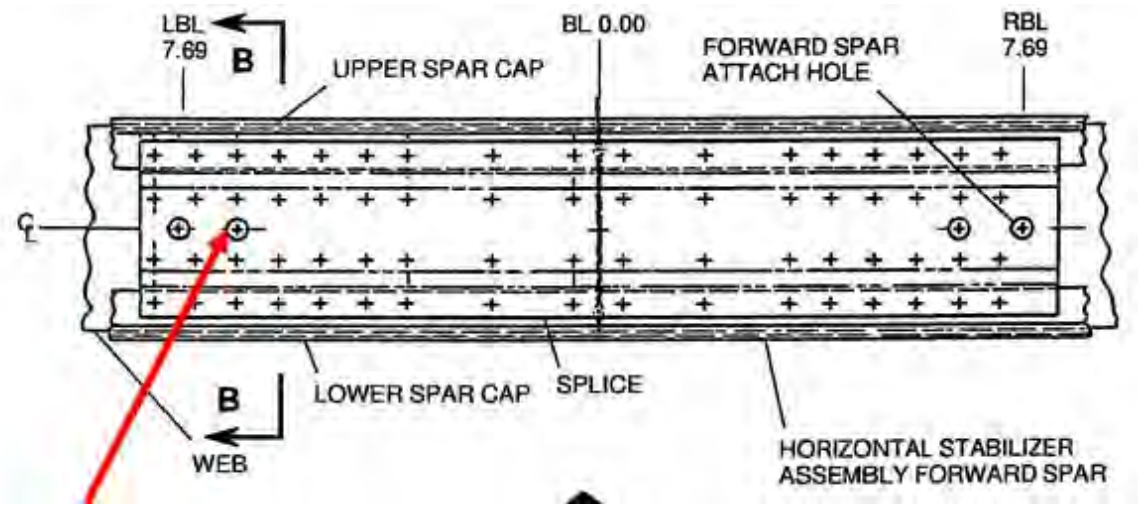

Figure 2-23. Location of Out-of-Round Hole on the Horizontal Stabilizer Front Spar Web

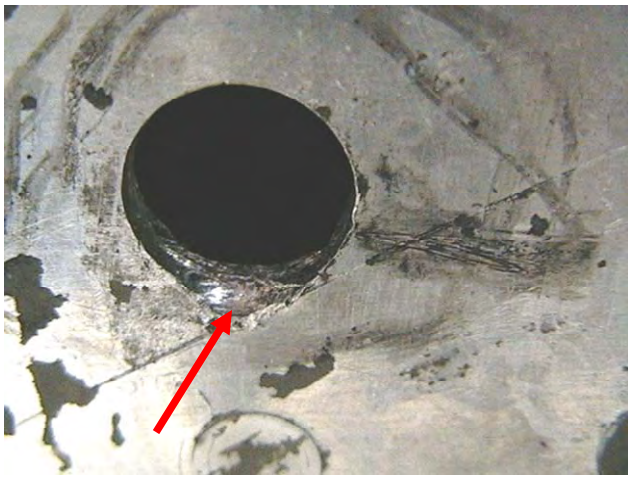

Figure 2-24. Out-of-Round Hole on the Horizontal Stabilizer Front Spar Web

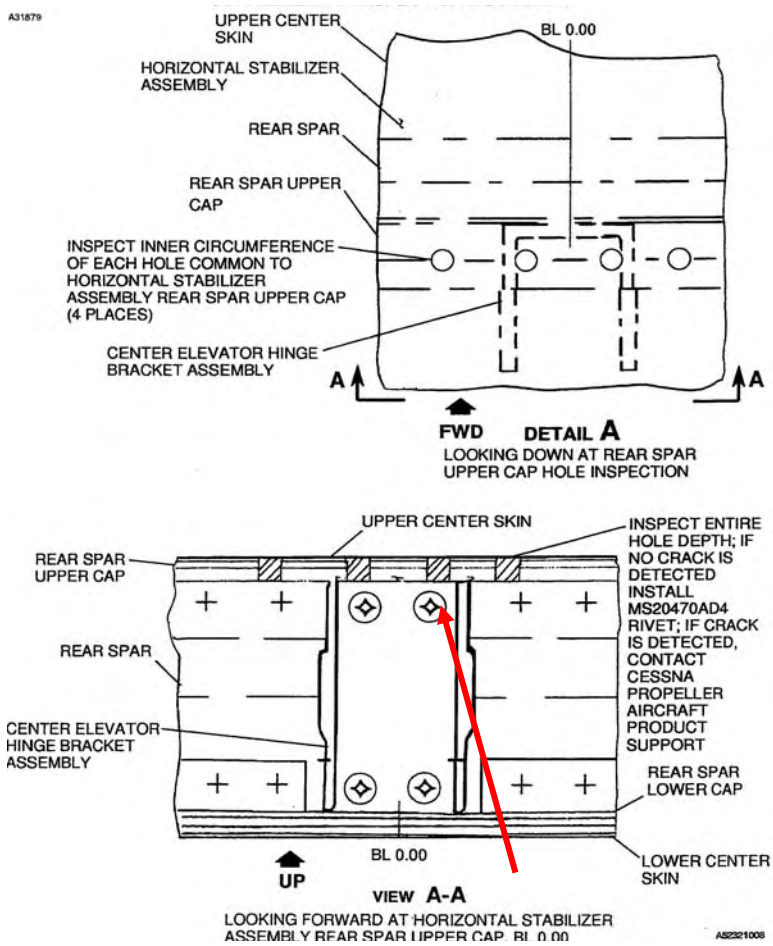

Figure 2-25. Location of Defect in the Horizontal Stabilizer Center Skin

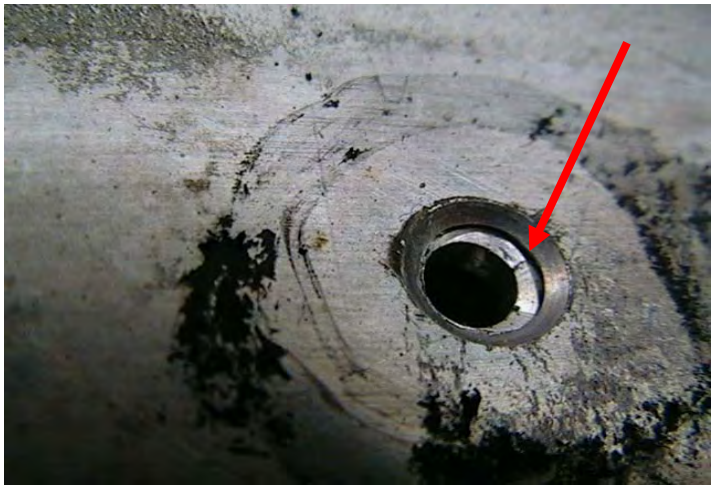

Figure 2-26. Skin Crack in the Fastener Hole Chamfer

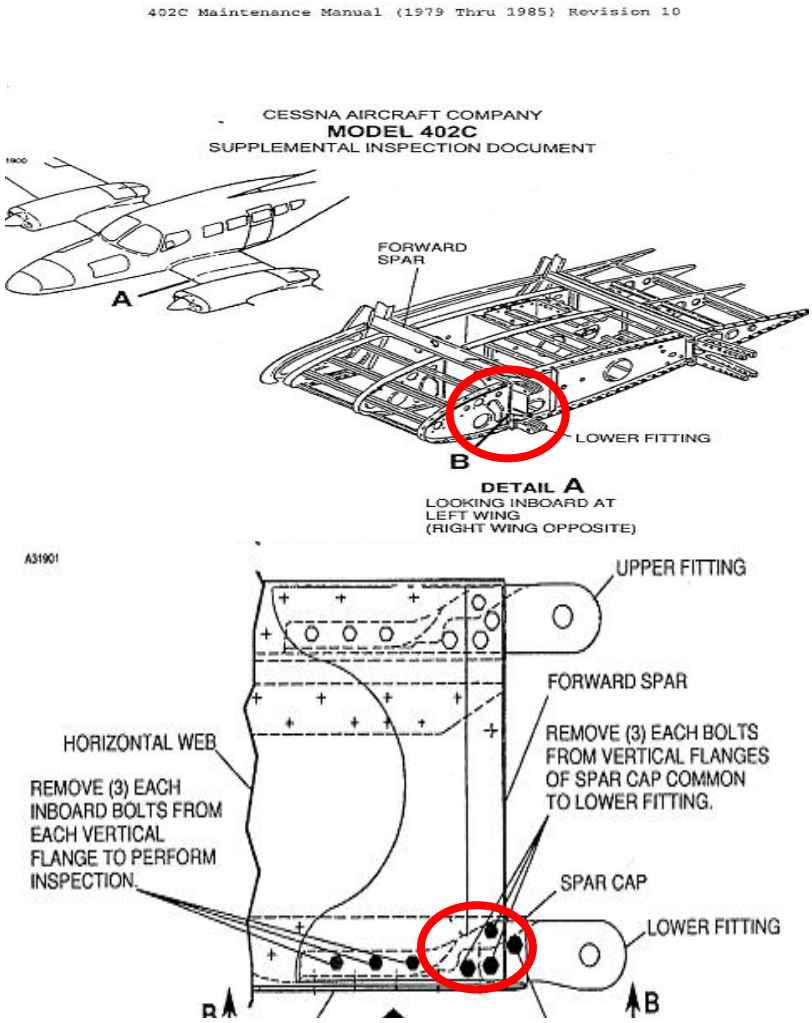

Figure 2-27. Inspection Area of Wing Attach Fitting Boltholes

Figure 2-28. Cracked and Shorn Boltholes

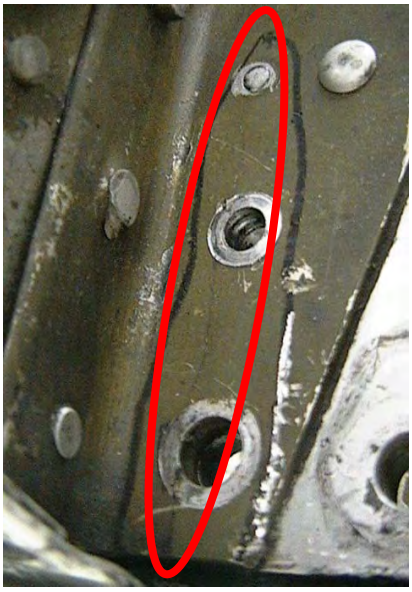

Figure 2-29. Crack in the Angle Common to the Right Stub Wing Rib and Carry-Through Structure

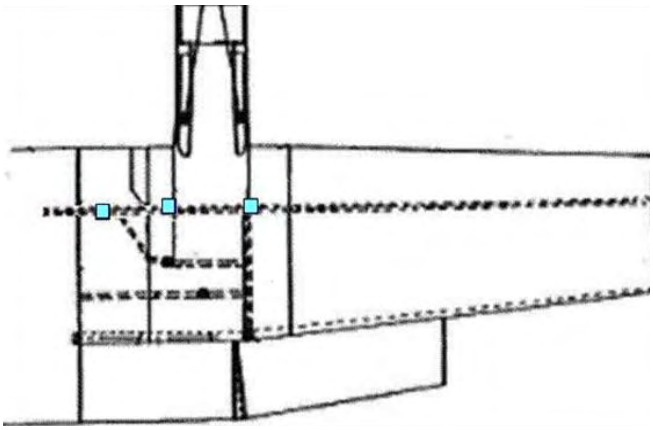

Figure 2-30. Location of Crack Indications on the Left Wing Lower Front Spar Cap

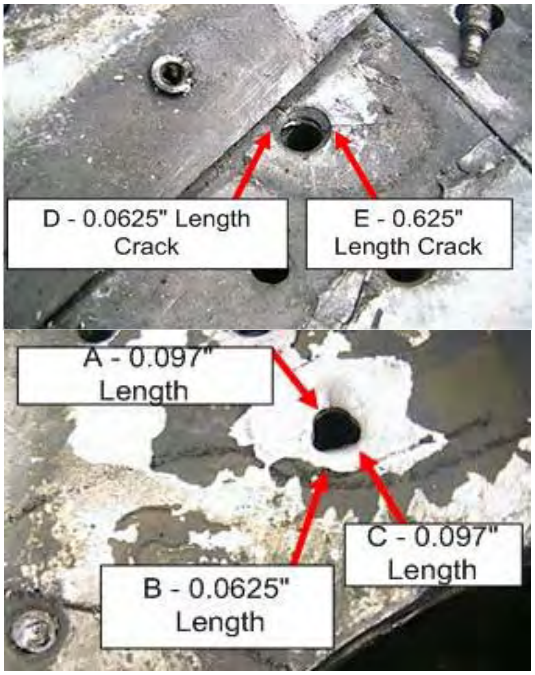

Figure 2-31. Cracks on the Skin Covering the Left Wing Lower Front Spar Cap

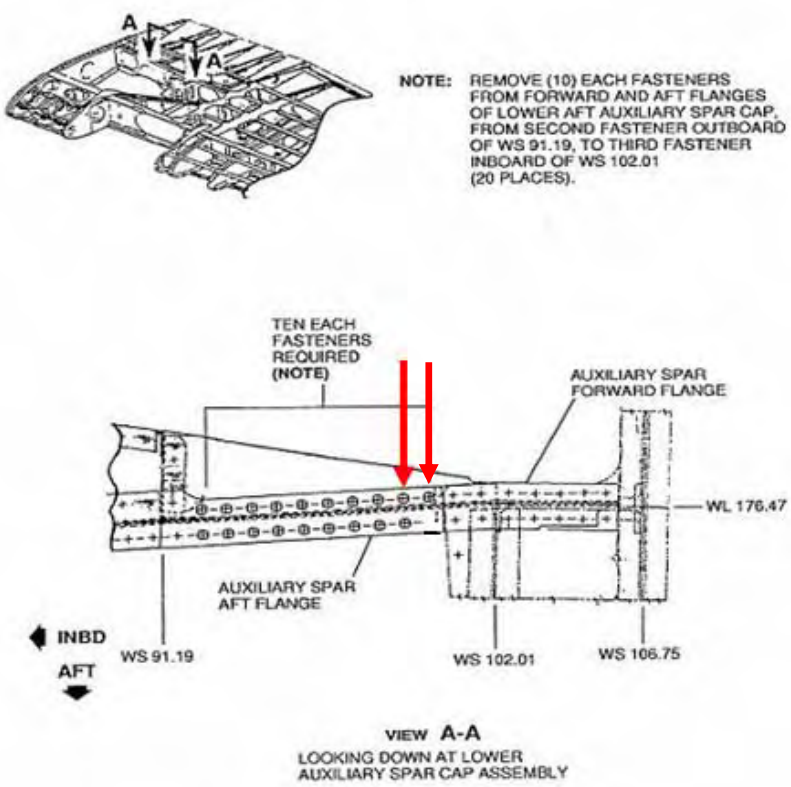

Figure 2-32. Location of Crack Indications in the Left Wing Lower Aft Auxiliary Spar Cap

2.4.5 Ultrasonic Supplemental Inspection Results.

Due to the unavailability of the highly specialized Bond Master ultrasonic inspection system, the decision was made to use tap testing to check bond integrity during SID 57-10-21 on the Cessna 402C. Tap testing is a fast and accurate testing method for detecting debonding. Tap testing consists of lightly tapping the surface of a part with a coin or special hammer. A flat or dead response is considered unacceptable. Acceptable areas respond to tapping with a sharp echo similar to tapping glass. The areas of inspection for debonding include the upper and lower wing skins over the front and rear spar caps inboard and outboard of the nacelle structure, as shown in figure 2-33. One disbond indication was found on the left wing upper skin trailing edge at wing station (WS) 211.

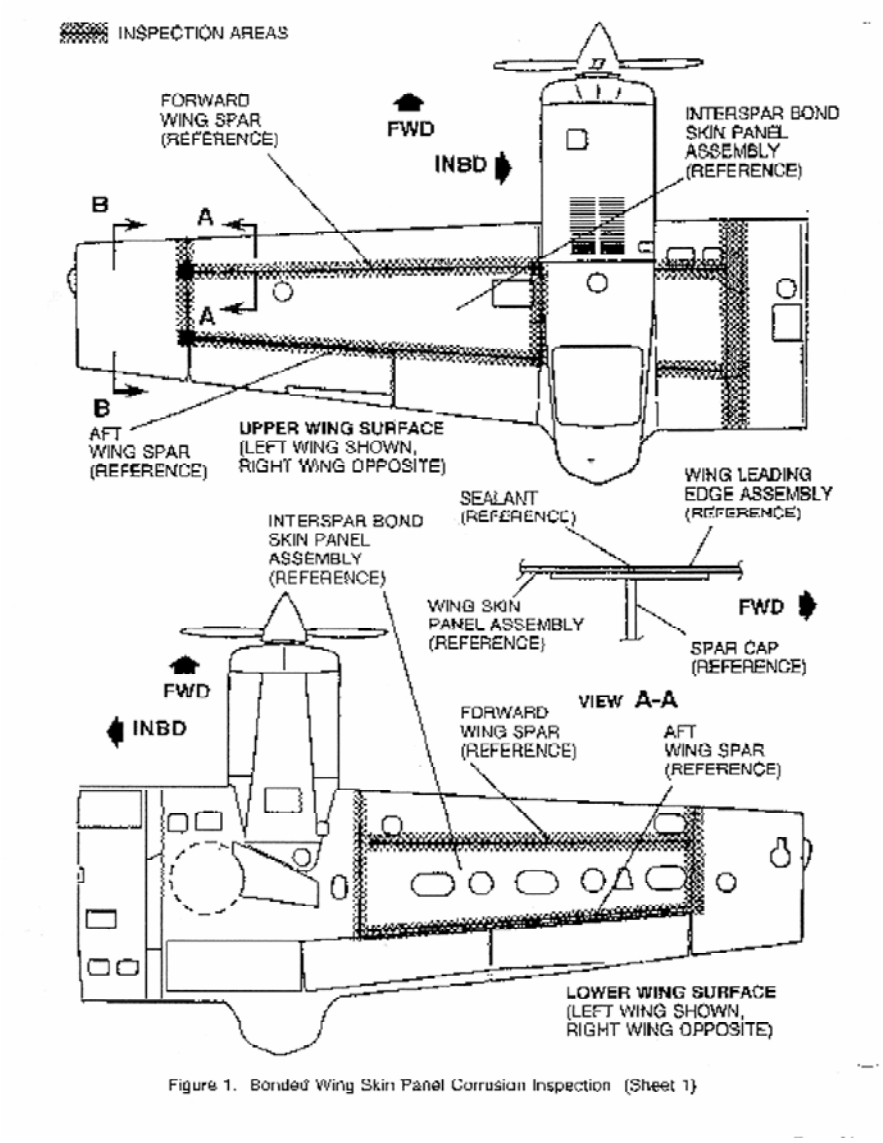

Figure 2-33. Inspection Areas for SID 57-10-21

3. TEARDOWN EXAMINATION PHASE.

Following the completion of the inspection phase, the teardown examination phase was performed to find defects not found by typical maintenance or supplemental inspections. Every defect found in the inspection phase and the teardown examination phase was completely characterized during the microscopic examination portion of this project. The airplane was first disassembled into the major airplane sections, including the wings, forward fuselage, aft fuselage, cabin, landing gear, horizontal stabilizer, and vertical stabilizer. The systems' components were then inspected both on the airplane and, if necessary, after removal. Alternative NDI techniques were used to examine the wing spars, fuselage channels, and the horizontal and vertical stabilizer spars to find additional defects in the airframe prior to disassembly. Following the alternative NDI, the major airplane sections were disassembled to remove the critical structural details and suspect locations identified during inspections. These details were then examined microscopically to find and characterize all the defects. Certain cracks and areas of corrosion were sectioned and mounted for fractographic analysis to further determine the extent of the flaw and the mode of failure for cracks (i.e., fatigue, stress corrosion cracking).

3.1 DISASSEMBLY OF AIRPLANE INTO MAJOR AIRPLANE SECTIONS.

To facilitate the alternative NDI and detailed disassembly, the airplane was disassembled per the Cessna 402C Maintenance Manual [1] into its major airframe sections: wings, horizontal and vertical stabilizers, landing gear, forward fuselage, aft fuselage, and cabin. Prior to any disassembly of the airplane into sections, the engines were removed and were not investigated as part of this program. The systems' components were also removed for inspection. All disassembly was done as carefully as possible to minimize damage to the wiring, systems components, and the underlying structure of the airplane.

3.2 INSPECTION OF SYSTEMS' COMPONENTS.

As airplanes age, degradation of mechanical systems may occur. This degradation must be considered when designing airplane components. All mechanical system parts on the Cessna 402C airplane were visually inspected for signs of degradation during the disassembly. These mechanical systems included flight control cables and linkages, landing gear actuators, combustion heater, flap actuators, and pressurized lines. The only discrepancies noted were the repaired exhaust pipe and leaking hydraulic flow pressure switch found in the visual inspection phase and leaking lines found during the pressure leak check.

As airplanes are operated, the pressurized lines encounter conditions that may initiate corrosion or cracking. This degradation of the lines, when allowed to mature, may create a hole in the line from which the pressurized contents may escape. If a leak occurs, severe consequences may ensue with regard to the safety of the airplane. Pressurized lines are designed to withstand their predicted operating environment over the lifetime of the line. To determine the severity of the degradation in pressurized lines, a test was developed to look for leaks in the tubing by constructing a pressurization system for pressurizing the lines in a consistent and reproducible manner. Figure 3-1 illustrates the pressurization system.

Figure 3-1. Apparatus Used to Pressurize Lines

This pressurization system takes air at an unknown pressure from a standard pressure line and regulates it to a known pressure. This regulated pressure is then sent into the pressure line being tested. The pressurization system consists of the following:

- Pressure Control Apparatus
  - Universal quick couplers are used to carry pressurized air into and out of the regulator.
  - The pressure regulator is model number 4ZM08 built by Speedaire. The maximum inlet pressure is 300 psi, while maximum outlet pressure is 125 psi.
  - A pressure gauge is attached to the front of the regulator. The pressure is varied by adjusting the knob at the top of the regulator until the desired pressure is read off of the gauge. Pressures are always approached from the negative direction.
  - A 4-inch metal nipple takes the air out of the universal quick coupler and into the air chuck.
  - All threaded connections are wrapped with Teflon tape.
- Tire Stem
  - Tire stems are used to carry the pressurized air from the air chuck into the tubing.
  - The tire stems have a mushroom-shaped rubber outlet that can form an airtight seal over a variety of tubing sizes.
  - For very small tubing, a cork is inserted into the end of the tire stem. This cork has a small hole drilled into it, which effectively reduces the exit area of the stem and allows a seal to be formed with smaller tubing.
- Corks
  - Corks are inserted in the opposite end of the tubing to seal the system.

The process for testing the lines is described below.

- Debris that could obscure or block leaks is removed.
- The part number is recorded in the test log, and a visual inspection was performed to look for cracks or areas of corrosion that may be indicative of a leaking line.
- A cork is firmly placed in one end of the tube, as illustrated in figure 3-2.
- On the other end of the tube, the pressurization apparatus is attached, as shown in figure 3-3. The regulated pressure is 20 psi ±1.
- Soapy water is sprayed over the pressurized line while in the airplane, and the presence of bubbles indicates a leak in the line.
- Two people perform the test. One person controls the pressurization system, while the other watches for bubbles emitting from the tubing. Any areas of interest are noted in the test log. If leaks are detected, the line is retested after removal from the airplane.

Figure 3-2. Cork Placed in the End of a Tube

Figure 3-3. Pressurization of Tubing

Table 3-1 shows the results of the pressurized line test. All six lines were cabin vent lines. Figures 3-4 to 3-8 show the five leaking lines, while figure 3-9 shows one air line with pitting that could cause leaking in the future as the corrosion progresses.

Table 3-1. Inspection Results of Cabin Air Lines

Part Number	Visual	Leak	Description
35-20-00 #107	Broken (two pieces)	Yes	Corrosion 0.310 inch
35-20-00 #85	Hole	Yes	Corrosion 0.165 square inch
35-20-00 #75	Multiple (three) holes	Yes	Corrosion 0.222 square inch
35-10-00 #76	Hole	Yes	Corrosion 0.800 square inch
35-20-00 #103A	Hole	Yes	Corrosion 0.163 square inch
35-20-00 #81	Pitting	No	Corrosion 0.166 square inch

Figure 3-4. Vent Line 35-20-00 #107 Severed in Airplane

Figure 3-5. Vent Line 35-20-00 #85 Found Cracked During Visual Inspection

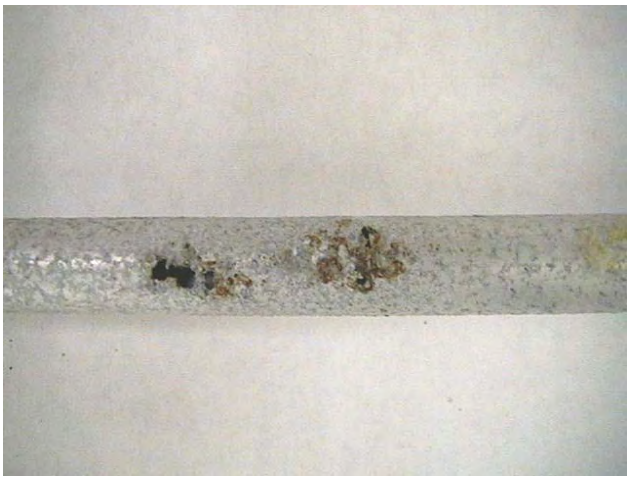

Figure 3-6. Vent Line 35-20-00 #75 Found With Pitting

Figure 3-7. Vent Line 35-10-00 #76 Corroded

Figure 3-8. Vent Line 35-20-00 #103 Cracked

Figure 3-9. Vent Line 35-20-00 #81 Found With Corrosion

3.3 STRUCTURAL ASSESSMENT USING ALTERNATIVE NDI TECHNIQUES.

During this research program, alternative NDI techniques were implemented to assess the primary airplane structure beyond the supplemental inspections prior to teardown. The wing spars, fuselage channels, and horizontal and vertical stabilizer spars were inspected using three eddy-current-based inspection techniques capable of detecting surface and subsurface cracks and areas of corrosion. The Magneto-Optic-Imager (MOI) unit, demonstrated in figure 3-10, is capable of detecting cracks in multiple layers, as well as surface and interlayer corrosion. The sliding probe, shown in figure 3-11, detects cracks in up to three layers of metal, while the spot probe, shown in figure 3-12, can detect corrosion in multiple layers. Even though the pencil probe is considered a commonly used technique, this technique was used to expand the inspection area for engine beams.

The primary purpose of these inspections was to find additional defects in the airframe using alternative NDI techniques prior to disassembly. These techniques are not called out in the Cessna 402C SID; therefore, no procedures had been established or validated for using these techniques on the Cessna 402C. Using existing structure and locally manufactured calibration standards, inspectors attempted to identify target areas for further microscopic examination. No effort was made to evaluate the capabilities of the alternative NDI techniques, and conclusions about the capabilities of MOI, sliding probe, or spot probe should not be made from the results presented in this report.

Figure 3-10. Demonstration of the MOI Instrument

Figure 3-11. Demonstration of the 1- to 100-kHz Sliding Probe

Figure 3-12. Demonstration of the Spot Probe

Instrument settings, which are determined by a number of factors, including material composition, number of material layers, and desired signal penetration depth, are an important factor when performing eddy-current-based inspections. Table 3-2 shows the machine settings used during these inspections. The results of these inspections are presented in tabular and pictorial format in the subsequent sections for the left and right wings, fuselage channels, and horizontal and vertical stabilizers. The color-coded key for the pictorial format is shown in figure 3-13. The severity of all corrosion indications was approximated by percentage of thickness lost and included in the subsequent tables.

Table 3-2. Alternative NDI Machine Settings

Method	Frequency	Mode	Gain
MOI	5 kHz	Circular	Medium
Sliding probe	3 kHz	Single frequency	75 dB
Spot probe	3 kHz, 1.5 kHz	Dual frequency	75 dB

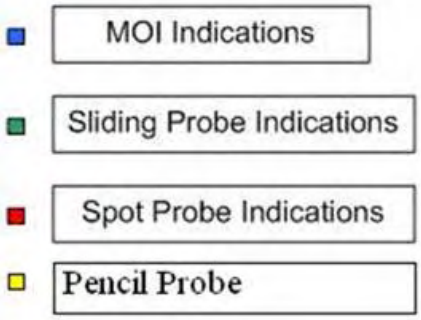

Figure 3-13. Key for All NDI Location Figures

3.3.1 Left Wing Results.

The upper and lower surfaces of the front and rear spars of the left wing were inspected for surface and subsurface cracks and areas of corrosion using the MOI, sliding probe, and spot probe. Both engine beams were inspected using a surface eddy-current pencil probe. Although the pencil probe is a commonly used technique for small airplanes, this inspection was considered an alternate inspection since the area of inspection was broadened from the engine beam SID inspection. All indications were further investigated during the microscopic examination. Table 3-3 lists all crack and corrosion indications encountered during the alternative NDI of the left wing. Figures 3-14 and 3-15 show the locations of indications found on the upper and lower surfaces of the left wing, respectively. Large amounts of corrosion were indicated on the lower surface of the left wing rear spar. Other indications of cracks and areas of corrosion were isolated along the front spar and upper surface of the rear spar. An overview of cracks in the left wing engine structure is shown in figure 3-16. Two cracks, shown in figure 3-17, were found on P/N 5654109-5 during the surface eddy-current scan of the engine beam, while figure 3-18 shows cracks found on P/N 5654109-5.

Table 3-3. Alternative NDI Indications on the Left Wing

NDI Method	Indication	Location
Surface and bolthole eddy current	0.42-inch crack	Left engine beam
Surface and bolthole eddy current	0.27-inch crack	Left engine beam
Surface and bolthole eddy current	0.43-inch crack	Left engine beam
Surface and bolthole eddy current	0.12-inch crack	Left engine beam
Spot probe	Corrosion 30% or air gap	LW lower rear WS 63-66
Spot probe	Corrosion 20%	LW lower rear WS 76.5
Spot probe	Corrosion 20%	LW lower rear WS 78
Spot probe	Corrosion 20%	LW lower rear WS 85
Spot probe	Corrosion 20%	LW lower rear WS 100
Spot probe	Corrosion 20%	LW lower rear WS 108
Spot probe	Corrosion 20%	LW lower rear WS 112
Spot probe	Corrosion 20%	LW lower rear WS 123
Spot probe	Corrosion 10%	LW lower rear WS 136
Spot probe	Corrosion 30%	LW lower rear WS 150
Spot probe	Corrosion 30%	LW lower rear WS 155
MOI	Corrosion 25%	LW lower rear WS 164
MOI	Corrosion 20%	LW lower rear WS 164
Spot probe	Corrosion 30%	LW lower rear WS 166
MOI	Crack indication	LW lower rear WS 179
Spot probe	Corrosion 30%	LW lower rear WS 188
MOI	Corrosion 20%	LW lower rear WS 191
Spot probe	Corrosion 10%	LW lower rear WS 194
MOI	Corrosion 10%	LW lower rear WS 202
Spot probe	Corrosion 20%	LW lower rear WS 210
Spot probe	Corrosion 10%	LW lower rear WS 214
Spot probe	Corrosion 10%	LW lower rear WS 220
Spot probe	Corrosion 30%	LW lower rear WS 229

Table 3-3. Alternative NDI Indications on the Left Wing (Continued)

NDI Method	Indication	Location
Sliding probe	Crack indication	LW upper rear WS 124
MOI	Crack indication	LW upper rear WS 142
MOI	Crack indication	LW upper rear WS 146
MOI	Corrosion 20%	LW upper rear WS 197
MOI	Corrosion 20%	LW upper rear WS 201
Spot probe	Corrosion 20%	LW upper rear WS 220
MOI	Corrosion 30%	LW lower front WS 84
Spot probe	Corrosion 30%	LW lower front WS 145
Spot probe	Corrosion 30%	LW lower front WS 147
Spot probe	Corrosion 15%	LW upper front WS 64
Spot probe	Corrosion 30%	LW upper front WS 68
Spot probe	Corrosion 20%	LW upper front WS 116
Spot probe	Corrosion 20%	LW upper front WS 197
Spot probe	Corrosion 20%	LW upper front WS 205
Spot probe	Corrosion 15%	LW upper front WS 211

LW = Left wing

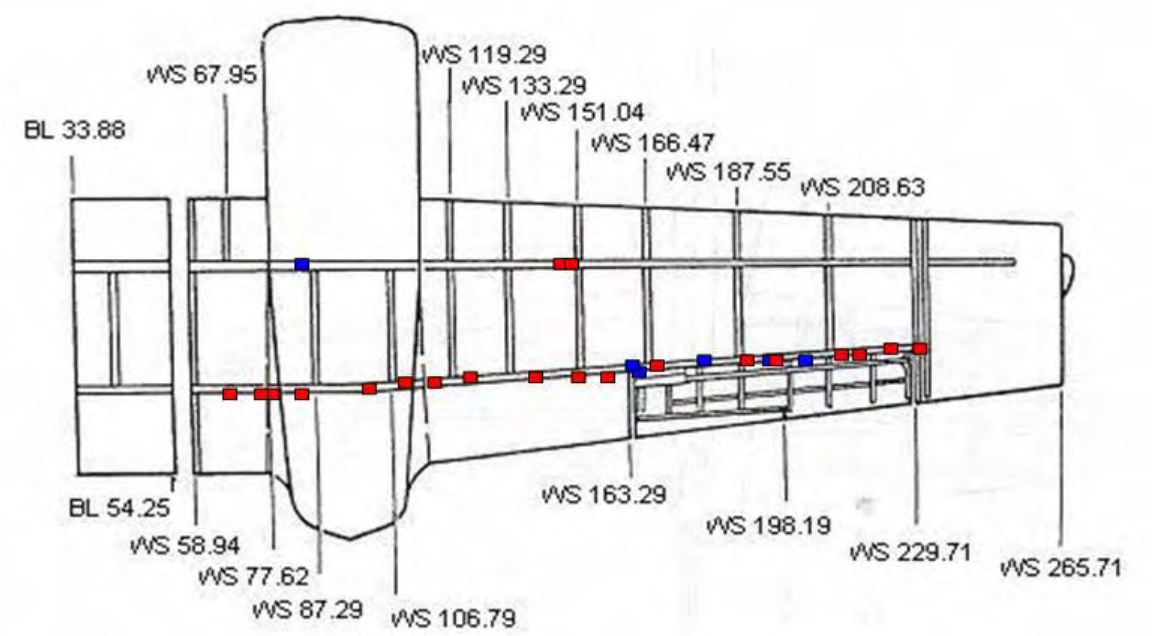

Figure 3-14. Location of Alternative NDI Indications on the Left Wing Lower Surface

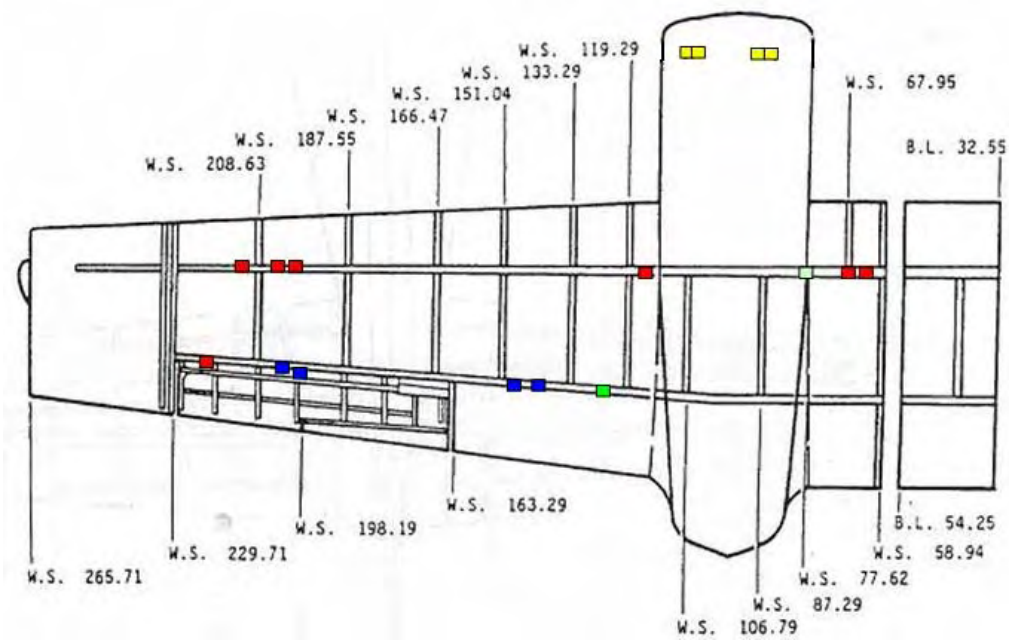

Figure 3-15. Location of Alternative NDI Indications on the Left Wing Upper Surface

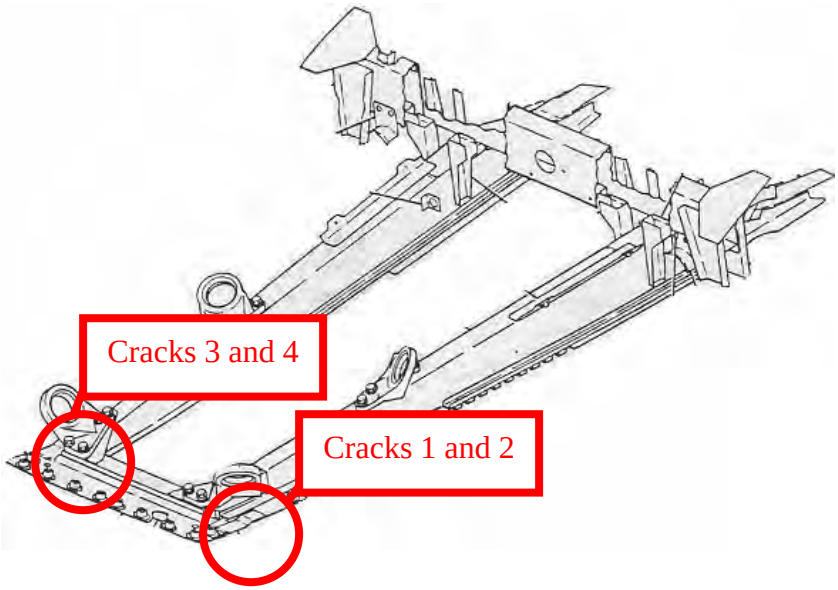

Figure 3-16. Location of Cracks in the Left Wing Engine Beam

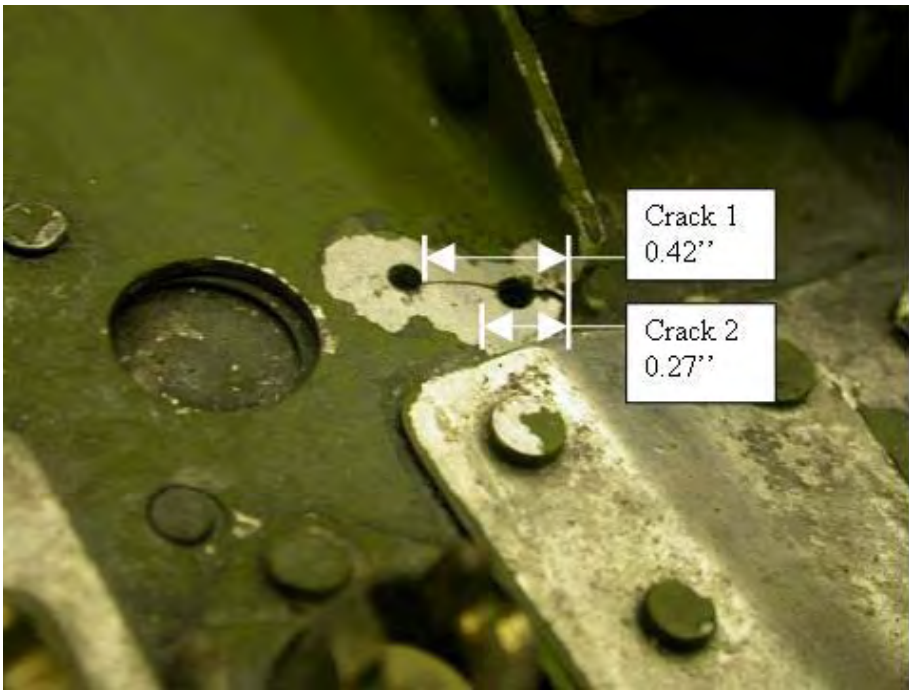

Figure 3-17. Left Wing Engine Beam Cracks 1 and 2

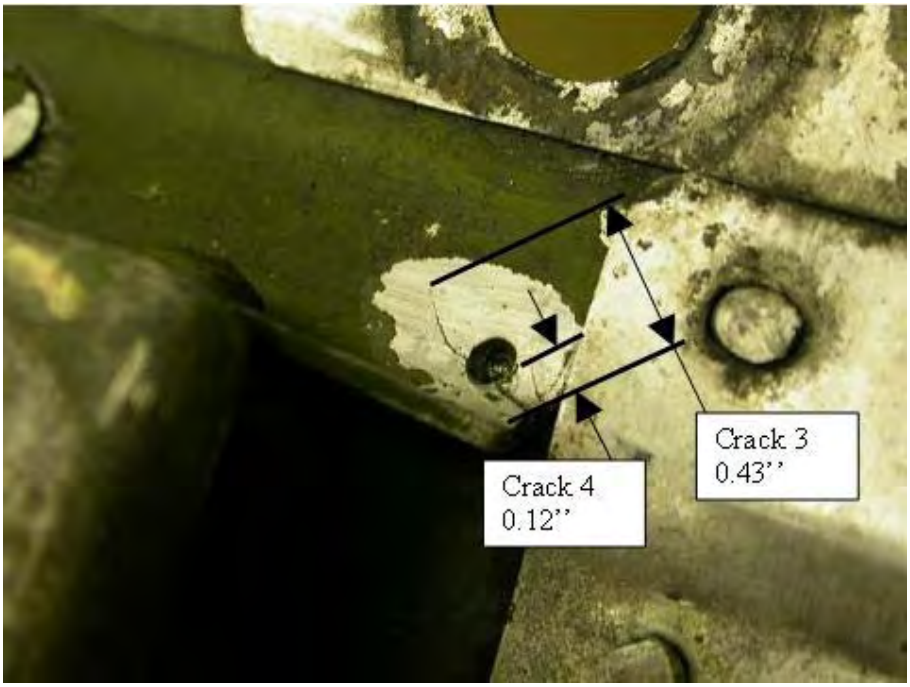

Figure 3-18. Left Wing Engine Beam Cracks 3 and 4

3.3.2 Right Wing Results.

As with the left wing, the upper and lower surfaces of the front and rear spars of the right wing were inspected by MOI, sliding probe, and spot probe, while the engine beams were inspected with the pencil probe. All noted indications were examined microscopically. Table 3-4 shows all indications found on the right wing. Figures 3-19 and 3-20 show the locations of the NDI indications on the upper and lower surfaces of the right wing, respectively. Isolated cracks and areas of corrosion were indicated along the front and rear spar of the right wing. An overview of cracks in the right wing engine structure is shown in figure 3-21. Crack 5, measuring 0.49 inch, and crack 6, measuring 0.12 inch, are shown in figure 3-22 on P/N 5654109-5. Figure 3-23 shows a 0.28-inch crack on P/N 5654109-5, while a 0.88-inch crack is shown on P/N 5650204-14 in figure 3-24.

Table 3-4. Alternative NDI Indications on the Right Wing

NDI Method	Indication	Location
Surface and bolthole eddy current	0.49-inch crack	Right engine beam
Surface and bolthole eddy current	0.12-inch crack	Right engine beam
Surface and bolthole eddy current	0.28-inch crack	Right engine beam
Surface and bolthole eddy current	0.88-inch crack	Right engine beam
Spot probe	Corrosion 30%	RW lower rear WS 71
Sliding probe	Crack indication	RW lower rear WS 85.5
Sliding probe	Crack indication	RW lower rear WS 101.5
Spot probe	Corrosion 15%	RW lower rear WS 151
Spot probe	Corrosion 30%	RW lower rear WS 168
MOI	Corrosion 30%	RW lower rear WS 174
MOI	Corrosion 30%	RW lower rear WS 176
MOI	Corrosion 20%	RW lower rear WS 200
MOI	Corrosion 25%	RW lower rear WS 206
Spot probe	Corrosion 30%	RW lower rear WS 230
Sliding probe	Crack indication	RW upper rear WS 155
Sliding probe	Crack indication	RW upper rear WS 195.5
Spot probe	Corrosion 15%	RW lower front WS 67
MOI	Crack indication	RW lower front WS 141
MOI	Crack indication	RW lower front WS 161
MOI	Corrosion 20%	RW lower front WS 164
MOI	Corrosion 30%	RW lower front WS 196-199
MOI	Crack indication	RW lower front WS 201
Spot probe	Corrosion 25%	RW lower front WS 209
Spot probe	Corrosion >30%	RW lower front WS 229
Spot probe	Corrosion 15%	RW upper front WS 61
Spot probe	Corrosion 20%	RW upper front WS 61.5
Spot probe	Corrosion 15%	RW upper front WS 70

Table 3-4. Alternative NDI Indications on the Right Wing (Continued)

NDI Method	Indication	Location
Spot probe	Corrosion 20%	RW upper front WS 127
Spot probe	Corrosion 20%	RW upper front WS 134.5
Spot probe	Corrosion 20%	RW upper front WS 176
Spot probe	Corrosion 30%	RW upper front WS 201
Spot probe	Corrosion 20%	RW upper front WS 213
Spot probe	Corrosion 30%	RW upper front WS 229
Sliding probe	Crack indication	RW upper skin WS 204
Sliding probe	Crack indication	RW upper skin WS 209

RW = Right wing

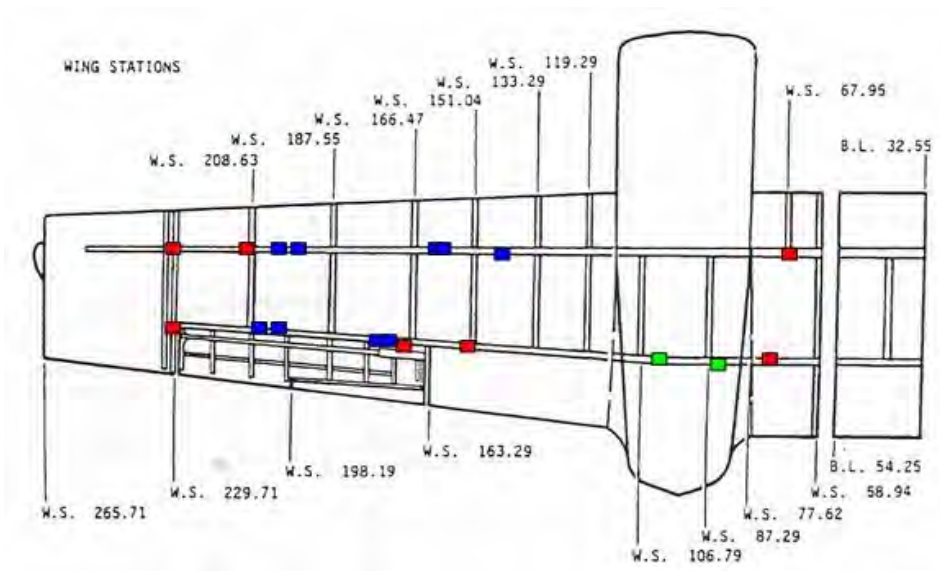

Figure 3-19. Location of Alternative NDI Indications on the Right Wing Lower Surface

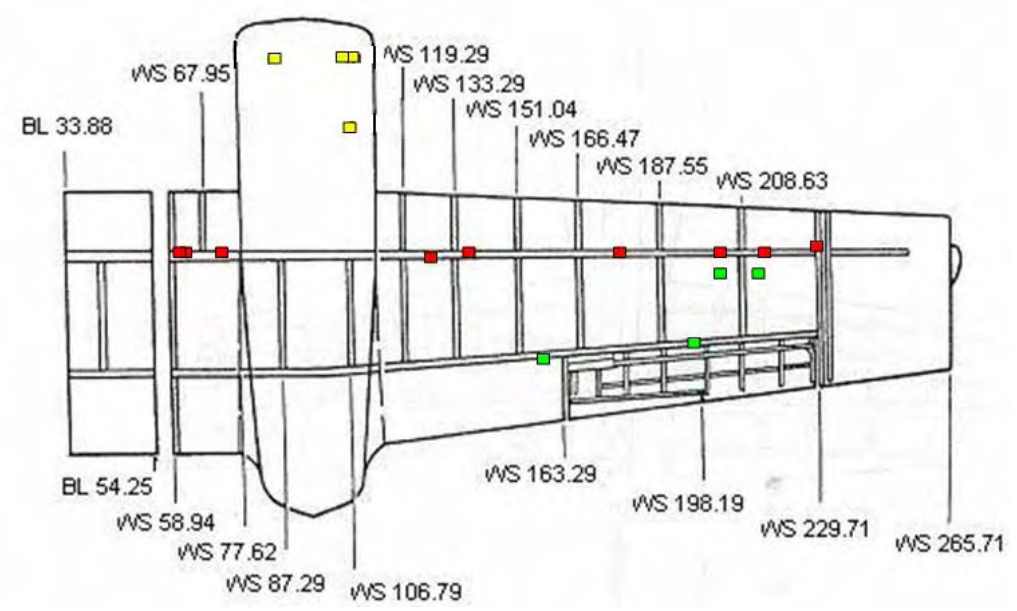

Figure 3-20. Location of Alternative NDI Indications on the Right Wing Upper Surface

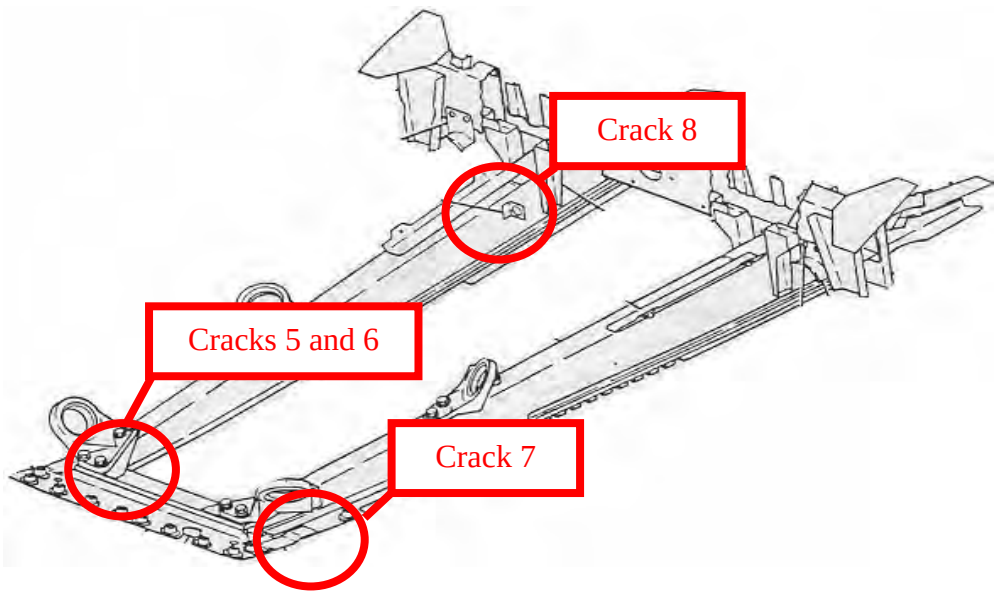

Figure 3-21. Location of Cracks on the Right Wing Engine Beam

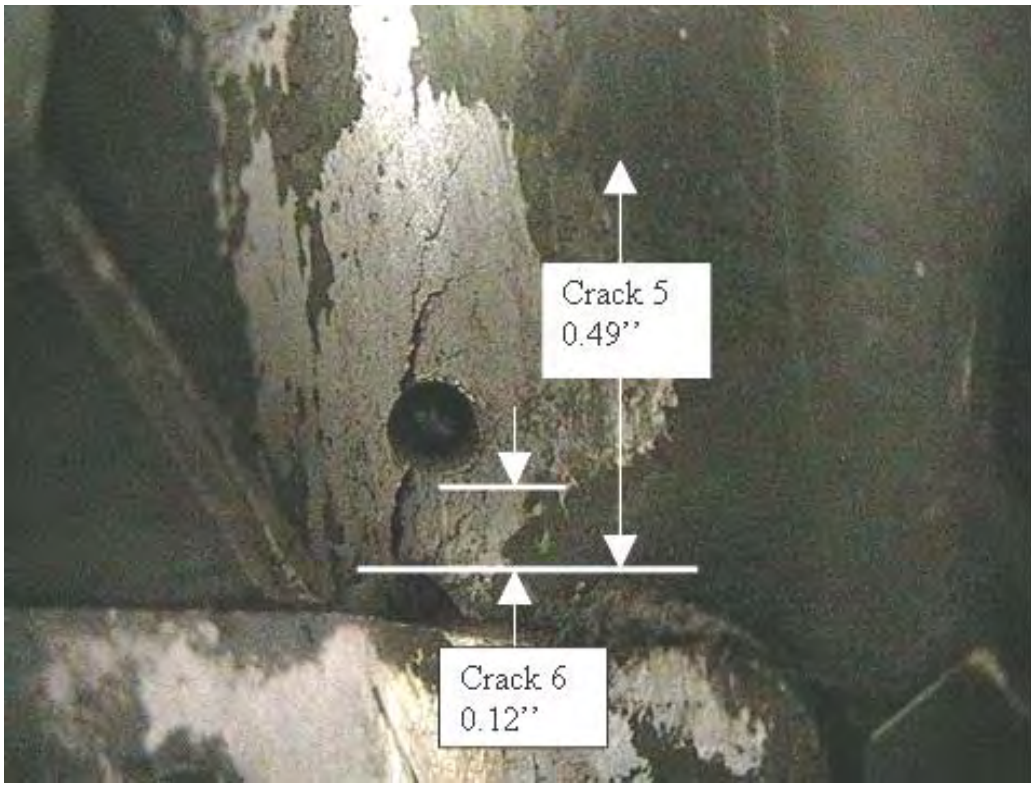

Figure 3-22. Right Wing Engine Beam Cracks 5 and 6

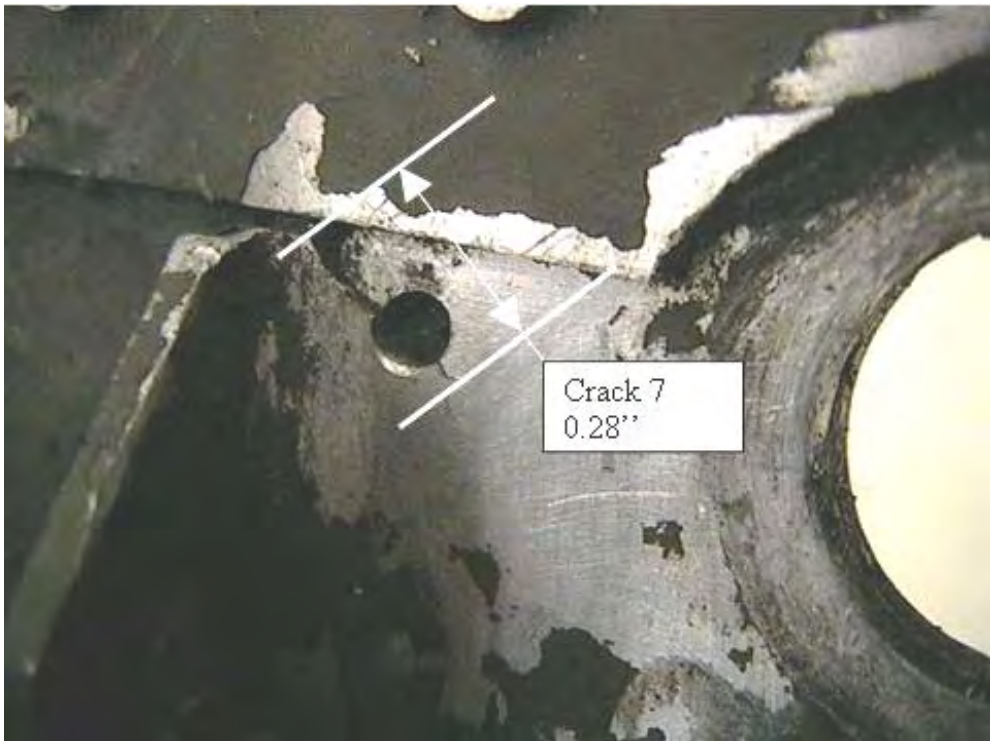

Figure 3-23. Right Wing Engine Beam Crack 7

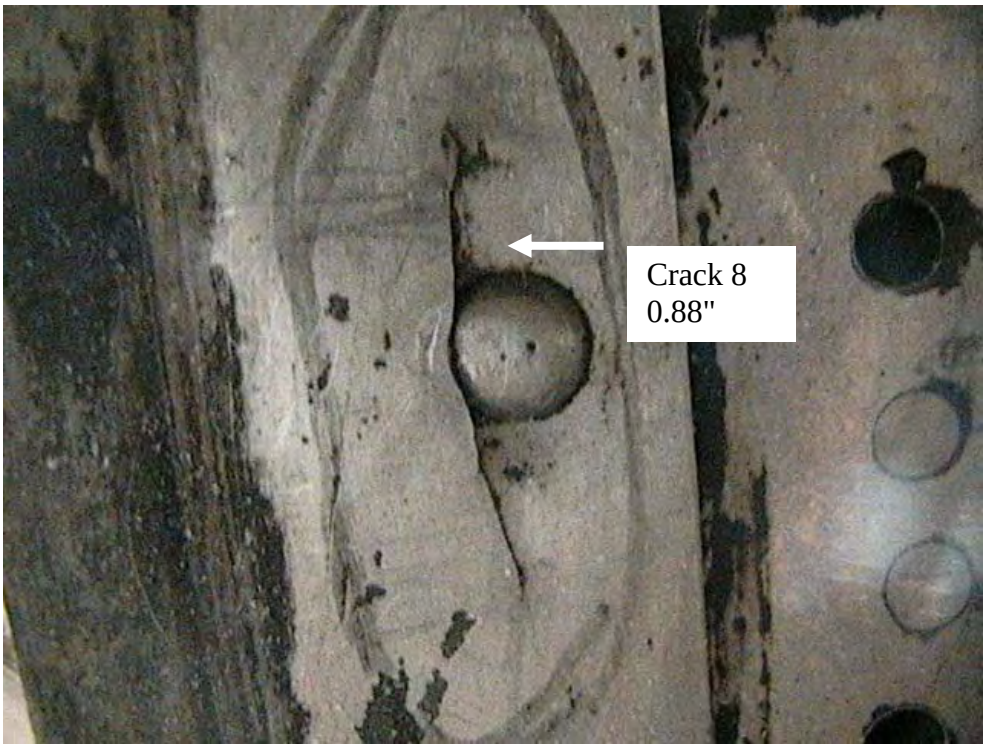

Figure 3-24. Right Wing Engine Beam Crack 8

3.3.3 Fuselage Channel Results.

The left and right fuselage channels were inspected for cracks and corrosion using the MOI, sliding probe, and spot probe. All indications were noted and further investigated for validity during the microscopic examination phase of this project. Table 3-5 shows the indications reported during these inspections and includes information on the inspection method, type of indication, and the airplane location where indications were found. Figure 3-25 shows scattered indications of cracks and areas of corrosion on the left fuselage channel. The same scattering was observed on the right fuselage channel, as shown in figure 3-26.

Table 3-5. Alternative NDI Indications on the Fuselage Channels

Method	Indications	Location
Spot probe	30% Corrosion	LH FS 155.5
Spot probe	10% Corrosion	LH FS 163
Sliding probe	Crack	LH FS 163
MOI	30% Corrosion	LH FS 163
Spot probe	10% Corrosion	LH FS 179.5
Spot probe	10% Corrosion	LH FS 185.5
Spot probe	30% Corrosion	LH FS 188
MOI	10% Corrosion	LH FS188
Spot probe	30% Corrosion	LH FS 189.5
Spot probe	10% Corrosion	LH FS 210
Sliding probe	Crack	LH FS 210
Spot probe	10% Corrosion	RH FS 162
Spot probe	10% Corrosion	RH FS 167.5
MOI	10% Corrosion	RH FS 167.5
Sliding probe	Crack	RH FS 168.5
MOI	10% Corrosion	RH FS 170.5
MOI	10% Corrosion	RH FS 181
Spot probe	30% Corrosion	RH FS 189
MOI	10% Corrosion	RH FS 195
Spot probe	10% Corrosion	RH FS 210
Spot probe	30% Corrosion	RH FS 212
MOI	20% Corrosion	RH FS 212

FS = Frame station
RH = Right hand
LH = Left hand

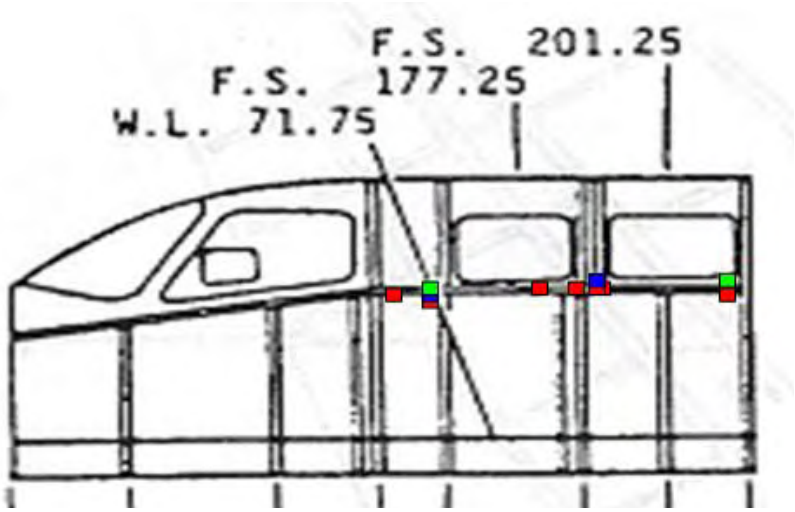

Figure 3-25. Location of Alternative NDI Indications on the Left Fuselage Channel

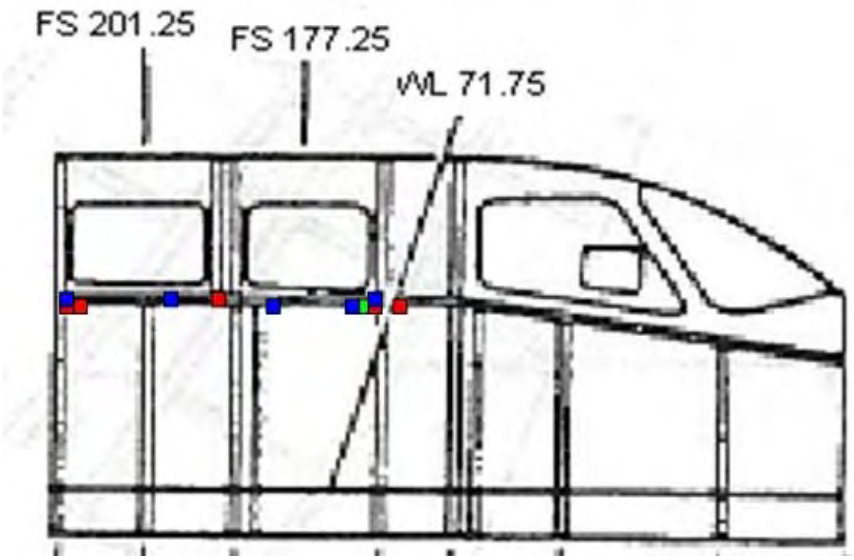

Figure 3-26. Location of Alternative NDI Indications on the Right Fuselage Channel

3.3.4 Horizontal Stabilizer Results.

The upper and lower surfaces of the front and rear spars of the horizontal stabilizer were inspected for cracks and corrosion using the MOI, sliding probe, and spot probe. All indications were noted and further investigated for validity during the microscopic examination phase of this project. Table 3-6 shows the indications reported during these inspections and includes information on the inspection method, type of indication, and the airplane location where indications were found. Figures 3-27 and 3-28 illustrate the locations of indications on the upper and lower surfaces of the horizontal stabilizer, respectively. Indications of cracks and corrosion were isolated on the front and rear spars of the horizontal stabilizer.

Table 3-6. Alternative NDI Indications on the Horizontal Stabilizer

Method	Indication	Location
Spot probe	20% Corrosion	LH lower rear BL 8.5
Spot probe	20% Corrosion	LH lower rear BL 49
Spot probe	10% Corrosion	LH upper rear BL 8
Spot probe	15% Corrosion	LH upper rear BL 16-17.5
Sliding probe	Crack	LH lower front BL 21
Spot probe	10% Corrosion	LH lower front BL 24.5
MOI	Crack	LH lower skin BL 66.5
MOI	Crack	LH upper skin BL 17
Spot probe	15% Corrosion	RH lower rear BL 8.5
Spot probe	20% Corrosion	RH lower rear BL 13
Spot probe	20% Corrosion	RH lower rear BL 32
Spot probe	15% Corrosion	RH lower rear BL 35
Spot probe	30% Corrosion	RH lower rear BL 47
Sliding probe	Crack	RH upper rear BL 23.5
Sliding probe	Crack	RH upper rear BL 24
Spot probe	15% Corrosion	RH lower front BL 13
Spot probe	15% Corrosion	RH lower front BL 16.5
Sliding probe	Crack	RH lower skin BL 30
Sliding probe	Crack	RH lower skin BL 67.5
Spot probe	30% Corrosion	RH lower skin BL 96
Sliding probe	Crack	RH upper skin BL 7.5
Sliding probe	Crack	RH upper skin BL 8

BL = Body Line
RH = Right hand
LH = Left hand

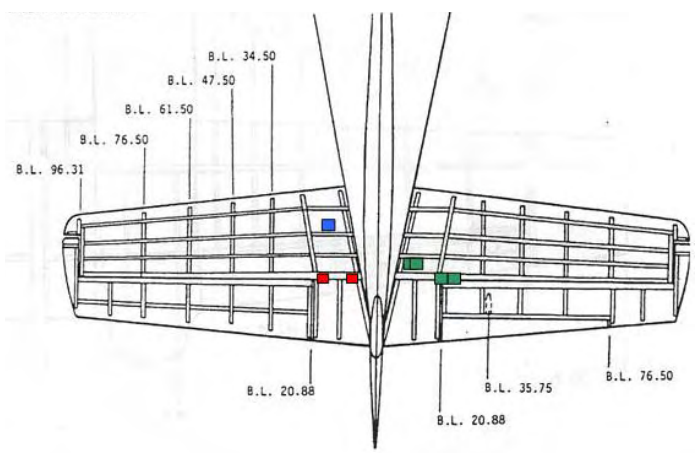

Figure 3-27. Location of Alternative NDI Indications on the Horizontal Stabilizer Upper Surface

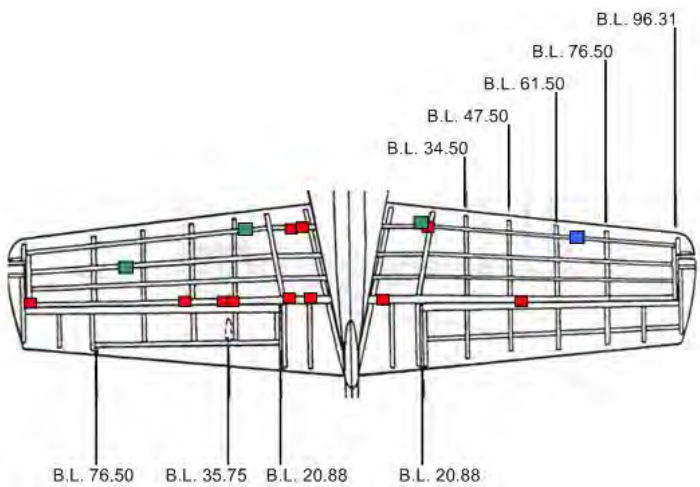

Figure 3-28. Location of Alternative NDI Indications on the Horizontal Stabilizer Lower Surface

3.3.5 Vertical Stabilizer Results.

The left and right surfaces of the front and rear spars of the vertical stabilizer were inspected for cracks and corrosion using the MOI, sliding probe, and spot probe. All indications were noted and further explored in the microscopic examination portion of this project. Table 3-7 shows the indications reported during these inspections and includes information on the inspection method, type of indication, and the airplane location where indications were found. Figures 3-29 and 3-30 illustrate the locations of indications on the left and right surfaces of the vertical stabilizer, respectively. On the left side of the stabilizer, corrosion indications were more prominent on the rear spar, while the right side of the vertical stabilizer showed more corrosion indications on the front spar.

Table 3-7. Alternative NDI Indications on the Vertical Stabilizer

Method	Indications	Location
Spot probe	10% corrosion	LH rear WL 152
Spot probe	20% corrosion	LH rear WL 156
Spot probe	15% corrosion	LH rear WL 164
Spot probe	15% corrosion	LH rear WL 175
Spot probe	20% corrosion	LH rear WL 186
Spot probe	10% corrosion	LH front WL 151
Spot probe	15% corrosion	RH rear WL 145
Spot probe	10% corrosion	RH rear WL 152
MOI	Crack	RH rear WL 169
Spot probe	10% corrosion	RH front WL 120
Spot probe	10% corrosion	RH front WL 142
Sliding probe	Crack	RH front WL 149

Table 3-7. Alternative NDI Indications on the Vertical Stabilizer (Continued)

Method	Indications	Location
Spot probe	20% corrosion	RH front WL 148
Spot probe	10% corrosion	RH front WL 159
Spot probe	10% corrosion	RH front WL 162
Spot probe	15% corrosion	RH front WL 183

RH = Right hand
LH = Left hand
WL = Water line

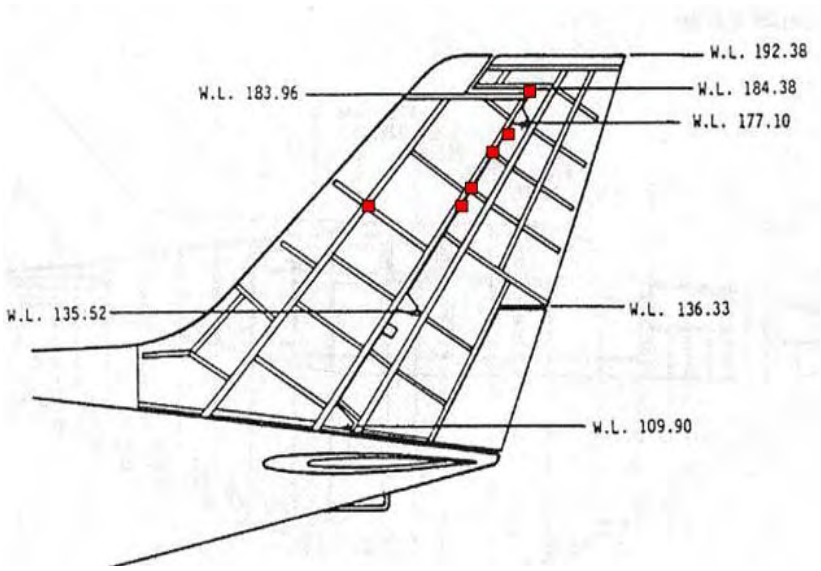

Figure 3-29. Location of Alternative NDI Indications on the Vertical Stabilizer Left Side

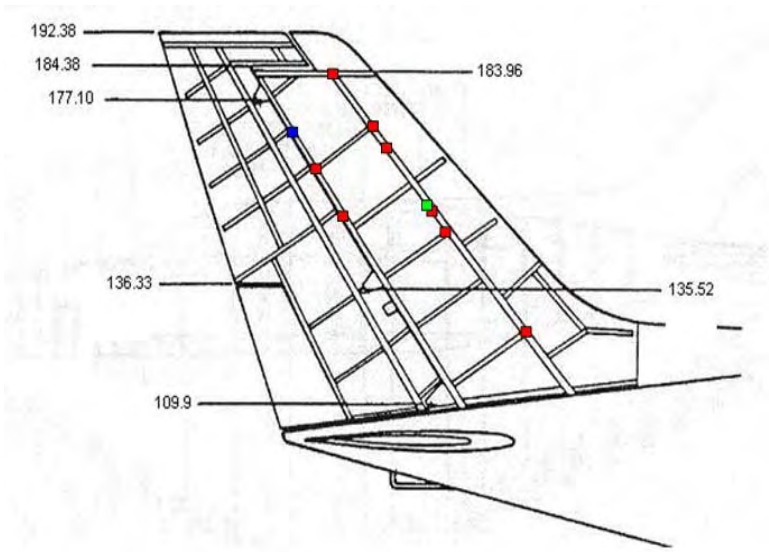

Figure 3-30. Location of Alternative NDI Indications on the Vertical Stabilizer Right Side

3.4 DETAILED DISASSEMBLY OF MAJOR AIRPLANE SECTIONS.

Following the completion of the alternative NDI, the major airplane sections were completely disassembled to access suspect areas and critical structural details. Suspect areas were defined as areas with any NDI indications or areas with noticeable damage found during the visual inspections or disassembly. Critical structural details were identified analytically and experimentally by Cessna in conjunction with the development of the supplemental inspection program. These suspect areas and critical structural details were the focus of the microscopic examination. Table 3-8 shows the correlation between critical structural details and supplemental inspection locations, identifying the critical areas that were inspected as part of the supplemental inspection program. It should be noted that the SID identified additional inspections for areas other than the critical structural details listed in table 3-8. Twelve critical structural details, shown in figures 3-31 and 3-32, were determined for the wings and engine beams. Six details were identified on the front spar, two on the auxiliary spars, one on the rear spar, one on each engine beam, and two on the stub wing forward and aft spar attachment fittings. Two critical details were identified for the fuselage. These details, shown in figure 3-33, were the fuselage left-hand longeron and the tailcone angle attachment to the horizontal stabilizer rear spar. Seven critical details were identified for the horizontal stabilizer, as shown in figure 3-34. Three of these critical details were located on the front spar, while three were located on the rear spar. The remaining detail was located on the aft auxiliary spar upper cap. Figure 3-35 shows the location of two critical details on the vertical stabilizer, which are the vertical stabilizer rear spar attachment and rear spar cap. The main landing gear side brace actuator collar and nose landing gear fork were also identified by Cessna as critical structural details. Damage indications from the supplemental inspections were found on the following critical structural details:

- SID #57-10-14: Right stub wing on angle common to inboard side of outboard rib and forward carry-through beam
- SID #57-10-16: Left wing front spar lower cap WS 67
- SID #57-10-16: Left wing front spar lower cap WS 87
- SID #57-10-16: Left wing front spar lower cap WS114.5
- SID #57-10-18: Left wing aft auxiliary spar lower cap WS 99
- SID #57-10-18: Left wing aft auxiliary spar lower cap WS 100
- SID #57-10-21: Left wing upper skin trailing edge
- SID #54-10-03: Right wing outboard engine beam WS 106.8 and frame station (FS) 134.7
- SID #55-10-06: Horizontal stabilizer left front spar web body line (BL) 7.5
- SID #55-10-08: Horizontal stabilizer right rear upper spar cap BL 1.0

- SID #55-10-04: Horizontal stabilizer right front upper skin BL 7.5 and BL 8.0
- SID #55-20-02: Horizontal stabilizer left rear lower spar cap BL 20.88

Table 3-8. Correlation Between Critical Details and SID Locations

ID	Critical Area Description	Critical Areas Location	SID Number/Title
CW-1	Wing carry-through front spar lower cap	BL 48.00	SID 57-10-14 Wing carry-through front spar lower cap
CW-2	Wing front spar lower cap at root fitting attach	W.S 66.70	SID 57-10-16 Wing front spar lower cap inspection/ modification
CW-3	Wing front spar lower cap at canted rib attachment	WS 80.52	SID 57-10-16 Wing front spar lower cap inspection/ modification
CW-4	Wing front spar lower cap at inboard engine beam attach	WS 88.05	SID 57-10-16 Wing front spar lower cap inspection/ modification
CW-5	Wing front spar lower cap at outboard engine beam attach	WS 107.02	SID 57-10-16 Wing front spar lower cap inspection/ modification
CW-6	Wing front spar lower cap at skin splice	WS 119.74	SID 57-10-16 Wing front spar lower cap inspection/ modification
CW-7	Wing forward auxiliary spar lower cap	WS 81.20	SID 57-10-17 Wing forward auxiliary spar lower cap
CW-8	Wing aft auxiliary spar lower cap	WS 96.64	SID 57-10-18 Wing aft auxiliary spar lower cap
CW-9	Wing rear spar lower cap at splice	WS 110.24	SID 57-10-19 Wing rear spar lower cap at spar splice
CW-10	Wing carry-through aft spar lower cap	BL 49.50	SID 57-10-20 Wing carry-through rear spar lower cap
CW-11	Wing front spar upper cap	WS 108.08	SID 57-10-21 Bonded wing inspection and sealing
CEB-1	Engine beam at aft engine mount	FS 127.15	SID 54-10-03 Engine Beams

Table 3-8. Correlation Between Critical Details and SID Locations (Continued)

ID	Critical Area Description	Critical Areas Location	SID Number/Title
CF-1	Fuselage left-hand longeron	FS 190.33	SID 53-10-02 Fuselage left- and right-hand channel assemblies
CF-2	Tailcone angle attachment to horizontal rear spar	BL 2.90	SID 55-10-03 Horizontal stabilizer spars and attachments
CH-1	Horizontal stabilizer front spar upper cap	BL 0.0	SID 55-10-04 Horizontal stabilizer front spar upper cap
CH-2	Horizontal stabilizer front spar lower cap	BL 0.0	SID 55-10-05 Horizontal stabilizer front spar lower cap
CH-3	Horizontal stabilizer front spar attach bolt through web	BL 7.69	SID 55-10-06 Horizontal stabilizer front spar attach
CH-4	Horizontal stabilizer rear spar lower cap at attach bolt	BL 2.90	SID 55-10-07 Horizontal stabilizer rear spar lower cap attach
CH-5	Horizontal stabilizer rear spar upper cap	BL 0.0	SID 55-10-08 Horizontal stabilizer rear spar upper cap
CH-6	Horizontal stabilizer rear spar lower cap	BL 0.0	SID 55-10-09 Horizontal stabilizer rear spar lower cap
CH-7	Horizontal stabilizer rear auxiliary spar upper cap	BL 8.01	SID 55-10-03 Horizontal stabilizer spars and attachments
CV-1	Vertical stabilizer rear spar at attachment	WL 108.38	SID 55-30-01 Vertical stabilizer spars and attachments
CV-2	Vertical stabilizer rear spar cap	WL 136.04	SID 55-30-01 Vertical stabilizer spars and attachments
CMLG-1	Main landing gear side brace actuator collar		SID 32-10-04 Main gear actuator collar
CNLG-1	Nose landing gear fork		SID 32-20-02 Nose gear fork

WL = Water line

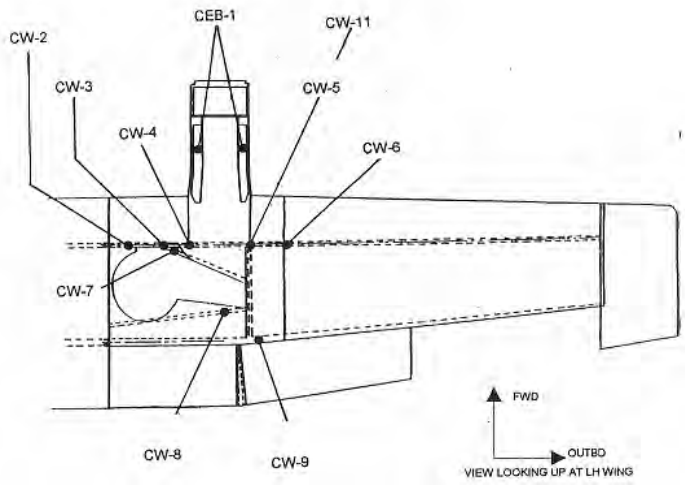

Figure 3-31. Critical Structural Details on the Wings

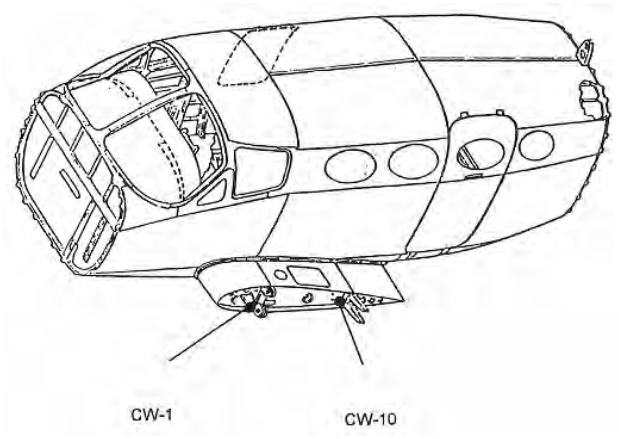

Figure 3-32. Critical Structural Details on the Stub Wings

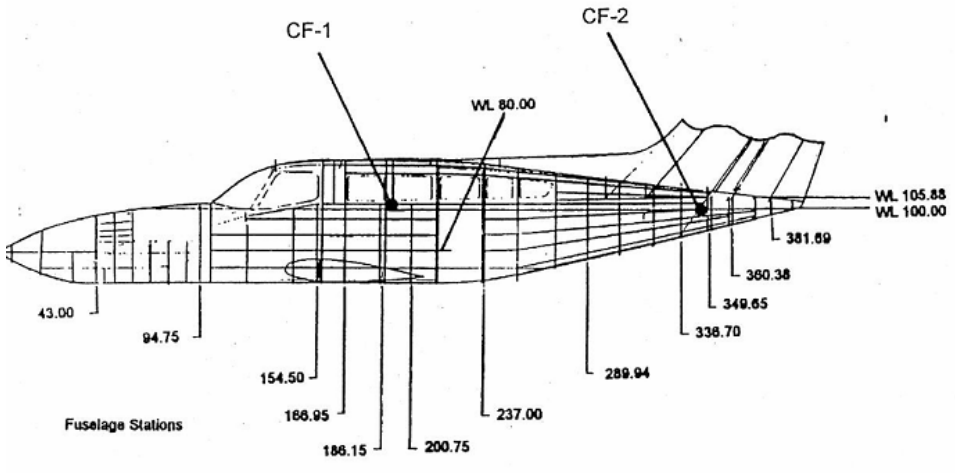

Figure 3-33. Critical Structural Details on the Fuselage

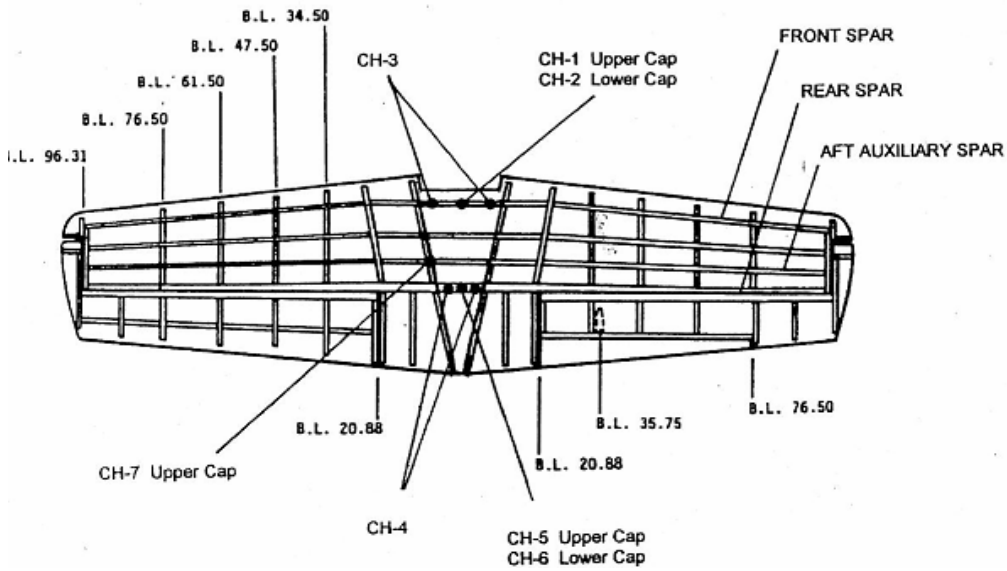

Figure 3-34. Critical Structural Details on the Horizontal Stabilizer

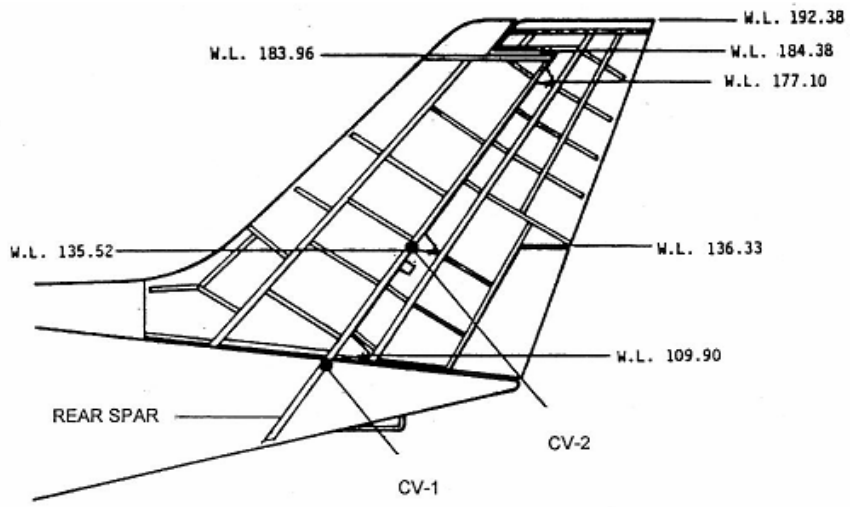

Figure 3-35. Critical Structural Details on the Vertical Stabilizer

During the detailed disassembly, cracks were found on the engine structure and carry-through structure. Table 3-9 lists structural details found cracked in the engine structure as well as the crack orientation to the wing front spar. As illustrated in figure 3-36, cracks were located on the inboard and outboard engine beams where they attach to the lower front wing spar. Specifically, cracks were located on the inboard engine beam of the right wing, on an angle assembly on the right outboard engine beam, and on the channels of the left and right outboard engine beams along with the channel of the right inboard engine beam.

Table 3-9. Crack Locations and Orientations on Engine Beams

Figure-Item	Part Number	Nomenclature	Crack Orientation With Front Spar
01-9,-9A	5654109-3/-7	Beam-nacelle inboard RH	Parallel
01-22	5650118-2	Angle assembly-outboard RH	Parallel
01-33	5654111-1	Channel-outboard LH	Perpendicular
01-34	5654111-2	Channel-outboard RH	Perpendicular
01-36	5654110-2	Channel-inboard RH	Parallel

RH = Right hand

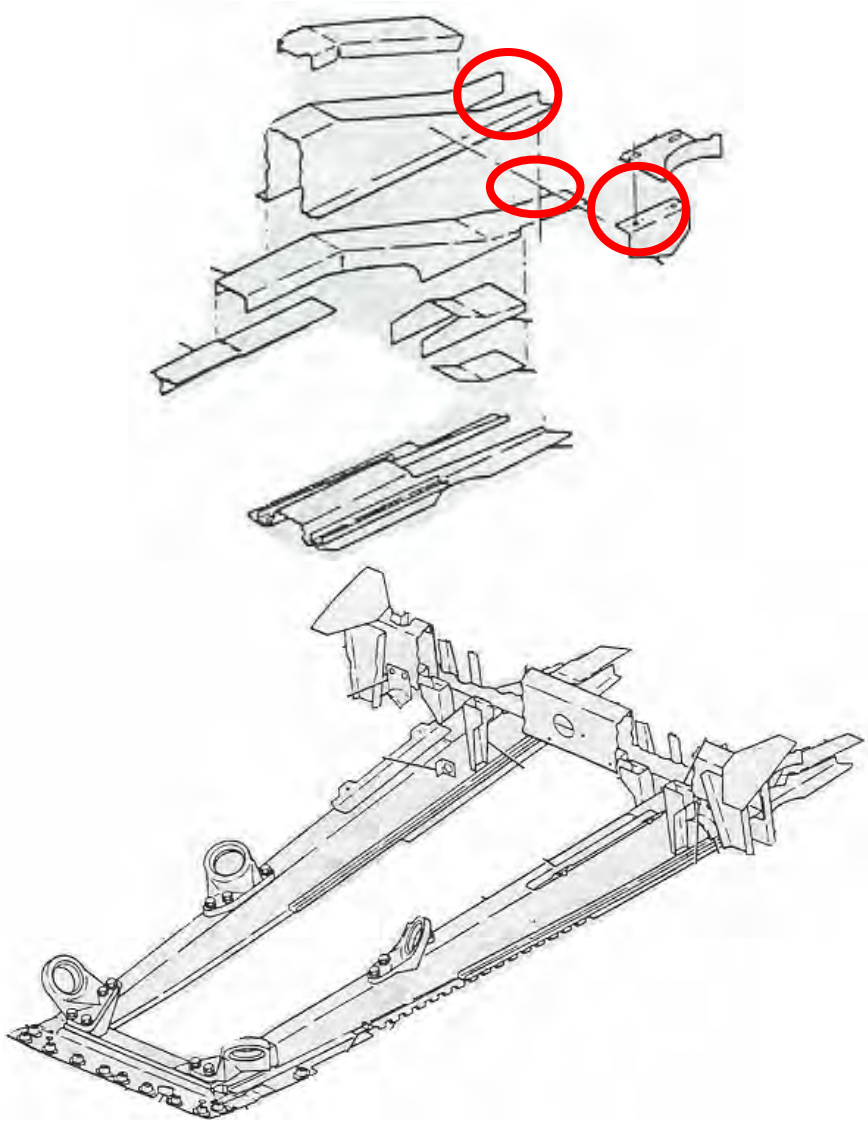

Figure 3-36. Illustrated Parts Breakout of the Engine Beam Structure

Figure 3-37 shows the right wing engine structure. The listed figure numbers refer to detailed pictures of the cracks found in the right wing engine beam structure. Figure 3-38 shows a crack found on the channel of the inboard engine beam. This crack runs almost parallel to the front spar on the top surface of the channel. Figure 3-39 shows a continuation of the crack shown in figure 3-38 across the outboard flange of the inboard engine beam. Figure 3-40 shows a crack found on the channel of the outboard engine beam that runs along the inboard top side perpendicular to the front spar. Figure 3-41 shows a crack on the angle bracket on the outboard right nacelle beam. This crack runs mostly perpendicular to the front spar. Additional damage was found between the right inboard engine beam and its attachment location on the right lower front spar. The skin was worn completely through, and the spar cap itself showed signs of wear, as shown in figure 3-42.

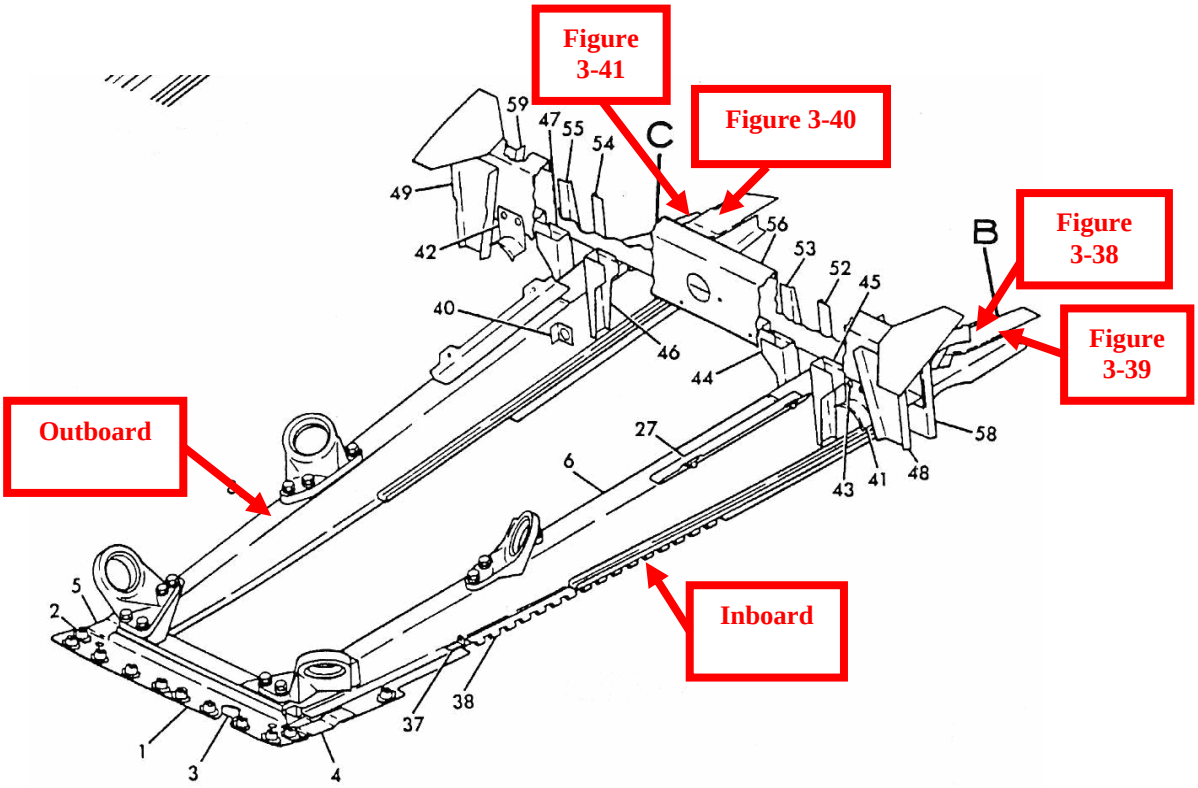

Figure 3-37. Location of Cracks on the Right Wing Engine Beams

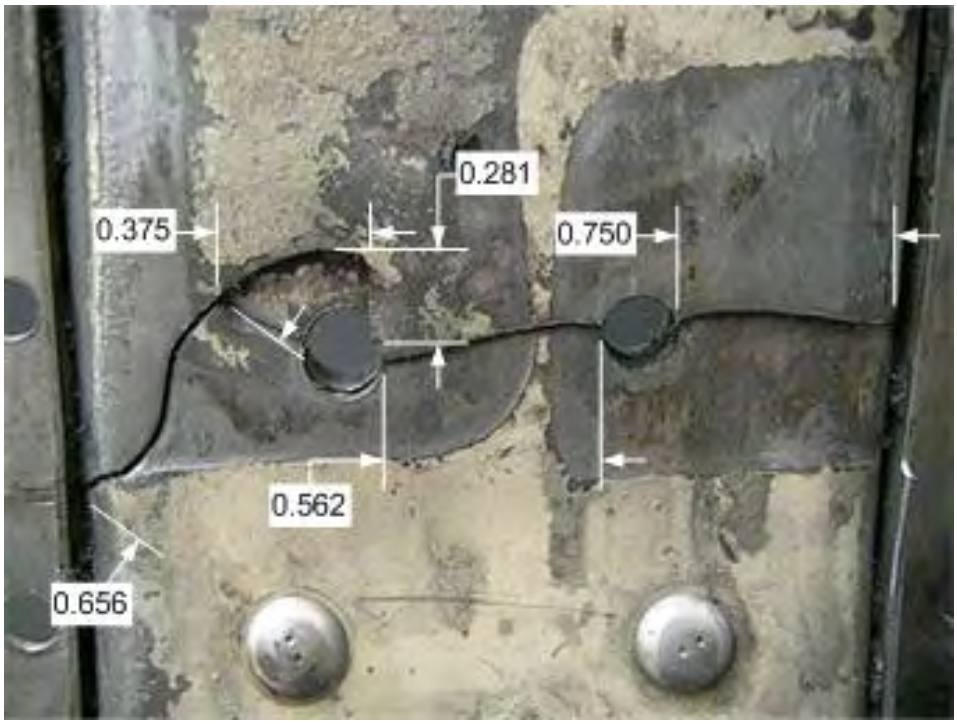

Figure 3-38. Cracked Right Wing Inboard Engine Beam

Figure 3-39. Cracked Outboard Flange of the Right Wing Inboard Engine Beam

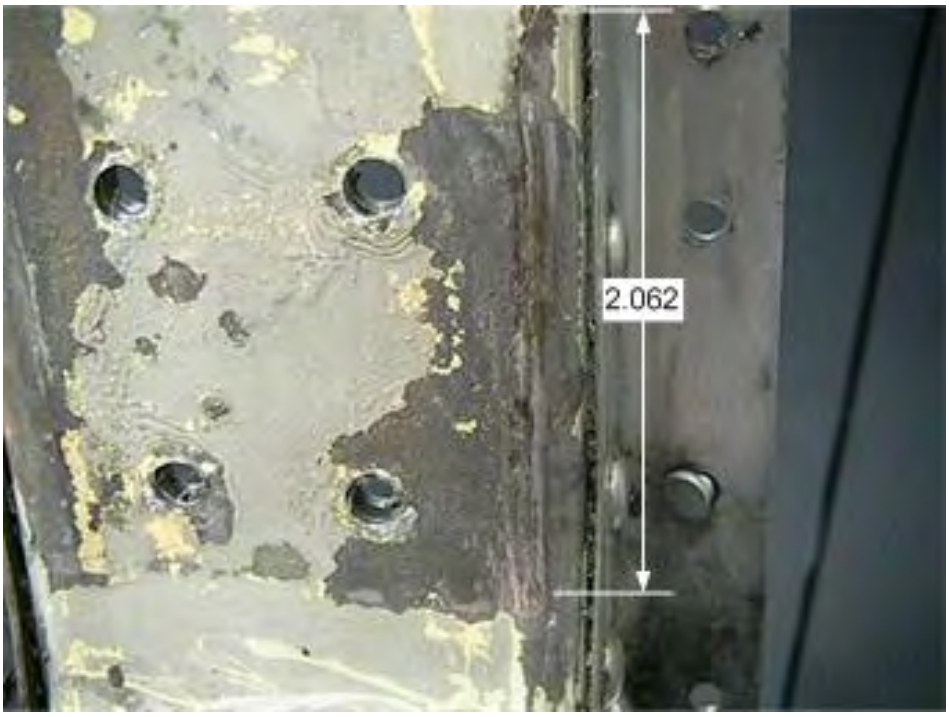

Figure 3-40. Cracked Inboard Top Surface of the Right Wing Outboard Engine Beam

Figure 3-41. Cracked Angle Bracket of the Right Wing Outboard Engine Beam

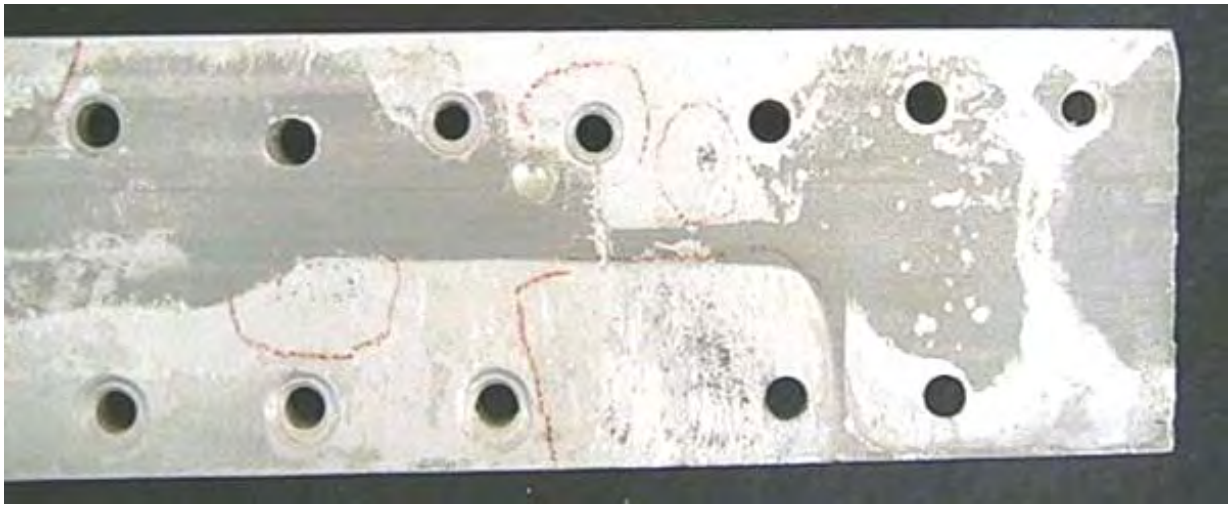

Figure 3-42. Wear on the Right Wing Front Spar Lower Cap

During removal of the engine beams on the left wing, a crack was observed in the channel of the outboard beam running perpendicular to the front spar on the inboard side top surface of the channel. Figure 3-43 shows an overview of the left engine beam, while figure 3-44 shows the 1.437-inch crack on the channel of the outboard engine beam.

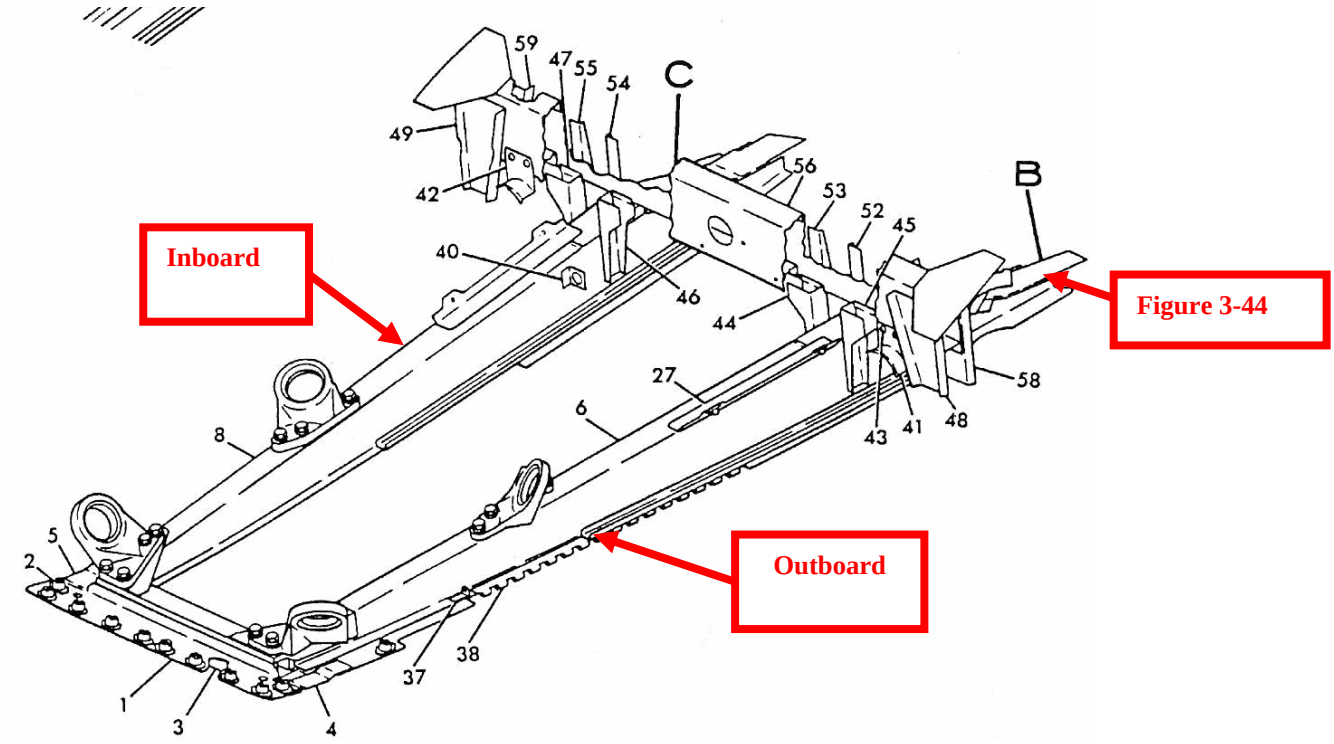

Figure 3-43. Location of Crack on the Left Wing Outboard Engine Beam

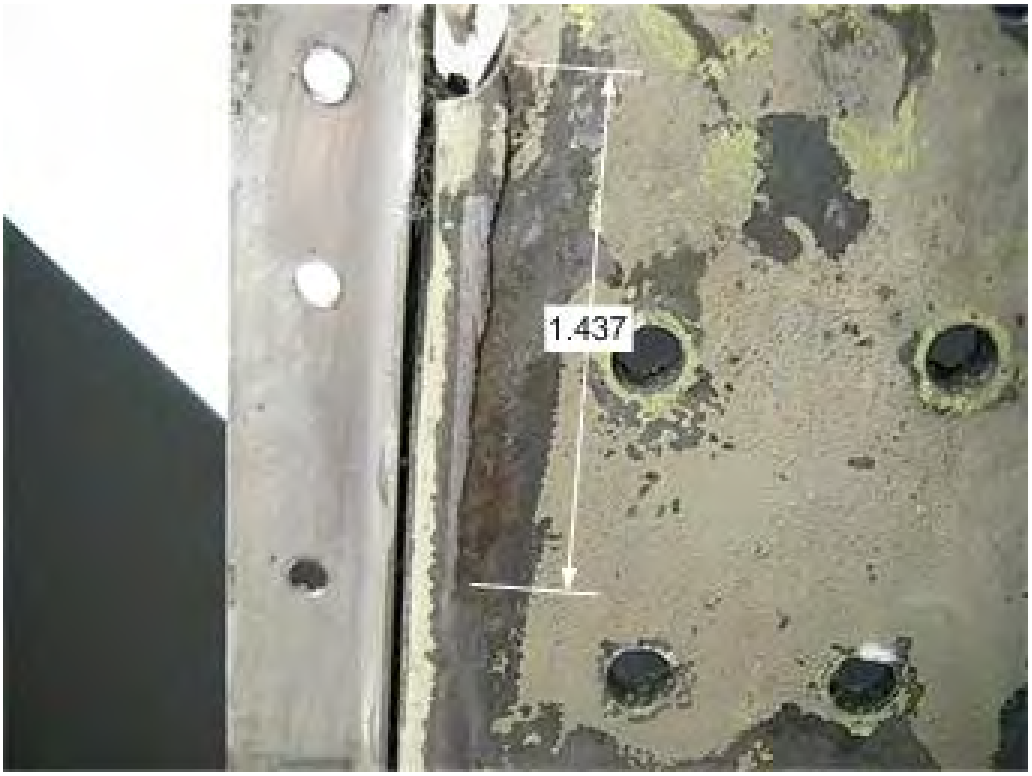

Figure 3-44. Crack on the Channel of the Left Outboard Engine Beam

Cracks were also discovered on the fuselage wing carry-through structure during removal. Table 3-10 documents the location and number of cracks found in the carry-through structure. Forty-one total cracks were discovered, ranging in length from 0.13 to 2.98 inches. Figure 3-45 shows the carry-through structure. Figure 3-46 shows a crack found in the aft carry-through forward web (P/N 5211173-4). This particular crack was found on the left-hand side at BL 1. The forward carry-through forward web (P/N 5211172-5) was found to have 17 cracks. Four of these cracks are shown in figure 3-47. Figure 3-48 shows four of the cracks found in the forward carry-through aft web. The mode of failure for these cracks was investigated in the microscopic examination.

Table 3-10. Damage Found in the Wing Carry-Through Structure

Part Numbers	Nomenclature	Damage Found
5211173-(4-8)	Aft carry-through forward web	9 Cracks
5211173-(2-3)	Aft carry-through aft web	6 Cracks
5211172-(5-8)	Forward carry-through forward web	17 Cracks
5211172-(2-4)	Forward carry-through aft web	9 Cracks

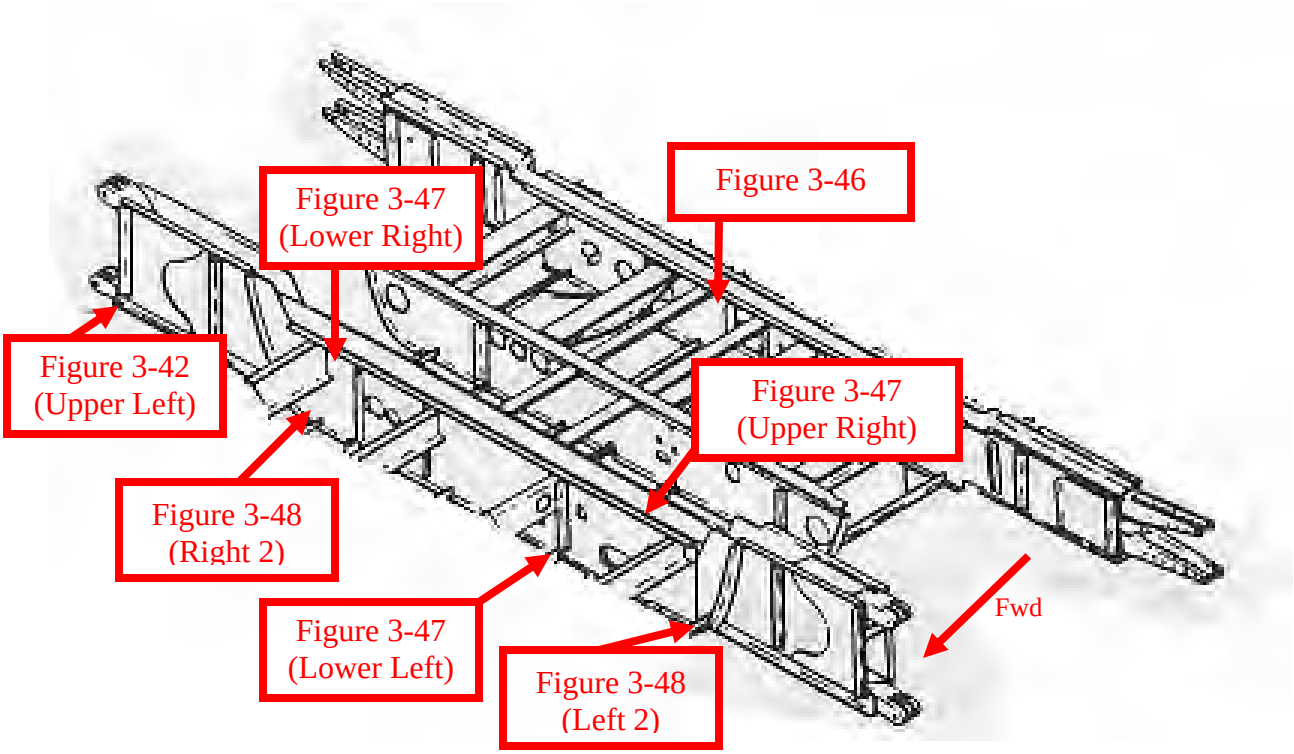

Figure 3-45. Wing Carry-Through Structure

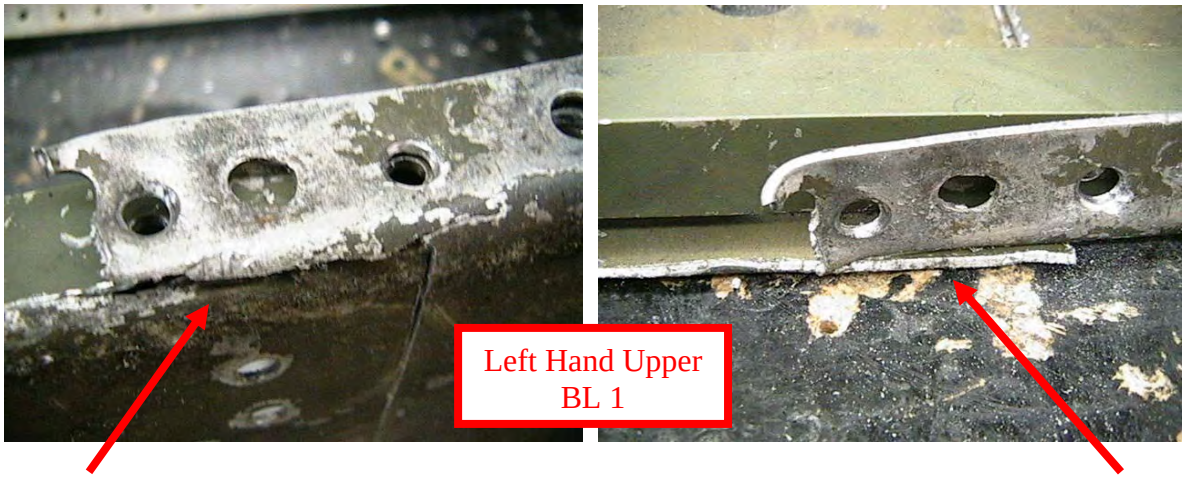

Figure 3-46. Crack in the Aft Carry-Through Forward Web

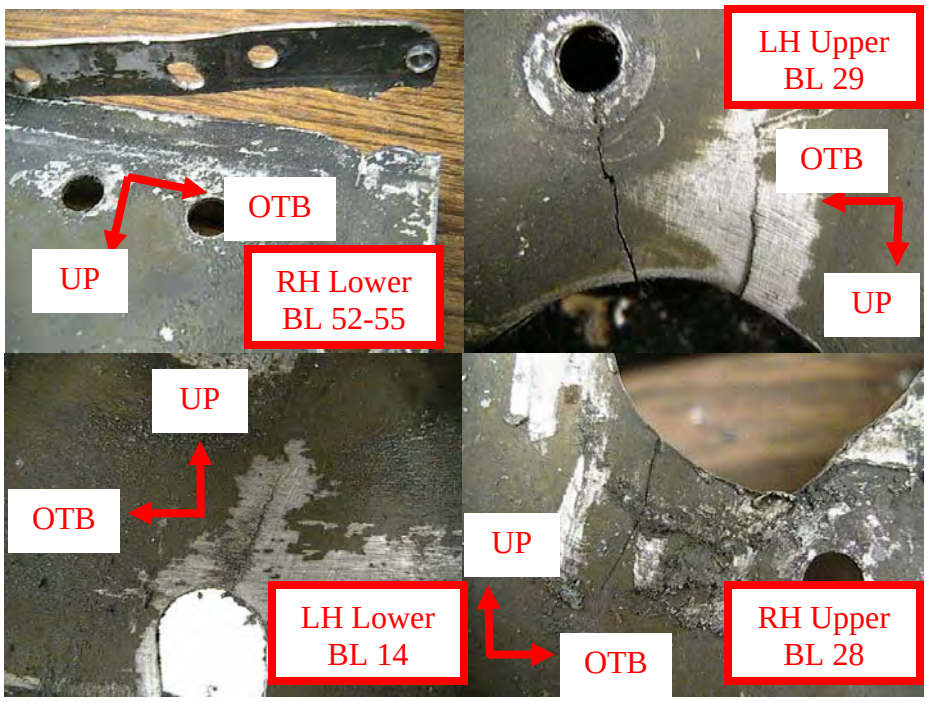

Figure 3-47. Cracks in the Forward Carry-Through Forward Web

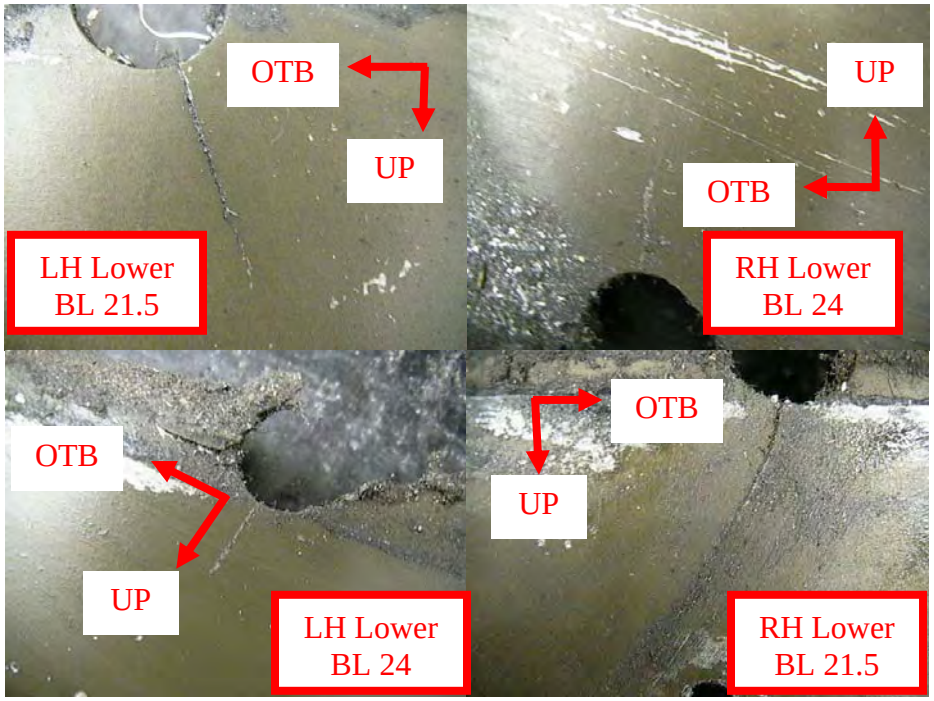

Figure 3-48. Cracks in the Forward Carry-Through Aft Web

Following the detailed disassembly, all critical structural parts and parts from suspect areas were paint stripped using plastic media blasting and etched with a sodium hydroxide base to enhance damage detection during the microscopic examination.

3.5 MICROSCOPIC EXAMINATION.

Suspect areas from the visual inspections, supplemental inspections, alternative NDI, defects found during disassembly, and critical structural details were examined microscopically to locate cracks and areas of corrosion. A low-power magnifying glass (10 times) and a 7-45 power optical microscope, as shown in figures 3-49 and 3-50, respectively, were used for the examination. All fastener holes were inspected for cracks greater than 0.01 inch, and general part geometry and defect location were noted. Corrosion area and severity were documented by two methods. The maximum pit depth was noted, while the maximum percentage of thickness loss due to corrosion was used to compare the NDI results and to classify the corrosion as follows:

- Light—0%-2% Material Loss
- Light-Moderate—2%-5% Material Loss
- Moderate—5%-7% Material Loss
- Moderate-Severe—7%-10% Material Loss
- Severe—>10% Material Loss

Corrosion effects were classified by percentage of thickness lost since it seemed most representative of the actual damage done by corrosion. In the past, the corrosion was classified by pit depth; however, for the purposes of this study, pit depth would not be representative of the severity of damage caused. The different classification levels used in this program are unique to this research and are not representative of other studies, but are recommended for usage in the future. It is important to note that corrosion is not assumed as uniform throughout the entire area, but that it represents the maximum depth of corrosion in that area.

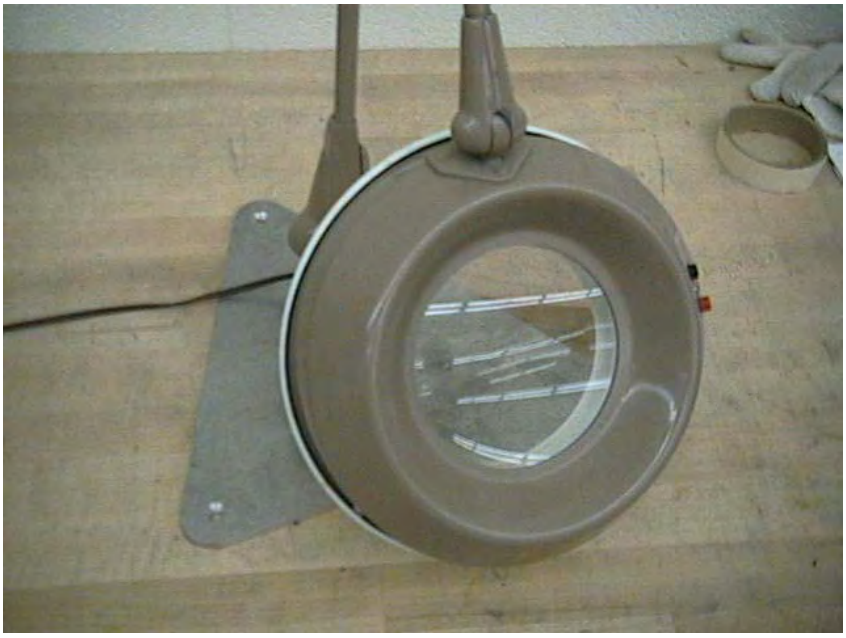

Figure 3-49. A 10-Power Magnifying Glass

Figure 3-50. Microscopic Examination of Parts Using the 7-45 Power Optical Microscope

Cracks and areas of corrosion were sectioned out for further investigation. Corrosion depth was quantified using a digital optical micrometer as well as a pin gage, as illustrated in figures 3-51 and 3-52, respectively. Select cracks were broken open in a manner to preserve fracture face detail, and specimens were mounted for further investigation, as shown in figure 3-53. A scanning electron microscope was used to view fracture face features and determine crack growth mode.

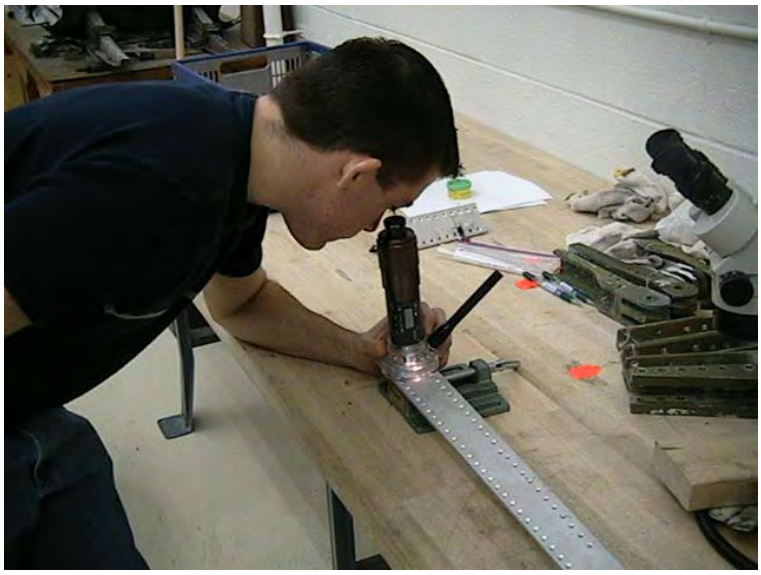

Figure 3-51. Corrosion Depth Assessment With Digital Optical Micrometer

Figure 3-52. Pin Gage for Corrosion Depth Assessment

Figure 3-53. Specimens Mounted for Further Investigation

The following sections describe in detail the results of the microscopic examinations for the visual and supplemental inspection areas, the areas inspected with alternative NDI techniques, defects found during disassembly, and critical structural areas. A summary of all microscopic findings and a comparison between alternative NDI indications and microscopic findings are provided in the last two sections.

3.5.1 Microscopic Examination of Visual Inspection Areas.

The only structural defect found during the visual inspections was an area of corrosion on the left-hand vertical stabilizer skin under the antenna, which is shown in figure 3-54. The total area encompassed by this corrosion is 16.3 square inches, and the deepest corrosion pit was 0.005 inch. Since the skin was 0.02 inch thick in this region, 25% of the thickness was lost due to corrosion, which corresponds to a severe classification.

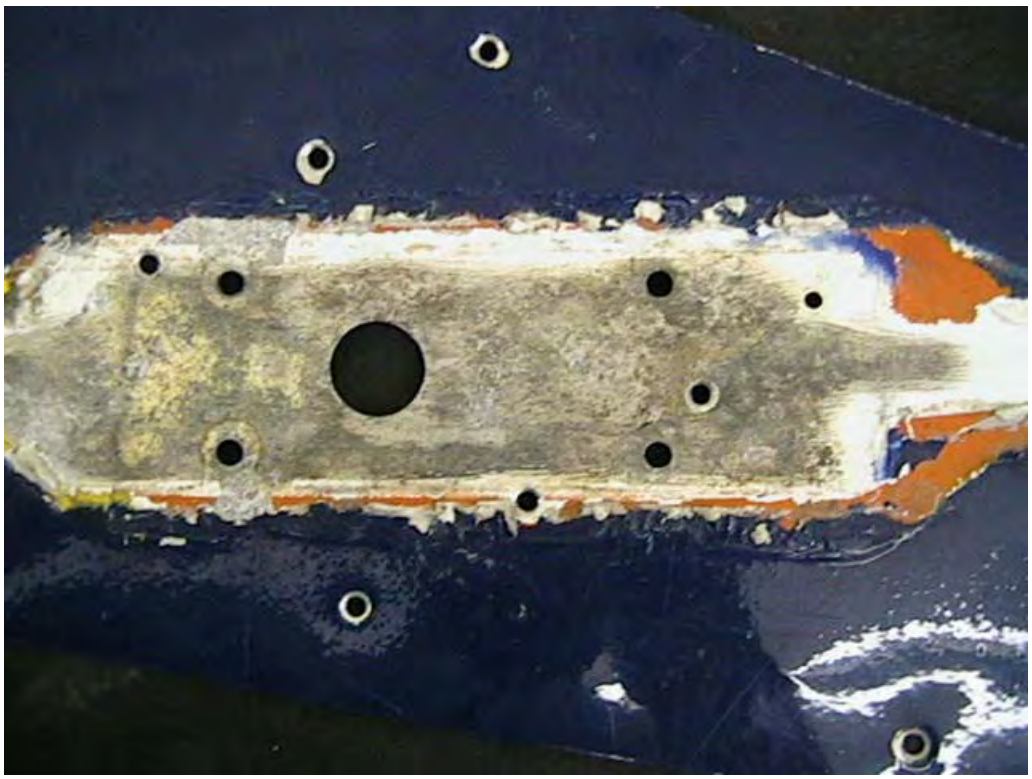

Figure 3-54. Area of Corrosion on the Vertical Stabilizer Skin Under an Antenna

3.5.2 Microscopic Examination of Supplemental Inspection Areas.

All defect areas found during the SID inspections were examined microscopically. Table 3-11 lists the areas found during the SID inspections and the corresponding findings of the microscopic examination of these areas. Detailed descriptions of the examinations conducted on the stub wing attach fittings, wing attach fittings, right stub wing bracket, elevator attach fitting, and engine beams are described in the following sections.

Table 3-11. Microscopic Results of SID Inspection Areas

Method	Indication	Location	Microscopic
Visual	Corrosion	Left stub wing forward lower attach fitting WS 59 SID 57-10-26	4.6% Corrosion
Visual	Removal induced damage	Left stub wing aft upper attach fitting WS 63 SID 57-10-26	Damage
Visual	Removal induced damage	Right stub wing aft lower attach fitting WS 67 SID 57-10-26	Damage
Bolthole eddy current	One crack	Left wing lower front spar WS 67 SID 57-10-16	No defect on spar cap
Bolthole eddy current	Two cracks	Left wing lower front spar WS 87 SID 57-10-16	No defect on spar cap
Bolthole eddy current	One crack	Left wing lower aft auxiliary spar WS 99 SID 57-10-18	No defect on spar cap
Bolthole eddy current	One crack	Left wing lower aft auxiliary spar WS 100 SID 57-10-18	No defect on spar cap
Bolthole eddy current	Three cracks	Left wing lower front spar WS114.5 SID 57-10-16	No defect on spar cap
Surface eddy current	One crack	Right wing outboard engine beam WS 106.8 FS 134.7 SID 54-10-03	0.78-inch crack
Tap test	Disbond	Left wing upper skin trailing edge SID 57-10-21	Unable to examine
Bolthole eddy current	Crack	Right stub wing on angle common to inboard side of outboard rib and forward carry-through beam SID 57-10-14	2.0-inch crack
Bolthole eddy current	Two cracks	Horizontal stabilizer right upper front skin BL 7.5 and BL 8.0 SID 55-10-04	0.07-inch crack 0.04-inch crack
Bolthole eddy current	Hole	Horizontal stabilizer left front spar web BL 7.5 SID 55-10-06	Out of round hole
Bolthole eddy current	One crack	Horizontal stabilizer right upper rear spar BL 1.0 SID 55-10-08	No defect on spar cap
Liquid penetrant	One crack	Horizontal stabilizer left lower rear spar BL 20.88 SID 55-20-02	0.155-inch crack on support bracket

3.5.2.1 Stub Wing Attach Fittings.

All attach fittings on the stub wings were examined microscopically, and areas of corrosion were found on seven of the eight fittings. The forward fittings had areas of more severe corrosion at several locations, including the outer surface and on the attach points. The aft attach fittings exhibited only slight corrosion on three of the fittings. Figures 3-55 and 3-56 show the locations of the stub wing forward and aft attach fittings, respectively.

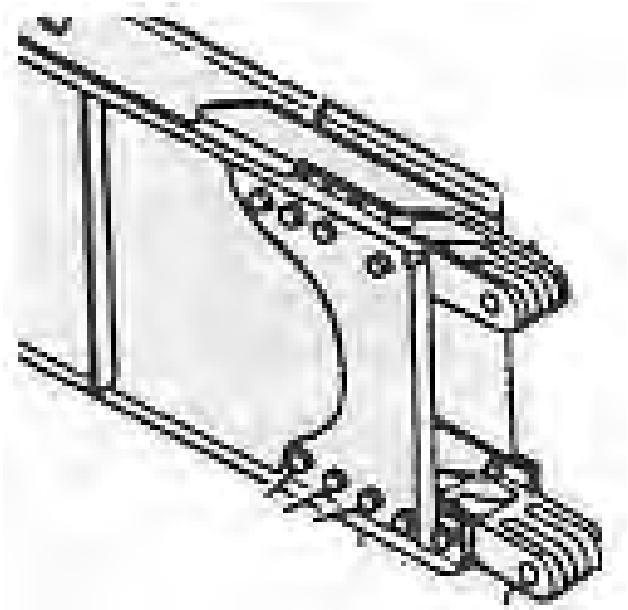

Figure 3-55. Location of Stub Wing Forward Attach Fittings

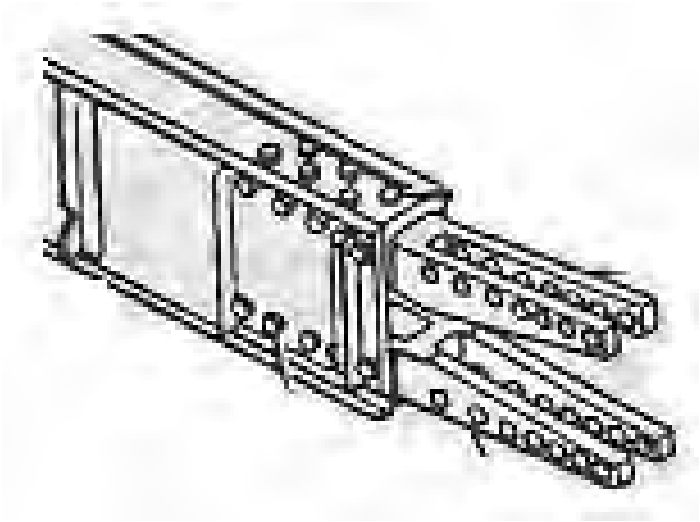

Figure 3-56. Location of Stub Wing Aft Attach Fittings

3.5.2.1.1 Right Stub Wing Attach Fittings.

Figures 3-57 and 3-58 show the corrosion on the right stub wing forward lower and upper attach fittings, respectively. The forward lower attach fitting (P/N 0811350-8) had a maximum corrosion depth of 0.015 inch. The corrosion encompassed an area of 0.03 square inch and caused a 7.1% thickness loss, which is classified as moderate-severe. The forward upper attach fitting (P/N 0811350-7) had a maximum corrosion depth of 0.012 inch. A 10% thickness loss was observed. This corrosion was classified as moderate-severe and encompassed an area of 0.68 square inch. Figures 3-59 and 3-60 show the corrosion on the right stub wing aft lower and upper fittings, respectively. The aft lower attachment fitting (P/N 5011024-1) exhibited light

corrosion with a maximum corrosion depth of 0.002 inch. The area of corrosion was measured to be 0.12 square inch. The thickness loss of this part was 1.0%. A 1.2% thickness loss was observed on the aft upper attach fitting (P/N 5011023-1), which corresponded to light corrosion with a maximum depth of 0.007 inch and an area of 0.015 square inch.

Figure 3-57. Area of Corrosion on the Right Stub Wing Forward Lower Attach Fitting

Figure 3-58. Area of Corrosion on the Right Stub Wing Forward Upper Attach Fitting

Figure 3-59. Area of Corrosion on the Right Stub Wing Aft Lower Attach Fitting

Figure 3-60. Area of Corrosion on the Right Stub Wing Aft Upper Attach Fitting

3.5.2.1.2 Left Stub Wing Attach Fittings.

The corrosion on the left stub wing forward lower attach fitting (P/N 0811350-8) is shown in figure 3-61. This fitting was found to have a maximum pit depth of 0.014 inch and a moderate corrosion area of 0.44 square inch. The maximum thickness loss of this part was 7.0%. The forward upper attach fitting (P/N 0811350-7), as shown in figure 3-62, had a maximum corrosion depth of 0.010 inch and encompassed an area of 0.03 square inch. The thickness loss of this part was 3.3%, which is classified as light-moderate. Figure 3-63 shows the corrosion on the left stub

wing aft lower fitting (P/N 5011024-1). The aft lower attach fitting had a maximum corrosion depth of 0.002 inch, which was classified as light-moderate, and the corrosion encompassed an area of 0.03 square inch. The thickness loss of this part was 3.3%. The aft upper attach fitting (P/N 5011023-1) had no defects.

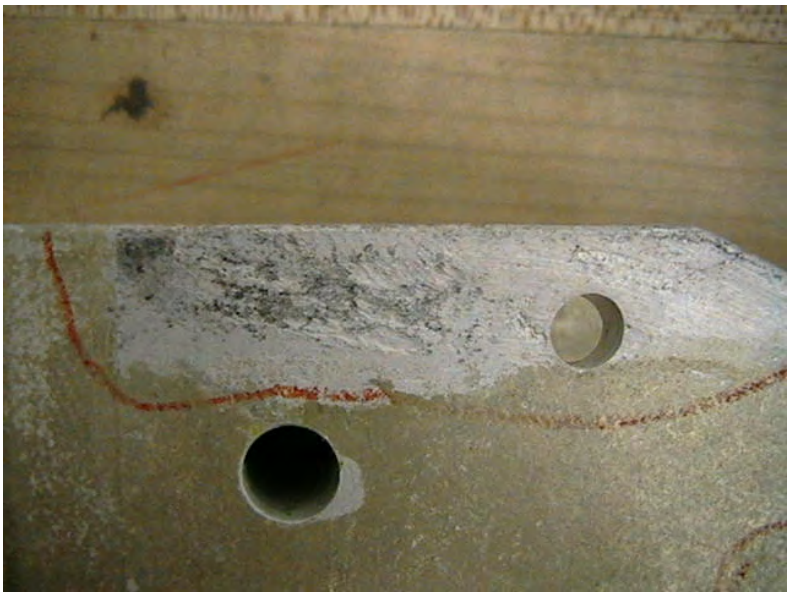

Figure 3-61. Area of Corrosion on the Left Stub Wing Forward Lower Attach Fitting

Figure 3-62. Area of Corrosion on the Left Stub Wing Forward Upper Attach Fitting

Figure 3-63. Area of Corrosion on the Left Stub Wing Aft Lower Attach Fitting

3.5.2.2 Wing Attach Fittings.

During the microscopic examination, all of the wing attach fittings were found to have areas of corrosion. Most of the more significant corrosion was located around the attach points, but slight corrosion was found on different areas of the fittings. Several of the fastener holes had cracked due to mechanical damage. Figures 3-64 and 3-65 show the locations of the wing forward and aft attach fittings.

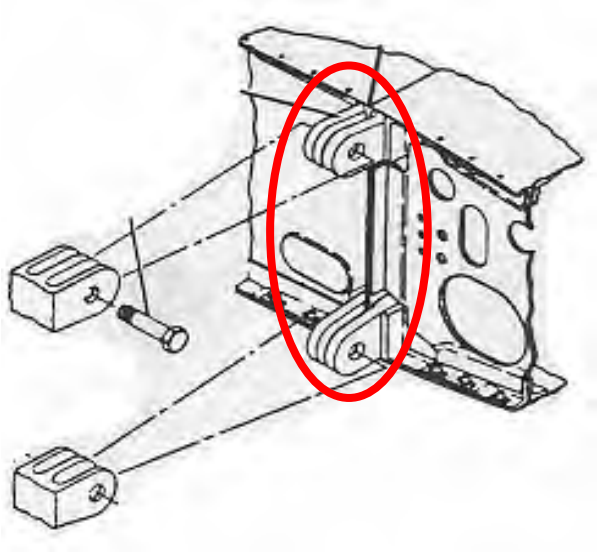

Figure 3-64. Location of Wing Forward Attach Fittings

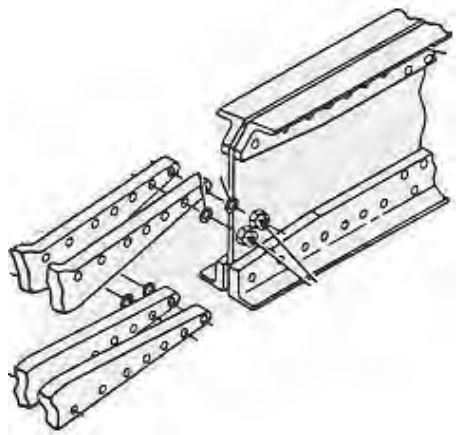

Figure 3-65. Location of Wing Aft Attach Fittings

3.5.2.2.1 Right Wing Attach Fittings.

Figures 3-66 and 3-67 show the corrosion on the right wing forward lower and upper fittings, respectively. The forward lower attach fitting (P/N 0822550-26) had a maximum corrosion depth of 0.02 inch, which was classified as light-moderate, and the corrosion encompassed an area of 0.21 square inch. The thickness loss of this part was 3.0%. The forward upper attach fitting (P/N 0822550-24) showed a reduction in thickness of 2.6% due to corrosion, which was classified as light-moderate. This fitting had a maximum corrosion depth of 0.025 inch, and encompassed an area of 0.04 square inch. Figures 3-68 and 3-69 show the corrosion on the right wing aft lower and upper fittings, respectively. The aft lower attach fitting (P/N 0822550-20) had a maximum corrosion depth of 0.008 inch, which was classified as light, and the corrosion encompassed an area of 0.03 square inch. The thickness loss on this part was 2.0%. The aft upper attach fitting (P/N 0822550-22) exhibited light corrosion with a maximum pit depth of 0.023 inch. The corrosion covered an area of 0.42 square inch and caused a 1.6% reduction in part thickness.

Figure 3-66. Area of Corrosion on the Right Wing Forward Lower Attach Fitting

Figure 3-67. Area of Corrosion on the Right Wing Forward Upper Attach Fitting

Figure 3-68. Area of Corrosion on the Right Wing Aft Lower Attach Fitting

Figure 3-69. Area of Corrosion on the Right Wing Aft Upper Attach Fitting

3.5.2.2.2 Left Wing Attach Fittings.

Figures 3-70 and 3-71 show the corrosion on the left wing forward lower and upper attach fittings, respectively. The forward lower attach fitting (P/N 0822550-25) had a light-moderate 1.04-square-inch area of corrosion with a maximum pit depth of 0.013 inch, which resulted in a 5.0% thickness loss due to corrosion. The forward upper attach fitting (P/N 0822550-23) had a maximum corrosion depth of 0.015 inch, which was also classified as light-moderate, and the corrosion encompassed an area of 0.07 square inch. The thickness loss of this part was 4.0%. Figures 3-72 and 3-73 show the corrosion on the left wing aft lower and upper attach fittings, respectively. The aft lower attach fitting (P/N 0822550-19) had a light-moderate area of corrosion with a maximum corrosion depth of 0.008 inch that encompassed an area of 0.96 square inch. The thickness loss of this part was 4.6%. The aft upper attach fitting (P/N 0822550-21) had a maximum corrosion depth of 0.010 inch, which was classified as light, and the corrosion encompassed an area of 0.18 square inch. The thickness loss of this part was 1.6%.

Figure 3-70. Area of Corrosion on the Left Wing Forward Lower Attach Fitting

Figure 3-71. Area of Corrosion on the Left Wing Forward Upper Attach Fitting

Figure 3-72. Area of Corrosion on the Left Wing Aft Lower Attach Fitting

Figure 3-73. Area of Corrosion on the Left Wing Aft Upper Attach Fitting

3.5.2.3 Right Stub Wing Bracket.

Figure 3-74 shows the location of the right stub wing bracket, which was found to be cracked during the SID inspection. Figure 3-75 shows a 2.0-inch crack on the bracket and figure 3-76 shows a fractograph of this crack, which was determined to be caused by fatigue. Fatigue striation lines can be seen running diagonally from the top left corner to the bottom right corner.

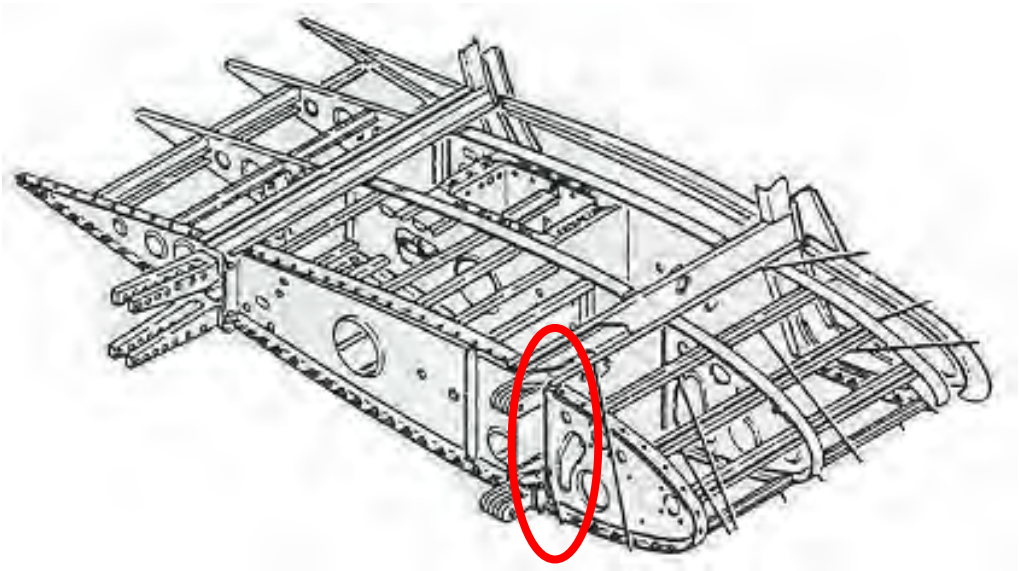

Figure 3-74. Location of the Right Stub Wing Bracket

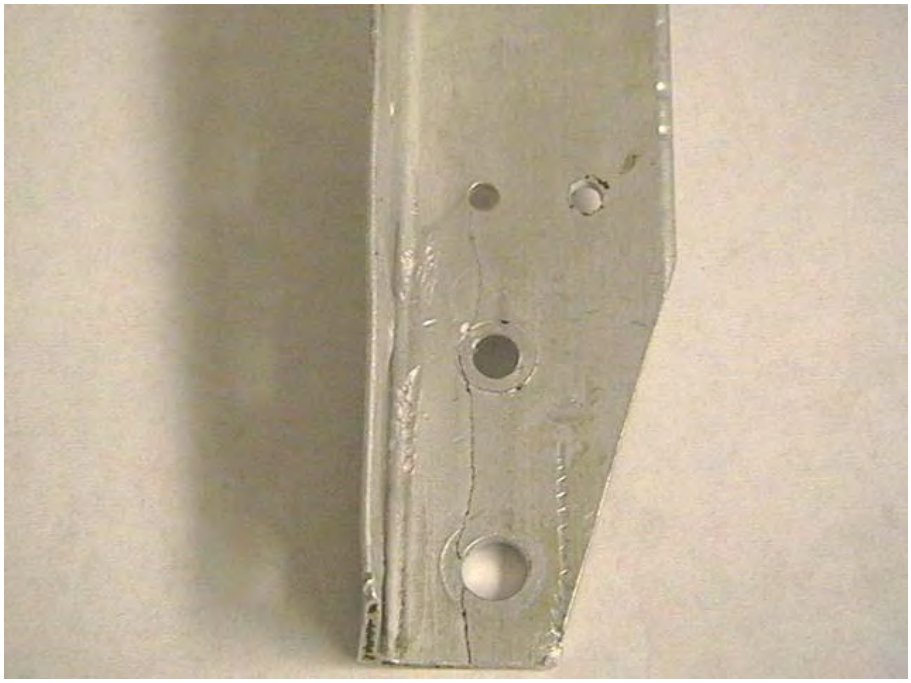

Figure 3-75. Crack in the Right Stub Wing Bracket

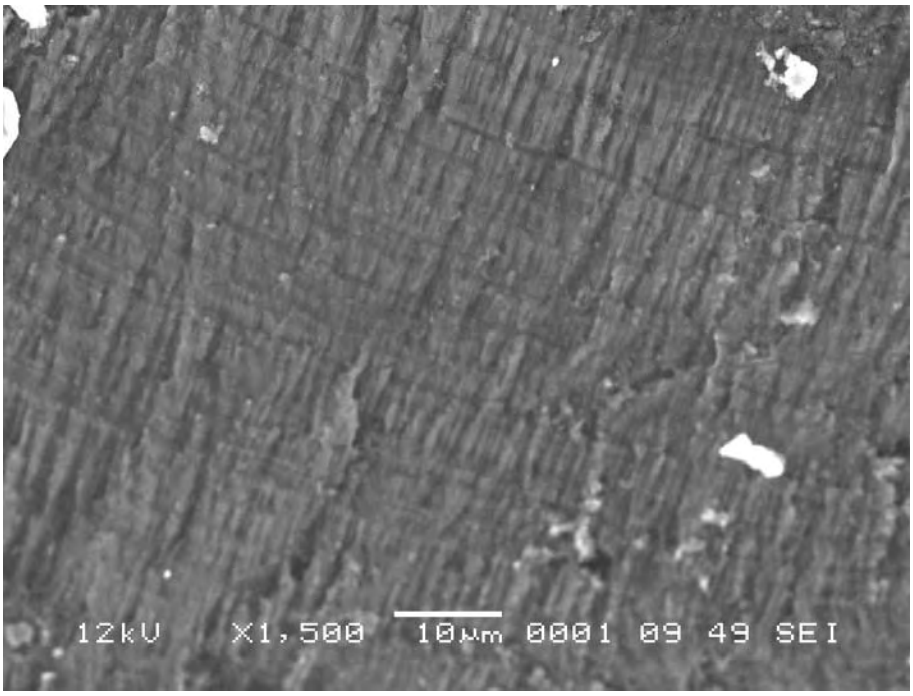

Figure 3-76. Fractograph of Crack in the Right Stub Wing Bracket

3.5.2.4 Elevator Attach Fitting.

Figure 3-77 shows the location of the elevator attach fitting brackets that attached the elevator hinge fitting (P/Ns 5334119-1 and 5334119-2) to the rear spar of the horizontal stabilizer. Figure 3-78 shows the left inboard bracket for the elevator attach fitting, and figure 3-79 shows a 0.155-inch crack on the left inboard bracket.

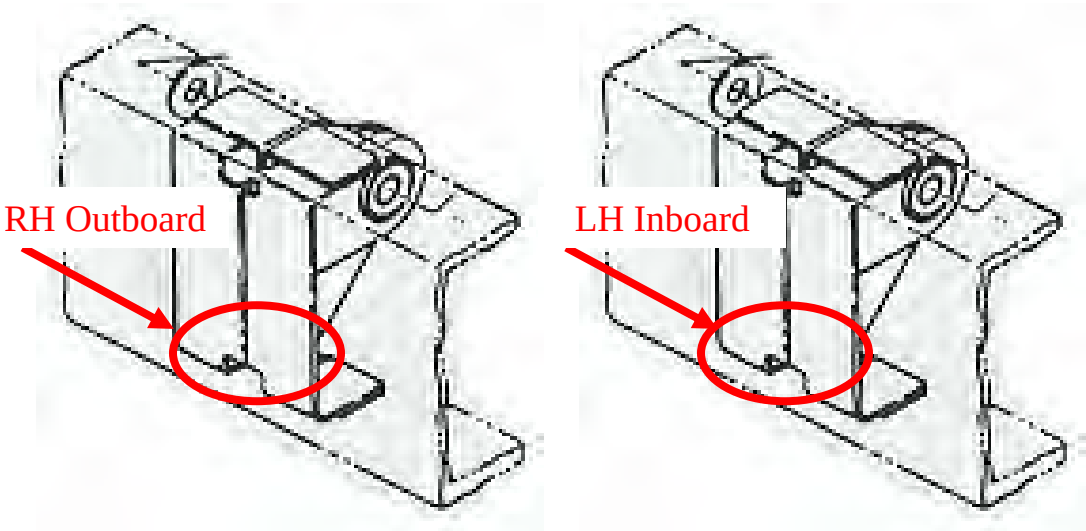

Figure 3-77. Location of Cracks on the Left Inboard Elevator Attach Fitting Brackets

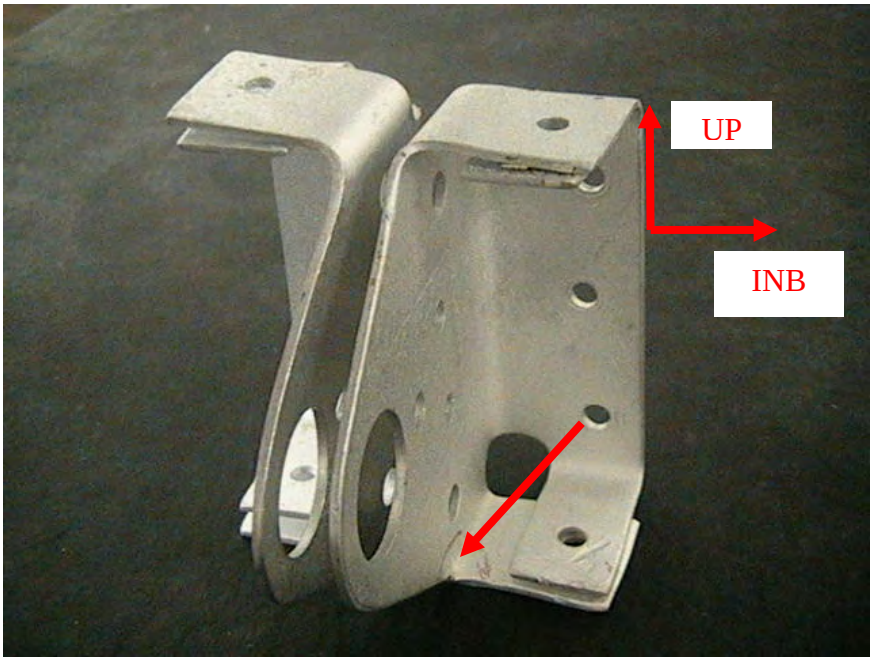

Figure 3-78. Left Inboard Elevator Attach Fitting Bracket With Crack

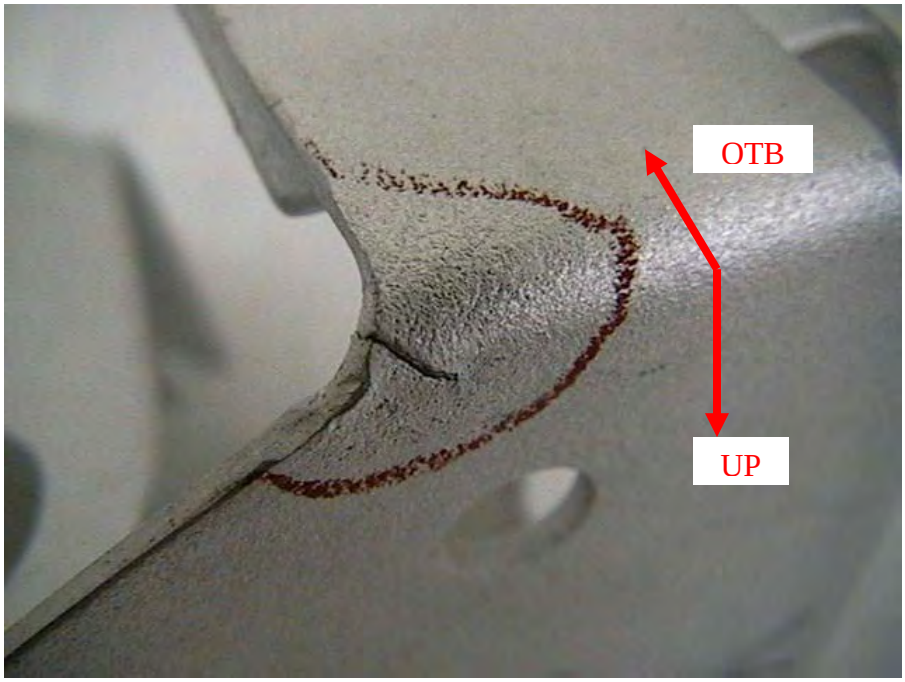

Figure 3-79. Crack on the Left Inboard Elevator Attach Fitting Bracket

3.5.2.5 Engine Beam.

Only one crack was found during the supplemental inspection of the engine beam. Figure 3-80 shows the location of a crack on an angle attachment (P/N 5650204-13) on the left wing engine structure, while figure 3-81 shows the cracked part.

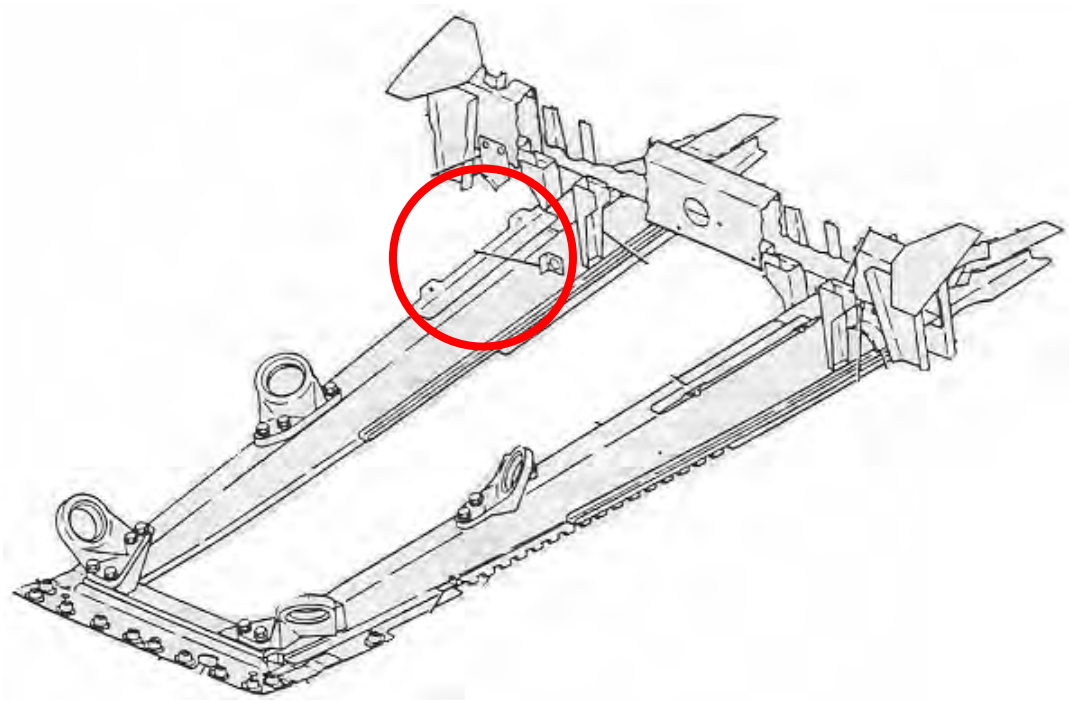

Figure 3-80. Location of Crack on the Left Wing Engine Structure

Figure 3-81. Crack in the Angle Attachment

3.5.3 Microscopic Examination of Areas Inspected With Alternative NDI.

All areas that were inspected during the alternative NDI assessment were also examined microscopically to validate and quantify findings. These areas included front and rear spars for both wings, engine beam structure from both wings, right- and left-hand fuselage channels, and front and rear spars for the horizontal and vertical stabilizers.

3.5.3.1 Microscopic Examination of Left Wing.

Both the front and rear spars of the left wing were examined, as well as the auxiliary spars and the wing attach fittings. The results of the microscopic examination of the wing attach fittings were presented in section 3.5.2. Much of the area of the front and rear spars was found to be corroded, with some areas of severe corrosion. Several areas of the wing spars appeared to not have been anodized, which could be a cause for the severe corrosion. Slight corrosion was observed on the auxiliary spars, but it was loosely scattered.

3.5.3.1.1 Left Wing Front Spar.

Figure 3-82 shows the location of the left wing front spar, and figure 3-83 shows several areas of corrosion found on the lower cap of the left wing front spar. The maximum depth of corrosion in this area is 0.011 inch. The largest amount of thickness loss was 3.0% on the spar cap, which was classified as light-moderate, and severe 11.0% corrosion on the tee web connection. Figure 3-84 shows an area of corrosion on the upper cap. The maximum depth of corrosion in this area was 0.030 inch, which was classified as severe. The largest amount of thickness loss was 18.2% on the spar cap and 10.0% on the tee web connection.

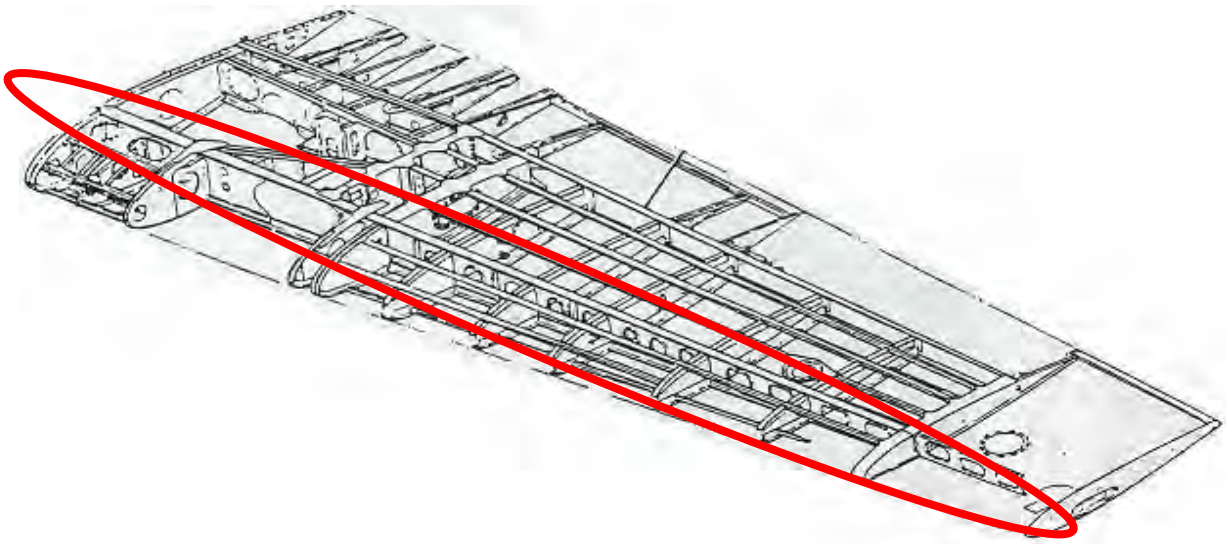

Figure 3-82. Location of Left Wing Front Spar

Figure 3-83. Area of Corrosion on the Left Wing Front Spar Lower Cap

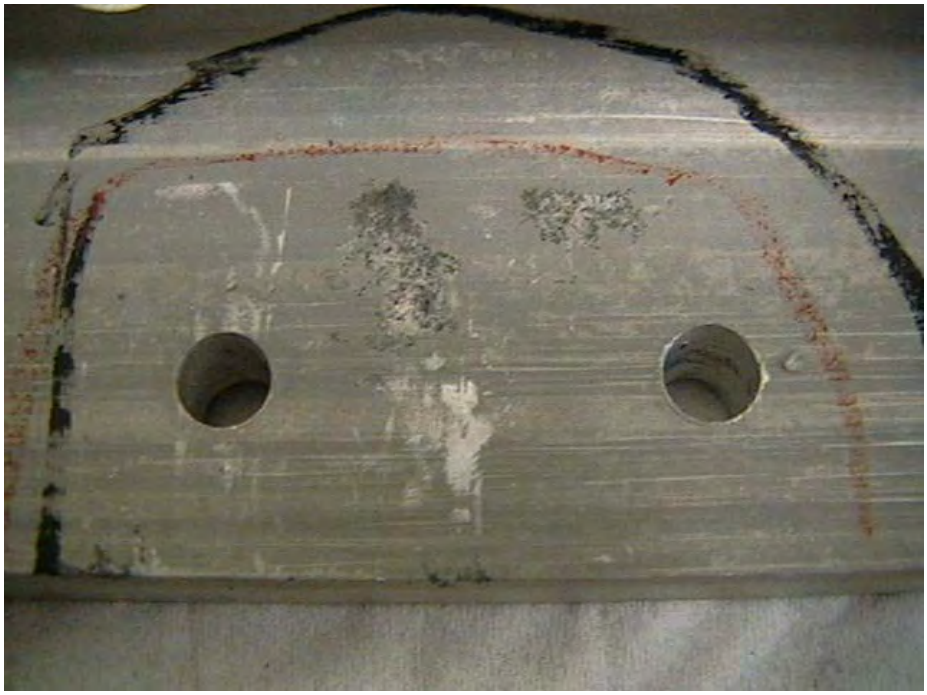

Figure 3-84. Area of Corrosion on the Left Wing Front Spar Upper Cap

3.5.3.1.2 Left Wing Rear Spar.

Figure 3-85 shows the location of the left wing rear spar. Figures 3-86 to 3-88 show several areas of corrosion on the left wing rear spar lower cap. The maximum depth of corrosion on the left wing rear spar was 0.030 inch, which was classified as severe. The greatest thickness loss was 27.0% on the spar cap and 38.3% on the tee web connection. Figures 3-89 to 3-90 show several areas of corrosion on the upper cap. The maximum depth of corrosion in this area was 0.014 inch, which was classified as severe. The largest amount of thickness loss was 17.5% on the spar cap, and 10.7% on the tee web connection. Figure 3-91 shows a 1.24-inch crack, which was caused by fatigue, found on a vertical support on the left wing rear spar at WS 69.

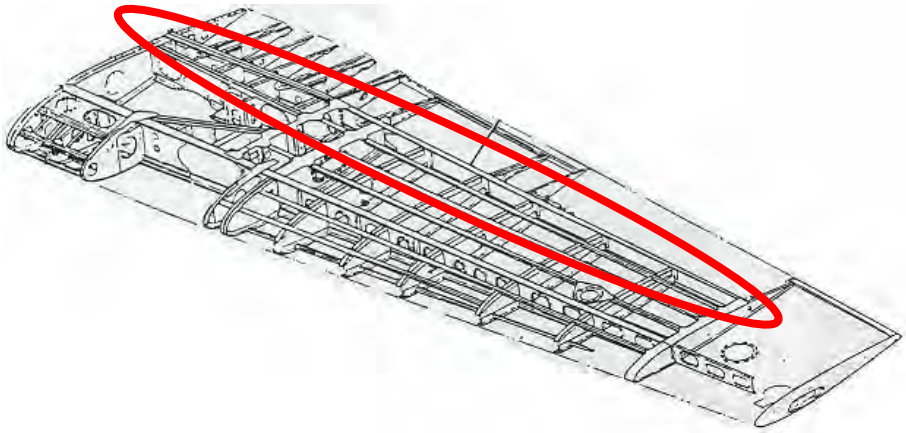

Figure 3-85. Location of the Left Wing Rear Spar

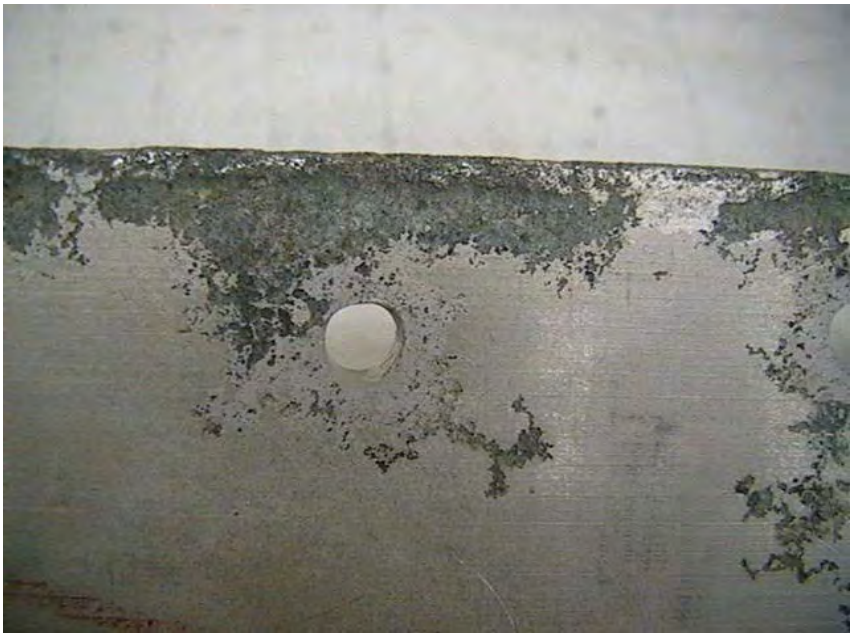

Figure 3-86. Area of Corrosion on the Left Wing Rear Spar Lower Cap, View 1

Figure 3-87. Area of Corrosion on the Left Wing Rear Spar Lower Cap, View 2

Figure 3-88. Area of Corrosion on the Left Wing Rear Spar Lower Cap, View 3

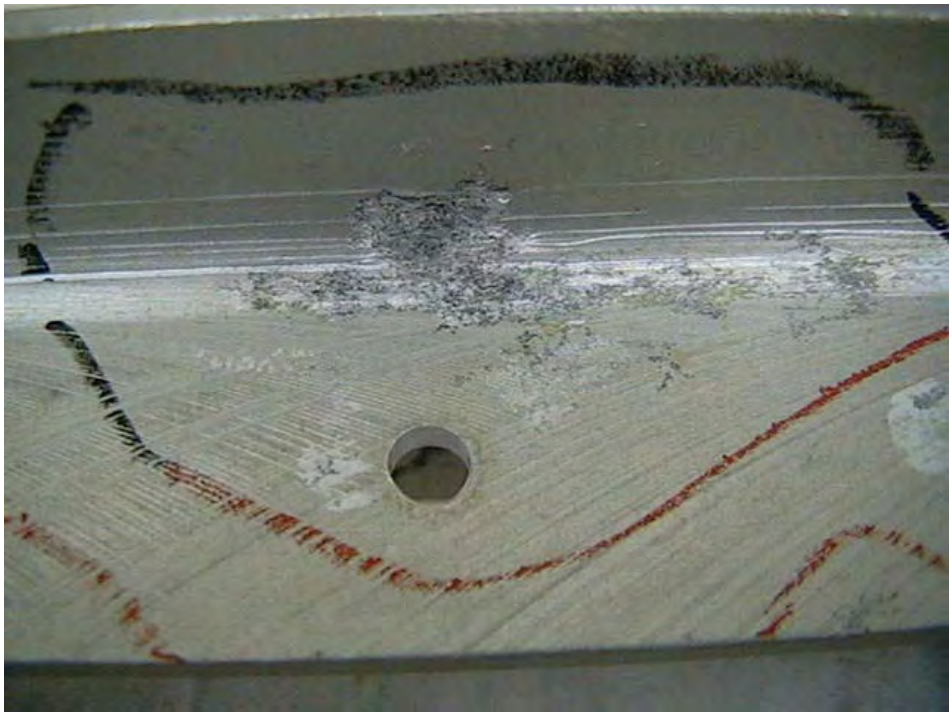

Figure 3-89. Area of Corrosion on the Left Wing Rear Spar Upper Cap, View 1

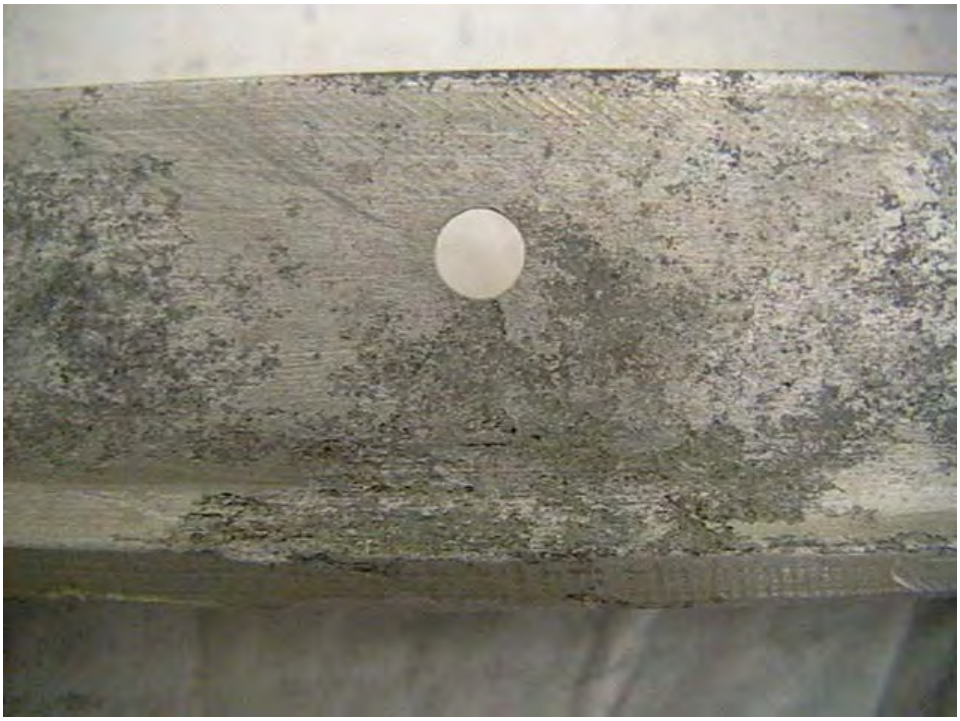

Figure 3-90. Area of Corrosion on the Left Wing Rear Spar Upper Cap, View 2

Figure 3-91. Fatigue Crack on a Vertical Support on the Left Wing Rear Spar at WS 69

3.5.3.1.3 Left Wing Aft Auxiliary Spar.

Figure 3-92 shows the location of the left wing aft auxiliary spar, and figure 3-93 shows a 0.565-inch crack found on the upper cap at WS 113, which was determined to be caused by fatigue. Figure 3-94 shows an area of corrosion on the lower cap. The maximum depth of the moderate-severe corrosion on the lower cap was 0.005 inch, and the largest amount of thickness loss on the cap was 7.7%. Figure 3-95 shows an area of corrosion on the web with a maximum depth of 0.012 inch, which was classified as severe. The largest amount of thickness loss on the web was 18.5%.

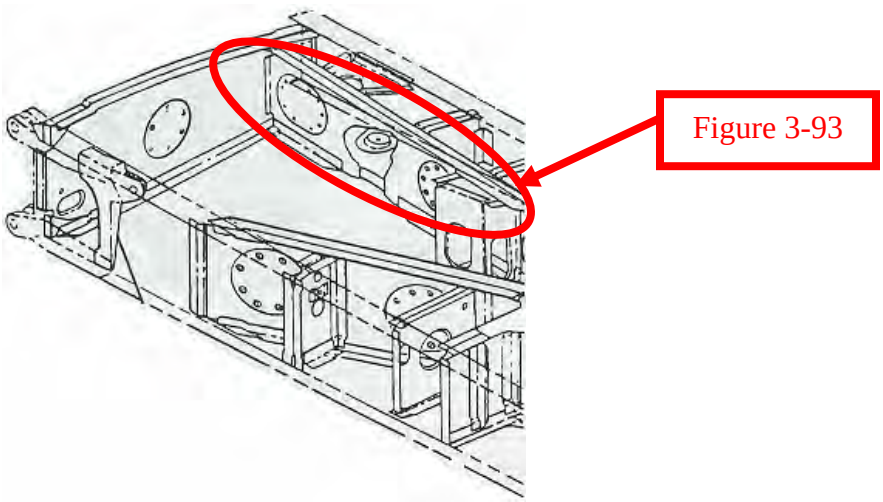

Figure 3-92. Location of Left Wing Aft Auxiliary Spar

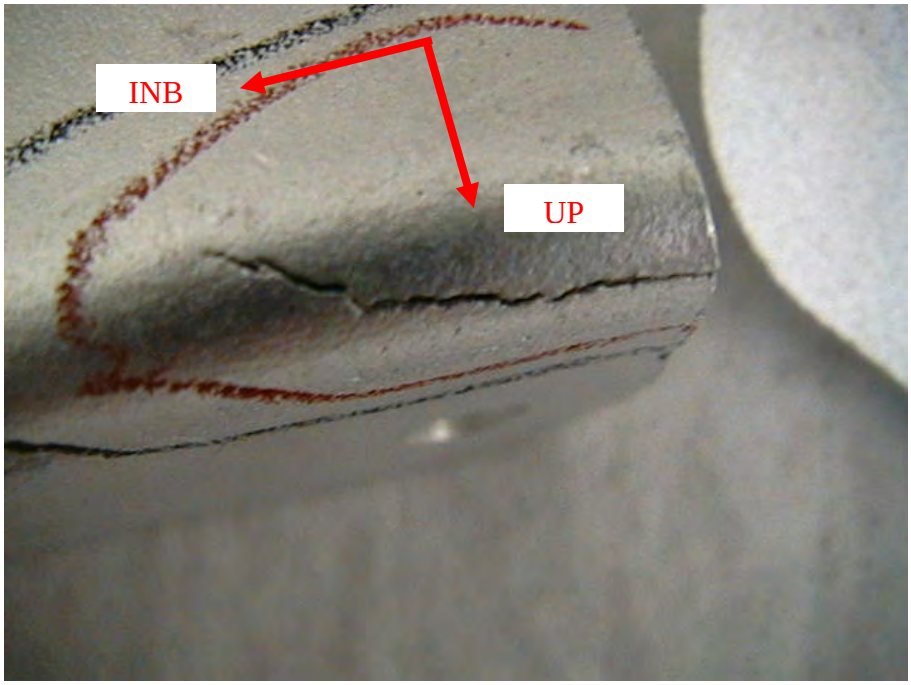

Figure 3-93. Fatigue Crack on the Left Wing Aft Auxiliary Spar Upper Cap at WS 113

Figure 3-94. Area of Corrosion on the Left Wing Aft Auxiliary Spar Lower Cap

Figure 3-95. Area of Corrosion on the Left Wing Aft Auxiliary Spar Web

3.5.3.1.4 Left Wing Landing Gear Attach Fittings.

Figure 3-96 shows the location of the left wing landing gear actuator attach fitting (P/N 5122725-3), and figure 3-97 shows one of the more significant areas of corrosion located on this fitting. The maximum depth of corrosion on the fitting was 0.006 inch, which was classified as light-moderate. The largest amount of thickness loss observed on the fitting was 4.0%.

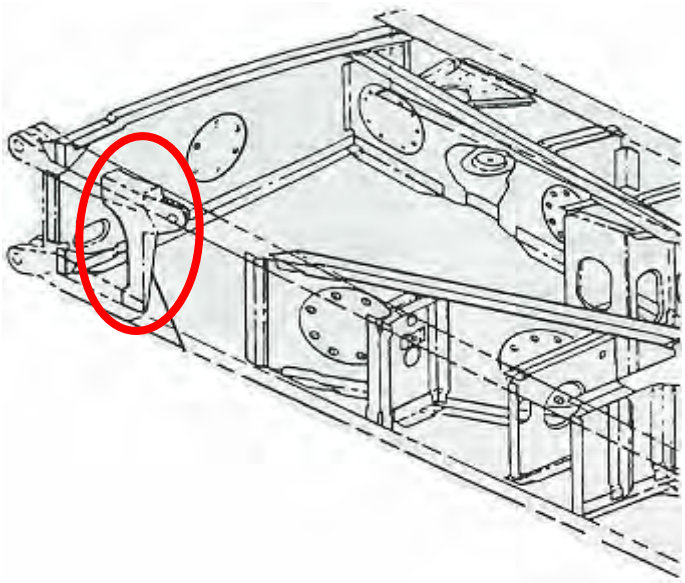

Figure 3-96. Location of Left Wing Landing Gear Actuator Attach Fitting

Figure 3-97. Area of Corrosion on the Left Wing Landing Gear Actuator Attach Fitting

Figure 3-98 shows the location of the left wing forward auxiliary spar landing gear attach fitting, (P/N 5122720-1), and figure 3-99 shows a severe area of corrosion on the upper surface of this fitting. The maximum depth of the corrosion on the fitting was 0.02 inch, and the largest amount of thickness loss was 20.0%.

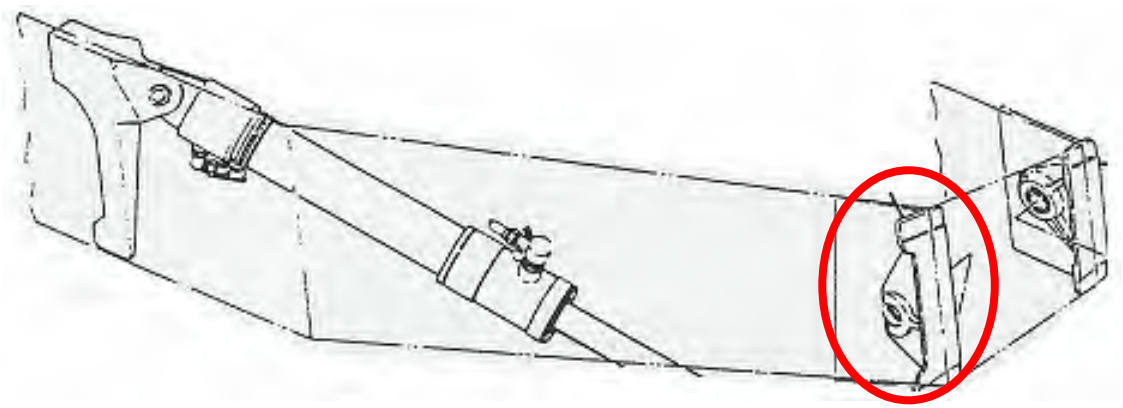

Figure 3-98. Location of Left Wing Forward Auxiliary Spar Landing Gear Attach Fitting

Figure 3-99. Area of Corrosion on the Left Wing Forward Auxiliary Spar Landing Gear Attach Fitting

3.5.3.2 Microscopic Examination of Right Wing.

Both the front and rear spars of the right wing were examined, as well as the auxiliary spars and the wing attach fittings. The microscopic examination results for the wing attach fittings were discussed in section 3.5.2. Much of the area of the front and rear spars was found to be corroded, with some areas of severe corrosion. Several areas of the wing spar appeared to not have been anodized, which could be a cause for the severe corrosion. The auxiliary spars had slight corrosion, but it was observed to be loosely scattered.

3.5.3.2.1 Right Wing Front Spar.

Figure 3-100 shows the location of the right wing front spar, and figure 3-101 shows an area of chafing caused by the right wing engine beam at WS 87. Figures 3-102 and 3-103 show several areas of corrosion on the lower spar cap. The maximum depth of the corrosion measured was 0.004 inch, which was classified as light-moderate. The largest amount of thickness loss was 2.7% on the spar cap and 2.1% on the tee web connection. Figures 3-104 and 3-105 show two areas of corrosion on the upper spar cap. The maximum depth of the corrosion was 0.004 inch, which was classified as light-moderate. The largest amount of thickness loss was 2.0% on the spar cap and 3.5% on the tee web connection. Figure 3-106 shows an area of slight pitting on the web. The maximum depth of the corrosion was 0.012 inch, which was classified as severe, and the largest amount of thickness loss was 20%.

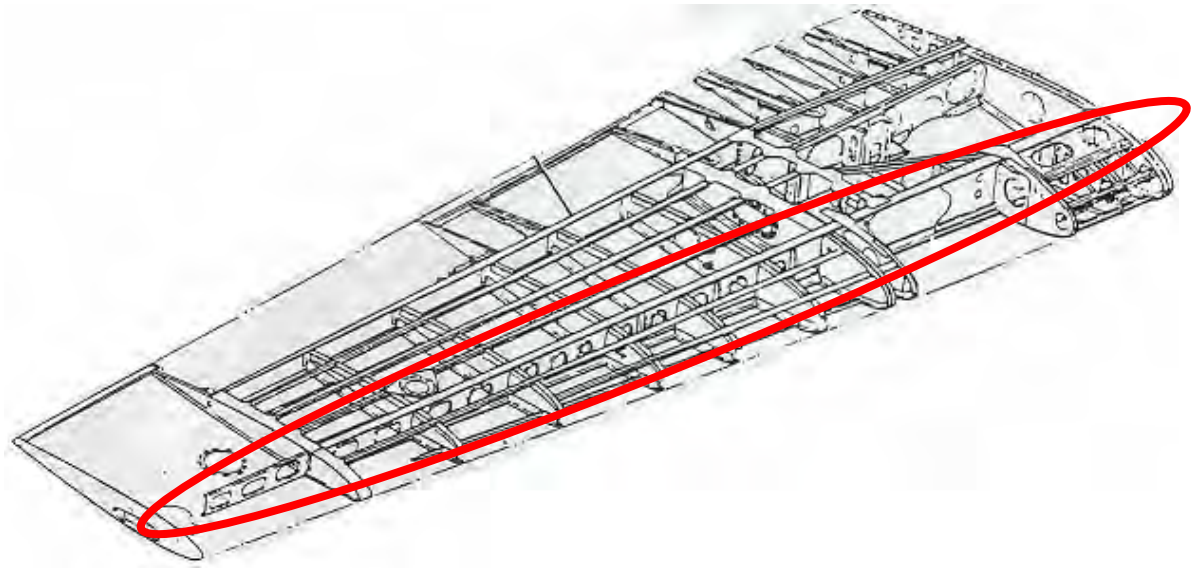

Figure 3-100. Location of Right Wing Front Spar

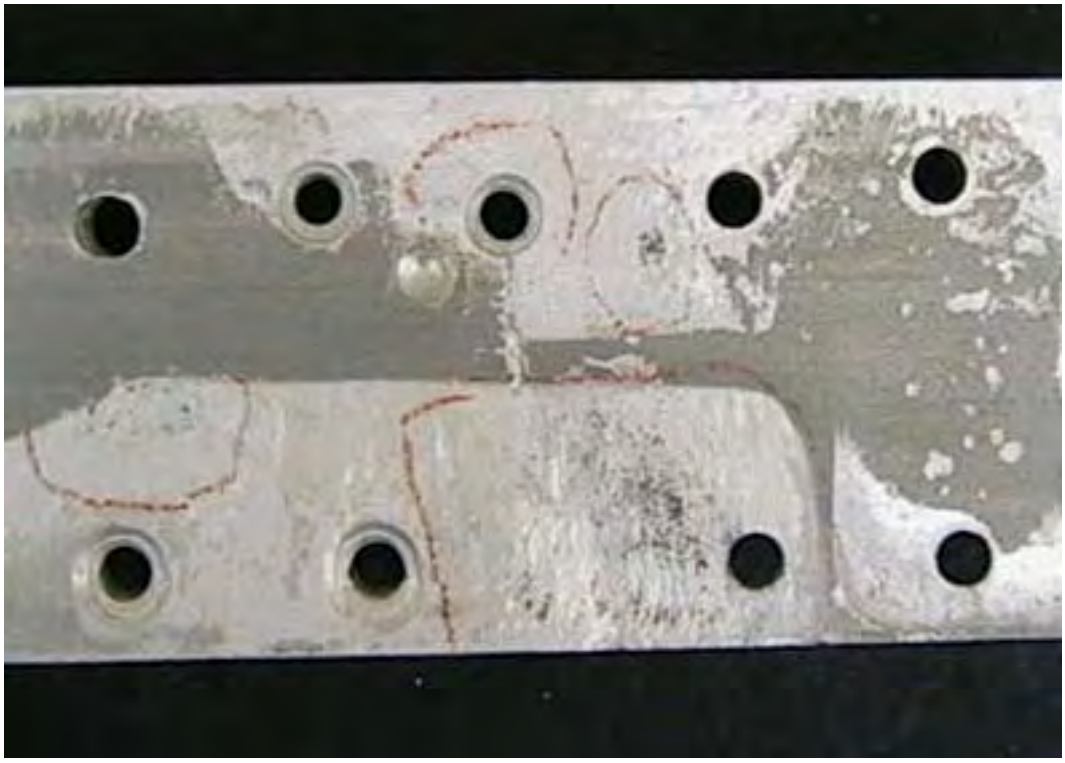

Figure 3-101. Wear Caused by Chafing of Engine Beam

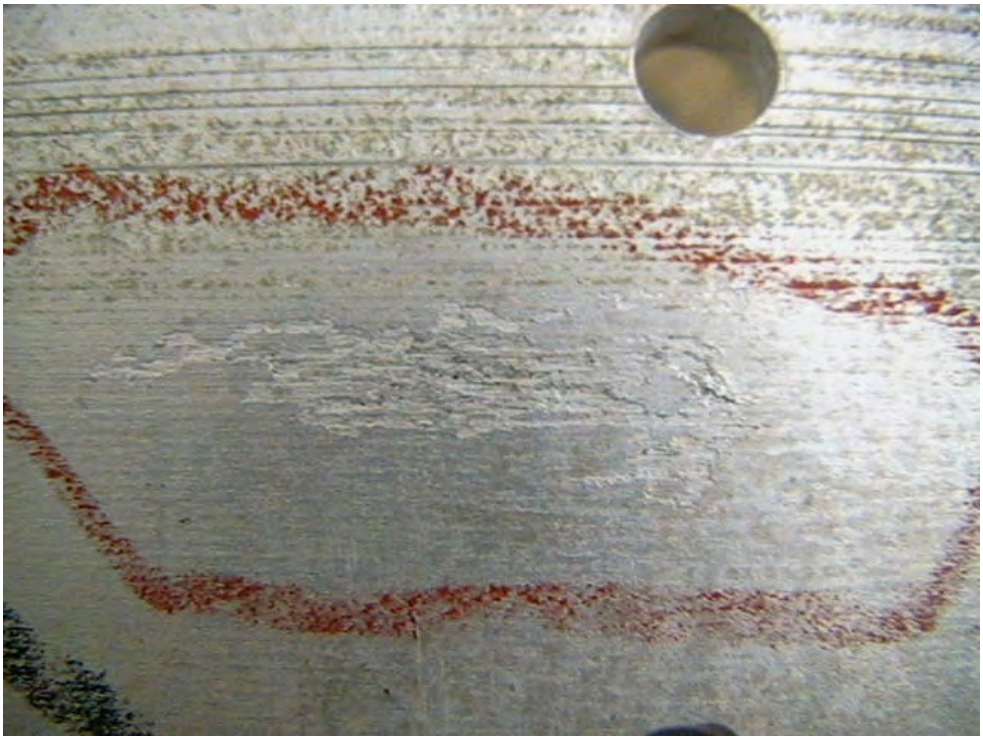

Figure 3-102. Area of Corrosion on the Right Wing Front Spar Lower Cap, View 1

Figure 3-103. Area of Corrosion on the Right Wing Front Spar Lower Cap, View 2

Figure 3-104. Area of Corrosion on the Right Wing Front Spar Upper Cap, View 1

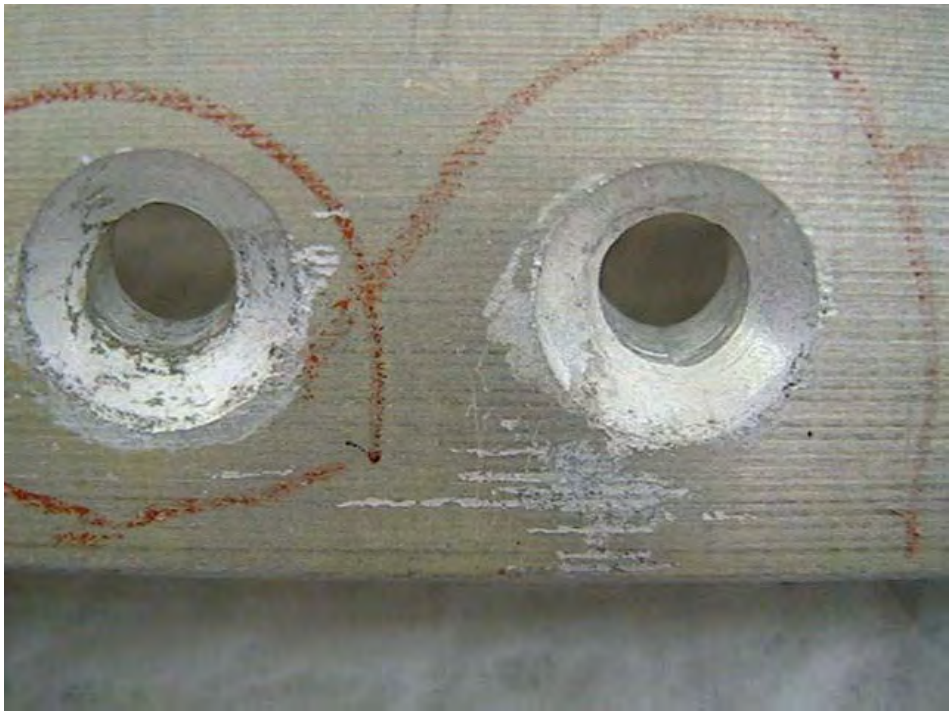

Figure 3-105. Area of Corrosion on the Right Wing Front Spar Upper Cap, View 2

Figure 3-106. Area of Corrosion on the Right Wing Front Spar Web

3.5.3.2.2 Right Wing Rear Spar.

Figure 3-107 shows the location of the right wing rear spar, and figure 3-108 shows an area of corrosion on the lower spar cap. The maximum depth of the corrosion was 0.005 inch. The largest amount of thickness loss was 5.9% due to moderate corrosion on the spar cap and 15.4% due to severe corrosion on the tee web connection. Figures 3-109 and 3-110 show areas of corrosion on the upper spar cap. The largest amount of thickness loss on the right wing rear spar was 4.8% on the spar cap and 5.0% on the tee web connection due to light-moderate corrosion. The maximum pit depth of the corrosion measured 0.006 inch.

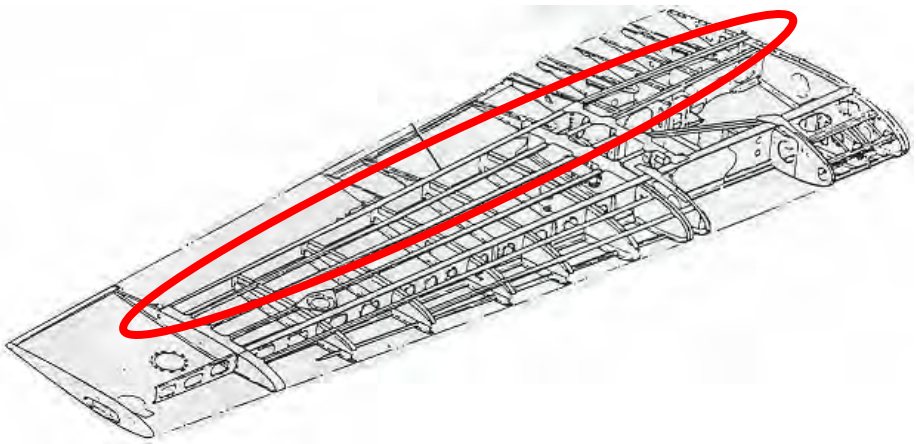

Figure 3-107. Location of Right Wing Rear Spar

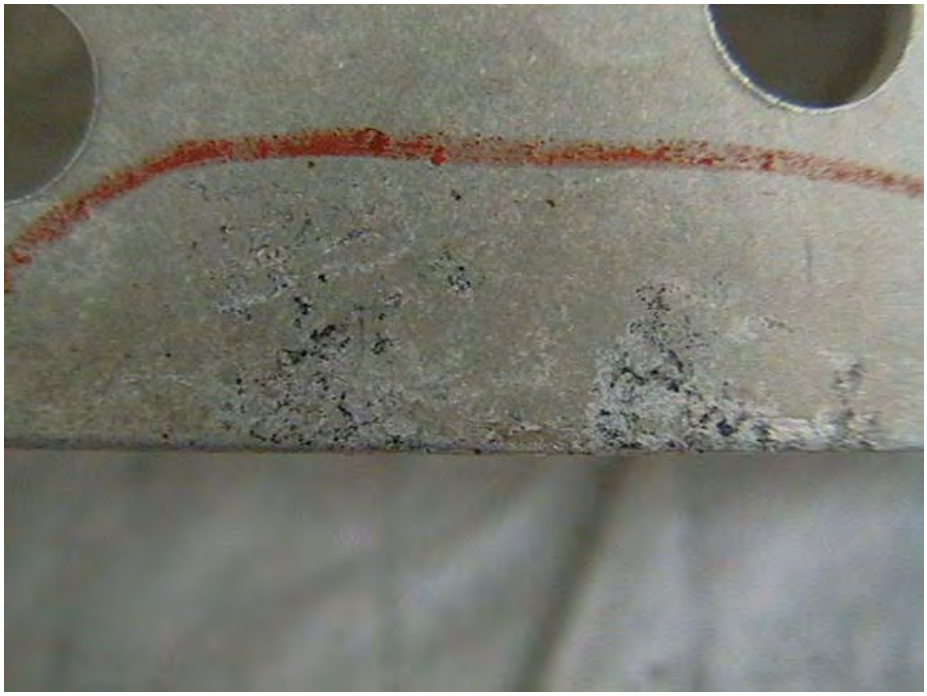

Figure 3-108. Area of Corrosion on the Right Wing Rear Spar Lower Cap

Figure 3-109. Area of Corrosion on the Right Wing Rear Spar Upper Cap, View 1

Figure 3-110. Area of Corrosion on the Right Wing Rear Spar Upper Cap, View 2

3.5.3.2.3 Right Wing Aft Auxiliary Spar.

The location of the right wing aft auxiliary spar is shown in figure 3-111, while figure 3-112 shows two cracks on the lower cap at WS 108-110. Crack A is 1.74 inches long, and crack B is 1.0 inch long. Both cracks were determined to be caused by fatigue. Figure 3-113 shows an area of corrosion on the upper cap. The corrosion was classified as severe with a maximum pit depth of 0.012 inch and a thickness loss of 17.1%. Figure 3-114 shows an area of corrosion on the web. The maximum depth of the corrosion is 0.008 inch, which was classified as severe, and the largest amount of thickness loss was 12.3%.

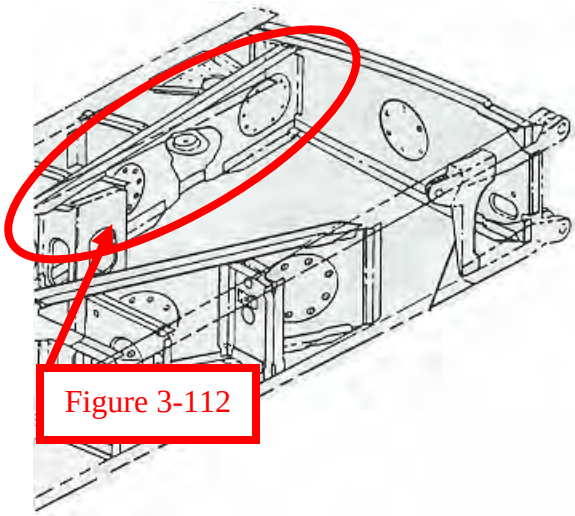

Figure 3-111. Location of Right Wing Aft Auxiliary Spar

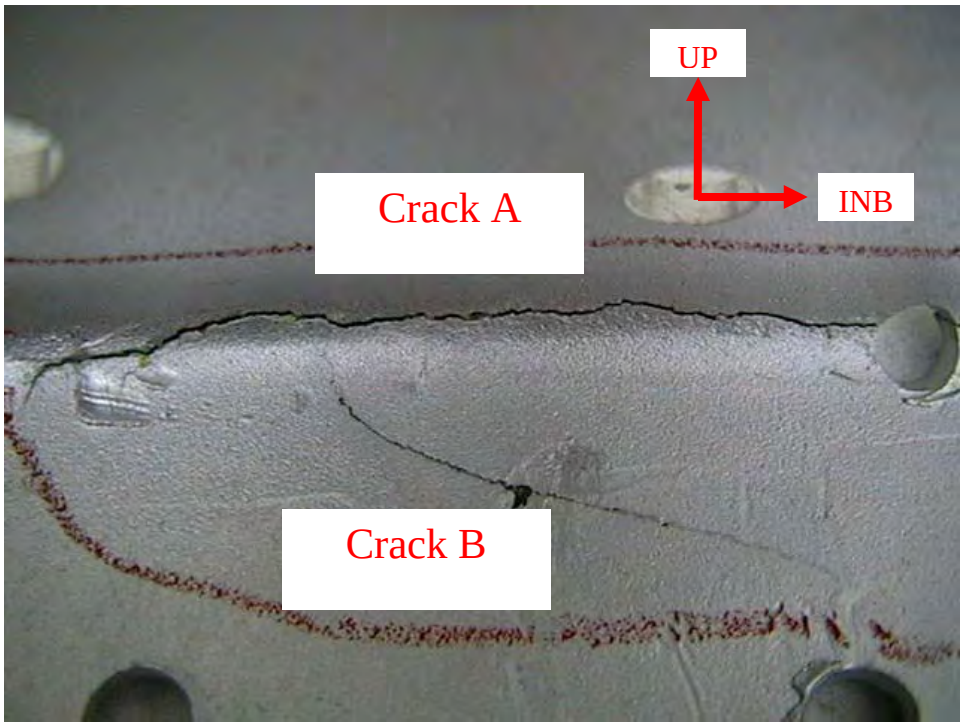

Figure 3-112. Two Cracks on the Right Wing Aft Auxiliary Spar Lower Cap

Figure 3-113. Area of Corrosion on the Right Wing Aft Auxiliary Spar Upper Cap

Figure 3-114. Area of Corrosion on the Right Wing Aft Auxiliary Spar Web

3.5.3.2.4 Right Wing Forward Auxiliary Spar.

The location of the right wing forward auxiliary spar is shown in figure 3-115, and a total of two cracks were found on this auxiliary spar. Figure 3-116 shows crack A on the spar's lower cap at WS 79, and figure 3-117 shows crack B at WS 114. Both cracks are 0.245 inch long and through the thickness. Figure 3-118 shows an area of corrosion on the upper cap. The maximum depth of corrosion is 0.002 inch, which was classified as light-moderate, and the largest amount of thickness loss was 3.1%.

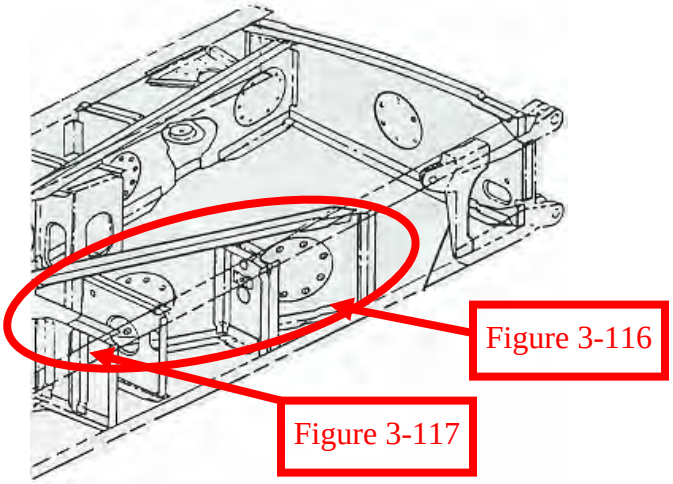

Figure 3-115. Location of Right Wing Forward Auxiliary Spar

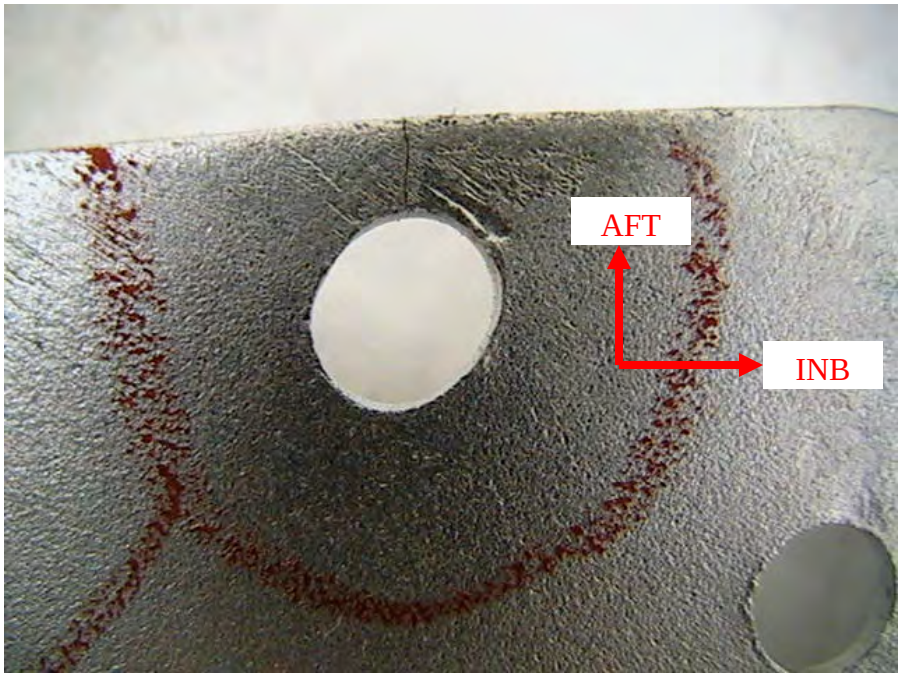

Figure 3-116. Crack A on the Right Wing Forward Auxiliary Spar Lower Cap

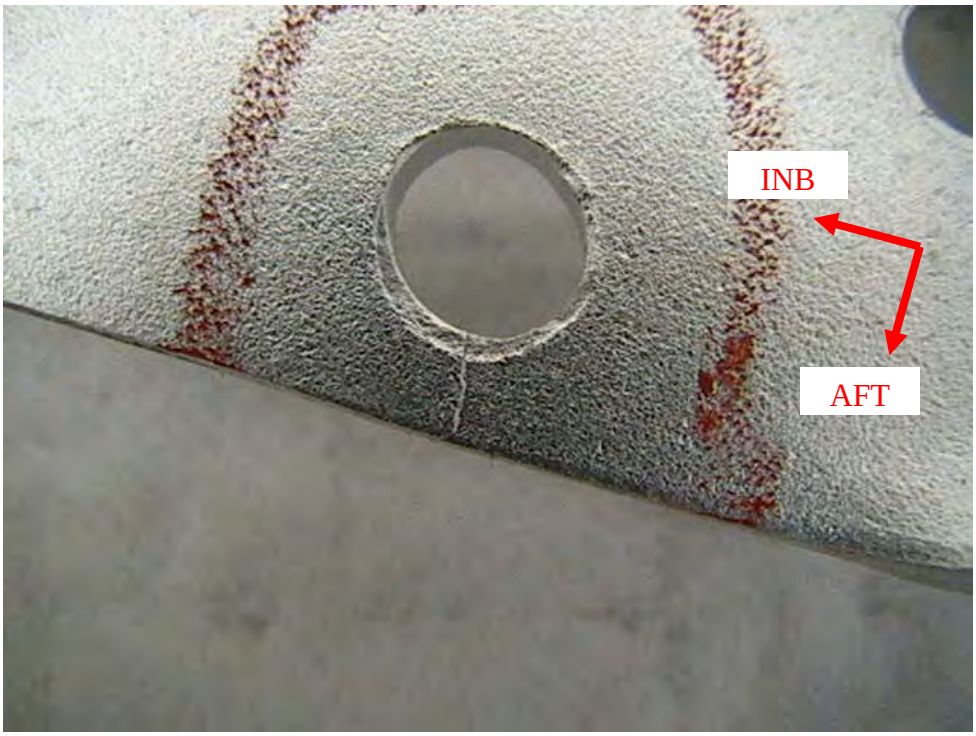

Figure 3-117. Crack B on the Right Wing Forward Auxiliary Spar Lower Cap

Figure 3-118. Area of Corrosion on the Right Wing Forward Auxiliary Spar Upper Cap

3.5.3.2.5 Right Wing Landing Gear Attach Fittings.

Figure 3-119 shows the location of the right wing aft auxiliary spar landing gear attach fitting (P/N 5122724-5), while figure 3-120 shows an area of corrosion found on this attach fitting. The maximum depth of the corrosion was 0.002 inch, which was classified as light, and the largest amount of thickness loss on this fitting was 2.0%.

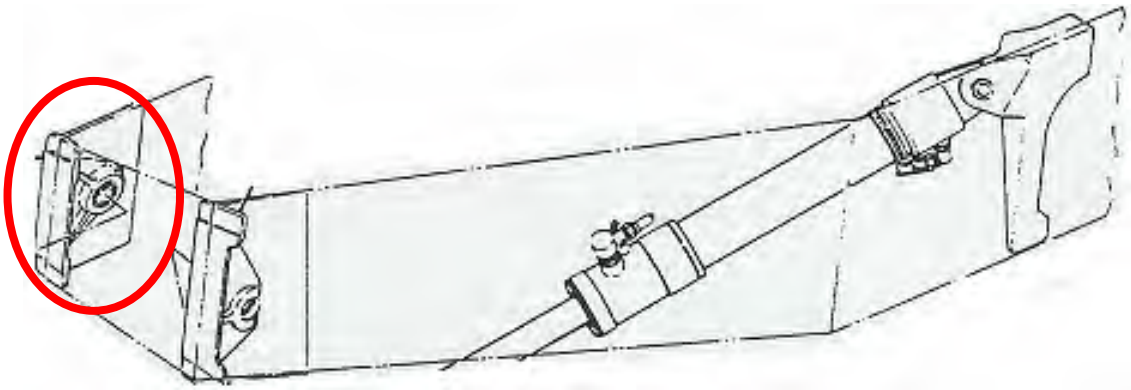

Figure 3-119. Location of Right Wing Aft Auxiliary Spar Landing Gear Attachment

Figure 3-120. Area of Corrosion on the Right Wing Aft Auxiliary Spar Landing Gear Attach Fitting

The location of the right wing forward auxiliary spar landing gear attach fitting (P/N 5122720-2) is shown in figure 3-121. Figure 3-122 shows an area of corrosion on the fitting with a maximum depth of 0.002 inch, which was classified as light. The largest amount of thickness loss was 2.0%.

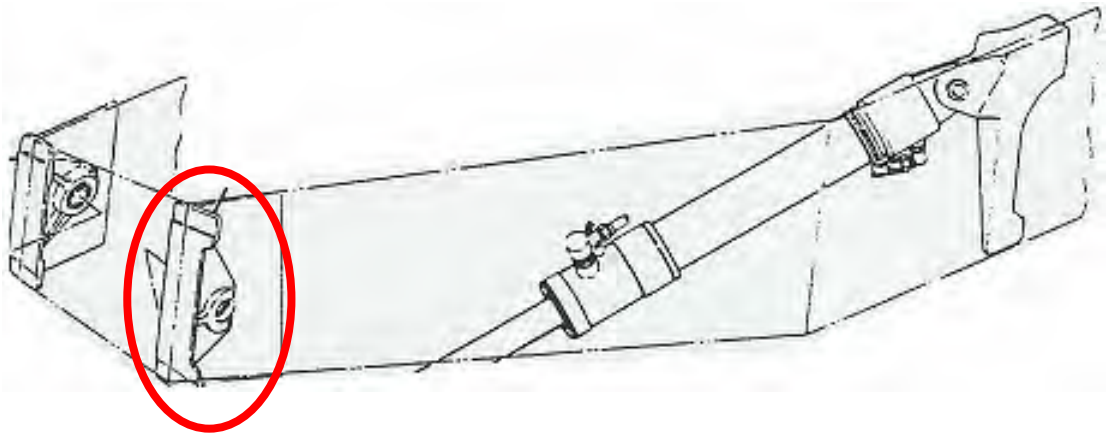

Figure 3-121. Location of Right Wing Forward Auxiliary Spar Landing Gear Attach Fitting

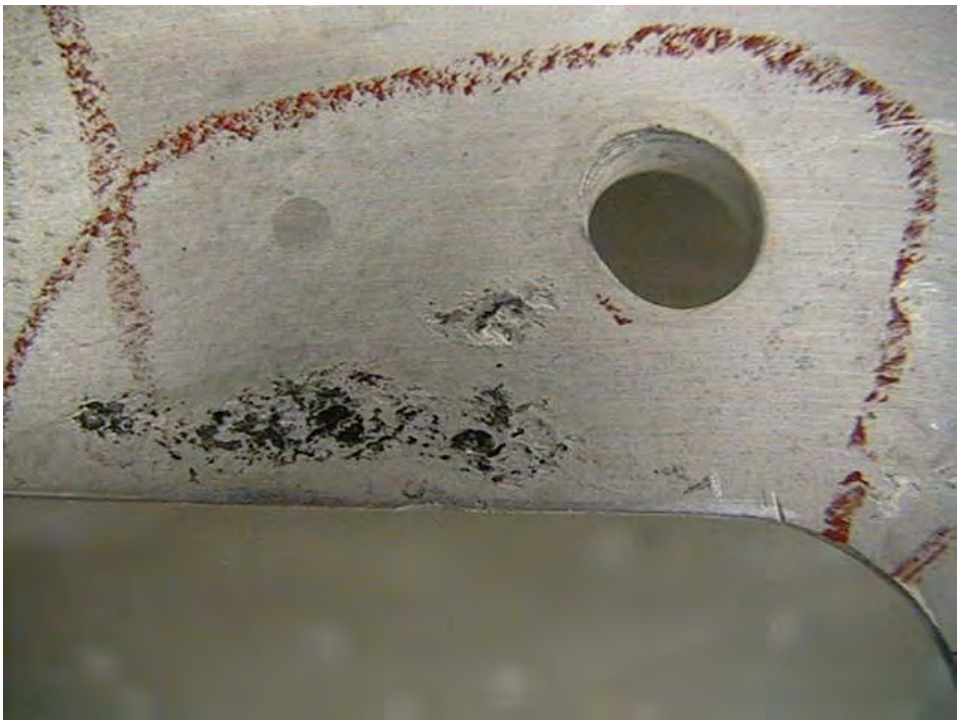

Figure 3-122. Area of Corrosion on the Right Wing Forward Auxiliary Spar Landing Gear Attach Fitting

Figure 3-123 shows the location of the right wing landing gear actuator attach fitting (P/N 5122725-4), while figure 3-124 shows an area of corrosion found on this fitting. The maximum depth of the corrosion was 0.003 inch, which was classified as light, with 1.9% maximum thickness loss.

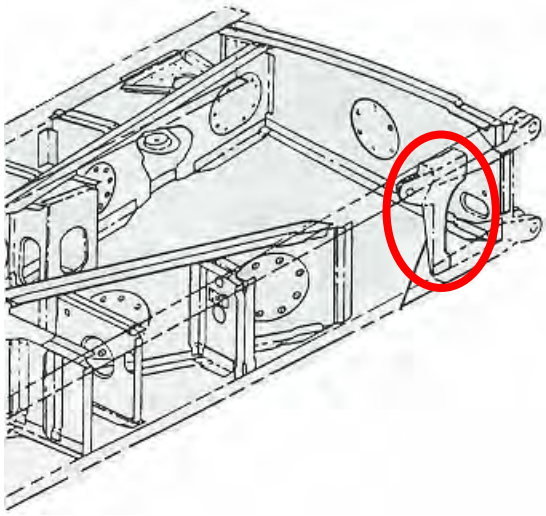

Figure 3-123. Location of Right Wing Landing Gear Actuator Attach Fitting

Figure 3-124. Area of Corrosion on the Right Wing Landing Gear Actuator Attach Fitting

3.5.3.3 Microscopic Examination of Fuselage Channels.

Both the left and right fuselage channels were examined. Figure 3-125 shows the location of the fuselage channels. Moderate-severe corrosion was found on the right fuselage channel, and figure 3-126 shows one of the more significant locations of corrosion on this channel. The maximum depth of the corrosion was 0.004 inch, which was classified as moderate-severe, and the largest amount of thickness loss was 10.0%. No defects were found on the left fuselage channel.

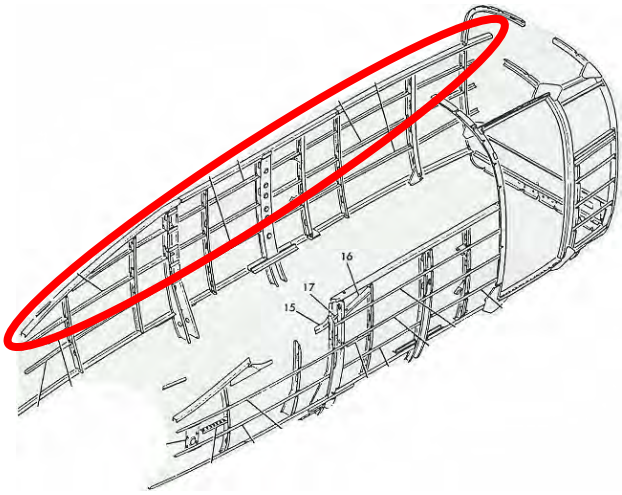

Figure 3-125. Location of Fuselage Channels

Figure 3-126. Area of Corrosion on the Right Fuselage Channel

3.5.3.4 Microscopic Examination of Horizontal Stabilizer.

Both the front and rear spars on the horizontal stabilizer were examined, as well as the elevator attach fitting. One crack was found on a bracket supporting the elevator attach fitting, and no cracks were found on the stabilizer. Light to moderate corrosion was found scattered on the spars.

3.5.3.4.1 Horizontal Stabilizer Front Spar.

Figure 3-127 shows the front spar of the horizontal stabilizer. Corrosion found on the upper cap of the front spar is shown in figure 3-128. The maximum depth of the corrosion was 0.002 inch, which was classified as light-moderate, and the largest amount of thickness loss was 3.3%. Figure 3-129 shows corrosion on the lower cap of the front spar with a maximum depth of 0.005 inch. This corrosion was classified as moderate-severe and had a maximum thickness loss of 10.0%.

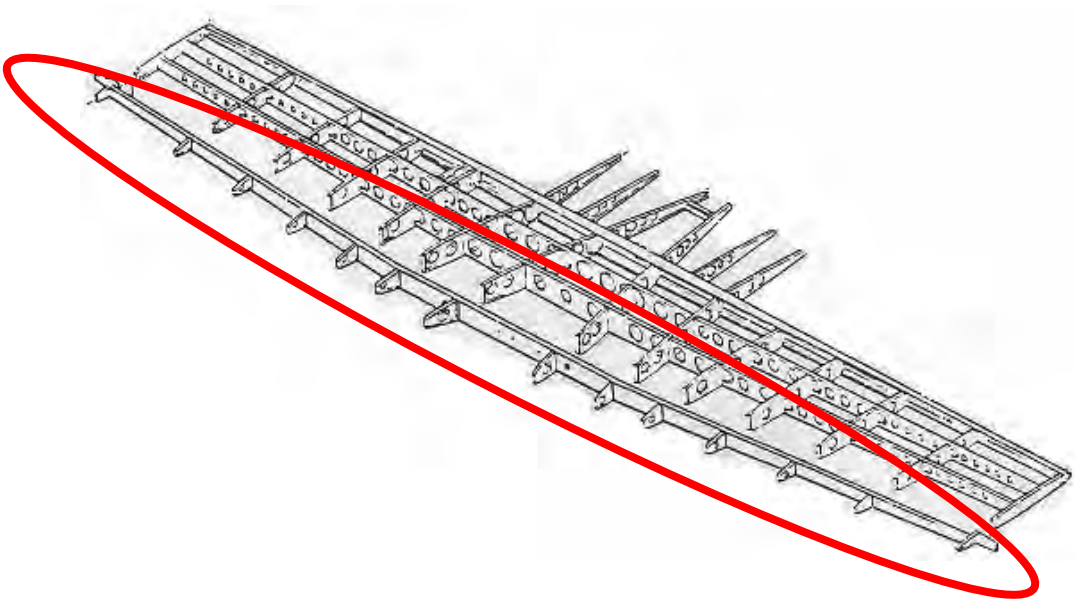

Figure 3-127. Location of Horizontal Stabilizer Front Spar

Figure 3-128. Area of Corrosion on the Horizontal Stabilizer Front Spar Upper Cap

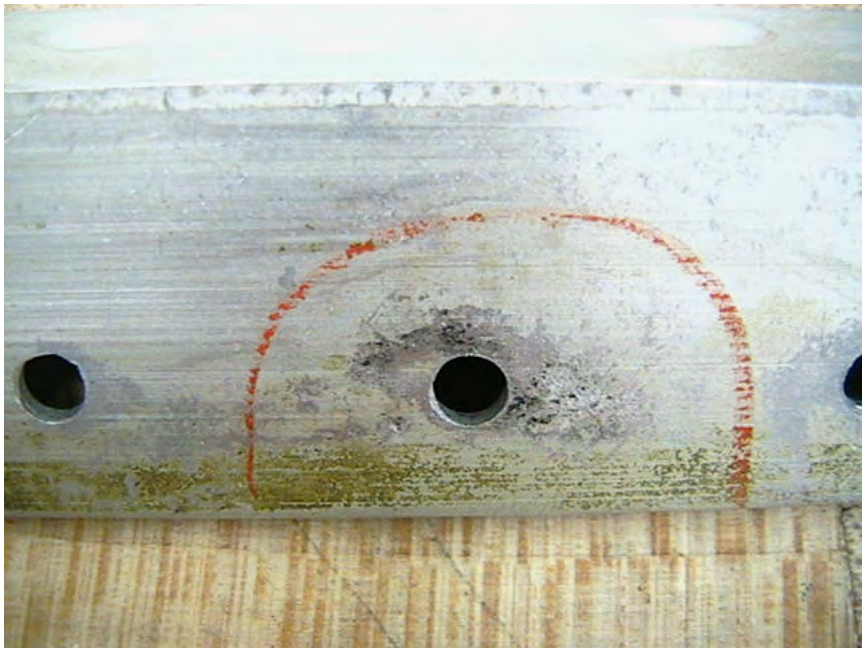

Figure 3-129. Area of Corrosion on the Horizontal Stabilizer Front Spar Lower Cap

3.5.3.4.2 Horizontal Stabilizer Rear Spar.

Figure 3-130 shows the location of the horizontal stabilizer rear spar. Figure 3-131 shows corrosion on the upper cap of the rear spar with a maximum depth of 0.003 inch, which was classified as light-moderate. The largest amount of thickness loss was 3.5%. Figures 3-132 and 3-133 show corrosion on the web of the rear spar with a maximum depth of 0.003 inch. This corrosion was considered moderate-severe and resulted in a maximum thickness loss of 10.0%. Figure 3-134 shows corrosion on the lower cap of the rear spar. The maximum depth of the corrosion was 0.019 inch, which was classified as severe. The largest amount of thickness loss observed on the lower cap was 22.0%.

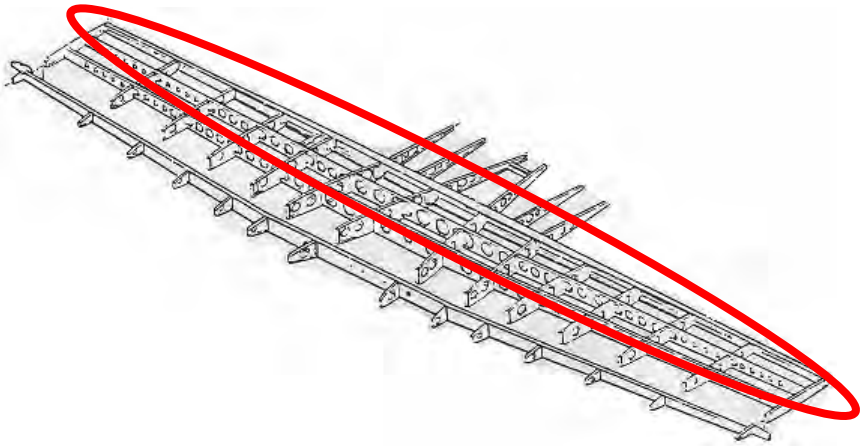

Figure 3-130. Location of Horizontal Stabilizer Rear Spar

Figure 3-131. Area of Corrosion on the Horizontal Stabilizer Rear Spar Upper Cap

Figure 3-132. Area of Wear and Corrosion on the Horizontal Stabilizer Rear Spar Web

Figure 3-133. Area of Corrosion on the Horizontal Stabilizer Rear Spar Web

Figure 3-134. Area of Corrosion on the Horizontal Stabilizer Rear Spar Lower Cap

3.5.3.5 Microscopic Examination of Vertical Stabilizer.

Both the front and rear spars on the vertical stabilizer were examined, as well as the stabilizer mount. No cracks were found, but areas of moderate to severe corrosion were found scattered on the spars.

3.5.3.5.1 Vertical Stabilizer Front Spar.

Figure 3-135 shows the location of the vertical stabilizer front spar. Corrosion on the left cap of the front spar is shown in figure 3-136. The maximum depth of this corrosion was 0.010 inch, which was classified as moderate-severe. The largest amount of thickness loss was 7.1%. Figure 3-137 shows corrosion on the right cap of the front spar with a maximum depth of 0.010 inch, which was classified as moderate-severe, and the largest amount of thickness loss was 7.1%.

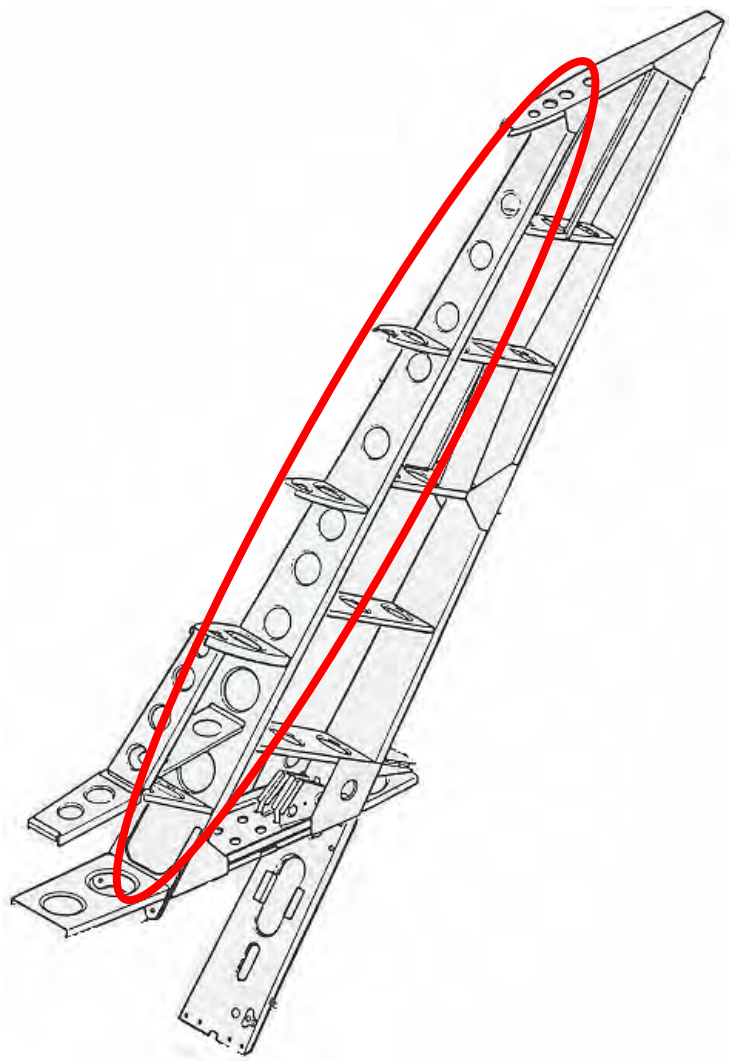

Figure 3-135. Location of Vertical Stabilizer Front Spar

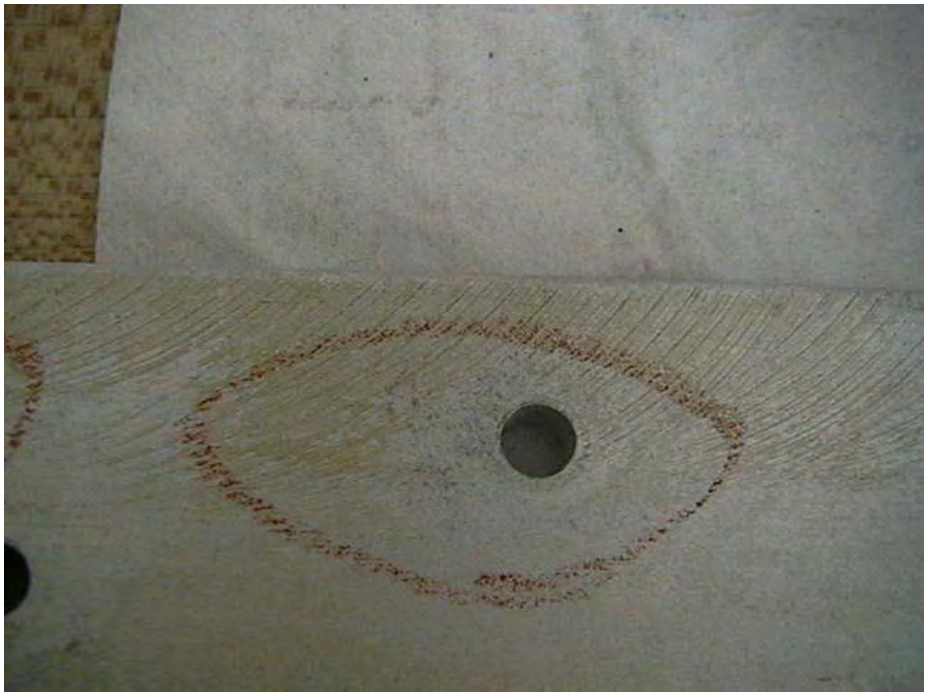

Figure 3-136. Area of Corrosion on the Vertical Stabilizer Front Spar Left Cap

Figure 3-137. Area of Corrosion on the Vertical Stabilizer Front Spar Right Cap

3.5.3.5.2 Vertical Stabilizer Rear Spar.

The location of the vertical stabilizer rear spar is shown in figure 3-138. Figure 3-139 shows corrosion on the right cap of the rear spar. The maximum depth of this corrosion was 0.003 inch, which was classified as light-moderate. The largest amount of thickness loss on the right cap was 5.0%. Corrosion on the left cap of the rear spar, shown in figure 3-140, resulted in a maximum thickness loss of 3.6%. The maximum depth of the corrosion was 0.005 inch, which was classified as light-moderate.

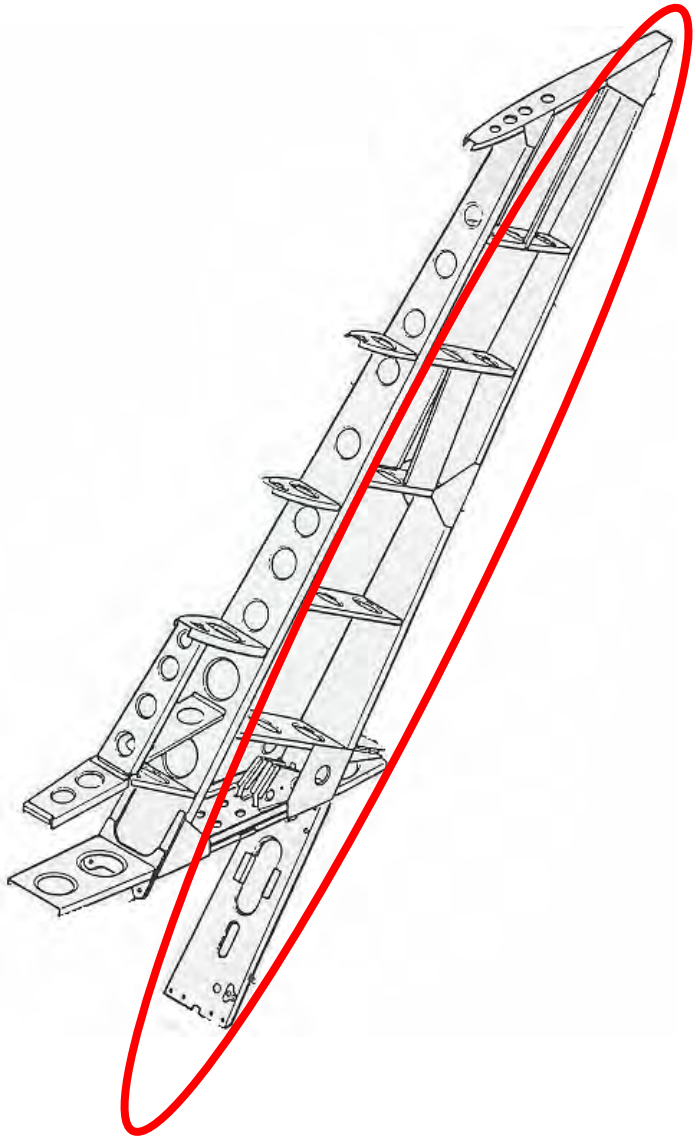

Figure 3-138. Location of Vertical Stabilizer Rear Spar

Figure 3-139. Area of Corrosion on the Vertical Stabilizer Rear Spar Right Cap

Figure 3-140. Area of Corrosion on the Vertical Stabilizer Rear Spar Left Cap

3.5.4 Microscopic Examinations of Defects Found During Disassembly.

After completing the alternative NDI, detailed disassembly of the major airplane sections occurred. During this disassembly, a number of cracks and areas of corrosion were found that went undiscovered during the inspections. Two cracks were found on the left stub wing outboard rib, multiple cracks were found on the carry-through webs, areas of corrosion were found on the carry-through beams, and a total of 25 additional cracks were found on the engine beam structure.

3.5.4.1 Left Stub Wing Outboard Rib.

Figure 3-141 shows the location of the left stub wing outboard rib. Figure 3-142 shows two cracks located at BL 42 on the rib. Crack A was 0.96 inch long, and crack B was 0.57 inch long. Both cracks were through the thickness of the rib, and they were determined to be caused by fatigue due to a cable pulley attachment.

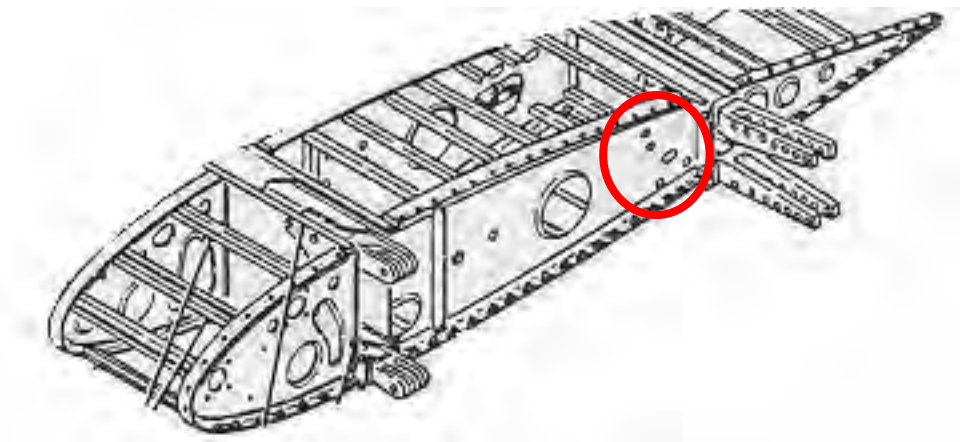

Figure 3-141. Location of Left Stub Wing Rib

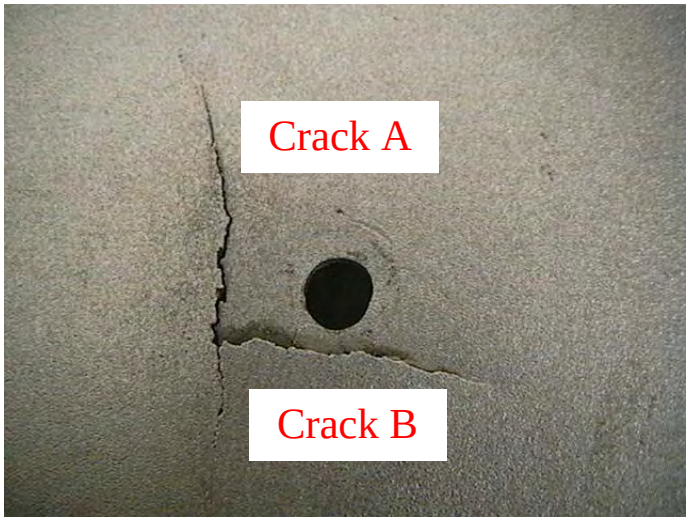

Figure 3-142. Cracks on the Left Stub Wing Rib

3.5.4.2 Carry-Through Webs.

The carry-through webs were examined and were found to have 41 total cracks. The majority of these cracks did not propagate from fastener holes, but from the areas designed to allow clearance for the stringers. The cause of the cracks was determined to be fatigue. Figure 3-143 shows the location of the forward and aft webs on the aft carry-through, and figure 3-144 shows a typical crack found on the aft web. Six cracks were found on the aft web of the aft carry-through, ranging from 0.077 to 0.62 inch. Figure 3-145 shows a typical crack on the forward web of the aft carry-through. Nine cracks were found on the forward web of the aft carry-through, ranging from 0.19 to 2.15 inches. This web also had several areas of corrosion. A typical area of corrosion, which is shown in figure 3-146, had a maximum corrosion depth of 0.006 inch, which was classified as severe. The largest amount of thickness loss on the forward web was 15.0%.

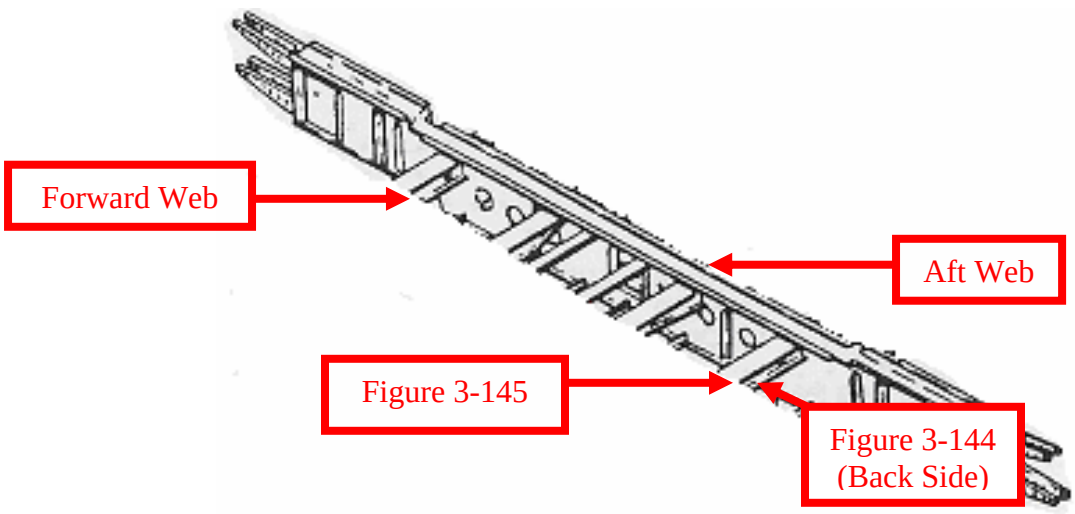

Figure 3-143. Location of Aft Carry-Through Structure Aft and Forward Webs

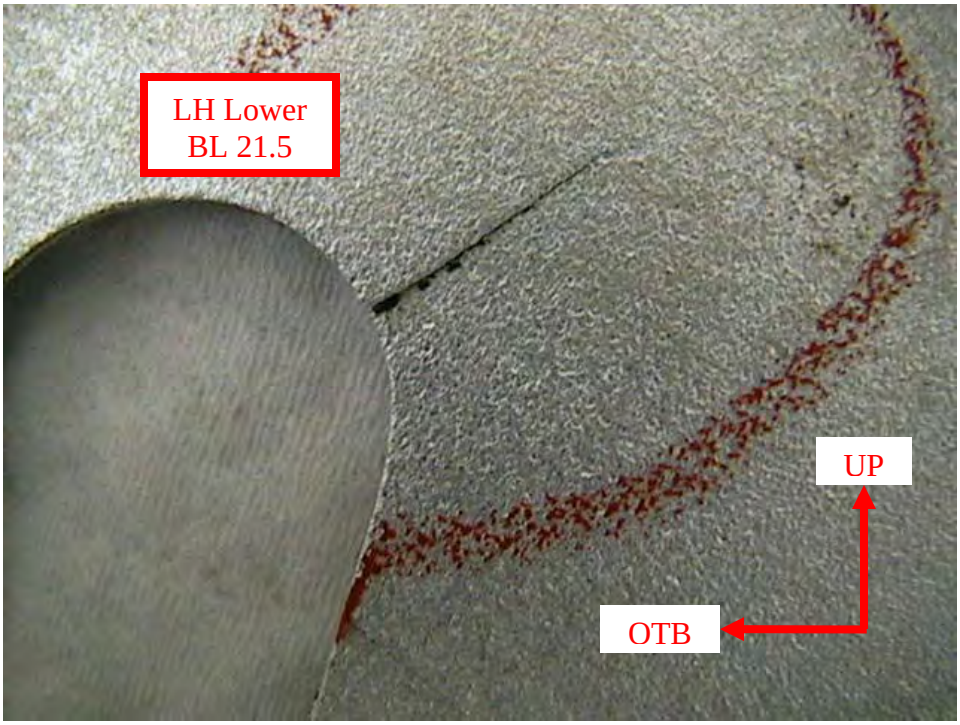

Figure 3-144. Crack in the Aft Carry-Through

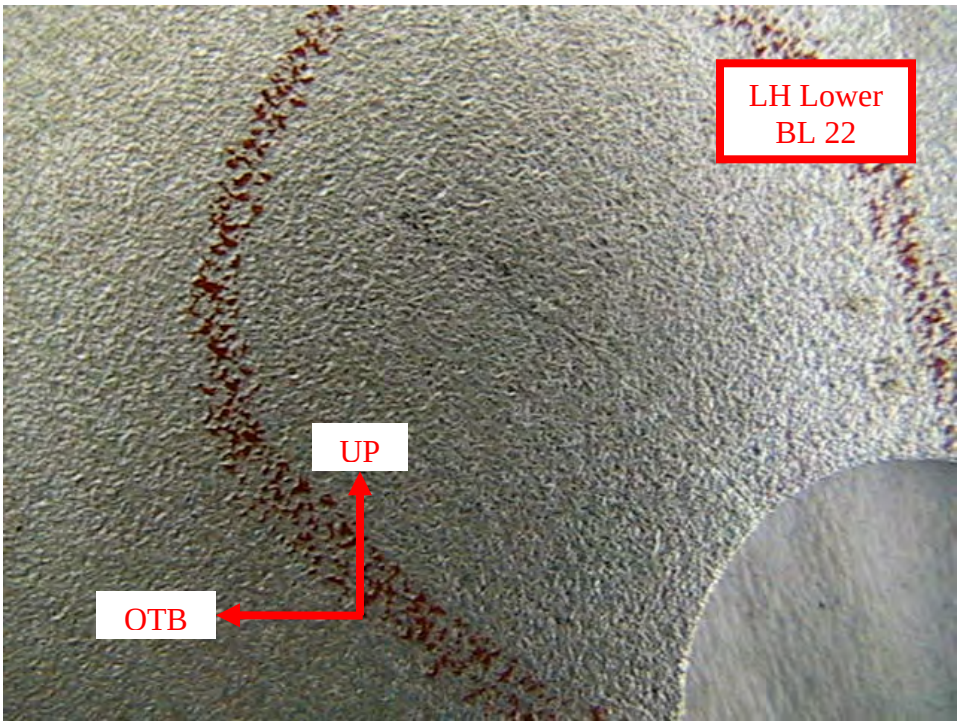

Figure 3-145. Crack in the Aft Carry-Through Forward Web

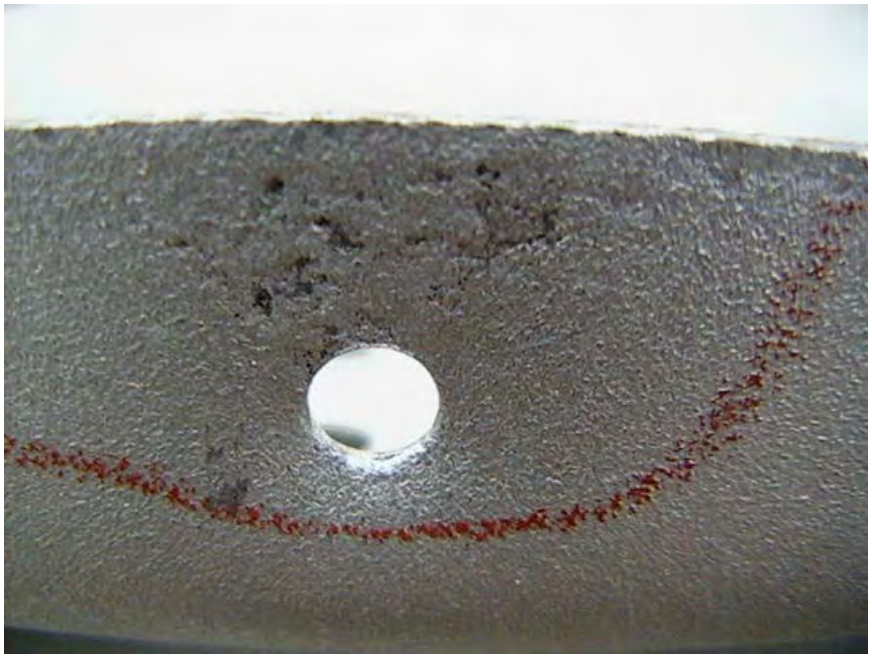

Figure 3-146. Area of Corrosion in the Aft Carry-Through Forward Web

The location of the aft and forward webs of the forward carry-through are shown in figure 3-147, while figure 3-148 shows a typical crack on the aft web (P/N 5211172-2). Nine cracks on the aft web of the forward carry-through ranging from 0.15 to 2.1 inches were found. Figure 3-149 shows a typical crack on the forward web of the forward carry-through (P/N 5211172-5). A total of 17 cracks were found on the forward web of the forward carry-through (P/N 5211172-6) ranging from 0.13 to 2.98 inches. All cracks were determined to be caused by fatigue.

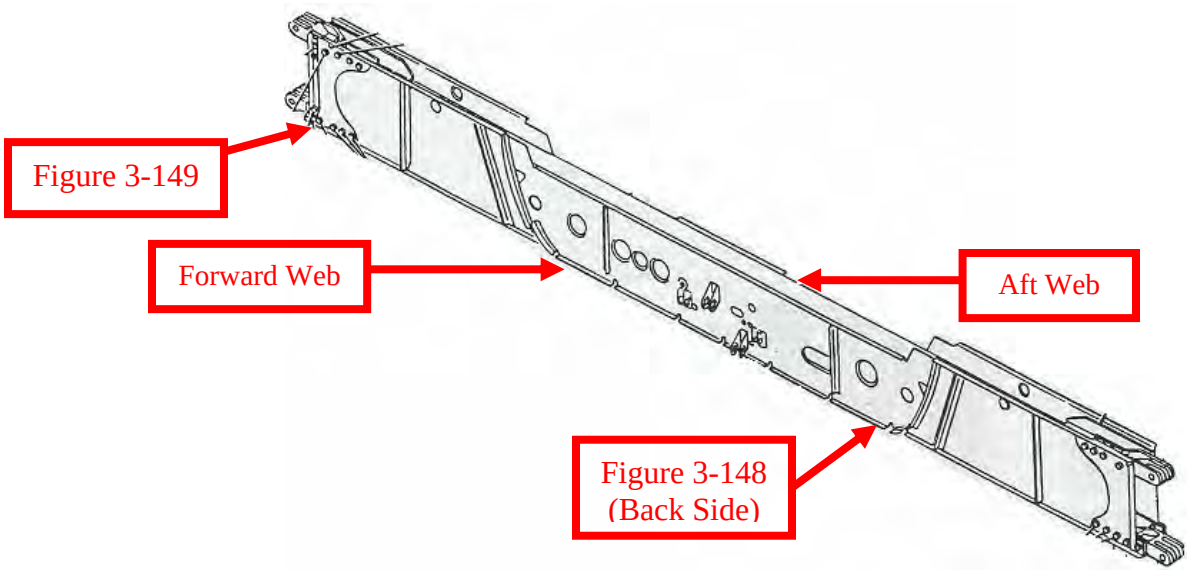

Figure 3-147. Location of Forward Carry-Through Structure Aft and Forward Webs

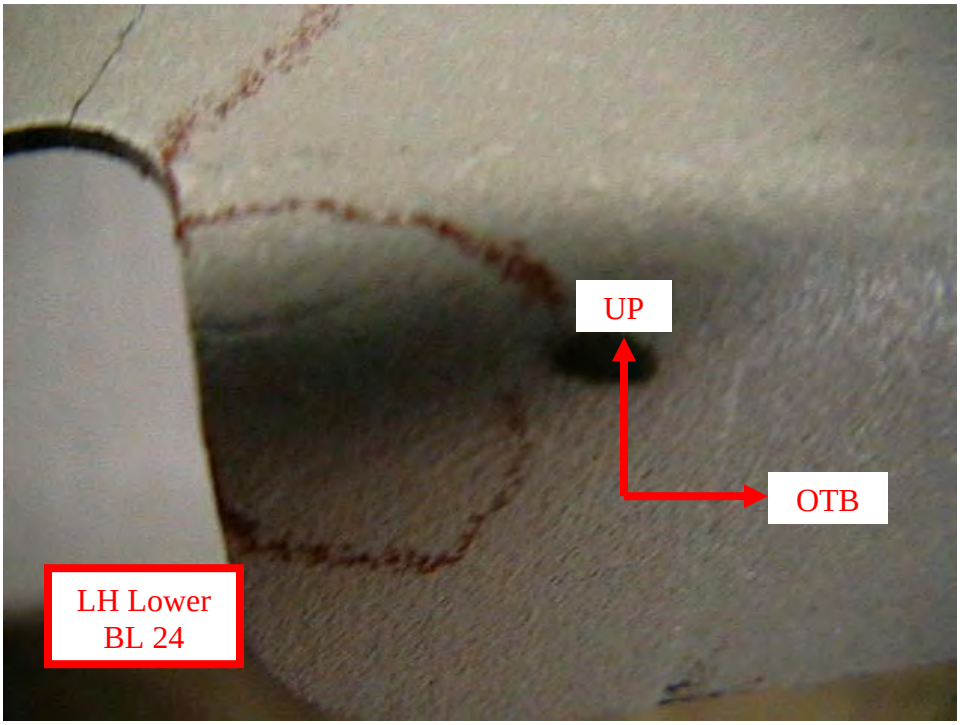

Figure 3-148. Cracks in the Forward Carry-Through Aft Web

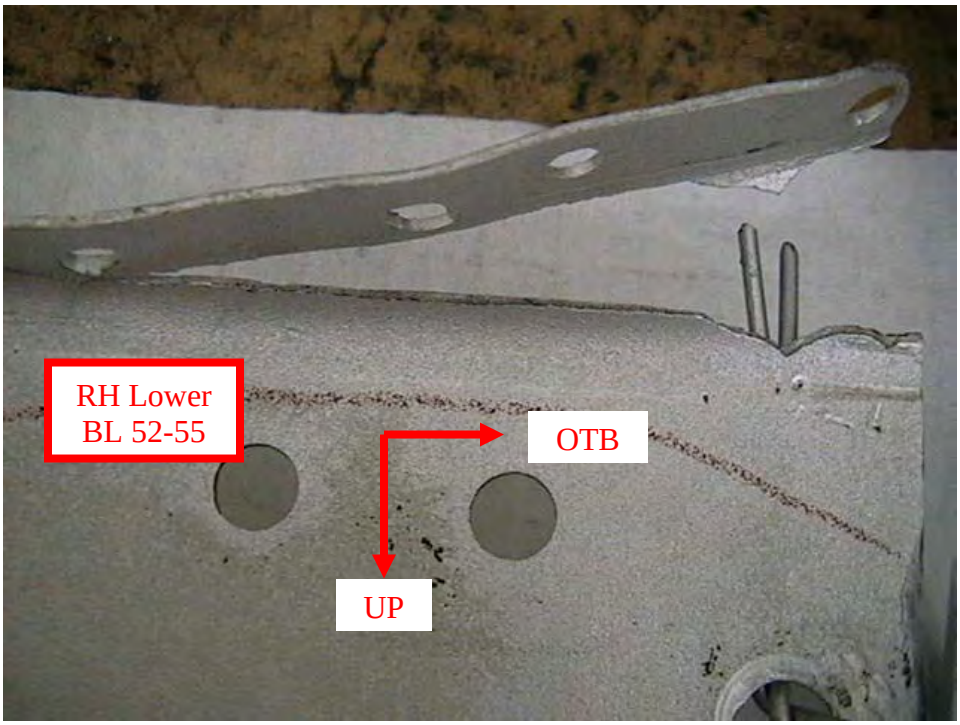

Figure 3-149. Crack in the Forward Carry-Through Forward Web

3.5.4.3 Carry-Through Beams.

Figure 3-150 shows the location of the forward carry-through beam, and figures 3-151 and 3-152 show some areas of corrosion found on this beam. The maximum pit depth of the corrosion was 0.004 inch on the lower beam (P/N 5211172-2) and was classified as light with 1.7% thickness loss. The light corrosion on the upper beam (P/N 5211172-2) had a maximum pit depth of 0.003 inch with 1.3% thickness loss.

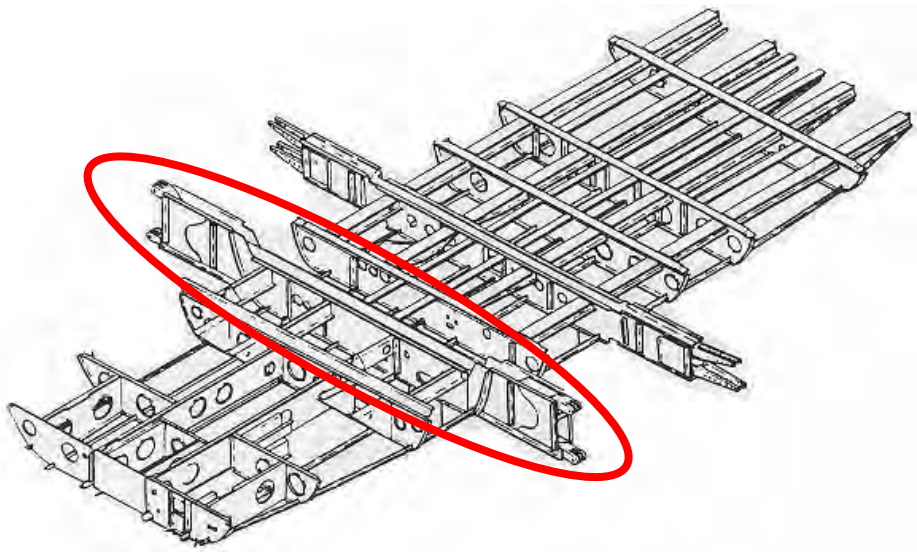

Figure 3-150. Location of Forward Carry-Through Beams

Figure 3-151. Area of Corrosion on the Lower Forward Carry-Through Beam

Figure 3-152. Area of Corrosion on the Upper Forward Carry-Through Beam

Figure 3-153 shows the location of the aft carry-through beam, and figures 3-154 and 3-155 show some areas of corrosion on the aft carry-through beams. The maximum depth of the corrosion on the upper aft beam (P/N 5211173-2) was 0.007 inch, which was classified as light-moderate. The largest amount of thickness loss was 4.7% on this beam. The maximum depth of the corrosion on the lower aft beam (P/N 5211173-2) was 0.002 inch, which was classified as light-moderate. The largest amount of thickness loss was 3.3% on this beam.

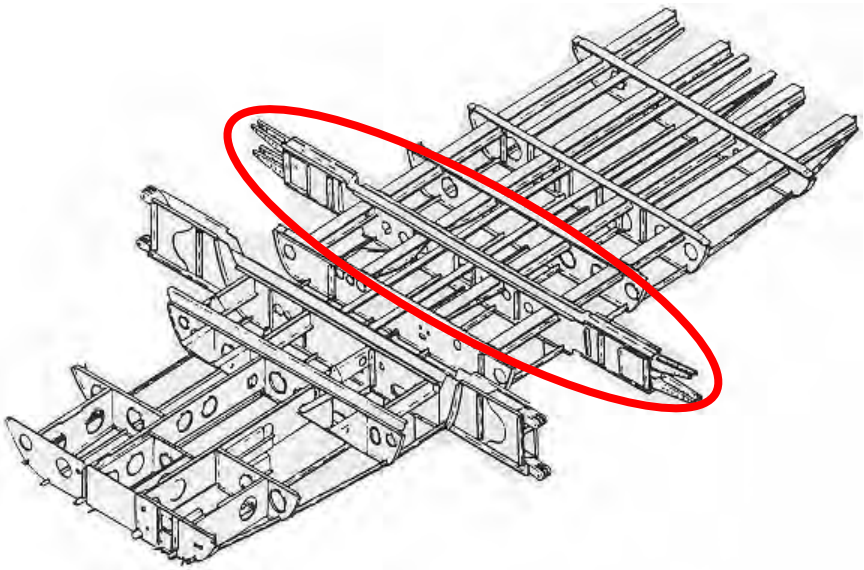

Figure 3-153. Location of Aft Carry-Through Beam

Figure 3-154. Area of Corrosion on the Upper Aft Carry-Through Beam

Figure 3-155. Area of Corrosion on the Lower Aft Carry-Through Beam

3.5.4.4 Engine Beams.

A total of 25 cracks, which varied in size and location, were found on a variety of parts on the engine beam assemblies. These cracks are detailed below. Only one of these cracks was found during the inspection phase.

3.5.4.4.1 Left Wing.

Multiple cracks were found in the left wing engine beam, ranging from 0.11 to 2.095 inches. Four cracks were found in the inboard beam (P/N 5654109-2), and three cracks were found in the outboard beam (P/N 5654109-1). The rest of the cracks were found in adjoining parts of the engine beam. Figure 3-156 shows the location of the left wing engine beams and the adjoining parts. Parts with cracks are circled. Figures 3-157 through 3-161 show four cracks (A through D) found in the left wing inboard engine beam and the fractographs for two of the cracks. It should be noted that crack A, shown in figure 3-157, had been stop drilled twice, and the crack had continued to grow. Crack B grew out of one of the stop drill holes. Both cracks were caused by fatigue. Figures 3-162 and 3-163 show two cracks found in the left wing outboard engine beam.

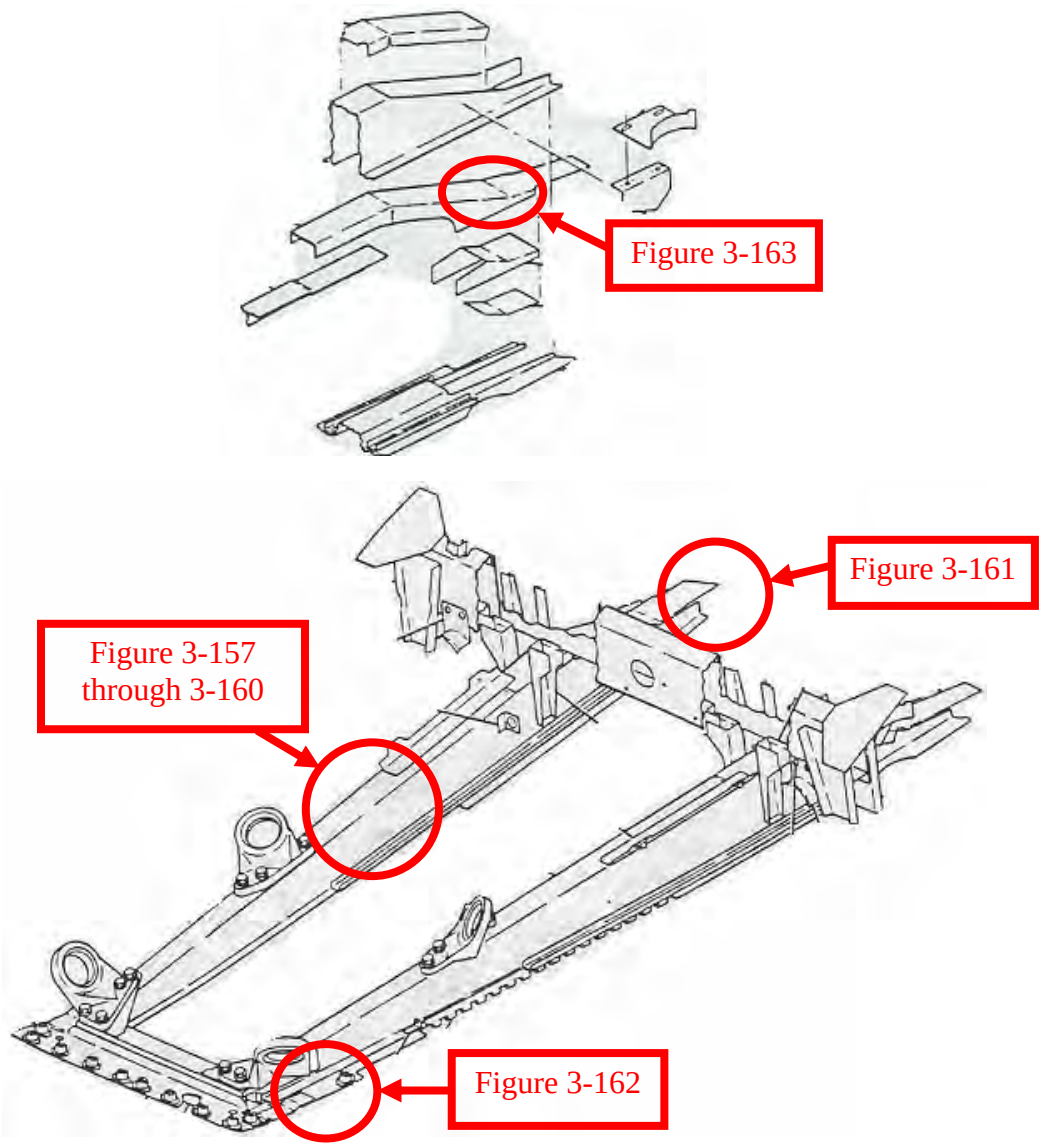

Figure 3-156. Location of Cracks in the Left Wing Engine Beams and Adjoining Parts

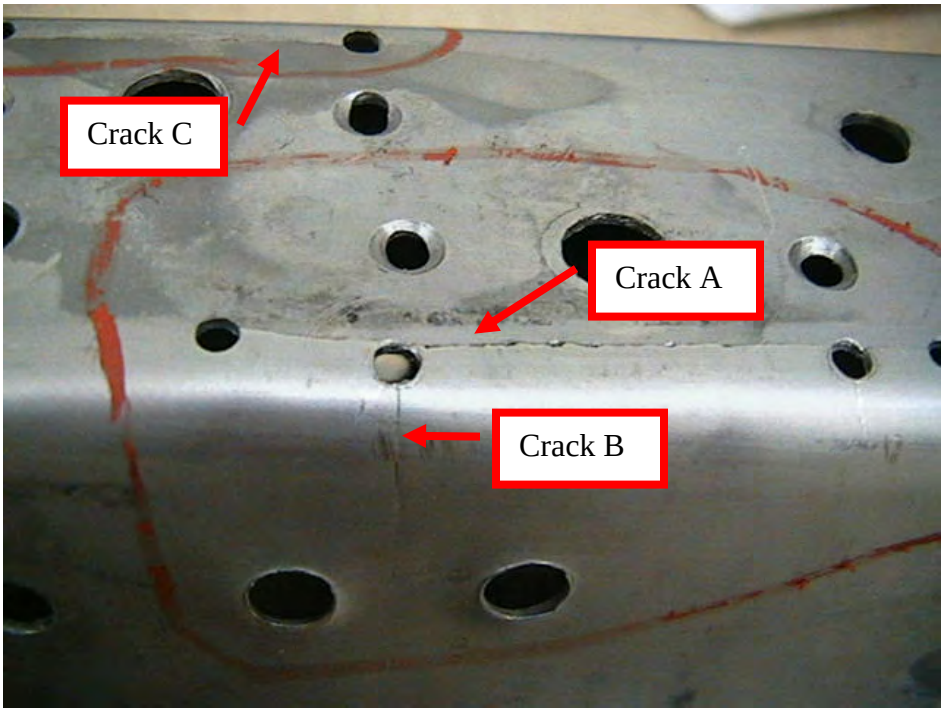

Figure 3-157. Cracks A, B, and C in the Left Wing Inboard Engine Beam

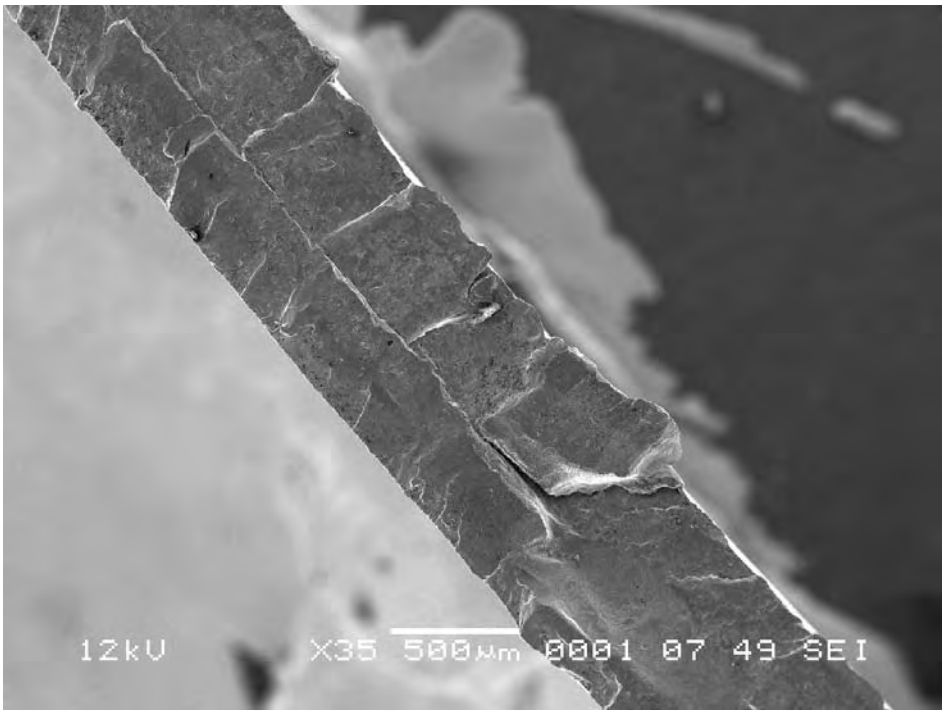

Figure 3-158. Fractograph of Crack A in the Left Wing Inboard Engine Beam

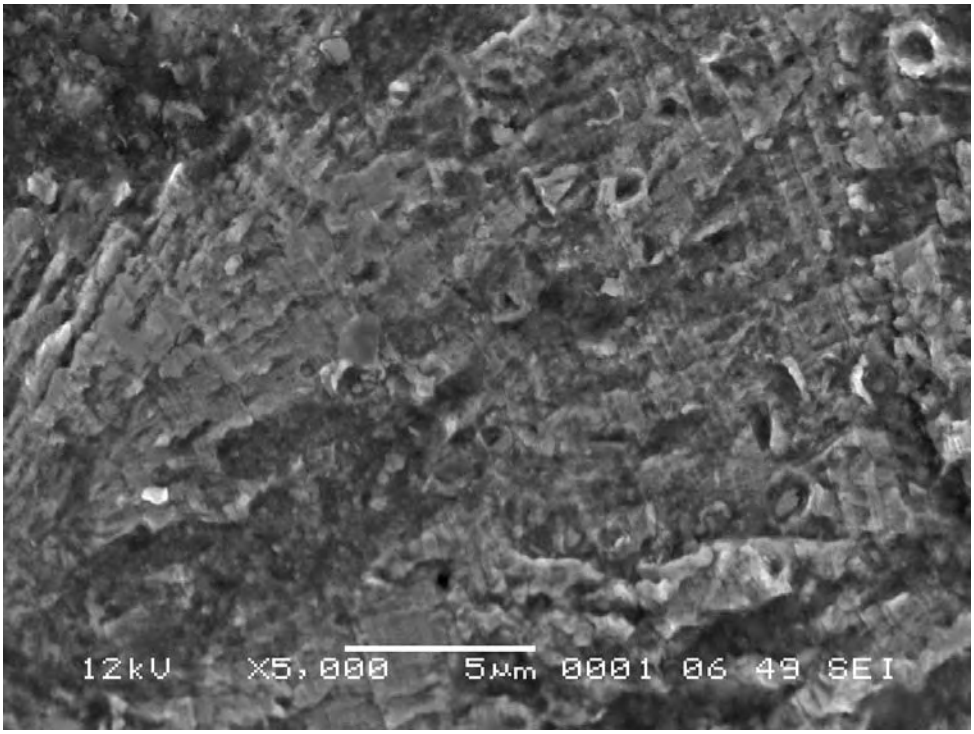

Figure 3-159. Fractograph of Crack B in the Left Wing Inboard Engine Beam

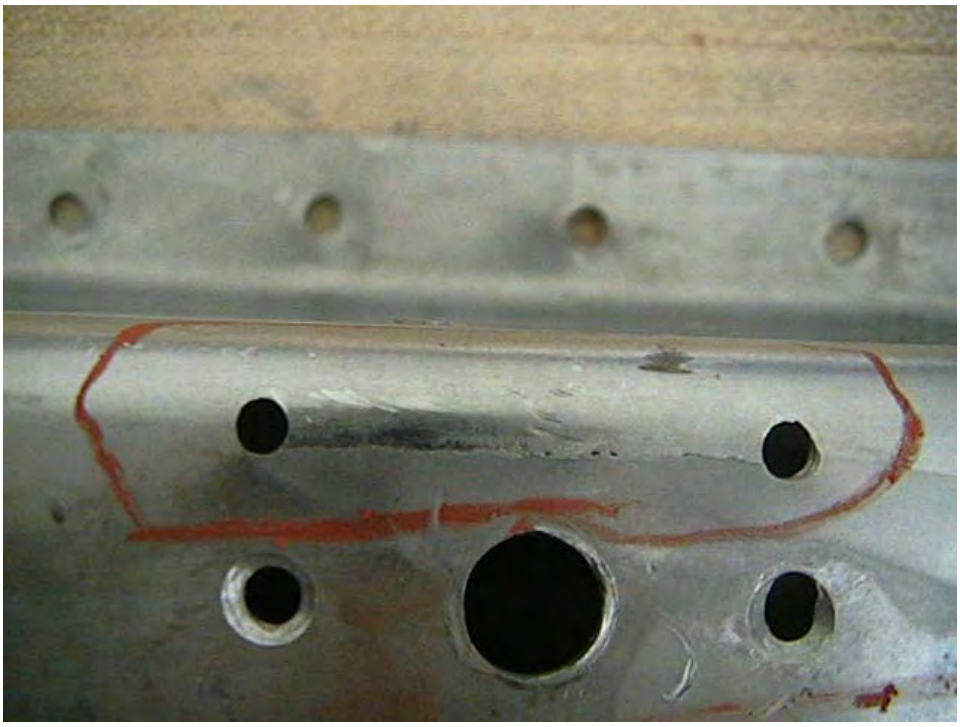

Figure 3-160. Crack C in the Left Wing Inboard Engine Beam

Figure 3-161. Crack D in the Left Wing Inboard Engine Beam

Figure 3-162. Crack in the Forward End of the Left Wing Outboard Engine Beam

Figure 3-163. Crack in the Aft End of the Left Wing Outboard Engine Beam

3.5.4.4.2 Right Wing.

Multiple cracks were found in the right wing engine beam, ranging from 0.38 to 3.5 inches. Three cracks were found in the inboard beam (P/N 5654109-3), and one crack was found in the outboard beam (P/N 5654109-4). The rest of the cracks were found in adjoining parts of the engine beam. Figure 3-164 shows the location of the engine beams and the adjoining parts. Parts with cracks are circled. Figures 3-165 through 3-167 show cracks found in the right wing inboard beam, and figure 3-168 shows a fractograph of the crack in figure 3-167. Figures 3-169 and 3-170 show cracks found in the right wing outboard engine beam, and figure 3-171 shows the face of the crack shown in figure 3-170. Figure 3-172 shows a crack in an outboard bracket (P/N 5654109-3), and figure 3-173 shows a crack in another outboard bracket (P/N 5650204-14).

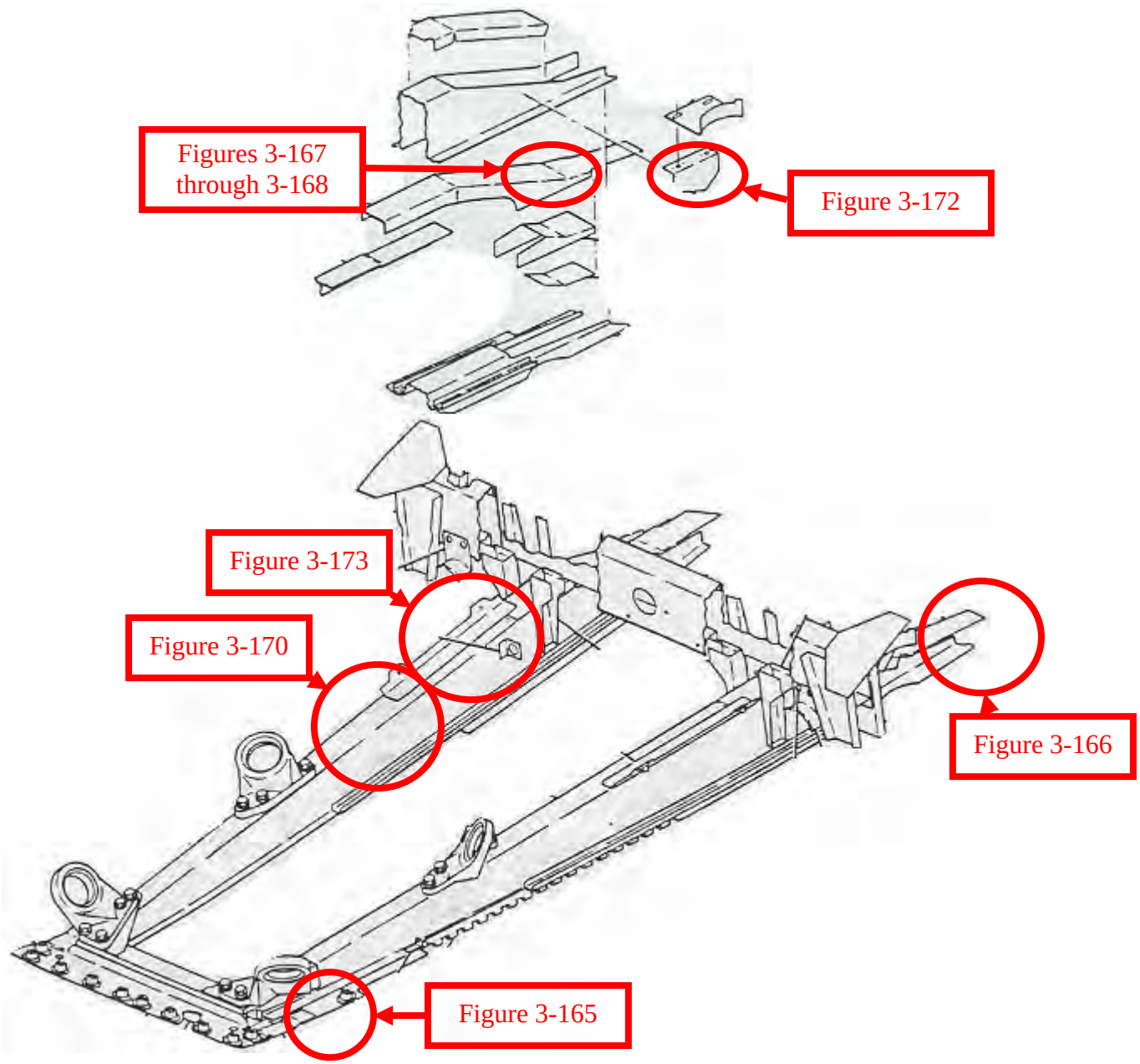

Figure 3-164. Location of Cracks in the Right Wing Engine Beams

Figure 3-165. Cracks in the Forward End of the Right Wing Inboard Engine Beam

Figure 3-166. Crack in the Aft End of the Right Wing Inboard Engine Beam

Figure 3-167. Crack Across the Right Wing Inboard Engine Beam

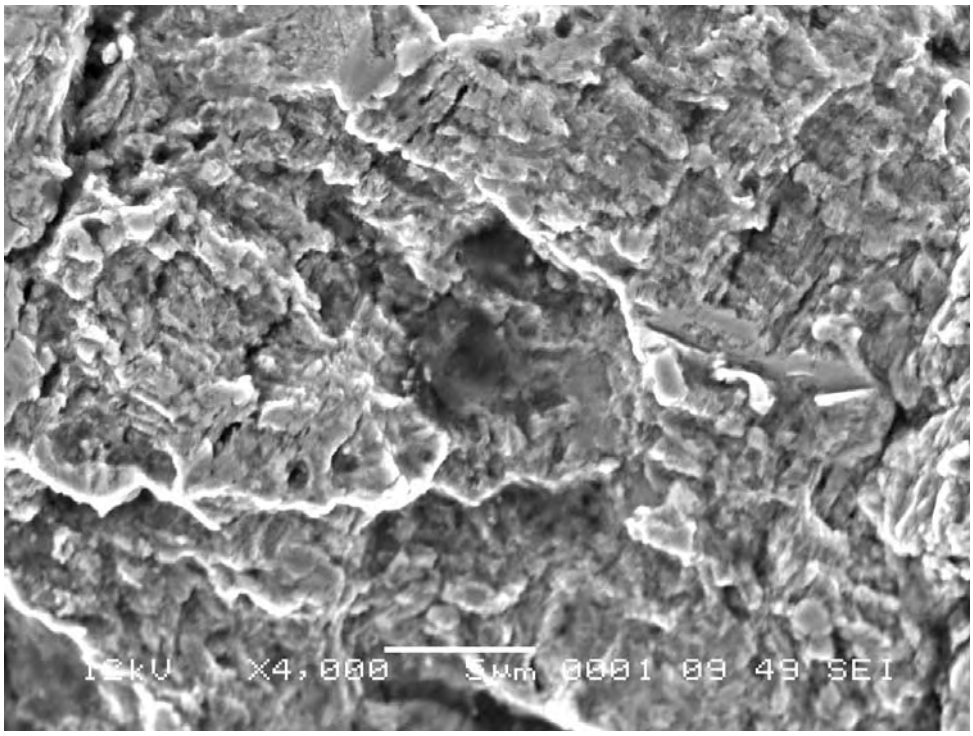

Figure 3-168. Fractograph of Crack Across the Right Wing Inboard Engine Beam

Figure 3-169. Crack in the Aft End of the Right Wing Outboard Engine Beam

Figure 3-170. Crack Mid-Length Along the Right Wing Outboard Engine Beam

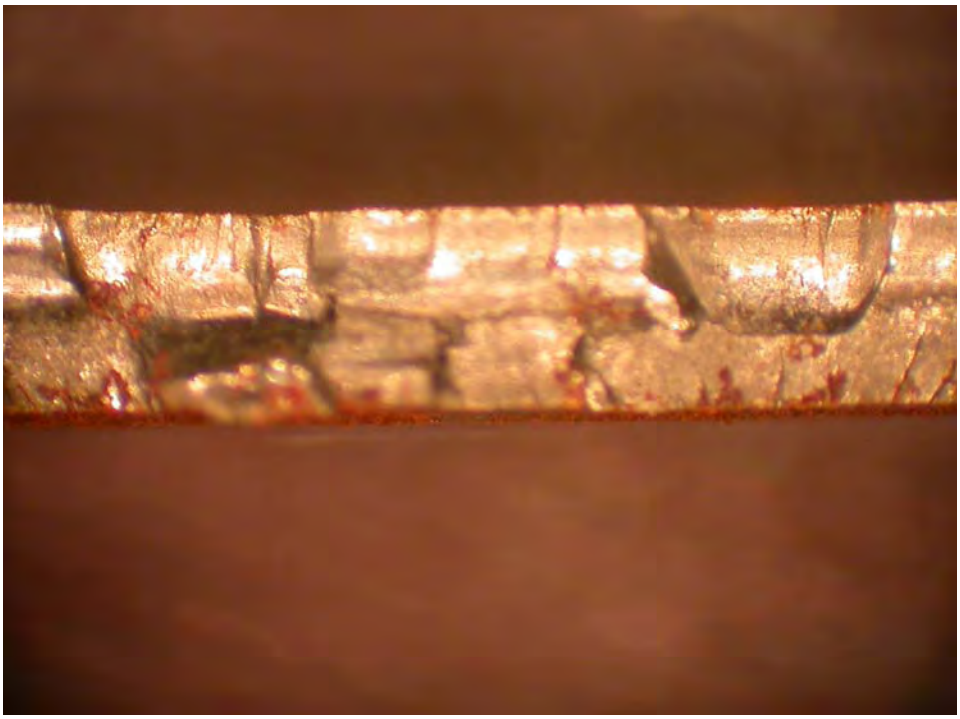

Figure 3-171. Fracture Face of Crack Mid-Length Along the Right Wing Outboard Engine Beam

Figure 3-172. Crack in the Right Wing Outboard Bracket, P/N 5654109-3

Figure 3-173. Crack in the Right Wing Outboard Bracket, P/N 5650204-14

3.5.5 Microscopic Examination of Critical Structural Areas.

Table 3-12 lists the critical structural areas identified in the maintenance manual and their locations, as well as the results found microscopically at each of these areas.

Table 3-12. Critical Structural Areas and Microscopic Results

Description	Location	Microscopic
Wing forward carry-through spar lower cap	BL 48.00	No defect
Wing front spar lower cap	WS 66.70	No defect
Wing front spar lower cap at canted rib attachment	WS 80.52	RW 0.4% loss LW 1.6% loss
Wing front spar lower cap at inboard engine beam attach	WS 88.05	Wear from spar chafing
Wing front spar at lower outboard engine beam attach	WS 107.02	No defect
Wing front spar lower cap at skin splice	WS 119.74	No defect
Wing forward auxiliary spar lower cap	WS 81.20	No defect
Wing aft auxiliary spar lower cap	WS 96.64	No defect
Wing rear spar lower cap at splice	WS 110.24	No defect
Wing aft carry-through lower spar cap	BL 49.50	No defect
Wing front spar upper cap	WS 108.08	No defect

Table 3-12. Critical Structural Areas and Microscopic Results (Continued)

Description	Location	Microscopic
Engine beam at aft engine mount	FS 127.15	No defect
Fuselage left hand longeron	FS 190.33	No defect
Tail cone angle attachment to horizontal rear spar	BL 2.90	No defect
Horizontal stabilizer front spar upper cap	BL 0.0	No defect
Horizontal stabilizer front spar lower cap	BL 0.0	No defect
Horizontal stabilizer front spar attach bolt through web	BL 7.69	Wear and 2.0% thickness loss
Horizontal stabilizer rear spar lower cap at attach bolt	BL 2.90	No defect
Horizontal stabilizer rear spar upper cap	BL 0.0	No defect
Horizontal stabilizer rear spar lower cap	BL 0.0	No defect
Horizontal stabilizer rear auxiliary spar upper cap	BL 8.01	No defect
Vertical stabilizer rear spar at attachment	WL 108.38	No defect
Vertical stabilizer rear spar cap	WL 136.04	No defect
Main landing gear side brace actuator collar		Not inspected
Nose lading gear fork		Not inspected

RW = Right wing
LW = Left wing
WL = Water line

3.5.6 Summary of Microscopic Examination Findings.

All results found by microscopic examination were noted, including depth measurements on areas of corrosion and total area encompassed by the corrosion, as well as the lengths of any cracks found. Part numbers were assigned based on the illustrated parts manual provided by the Cessna Aircraft Company. All findings are listed in the following sections.

3.5.6.1 Wings.

Table 3-13 shows the findings of the microscopic examination on the wing front and rear spars, while table 3-14 shows the results for the auxiliary spars. Figure 3-174 shows the locations of cracks and areas of corrosion on the upper surface of the left wing, while figure 3-175 shows the defects found on the lower surface of the left wing. The locations of cracks and areas of corrosion on the upper surface of the right wing are shown in figure 3-176. Figure 3-177 shows the locations of the microscopic examination findings on the lower surface of the right wing.

Table 3-13. Microscopic Examination Results of the Wings

Part Number	Defect	Depth (in.)	Area/Length (in.)	Thickness of Part (in.)
Cap, upper front (5122041-1)	Multiple areas of corrosion	0.009	0.3 × 0.2, 1.3 × 0.45, 1.5 × 0.25	0.08
Cap, upper rear (5122041-3)	Multiple areas of corrosion	0.003	scattered	0.08
Cap, upper rear (5122041-3)	Multiple areas of corrosion	0.001	4.5 × 0.15	0.075
Cap, lower front (5122041-5)	Multiple areas of corrosion	0.010	3.8 × 0.5, 0.5 × 0.23 scattered	0.078
Cap, lower rear (5122041-7)	Multiple areas of corrosion	0.013 0.016	scattered 1.0 × 0.2	0.09 0.455
Cap, lower rear (5122041-7)	Multiple areas of corrosion	0.003 0.002	2.0 × 0.6 2.5 × 0.7	0.085 0.115
Cap, upper front (5122041-1)	Multiple areas of corrosion	0.0045 0.003	scattered	0.086 0.116
Spar assembly, rear LH inboard FS 186.20 (5122036-5)	Multiple areas of corrosion	0.003 0.002	7.0 × 0.7 4.0 × 0.7	0.130 0.07
Spar assembly, rear LH inboard FS 186.20 (5122036-5)	Surface corrosion	0.002 0.013	5.5 × 0.6, scattered 5.25 × 0.6, scattered	0.13 0.07
Spar assembly, rear LH inboard FS 186.20 (5122036-5)	Multiple areas of corrosion	0.002	6.0 × 0.4	0.12
Spar assembly, rear LH inboard FS 186.20 (5122036-5)	One crack	Through	1.24	0.062
Spar assembly, rear LH inboard FS 186.20 (5122036-5)	Multiple areas of corrosion	0.011 0.006	10.5 × 0.6 9.25 × 0.6	0.135 0.07
Spar assembly, rear LH outboard FS 186.20 (5122036-3)	Four areas of corrosion	0.0065	0.75 × 0.25, 0.75 × 0.25	0.025
Spar assembly, rear LH outboard FS 186.20 (5122036-3)	Four areas of corrosion	0.004	0.825 × 0.525, 0.86 × 0.324, 0.654 × 0.42	0.03
Cap, upper (5122041-21)	Multiple areas of corrosion	0.005 0.008	19.0 × 0.5 2.5 × 0.5, 6.5 × 0.5	0.095 0.075

Table 3-13. Microscopic Examination Results of the Wings (Continued)

Part Number	Defect	Depth (in.)	Area/Length (in.)	Thickness of Part (in.)
Cap, upper (5122041-21)	Multiple areas of corrosion	0.014 0.006	33.0 × 0.43 17.0 × 0.4, 14.5 × 0.4	0.08 0.07
Cap, lower (5122041-23)	Multiple areas of corrosion	0.023 0.008	16.0 × 0.75	0.095 0.06
Cap, lower (5122041-23)	Multiple areas of corrosion	0.030 0.016	14.0 × 0.25, 3.0 × 0.25, 7.5 × 0.25, 4.0 × 0.75 35.0 × 0.88	0.11 0.65
Cap, lower (5122041-23)	Multiple areas of corrosion	0.018 0.023	33.0 × 0.85 33.0 × 0.85	0.08 0.06
Cap, lower (5122041-23)	Multiple areas of corrosion	0.018 0.001	11.0 × 0.915 8.0 × 0.85, scattered	0.12 0.065
5024002-13	Multiple areas of corrosion	0.001	scattered	0.125
Cap, upper front (5122041-2)	Multiple areas of corrosion	0.001 0.001	0.1 × 0.1, 0.25 × 0.1, 0.25 × 0.1, 0.15 × 0.1, 0.14 × 0.14, 3.0 × 0.5	0.085 0.45
Cap, upper front (5122041-2)	Multiple areas of corrosion	0.002 0.001	12.0 × 0.75 6.0 × 1.0	0.08 0.165
Cap, upper rear (5122041-4)	Multiple areas of corrosion	0.004 0.0035	34.0 × 0.3 scattered	0.1 0.45
Cap, lower front (5122041-6)	Multiple areas of corrosion	0.003	2.0 × 0.25, 3.5 × 1.0, 1.0 × 1.0	0.085
Cap, lower front (5122041-6)	Multiple areas of corrosion	0.005 0.001	3.5 × 0.4, 2.0 × 0.2, 1.5 × 0.5, 0.75 × 0.25	0.085 0.125
Cap, lower rear (5122041-8)	Multiple areas of corrosion	0.0045 0.0035	4.0 × 1.25, 15.75 × 0.33, 11.25 × 1.25 7.0 × 0.5	0.1 0.45
Spar assembly, rear RH inboard FS 186.20 (5122036-6)	Multiple areas of corrosion	0.0045	2.0 × 0.75, 3.5 × 0.25	0.087
Spar assembly, rear RH inboard FS 186.20 (5122036-6)	Multiple areas of corrosion	0.009 0.007	5.5 × 1.0 5.5 × 1.0, 4 × 0.5	0.125 0.06
Spar assembly, rear RH inboard FS 186.20 (5122036-6)	Multiple areas of corrosion	0.001 0.003	3.5 × 0.5 5.0 × 0.5	0.125 0.065

Table 3-13. Microscopic Examination Results of the Wings (Continued)

Part Number	Defect	Depth (in.)	Area/Length (in.)	Thickness of Part (in.)
Spar assembly, rear RH outboard FS 186.20 (5122036-4)	Multiple areas of corrosion	0.004	scattered	0.025
Spar assembly, rear RH outboard FS 186.20 (5122036-4)	One area of corrosion	0.002	0.3 × 0.4	0.025
Cap, upper (5122041-22)	Multiple areas of corrosion	0.005 0.001	7.5 × 0.5, 4.25 × 0.25, 3.5 × 0.5 3.25 × 0.375	0.115 0.072
Cap, upper (5122041-22)	Multiple areas of corrosion	0.001	5.0 × 0.15, 3.5 × 0.15	0.07
Cap, upper (5122041-22)	Multiple areas of corrosion	0.006 0.003	3.0 × 0.6, 1.0 × 0.25, scattered 12.0 × 0.65	0.125 0.075
Cap, upper (5122041-22)	Multiple areas of corrosion	0.002 0.0035	scattered 5.0 × 0.75, scattered	0.1 0.07
Cap, lower (5122041-24)	Multiple areas of corrosion	0.001 0.002	5.5 × 0.5, 9.0 × 0.15, 8.5 × 0.2 16.0 × 0.25	0.10 0.065
Cap, lower (5122041-24)	Multiple areas of corrosion	0.001 0.010	0.5 × 0.5 9.0 × 0.8	0.09 0.065
Cap, lower (5122041-24)	Multiple areas of corrosion	0.003	8.5 × 0.75, 29.0 × 0.5, 4.0 × 0.75	0.1
Cap, lower (5122041-24)	Multiple areas of corrosion	0.003 0.006	14.0 × 0.25, 12.0 × 0.2 scattered	0.125 0.065
5024002-14	Surface corrosion	0.001	scattered	0.125
Fitting, wing attach upper front LH (0822550-24)	Multiple areas of corrosion	0.013	1.5 × 0.7, 0.1 × 0.3, 0.05 × 0.05, 0.55 × 0.2, 1.3 × 0.8	0.5
Fitting, wing attach upper rear RH (0822550-22)	Multiple Areas of corrosion	0.008	1.2 × 0.8	0.5
Fitting, wing attach lower front RH (0822550-26)	Three areas of corrosion	0.015	1.0 × 0.4, 0.35 × 0.2	0.5

Table 3-13. Microscopic Examination Results of the Wings (Continued)

Part Number	Defect	Depth (in.)	Area/Length (in.)	Thickness of Part (in.)
Fitting, wing attach lower rear RH (0822550-20)	Multiple areas of corrosion	0.010	0.6 × 0.3, 0.25 × 0.55	0.5
Spar assembly, front RH FS 154.50 (5222010-4)	Multiple areas of corrosion	0.003	0.15 × 0.15	0.045
Cap, upper (5122031-6)	Multiple areas of corrosion	0.004 0.002	11.0 × 0.5, scattered 15.0 × 0.25, 4.0 × 0.2, 2.5 × 0.5	0.25 0.1
Cap, lower (5222011-2)	Multiple areas of corrosion, and engine beam wear	0.004	1.5 × 1.0, 19.0 × 1.2, 6.0 × 0.5	0.26 0.115
Fitting assembly, RH main gear actuator (5122725-4)	Multiple areas of corrosion	0.003	scattered	0.16
Aileron assembly, RH (5124000-103)	Surface corrosion	0.001	scattered	0.375
Cap, upper (5122031-6)	Multiple areas of corrosion	0.0045 0.0035	2.0 × 0.3, 2.8 × 0.6, scattered 3.0 × 0.09, 3.5 × 0.6, scattered	0.22 0.1
Cap, upper (5122031-6)	Multiple areas of corrosion	0.003	3.5 × 0.5	0.21
Spar assembly, front RH FS 154.50 (5222010-4)	Four areas of corrosion	0.008	0.046 × 0.05, 0.055 × 0.105, 0.065 × 0.06, 0.13 × 0.40	0.040
Spar assembly, front RH FS 154.50 (5222010-4)	Two areas of corrosion	0.001	2.0 × 0.6, 2.0 × 0.6	0.06
Spar assembly, front RH FS 154.50 (5222010-4)	Multiple areas of corrosion	0.008	4.5 × 0.25, 1.5 × 0.5	0.045
Spar assembly, front RH FS 154.50 (5222010-4)	One corrosion	0.012	2.5 × 2.5	0.05
Spar assembly, front RH FS 154.50 (5222010-4)	Two areas of corrosion	0.002	2.0 × 0.6, 2.0 × 0.6	0.06
Spar assembly, front RH FS 154.50 (5222010-4)	Two areas of corrosion	0.0045	1.8 × 0.6	0.6

Table 3-13. Microscopic Examination Results of the Wings (Continued)

Part Number	Defect	Depth (in.)	Area/Length (in.)	Thickness of Part (in.)
Spar assembly, Front RH FS 154.50 (5222010-4)	Multiple areas of corrosion	0.008	1.6 × 0.8	0.045
Cap, lower (5222011-2)	Multiple areas of corrosion	0.009	0.12 × 0.07	0.045
Cap, lower (5222011-2)	Two areas of corrosion	0.004 0.002	0.75 × 0.2 0.1 × 0.1	0.15 0.095
Cap, lower (5222011-2)	Three areas of corrosion	0.001	5.0 × 0.15	0.1
Cap, upper (5122031-6)	Three areas of corrosion	0.002	1.25 × 0.4	0.1
Fitting, wing attach lower rear RH (0822550-23)	Multiple areas of corrosion	0.002	4.0 × 0.2, 2.5 × 0.2, 15.5 × 0.25	0.1
Fitting, wing attach upper rear LH (0822550-21)	Multiple areas of corrosion	0.020	0.3 × 0.7, 1.0 × 0.5, 0.6 × 0.4, 0.7 × 0.4	0.5
Fitting, wing attach lower front LH (0822550-25)	One area of corrosion	0.008	1.0 × 0.25, 0.05 × 0.05, 0.1 × 0.3, 0.1 × 0.3, 0.4 × 0.5	0.5
Fitting, wing attach lower rear LH (0822550-19)	Two areas of corrosion	0.025	1.4 × 0.7, 0.5 × 0.6, 0.1 × 0.4	0.5
Left wing front web (No P/N)	One crack	Through	0.12	0.05
Spar assembly, front LH FS 154.50 (5222010-3)	Multiple areas of corrosion	0.005	1.5 × 1.0, 1.25 × 0.75, 4.0 × 1.0	0.04
Spar assembly, front LH FS 154.50 (5222010-3)	Two areas of corrosion	0.023	0.5 × 1.0, 0.16 × 0.16, 3.7 × 0.1, 0.6 × 0.7	0.5
Cap, upper (5122031-5)	Multiple areas of corrosion	0.006 0.005	3.0 × 0.4, scattered	0.225 0.09
Fitting assembly, LH main gear actuator (5122725-3)	Multiple areas of corrosion	0.006	scattered	0.15

Table 3-13. Microscopic Examination Results of the Wings (Continued)

Part Number	Defect	Depth (in.)	Area/Length (in.)	Thickness of Part (in.)
Aileron assembly, RH (5124000-103)	Surface corrosion	0.001	scattered	0.375
Spar assembly, front LH FS 154.50 (5222010-3)	One area of corrosion	0.008	0.15 × 0.15	0.05
Spar assembly, front LH FS 154.50 (5222010-3)	Two areas of corrosion	0.001	2.0 × 0.6, 2.0 × 0.6	0.06
Spar assembly, front LH FS 154.50 (5222010-3)	Two areas of corrosion	0.001	2.0 × 0.6, 2.0 × 0.6	0.06
Cap, upper (5122031-5)	Multiple areas of corrosion	0.003	6.0 × 0.3, scattered	0.16
Cap, upper (5122031-5)	Multiple areas of corrosion	0.002	scattered	0.13
Cap, upper (5122031-5)	Multiple areas of corrosion	0.006	17.0 × 0.11	0.11
Cap, upper (5122031-5)	Multiple areas of corrosion	0.002	12.0 × 0.5, 2.0 × 0.25	0.085 0.09
Cap, upper (5122031-5)	Multiple areas of corrosion	0.004 0.003	scattered 20.0 × 0.5, 12.0 × 0.75	0.2 0.09
Cap, upper (5122031-5)	Multiple areas of corrosion	0.030 0.010	12.0 × 0.9, scattered 0.1 × 0.625, scattered	0.165 0.1
Cap, lower (5222011-1)	Multiple areas of corrosion	0.006 0.011	7.5 × 1.0, 1.5 × 1.0, 2.5 × 0.25, 5.5 × 0.125, 2.0 × 1.0, 2.0 × 1.5	0.26 0.1
Cap, lower (5222011-1)	Three areas of corrosion	0.0045 0.003	0.26 × 0.2 scattered	0.15 0.1
Cap, lower (5222011-1)	One area of corrosion	0.002	1.0 × 0.25	0.11
Cap, lower (5222011-1)	Two areas of corrosion	0.001	0.7 × 0.24	0.085

RH = Right hand
LH = Left hand

Table 3-14. Microscopic Examination Results of the Auxiliary Spars

Part Number	Defect	Depth (in.)	Area/Length (in.)	Thickness of Piece (in.)
Support, main gear forward LH Wing (5122720-1)	Multiple areas of corrosion	0.02	scattered, 5.50 × 1.75	0.1
Spar assembly, LH aft auxiliary wing (5122040-3)	Three areas of corrosions	0.005	1.0 × 0.6, 0.4 × 0.2, 0.15 × 0.15	0.065
Spar assembly, LH aft auxiliary wing (5122040-3)	Four areas of corrosion	0.005	0.555 × 0.5, 0.5 × 0.5, 0.35 × 0.28, 3.0 × 0.2	0.05
Spar assembly, LH aft auxiliary wing (5122040-3)	One crack	Through	0.2	0.065
Spar assembly, LH Aft auxiliary wing (5122040-3)	One area of corrosion	0.012	8.0 × 4.0	0.065
Spar assembly, LH aft auxiliary wing (5122040-3)	One area of corrosion, one crack	0.003 through	14.0 × 0.2, 0.565	0.065
Web assembly, RH forward auxiliary Spar (5122045-8)	Two areas of corrosion	0.002	7.50 × 0.5, 2.0 × 0.5	0.065
Web assembly, RH forward auxiliary spar (5122045-8)	Two cracks, one area of corrosion	Through 0.006	0.245, 0.07, 0.8 × 1.30	0.07
Support, main gear forward RH wing (5122720-2)	Multiple areas of corrosion	0.002	scattered	0.1
Spar assembly, RH aft auxiliary spar wing (5122040-4)	Five areas of corrosion	0.012	1.50 × 0.115, 0.2 × 0.09, 1.550 × 0.5, 0.95 × 0.35, 4.0 × 0.75	0.07
Spar assembly, RH aft auxiliary spar Wing (5122040-4)	Four areas of corrosion	0.002	1.020 × 0.175, 0.3 × 0.2, 0.9 × 0.18, 1.350 × 0.46	0.05
Spar assembly, RH aft auxiliary spar Wing (5122040-4)	One area of corrosion	0.008	9.0 × 1.0	0.065
Spar assembly, RH aft auxiliary spar wing (5122040-4)	One area of corrosion	0.003	17 × 0.3	0.065

Table 3-14. Microscopic Examination Results of the Auxiliary Spars (Continued)

Part Number	Defect	Depth (in.)	Area/Length (in.)	Thickness of Piece (in.)
Spar assembly, RH aft auxiliary spar wing (5122040-4)	Two cracks, two areas of corrosion	Through 0.003	1.0, 1.75, 2.88 × 0.25, 2.88 × 0.25	0.065
Support, main gear aft LH wing (5122724-5)	Multiple areas of corrosion	0.002	4.0 × 1.7, 3.0 × 1.8, 1.3 × 1.0, 2.5 × 1.8	0.15, 0.1

RH = Right hand
LH = Left hand

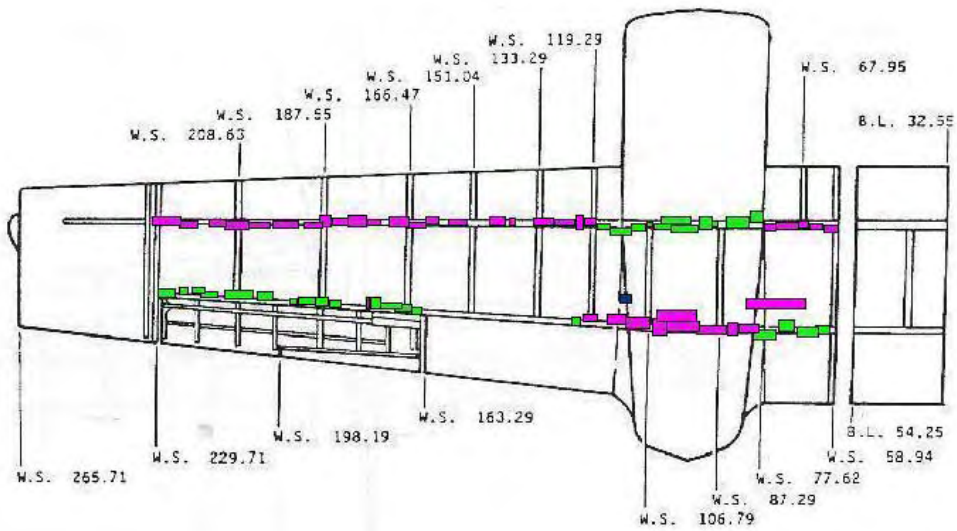

Figure 3-174. Location of Microscopic Examination Findings on the Left Wing Upper Surface

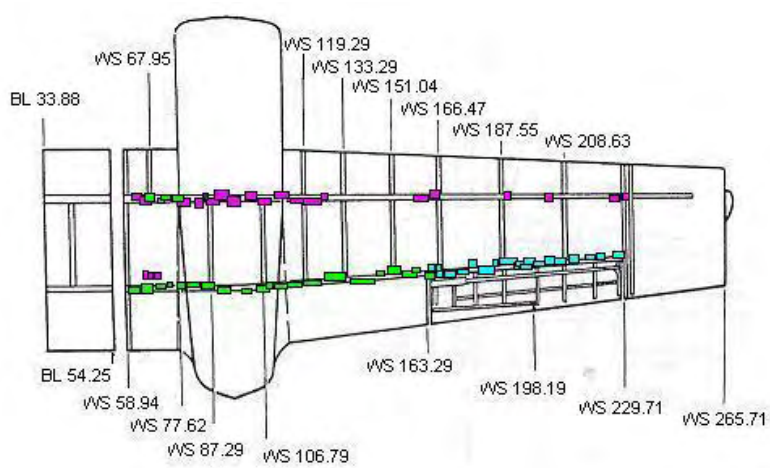

Figure 3-175. Location of Microscopic Examination Findings on the Left Wing Lower Surface

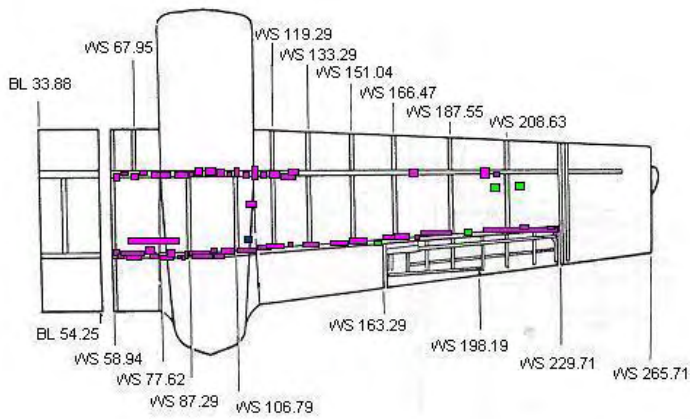

Figure 3-176. Location of Microscopic Examination Findings on the Right Wing Upper Surface

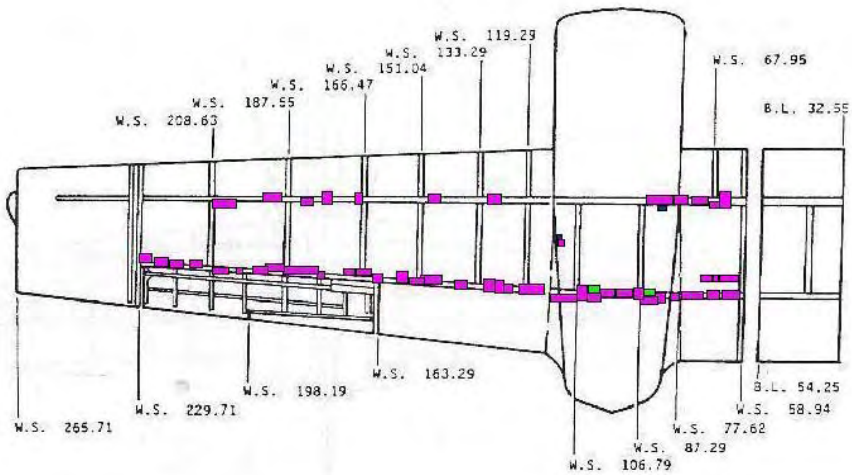

Figure 3-177. Location of Microscopic Examination Findings on the Right Wing Lower Surface

3.5.6.2 Fuselage Channels.

Table 3-15 shows the findings of the microscopic examination on the fuselage channels. Figure 3-178 shows the locations of the defects found on the right fuselage channel. No defects were found on the left fuselage channel.

Table 3-15. Microscopic Examination Results of the Fuselage Channels

Part Number	Defect	Depth (in.)	Area/Length (in.)	Thickness of Part (in.)
Channel assembly, RH FS 100.00 to FS 160.00 (5011025-6)	Multiple areas of corrosion	0.004	20.0 × 1.0 scattered	0.07

RH = Right hand

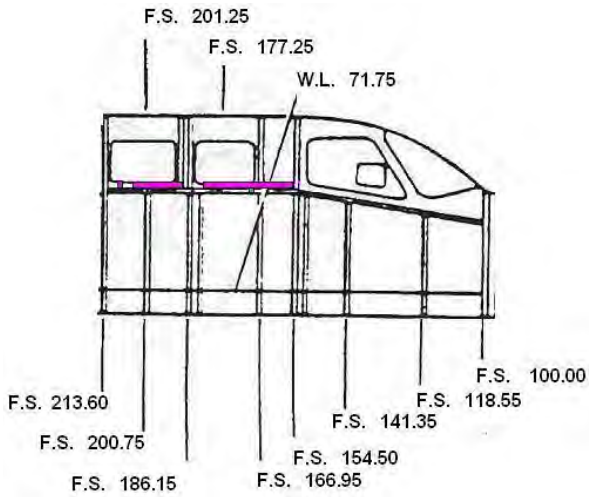

Figure 3-178. Location of Microscopic Examination Findings on the Right Fuselage Channel

3.5.6.3 Horizontal Stabilizer.

Table 3-16 shows the findings of the microscopic examination on the horizontal stabilizer. The locations of the defects on the upper surface of the horizontal stabilizer are shown in figure 3-179, while the locations of the defects on the lower surface are shown in figure 3-180.

Table 3-16. Microscopic Examination Results of the Horizontal Stabilizer

Part Number	Defect	Depth (in.)	Area/Length (in.)	Thickness of Part (in.)
Spar assembly, front horizontal stabilizer (5032001-11)	Corrosion	0.006	1.7 × 0.75, 0.9 × 0.25 0.25 × 1.0	0.05
Spar assembly, front horizontal stabilizer (5032001-11)	Corrosion	0.005	0.85 × 0.6, 0.15 × 0.2	0.05
Spar assembly, front horizontal stabilizer (5032001-11)	Corrosion	0.001	0.4 × 0.2, 0.4 × 0.2, 0.65 × 0.1	0.06
Spar assembly, front horizontal stabilizer (5032001-11)	Corrosion	0.002	5.5 × 0.2 both sides	0.06
Spar assembly, rear horizontal stabilizer (5032002-8)	Corrosion	0.003	40.0 × 0.5 scattered	0.03

Table 3-16. Microscopic Examination Results of the Horizontal Stabilizer (Continued)

Part Number	Defect	Depth (in.)	Area/Length (in.)	Thickness of Part (in.)
Spar assembly, rear horizontal stabilizer (5032002-8)	Corrosion	0.002	40.0 × 0.1 scattered	0.03
Spar assembly, rear horizontal stabilizer (5032002-8)	Corrosion	0.001 0.01	0.15 × 0.3, 0.4 × 0.25, 0.1 × 0.25 1.15 × 0.1, 0.5 × 0.1	0.05 0.1
Spar assembly, rear horizontal stabilizer (5032002-8)	Corrosion	0.012	7.0 × 0.1	0.06
Spar assembly, rear horizontal stabilizer (5032002-8)	Corrosion	0.003 0.019	1.0 × 0.7 0.7 × 0.6	0.085
Spar assembly, rear horizontal stabilizer (5032002-8)	Corrosion	0.005	0.8 × 0.7	0.085
Bracket, elevator hinge mid outboard LH and RH (5334119-1)	One crack	Through	0.05	0.05
Bracket, elevator hinge mid inboard LH and RH (5334119-2)	One crack	Through	0.155	0.05

RH = Right hand
LH = Left hand

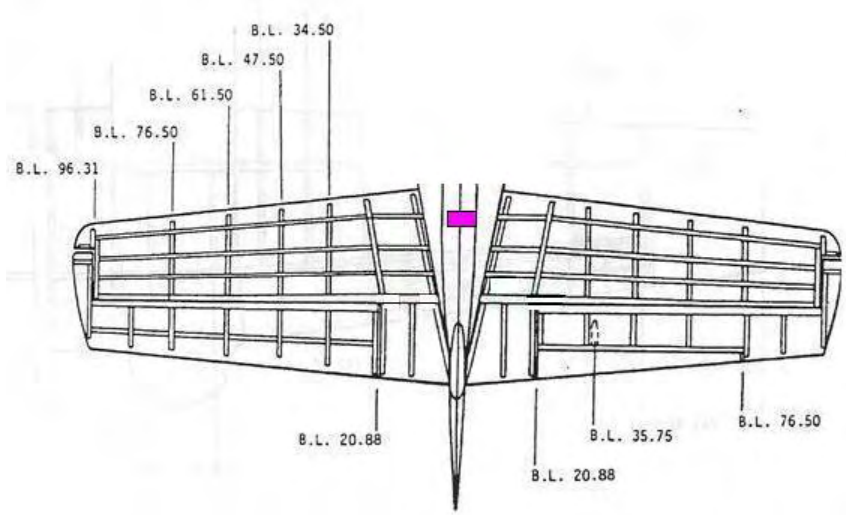

Figure 3-179. Location of Microscopic Examination Findings on the Horizontal Stabilizer Upper Surface

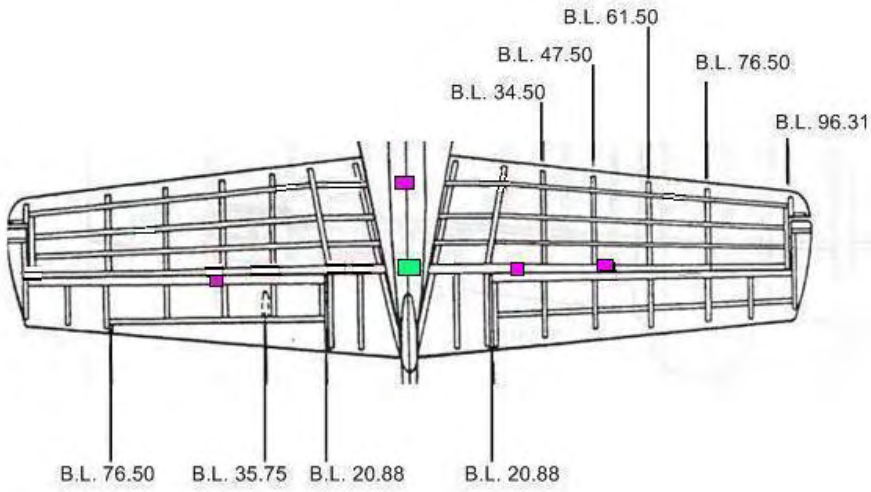

Figure 3-180. Location of Microscopic Examination Findings on the Horizontal Stabilizer Lower Surface

3.5.6.4 Vertical Stabilizer.

Table 3-17 shows the findings of the microscopic examination on the vertical stabilizer. Figure 3-181 shows the locations of the defects on the right side of the vertical stabilizer, while figure 3-182 shows the defect locations on the left side.

Table 3-17. Microscopic Examination Results of the Vertical Stabilizer

Part Number	Defect	Depth (in.)	Area/Length (in.)	Thickness of Part (in.)
Spar assembly, vertical stabilizer rear (5131021-25)	One area of corrosion	0.003	1.8 × 0.5	0.06
Spar assembly, vertical stabilizer front (5131021-24)	Three areas of corrosion	0.008	1.0 × 0.3, 0.8 × 0.4, 0.4 × 0.6	0.14
Spar assembly, vertical stabilizer front (5131021-24)	Multiple areas of corrosion	0.007	0.3 × 0.4, 0.5 × 0.2, 0.5 × 0.3, 0.5 × 0.3	0.14
Spar assembly, vertical stabilizer front (5131021-24)	Four areas of corrosion	0.005	0.9 × 0.3, 0.3 × 0.3, 0.5 × 0.4	0.14
Spar assembly, vertical stabilizer front (5131021-24)	Multiple areas of corrosion	0.010	0.25 × 0.2, 0.4 × 0.4, 0.7 × 0.6, 0.65 × 0.4, 1.1 × 0.6, 0.3 × 0.2	0.14

Table 3-17. Microscopic Examination Results of the Vertical Stabilizer (Continued)

Part Number	Defect	Depth (in.)	Area/Length (in.)	Thickness of Part (in.)
Spar assembly, vertical stabilizer front (5131021-24)	Four areas of corrosion	0.005 0.003	0.4 × 0.4, 0.3 × 0.2 0.7 × 0.4, 0.8 × 0.6	0.14 0.055
Spar assembly, vertical stabilizer front (5131021-24)	Multiple areas of corrosion	0.010	0.5 × 0.4, 0.4 × 0.3, 0.3 × 0.2, 0.3 × 0.4, 0.6 × 0.3	0.14

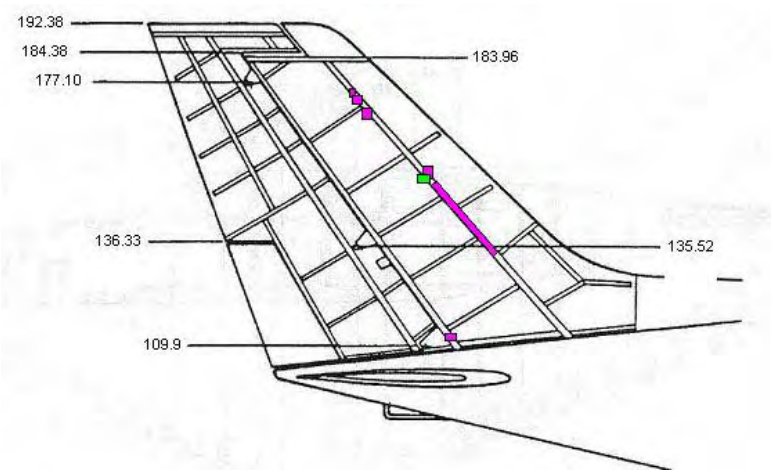

Figure 3-181. Location of Microscopic Examination Findings on the Vertical Stabilizer Right Side

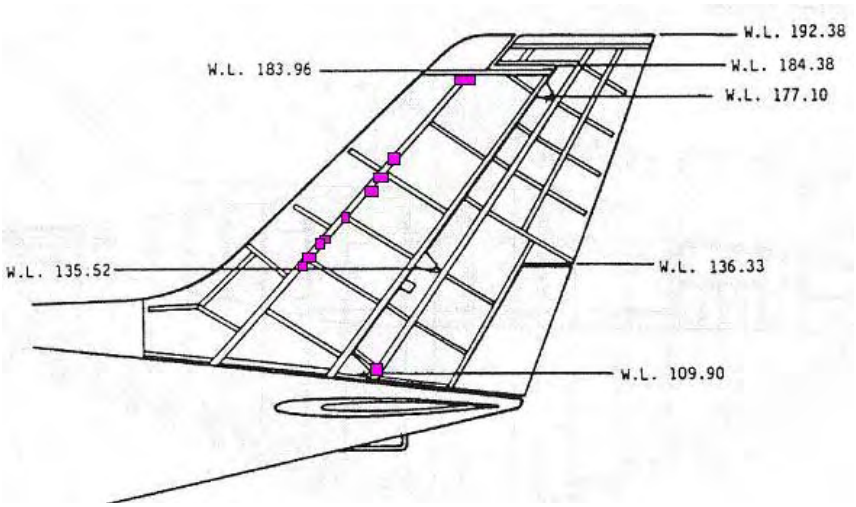

Figure 3-182. Location of Microscopic Examination Findings on the Vertical Stabilizer Left Side

3.5.6.5 Stub Wings.

Table 3-18 shows the findings of the microscopic examination on the stub wings.

Table 3-18. Microscopic Examination Results on the Stub Wings

Part Number	Defect	Depth (in.)	Area/Length (in.)	Thickness of Part (in.)
Fitting, wing attach lower forward carry-through spar WL 65.75 and LBL and RBL 5 (0811350-8)	Multiple areas of corrosion, and three broken out fastener holes	0.020	0.5 × 0.2, 0.1 × 0.1, 0.4 × 0.1, 0.1 × 0.3, 0.1 × 0.3	0.28
Fitting, wing attach lower forward carry-through spar WL 65.75 and LBL and RBL 5 (0811350-8)	Multiple areas of corrosion	0.014	2.0 × 0.5, 0.6 × 0.5, 3.5 × 0.4, 1.1 × 0.4, 0.3 × 1.0, 0.9 × 0.5, 0.75 × 0.2, 0.5 × 0.2	0.2
Fitting, wing attach upper aft carry-through spar WL 70.93 and LBL and RBL 5 (5011023-1)	Three areas of corrosion	0.007	2.0 × 0.4, 1.0 × 0.6, 0.15 × 0.1	0.6
Fitting, wing attach lower aft carry-through spar WL 66.04 and LBL and RBL 5 (5011024-1)	One area of corrosion	0.020	0.3 × 0.1	0.6
Fitting, wing attach lower aft carry-through spar WL 66.04 and LBL and RBL 5 (5011024-1)	Four areas of corrosion	0.002	0.1 × 0.1, 0.1 × 0.1	0.3
Fitting, wing attach upper forward carry-through spar WL 74.87 and LBL and RBL 5 (0811350-7)	Multiple areas of corrosion	0.020	1.7 × 0.4, 0.4 × 0.3, 2.0 × 0.7, 0.2 × 0.4	0.2
Fitting, wing attach upper forward carry-through spar WL 74.87 and LBL and RBL 5 (0811350-7)	Multiple areas of corrosion	0.010	0.1 × 0.2, 0.3 × 0.1, 0.5 × 0.2, 0.5 × 0.4, 0.7 × 0.3, 0.3 × 0.2	0.3
Right stub wing bracket (No P/N)	One crack	Through	2.0	0.065

RBL = Right body line
LBL = Left body line
WL = Water line

3.5.6.6 Carry-Throughs.

Table 3-19 shows the findings of microscopic examination on the carry-through structure.

Table 3-19. Microscopic Examination Results on the Carry-Through Structure

Part Number	Defect	Depth (in.)	Area/Length (in.)	Thickness of Part (in.)
Aft carry-through aft web right middle	Three cracks	Through	0.077, 0.172, 0.055	0.04
Spar assembly, aft carry-through (5211173-2)	Multiple areas of corrosion	0.002 0 .003	Scattered	0.15 0.5
Aft carry-through aft web left middle	Three cracks	Through	0.2, 0.62, 0.35	0.04
Aft carry-through forward web right	Six areas of corrosion	0.006	0.25 × 0.15, 0.3 × 0.21, 0.4 × 0.15, 0.7 × 0.1, 0.195 × 0.4, 1.0 × 0.6	0.04
Aft carry-through forward web right middle	Four cracks, one area of corrosion	Through 0.006	0.2, 0.23, 2.15, 4.0 × 0.5, 0.26	0.04
Aft carry-through forward web left middle	Three cracks, one area of corrosion	Through 0.005	0.378, 0.186, 0.65, 0.877 × 0.18	0.04
Aft carry-through forward web left	Four areas of corrosion	0.004	0.6 × 0.25, 1.3 × 0.38, 1.01 × 0.12, 0.3 × 0.125	0.04
Aft carry-through forward web splice	Two cracks	Through	0.2, 0.2	0.06
Forward carry-through upper right attach	Five areas of corrosion	0.005	2.27 × 0.68, 0.25 × 0.25, 0.25 × 0.25, 1.8 × 0.535, 1.9 × 0.7	0.2
Forward carry-through upper right attach	Two areas of corrosion	0.003	1.7 × 0.85, 0.4 × 0.5	0.2
Forward carry-through upper right attach	Multiple areas of corrosion	0.0025 0.004	Scattered	0.15 0.4
Forward carry-through upper right attach	Multiple areas of corrosion	0.007 0 .003	Scattered	0.15 0.6
Forward carry-through upper right attach	One area of corrosion, one crack	Through 0.015	1.5 × 0.5, 2.1	0.04
Rib assembly, LH BL 54.25 (5111367-21)	Two cracks	Through	0.96, 0.57	0.03

Table 3-19. Microscopic Examination Results on the Carry-Through Structure (Continued)

Part Number	Defect	Depth (in.)	Area/Length (in.)	Thickness of Part (in.)
Forward carry-through aft web right middle	Four cracks	Through	0.2, 0.5, 0.23, 0.6	0.04
Forward carry-through aft web left middle	Four cracks	Through	0.53, 0.26, 0.146, 0.215	0.04
Forward carry-through forward web right	Five cracks	Through	0.135, 0.6, 2.98, 0.52, 0.48,	0.04
Forward carry-through forward web right middle	Five cracks, six areas of corrosion	Through 0.006	0.2, 0.425, 0.24, 0.562, 0.578, 0.08 × 0.17	0.04
Forward carry-through forward web left middle	Five cracks, one area of corrosion	Through 0.003	0.463, 0.395, 0.36, 0.13, 0.6, 1.0 × 0.43	0.04
Forward carry-through forward web left	Two cracks	Through	0.4, 0.47	0.04

LH = Left hand

3.5.6.7 Engine Beams.

Table 3-20 shows the findings of the microscopic examination on the engine beams.

Table 3-20. Microscopic Examination Results on the Engine Beams

Part Number	Defect	Depth (in.)	Area/Length (in.)	Thickness of Part (in.)
Beam, nacelle outboard LH (5654109-5)	Two cracks, wear	Through	0.4, 0.35	0.063
Beam, nacelle outboard LH (5654109-5)	Two cracks, wear	Through	0.38, 0.428	0.063
Channel, outboard LH (5654111-1)	One crack	Through	1.5	0.036
Angle assembly, LH outboard and RH inboard (5650204-13)	One crack	Through	2.125	0.02
Angle assembly, LH outboard and RH inboard (5650204-13)	One crack	Through	0.11	0.02
Angle assembly, outboard RH (5650118-2)	One crack	Through	1.15	0.05

Table 3-20. Microscopic Examination Results on the Engine Beams (Continued)

Part Number	Defect	Depth (in.)	Area/Length (in.)	Thickness of Part (in.)
Angle assembly, RH outboard and LH inboard (5650204-14)	One crack	Through	0.095	0.02
Angle assembly, RH outboard and LH inboard (5650204-14)	One crack	Through	0.825	0.02
Strap, outboard LH and RH (5654112-10)	Multiple areas of corrosion	0.013	28.0 × 1.5	0.125
Tee, inner LH and RH nacelle (5654112-9)	Multiple areas of corrosion	0.005	2.0 × 1.0, 2.0 × 1.5, 1.0 × 1.0, 0.75 × 0.7	0.125
Tee, inner LH and RH nacelle (5654112-9)	Multiple areas of corrosion	0.008	2.0 × 1.0, 2.0 × 1.5, 1.0 × 1.0, 0.75 × 0.7	0.125
Tee, inner LH and RH nacelle (5654112-9)	Multiple areas of corrosion	0.002	3.358 × 1.42	0.125
Beam, nacelle outboard RH (5654109-4)	One crack	Through	0.972	0.032
Beam, nacelle inboard RH (5654109-3)	Three cracks	Through	0.68, 0.458, 3.5	0.032
Beam, nacelle inboard LH (5654109-2)	Four cracks	Through	0.94, 0.127	0.032
Beam, nacelle inboard LH (5654109-2)	Two cracks	Through	1.7, 0.57	0.04
Beam, nacelle outboard LH (5654109-1)	Three cracks	Through	0.37, 0.125, 1.06	0.032
Beam, nacelle outboard LH (5654109-1)	Two cracks	Through	2.095, 1.5	0.04

LH = Left hand
RH = Right hand

3.5.7 Correlation Between Alternative NDI Indications and Microscopic Examination Findings.

All indications from the alternative NDI techniques were microscopically examined to determine if actual flaws were present in these target areas. Figure 3-183 shows the color coding used to identify the location for the different types of alternative NDI indications as well as to distinguish between different severities of corrosion and cracks found during microscopic examination.

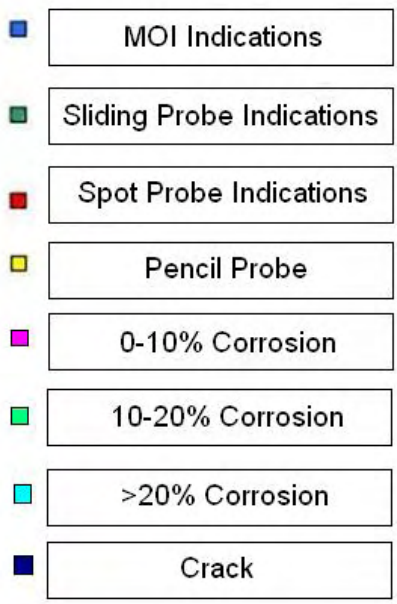

Figure 3-183. Color Codes for Location Indications

Figures 3-184 and 3-185 show the locations of cracks and areas of corrosion detected during the microscopic examination and indications from the alternative NDI assessment of primary structure for the upper and lower surfaces of the left wing, respectively. Even though some of the alternative NDI indications were verified microscopically, not all of the alternative NDI indications were verified on the upper surface of the left wing. A larger number of the alternative NDI indications were verified on the lower surface of the left wing, especially on the rear spar.

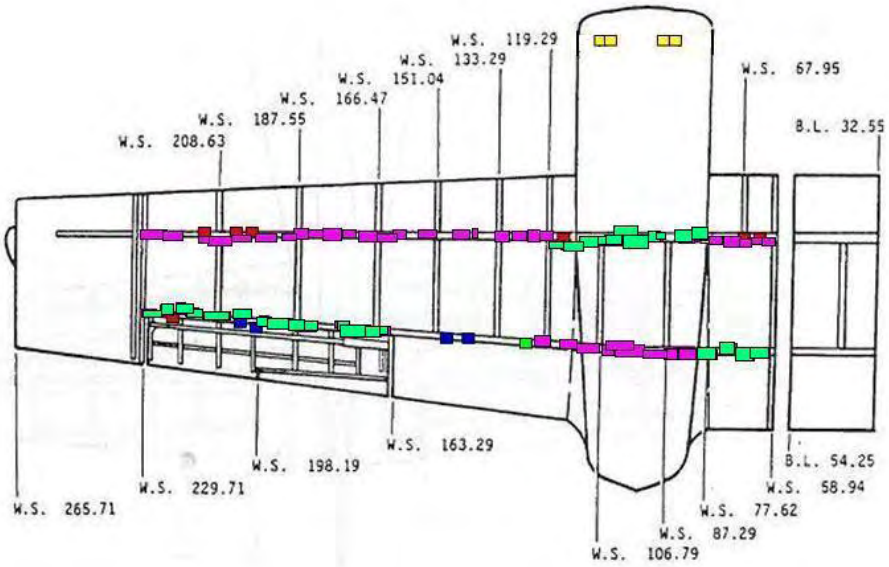

Figure 3-184. Location of Findings From Alternative NDI and Microscopic Examination on the Left Wing Upper Surface

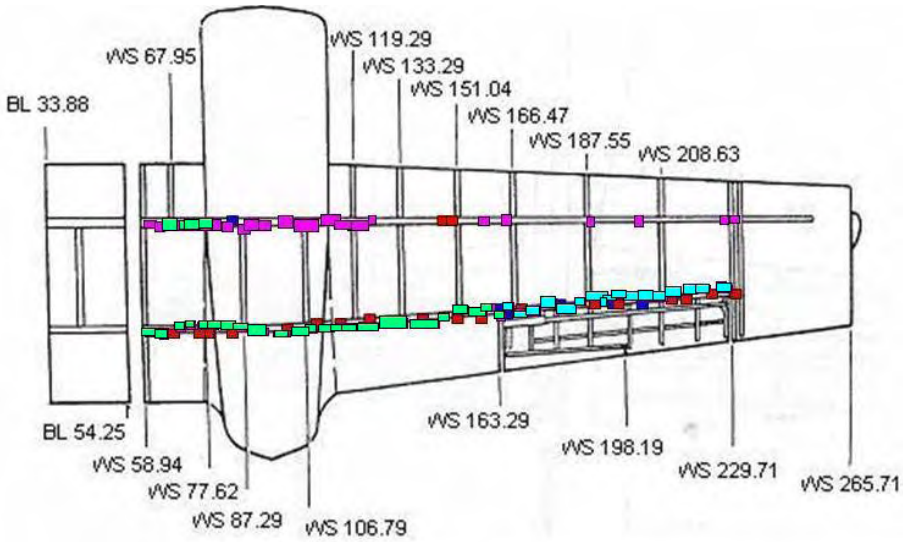

Figure 3-185. Location of Findings From Alternative NDI and Microscopic Examination on the Left Wing Lower Surface

Figures 3-186 and 3-187 show the locations of cracks and areas of corrosion detected during the microscopic examination and indications from the alternative NDI assessment of primary structure for the upper and lower surfaces on the right wing, respectively. Even though some of the alternative NDI indications were verified microscopically, not all of the alternative NDI indications were verified on both the upper and lower surfaces of the right wing.

Figure 3-186. Location of Findings From Alternative NDI and Microscopic Examination on the Right Wing Upper Surface

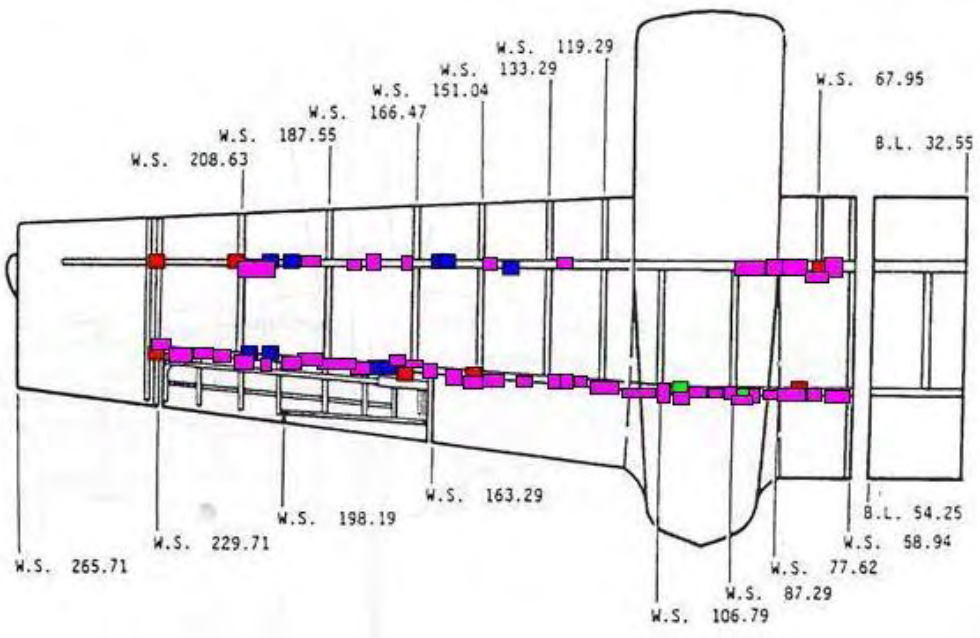

Figure 3-187. Location of Findings From Alternative NDI and Microscopic Examination on the Right Wing Lower Surface

Figure 3-188 shows the locations of cracks and areas of corrosion observed during the microscopic examinations on the right wing fuselage channel. Also shown on figure 3-188 are the indications obtained during the alternative NDI. A comparison of the microscopic examination results and alternative NDI indications for the right fuselage channel shows a relatively good correlation. However, the alternative NDI indications could not be verified microscopically on the left fuselage channel, as illustrated in figure 3-189.

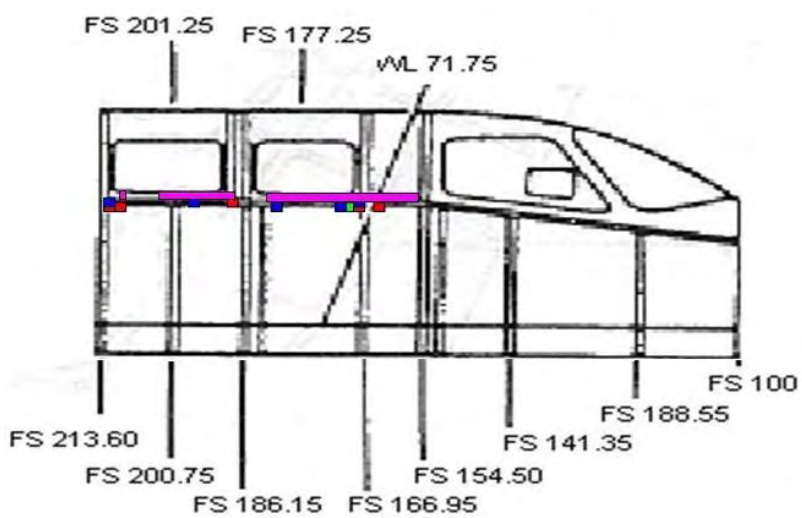

Figure 3-188. Location of Findings From Alternative NDI and Microscopic Examination on the Right Fuselage Channel

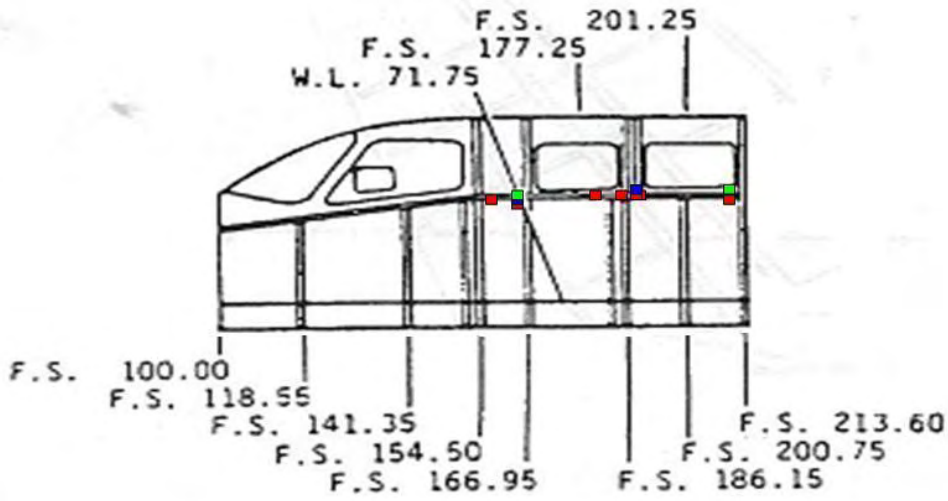

Figure 3-189. Location of Findings From Alternative NDI and Microscopic Examination on the Left Fuselage Channel

The locations of cracks and areas of corrosion detected during the microscopic examinations and alternative NDI indications for the upper and lower surfaces of the horizontal stabilizer are shown in figures 3-190 and 3-191, respectively. None of the alternative NDI indications on the upper surface were verified microscopically, and only a couple of the NDI indications on the lower surface were verified.

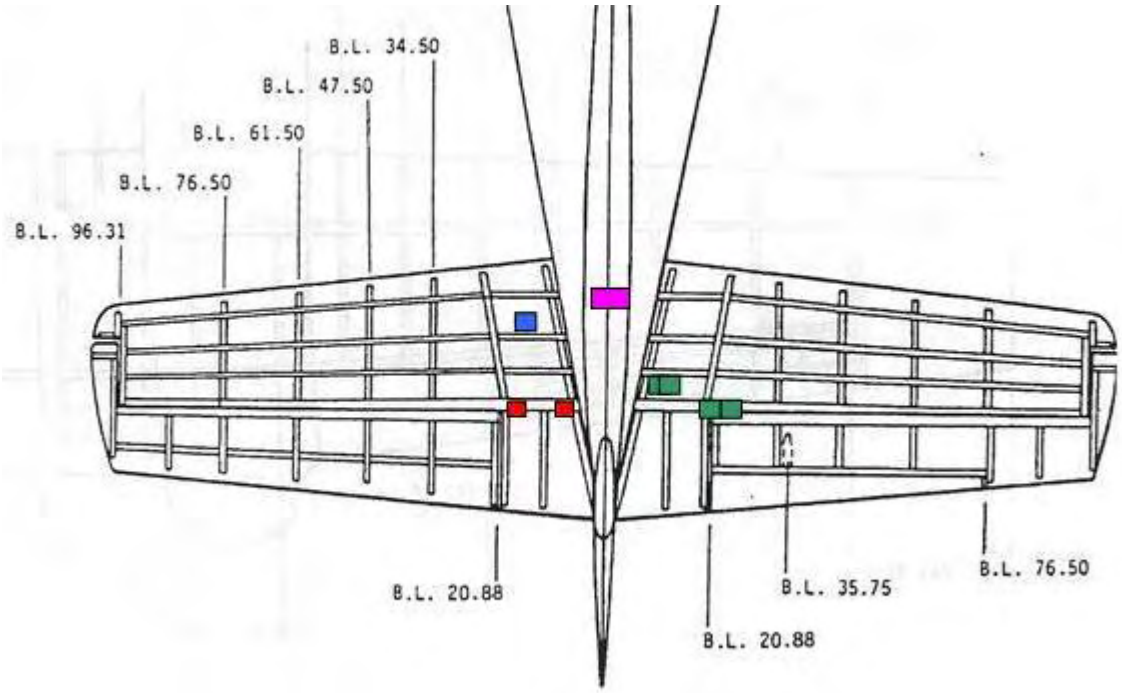

Figure 3-190. Location of Findings From Alternative NDI and Microscopic Examination on the Horizontal Stabilizer Upper Surface

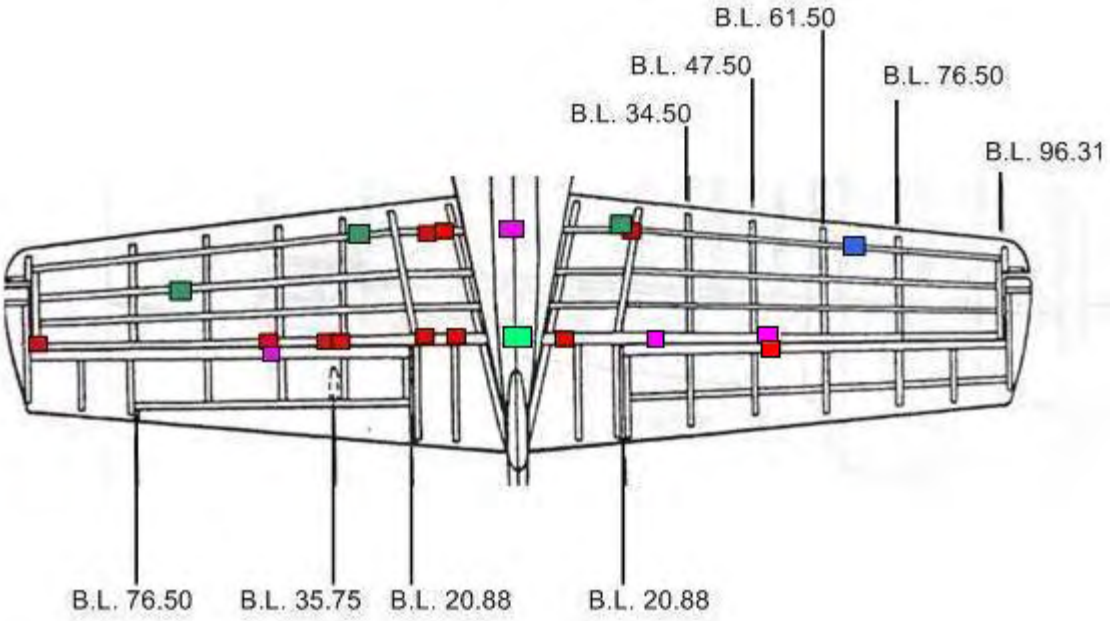

Figure 3-191. Location of Findings From Alternative NDI and Microscopic Examination on the Horizontal Stabilizer Lower Surface

Figures 3-192 and 3-193 show the locations of cracks and corrosion observed during the microscopic examinations and alternative NDI indications on the left and right surfaces of the vertical stabilizer. No well-defined correlation could be established between the NDI and microscopic examination results.

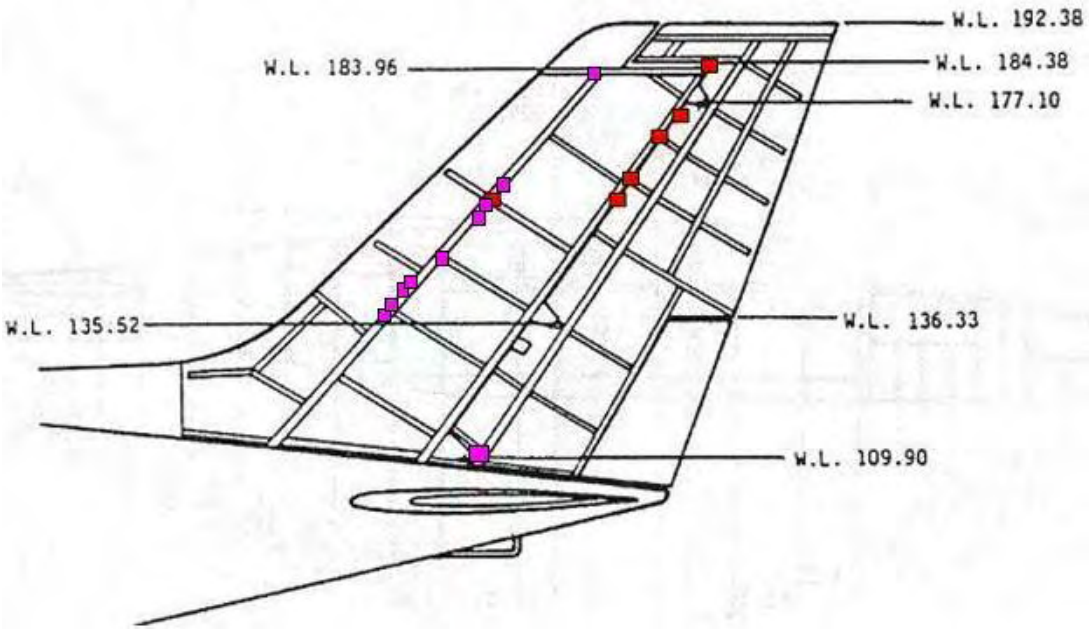

Figure 3-192. Location of Findings From Alternative NDI and Microscopic Examination on the Vertical Stabilizer Left Surface

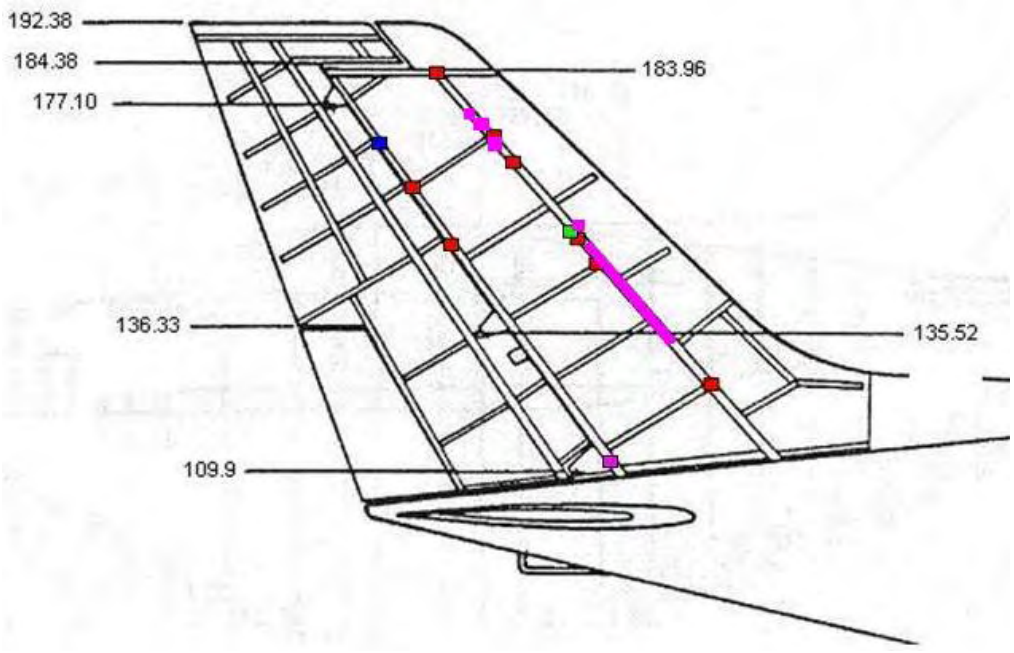

Figure 3-193. Location of Findings From Alternative NDI and Microscopic Examination on the Vertical Stabilizer Right Surface

4. AIRPLANE WIRING ASSESSMENT OF CESSNA 402C.

The wiring assessment for the Cessna 402C was composed of two major phases: the NDI and testing phase, and the destructive testing phase. General visual inspections, bond resistance measurements, the hard fault detection test, intrusive visual inspections, wiring insulation microscopic inspections, insulation resistance testing, circuit breaker testing, and relay inspection composed the NDI and testing portion of the wiring assessment. The destructive testing portion was composed of the wet DWV test and the mandrel bend/wrap back test.

4.1 NONDESTRUCTIVE INSPECTION AND TESTING.

The NDI and testing phase of the airplane wiring assessment included the following areas:

- General visual inspection
- In situ wiring tests
- Laboratory tests

4.1.1 General Visual Inspection.

The purpose of performing the general visual inspections on the wiring systems of this airplane was to check the conditions of the wires for any defects or flaws, which could be hazardous to the airplane in flight. This is the first step performed prior to any nondestructive testing that is done to assess the maintenance activities performed on an airplane.

General visual inspections were performed without disturbing the wiring condition in the airplane. The inspection was carried out for general wiring condition (chafing, rubbing, burning, or tearing of the wires), installation defects, terminations, connectors, groundings, and circuit breakers. The wiring conditions were recorded during the inspection process and photographs were taken to support these recorded conditions.

4.1.1.1 Inspection Areas.

The airplane was divided into 17 different zones to perform the general visual inspections on the wiring components. A location code was given to each zone for recording convenience, as shown in table 4-1. Each zone then represented a wiring system or a part of a wiring system of an airplane. Each zone was thoroughly inspected to record the initial conditions.

Table 4-1. Location Name and Code

Location Name	Location Code
Right engine	REN
Left engine	LEN
Left console (cockpit)	LCC
Right console (cockpit)	RCC
Forward bulkhead	FBH
Baggage compartment	BGC

Table 4-1. Location Name and Code (Continued)

Location Name	Location Code
Right wing tip	RWT
Left wing tip	LWT
Upper bulk head	UBH
Tail	TAL
Right wing	RWN
Left wing	LWN
Left landing gear	LLG
Right landing gear	RLG
Nose landing gear	NLG
Cockpit floor	CFL
Instrument panel (cockpit)	CIP

4.1.1.2 Inspection Codes.

The inspection codes were designed in accordance with the wiring inspection/practices training presentation of the FAA academy. The coding was adopted so that it would be less complicated while tagging various defective locations on a particular wire. The defect codes and their descriptions are given in table 4-2. In each zone, the defective wires and wire bundles were tagged separately for identification purposes. For example, the first wire inspected under zone right engine (REN) is tagged as REN-1. Every defect or flaw observed on a wire is labeled and tagged. For example, if it is a third defect located on a wire, under zone REN, it was labeled as REN-1-3. Then, each defect was associated with a code that would describe the degrading wiring condition. For example, REN-1-3 would have a basic flaw of chafing of the outer insulation, which is represented by the code 01A.

Table 4-2. Inspection Codes

Type	Serial	Defect Description	Defect Code
Wiring Conditions	1	Rubbing/chafing of outer insulation	01A
	2	Cutting through outer insulation	01B
	3	Exposed shield	01C
	4	Damaged shield	01D
	5	Chafing/cutting of inner insulation	01E
	6	Exposed inner conductor	01F
	7	Damaged inner conductor	01G
	8	Heat damage	01H
	9	Fluid/chemical/dust contamination	01J
	10	Corroded shield/conductors	01K
	11	Illegible label	01L
	12	Others	01X

Table 4-2. Inspection Codes (Continued)

Type	Serial	Defect Description	Defect Code
Installations	13	Inadequate clearance to structure	02A
	14	Improper wire riding on other wire bundle	02B
	15	Improper bend radius (10 × wire/bundle diameter)	02C
	16	Missing/deteriorated ties	02D
	17	Missing/deteriorated grommets	02E
	18	Improper clamp condition/size	02F
	19	Excessive slack/sag between clamps	02G
	20	Excessive strain on wires	02H
	21	Improper T or Y breakout	02J
	22	Repaired wires	02K
	23	Not labeled properly	02L
	24	Unused wires improperly stowed	02M
	25	Improper termination of wire (no cap)	02N
	26	Others	02X
Terminations	27	Loose/broken terminals	03A
	28	Corroded terminals	03B
	29	Improper grounding condition	03C
	30	High bonding resistance	03D
	31	Others	03X
Connectors	32	Insert damage/deterioration	04A
	33	Contact arcing/fretting	04B
	34	Missing/damaged/loose back shells	04C
	35	Missing hardware	04D
	36	Others	04X

4.1.1.3 Recording Wiring Conditions.

The wiring conditions of each zone, after performing labeling and tagging, were recorded in a relational database using Microsoft® Access®. Photographs were taken for each defective location during the inspections. All photographs were linked to the database to support the wiring conditions. The following are the important parameters recorded for a clearer understanding of the conditions.

- The zone name and number
- The wire number
- The type of defects that are associated with the wiring codes
- Additional comments describing the wiring faults

4.1.1.4 General Visual Inspection Results.

The general visual inspections were performed on the undisturbed wires. The purpose of this inspection was to determine the general condition of the wires in the right and left engine compartment, right and left console, forward bulkhead, baggage compartment, upper bulkhead, tail, right and left wings, landing gear, cockpit floor, and the instrument panel. The inspectors were looking for wiring defects like rubbing or chafing of outer insulation, exposed inner conductor, damaged shield, repaired wires, contamination, cracked wires, corroded terminals, improper termination, and heat damage.

4.1.1.4.1 Right Engine Compartment.

The majority of the wires in the right engine compartment were worn and dirty, as shown in figures 4-1 and 4-2. Basic flaws like chafing or rubbing of the outer insulation, exposed inner conductor, damaged shield, and repaired wires were also observed. There were locations in the right engine compartment where exposed inner conductors were found. An example of such a wire is shown in figure 4-3. Some locations also had wires whose shield was exposed due to rubbing of the outer insulation. Examples of this are shown in figures 4-4 through 4-6. Some wire bundles had outer insulation damage, like the example in figure 4-7. A few terminals did not have a protective shield or termination cover, as shown in figure 4-8. A bundle of wires that ran across the engine structure suffered chafing due to contact with the structure, which resulted in rubbing and chafing, as shown in figure 4-9. Many sections also had repaired wires. Some of these repaired wires also showed signs of chafing, as shown in figure 4-10.

Figure 4-1. Right Engine Compartment

Figure 4-2. Worn and Dirty Wires in Right Engine Compartment

Figure 4-3. Exposed Inner Conductor

Figure 4-4. Chafing of Outer Insulation and Exposed Shield

Figure 4-5. Damaged Shield Due to Cut Outer Insulation

Figure 4-6. Chafing, Damaged Shield, and Exposed Inner Conductor

Figure 4-7. Damaged Outer Insulation

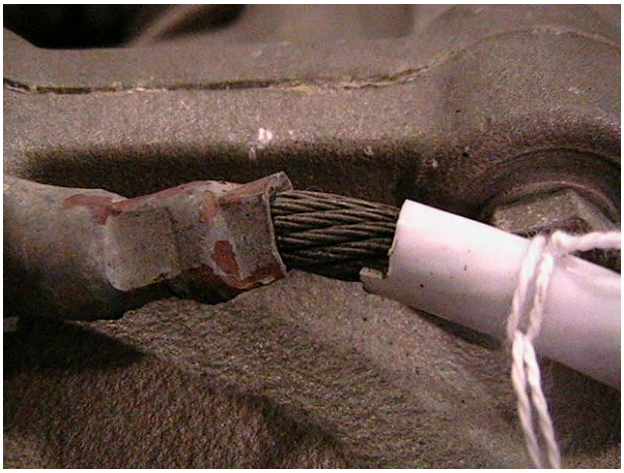

Figure 4-8. Improper Termination

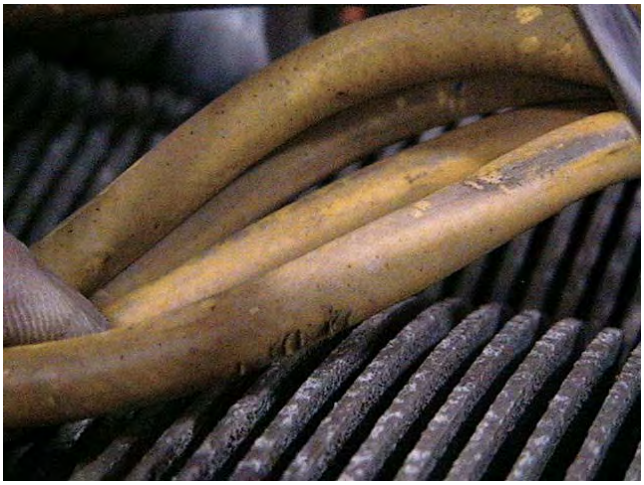

Figure 4-9. Chafing Due to Wires Rubbing on the Structure

Figure 4-10. Chafing of the Repaired Wire Sections

4.1.1.4.2 Left Engine Compartment.

Figure 4-11 shows the left engine compartment prior to inspection. From the visual inspections of the left engine, it was found that most of the wires were repaired wires. The inspection showed some wires with cut outer insulation, as shown in figure 4-12. Figure 4-13 shows a wire with a damaged outer shield. In some places, the wire shields were completely exposed, as shown in figure 4-14. Some locations in the left engine compartment had the entire outer insulation of the bundled wire damaged. All the wires in the bundle were exposed due to this damage. Figure 4-15 shows the outer insulation of the bundle being exposed. Other defects that were found were rubbing, chafing, and cutting of wires, as well as exposed inner conductors, as shown in figures 4-16 to 4-18. There were also some locations that were found greasy and dirty, many times at terminations and splices. Figures 4-19 and 4-20 show photographs of these wires. The defective wiring conditions that were observed were chafing, rubbing and cutting of outer insulations, inner conductor exposed, and greasy termination. There were also some wires found that were repaired, and the shield of some wires was exposed.

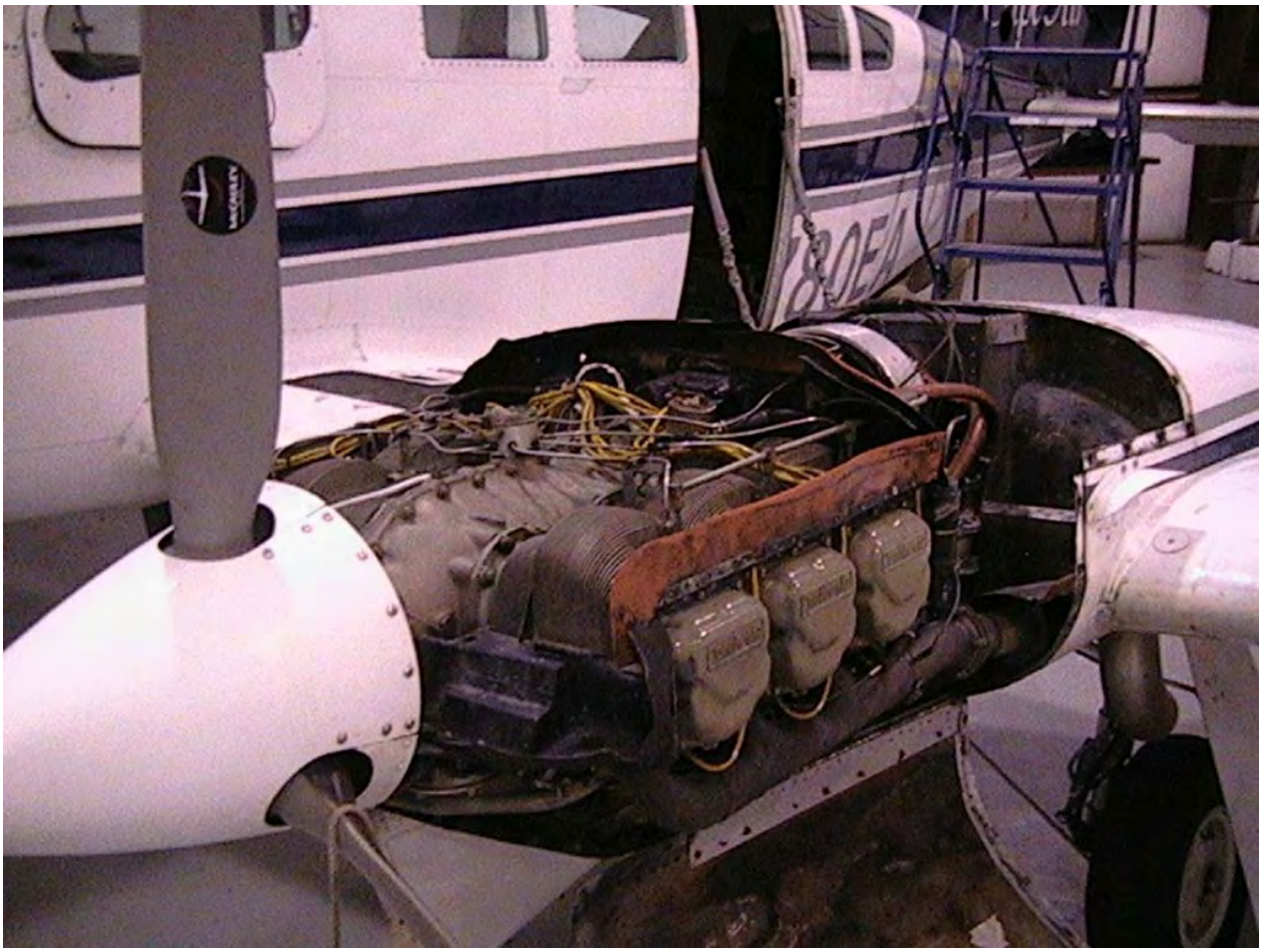

Figure 4-11. Left Engine Compartment

Figure 4-12. Cut Outer Insulation

Figure 4-13. Damaged Outer Shield

Figure 4-14. Exposed Shield, Left Engine Compartment

Figure 4-15. Bundle of Wire Exposed Due to Cutting of Outer Insulation

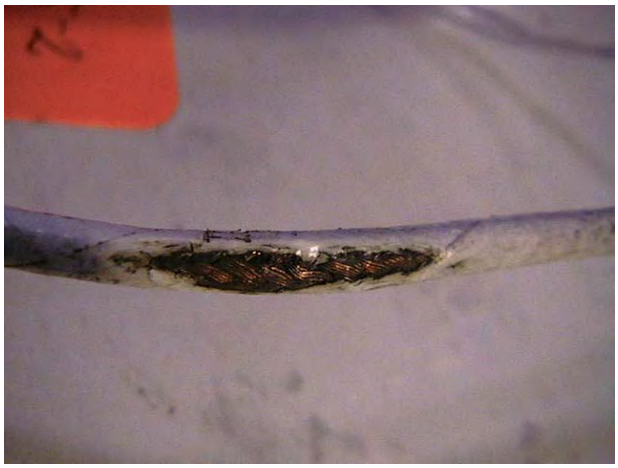

Figure 4-16. Exposed Shield Due to Chafing

Figure 4-17. Rubbing and Chafing of Wire

Figure 4-18. Exposed Inner Conductor Due to Chafing

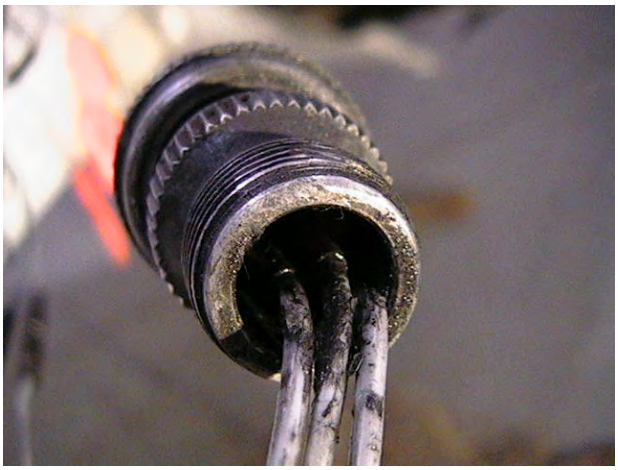

Figure 4-19. Grease Contamination at a Termination

Figure 4-20. Grease Contamination at Splices

4.1.1.4.3 Left Console (Cockpit).

Figure 4-21 shows a photograph of the left console section in the cockpit before the visual inspection. Most of the wires in the left console section in the cockpit were found to be without defects. Some defects that were observed were cracked outer insulation, exposed inner conductor, and corroded terminals. Figures 4-22 to 4-24 show some of these defects.

Figure 4-21. Left Console (Cockpit)

Figure 4-22. Cracked Outer Insulation, Left Console

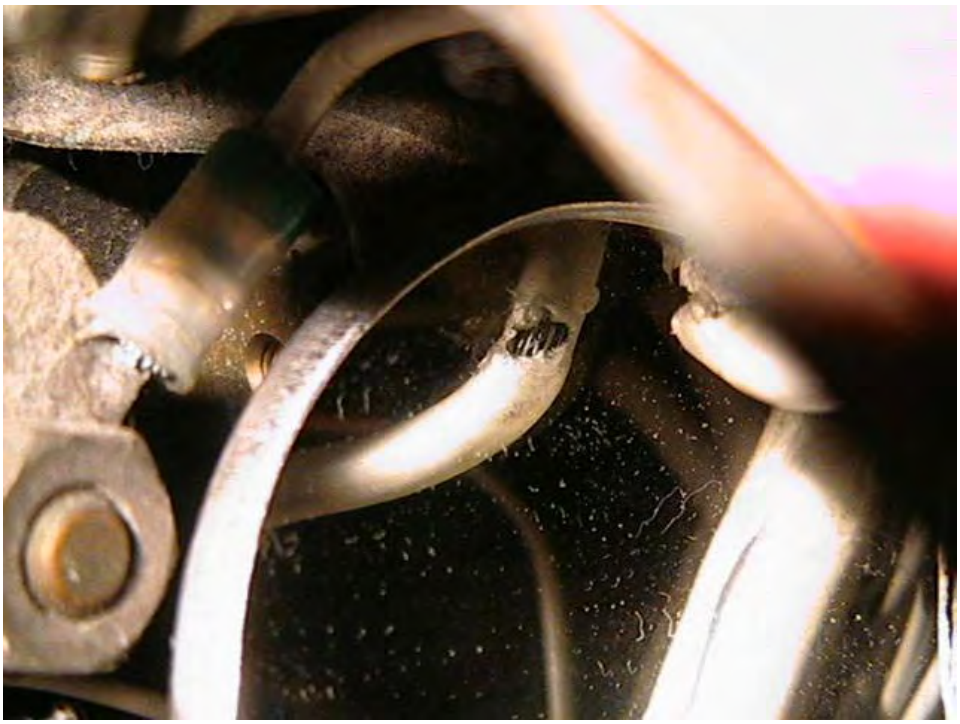

Figure 4-23. Exposed Inner Conductor, Left Console

Figure 4-24. Corroded Ground Terminal

4.1.1.4.4 Right Console (Cockpit).

Figure 4-25 shows the right console cockpit area. Most of the wires in this section were in good condition; however, some defects were found. These defects were mostly improper terminations of unused wires. There were a few defects like broken connections and heat damaged inner conductors such as the examples shown in figures 4-26 through 4-28.

Figure 4-25. Right Console (Cockpit)

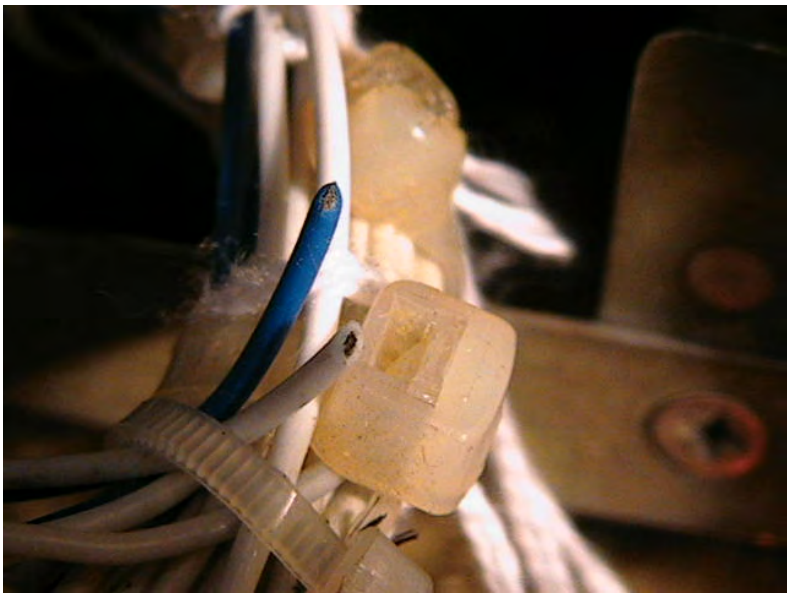

Figure 4-26. Improper Termination of Unused Wires, Right Console

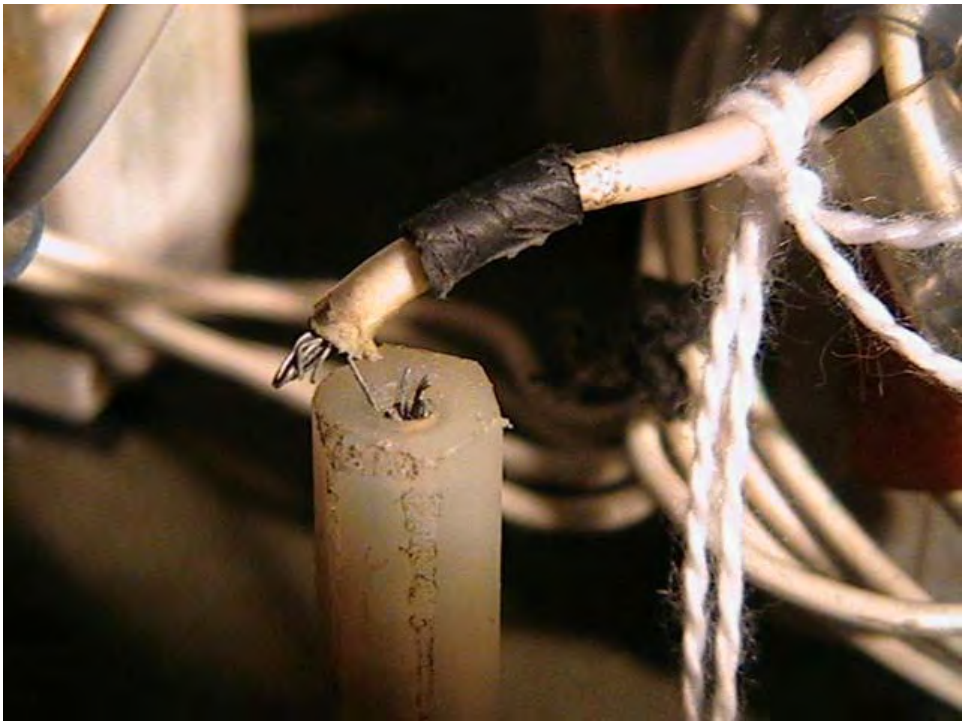

Figure 4-27. Broken Connection

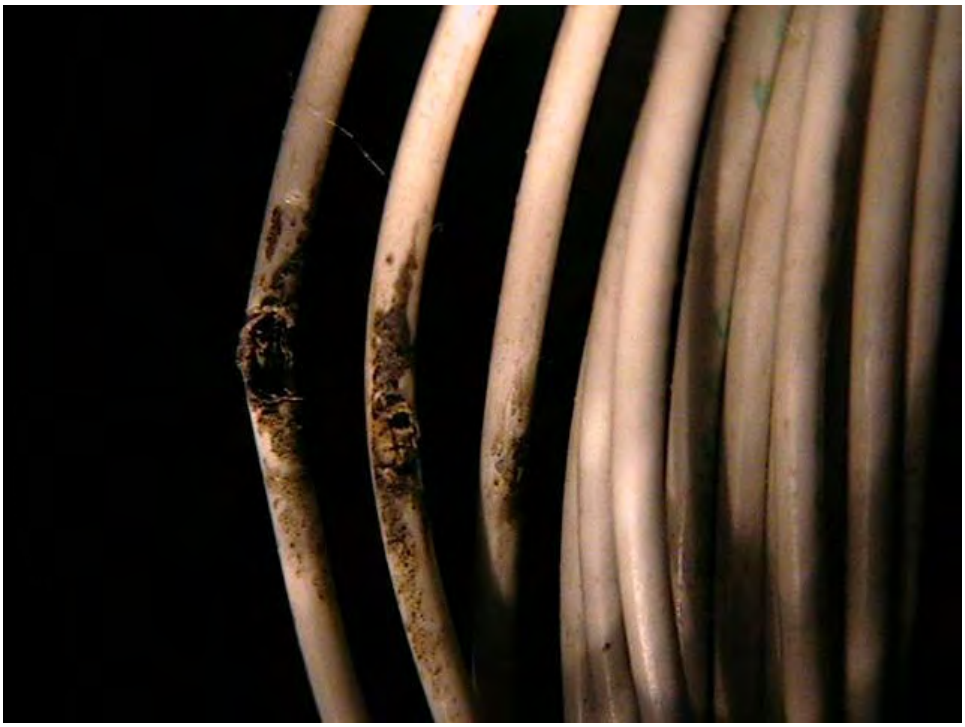

Figure 4-28. Heat-Damaged Inner Conductor

4.1.1.4.5 Forward Bulkhead.

Figure 4-29 shows the forward bulkhead. Few defects were found in this section. One defect found was a wire bundle routed right under an air-inlet pipe causing damage to the wires and the pipe, as shown in figure 4-30.

Figure 4-29. Forward Bulkhead

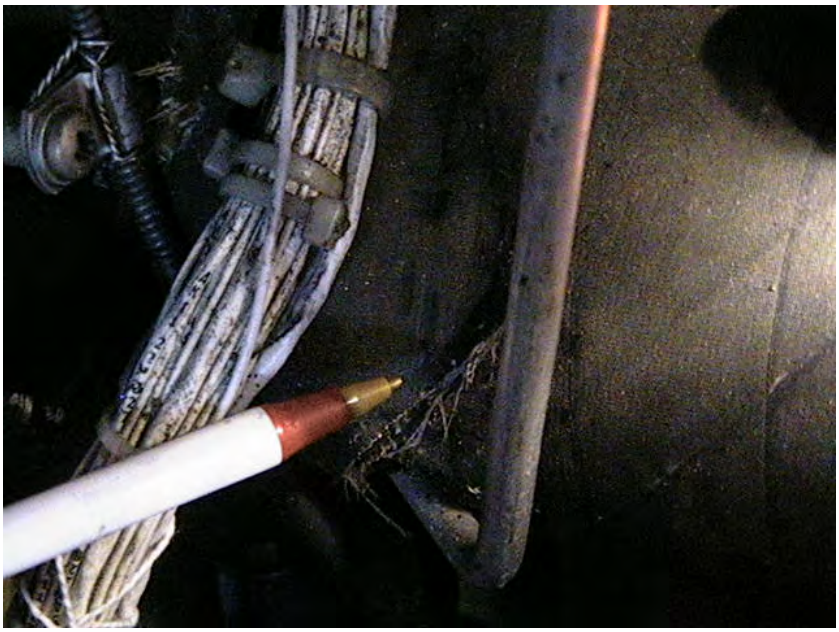

Figure 4-30. Wire Bundle Damaging the Air-Inlet Pipe

4.1.1.4.6 Baggage Compartment.

The baggage compartment did not have many wire defects. There were mostly dust- and grease-contaminated wire bundles, as shown in figures 4-31 and 4-32, and one case of improper bend radii of the wire, as shown in figure 4-33.

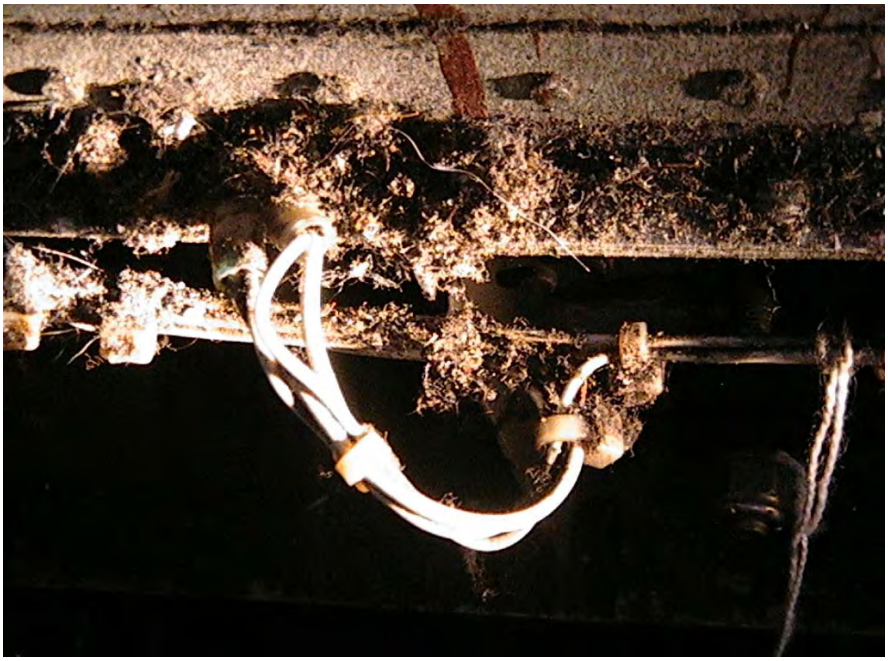

Figure 4-31. Dust-Contaminated Wire Bundle

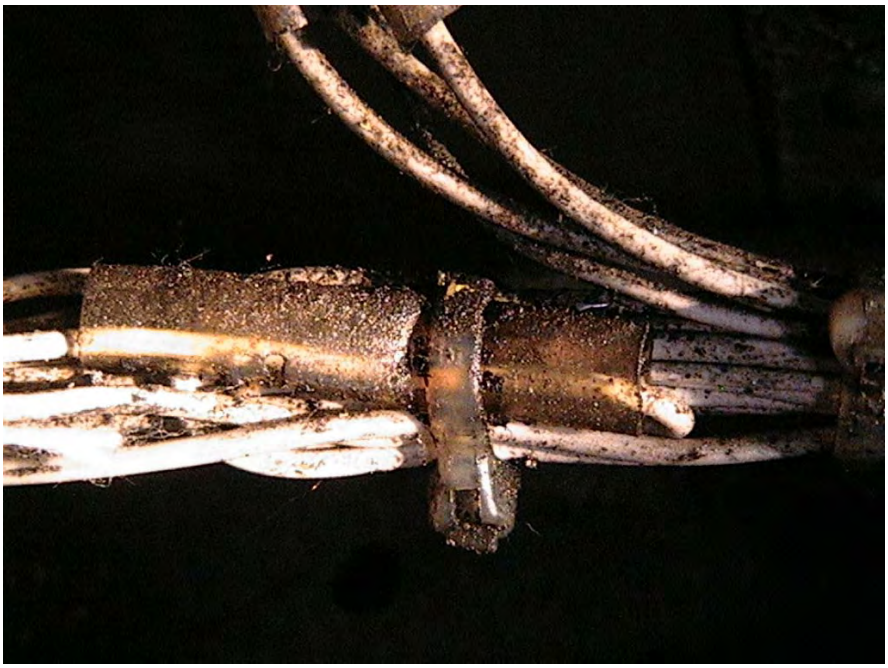

Figure 4-32. Grease-Contaminated Wire Bundle

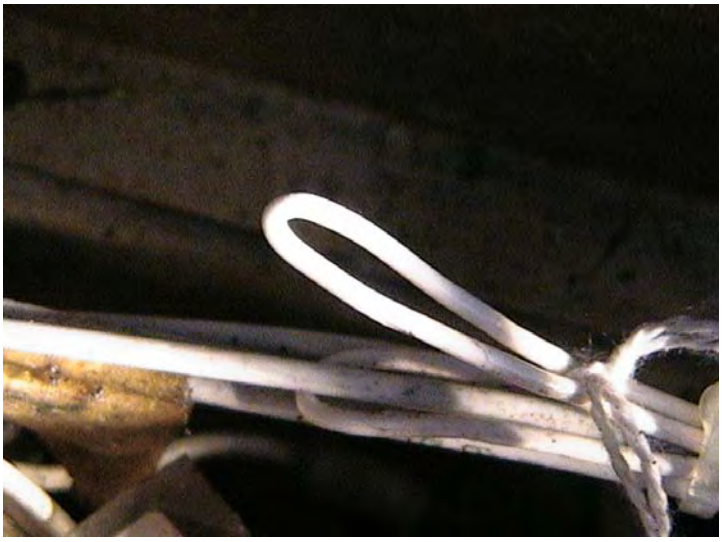

Figure 4-33. Improper Bend Radii of the Wire

4.1.1.4.7 Upper Bulkhead.

Figure 4-34 shows the upper bulkhead of the Cessna 402C. This section did have some significant defects in terms of wiring and electrical instrument panel installation. Some instrument panels were found to be hanging without proper support to the structure. Figure 4-35 shows an instrument hanging without proper installation. Other defects like inadequate clearance to structure as well as unused wires improperly stowed were also found, as shown in figures 4-36 and 4-37. Other defects, such as improper termination of wires as well as exposed inner conductors, were also found, as shown in figures 4-38 and 4-39. Other defects, such as corroded terminals and missing hardware, were also found, but they were generally insignificant.

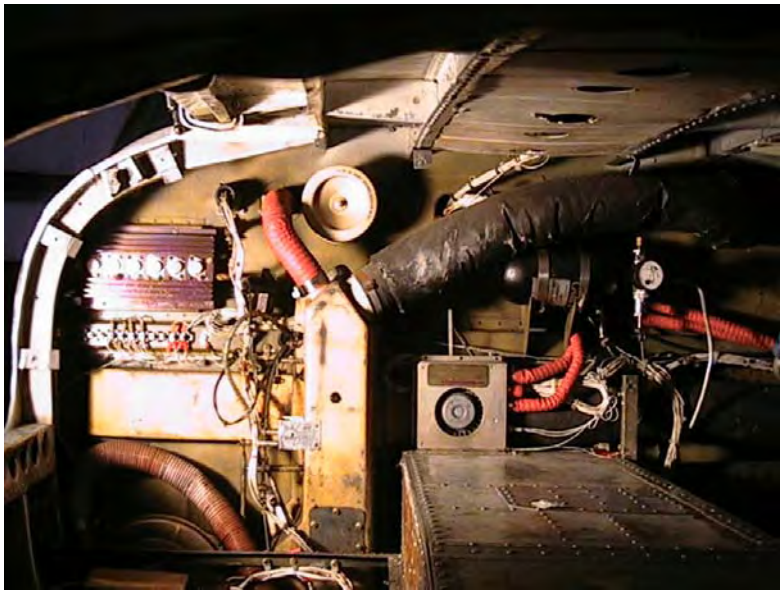

Figure 4-34. Upper Bulkhead

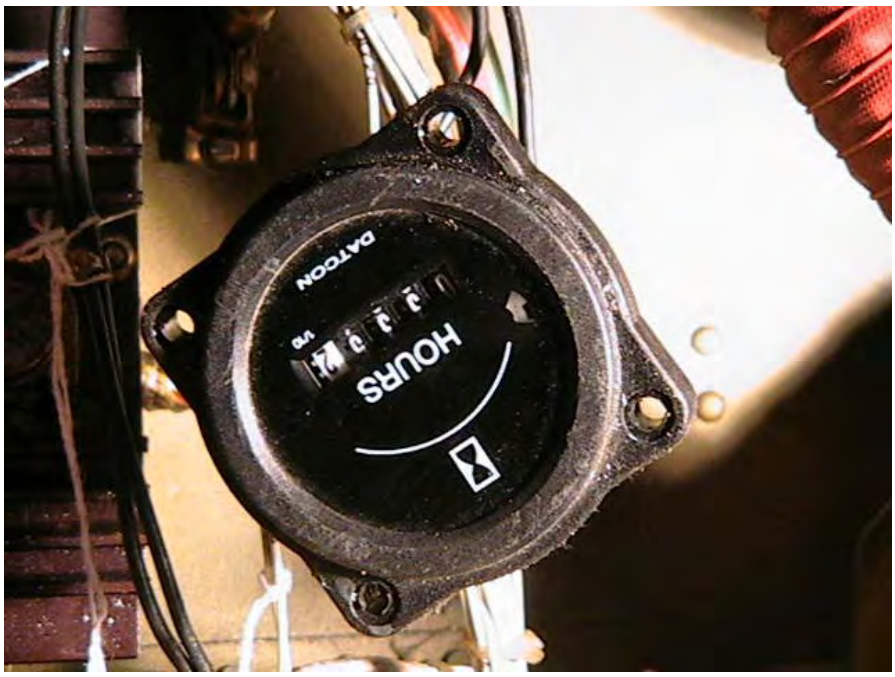

Figure 4-35. Instrument Improperly Installed

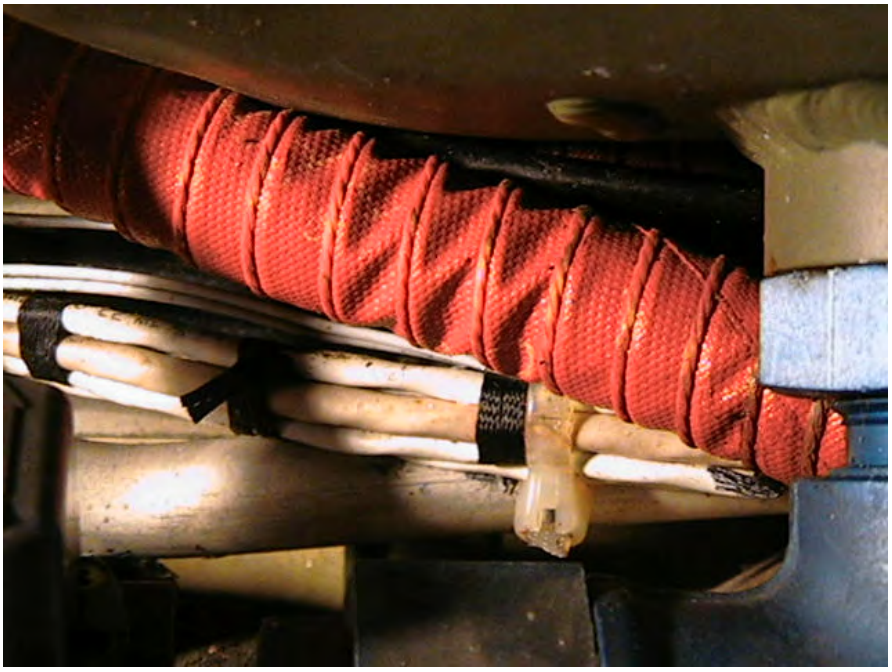

Figure 4-36. Inadequate Clearance to Structure

Figure 4-37. Unused Wires Improperly Stowed

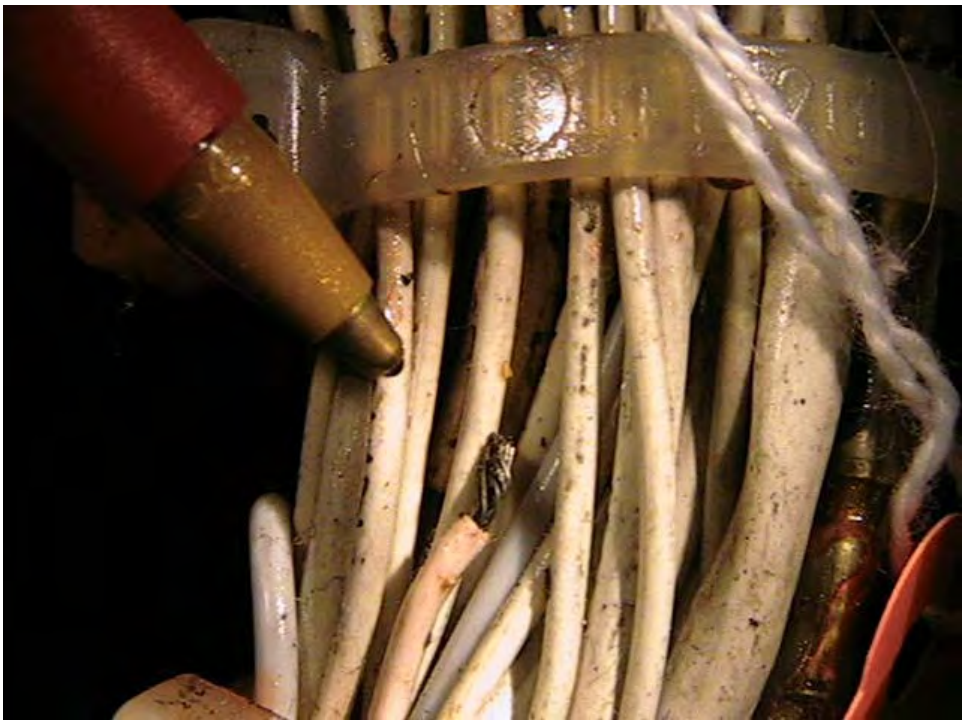

Figure 4-38. Improper Termination of Unused Wires

Figure 4-39. Exposed Inner Conductor

4.1.1.4.8 Tail Section.

Figure 4-40 is a photograph of the tail section of the Cessna 402C. The tail section showed some significant defects. Defects like heat damage and improper termination of wires were found in multiple places. Figures 4-41 and 4-42 are examples of these defects. As shown in figure 4-42, some unused wires were found to be improperly stowed. There were also defects like uninsulated soldered joints, as shown in figure 4-43.

Figure 4-40. Tail Section

Figure 4-41. Heat-Damaged Wire

Figure 4-42. Unused Wires Improperly Stowed, Tail Section

Figure 4-43. Uninsulated Soldered Joint

4.1.1.4.9 Right Wing.

This section had only a few defects such as chafing and fluid contamination, as shown in figures 4-44 and 4-45. Most wires were inaccessible during the general visual inspections and were further examined during the intrusive visual inspection. Some minor defects of twisted wires were also found but were not present in a significant number of wires.

Figure 4-44. Chafing Due to Rubbing of Wires on Structure

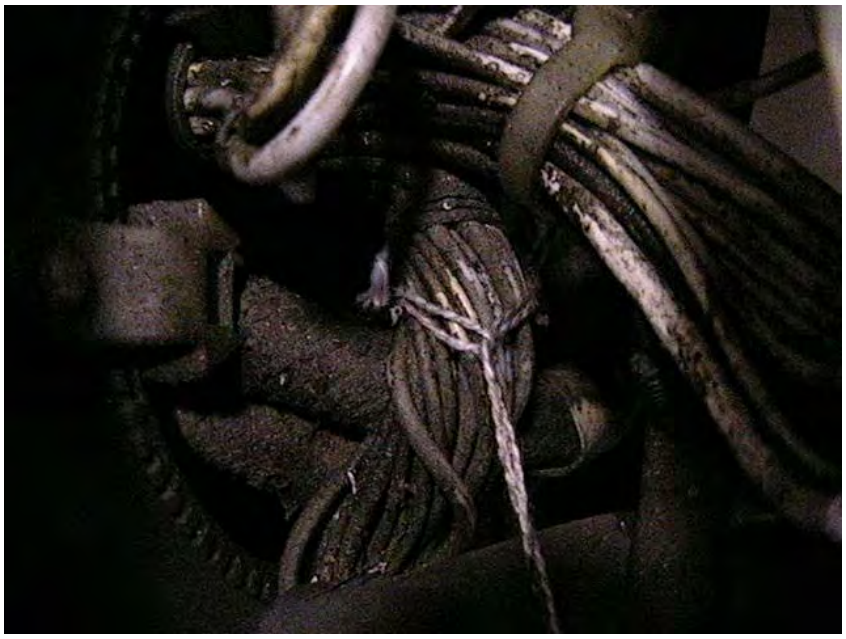

Figure 4-45. Fluid Contamination

4.1.1.4.10 Left Wing.

The left wing showed only a few defects. The defects observed were improperly terminated unused wires as well as chafing. Figures 4-46 and 4-47 are examples of these defects. As with the right wing, most wires were inaccessible during the general visual inspections.

Figure 4-46. Unused Wire Improperly Terminated

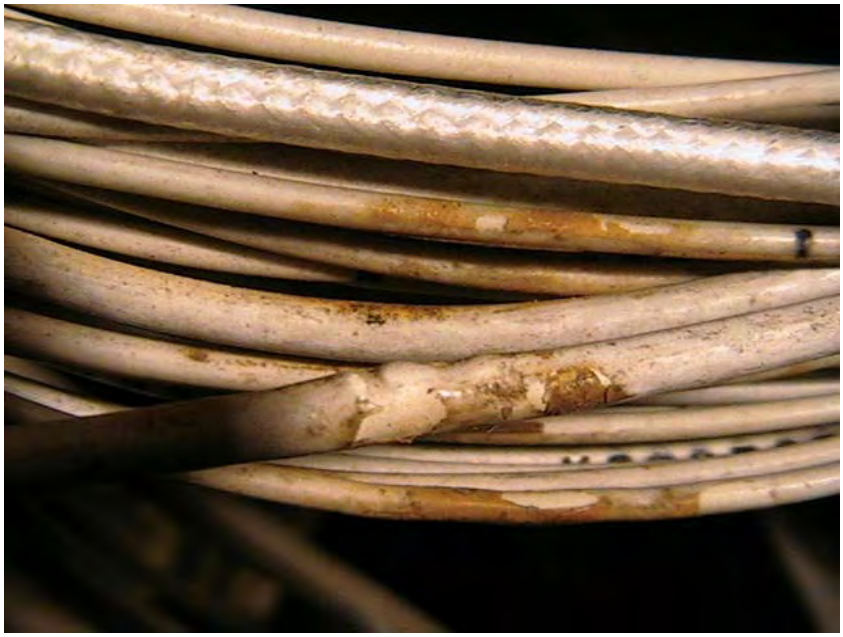

Figure 4-47. Chafing of Wires

4.1.1.4.11 Landing Gear.

The left as well as the right landing gear area only had fluid contaminated wires. Figure 4-48 shows a wire contaminated by chemical fluids.

Figure 4-48. Wires Contaminated With Chemical Fluids

4.1.1.4.12 Cockpit Floor.

The cockpit floor had a significant number of defects. Many defects related to chafing were found in this section. Figure 4-49 shows an inner conductor exposed due to cracked insulation. Figures 4-50 to 4-52 are examples of other defects.

Figure 4-49. Cracked Outer Insulation Exposing Inner Conductor

Figure 4-50. Cracked Outer Insulation, Cockpit Floor

Figure 4-51. Cracked Insulation

Figure 4-52. Missing Grommets

4.1.1.4.13 Instrument Panel.

Figures 4-53 and 4-54 show the instrument panel with and without the instrumentation, respectively. The instrument panel was found to have many defects. Some of these defects were chafing and unused, improperly stowed wires, as shown in figure 4-55. Figure 4-56 shows a wire with an exposed inner conductor. Some wires that were not in use were not properly terminated. At the end of the wires, no cap was provided, as shown in figure 4-57. Also, there were cases of wire bundles improperly riding on other bundles, as shown in figure 4-58. Figure 4-59 shows some wires clamped with an improper clamp size.

Figure 4-53. Instrument Panel Intact

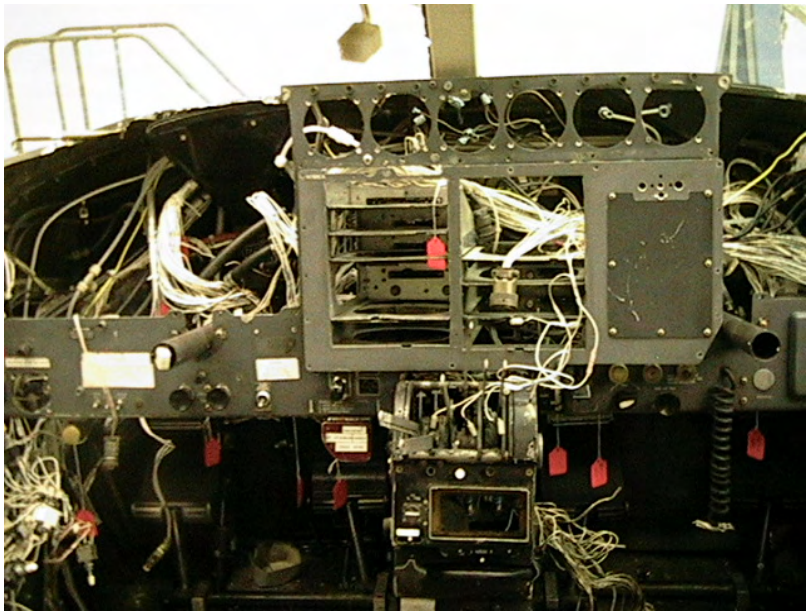

Figure 4-54. Instrument Panel Opened

Figure 4-55. Unused Wires Improperly Stowed, Instrument Panel

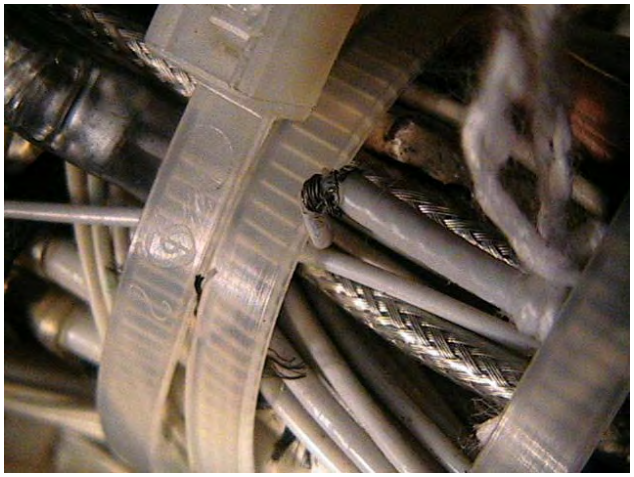

Figure 4-56. Exposed Inner Conductor, Instrument Panel

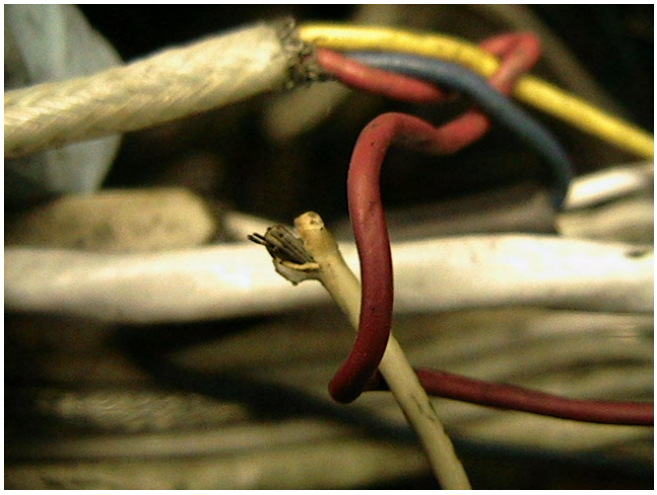

Figure 4-57. Improper Termination of Wire (No Cap)

Figure 4-58. Bundle of Wire Improperly Riding on Other Bundles

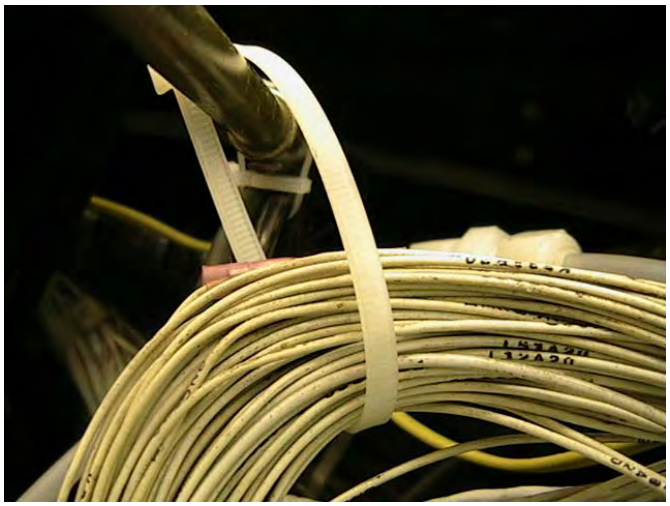

Figure 4-59. Improper Clamp Size

4.1.1.5 Analysis of Wiring Condition Defects.

Table 4-3 shows the results of the general visual inspections. Two hundred fifty-one wiring defects were found, with 179 being general wiring condition defects. Figure 4-60 shows that 89% of the 179 wiring condition findings were directly related to some chafing or rubbing condition on the wire. Figure 4-61 shows that 23% of the installation defects would lead directly to the rubbing or chafing wiring condition defect. Figure 4-62 shows, of the eight termination defects, over a third were corroded terminals, while 13% were broken or loose terminals and another 13% were improperly grounded. Figure 4-63 shows the location comparison of the defects. Half of all defects were found in the engine compartments.

Table 4-3. Defects Categorization

Type	S/N	Defect Description	Defect Code	Number of Defects
Wiring Conditions	1	Rubbing or chafing of outer insulation	01A	79
	2	Cutting through outer insulation	01B	23
	3	Exposed shield	01C	32
	4	Damaged shield	01D	7
	5	Chafing or cutting of inner insulation	01E	0
	6	Exposed inner conductor	01F	18
	7	Damaged inner conductor	01G	0
	8	Heat damage	01H	4
	9	Fluid/chemical/dust contamination	01J	4
	10	Corroded shield/conductors	01K	2
	11	Illegible label	01L	0
	12	Others	01X	10
Installations	13	Inadequate clearance to structure	02A	5
	14	Improper wire riding on other wire bundle	02B	1
	15	Improper bend radius (10 × wire bundle diameter)	02C	2
	16	Missing or deteriorated ties	02D	2
	17	Missing or deteriorated grommets	02E	6
	18	Improper clamp condition or size	02F	3
	19	Excessive slack or sag between clamps	02G	1
	20	Excessive strain on wires	02H	0
	21	Improper t or y breakout	02J	1
	22	Repaired wires	02K	5
	23	Improperly labeled	02L	0
	24	Unused wires improperly stowed	02M	5
	25	Improper termination of wire (no cap)	02N	19
	26	Others	02X	9
Terminations	27	Loose or broken terminals	03A	1
	28	Corroded terminals	03B	3
	29	Improper grounding condition	03C	1
	30	High bonding resistance	03D	0
	31	Others	03X	3
Connectors	32	Insert damage or deterioration	04A	0
	33	Contact arcing or fretting	04B	0
	34	Missing, damaged or loose back shells	04C	0
	35	Missing hardware	04D	1
	36	Others	04X	4
		Total number of findings		251

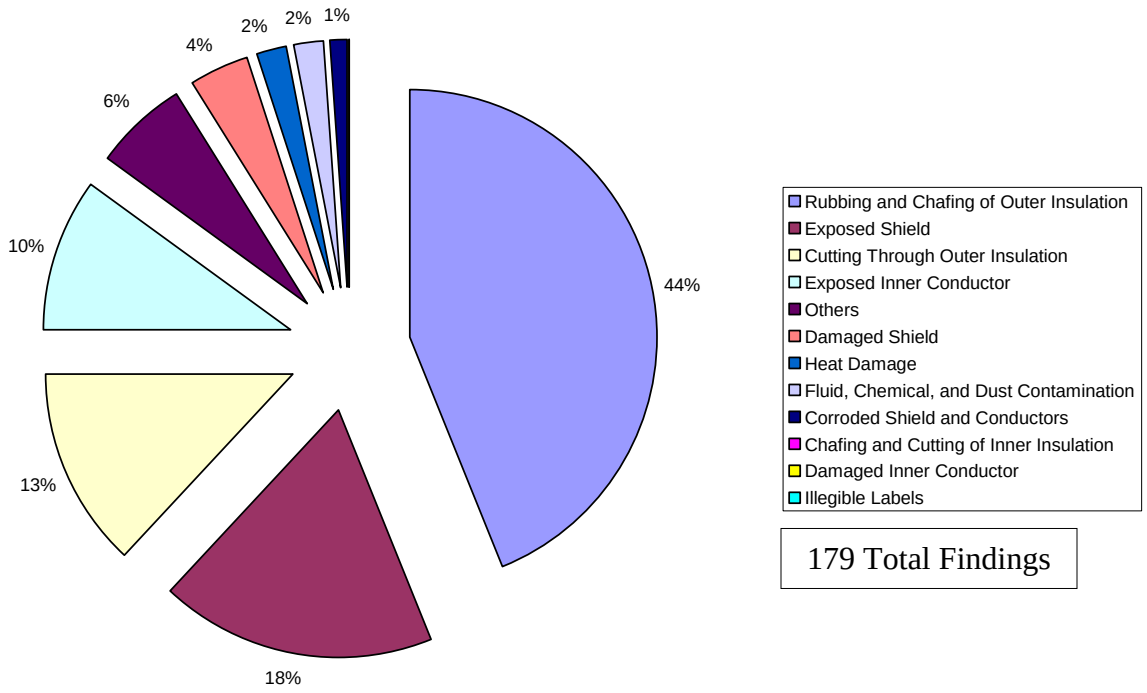

Figure 4-60. Wiring Condition Defect Distribution

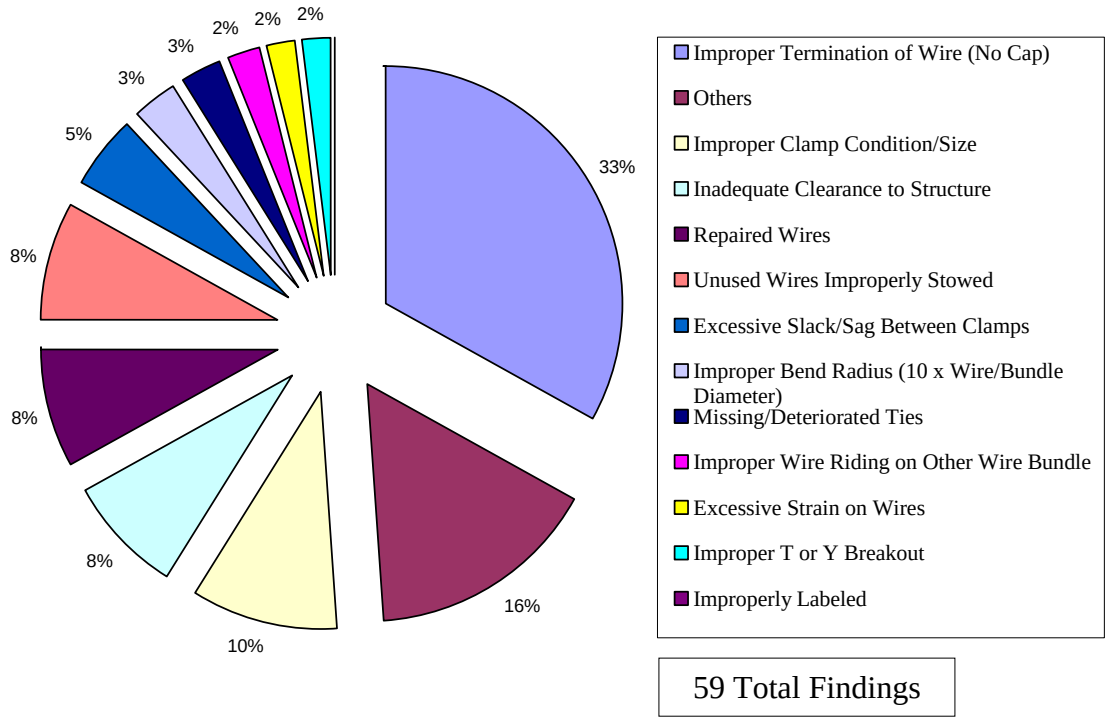

Figure 4-61. Installation Defect Distribution

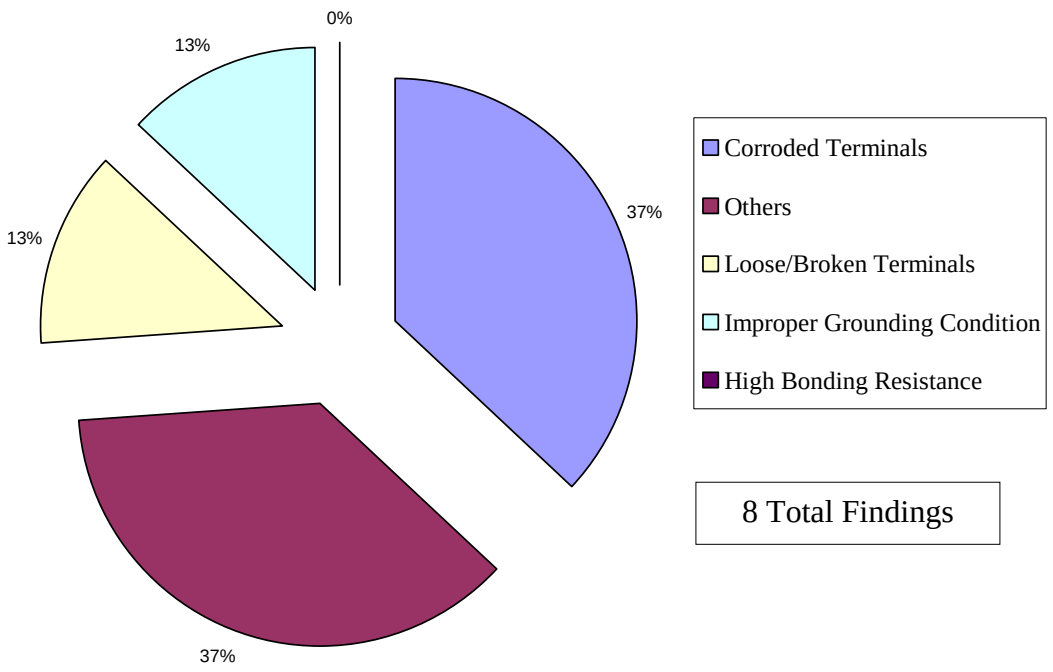

Figure 4-62. Termination Defects Distribution

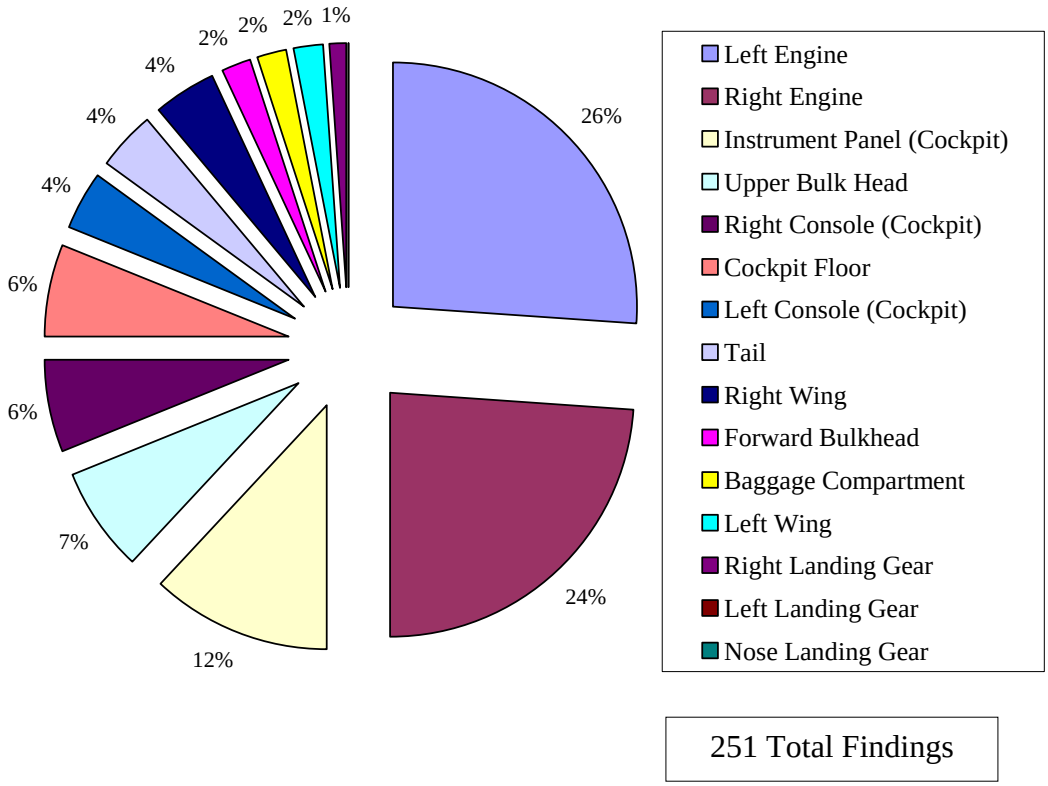

Figure 4-63. Zonewise Defect Distribution

4.1.2 In Situ Wiring Tests.

Two nondestructive tests were performed with the wires still in their service configuration in the airplane. The first of these tests is the bond resistance measurement test. This test is used to verify the electrical shield integrity of the wires and can be performed without demating the connectors. The bond resistance measurement test measures the electrical resistance of closed loops by induction of current at known voltages. The hard-fault detection test was also investigated for the viability of assessing wires on a commuter airplane. This test determines whether a wire has any hard faults such as open and short circuits. This test uses a hand-held fault location analyzer, manufactured by Eclypse International™, which uses the principles of time domain reflectometry and standing wave ratio for its operation. The instrument by itself is only able to provide open circuit and short circuit types and general locations. The raw reflectometry data, however, was useful in identifying wire degradation.

4.1.2.1 Bond Resistance Measurement Test.

The bond resistance measurement confirms the value of contact resistance between the airplane structure and the electrical ground. This measurement shows how well the airplane structure is connected to the airplane's electrical ground. The lower the value measured, the better the dissipation of the static charges accumulated. For finding the bond resistance, the resistance between different parts of the structure and the ground was measured. The observed results are shown in table 4-4.

Table 4-4. Bond Resistance Measurements

Measurement From Ground	Resistance Value in Ohms
Structure-right aileron	0.5
Structure-left aileron	0.4
Structure-right elevator middle	0.4
Structure-right elevator end	0.7
Structure-left elevator	0.7
Structure-rudder	0.3
Structure-nose landing gear, right	0.6
Structure-nose landing gear, left	0.5

4.1.2.2 Hard-Fault Detection Test.

This test determined whether a wire had any hard faults such as open or short circuits. The test used a hand-held fault location analyzer, manufactured by Eclypse International, which uses the principles of time domain reflectometry and standing wave ratio for its operation. Figure 4-64 shows the instrument. The instrument by itself was only able to provide open and short circuit conditions. The instrument also provided the type and general location of hard faults. However, using the raw reflectometry data, degradation was identified, as shown in figures 4-65 and 4-66. From evaluation of the experimental data, it was found that the frequency shift was a function of the location of degradation and the shift in the signal ratio was a function of the type of

degradation. Further analysis would be required to determine the exact degradation type and intensity.

Figure 4-64. Eclypse International Hand-Held Fault Location Analyzer

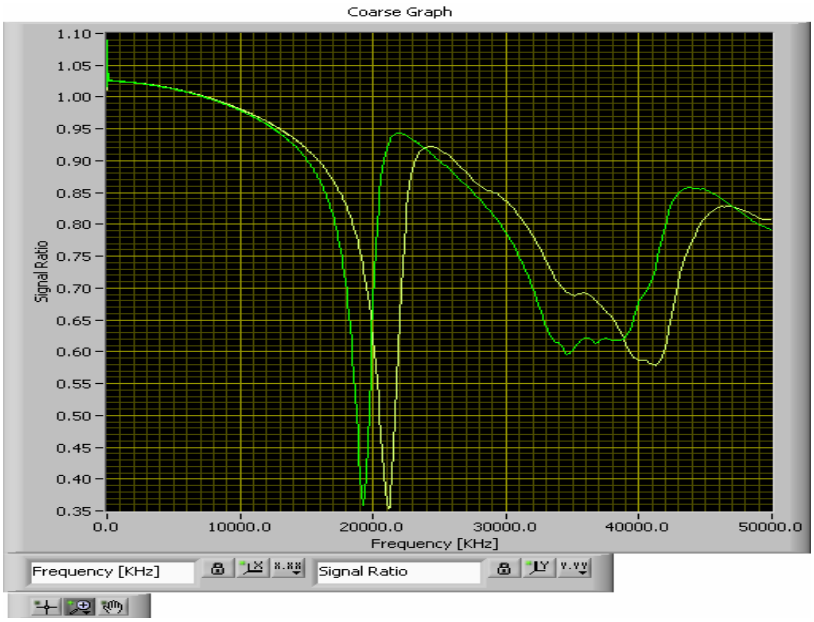

Figure 4-65. Open Wire Condition and the Same Wire With Added Chafing of Insulation

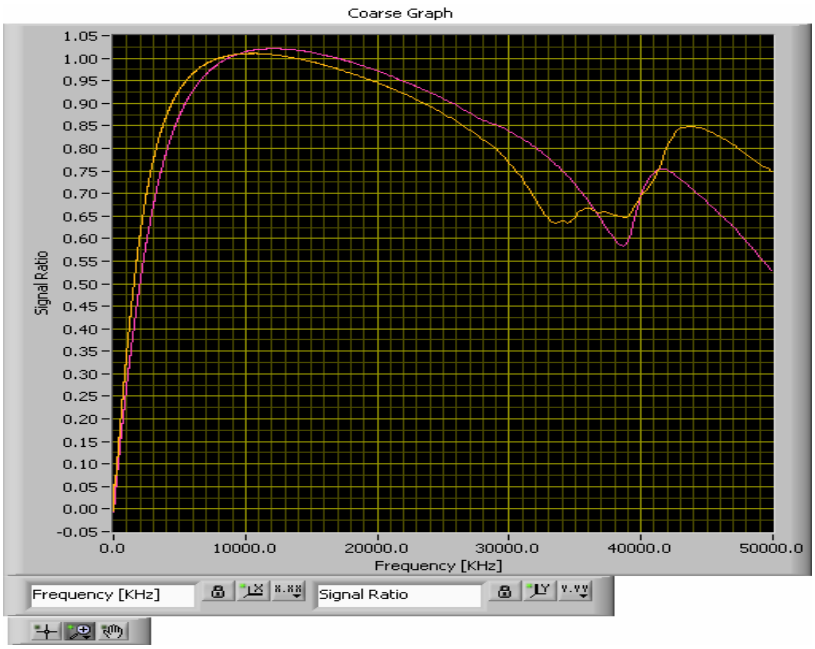

Figure 4-66. A Shorted Wire and the Same Wire With Added Chafing of Insulation

4.1.3 Laboratory Tests.

Laboratory tests were performed after the teardown of the airplane. During the teardown phase, all the wires were removed off of the airplane and were subjected to various tests as well as inspections.

In this section of the wiring tests, the following tests were performed.

- Intrusive Visual Inspection (IVI)
- Wiring Insulation Microscopic Inspection
- Insulation Resistance Test
- Circuit Breaker Testing
- Relay Inspection

4.1.3.1 Intrusive Visual Inspection.

The wires, which were inaccessible for simple visual inspection, were subjected to IVI. These tests were performed on selected segments of wire bundles after they were removed from the airplane. These segments were

- Cockpit floor
- Instrument panel
- Left wing
- Tail

After carefully performing the IVI, it was observed that many wires were contaminated by chemicals and dust. Some wires were found to have heat damage. A few wires, especially the ones that pass through the left wing area, were found to have chafing as well as exposed inner conductors. The IVI photographs are shown in figures 4-67 through 4-75.

Figure 4-67. Chemically Contaminated Wire Bundle

Figure 4-68. Exposed Inner Conductor, Location 1

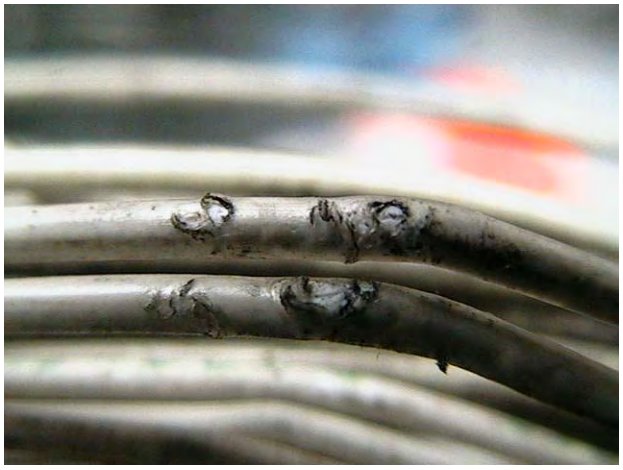

Figure 4-69. Chafing on Wires

Figure 4-70. Heat Damage, Location 1

Figure 4-71. Exposed Inner Conductor Due to Cutting of Insulation

Figure 4-72. Exposed Inner Conductor, Location 2

Figure 4-73. Exposed Shield

Figure 4-74. Outer Insulation Cut

Figure 4-75. Heat Damage, Location 2

Although general visual inspection (GVI) showed several defects in wiring conditions, IVI also provided enhanced information of wiring defects from the area that were inaccessible. Table 4-5 shows the increase in the defects found.

Table 4-5. Intrusive Visual Inspections Summary

Zone	Number of Wiring Defects Found by GVI	Number of Wiring Defects Found by IVI	Percent Increase in the Number of Wiring Defects Detected
Cockpit floor	9	6	66.67
Instrument panel	17	6	35.29
Left wing	2	12	600
Tail	4	4	100

4.1.3.2 Wiring Insulation Microscopic Inspection.

These tests were performed on selected segments of wire bundles after they had undergone IVI. Any wires that appeared to have some defect that was not visually clear on type or amount of degradation were subjected to microscopic inspection. Wire samples were chosen from different sections. Figures 4-76 through 4-85 are examples of the defects found.

Figure 4-76. Multiple Cuts

Figure 4-77. Heat Damage, Location 3

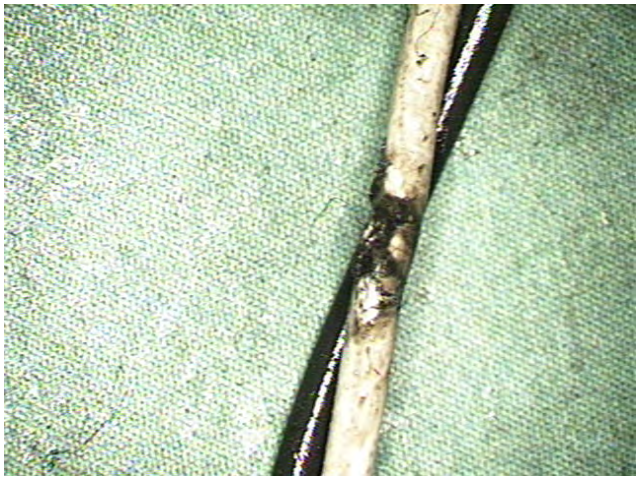

Figure 4-78. Chemical-Contaminated Corrosion

Figure 4-79. Example of Cracked Insulation

Figure 4-80. Exposed Inner Insulation

Figure 4-81. Cut Wire

Figure 4-82. Insulation Cracked and Exposed Shield

Figure 4-83. Exposed Inner Shield

Figure 4-84. Overheating Resulting in Exposed Inner Insulation

Figure 4-85. Cracked Outer Insulation

Microscopic inspection provided more information on the wire defects, which were otherwise visually not clear. Table 4-6 shows the additional information obtained.

Table 4-6. Microscopic Inspection Summary

Type of Wire Defect	Number of Instances Found
Exposed shield	11
Cracked insulation	5
Exposed inner conductor	4
Chemical corrosion	3
Heat damage	2
Exposed inner insulation	1

4.1.3.3 Insulation Resistance Measurement Test.

The Insulation Resistance Measurement test is used to determine the insulation resistance of a wire specimen. Insulation resistance is of interest in high-impedance circuits and as a measure of quality control. Changes in insulation resistance may indicate deterioration of other properties.

An insulated vessel, approximately eight gallon capacity, was filled with water containing 0.1% Triton-X-100, a wetting agent. In this experiment, the water bath serves as one electrode. A megohmmeter was used to measure the insulation resistance. All wire specimens were immersed to within 152 mm (6 in.) of the twisted ends in the water bath, which was maintained 73° ±9°F. Figure 4-86 illustrates the setup for the Insulation Resistance Measurement test.

Figure 4-86. Insulation Resistance Measurement Test Setup

The Insulation Resistance Measurement test procedure is defined in the following steps:

- Wire specimen should ideally be 8.3 m (26 ft) in length. For a distance of 25 mm (1 inch), the insulation of the wire specimen is removed and the ends are twisted together.
- The wire specimens were then immersed to within 152 mm (6 inches) of the twisted ends in the water bath, which was maintained at 23° ±5°C (73° ±9°F).
- Since a measuring apparatus was required that can measure at least 40,000 MΩ or as little as 12.5 pA (for current measurements), a megohmmeter was used. The megohmmeter was setup to provide 500 volt direct current (Vdc) with an electrification time of 60 seconds.
- An initial resistance measurement was performed between the conductor and the water bath for the purpose of detecting nontypical values.
- The wire specimens were then soaked in the water bath (containing 0.1% Triton-X as wetting agent) for 4 hours.
- After 4 hours of soaking, the resistance between the conductor and the water bath was remeasured.

- These measurements were performed again at 500 Vdc with an electrification time of 1 minute.

- The resistance measurements were tabulated and the insulation resistance of wire specimens was calculated according to the formula explained below.

In the test procedure described above, the wire specimen length and the measured resistance is tabulated. Insulation resistance is expressed in terms of Ω-1000 ft.

This is calculated as follows: $\Omega\text{-}1000\ \text{ft} = (R \times L)/1000$

Where,

R = measured resistance by the megohmmeter
L = length of the immersed wire specimen

Table 4-7 shows multiple wire specimens and their insulation resistance measurement readings. All wire specimens whose insulation resistance was more than 40 MΩ-1000 ft are indicated in the comments section as Passed.

Table 4-7. Insulation Resistance Measurement Readings

Wire Specimen	Length of Wire (ft)	Measured Resistance (GΩ)	Calculated Insulation Resistance (MΩ-1000 ft)	Comments
1	28.00	237.8	6658.4	Passed
2	26	273.00	7098.0	Passed
3	28	281.50	7882.0	Passed
4	27.6	411.00	11343.6	Passed
5	28	292.70	8195.6	Passed

Only a few wires were found to be 26 ft or more. All of the tested wires showed good insulation resistance values.

4.1.3.4 Circuit Breaker Testing.

Circuit breakers are specifically designed to protect airplane wiring. A circuit breaker will trip off when the current through it exceeds its rating, providing primary electrical protection. The functionality of each of the Cessna 402C circuit breakers was tested during the initial operational checks. The circuit breakers were then removed from the airplane and tested in the laboratory to verify current trip time specifications. Figures 4-87 and 4-88 show the circuit breaker panels tested.

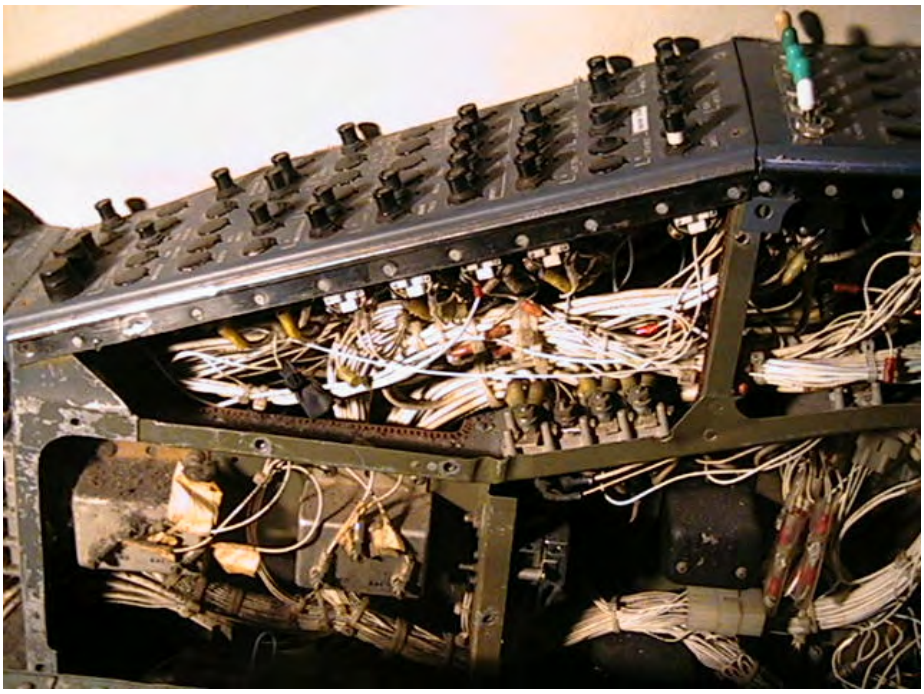

Figure 4-87. Circuit Breakers on Left Panel

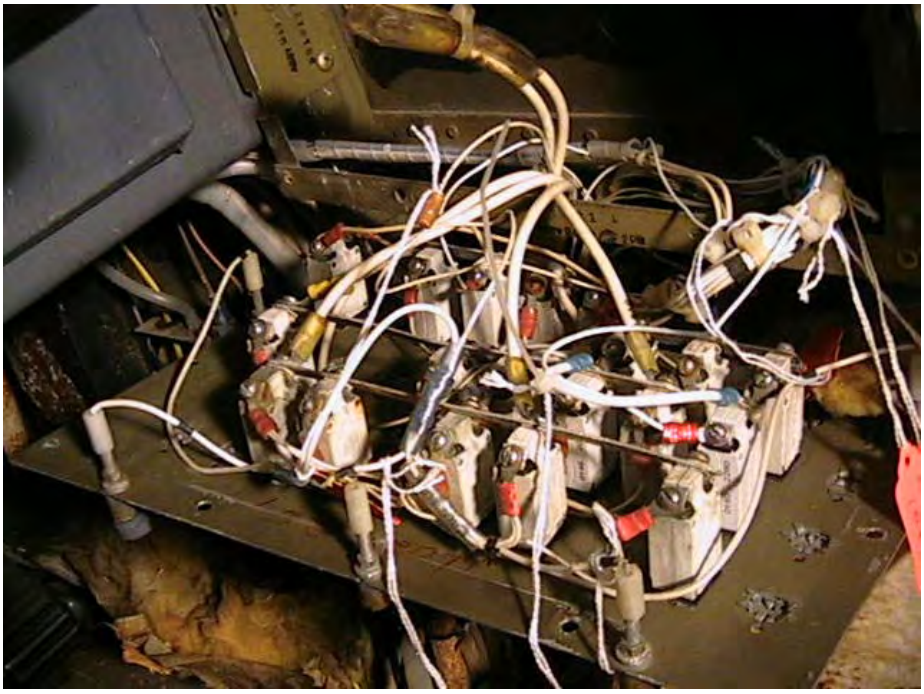

Figure 4-88. Circuit Breakers on Right Panel

The procedure for testing the circuit breakers is described in the following steps:

- The rating of the circuit breaker was noted per the wiring service manual [1].
- The rating of the circuit breaker that was actually present in the plane was also noted.
- Any discrepancies found between the actual existing circuit breaker and the wiring manual circuit breaker was noted.
- The circuit breaker was tested at two levels: 200% and 300% rating of the circuit breaker was calculated as per the circuit breaker rating.
- 200% rated current was passed through the circuit breaker and the time required for the breaker to trip off was recorded. The circuit breaker was then reset and allowed to cool.
- 300% rated current was then passed through the circuit breaker and the time required for the breaker to trip off was recorded.
- All the measurements were tabulated and compared with the circuit breaker specifications.

Table 4-8 shows the results of the current breaker tests. These circuit breakers were manufactured by Klixon, a Texas Instruments company. As per the specification sheet from the manufacturer, at 200% of the rated current, the circuit breaker should trip within 35 seconds for the 7277 model circuit breaker and within 20 seconds for 7274 model. At 300% of the rated current, the circuit breaker should trip within 6 seconds for the 7277 model circuit breaker and within 3 seconds for 7274 model.

Table 4-8. Circuit Breaker Test Results

No.	Model No.	Specified Current	Applied Current 200% and 300%	Trip Time (secs)	Remarks
1	7277-5-5	5A	10A, 15A	9, 5	Passed
2	7277-5-10	10A	20A, 30A	6, 2	Passed
3	7277-5-5	5A	10A, 15A	13, 5	Passed
4	7277-5-5	5A	10A, 15A	19, 3	Passed
5	7277-5-5	5A	10A, 15A	9, 3	Passed
6	7277-5-7.5	7.5A	15A, 22.5A	7, 4	Passed
7	7277-5-7.5	7.5A	15A, 22.5A	8, 3	Passed
8	7277-2-1	1A	2A, 3A	4, 4	Passed
9	7277-5-5	5A	10A, 15A	10, 7	Passed
10	7277-2-5	5A	10A, 15A	--,--	Open circuit
11	7277-5-5	5A	10A, 15A	--,--	Open circuit
12	7277-5-5	5A	10A, 15A	11, 3	Passed
13	7277-5-5	5A	10A, 15A	9, 5	Passed

Table 4-8. Circuit Breaker Test Results (Continued)

No.	Model No.	Specified Current	Applied Current 200% and 300%	Trip Time (secs)	Remarks
14	7277-5-5	5A	10A, 15A	8, 6	Passed
15	7277-5-5	5A	10A, 15A	6, 5	Passed
16	7277-5-5	5A	10A, 15A	6, 3	Passed
17	7277-5-5	5A	10A, 15A	8, 2	Passed
18	7277-5-15	15A	30A, 45A	3, 1	Passed
19	7277-5-10	10A	20A, 30A	12, 3	Passed
20	S2899L1	10A	20A, 30A	4, 2	Passed
21	7277-5-5	5A	10A, 15A	9, 4	Passed
22	7277-5-5	5A	10A, 15A	18, 4	Passed
23	7277-5-5	5A	10A, 15A	11, 7	Passed
24	7277-5-5	5A	10A, 15A	--, --	Open circuit
25	7277-5-5	5A	10A, 15A	--, --	Open circuit
26	7277-5-5	5A	10A, 15A	10, 2	Passed
27	7277-5-5	5A	10A, 15A	9, 3	Passed
28	7277-5-7.5	7.5	15, 22.5	21, 5	Passed
29	7277-5-7.5	7.5	15, 22.5	10, 4	Passed
30	7277-2-2	2A	4A, 6A	17, 4	Passed
31	7277-5-3	3A	6A, 9A	11, 3	Passed
32	7277-2-2	2A	4A, 6A	16, 4	Passed
33	7277-5-5	5A	10A, 15A	7, 2	Passed
34	7277-5-3	3A	6A, 9A	9, 3	Passed
35	7277-5-1	1A	2A, 3A	6, 2	Passed
36	7277-5-5	5A	10A, 15A	7, 2	Passed
37	7277-5-3	3A	6A, 9A	9, 3	Passed
38	7277-5-1	1A	2A, 3A	19, 2	Passed
39	7277-2-5	5A	10A, 15A	13, 5	Passed
40	7277-5-10	10A	20A, 30A	11, 6	Passed
41	7277-5-1	1A	2A, 3A	>240, >180	Failed for 200% and 300%
42	7277-5-1	1A	2A, 3A	4, 2	Passed
43	7277-5-1	1A	2A, 3A	6, 1	Passed
44	7274-4-1	1A	2A, 3A	180, 11	Failed for 200% and 300%
45	7277-2-5	5A	10A, 15A	12, 2	Passed
46	7277-5-2	2A	4A, 6A	11, 3	Passed

Red = Failed

The total number of breakers tested was 46. As shown in table 4-8, the total number of breakers that had open circuit fault was four (8.69%), which does not provide a safety concern. The total number of breakers that did not meet trip time specifications was two (4.4%), as indicated in red. It should be noted that before this testing, all circuit breakers were cycled during the operational checks of the airplane. Further mechanical cycling of the two breakers that did not trip in the specified time provided little effect on the trip times.

4.1.3.5 Relay Inspection.

Four relays were opened for inspection and observed under a microscope. All relays were found to have normal pitting, as shown in figures 4-89 through 4-91.

Figure 4-89. Relay Inspection

Figure 4-90. Pitting Found on Relay 1

Figure 4-91. Pitting Found on Relay 2

4.2 DESTRUCTIVE LABORATORY WIRING TESTS.

This phase was performed after the teardown of the airplane in which of all the wires had been removed and separated for laboratory testing. The destructive laboratory tests of the wires were performed on the same selected wire bundle on which nondestructive testing was performed. These tests included

- Wet DWV test
- Mandrel bend/wrap back test

4.2.1 Wet DWV Test.

The wet DWV test provides a method to determine insulation integrity following any type of performance test. The DWV test was performed on the same wire segments used in the insulation resistance measurement test. DWV test is also used to determine whether exposure to environmental test conditions has reduced the breakdown strength below some prescribed level.

The test specimen consists of an insulated wire of the length required for environmental exposure. The insulation was removed for a distance of 25 mm at each end of the wire before the wires were twisted together. All specimens were then subjected to insulation resistance measurement test. Any specimen whose insulation resistance was less than 1 MΩ was discarded and was replaced with another specimen.

The DWV procedure followed is explained below.

- The test specimen was immersed to within 51 mm (2 inches) of the twisted ends in the water (containing 5% NaCl) solution, as shown in figure 4-92.

- The resistance between the conductor and the water solution was measured at 500 (±10%) Vdc to detect gross flaws. The apparatus (megohmmeter) described in the insulation resistance measurements was used for these measurements.

- All specimens that passed the insulation resistance test were subjected to 4 hours of soaking in the water bath.

- After 4 hours, a high potentiometer (HiPOT), shown in figure 4-93, was used (which was setup to ramp up in 1 minute up to 2500 volt alternating current (Vac) and then remain at that level for 300 seconds).

- The current rating of the HiPOT was kept at 20 mA to detect the flaw current in case it goes high. Although the rating renders any current above 10 mA as a failure, it was intentionally kept high to spot the exact amount of current flow more than 10 mA.

- If the wire was found faulty, the HiPOT drew current in excess and then shuts off, automatically indicating a failure in the wire, as shown in figure 4-94.

- The voltage and the time of the failure were recorded and tabulated.

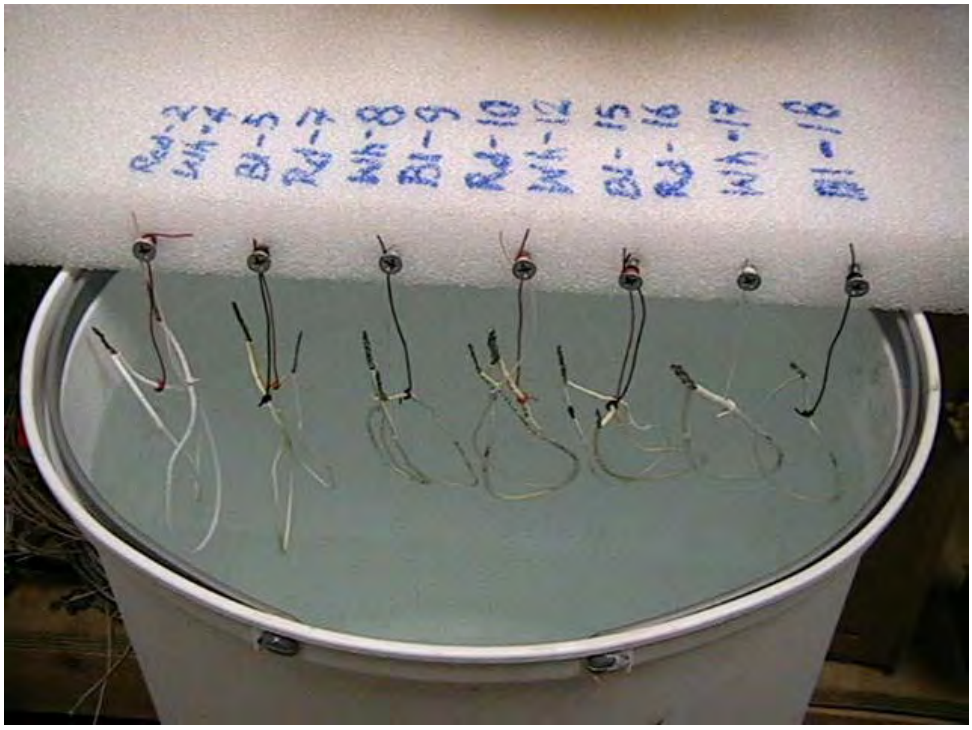

Figure 4-92. Wire Specimen Immersed to Within 2 Inches of Twisted Ends

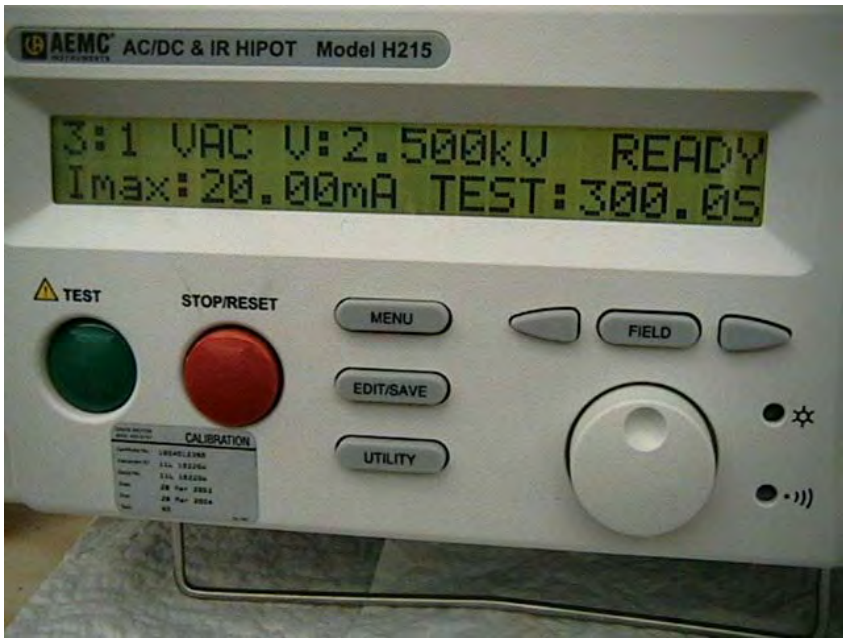

Figure 4-93. HiPOT Set to Ramp to 2500 Vac in 1 Minute and Electrification Time of 300 Seconds

Figure 4-94. HiPOT Indicating a Pass of a Specimen Tested

Table 4-9 lists the recorded readings of the DWV test.

Table 4-9. Wet DWV Test Results

Wire Specimen	Length of Wire (ft)	Calculated Insulation Resistance (MΩ-1000 ft)	DWV (measured current in mA)	Comments
1	28	6,658.4	0.14	Passed
2	26	7,098.0	0.16	Passed
3	28	7,882.0	0.14	Passed
4	27.6	11,343.6	0.15	Passed
5	28	8,195.6	0.15	Passed

The wet DWV test was performed successfully on the wire specimen. The test results indicated 100% of specimens passed the test. But since the total number of specimens (26 ft or more in length) was only five, the test cannot be considered a reliable test.

4.2.2 Mandrel Bend/Wrap Back Test.

The mandrel bend/wrap back test is used to determine whether a specimen will crack when wrapped upon itself or around a mandrel. This test has been used for process control purposes to determine the degree of sintering of the insulation.

Twelve wire specimens were used for the wrap back test. All wire sizes were 10 through 30 gage. The specimen was bent back on itself at the midportion of a radius not less than the radius of the wire. One end of the specimen was wound tightly around the other end as a mandrel for a total of four close turns, as shown in figure 4-95. All specimens were placed in a 203° ±3.6°F temperature oven for 24 hours, as shown in figure 4-96.

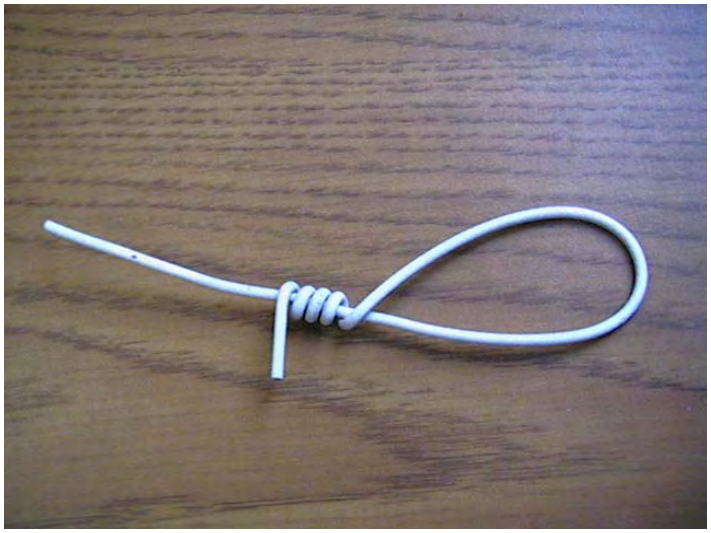

Figure 4-95. Wrap Back Test Specimen

Figure 4-96. Multiple Wire Specimen Placed in Temperature Chamber

After removal from the oven, the specimens were kept in a desiccator to cool. The desiccator absorbs the humidity from the atmosphere, allowing drier cooling conditions. Figure 4-97 shows a wire specimen placed in a desiccator. After 2 hours of cooling, the specimen was examined visually, without the aid of magnification, for cracks. The entire specimen, shown in figure 4-98, with and without cracks, was subjected to the wet DWV test. The procedures for the wet DWV test remains the same as described above.

Figure 4-97. Desiccator Cooling the Wire Specimens in a Dry Atmospheric Condition

Figure 4-98. Wire Specimen Showing Cracks After Unwrapping

Table 4-10 lists the results of the wrap back test performed on the wire specimens.

Table 4-10. Wrap Back Test Results

Wire Specimen Nos.	Visual Inspection After Cooling	Insulation Resistance	Wet DWV Test Results
1	No cracks	> 2 TΩ	Passed (I_{max}=0.14mA)
2	No cracks	> 2 TΩ	Passed (I_{max}=0.14mA)
3	No cracks	> 2 TΩ	Passed (I_{max}=0.16mA)
4	No cracks	1.328 TΩ	Passed (I_{max}=0.18mA)
5	Slight cracks	< 40 GΩ	Failed
6	Slight cracks	175 GΩ	Passed (I_{max}=0.21mA)
7	Major cracks	3.255 MΩ	Failed
8	Slight crack	> 2 TΩ	Passed (I_{max}=0.18mA)
9	No cracks	> 2 TΩ	Passed (I_{max}=0.16mA)
10	No cracks	> 2 TΩ	Passed (I_{max}=0.19mA)
11	No cracks	> 2 TΩ	Passed (I_{max}=0.15mA)
12	No cracks	> 2 TΩ	Passed (I_{max}=0.18mA)

The following are the results from the 12 specimens selected for the test:

- Three specimens had slight cracks
- One specimen had major cracks
- Eight specimens had no cracks

Although 33.33% wires suffered cracks from the specimens taken, only 16.67% failed the test. The test can give a different result if the number of specimens changes.

5. SUMMARY.

To determine if potential continuing airworthiness problems exist for thesmall airplane fleet as a function of the aging process, the FAA established a research program to conduct a destructive evaluation on two aged airplanes (both Cessna 402 models) used in the commuter service. The intent of the program is to provide insight into the condition of a typical aged airplane and to see if a correlation exists between its maintenance history and current condition from a safety of flight perspective. This document provides findings in a summary report on the teardown evaluation of a 1979 Cessna 402C model airplane in support of the research program. The results provide information for use in future investigations into the agedsmall airplane fleet and to determine if additional research is required to address specific problems observed (if any). Specific observations are made regarding findings discovered during the teardown evaluation on the particular airplane selected.

The destructive evaluation of the commuter-class airplane was separated into three main tasks: (1) inspection of the airframe and airplane systems, (2) teardown examination of the airframe and airplane systems, and (3) assessment of the airplane wiring. In the inspection phase, three subtasks were performed: a survey of the airplane maintenance records, visual inspection of the airframe and airplane systems, and supplemental airframe inspections. The teardown examination involved disassembly of the airframe and major airplane sections, inspection of airplane systems' components, inspections of primary airplane structure using alternative NDI techniques, and microscopic examination of critical structural areas. As part of the destructive evaluation, inspections and testing were also performed on the airplane wiring to assess the condition and degradation of electrical wiring in small airplanes and to evaluate maintenance procedures.

5.1 SUMMARY OF INSPECTION PHASE.

During the inspection phase, the survey of the airplane maintenance records provided information on the airplane maintenance history for correlation of maintenance practices to airplane condition. The visual inspection of the airframe and airplane systems along with the supplemental airframe inspections determined the condition of the airplane based on normal maintenance activity.

5.1.1 Maintenance Record Review.

The second airplane selected for destructive evaluation was a 1979 Cessna 402C model (tail number N780EA). This airplane was registered under four different tail numbers and was operated by five charter services (Provincetown Boston Airlines, Gulfstream Airlines, Air Nevada Airlines, Eagle Canyon Airlines, and Hyannis Air Service). Primarily used for commuter service along the Eastern North American coast, flying in and around the Cape Cod, Florida Keys, and Caribbean areas, the airplane accumulated a total of 25,546.6 hours. The service bulletins performed on the airplane that were of concern included MEB85-3 (Supplemental Engine Mount Inspections), MEB99-3 (Inspection of Lower Spar), and MEB99-7-10-13 (Installation and Inspection of Stainless Steel Engine Beams). The ADs of most concern included AD 81-11-05 (Engine Mount Beams), AD 97-26-16 (Engine Mount Beams), AD 99-11-13 (Wing Spars), and AD 2000-23-01 (Wing Spars). The major repairs and alterations that

were of main concern included a rudder damage repair performed in September 1986, repair to left-hand wing leading edge performed in May 1991, repair to nose area performed in May 1991, and repair of left-hand forward upper stub wing spar web performed in October 1994.

5.1.2 Visual Inspections.

The visual airframe inspections were performed with the intent of finding every detectable flaw on the airplane, which led to a large number of documented flaws. The results of these inspections were reviewed by licensed airframe mechanics to determine which findings were noteworthy. Most of these flaws were deemed minor, meaning that no further maintenance action was required. With an aged airplane, flaws such as minor cracks, scratches, dents, paint chips, and slight corrosion were to be expected and posed no immediate threat to the safety of the airplane. These flaws were recorded, but were not determined to be serious. In addition to dents and areas of missing paint, slight to moderate corrosion was noted on a majority of the screws of the airplane. Also, it was noted that some of the disposable parts such as seals and hoses were due to be replaced.

Sixty-seven different systems visual inspections were performed with only two discrepancies found—a leak found in a hydraulic flow pressure switch and an improper repair of the right-hand engine exhaust pipe. Of the 114 different visual airframe inspections performed, only one area of the airframe was determined to need some corrective maintenance. When maintenance technicians from Cape Air removed an antenna from the vertical stabilizer, the skin had a significant area of corrosion. The antenna is not removed as part of any inspection, therefore, the area of corrosion would not have been found during any of the prescribed visual or supplemental inspections. At the conclusion of the airframe visual inspections, 357 total findings were documented with a majority of these findings being corrosion related. Only three findings were deemed noteworthy by certified airframe inspectors.

5.1.3 Supplemental Inspections.

After completing the visual inspections, supplemental NDIs were performed on the Cessna 402C airplane as prescribed by the SID. These inspections consisted of visual, eddy-current, liquid penetrant, magnetic particle, and ultrasonic test inspection methods. Nineteen visual test inspections were performed by certified Cessna and Cape Air airframe inspectors. Twenty-eight additional supplemental inspections using the other four test methods were performed independently by three different NDI inspectors: a Cessna Level III NDI Examiner, an Aging Airplane Level II NDI Inspector, and an Aging Airplane Level I NDI Operator.

The following damage was identified in the visual test inspections:

- Paint scratches and corrosion in the rudder structure
- Skin crack in an engine beam
- Corrosion and damaged holes due to removal in several upper wing to carry-through attachment fittings
- Corroded fittings and missing paint on the main/nose gear retraction system

The bolthole eddy-current inspections resulted in finding nine well-defined indications on the following structure:

- Horizontal stabilizer upper spar cap skin cracks
- Horizontal stabilizer forward spar web hole out of round
- A wing attach fitting crack
- Bolthole cracks in an angle on the outboard right stub wing
- Left wing lower aft auxiliary spar cap skin cracks

Surface eddy-current inspections resulted in finding seven well-defined crack indications on the right wing outboard engine beam and left wing front spar lower cap.

Only a few fluorescent liquid penetrant, magnetic particle, and ultrasonic inspections were required by the SID in comparison to eddy-current inspections called out on the Cessna 402C airplane. Fluorescent liquid penetrant inspections resulted in finding a crack on a support bracket for the elevator hinge. No findings were discovered during the magnetic particle inspections on landing gear components. Tap testing was used to check bond integrity of upper wing skin due to the unavailability of the highly specialized Bond Master Ultrasonic testing. Tap testing resulted in finding one disbonded area in the left wing upper trailing edge at WS 211.

5.2 SUMMARY OF TEARDOWN EXAMINATION PHASE.

The teardown examination involved disassembly of the airframe and major airplane sections, inspection of airplane systems' components, assessment of primary airplane structure with alternative NDI techniques, and microscopic examination of critical structural areas. All airplane systems' components and wiring were removed during disassembly, and the disassembly provided full access to all critical structural areas on the airplane. Inspection of the airplane systems components assisted in determining if any aging effects were related to the airplane systems. The alternative NDI was performed on the airplane prior to disassembly to assess the primary airplane structure. The microscopic examination of critical structural areas provided verification and detailed quantification of the extent of damage found during supplemental inspection, alternative NDI, and disassembly of the entire airframe.

5.2.1 Inspection of Systems' Components.

The systems' components inspections were accomplished to identify areas where mechanical wear or corrosion had affected either the operation of actuators, linkages, and cables, or the ability of hydraulic systems to sustain pressurization. No additional findings were discovered on the systems' components during the teardown examination over the exhaust pipe repair and leaking hydraulic flow pressure switch found during the visual systems' components inspections. A leak test was performed on all oxygen, fuel, and vent lines by pressuring the lines and using soapy water to identify leaks. Five cabin vent lines were found to have leaks during the test, and an additional vent line was found to be deeply pitted upon visual inspection.

5.2.2 Structural Assessment Using Alternative NDI Techniques.

During the teardown examination phase, several alternative NDI techniques were used to augment the SID inspections to assess the primary airplane structure prior to disassembly. The three eddy-current techniques selected for the assessment included MOI technique, spot probe corrosion detection technique, and the sliding probe subsurface crack detection technique. The NIAR team performed these inspections on the wing spars, fuselage channels, and horizontal and vertical stabilizer spars.

During inspections with alternative NDI techniques, the following indications were identified:

- 8 crack indications and 34 corrosion indications on the left wing
- 13 crack indications and 22 corrosion indications on the right wing
- 2 crack indications and 9 corrosion indications on the left side fuselage channel
- 1 crack indication and 10 corrosion indications on the right side fuselage channel
- 9 crack indications and 13 corrosion indications on the horizontal stabilizer
- 2 crack indications and 14 corrosion indications on the vertical stabilizer

Areas with alternative NDI indications were examined microscopically, and only a limited number of the alternative NDI indications were verified through the microscopic examination.

5.2.3 Microscopic Examination.

Microscopic examinations were conducted on suspect areas from all inspections, on defects found during disassembly, and on critical structural details to locate and characterize cracks and areas of corrosion. The following areas had at least one or more defects: the stub wing attach fittings, wing attach fittings, front and rear spars of the wings, engine beam assemblies, carry-through beams and webs, front and rear spars of the horizontal stabilizer, front and rear spars of the vertical stabilizer, and fuselage channels.

Seven of the eight stub wing attach fittings were found to have corrosion. In general, the corrosion on the aft fittings was relatively light, but the forward fittings had much more corrosion on them, primarily at the attach points.

All of the wing attach fittings had corrosion in several areas. The most significant corrosion was located around the attach points, but slight corrosion was found on different areas of the fittings. Several of the fastener holes had areas of metal separations due to mechanical damage while removing the fasteners.

Corrosion was found on the wings in multiple areas, with both front and rear spars having the most areas of corrosion. On the whole, the left wing rear spar tended to be the most corroded, with areas up to 25% corroded. The remainder of the spars had scattered areas of 0%-10% corrosion, with the outboard sections of the rear spars having the most corrosion in general. Several areas of the wing spars looked as if they had not been anodized, which could be a cause for the severe corrosion. Slight corrosion was observed on the auxiliary spars, but it was loosely scattered. In total, 50 wing parts were found to have some type of defect.

The engine beam assemblies had a total of 25 cracks, and several areas of corrosion. This corrosion was slight, but some of the cracks were deemed potentially unsafe. All of the cracks were caused by fatigue.

The carry-through beams had some areas of mostly light surface corrosion with just a few areas of slightly deeper corrosion. The carry-through webs had a total of 43 cracks. Two cracks were also found on the left stub wing outboard rib where a cable pulley was attached. The cracks found on the rib were caused by fatigue. On the right stub wing, a bracket that was found cracked during the SID inspection was determined to be caused by fatigue.

The front and rear spars of the horizontal stabilizer, as well as the elevator attach fittings, were inspected. One crack was found on a bracket supporting the elevator attach fitting that was caused by fatigue. Light corrosion was found scattered on the front and rear spars of the horizontal stabilizer.

Both the front and rear spars on the vertical stabilizer, as well as the stabilizer mount, were inspected. No cracks were found. Only slight corrosion was found scattered on the spars. Corrosion was discovered on the vertical stabilizer left side skin under the antenna at water line 164 with 25% skin thickness loss.

Both fuselage channels were inspected with only the right side having light surface corrosion in several areas.

5.3 SUMMARY OF WIRING ASSESSMENT.

As part of the airplane destructive evaluation, electrical wiring inspections and testing were performed to assess the condition and degradation of electrical wiring in small airplanes and to evaluate maintenance procedures. The wiring inspections and tests were mainly divided into two categories: nondestructive and destructive. The nondestructive inspections and testing were comprised of general visual inspection, in situ wiring, and laboratory tests. The destructive testing was comprised of DWV tests and mandrel/wrap back tests.

5.3.1 Nondestructive Inspection and Testing.

The purpose of performing the general visual inspections on the wiring systems of the Cessna 402C airplane was to check the conditions of the wires for any defects or flaws that could be hazardous to an airplane in flight. Visual inspections revealed extensive information about the wiring condition. Based on the data obtained from visual observations, it could be concluded that wires in general had issues related to aging. The most dominant issues found were chafing, rubbing, cutting, exposed shield, exposed inner conductor, cutting through outer insulation, improper terminations of end terminals, improper termination of wires (no cap), unused wires improperly stowed, corroded terminals, and several others. Areas such as the right engine, left engine, and instrument panel displayed the most number of findings. Looking at the described flaws, it can be inferred that the issue with the wires were less of aging and more on maintenance, especially with the wires in the engine compartment.

A bond resistance measurement test and a hard fault detection test were performed on the airplane prior to conducting laboratory tests. The bond resistance measurement showed how well the airplane structure was electrically grounded, to demonstrate the capability of the airplane to discharge static that is generated during flight. The lower the value measured, the better the dissipation of the static charges accumulated. The hard-fault detection test determined whether a wire had any hard faults like open or short circuit. The test used a hand-held fault location analyzer, which uses the principle of time domain reflectometry and standing wave ratio for its operation.

Laboratory tests were performed after the teardown of the airplane. During the teardown phase, all the wires were removed off of the airplane and were subjected to various tests as well as inspections. The laboratory tests consisted of the following:

- Intrusive visual inspection
- Wiring insulation microscopic inspection
- Insulation resistance
- Circuit breaker
- Relay inspection

All of the flaws found in the general visual inspection were very conspicuous, and the intrusive visual inspection as well as the microscopic inspection confirmed these results. Intrusive visual inspection data provided more information of the wiring condition of the specific location inspected. The insulation resistance test was used to determine the insulation resistance of a finished wire specimen. Insulation resistance is of interest in high impedance circuits and as a measure of quality control. Since circuit breakers are designed to limit the current flow through the wires in different sections of the airplane, they were tested for various current ratings, e.g., 135%, 200%, and 300%. A total of 46 breakers were tested, and 6 had some defect, either failing the test for current rating or having an open circuit. Four relays were opened for inspection and all were found to have normal pitting. Among all the laboratory tests, the circuit breaker test revealed the most important part of the aging issues. Thirteen percent of the circuit breakers had defects.

5.3.2 Destructive Testing.

Two destructive laboratory tests were performed on the wires. These tests were:

- Wet DWV
- Mandrel Bend/Wrap Back

The DWV test provided a method to determine insulation integrity following any type of performance test. This test was performed soon after the insulation resistance measurement test. The test was used to determine whether exposure to environmental test conditions had reduced the breakdown strength of the wires below some prescribed level. The mandrel bend/wrap back test was used to determine whether a wire specimen would crack when wrapped around itself or around a mandrel. This test was used to determine the degree of sintering of wire insulations.

The destructive laboratory tests also demonstrated few issues with wires with respect to aging airplanes. Since only a few wires were 26 feet or more in length, only a few wires could be reliably tested for DWV, and all these wires did pass the test successfully. Only 16.67% of the wires failed the mandrel bend/wrap back test, which indicated that the wires generally had good quality insulation.

6. REFERENCES.

1. "Cessna 402C Maintenance Manual," Cessna Aircraft Company, Wichita, Kansas.

2. "Cessna 402C Supplemental Inspection Document," Cessna Aircraft Company, Wichita, Kansas.

3. http://www.staveleyndt.com/help/fixedslideprobes.pdf

4. "Cessna 402C Illustrated Parts Breakdown," Cessna Aircraft Company, Wichita, Kansas.