DOT/FAA/AR-09/36

Air Traffic Organization
NextGen & Operations Planning
Office of Research and
Technology Development
Washington, DC 20591

14 CFR Part 135 Certificate Holder Functional Model

October 2009

Final Report

This document is available to the U.S. public through the National Technical Information Service (NTIS), Springfield, Virginia 22161.

U.S. Department of Transportation
Federal Aviation Administration

NOTICE

This document is disseminated under the sponsorship of the U.S. Department of Transportation in the interest of information exchange. The United States Government assumes no liability for the contents or use thereof. The United States Government does not endorse products or manufacturers. Trade or manufacturer's names appear herein solely because they are considered essential to the objective of this report. This document does not constitute FAA Flight Standards policy. Consult your local FAA Flight Standards office as to its use.

This report is available at the Federal Aviation Administration William J. Hughes Technical Center's Full-Text Technical Reports page: actlibrary.tc.faa.gov in Adobe Acrobat portable document format (PDF).

Technical Report Documentation Page

1. Report No.	2. Government Accession No.	3. Recipient's Catalog No.
DOT/FAA/AR-09/36		

4. Title and Subtitle	5. Report Date
14 CFR PART 135 CERTIFICATE HOLDER FUNCTIONAL MODEL	October 2009
	6. Performing Organization Code
7. Author(s)	8. Performing Organization Report No.
Chakradhar Agava[1] and Huasheng Li[2]	
9. Performing Organization Name and Address	10. Work Unit No. (TRAIS)
Hi-Tec Systems[1] 500 Scarborough Drive Egg Harbor Township, NJ 08234 Federal Aviation Administration[2] William J. Hughes Technical Center Airport and Aircraft Safety Research and Development Division Flight Safety Team Atlantic City International Airport, NJ 08405	
	11. Contract or Grant No.
12. Sponsoring Agency Name and Address	13. Type of Report and Period Covered
U.S. Department of Transportation Federal Aviation Administration Air Traffic Organization NextGen & Operations Planning Office of Research and Technology Development Washington, DC 20591	
	14. Sponsoring Agency Code ASF-030

15. Supplementary Notes

The Federal Aviation Administration Airport and Aircraft Safety R&D Division COTR was jennelle Derrickson.

16. Abstract

This report documents the development of the generic functional model of Title 14 Code of Federal Regulations (CFR) Part 135 certificate holders, based on the Air Carrier Operations System Model, which is a functional model of 14 CFR Part 121 certificate holders developed jointly by the Federal Aviation Administration (FAA) and industry partners in 2002.

The 14 CFR Part 135 Certificate Holder Functional Model identifies the functions that should be performed by 14 CFR Part 135 certificate holders. It does not address the issues of how, who, when, and where to perform these functions. Because of different sizes of the operations, business managements, cultures, aircraft types, and regulatory requirements, each air operator may have its own way to do business. However, no matter how, when, where, and who (one person or hundreds of people) does the job, the functions are always the same.

The model structure uses the Integrated Definition Function Model (IDEF0) format, as defined in Federal Information Processing Standards Publication 183, and as captured in BPwin, a commercial software product from Platinum Technologies. This structured technique will enhance and clarify the analysis of critical system interactions and potential system vulnerabilities. The descriptions of complex operations will be explicit and open.

The 14 CFR Part 135 certificate holder functional model will serve as the foundation for FAA research, engineering and development efforts to support a system safety approach to aviation safety oversight. The model also provides an important communications bridge between the FAA and the aviation industry. By identifying the functions and definitions of the model, both the FAA and the aviation industry use the same model and definitions when referring to each necessary function.

17. Key Words	18. Distribution Statement
14 CFR Part 135 Certificate Holders, Commuter and on-demand operations, Functional model	This document is available to the U.S. public through the National Technical Information Service (NTIS), Springfield, Virginia 22161.

19. Security Classif. (of this report)	20. Security Classif. (of this page)	21. No. of Pages	22. Price
Unclassified	Unclassified	249	

Form DOT F 1700.7 (8-72) Reproduction of completed page authorize

ACKNOWLEDGEMENTS

This research effort was greatly facilitated by the help of several key individuals. The authors would like to thank the following individuals for their guidance, input, and contribution to this research effort. Special thanks go to Fred Leonelli, Richard Berg, Max Halliburton, Lynn Jensen, and Stefan Keller of the FJ Leonelli Group, Inc., who were instrumental in the development and validation of the model.

TABLE OF CONTENTS

		Page
EXECUTIVE SUMMARY		xv
1.	INTRODUCTION	1
1.1	The 14 CFR Part 135 Certificate Holder Functional Model	1
1.2	Objectives	2
1.3	Research, Engineering and Development Efforts	3
2.	INTEGRATED DEFINITION LANGUAGE NOTATION	3
3.	MODEL DESCRIPTION	5
3.1	Purpose	5
3.2	Scope	5
3.3	Viewpoint	6
3.4	Audience	6
3.5	Model Development Philosophy	6
3.5.1	Activity (Function) Decomposition	6
3.5.2	Status Arrows	8
3.5.3	Directives Arrows	8
3.5.4	Control Patterns	8
3.5.5	Tunneled Arrow	9
4.	MODEL ACTIVITY HIERARCHY	9
5.	MODEL DIAGRAMS	14
5.1	A-0—Perform Certificate Holder Operations	17
5.2	A0—Perform Certificate Holder Operations	20
5.2.1	A1—Manage Certificate Holder Operations	20
5.2.2	A2—Perform Air Transportation	20
5.2.3	A3—Perform Aircraft Maintenance, Inspection & Engineering	20
5.2.4	A4—Perform Personnel Training	20
5.2.5	A5—Provide Certificate Holder Operation Resources	21
5.3	A1—Manage Certificate Holder Operations	23
5.3.1	A1.1—Manage Certificate Holder Functions	23
5.3.2	A1.2—Plan Operations	23
5.3.3	A1.3—Perform Operational Control	23
5.3.4	A1.4—Project Utilization	24
5.3.5	A1.5—Develop Certificate Holder Policies & Procedures	24

5.3.6 A1.6—Administer Safety Program 24
5.3.7 A1.7—Perform Information Management 24

5.4 A1.2—Plan Operations 26

5.4.1 A1.2.1—Coordinate Plan Development 26
5.4.2 A1.2.2—Develop Flight Operations Plan 26
5.4.3 A1.2.3—Develop Maintenance Plan 26
5.4.4 A1.2.4—Develop Training Plan 26
5.4.5 A1.2.5—Develop Resource Provision Plan 27

5.5 A1.3—Perform Operational Control 29

5.5.1 A1.3.1—Manage Operational Control 29
5.5.2 A1.3.2—Plan Flight Segments 29
5.5.3 A1.3.3—Dispatch Aircraft 29
5.5.4 A1.3.4—Perform Maintenance Control 30

5.6 A1.3.2—Plan Flight Segments 32

5.6.1 A1.3.2.1—Manage Flight Segment Planning 32
5.6.2 A1.3.2.2—Evaluate Weather 32
5.6.3 A1.3.2.3—Plan Flight Routes 32
5.6.4 A1.3.2.4—Accept Payload 32
5.6.5 A1.3.2.5—Perform Load/Fuel Planning 33
5.6.6 A1.3.2.6—Assign Aircraft 33
5.6.7 A1.3.2.7—Assign Crewmember(s) 33

5.7 A1.3.3—Dispatch Aircraft 35

5.7.1 A1.3.3.1—Manage Aircraft Dispatch 35
5.7.2 A1.3.3.2—Produce Preflight Package 35
5.7.3 A1.3.3.3—Initiate Flight Locating Procedure 35
5.7.4 A1.3.3.4—Monitor Flight. 35

5.8 A1.5—Develop Certificate Holder Policies & Procedures 37

5.8.1 A1.5.1—Coordinate Certificate Holder Policy & Procedure Development 37

5.8.2 A1.5.2—Develop Maintenance Policies & Procedures 37

5.8.3 A1.5.3—Develop Operations Policies & Procedures 37

5.8.4 A1.5.4—Develop Training Policies & Procedures 37

5.8.5 A1.5.5—Develop Administrative Policies & Procedures 38

5.9 A1.5.2—Develop Maintenance Policies & Procedures 40

5.9.1 A1.5.2.1—Manage Maintenance Policy & Procedure Development 40
5.9.2 A1.5.2.2—Collect & Process Operational Data 40
5.9.3 A1.5.2.3—Perform Technical Evaluation 40
5.9.4 A1.5.2.4—Apply Approved Inspection and Maintenance Program 40

5.10 A1.5.3—Develop Operations Policies & Procedures 42

5.10.1 A1.5.3.1—Manage Operations Policy & Procedure Development 42
5.10.2 A1.5.3.2—Identify & Implement Operations Policies & Procedures 42
5.10.3 A1.5.3.3—Develop & Evaluate Operations Policies & Procedures 42

5.11 A1.6—ADMINISTER Safety PROGRAM 44

5.11.1 A1.6.1—Manage Safety Program Administration 44
5.11.2 A1.6.2—Collect/Analyze Safety Data 44
5.11.3 A1.6.3—Perform Investigation 44
5.11.4 A1.6.4—Perform Internal Evaluation 44
5.11.5 A1.6.5—Perform Safety Awareness Program 45

5.12 A1.7—Perform Information Management 47

5.12.1 A1.7.1—Coordinate Information Management 47
5.12.2 A1.7.2—Perform Recordkeeping & Reporting 47
5.12.3 A1.7.3—Administer Technical Publication 47

5.13 A2—Perform Air Transportation 50

5.13.1 A2.1—Manage Air Transportation 50
5.13.2 A2.2—Perform Quality Surveillance of Operations 50
5.13.3 A2.3—Perform Passenger Services 50
5.13.4 A2.4—Perform Ground Operations 51
5.13.5 A2.5—Perform Aircraft Operations 51

5.14 A2.3—Perform Passenger Services 53

5.14.1 A2.3.1—Manage Passenger Services 53
5.14.2 A2.3.2—Perform Preflight Cabin Duties 53
5.14.3 A2.3.3— Perform Boarding Services 54
5.14.4 A2.3.4—Perform In-Flight Services 55
5.14.5 A2.3.5—Perform Deplaning Services 55

5.15 A2.3.3—Perform Boarding Services 57

5.15.1 A2.3.3.1—Manage Boarding Services 57

5.15.2 A2.3.3.2—Provide Check-In Services 57
5.15.3 A2.3.3.3—Provide Security Services 57
5.15.4 A2.3.3.4—Provide Seating Services 57

5.16 A2.4—Perform Ground Operations 59

5.16.1 A2.4.1—Manage Ground Operations 59
5.16.2 A2.4.2—Perform Ground Handling 59
5.16.3 A2.4.3—Perform Cargo Handling 59
5.16.4 A2.4.4—Replenish Fuel 59
5.16.5 A2.4.5—Perform Line Services 59
5.16.6 A2.4.6—Perform Deicing/Anti-Icing Services 60

5.17 A2.4.3—Perform Cargo Handling 62

5.17.1 A2.4.3.1—Manage Cargo Handling 62
5.17.2 A2.4.3.2—Check/Weigh/Accept Cargo 62
5.17.3 A2.4.3.3—Secure Cargo 62
5.17.4 A2.4.3.4—Load/Unload Cargo 62

5.18 A2.5—Perform Aircraft Operations 64

5.18.1 A2.5.1—Manage Aircraft Operations 64
5.18.2 A2.5.2—Perform Departure Operations 64
5.18.3 A2.5.3—Perform Cruise Operations 64
5.18.4 A2.5.4—Perform Arrival Operations 64

5.19 A2.5.2—Perform Departure Operations 66

5.19.1 A2.5.2.1—Manage Departure Operations 66
5.19.2 A2.5.2.2—Perform Predeparture Ground Operations 66
5.19.3 A2.5.2.3—Perform Takeoff Operations 67
5.19.4 A2.5.2.4—Perform Climb Operations 67

5.20 A2.5.2.3—Perform Takeoff Operations 69

5.20.1 A2.5.2.3.1—Manage Takeoff Operations 69
5.20.2 A2.5.2.3.2—Perform Takeoff Prior to V1 69
5.20.3 A2.5.2.3.3—Perform Takeoff at/After V1 69

5.21 A2.5.2.4—Perform Climb Operations 71

5.21.1 A2.5.2.4.1—Manage Climb Operations 71
5.21.2 A2.5.2.4.2—Perform Initial Climb Operations 71
5.21.3 A2.5.2.4.3—Perform Normal Climb Operations 71

5.22 A2.5.4—Perform Arrival Operations 73

5.22.1 A2.5.4.1—Manage Arrival Operations 73
5.22.2 A2.5.4.2—Perform Descent Operations 73
5.22.3 A2.5.4.3—Perform Approach Operations 73
5.22.4 A2.5.4.4—Perform Landing Operations 74
5.22.5 A2.5.4.5—Perform Postarrival Ground Operations 74

5.23 A2.5.4.2—Perform Descent Operations 76

5.23.1 A2.5.4.2.1—Manage Descent Operations 76
5.23.2 A2.5.4.2.2—Perform Initial Descent Operations 76
5.23.3 A2.5.4.2.3—Perform Descent and Approach Operations 76

5.24 A3—Perform Maintenance, Inspection & Engineering 78

5.24.1 A3.1—Manage MIE 78
5.24.2 A3.2—Perform Surveillance of Maintenance 78
5.24.3 A3.3—Perform Aircraft Maintenance 78
5.24.4 A3.4—Obtain Engineering Support 78

5.25 A3.2—Perform Surveillance of Maintenance 80

5.25.1 A3.2.1—Manage Quality Surveillance 80
5.25.2 A3.2.2—Perform Quality Assurance 80
5.25.3 A3.2.3—Perform Quality Control 80

5.26 A3.2.2—Perform Quality Assurance 83

5.26.1 A3.2.2.1—Manage QA Process 83
5.26.2 A3.2.2.2—Monitor Mechanical Performance 83
5.26.3 A3.2.2.3—Perform Maintenance Program Audit/Investigation 85
5.26.4 A3.2.2.4—Analyze Quality Data & Develop Responses 85
5.26.5 A3.2.2.5—Perform QA Administrative Function 86

5.27 A3.2.2.2—Monitor Mechanical Performance 88

5.27.1 A3.2.2.2.1—Manage Mechanical Performance Monitoring 88
5.27.2 A3.2.2.2.2—Collect & Analyze Operational Data 88
5.27.3 A3.2.2.2.3—Identify Mechanical Deficiencies 88

5.28 A3.3—Perform Aircraft Maintenance 90

5.28.1 A3.3.1—Manage Aircraft Maintenance 90
5.28.2 A3.3.2—Evaluate Aircraft 90
5.28.3 A3.3.3—Perform Scheduled/Nonscheduled Maintenance 90

5.29 A3.3.2—Evaluate Aircraft 92

5.29.1 A3.3.2.1—Manage Aircraft Evaluation 92
5.29.2 A3.3.2.2—Detect Aircraft Discrepancies 92
5.29.3 A3.3.2.3—Diagnose Aircraft Discrepancies 92
5.29.4 A3.3.2.4—Evaluate Aircraft Discrepancies 92

5.30 A3.3.3—Perform Scheduled/Nonscheduled Maintenance 94

5.30.1 A3.3.3.1—Manage Scheduled/Nonscheduled Aircraft Maintenance 94
5.30.2 A3.3.3.2—Perform Line Maintenance 94
5.30.3 A3.3.3.3—Perform Heavy Maintenance 94
5.30.4 A3.3.3.4—Perform Component Maintenance 94

5.31 A3.3.3.3—Perform Heavy Maintenance 96

5.31.1 A3.3.3.3.1—Manage Heavy Maintenance 96
5.31.2 A3.3.3.3.2—Perform Aircraft Repair 96
5.31.3 A3.3.3.3.3—Perform Aircraft Test and Evaluation 96

5.32 A3.3.3.4—Perform Component Maintenance 98

5.32.1 A3.3.3.4.1—Manage Component Maintenance 98
5.32.2 A3.3.3.4.2—Perform Configuration Control 98
5.32.3 A3.3.3.4.3—Evaluate/Maintain Aircraft Components 98
5.32.4 A3.3.3.4.4—Perform Part Usage Analysis 99

5.33 A3.4—Obtain Engineering Support 101

5.33.1 A3.4.1—Manage Engineering Support 101
5.33.2 A3.4.2—Perform Standardization & Modification 101
5.33.3 A3.4.3—Perform Aircraft/Fleet Operation Support 101

5.34 A4—Perform Personnel Training 104

5.34.1 A4.1—Manage Personnel Training 104
5.34.2 A4.2—Identify & Analyze Training Requirements 104
5.34.3 A4.3—Design & Develop Training 104
5.34.4 A4.4—Implement and Record Training 104
5.34.5 A4.5—Evaluate Training 105

5.35 A4.3—Design & Develop Training 107

5.35.1 A4.3.1—Manage Training Design & Development 107
5.35.2 A4.3.2—Develop Training Objectives 107
5.35.3 A4.3.3—Set Performance Standards 107
5.35.4 A4.3.4—Select Training Provider 107

5.35.5 A4.3.5—Develop Training Curriculum 107

5.36 A4.4—Implement and Record Training 109

5.36.1 A4.4.1—Manage Training Implementation and Record 109
5.36.2 A4.4.2—Conduct Instructor-Led Training 109
5.36.3 A4.4.3—Conduct Self-Study Training 109
5.36.4 A4.4.4—Conduct Device/Simulator Training 109
5.36.5 A4.4.5—Conduct Aircraft Training 109

5.37 A4.5—Evaluate Training 111

5.37.1 A4.5.1—Manage Training Evaluation 111
5.37.2 A4.5.2—Conduct Training System Evaluation 111
5.37.3 A4.5.3—Conduct Personnel Evaluation 111

5.38 A5—Provide Certificate Holder Operation Resources 113

5.38.1 A5.1—Manage Certificate Holder Operation Resource Provision 113
5.38.2 A5.2—Identify Resource Needs 113
5.38.3 A5.3—Collect Resource Information 113
5.38.4 A5.4—Procure Resources 113
5.38.5 A5.5—Provide Human Resources 113
5.38.6 A5.6—Handle Material Resources 114

5.39 A5.5—Provide Human Resources 116

5.39.1 A5.5.1—Manage Human Resource Provision 116
5.39.2 A5.5.2—Select Candidates for Job Positions 116
5.39.3 A5.5.3—Review Currency Status 116
5.39.4 A5.5.4—Review Flight/Duty Time Status 117
5.39.5 A5.5.5—Release Personnel for Assignment 117

5.40 A5.6—Handle Material Resources 119

5.40.1 A5.6.1—Manage Material Resource Handling 119
5.40.2 A5.6.2—Receive Resources 119
5.40.3 A5.6.3—Store Resources 119
5.40.4 A5.6.4—Distribute Resources 119

6. GLOSSARY 120

7. GENERAL DEFINITIONS 223

LIST OF FIGURES

Figure		Page
1	IDEF0 Model View	4
2	A Typical IDEF0 Diagram Hierarchy	5
3	Function Decomposition Philosophy	7
4	Typical Diagram Template	8
5	Examples of Control Patterns	9

LIST OF ACRONYMS

AAIP	Approved Aircraft Inspection Program
ACOSM	Air Carrier Operations System Model
AD	Airworthiness Directives
AFM	Approved Flight Manual
AMOC	Alternate means of compliance
AQP	Advanced Qualification Program
ASAP	Aviation Safety Action Program
ATA	Air Transportation Association
ATC	Air Traffic Control
CAA	Civil Aviation Authority
CAMP	Continuous Airworthiness Maintenance Program
CASE	Coordinating Agency for Supplier Evaluation
CASS	Continuing Analysis Surveillance Systems
CAT II	Category II
CAT III	Category III
CDL	Configuration deviation list
CFR	Code of Federal Regulations
COMAT	Company-owned material
CRM	Crew Resource Management
DAS	Designated Alteration Station
DOT	Department of Tranportation
ESD	Electrostatic discharge
ETOP	Extended-range operation with two-engine airplanes
FAA	Federal Aviation Administration
FAF	Final Approach Fix
FMC	Flight Management Computer
FMS	Flight Management System
FOM	Flight Operations Manual
FOQA	Flight Operation Quality Assurance
GMM	General Maintenance Manual
GOM	General Operations Manual
HAZMAT	Hazardous material
IAF	Initial Approach Fix
IATA	International Air Transport Association
ICAO	International Civil Aviation Organization
ICOM	Input, Control, Output, Mechanism
IDEF0	Integrated Definition Language
IEP	Internal Evaluation Program
IFR	Instrument flight rules
ILS	Instrument Landing System
LOI	Letter of inquiry
MAP	Missed Approach Point
MEL	Minimum equipment list
MIE	Maintenance, inspection & engineering

MIS	Mechanical Interruption Summary
MMEL	Master minimum equipment list
MRR	Mechanical Reliability Reports
NWS	National Weather Service
OEM	Original equipment manufacturer
OJI	On-the-job injury
OJT	On-the-job training
OSHA	Occupational Safety and Health Administration
PIC	Pilot-in-command
PMA	Part Manufacturer Approval
QA	Quality assurance
RADAR	Radio Detection and Ranging
R,E&D	Research, engineering and development
RFM	Rotorcraft Flight Manual
RII	Required inspection items
RNP	Reduced navigation performance
RVSM	Reduced Vertical Separation Minimum Airspace
SB	Service Bulletin
SDR	Service Difficulty Report
SFAR	Special Federal Aviation Regulation
SMS	Safety Management System
SRM	Structural Repair Manual
STC	Supplemental Type Certificate
SUP	Suspected unapproved parts
SWARS	Supplemental Aviation Weather Reporting Stations
TCA	Transport Canada Aviation
TSO	Technical Standard Order
ULD	Unit load device
V1	Takeoff decision speed

EXECUTIVE SUMMARY

Rigorous, defensible analyses, based on a validated functional model and standardized, objective data, are a necessary integral component of the systems safety approach to identifying, measuring, and predicting safety-related problems. The foundation for an effective systems safety approach is (1) a requirements analysis to determine the necessary capabilities of a certificate holder oversight system and (2) a functional analysis to describe the structure of a certificate holder. The functional analysis should include a description of the elements of the certificate holder's functions and an analysis of the relationship between these elements. These analyses form the basic architecture upon which other task areas—hazard analysis, performance measure, and risk indicator design—are based. The output of a functional analysis is a systems engineering model that presents the major processes of the system, identifying inputs, outputs, mechanisms, and controls in graphical format.

Representatives from the Federal Aviation Administration (FAA) William J. Hughes Technical Center, Hi-Tec Systems, and FJ Leonelli Group, Inc. developed a generic functional model of Title 14 Code of Federal Regulations (CFR) Part 135 certificate holders, based on the Air Carrier Operations System Model, which is a functional model of 14 CFR Part 121 certificate holders developed jointly by FAA and aviation industry partners in 2002.

The 14 CFR Part 135 Certificate Holder Functional Model identifies the functions that should be performed by 14 CFR Part 135 certificate holders. It does not address the issues of how, who, when, and where to perform these functions. Because of different sizes of the operations, business managements, cultures, aircraft types, and regulatory requirements, each certificate holder may have its own way to do business. However, no matter how, when, where, or who (one person or hundreds of people) does the job, the functions are always the same. For example, the Perform Engineering Support function in this model may be conducted in different ways among different certificate holders. Large certificate holders may have their own engineering support team, whereas small certificate holders may use manufacturer's support. However, both large and small certificate holders share the same function of Perform Engineering Support in the functional model.

There are different types of operations with 14 CFR Part 135 certificate holders, such as:

- Single Pilot Operator
- Single Pilot in Command Operator
- 14 CFR Part 135 Operations with nine or less passengers
- 14 CFR Part 135 Operations with ten or more passengers
- 14 CFR Part 135 Commuter

The majority of the functions are the same among those different types of operators. However, as the significant variations of 14 CFR Part 135 certificate holders in aircraft types, in regulatory requirements, and in company size from single pilot operator to an operator with hundreds of employees, some operational functions may only be applicable to certain types of operations. Therefore, a specific 14 CFR Part 135 certificate holder may only be involved with some functions, instead of all functions, of the model. For example, depending on aircraft type

certificated passenger configurations, maintenance programs may vary significantly from maintenance and inspection performed under 14 CFR Part 91, (i.e., 100-Hour/Annual Inspection), Approved Aircraft Inspection Programs, to a Continuous Airworthiness Maintenance Program (CAMP). Manual requirements are another significant variation area among different types of 14 CFR Part 135 certificate holders. The only manual requirement for Single Pilot 14 CFR Part 135 Operators is a Statement of Compliance; however, a General Maintenance Manual is required for 14 CFR Part 135 operations using aircraft that are certificated for ten or more passenger seats. This model identifies all the potential functions performed by 14 CFR Part 135 certificate holders and provides a blueprint to guide a specific certificate holder on how to conduct its business.

The 14 CFR Part 135 Certificate Holder Functional Model will serve as the foundation for FAA research, engineering and development (R, E&D) efforts to support a systems safety approach to aviation safety oversight.

The model also provides an important communications bridge between the FAA and the aviation industry. By identifying the functions and definitions of the model, both the FAA and the aviation industry use the same model and definitions when referring to each necessary function.

The model structure uses the Integrated Definition Function Model (IDEF0) format, as defined in Federal Information Processing Standards Publication 183, and as captured in BPwin, a commercial software product from Platinum Technologies. This structured language and tool will enhance and clarify the analysis of critical system interactions and potential system vulnerabilities. The descriptions of complex operations will be explicit and open.

It is noteworthy that the 14 CFR Part 135 Certificate Holder Functional Model is still open for discussion and revision as it was developed by a small group of subject matter experts within a limited timeframe. Some areas may not be properly addressed or some new issues may arise from changes within the aviation industry.

1. INTRODUCTION.

Rigorous, defensible analyses, based on a validated functional model and standardized, objective data, are a necessary integral component of the system safety approach to identifying, measuring, and predicting safety-related problems. The foundation for an effective systems safety approach is (1) a requirements analysis to determine the capabilities that a certificate holder oversight system must have and (2) a functional analysis to describe the structure of a certificate holder. Important aspects of the functional analysis are a description of the elements of the certificate holder's functions and an analysis of the relationship between these elements. These analyses form the foundation or basic architecture upon which other task areas—hazard analysis, performance measure, and risk indicator design—are based. The output of a functional analysis is a system-engineering model that presents the major processes of the system, identifying inputs, outputs, mechanisms, and controls in graphical format.

1.1 THE 14 CFR PART 135 CERTIFICATE HOLDER FUNCTIONAL MODEL.

Representatives from the Federal Aviation Administration (FAA) William J. Hughes Technical Center, Hi-Tec Systems, and FJ Leonelli Group developed a generic functional model of Title 14 Code of Federal Regulations (CFR) Part 135 certificate holders, based on the Air Carrier Operations System Model (ACOSM), which is a functional model of 14 CFR Part 121 certificate holders developed jointly by the FAA and industry partners in 2002.

The 14 CFR Part 135 Certificate Holder Functional Model identifies the functions that should be performed by 14 CFR Part 135 certificate holders. It does not address the issues of how, who, when, and where to perform these functions. Because of different sizes of the operations, business managements, cultures, aircraft types, and regulatory requirements, each air operator may have its own way to do business. However, no matter how, when, where, and who (one person or hundreds of people) does the job, the functions are always the same. For example, function Perform Engineering Support may be conducted in different ways among different certificate holders. Large certificate holders may have their own engineering support team, whereas small certificate holders may use manufacturer's support. However, both large and small certificate holders share the same function Perform Engineering Support in the functional model.

There are different types of 14 CFR Part 135 certificate holders, such as:

- Single Pilot Operator
- Single Pilot in Command Operator
- 14 CFR Part 135 Operations with nine or less passengers
- 14 CFR Part 135 Operations with ten or more passengers
- 14 CFR Part 135 Commuter

The majority of the functions are the same among those different types of operators. However, as the significant variations of 14 CFR Part 135 certificate holders in aircraft types, in regulatory requirements, and in company size from single pilot operator to an operator with hundreds of employees, some operational functions may only be applicable to certain types of operations. Therefore, a specific 14 CFR Part 135 certificate holder may only be involved with some functions,

instead of all functions, of the model. For example, depending on aircraft type certificated passenger configurations, maintenance programs may vary significantly from maintenance and inspection performed under 14 CFR Part 91, (i.e., 100-Hour/Annual Inspection), Approved Aircraft Inspection Programs (AAIP), to a Continuous Airworthiness Maintenance Program (CAMP), and so forth. Another significant variation area among different types of 14 CFR Part 135 certificate holders is the manual requirement. Single pilot 14 CFR Part 135 operators are not required to maintain manuals. The only manual requirement is a Statement of Compliance, whereas a General Maintenance Manual is required for 14 CFR Part 135 operations using aircraft that are certificated for ten or more passenger seats. This model identifies all the potential functions performed by 14 CFR Part 135 certificate holders and provides a blueprint to guide a specific certificate holder to conduct its business.

The 14 CFR Part 135 Certificate Holder Functional Model will serve as the foundation for FAA research, engineering and development (R, E&D) efforts to support a system safety approach to aviation safety oversight.

The model also provides an important communications bridge between the FAA and the aviation industry. By identifying and agreeing upon the functions and definitions of the model, both the FAA and the aviation industry are looking at the same model, using the same definitions, and talking about the same thing.

The model structure uses the Integrated Definition Function Model (IDEF0) format, as defined in Federal Information Processing Standards Publication 183, and as captured in BPwin, a commercial software product from Platinum Technologies. With this structured language and tool, the analysis of critical system interactions and potential system vulnerabilities will be enhanced and clarified. The descriptions of complex operations will be explicit and open.

1.2 OBJECTIVES.

The goals of the 14 CFR Part 135 Certificate Holder Functional Model effort are

- to develop a functional model (using the IDEF0 standard) that demonstrates the processes and inter-relationships of the certificate holder functions to be used in the development of the FAA Safety Assurance Oversight System on 14 CFR Part 135 air operators.

- to provide common definitions of certificate holder processes and terminology to promote mutual understanding of certificate holder operational activities and functions.

The 14 CFR Part 135 Certificate Holder Functional Model is critical for understanding the impact of change related to certificate holder and FAA activities and the interactions among the elements of the certificate holders and other programs. An accurate descriptive functional model will enable certificate holders and the FAA to interact more effectively on safety management matters.

1.3 RESEARCH, ENGINEERING AND DEVELOPMENT EFFORTS.

The following R, E&D are parallels efforts that also support the model:

- The development of additional models to be used to give more consideration to the understanding of safety-critical relationships between certificate holders and their supporting maintenance and training contractors.

- The identification of the 14 CFRs associated with each Input, Control, Output, Mechanism (ICOM) and process.

- The identification of the 14 CFRs associated with the interfaces across diagrams.

- The identification of the hazards associated with 14 CFR Part 135 certificate holders.

2. INTEGRATED DEFINITION LANGUAGE NOTATION.

IDEF0 (pronounced eye-deaf-zero) is a modeling technique used to create a description of a business or organizational process and is used to analyze how the organization or system currently conducts its business.

IDEF0 is a graphical approach using boxes and arrows to describe a process. The boxes represent activities conducted within the organization or system and arrows represent objects or information involved in the activities. The arrows are subdivided into four categories:

- Inputs: Items consumed by the activity, e.g., materials, information

- Controls: Documentation that guides, regulates, or influences the activity, e.g., rules, regulations, policies, procedures

- Outputs: Items produced by the activity, e.g., material, information

- Mechanisms: Entities used to realize the activity, e.g., people, organizations, systems, facilities, equipment

In IDEF0 terminology, these are called ICOMs, an acronym for **I**nput, **C**ontrol, **O**utput, and **M**echanism. ICOMs connect to an activity box from different sides of the box: Controls connect at the top, Inputs connect at the left, Outputs connect at the right, and Mechanisms connect at the bottom, as shown in figure 1.

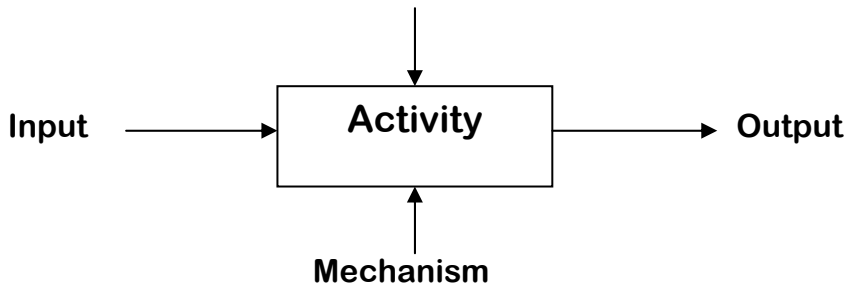

Figure 1. IDEF0 Model View

An IDEF0 model represents the whole system as a simple activity in a single diagram, called the context activity. A diagram is the detailed description of a certain activity (or function) whose name (TITLE) and activity number (NODE) in the activity hierarchy are shown at the bottom of each diagram. A diagram consists of boxes representing the activities (functions) and arrows representing the interaction of the information or objects with the related activities.

The context diagram, the A-0 diagram, pronounced "A - zero diagram," defines the context and the system boundary the model addresses. The context activity box appears on this diagram representing the function of the system; arrows entering or exiting this box indicate interactions between the system and the external environment. When the context activity is decomposed into detailed levels, those arrows will automatically link to corresponding subactivities and appear on the subdiagrams. As the process becomes more detailed, the context activity is decomposed to subordinate levels, and subdiagrams are created to show those subactivities. This decomposition process continues until all relevant activities are evaluated relative to the context activity. These hierarchical diagrams comprise the core of the IDEF0 model.

Figure 2 shows a typical decomposition diagram hierarchy.

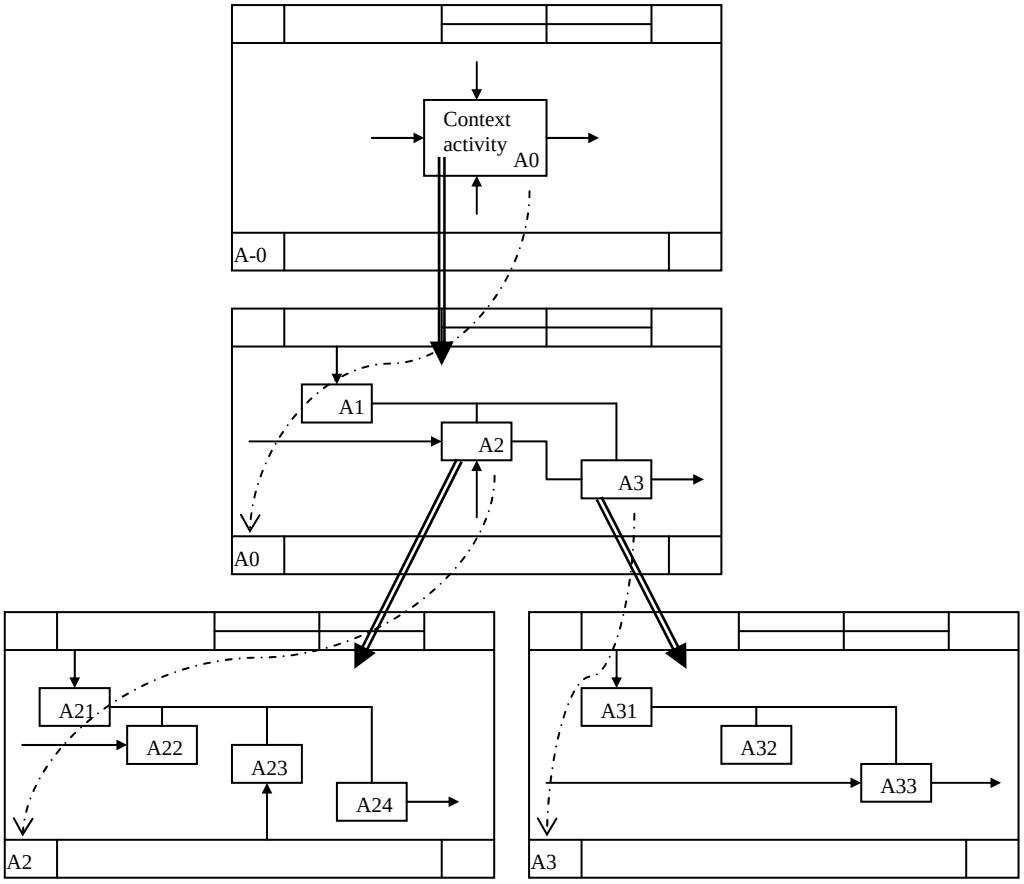

Figure 2. A Typical IDEF0 Diagram Hierarchy

3. MODEL DESCRIPTION.

3.1 PURPOSE.

The purpose of the 14 CFR Part 135 Certificate Holder Functional Model is to develop a generic functional model of 14 CFR Part 135 certificate holder operation activities and interactions among functions used to accomplish those activities. By identifying the functions and definitions of the model, both the FAA and the aviation industry use the same model and definitions when referring to each necessary function.

3.2 SCOPE.

The 14 CFR Part 135 Certificate Holder Functional Model concentrates on following key certificate holder operation processes:

- Operational management
- Air transportation
- Aircraft maintenance, inspection, and engineering
- Personnel training

- Operational resources provision

The following are beyond the scope of the 14 CFR Part 135 Certificate Holder Functional Model:

- Sales and marketing initiatives such as pricing, scheduling, advertising, ticket and cargo sales, reservations, and customer services.

- Processes with supporting staff, such as accounting, finances and property acquisition, information services, human resources, medical, legal, public relations, and processes done by some subcontractors, e.g., screening and food services.

The model can be defined at different levels of detail to meet various kinds of requirements. As the first effort, the 14 CFR Part 135 Certificate Holder Functional Model details certificate holder operation processes down several layers until further detail becomes less beneficial in the generic model.

3.3 VIEWPOINT.

The model is developed from the certificate holder owners' or certificate holder business managers' viewpoint.

3.4 AUDIENCE.

The model is intended for those with a background in the air transportation industry.

3.5 MODEL DEVELOPMENT PHILOSOPHY.

The 14 CFR Part 135 Certificate Holder Functional Model is based on ACOSM, which is a generic functional model of 14 CFR Part 121 certificate holder operations. A majority of the functions are the same for 14 CFR Part 121 and 14 CFR Part 135 certificate holders; therefore, the ACOSM was used as a blueprint for 14 CFR Part 135 Certificate Holder Functional Model development.

3.5.1 Activity (Function) Decomposition.

The context activity, which is used to describe this model, is defined in section 4 as "Perform Certificate Holder Operations." Perform Certificate Holder Operations is understood as a set of activities directly related to the movement of aircraft with passengers and/or cargo from the departing airport to the destination airport, conducted by certificate holders operated under 14 CFR Part 135. The context activity, Perform Certificate Holder Operations, is decomposed into five subactivities:

- Manage Certificate Holder Operations
- Perform Air Transportation
- Perform Aircraft Maintenance, Inspection, and Engineering
- Perform Personnel Training
- Provide Certificate Holder Operation Resources

Each subactivity on this child diagram is further decomposed into a more detailed level on its own subordinate diagrams, based on the philosophy shown in figure 3.

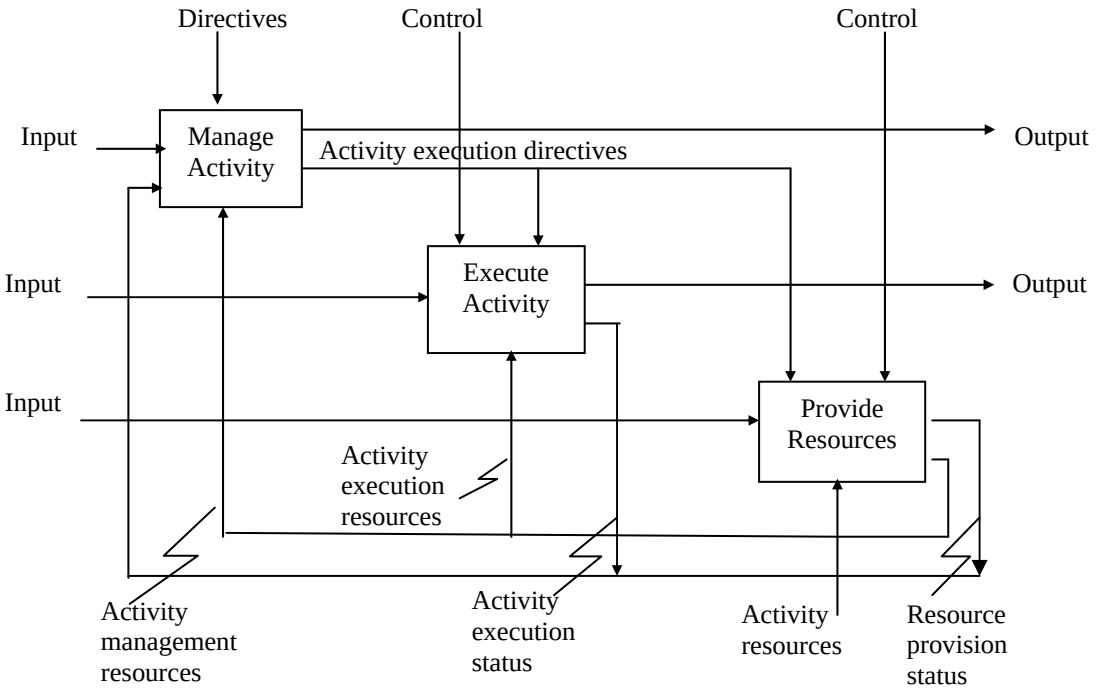

Figure 3. Function Decomposition Philosophy

- The Manage Activity function identifies activity management functions, including the scheduling, directing, and coordinating of other activities on the same diagram and also identifies the resource requirements to conduct those activities.

- The Execute Activity function converts the input to the output under the directives from the Manage Activity and with the Provide Resources function.

- The Provide Resources function selects, allocates, and supplies any necessary resources to support the above two activities. Here "resources" means the elements necessary for the successful accomplishment of certain functions. The elements include properly trained and certified personnel, adequate facilities, required information, and material support.

Since function A5 Provide Certificate Holder Operations Resources on A0 diagram in section 5 should or will acquire, allocate, and supply all resources for certificate holder operations, the box—Provide Resources on figure 3—does not need to be included on each diagram. Therefore, the decomposition template used for function decomposition is shown as figure 4.

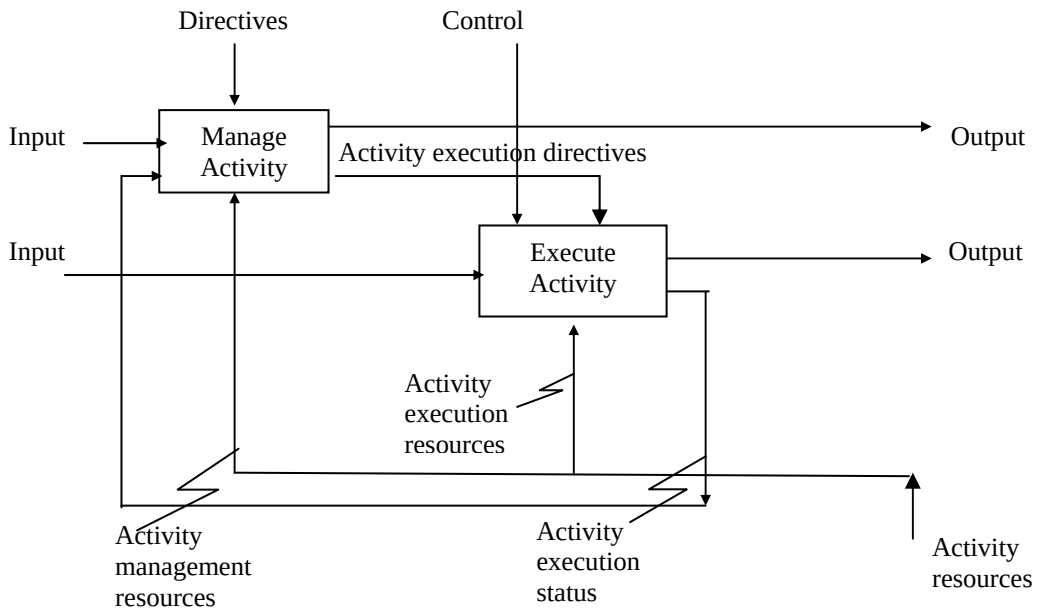

Figure 4. Typical Diagram Template

3.5.2 Status Arrows.

Each function, except the Manage Activity function located at the upper-left corner of each diagram, has a status arrow as its output. The status arrows are logical connections linking different functions to broadcast the performance of each function to others for information-sharing purposes. Those status arrows do not carry the primary information needed to initiate functions.

If a function produces specific information that is used as a primary input by another function, a separate output arrow, instead of status arrow, is used to carry this specific information.

3.5.3 Directives Arrows.

Each function has a directives arrow as its control to regulate its execution process. The directives include policies, procedures, or instructions and can exist in various forms, such as manuals, e-mail, notes, phone calls, and conversations.

3.5.4 Control Patterns.

There are two linking patterns of the control arrows imported from the parent level of function in the model. As shown in figure 5, the CONTROL arrow (bold) is either directly linked to an execution function to direct its execution (as in pattern A) or linked to a management function first and then through its OUTPUT – *function execution directives* to direct the execution of the function (as in pattern B).

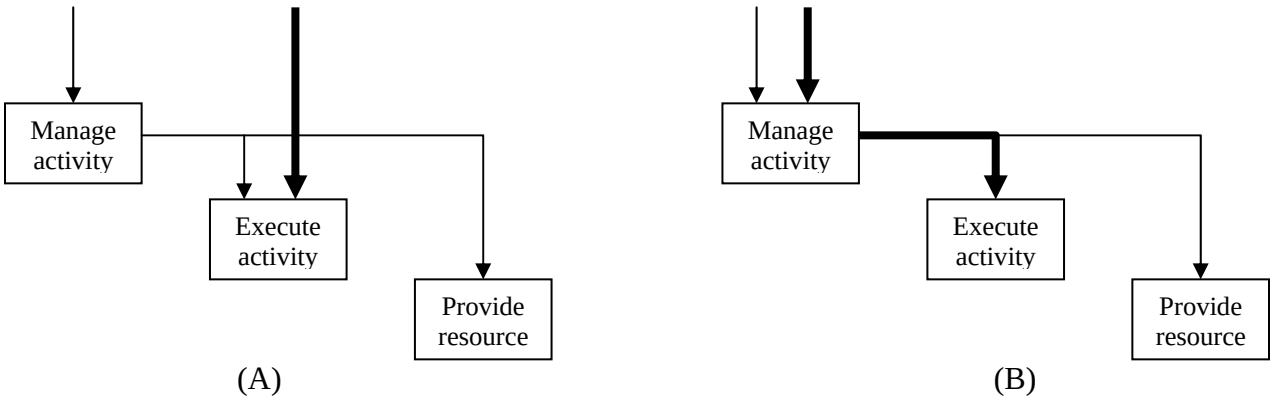

Figure 5. Examples of Control Patterns

Pattern A indicates that the CONTROL information can be directly applied to or directly used by the execution function, whereas pattern B indicates the CONTROL information needs to be converted or interpreted into "Directives" before it is used to direct the execution of activity. For example, FAA regulations cannot be directly applied to the execution of the airlines' operational functions, they need to be converted through management function into the company policies or procedures before they are used to regulate the execution functions.

3.5.5 Tunneled Arrow.

A tunneled arrow is used to provide information at a specific level of decomposition that is not required for understanding at other levels. For example, tunneling an arrow at the unconnected end means that the data or objects are not necessary at the next higher (parent) level and hence shall not be shown connecting to the parent box. For example, the INPUT to A5.5-Provide human resources, personnel to be assigned in section 5.38.5, is shown in a tunneled arrow, which means that the origin of those personnel does not need to be specified.

4. MODEL ACTIVITY HIERARCHY.

The activity number in the front of each activity shows its location in the activity hierarchy. Examples include:

- A-0 is the context activity defining the system and is located at the top of the activity hierarchy.

- A1, A2, A3, A4, and A5 are subactivities decomposed from A0 and are located on the first level of the decomposition hierarchy.

- A3.1, A3.2, A3.3, and A3.4 are subactivities decomposed from A3 and are located on the second level of the decomposition hierarchy.

- A3.3.1, A3.3.2, and A3.3.3 are subactivities decomposed from A3.3 and are located on the third level of the decomposition hierarchy.

In the IDEF0 model, a set of subactivities directly decomposed from a parent activity comprises a diagram that shows the interaction between those activities.

The activity hierarchy of the 14 CFR Part 135 Certificate Holder Functional Model is presented below.

A0 Perform Part 135 certificate holder operations

- A1 Manage certificate holder operations
- A2 Perform air transportation
- A3 Perform aircraft maintenance, inspection & engineering
- A4 Perform personnel training
- A5 Provide certificate holder operation resources

  - A1.1 Manage certificate holder functions
  - A1.2 Plan operations
  - A1.3 Perform operational control
  - A1.4 Project utilization
  - A1.5 Develop certificate holder policies & procedures
  - A1.6 Administer safety program
  - A1.7 Perform information management

    - A1.2.1 Coordinate plan development
    - A1.2.2 Develop flight operations plan
    - A1.2.3 Develop maintenance plan
    - A1.2.4 Develop training plan
    - A1.2.5 Develop resource provision plan

    - A1.3.1 Manage operational control
    - A1.3.2 Plan flight segments
    - A1.3.3 Dispatch aircraft
    - A1.3.4 Perform maintenance control

      - A1.3.2.1 Manage flight segment planning
      - A1.3.2.2 Evaluate weather
      - A1.3.2.3 Plan flight routes
      - A1.3.2.4 Accept payload
      - A1.3.2.5 Perform load/fuel planning
      - A1.3.2.6 Assign aircraft
      - A1.3.2.7 Assign crewmember(s)

      - A1.3.3.1 Manage aircraft dispatch
      - A1.3.3.2 Produce preflight package
      - A1.3.3.3 Initiate flight locating procedure
      - A1.3.3.4 Monitor flight

A1.5.1 Coordinate certificate holder policy & procedure development
A1.5.2 Develop maintenance policies & procedures
A1.5.3 Develop operation policies & procedures
A1.5.4 Develop training policies & procedures
A1.5.5 Develop administrative policies & procedures

A1.5.2.1 Manage maintenance policies & procedures development
A1.5.2.2 Collect & process operational data
A1.5.2.3 Perform technical evaluation
A1.5.2.4 Apply approved inspection and maintenance program

A1.5.3.1 Manage operations policy & procedure development
A1.5.3.2 Identify & implement operations policies & procedures
A1.5.3.3 Develop & evaluate operations policies & procedures

A1.6.1 Manage safety program administration
A1.6.2 Collect/analyze safety data
A1.6.3 Perform investigation
A1.6.4 Perform internal evaluation
A1.6.5 Perform safety awareness program

A1.7.1 Coordinate information management
A1.7.2 Perform recordkeeping & reporting
A1.7.3 Administer technical publication

A2.1 Manage air transportation
A2.2 Perform quality surveillance of operations
A2.3 Perform passenger services
A2.4 Perform ground operations
A2.5 Perform aircraft operations

A2.3.1 Manage passenger services
A2.3.2 Perform preflight cabin duties
A2.3.3 Perform boarding services
A2.3.4 Perform in-flight services
A2.3.5 Perform deplaning services

A2.3.3.1 Manage boarding services
A2.3.3.2 Provide check-in services
A2.3.3.3 Provide security services
A2.3.3.4 Provide seating services

A2.4.1 Manage ground operations
A2.4.2 Perform ground handling
A2.4.3 Perform cargo handling
A2.4.4 Replenish fuel

A2.4.5 Perform line services
A2.4.6 Perform deicing/anti-icing services

A2.4.3.1 Manage cargo handling
A2.4.3.2 Check/weigh/accept cargo
A2.4.3.3 Secure cargo
A2.4.3.4 Load/unload cargo

A2.5.1 Manage aircraft operations
A2.5.2 Perform departure operations
A2.5.3 Perform cruise operations
A2.5.4 Perform arrival operations

A2.5.2.1 Manage departure operations
A2.5.2.2 Perform predeparture ground operations
A2.5.2.3 Perform takeoff operations
A2.5.2.4 Perform climb operations

A2.5.2.3.1 Manage takeoff operations
A2.5.2.3.2 Perform takeoff prior to V1
A2.5.2.3.3 Perform takeoff at/after V1

A2.5.2.4.1 Manage climb operations
A2.5.2.4.2 Perform initial climb operations
A2.5.2.4.3 Perform normal climb operations

A2.5.4.1 Manage arrival operations
A2.5.4.2 Perform descent operations
A2.5.4.3 Perform approach operations
A2.5.4.4 Perform landing operations
A2.5.4.5 Perform postarrival ground operations

A2.5.4.2.1 Manage descent operations
A2.5.4.2.2 Perform initial descent operations
A2.5.4.2.3 Perform descent and approach operations

A3.1 Manage MIE
A3.2 Perform surveillance of maintenance
A3.3 Perform aircraft maintenance
A3.4 Perform engineering support

A3.2.1 Manage quality surveillance
A3.2.2 Perform quality assurance
A3.2.3 Perform quality control

A3.2.2.1 Manage QA process
A3.2.2.2 Monitor mechanical performance
A3.2.2.3 Perform maintenance program audit/investigation
A3.2.2.4 Analyze quality data & develop responses
A3.2.2.5 Perform QA administrative function

A3.2.2.2.1 Manage mechanical performance monitoring
A3.2.2.2.2 Collect & analyze operational data
A3.2.2.2.3 Identify mechanical deficiencies

A3.3.1 Manage aircraft maintenance
A3.3.2 Evaluate aircraft
A3.3.3 Perform scheduled/nonscheduled maintenance

A3.3.2.1 Manage aircraft evaluation
A3.3.2.2 Detect aircraft discrepancies
A3.3.2.3 Diagnose aircraft discrepancies
A3.3.2.4 Evaluate aircraft discrepancies

A3.3.3.1 Manage scheduled/nonscheduled maintenance
A3.3.3.2 Perform line maintenance
A3.3.3.3 Perform heavy maintenance
A3.3.3.4 Perform component maintenance

A3.3.3.3.1 Manage heavy maintenance
A3.3.3.3.2 Perform aircraft repair
A3.3.3.3.3 Perform aircraft test and evaluation

A3.3.3.4.1 Manage component maintenance
A3.3.3.4.2 Perform configuration control
A3.3.3.4.3 Evaluate/maintain aircraft components
A3.3.3.4.4 Perform part usage analysis

A3.4.1 Manage engineering support
A3.4.2 Perform standardization & modification
A3.4.3 Perform fleet operation support
A3.4.4 Provide engineering support resources

A4.1 Manage personnel training
A4.2 Identify & Analyze training requirements
A4.3 Design & Develop training
A4.4 Implement training
A4.5 Evaluate training

A4.3.1 Manage training design & development
A4.3.2 Develop training objectives
A4.3.3 Set performance standards
A4.3.4 Select training provider
A4.3.5 Develop training curriculum

A4.4.1 Manage training implementation and record
A4.4.2 Conduct instructor-led training
A4.4.3 Conduct self-study training
A4.4.4 Conduct device/simulator training
A4.4.5 Conduct aircraft training

A4.5.1 Manage training evaluation
A4.5.2 Conduct training system evaluation
A4.5.3 Conduct personnel evaluation

A5.1 Manage certificate holder operation resource provision
A5.2 Identify resource needs
A5.3 Collect resource information
A5.4 Procure resources
A5.5 Provide human resources
A5.6 Handle material resources

A5.5.1 Manage human resource provision
A5.5.2 Select candidates for job positions
A5.5.3 Review currency status
A5.5.4 Review flight/duty time status
A5.5.5 Release personnel for assignment

A5.6.1 Manage material resource handling
A5.6.2 Receive resources
A5.6.3 Store resources
A5.6.4 Distribute resources

5. MODEL DIAGRAMS.

The IDEF0 diagrams of the 14 CFR Part 135 Certificate Holder Functional Model, showing the interactions among activities and generated by the BPwin tool, are presented in this section. Each diagram is followed by the definitions of activities appearing on the diagram. Section 6 provides the definitions of information/objects shown as arrows on the diagrams followed by the arrow connections to show the information/object flows in the model. The definitions for general terms in the model are given in section 7.

The following conventions are used for reading facilitation purposes:

- Arrows and text in BLUE are referred to as INPUT
- Arrows and text in RED are referred to as CONTROL
- Arrows and text in BLACK are referred to as OUTPUT
- Arrows and text in GREEN are referred to as MECHANISM

USED AT:	AUTHOR: Part 135 Modeling Team PROJECT: Part 135 Certificate Holder Functional Model NOTES: 1 2 3 4 5 6 7 8 9 10	DATE: 10/1/2008 REV: 1/16/2009	WORKING DRAFT RECOMMENDED PUBLICATION	READER DATE	CONTEXT: TOP

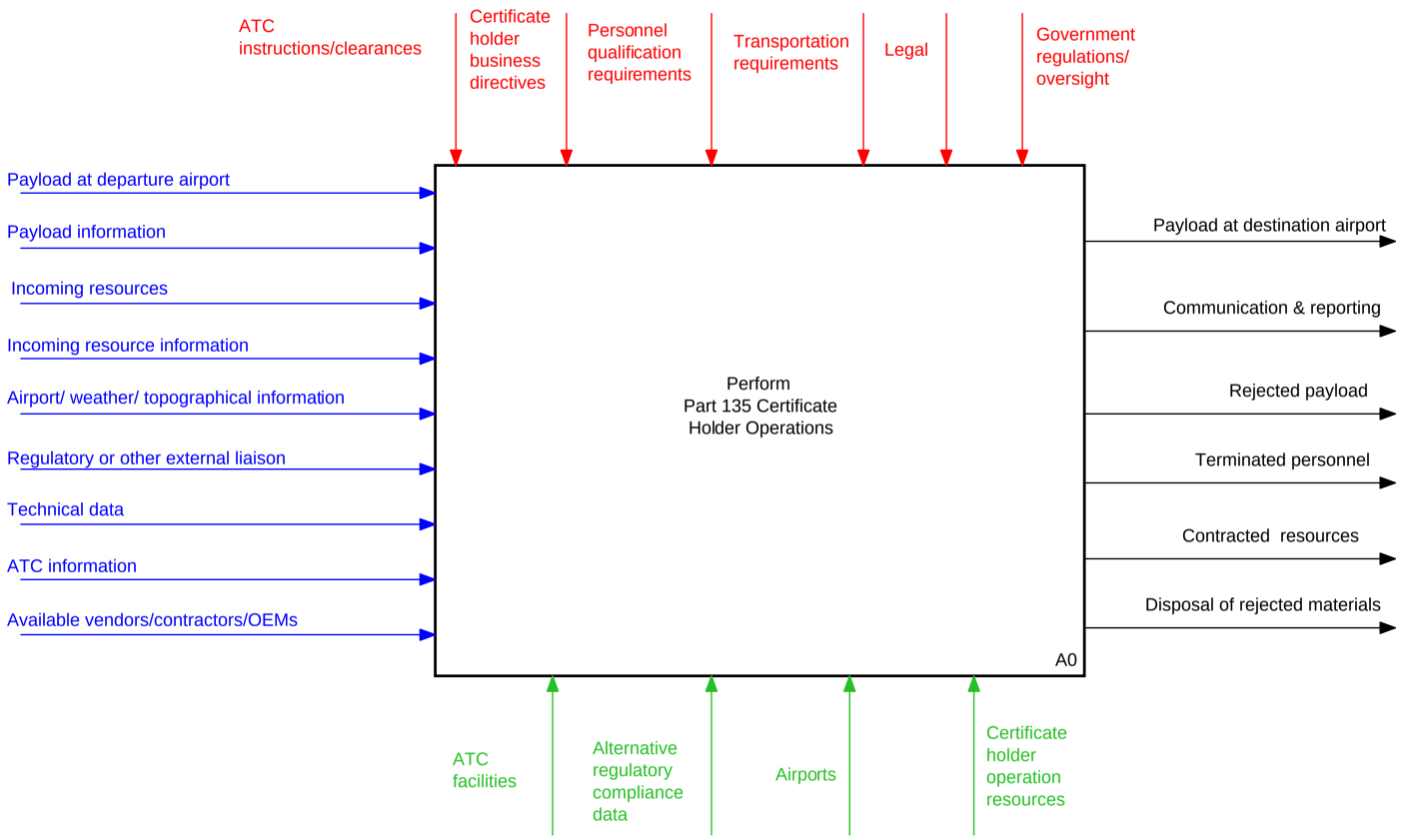

NODE:	TITLE:	NUMBER:
A-0	Perform Part 135 Certificate Holder Operations	P. 1

5.1 A-0—PERFORM PART 135 CERTIFICATE HOLDER OPERATIONS.

This function captures the process conducted by a certificate holder under 14 CFR Part 135 to provide air transportation services to transport payload (passengers and/or cargo) by aircraft from one airport to another. This function consists of the following five major components:

- Manage certificate holder operations
- Perform air transportation
- Perform maintenance, inspection & engineering
- Perform personnel training
- Provide certificate holder operation resources

This is the context activity of the 14 CFR Part 135 Certificate Holder Functional Model, which defines the system and system boundaries that the model covers. The information/objects linking to this activity represent the interaction between the certificate holder operations system and the external environment.

The outputs of this activity, shown as arrows exiting from the right side of the activity box, are:

- Payload at destination airport
- Communication & reporting
- Rejected payload
- Terminated personnel
- Contracted resources
- Disposal of rejected materials

The inputs used to generate these outputs, shown as arrows entering the left side of activity box, are:

- Payload at departure airport
- Payload information
- Incoming resources
- Incoming resource information
- Airport/weather/topographical information
- Regulatory or other external liaison

- Technical data
- Air Traffic Control (ATC) information
- Available vendors/contractors/OEMs

The execution of this activity is governed by a set of regulations or controls related to the government, the certificate holder, and its environment, etc. They are represented as controls entering the top of the activity box and include:

- ATC instructions/clearances
- Certificate holder business directives
- Personnel qualification requirements
- Transportation requirements
- Legal
- Government regulations/oversight

A set of resources are needed to support the execution of the activity that are considered as mechanisms entering the bottom of the activity box in the diagram:

- ATC facilities
- Alternative regulatory compliance data
- Airports
- Certificate holder operation resources

The ICOMs appearing on this A-0 diagram will automatically appear on its child diagrams throughout the activity decomposition but will be connected to more specific activities since the decomposition is on a more detailed level.

USED AT:	AUTHOR: Part 135 Modeling Team	DATE: 10/1/2008	WORKING	READER	DATE	CONTEXT:
	PROJECT: Part 135 Certificate Holder Functional Model	REV: 1/16/2009	DRAFT			
			RECOMMENDED			
	NOTES: 1 2 3 4 5 6 7 8 9 10		PUBLICATION			A-0

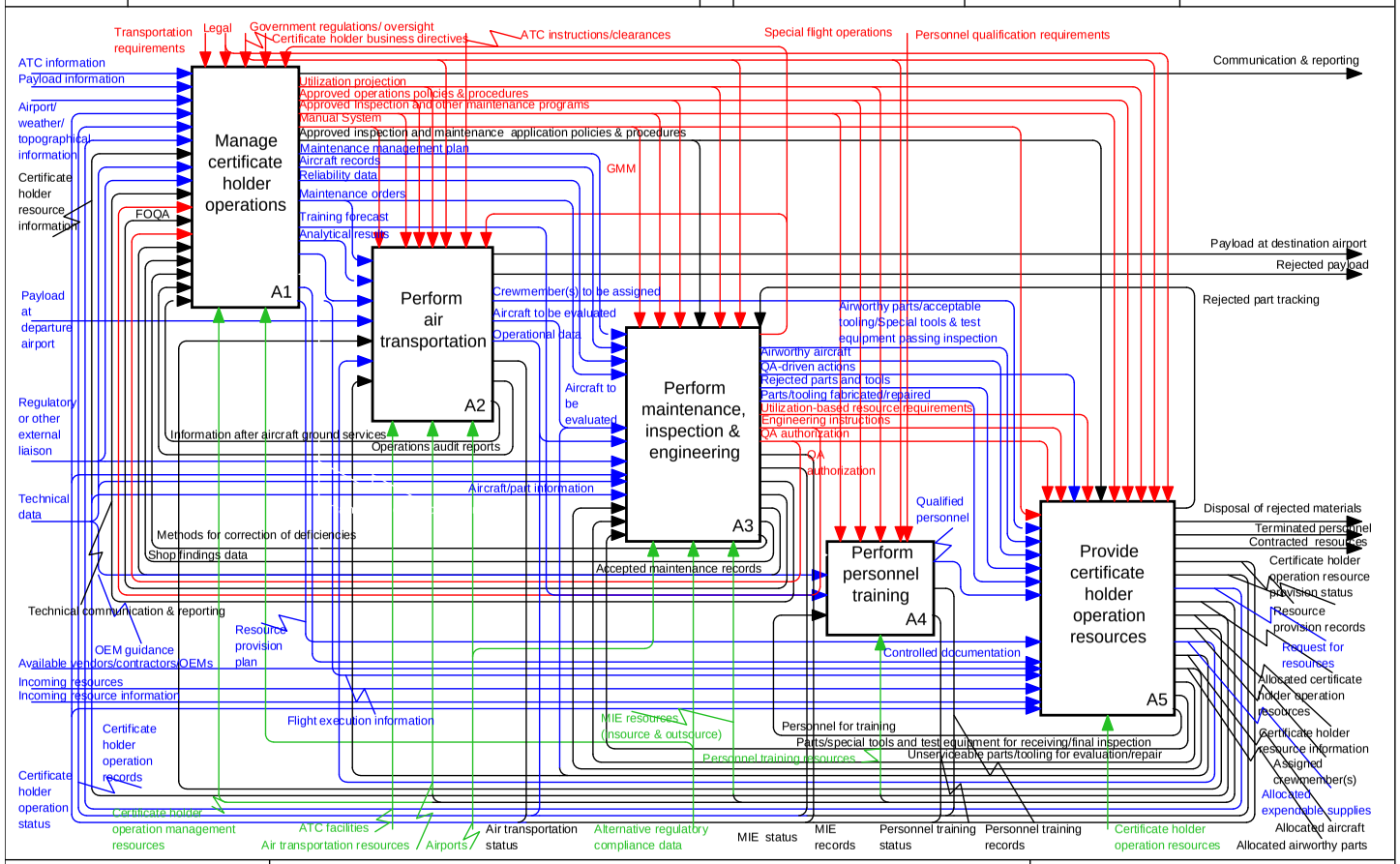

NODE:	TITLE:	NUMBER:
A0	Perform Part 135 Certificate Holder Operations	P. 2

5.2 A0—PERFORM PART 135 CERTIFICATE HOLDER OPERATIONS.

5.2.1 A1—Manage Certificate Holder Operations.

This function directs, schedules, and coordinates the following activities of certificate holder operations:

- Perform air transportation
- Perform aircraft maintenance, inspection & engineering
- Perform personnel training
- Provide certificate holder operation resources

It provides directives, defines requirements and controls, establishes performance standards for the execution of those activities, and ensures that the execution is accomplished in accordance with company policies and procedures and any required regulations for these activities.

5.2.2 A2—Perform Air Transportation.

Air transportation refers to interstate, overseas, or foreign air transportation or the transportation of mail by aircraft (14 CFR Part 1). This function carries out the task of transporting payload (passengers/cargo) from one place to another. This function includes customer or passenger services, ground operations, and aircraft operations.

5.2.3 A3—Perform Aircraft Maintenance, Inspection & Engineering.

This function maintains and surveils aircraft to prevent deterioration of the inherent safety and reliability levels of the equipment to ensure the aircraft conforms to its type design and is in a condition for safe operation. This process is usually called Maintenance, Inspection & Engineering (MIE). Maintenance refers to the inspection, overhaul, repair, preservation, and replacement of parts (14 CFR Part 1); inspection refers to quality assurance and quality controls that continually surveil and analyze the approved inspections and other maintenance programs for performance and effectiveness; and engineering refers to the provision of engineering support for aircraft maintenance. After this MIE process, the aircraft is used for flight services.

5.2.4 A4—Perform Personnel Training.

This function plans, designs, implements, and evaluates an array of procedures, methods, and practices to improve work force capabilities to meet mission/workload requirements and increase or maintain individual employee knowledge, skills, and abilities.

5.2.5 A5—Provide Certificate Holder Operation Resources.

This function acquires and allocates aircraft, personnel, parts, materials, facilities, equipment, automation, information infrastructure, tools, budget, publications, and any other required resources to support the execution of certificate holder operations.

USED AT:	AUTHOR: Part 135 Modeling Team	DATE: 10/1/2008	WORKING	READER	DATE	CONTEXT:
	PROJECT: Part 135 Certificate Holder Functional Model	REV: 1/16/2009	DRAFT			
			RECOMMENDED			
	NOTES: 1 2 3 4 5 6 7 8 9 10		PUBLICATION			A0

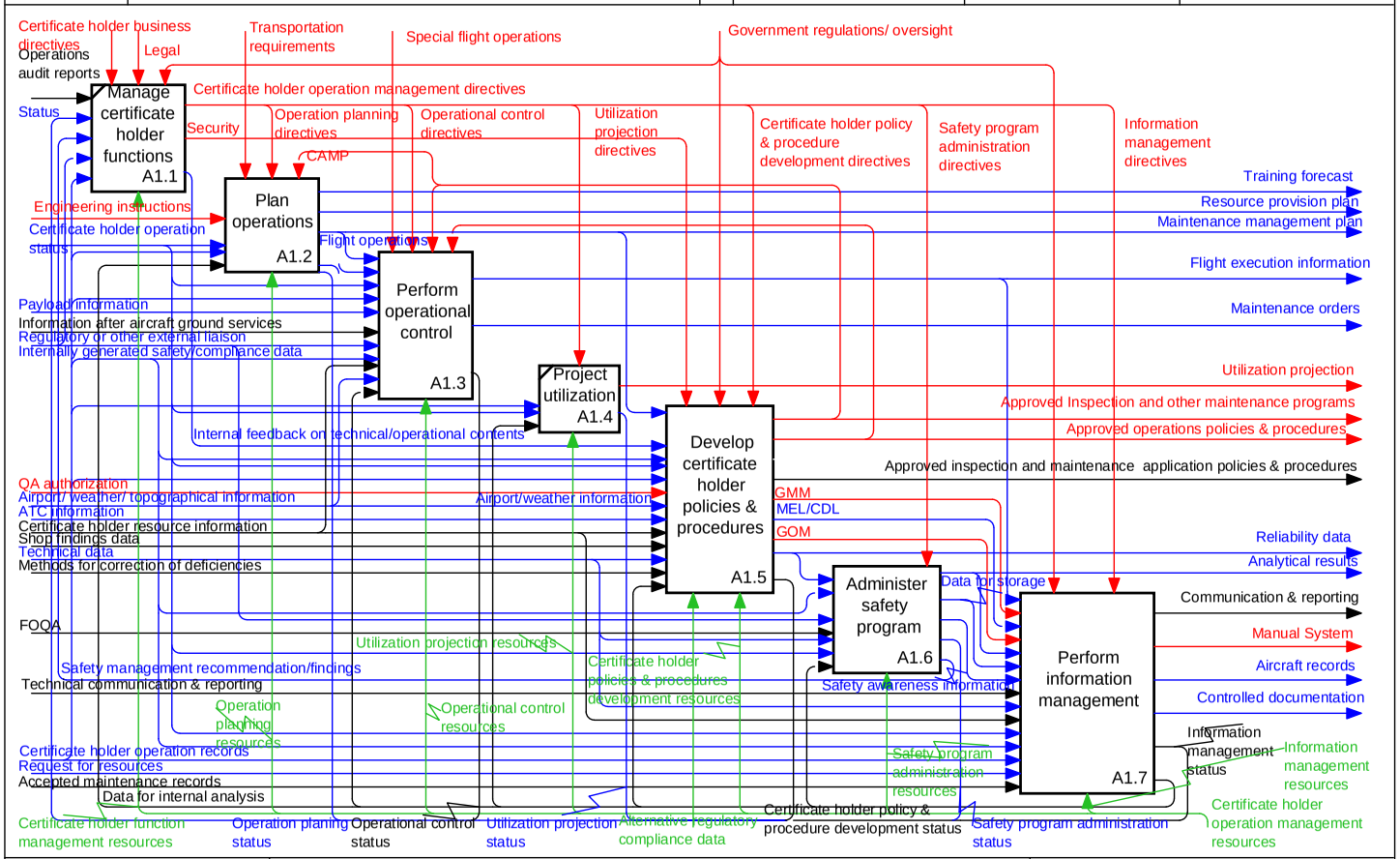

NODE:	TITLE:	NUMBER:
A1	Manage certificate holder operations	P. 3

5.3 A1—MANAGE CERTIFICATE HOLDER OPERATIONS.

5.3.1 A1.1—Manage Certificate Holder Functions.

This function controls and provides guidelines for certificate holder operations when changes occur in a certificate holder's fleet size, composition, flight routes, or utilization and in its support systems, management, and operations.

This function also provides directives and defines requirements and controls for the execution of other management functions to ensure their execution is consistent with business changes and recognized deficiencies.

5.3.2 A1.2—Plan Operations.

This function produces plans for the execution of certificate holder operations including:

- Flight operations
- Maintenance management plan
- Resource provision plan
- Personnel training plan

5.3.3 A1.3—Perform Operational Control.

Operational control, with respect to a flight, means the exercise of authority over initiating, conducting, or terminating a flight (14 CFR Part 1). This function makes those decisions and performs those actions on a daily basis that are necessary to operate flights safely and in compliance with the regulations. Operational control functions include, but are not limited to, the following:

- Crewmembers and aircraft scheduling
- Accepting charter flights
- Reviewing weather and Notices To Airmen
- Flight planning

Information that needs to be collected and disseminated to plan and conduct a flight safely includes, but is not limited to, the following:

- Enroute and terminal weather conditions
- Fuel requirements
- Navigation
- Airport facilities

This function supplies a real-time control over release of resources and direction of activities required for flight operations both prior to dispatch and during the flight.

5.3.4 A1.4—Project Utilization.

This function provides estimates or requirements for the utilization of assets and develops the utilization plan.

5.3.5 A1.5—Develop Certificate Holder Policies & Procedures.

This function develops or revises certificate holder policies and procedures related to operations, maintenance, training, resource provision, and administration to regulate the execution of certificate holder business. Examples of those policies and procedures may include the General Maintenance Manual (GMM), General Operations Manual (GOM), Continuous Airworthiness Maintenance Program (CAMP), Approved Aircraft Inspection Program (AAIP), (Minimum Equipment List) MEL/Configuration Deviation List (CDL), Continuing Analysis Surveillance Systems (CASS), reliability programs, training policies and procedures, and others.

5.3.6 A1.6—Administer Safety Program.

This function collects and analyzes information for dissemination within the certificate holder for the purpose of identifying and mitigating risks. This may include risk assessment of the 14 CFR Part 135 certificate holder. It is not regulatory requirement for a 14 CFR Part 135 certificate holder to have a safety program. Safety Management Systems will be addressed under this function when it becomes a regulatory requirement.

5.3.7 A1.7—Perform Information Management.

This information management function collects, organizes, stores, and reports or disseminates information within the certificate holder or maintains the records generated during the certificate holder operations for reporting to the FAA or other third parties.

USED AT:	AUTHOR: Part 135 Modeling Team	DATE: 10/1/2008	WORKING	READER	DATE	CONTEXT:
	PROJECT: Part 135 Certificate Holder Functional Model	REV: 1/16/2009	DRAFT			
			RECOMMENDED			
	NOTES: 1 2 3 4 5 6 7 8 9 10		PUBLICATION			A1

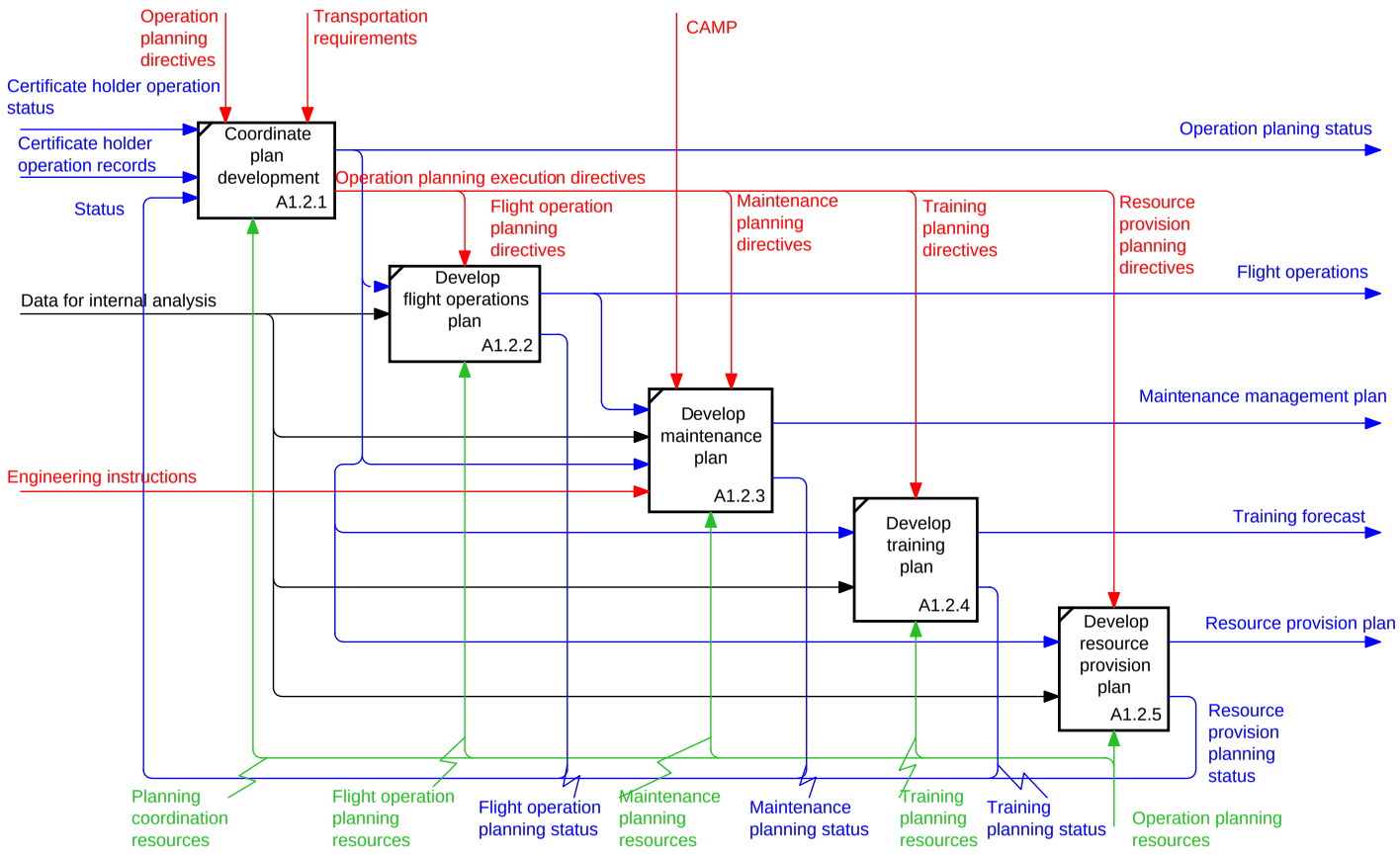

NODE:	TITLE:	NUMBER:
A1.2	Plan operations	P.4

5.4 A1.2—PLAN OPERATIONS.

5.4.1 A1.2.1—Coordinate Plan Development.

This function directs, schedules, and coordinates the following activities of the development of operations plans in a manner consistent with company management goals and regulations:

- Develop flight operations plan
- Develop maintenance management plan
- Develop training plan
- Develop resource provision plan

It provides directives and defines requirements and controls in accordance with company policies and procedures and any required regulations for these activities.

5.4.2 A1.2.2—Develop Flight Operations Plan.

This function develops the flight schedule based on operational information. This function also advises on the availability of resources to support planned activities.

5.4.3 A1.2.3—Develop Maintenance Plan.

This function develops the maintenance management plan based on the approved inspection and other maintenance programs. This function also advises on the availability of resources to support planned directives, i.e., engineering.

5.4.4 A1.2.4—Develop Training Plan.

This function develops a training plan based on the demand for training. This may include the training required by regulations and any other training deemed necessary by 14 CFR Part 135 certificate holders to fulfill operational needs.

5.4.5 A1.2.5—Develop Resource Provision Plan.

This function develops the resource provision plan that identifies resource requirements to support planned activities, such as:

- Facilities
- Personnel
- Tooling
- Required aircraft
- Materials

USED AT:	AUTHOR: Part 135 Modeling Team	DATE: 10/1/2008	WORKING	READER	DATE	CONTEXT:
	PROJECT: Part 135 Certificate Holder Functional Model	REV: 1/16/2009	DRAFT			
			RECOMMENDED			
	NOTES: 1 2 3 4 5 6 7 8 9 10		PUBLICATION			A1

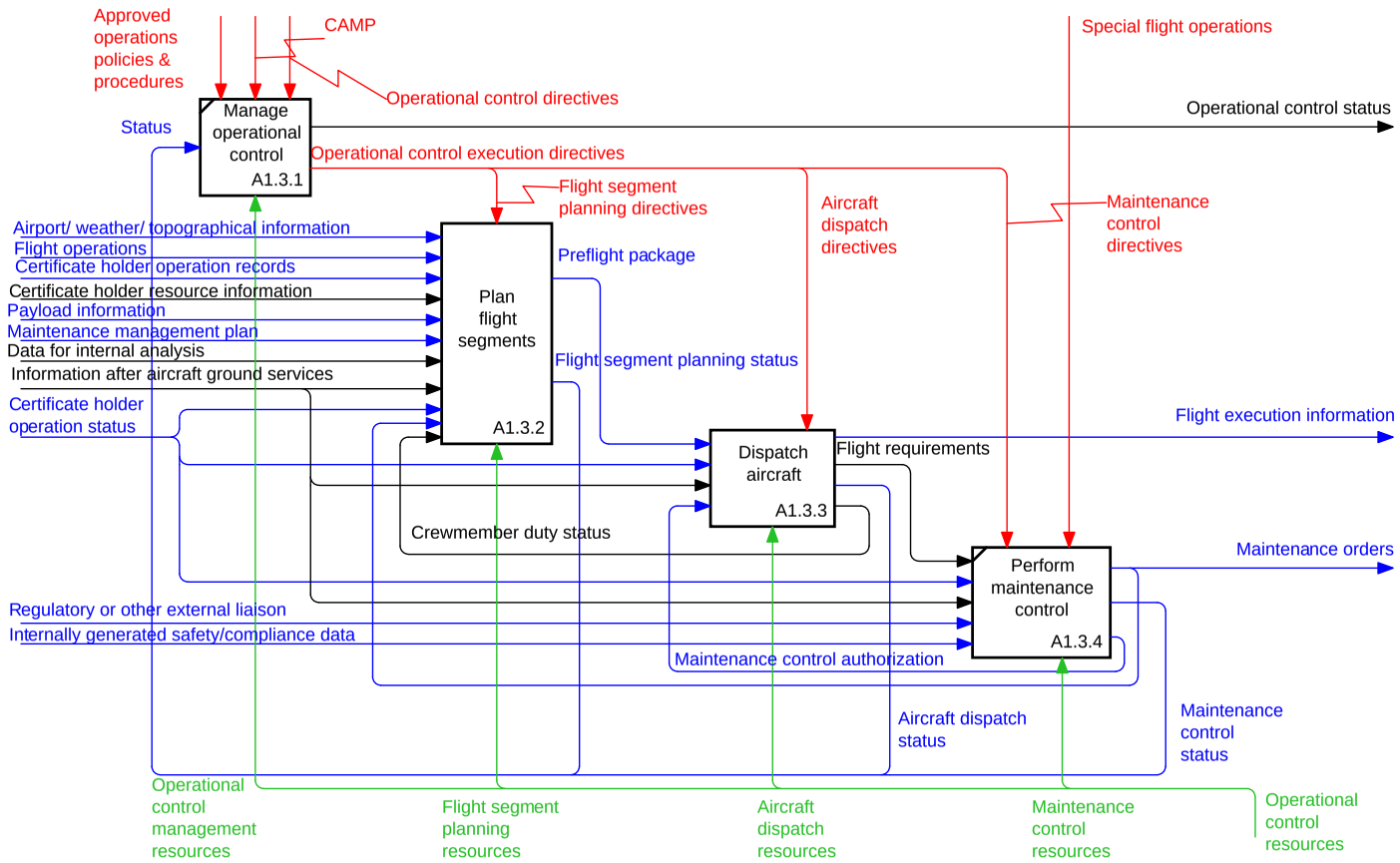

NODE:	TITLE:	NUMBER:
A1.3	Perform operational control	P. 5

5.5 A1.3—PERFORM OPERATIONAL CONTROL.

5.5.1 A1.3.1—Manage Operational Control.

This function directs, schedules, and coordinates the following activities of operational control:

- Plan flight segments
- Dispatch aircraft
- Perform maintenance control

This function ensures that proving runs and evacuation demonstrations are accomplished, if required.

It provides directives, defines requirements and controls for the execution of those activities, and ensures that the execution is accomplished in accordance with company policies and procedures and any required regulations for these activities.

5.5.2 A1.3.2—Plan Flight Segments.

This function conducts preflight planning to ensure that flights are conducted according to a specific route:

- to the standards of navigational accuracy required in the airspace traversed.
- to meet regulatory fuel requirements.
- to meet aircraft performance (e.g., MEL restrictions) and special operations and altitude regulatory requirements.
- to satisfy ATC compliance and reporting requirements.
- to ensure arrangements for international flights, i.e., overflight clearance.
- to ensure that flights are operated safely.

As a result of the preflight planning, a paper document or an electronic data file is created called the “flight plan” that consists of selecting an appropriate aircraft cruise schedule and applying forecast wind, temperature, and aircraft performance data to a planned route to predict estimated time enroute and estimated fuel consumption.

5.5.3 A1.3.3—Dispatch Aircraft.

This function schedules and assigns aircraft to perform specific flight tasks and flight locating requirements.

5.5.4 A1.3.4—Perform Maintenance Control.

This function provides controls on the airworthiness of an aircraft and issues the maintenance release to permit aircraft to be dispatched. This function coordinates the provisions of maintenance resources, such as tools, equipment, parts, and supplies. Decisions about whether to continue or divert flights and repair or defer discrepancies are also provided by this functional element. This function also coordinates maintenance information between the certificate holder and contract maintenance organizations.

USED AT:	AUTHOR: Part 135 Modeling Team	DATE: 10/1/2008	WORKING	READER	DATE	CONTEXT:
	PROJECT: Part 135 Certificate Holder Functional Model	REV: 10/5/2009	DRAFT			
			RECOMMENDED			
	NOTES: 1 2 3 4 5 6 7 8 9 10		PUBLICATION			A1.3

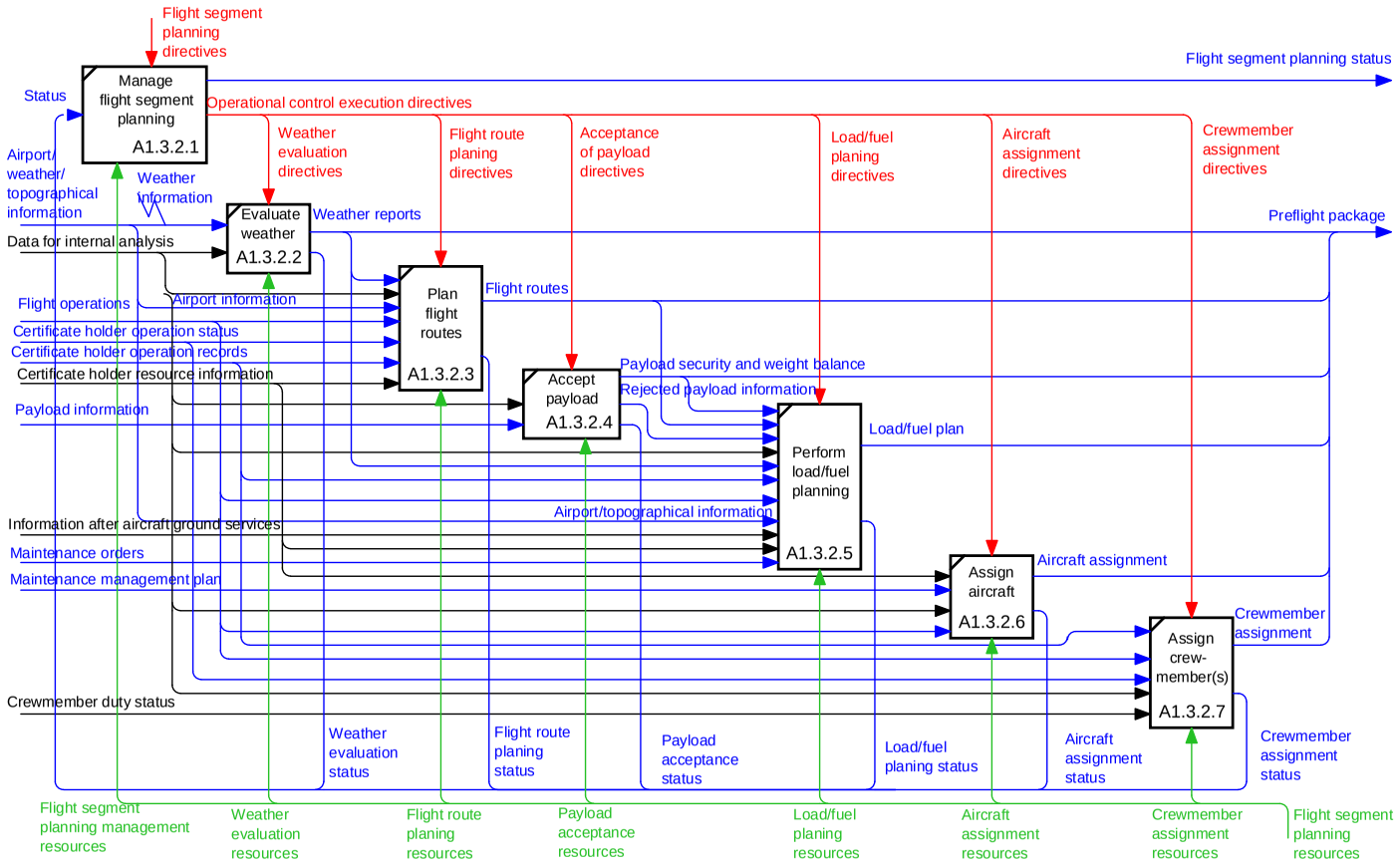

NODE:	TITLE:	NUMBER:
A1.3.2	Plan flight segments	P. 6

5.6 A1.3.2—PLAN FLIGHT SEGMENTS.

5.6.1 A1.3.2.1—Manage Flight Segment Planning.

This function directs, schedules, and coordinates the following activities of flight segment planning:

- Evaluate weather
- Plan flight routes
- Accept payload
- Perform load/fuel planning
- Assign aircraft
- Assign crewmembers

It provides directives, defines requirements and controls for the execution of those activities, and ensures that the execution is accomplished in accordance with company policies and procedures and any required regulations for these activities.

5.6.2 A1.3.2.2—Evaluate Weather.

This function collects, interprets, and disseminates weather information.

5.6.3 A1.3.2.3—Plan Flight Routes.

This function considers all factors, such as wind, temperature, and aircraft performance data, to plan the flight route for specific aircraft.

5.6.4 A1.3.2.4—Accept Payload.

This function captures information for processing payload acceptance. This includes information related to:

- Passengers and their carry-on bags
- Nonrevenue passengers
- Jump seats
- Cargo, mail
- Company-owned material (COMAT)
- Dangerous goods

- Passengers with disabilities, including service animals
- Animals
- Others

5.6.5 A1.3.2.5—Perform Load/Fuel Planning.

This function plans the payload. This includes securing the payload and handling dangerous goods and fuel for the flight based on the operational requirements, such as:

- Zero fuel restrictions
- Landing weight restrictions
- Cargo position/security
- Shear weight
- Structural takeoff weight
- Airport and route-specific restrictions
- Others, as defined in Approved Flight Manual (AFM)

5.6.6 A1.3.2.6—Assign Aircraft.

This function considers and determines the specific aircraft tail number that should be assigned to a specific route. This also includes necessary supplies, i.e., forms, over-water equipment, etc.

5.6.7 A1.3.2.7—Assign Crewmember(s).

Crewmember refers to a person assigned to perform a duty in an aircraft during flight time (14 CFR Part 1). This function schedules and assigns crewmembers to perform specific flight tasks. Some examples include:

- Flight and duty time
- Crewmember qualifications
- Specific conditions operations, such as category II (CAT II) and category III (CAT III)
- Special requirements, such as crew pairing, special airports, and required number of cabin crew

USED AT:	AUTHOR: Part 135 Modeling Team	DATE: 10/1/2008	WORKING	READER	DATE	CONTEXT:
	PROJECT: Part 135 Certificate Holder Functional Model	REV: 10/7/2009	DRAFT			
			RECOMMENDED			
	NOTES: 1 2 3 4 5 6 7 8 9 10		PUBLICATION			A1.3

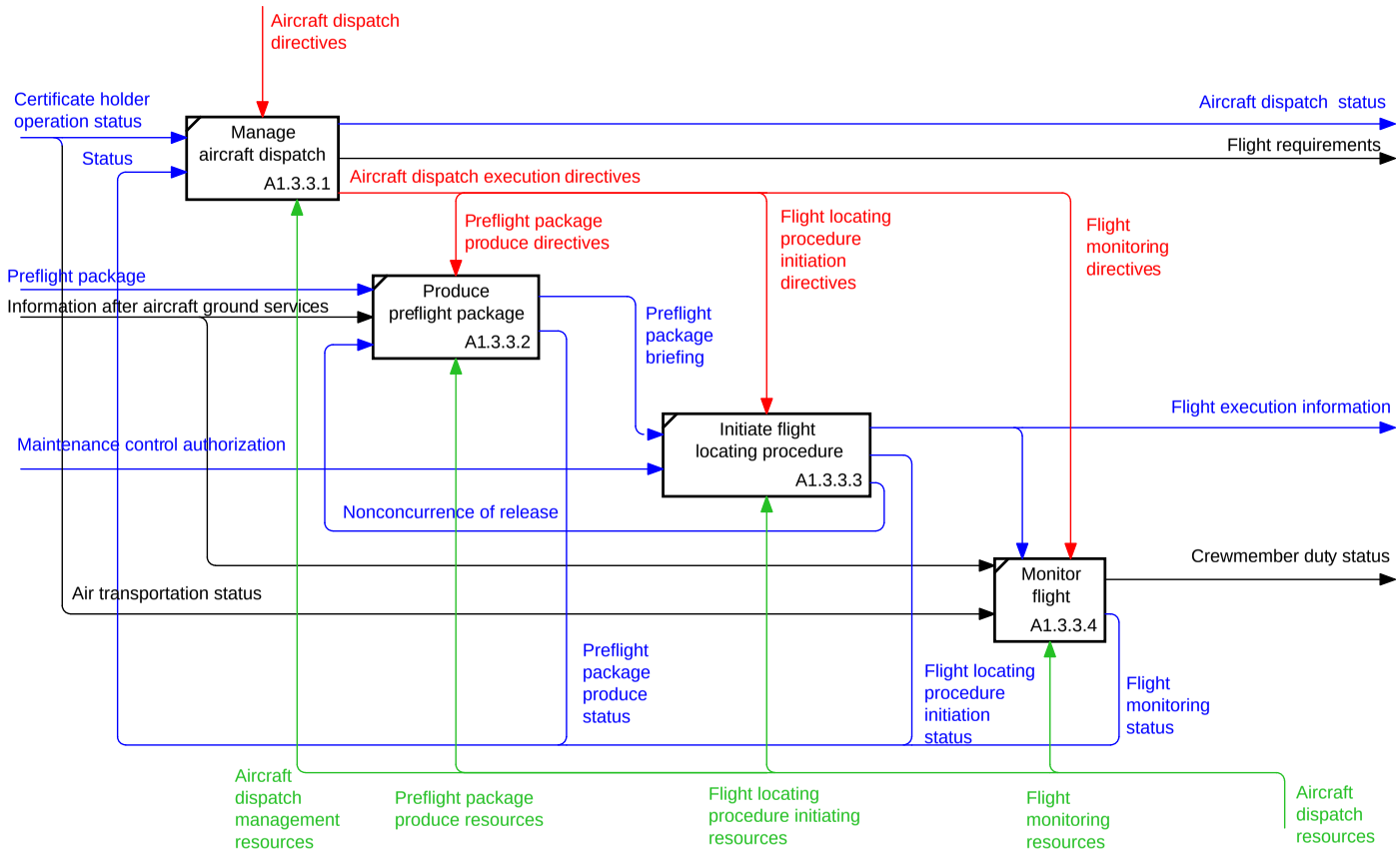

NODE:	TITLE:	NUMBER:
A1.3.3	Dispatch aircraft	P. 7

5.7 A1.3.3—DISPATCH AIRCRAFT.

5.7.1 A1.3.3.1—Manage Aircraft Dispatch.

This function directs, schedules, and coordinates the following activities of aircraft dispatch:

- Produce preflight package
- Initiate flight locating procedure
- Monitor flight

It provides directives, defines requirements and controls for the execution of those activities, and ensures that the execution is accomplished in accordance with company policies and procedures and any required regulations for these activities.

5.7.2 A1.3.3.2—Produce Preflight Package.

This function produces a data package that contains the flight plan, dispatch/flight location, load management, and other supporting information.

5.7.3 A1.3.3.3—Initiate Flight Locating Procedure.

This function refers to the 14 CFR Part 135 requirements that both the aircraft dispatcher and the pilot-in-command (PIC) sign the dispatch release before flight. The signatures certify that, in the judgment of each, the flight can be made safely as planned. Pilots follow the approved procedure for dispatching and releasing the aircraft. This involves planning to initiate the flight.

In case of flight release, the PIC alone signs the document before the flight (in the case of supplemental operations).

5.7.4 A1.3.3.4—Monitor Flight.

This function refers to the need for monitoring the progress of each flight under the dispatcher’s control from its point of origin to landing at the destination, including arrivals and departures from intermediate stops.

USED AT:	AUTHOR: Part 135 Modeling Team	DATE: 10/1/2008	WORKING	READER	DATE	CONTEXT:
	PROJECT: Part 135 Certificate Holder Functional Model	REV: 1/16/2009	DRAFT			
			RECOMMENDED			
	NOTES: 1 2 3 4 5 6 7 8 9 10		PUBLICATION			A1

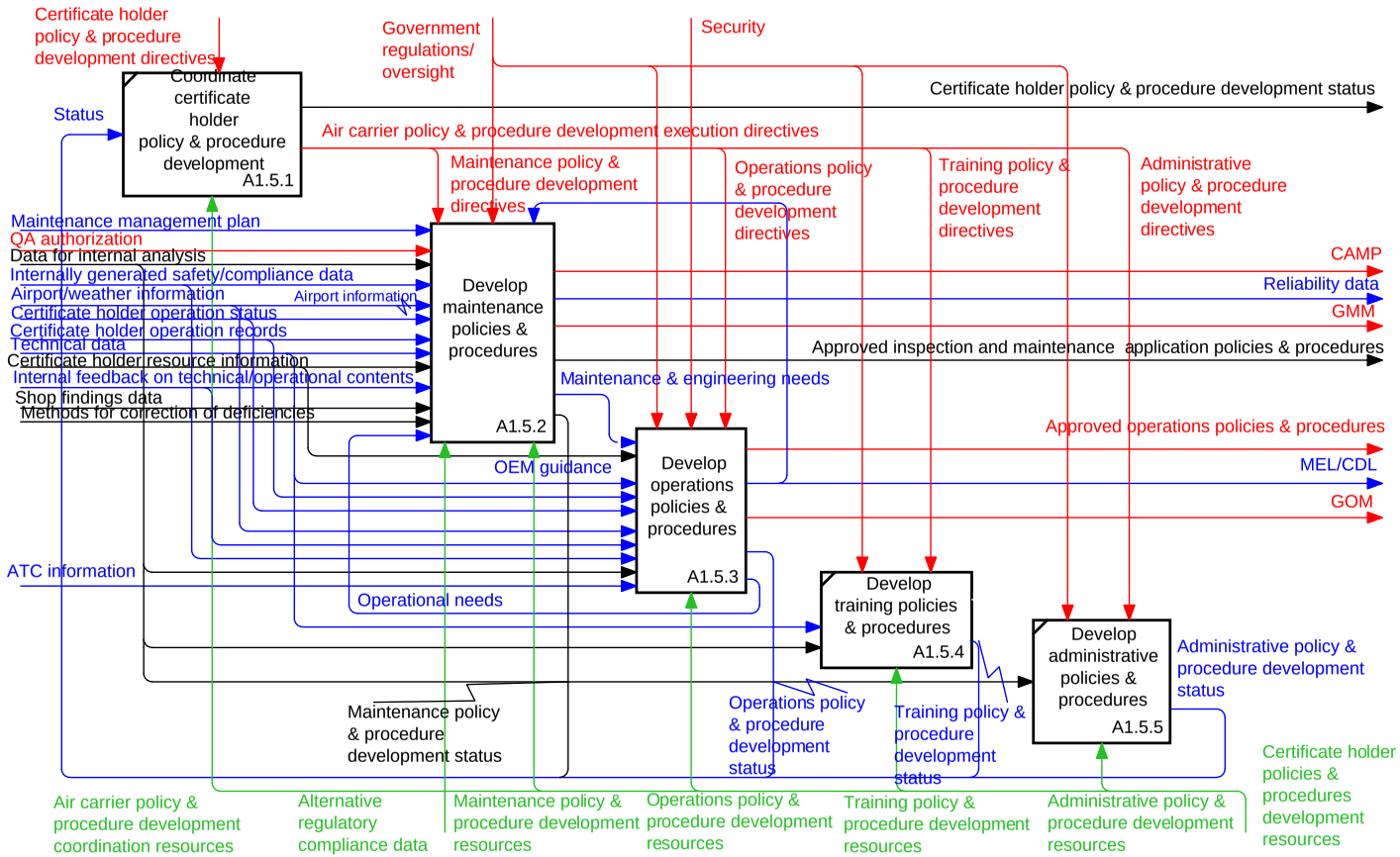

NODE:	TITLE:	NUMBER:
A1.5	Develop certificate holder policies & procedures	P. 8

5.8 A1.5—DEVELOP CERTIFICATE HOLDER POLICIES & PROCEDURES.

5.8.1 A1.5.1—Coordinate Certificate Holder Policy & Procedure Development.

This function directs, schedules, and coordinates the following activities of certificate holder policy & procedure development.

- Develop maintenance policies & procedures
- Develop operation policies & procedures
- Develop training policies & procedures
- Develop administrative policies & procedures

It provides directives, defines requirements and controls for the execution of those activities, and ensures that the execution is accomplished in accordance with company policies and procedures and any required regulations for these activities.

5.8.2 A1.5.2—Develop Maintenance Policies & Procedures.

This function provides maintenance management controls by providing standardized policies and procedures and by disseminating these directives to company organizations and contractors.

This may include CASS, reliability programs, etc.

5.8.3 A1.5.3—Develop Operations Policies & Procedures.

This function provides operations management controls by providing standardized policies and procedures and by disseminating these directives to company organizations and contractors. The MEL manual is also developed in this function.

5.8.4 A1.5.4—Develop Training Policies & Procedures.

This function provides personnel training controls by providing standardized policies and procedures and by disseminating these directives to company organizations and contractors.

5.8.5 A1.5.5—Develop Administrative Policies & Procedures.

This function provides administrative controls by providing standardized policies and procedures. This may include dress code, leave policy, retirement policy, work hours, pay and benefits, and others by disseminating these directives to company organizations and contractors.

USED AT:	AUTHOR: Part 135 Modeling Team	DATE: 10/1/2008	WORKING	READER	DATE	CONTEXT:
	PROJECT: Part 135 Certificate Holder Functional Model	REV: 1/16/2009	DRAFT			
			RECOMMENDED			
	NOTES: 1 2 3 4 5 6 7 8 9 10		PUBLICATION			A1.5

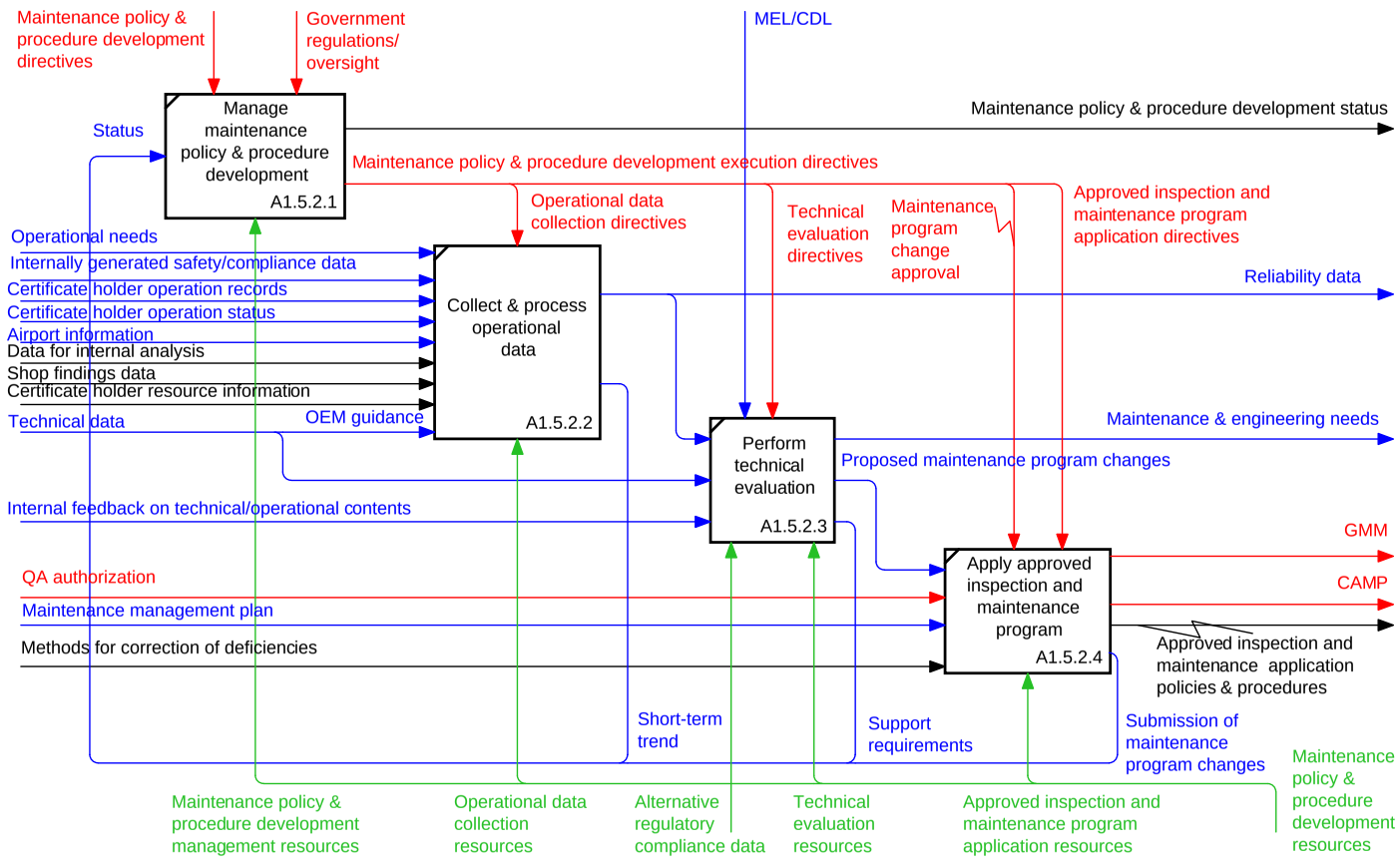

NODE:	TITLE:	NUMBER:
A1.5.2	Develop maintenance policies & procedures	P. 9

5.9 A1.5.2—DEVELOP MAINTENANCE POLICIES & PROCEDURES.

5.9.1 A1.5.2.1—Manage Maintenance Policy & Procedure Development.

This function directs, schedules, and coordinates the following activities of maintenance policy and procedure development:

- Collect and process operational data
- Perform technical evaluation
- Apply approved inspection and maintenance program

It provides directives, defines requirements and controls for the execution of those activities, and ensures that the execution is accomplished in accordance with company policies and procedures and any required regulations for these activities.

5.9.2 A1.5.2.2—Collect & Process Operational Data.

This function obtains operational data, which may include Mechanical Interruption Summary (MIS) reports, pilot reports, MEL usage, Service Difficulty Reports (SDR), etc., and organizes the data for action as required, e.g., adjustments to maintenance programs based on reliability information to generate emergency orders and maintenance orders.

5.9.3 A1.5.2.3—Perform Technical Evaluation.

This function evaluates reliability data, if applicable, and other data, including exemptions, deviations, and waivers to propose maintenance program actions.

5.9.4 A1.5.2.4—Apply Approved Inspection and Maintenance Program.

This function applies proposed maintenance program changes on the operations of certificate holders, including publishing and disseminating the proposed changes after regulatory review.

USED AT:	AUTHOR: Part 135 Modeling Team	DATE: 10/1/2008	WORKING	READER	DATE	CONTEXT:
	PROJECT: Part 135 Certificate Holder Functional Model	REV: 1/16/2009	DRAFT			
			RECOMMENDED			
	NOTES: 1 2 3 4 5 6 7 8 9 10		PUBLICATION			A1.5

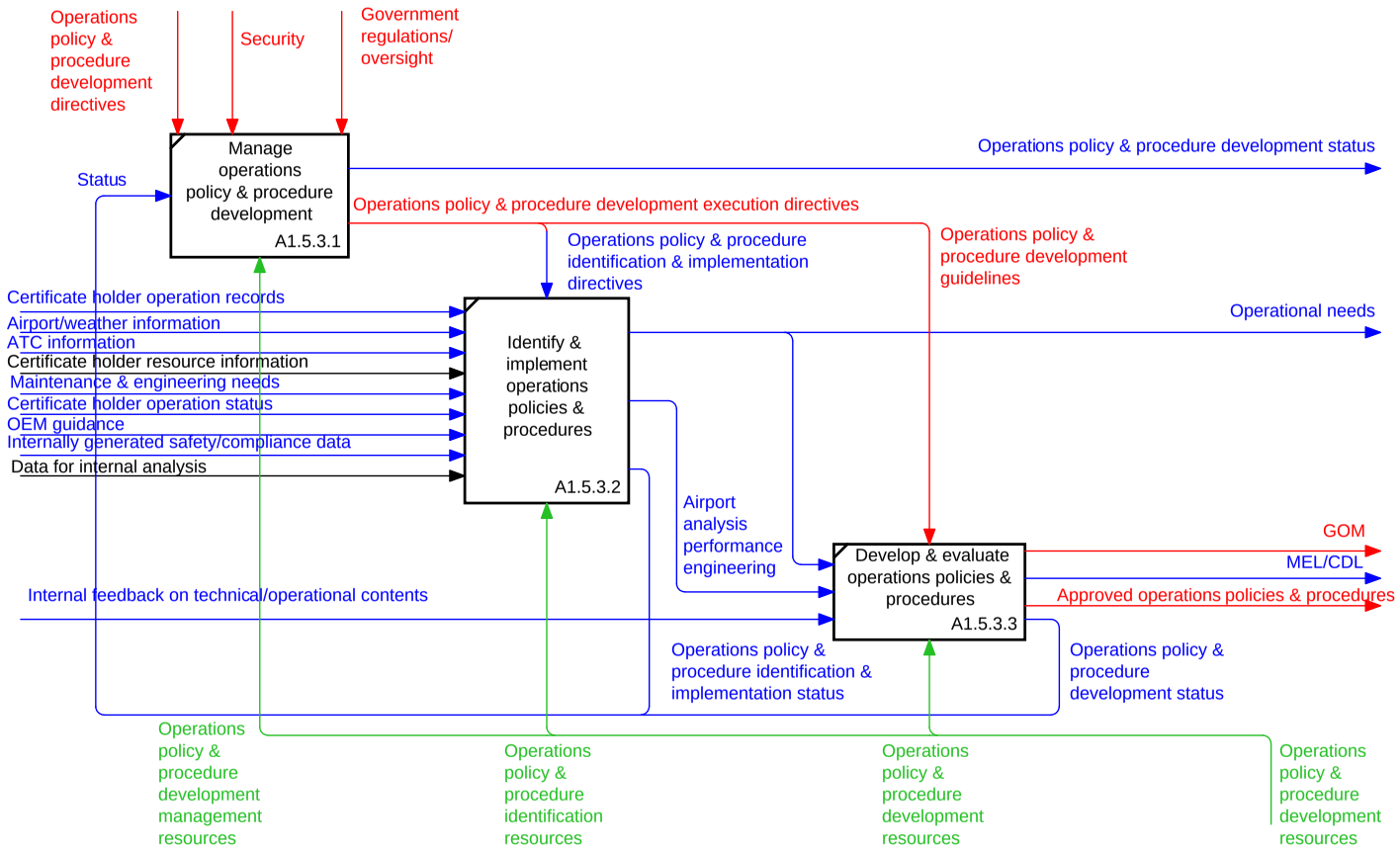

NODE:	TITLE:	NUMBER:
A1.5.3	Develop operations policies & procedures	P. 10

5.10 A1.5.3—DEVELOP OPERATIONS POLICIES & PROCEDURES.

5.10.1 A1.5.3.1—Manage Operations Policy & Procedure Development.

This function directs, schedules, and coordinates the following activities of operational policy and procedure development:

- Identify and effect operations policies and procedures
- Develop and evaluate operations policies and procedures

It provides directives, defines requirements and controls for the execution of those activities, and ensures that the execution is accomplished in accordance with company policies and procedures and any relevant regulations for these activities.

5.10.2 A1.5.3.2—Identify & Implement Operations Policies & Procedures.

This function analyzes the management control of the certificate holder operations and identifies the necessary operational needs to address the operations policy issues to include aircraft and personnel.

5.10.3 A1.5.3.3—Develop & Evaluate Operations Policies & Procedures.

This function assesses the operational needs of certificate holder operations and implements, including publishing and disseminating, the policies and procedures including human resource issues.

USED AT:	AUTHOR: Part 135 Modeling Team	DATE: 10/1/2008	WORKING	READER	DATE	CONTEXT:
	PROJECT: Part 135 Certificate Holder Functional Model	REV: 1/16/2009	DRAFT			
			RECOMMENDED			
	NOTES: 1 2 3 4 5 6 7 8 9 10		PUBLICATION			A1

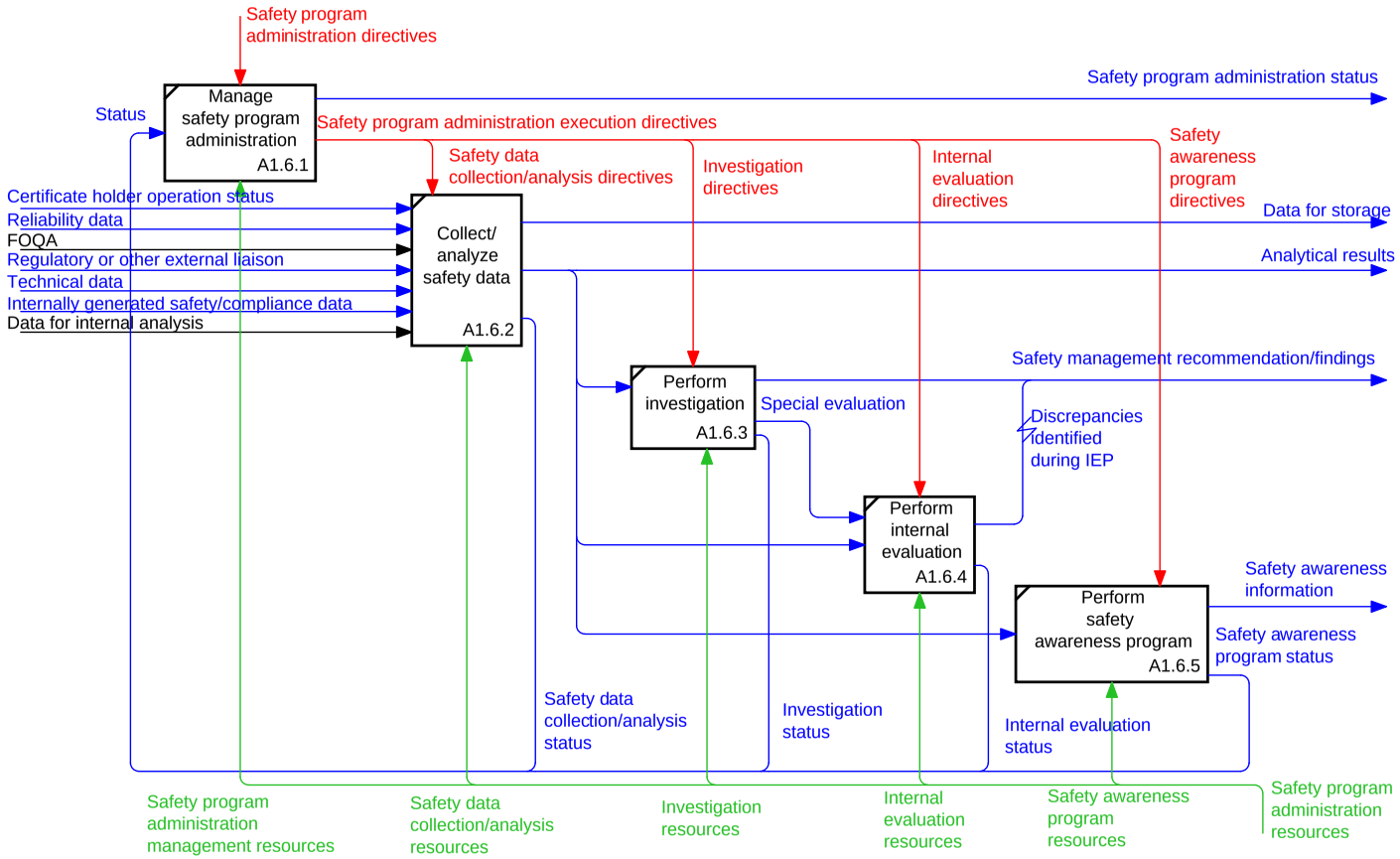

NODE:	TITLE:	NUMBER:
A1.6	Administer safety program	P.11

5.11 A1.6—ADMINISTER SAFETY PROGRAM.

5.11.1 A1.6.1—Manage Safety Program Administration.

This function directs, schedules, and coordinates the following activities of safety program administration in a manner consistent with company management goals:

- Collect and analyze safety data
- Perform investigation
- Perform internal evaluation
- Perform safety awareness program

It provides directives and defines requirements and controls in accordance with company policies and procedures and any required regulations for these activities.

5.11.2 A1.6.2—Collect/Analyze Safety Data.

This function collects and analyzes information for dissemination within the certificate holders for the purpose of identifying and mitigating risks. That information also serves as the basis for risk assessment by the senior leadership.

5.11.3 A1.6.3—Perform Investigation.

This function involves fact findings, interviews, and cause-effect analysis of circumstances surrounding an incident, accident, or failure; as a result of this, the root cause of accident, incident, or failure is determined and recommendations are issued.

5.11.4 A1.6.4—Perform Internal Evaluation.

This function uses a systematic approach to identify the certificate holder's deficiencies or areas needing improvement. This is accomplished using the following methods:

- Observations
- Records audit
- Interview of personnel
- Scheduled or special evaluations

This function addresses operational areas such as flight operations, maintenance functions, technical operations, dispatch, ground operations, security, and in-flight services.

5.11.5 A1.6.5—Perform Safety Awareness Program.

This function serves to disseminate safety communications, such as:

- Safety bulletins
- Recommendations
- Lesson learned
- Posters
- Safety recognition program
- Safety committee minutes and recommendations

USED AT:	AUTHOR: Part 135 Modeling Team	DATE: 10/1/2008	WORKING	READER	DATE	CONTEXT:
	PROJECT: Part 135 Certificate Holder Functional Model	REV: 1/16/2009	DRAFT			
			RECOMMENDED			
	NOTES: 1 2 3 4 5 6 7 8 9 10		PUBLICATION			A1

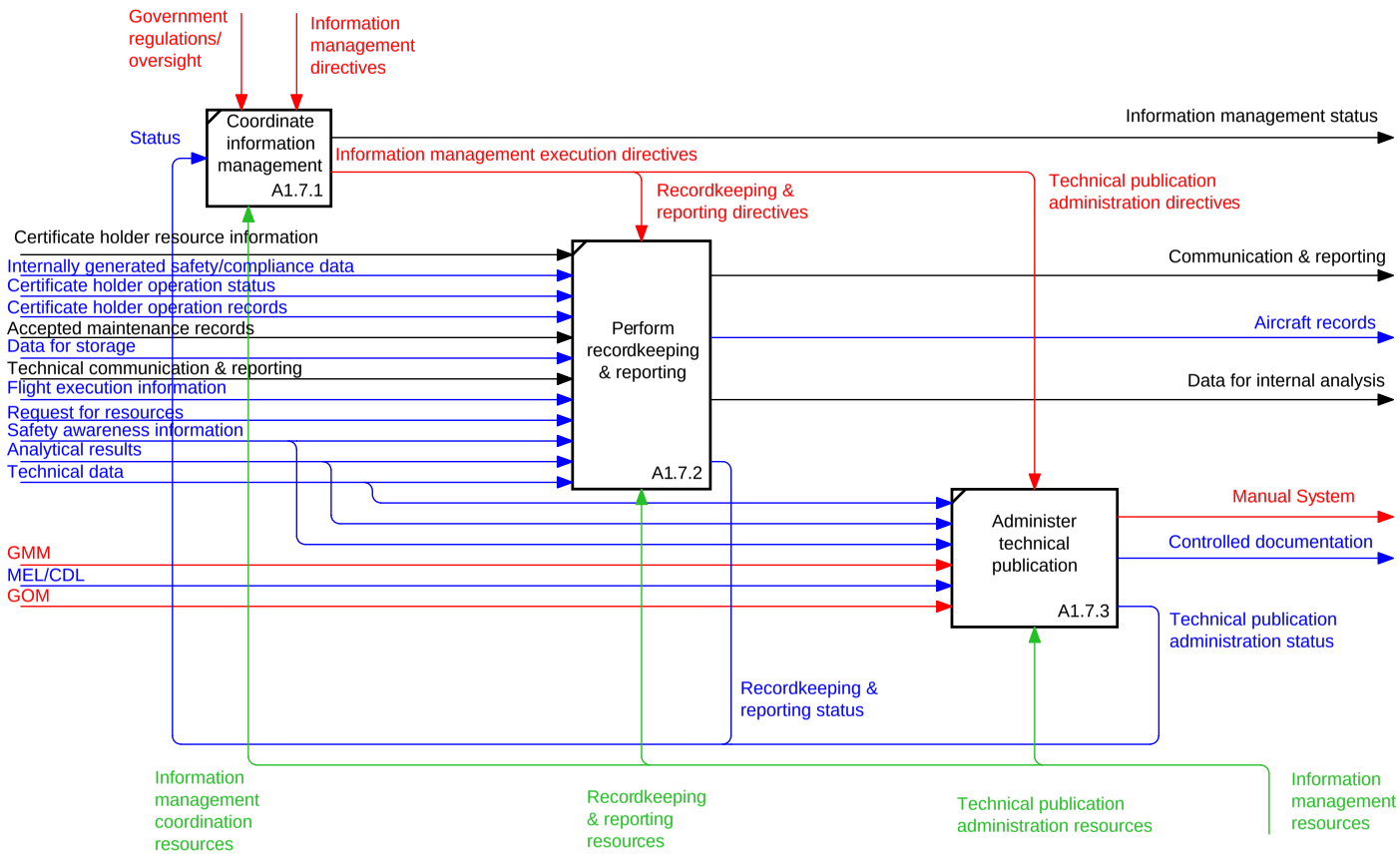

NODE:	TITLE:	NUMBER:
A1.7	Perform information management	P. 12

5.12 A1.7—PERFORM INFORMATION MANAGEMENT.

5.12.1 A1.7.1—Coordinate Information Management.

This function directs, schedules, and coordinates the following activities of information management:

- Perform recordkeeping & reporting
- Administer technical publications/controlled documents

It provides directives, defines requirements and controls for the execution of those activities, and ensures that the execution is accomplished in accordance with company policies and procedures and any relevant regulations for these activities.

5.12.2 A1.7.2—Perform Recordkeeping & Reporting.

This function stores raw data available for query/retrieval and for analytical/management functions.

5.12.3 A1.7.3—Administer Technical Publication.

This function collects and revises technical publications such as GMM, GOM, Flight Operations Manual (FOM), Flight Attendant Manuals, Maintenance Manuals, MELs, other technical publications, and technical data.

This function also reviews proposed changes and all other procedures and manuals that the change references to ensure conflict prevention or resolution.

The publications fall into the following categories:

- Approved/accepted
- Other controlled publications:
    - Government publications
        - CFRs
        - Advisory Circulars
        - Airworthiness Directive (AD)
        - Handbook bulletins

- Company bulletins
    - Maintenance alert bulletins
    - Flight crew letters

- Controlled publications
    - Newsletters
    - Magazine
    - Emails
    - Websites
    - Broadcast messages

The revision process includes:

- FAA-requested revisions
- Company manual revisions
- Processing/control customer manuals
- Distribution of revisions internal/external
- Revision tracking (i.e., acknowledge of electronic or manual receipt, etc.)
- Suggested revision (internal/external) to company manuals
- Electronic software revisions

USED AT:	AUTHOR: Part 135 Modeling Team	DATE: 10/1/2008	WORKING	READER	DATE	CONTEXT:
	PROJECT: Part 135 Certificate Holder Functional Model	REV: 1/16/2009	DRAFT			
			RECOMMENDED			
	NOTES: 1 2 3 4 5 6 7 8 9 10		PUBLICATION			A0

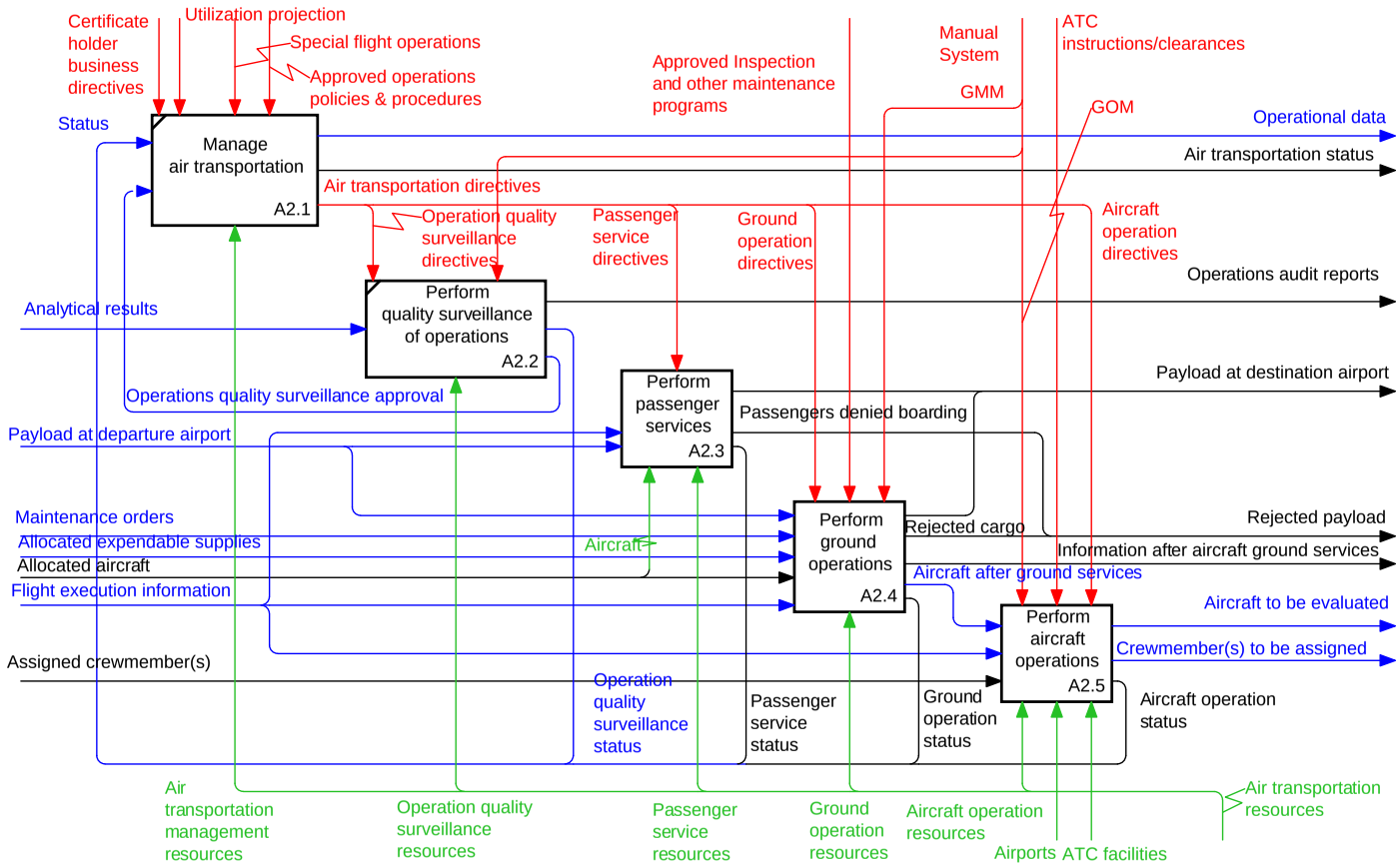

NODE:	TITLE:	NUMBER:
A2	Perform air transportation	P. 13

5.13 A2—PERFORM AIR TRANSPORTATION.

5.13.1 A2.1—Manage Air Transportation.

This function directs, schedules, and coordinates the following activities of air transportation:

- Perform quality surveillance of operations
- Perform passenger services
- Perform ground operations
- Perform aircraft operations

It provides directives, defines requirements and controls for the execution of those activities, and ensures that the execution is accomplished in accordance with company policies and procedures and any required regulations for these activities.

5.13.2 A2.2—Perform Quality Surveillance of Operations.

The quality surveillance of the functions approved by operations policies and procedures.

5.13.3 A2.3—Perform Passenger Services.

This function provides services for passengers, such as:

- Controlling the access to the aircraft
- Screening for carry-on baggage
- Checking for passenger regulatory compliance, i.e., smoking, seat belt, and exit row seating rules
- Briefing passengers
- Ensuring the safety of passengers during boarding, flight, and deplaning
- Performing flight attendant activities and responding to passengers

5.13.4 A2.4—Perform Ground Operations.

This function provides ground services to flight operations, including:

- Ground handling
- Cargo handling
- Consumables replenishment (e.g., fuel, emergency equipment, food, etc.)
- Line services
- Deicing/anti-icing services

5.13.5 A2.5—Perform Aircraft Operations.

This function operates and moves aircraft from the gate or blocks-out at the departure airport to the arrival at destination, until the aircraft comes to a complete stop at the gate or on the ramp. This function begins with the maintenance release with the aircraft available for passenger boarding/cargo loading and crewmember check-in, ready for preflight activity.

This activity includes:

- Predeparture ground operations
- Takeoff
- Climb
- Cruise
- Descent
- Approach
- Landing
- Postarrival ground operations

USED AT:	AUTHOR: Part 135 Modeling Team	DATE: 10/1/2008	WORKING	READER	DATE	CONTEXT:
	PROJECT: Part 135 Certificate Holder Functional Model	REV: 1/16/2009	DRAFT			
			RECOMMENDED			
	NOTES: 1 2 3 4 5 6 7 8 9 10		PUBLICATION			A2

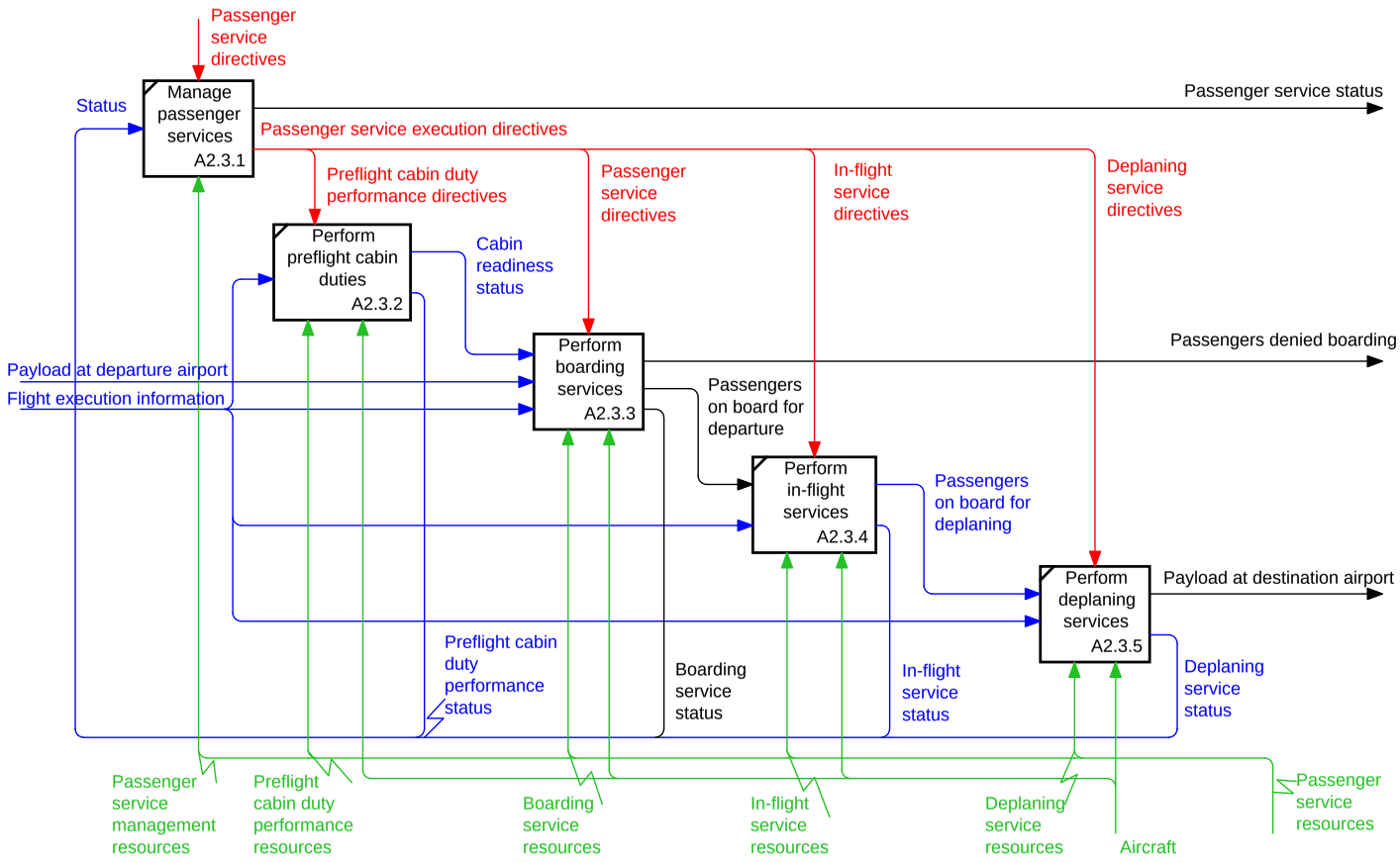

NODE:	TITLE:	NUMBER:
A2.3	Perform passenger services	P. 14

5.14 A2.3—PERFORM PASSENGER SERVICES.

5.14.1 A2.3.1—Manage Passenger Services.

This function directs, schedules, and coordinates the following activities of passenger services:

- Perform preflight cabin duties
- Perform boarding services
- Perform in-flight services
- Perform deplaning services

It provides directives, defines requirements and controls for the execution of those activities, and ensures that the execution is accomplished in accordance with company policies and procedures and any required regulations for these activities.

5.14.2 A2.3.2—Perform Preflight Cabin Duties.

This function includes all duties and responsibilities in cabin preparation, such as:

- Preflight of emergency equipment
- Preflight of communication panel
- Preflight of safety onboard cards, seat backs
- Preflight of galley equipment including catering supplies, if applicable
- Preflight of jump seat functionality
- Security search of cabin compartment including overhead bins
- Preflight of lavatory functionality including fire bottles
- PIC briefing with lead flight attendants and/or entire cabin crew, depending on the size of the flight, e.g., Crew Resource Management (CRM)

- Emergency briefing by lead attendant to cabin crew to include personal emergency equipment and assignment during emergencies
- Coordination of security
- Meal/beverage services, if applicable

5.14.3 A2.3.3—Perform Boarding Services.

This function boards passengers and includes, but is not limited to, the following activities:

- Check-in
- Security screening
- Screening of all baggage
- Checking for intoxicated passengers, exit-row seating compliance, passenger seatbelt compliance, and emergency procedures notification
- Seating services before aircraft leaves the gate for takeoff
- Passenger control for embarking/disembarking (cockpit access limits, smoking policies, etc.)
- Necessary announcements

This includes the passenger manifest to identify:

- Unaccompanied minors
- U.S. Air Marshals or gun-carrying law enforcement officers
- Pets
- Deportees
- Passengers with disabilities
- Mental patients

5.14.4 A2.3.4—Perform In-Flight Services.

This function provides passengers with the following services during the aircraft flight:

- Briefing passengers
- Controlling passengers during flight
- Storing of carry-on baggage
- Ensuring passenger regulatory compliance, i.e., portable electronic devices (PED), smoking, and seatbelt rules
- Securing cabin, i.e., arming doors, CRM

This process starts at the departure airport after all the doors of the aircraft are secured for departure and ends at the destination airport before the doors of the aircraft are opened for passenger/cargo deplaning. This function may only apply to 14 CFR Part 135 operations with ten or more passengers.

This includes the passenger manifest to identify:

- Unaccompanied minors
- U.S. Air Marshals or gun-carrying law enforcement officers
- Pets
- Deportees
- Passengers with disabilities
- Mental patients

5.14.5 A2.3.5—Perform Deplaning Services.

This function serves passengers by checking passenger compliance with signs, passenger safety on jetways/stairs, and abnormal or emergency evacuation requirements. This includes the passenger manifest to identify:

- Unaccompanied minors
- U.S. Air Marshals or gun-carrying law enforcement officers
- Pets
- Deportees
- Passengers with disabilities
- Mental patients

USED AT:	AUTHOR: Part 135 Modeling Team	DATE: 10/1/2008	WORKING	READER	DATE	CONTEXT:
	PROJECT: Part 135 Certificate Holder Functional Model	REV: 1/16/2009	DRAFT			
			RECOMMENDED			
	NOTES: 1 2 3 4 5 6 7 8 9 10		PUBLICATION			A2.3

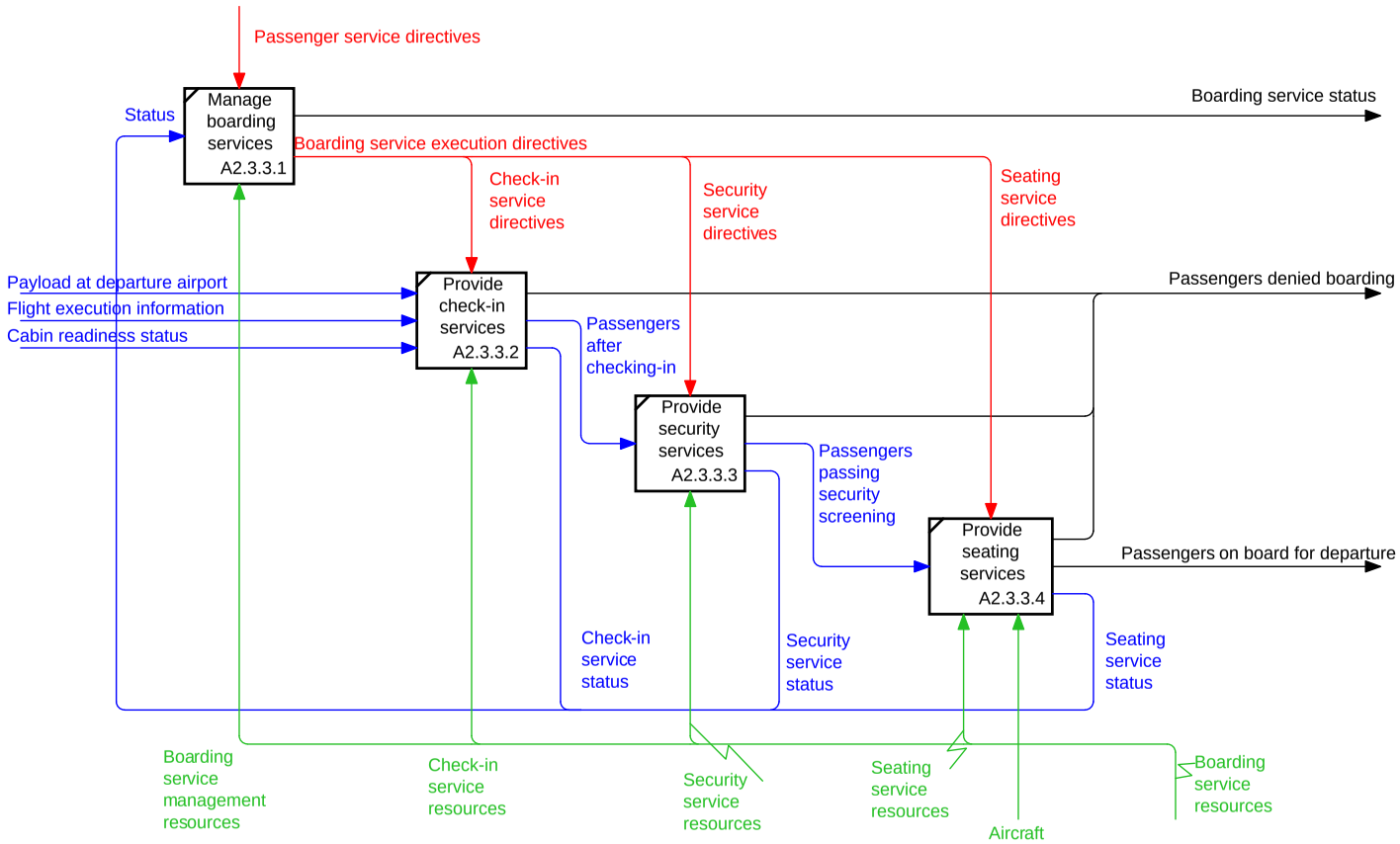

NODE:	TITLE:	NUMBER:
A2.3.3	Perform boarding services	P. 15

5.15 A2.3.3—PERFORM BOARDING SERVICES.

5.15.1 A2.3.3.1—Manage Boarding Services.

This function directs, schedules, and coordinates the following activities of passenger boarding services:

- Provide check-in services
- Provide security screening
- Provide seating services

It provides directives, defines requirements and controls for the execution of those activities, and ensures that the execution is accomplished in accordance with company policies and procedures and any required regulations for these activities.

5.15.2 A2.3.3.2—Provide Check-In Services.

This function captures the process of passenger boarding, which may include checking and registering the passenger's ticket and luggage and providing the passenger with a boarding pass indicating fight number, boarding gate, time, seat number, etc. This also includes security questions during passenger check-in.

5.15.3 A2.3.3.3—Provide Security Services.

This function refers to the security screening of passengers and carry-on baggage to ensure no weapons or other dangerous goods and materials are being brought onto the aircraft.

5.15.4 A2.3.3.4—Provide Seating Services.

This function serves passengers' needs for safe seating and luggage placement. This also includes assisting special-needs passengers, i.e., passengers with disabilities, pregnant passengers, infants, etc.

USED AT:	AUTHOR: Part 135 Modeling Team	DATE: 10/1/2008	WORKING	READER	DATE	CONTEXT:
	PROJECT: Part 135 Certificate Holder Functional Model	REV: 1/16/2009	DRAFT			
			RECOMMENDED			
	NOTES: 1 2 3 4 5 6 7 8 9 10		PUBLICATION			A2

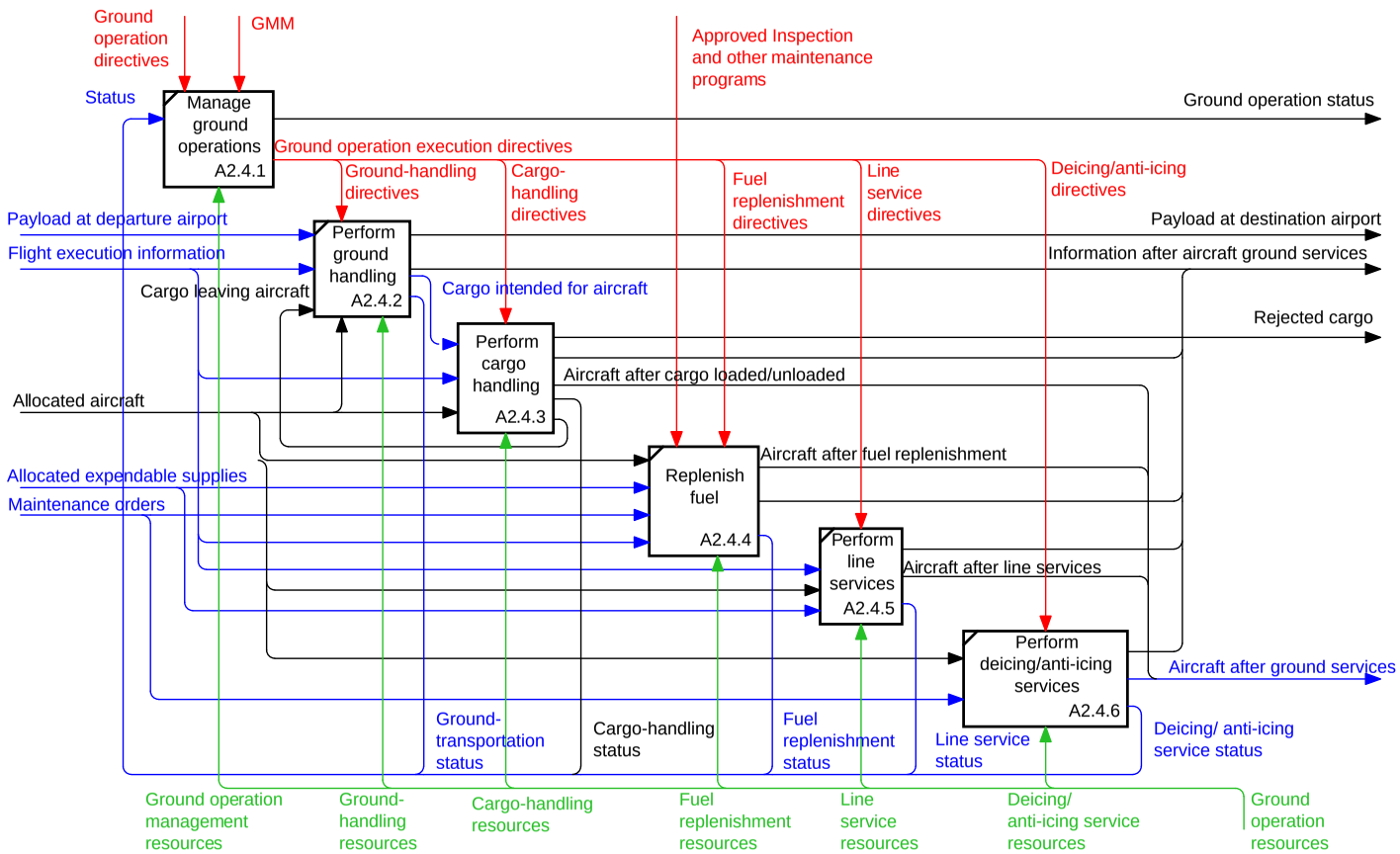

NODE:	TITLE:	NUMBER:
A2.4	Perform ground operations	P. 16

5.16 A2.4—PERFORM GROUND OPERATIONS.

5.16.1 A2.4.1—Manage Ground Operations.

This function directs, schedules, and coordinates the following activities of ground operations:

- Perform ground handling
- Perform cargo handling
- Replenish fuel
- Perform line services
- Perform deicing/anti-icing services

It provides directives, defines requirements and controls for the execution of those activities, and ensures that the execution is accomplished in accordance with company policies and procedures and any required regulations for these activities, i.e., self-audit.

5.16.2 A2.4.2—Perform Ground Handling.

This function uses airport ground equipment such as trucks, trailers, or transfer belts to move luggage/cargo from customers to the aircraft for loading or from the aircraft to customers for retrieval.

5.16.3 A2.4.3—Perform Cargo Handling.

This function moves cargo, including the handling of dangerous goods and COMAT, onto the aircraft for departure or from the aircraft after aircraft landing at the destination airport.

5.16.4 A2.4.4—Replenish Fuel.

This function fuels the aircraft before flight to meet the flight requirements.

5.16.5 A2.4.5—Perform Line Services.

This function, if applicable, provides cabin services and under-wing services for providing a clean, safe, and comfortable environment for passengers. The cabin services include providing passenger-briefing cards, cabin cleaning, food and drink supplies, passenger convenience items, commissary, etc. The under-wing services include potable water, lavatory services, etc.

Note: The line maintenance function covers the services performed by maintenance.

5.16.6 A2.4.6—Perform Deicing/Anti-Icing Services.

This function removes the ice/snow or provides anti-icing services prior to departure at the airport to ensure the safe operations of the aircraft.

USED AT:	AUTHOR: Part 135 Modeling Team	DATE: 10/1/2008	WORKING	READER	DATE	CONTEXT:
	PROJECT: Part 135 Certificate Holder Functional Model	REV: 1/16/2009	DRAFT			
			RECOMMENDED			
	NOTES: 1 2 3 4 5 6 7 8 9 10		PUBLICATION			A2.4

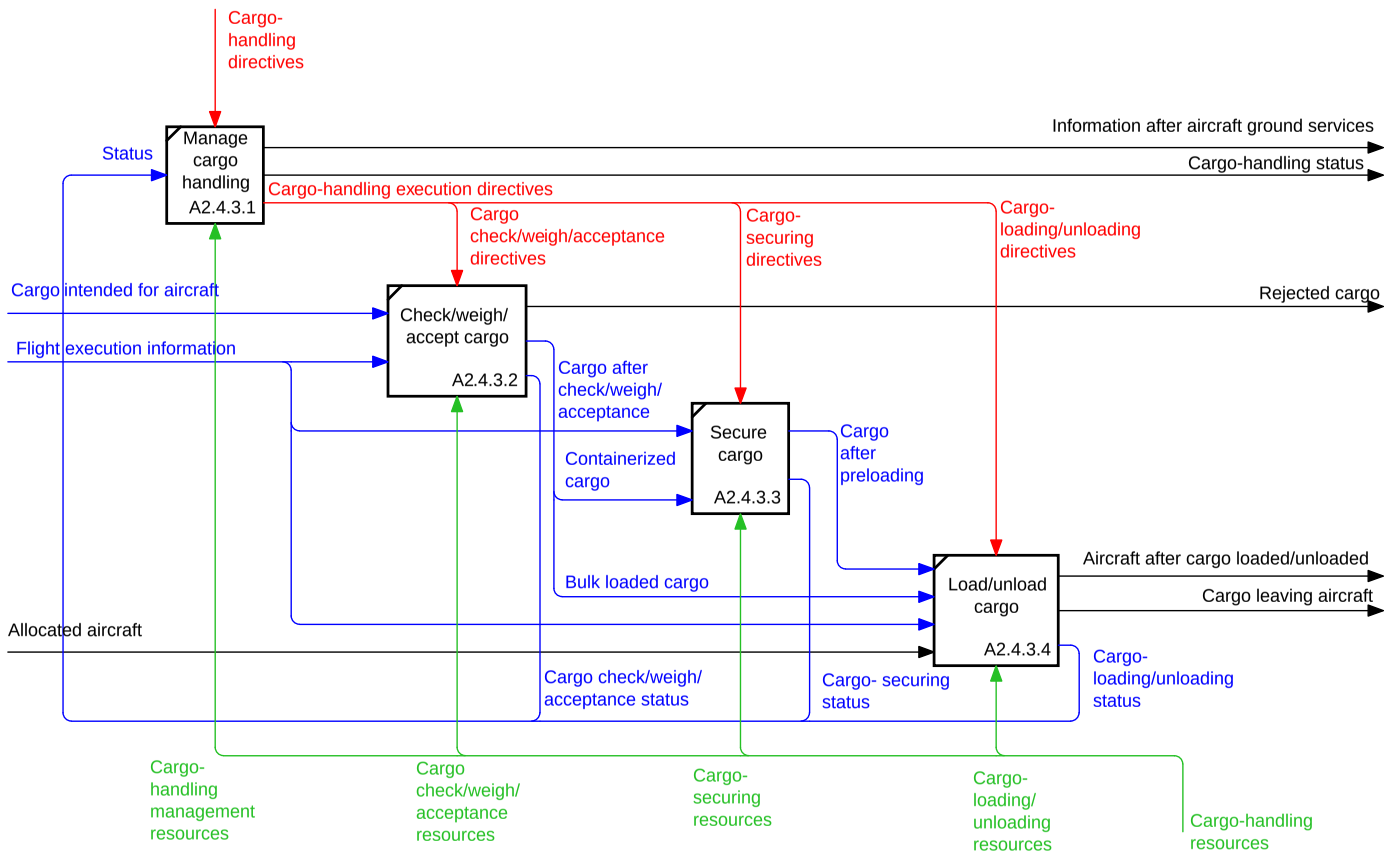

NODE:	TITLE:	NUMBER:
A2.4.3	Perform cargo handling	P.17

5.17 A2.4.3—PERFORM CARGO HANDLING.

5.17.1 A2.4.3.1—Manage Cargo Handling.

This function directs, schedules, and coordinates the following activities of cargo handling:

- Check/weigh/accept cargo
- Secure cargo
- Load/unload cargo

It provides directives, defines requirements and controls for the execution of those activities, including screening for dangerous goods and COMAT handling, and ensures that the execution is accomplished in accordance with company policies and procedures and any required regulations for these activities.

5.17.2 A2.4.3.2—Check/Weigh/Accept Cargo.

This function examines, screens, and accepts cargo for dangerous goods, COMAT, weight, and packaging.

5.17.3 A2.4.3.3—Secure Cargo.

This function preloads and secures cargo including pallets/nets/unit load devices (ULD), if applicable, such as separation restrictions and quantity restrictions.

5.17.4 A2.4.3.4—Load/Unload Cargo.

This function places cargo in the aircraft cargo areas before aircraft doors are secured for flight or removes cargo from the aircraft after the aircraft lands at the destination airport. Cargo that meets the safety requirement is ready for flight once secured with floor locks, nets, or other devices.

USED AT:	AUTHOR: Part 135 Modeling Team	DATE: 10/1/2008	WORKING	READER	DATE	CONTEXT:
	PROJECT: Part 135 Certificate Holder Functional Model	REV: 1/16/2009	DRAFT			
			RECOMMENDED			
	NOTES: 1 2 3 4 5 6 7 8 9 10		PUBLICATION			A2

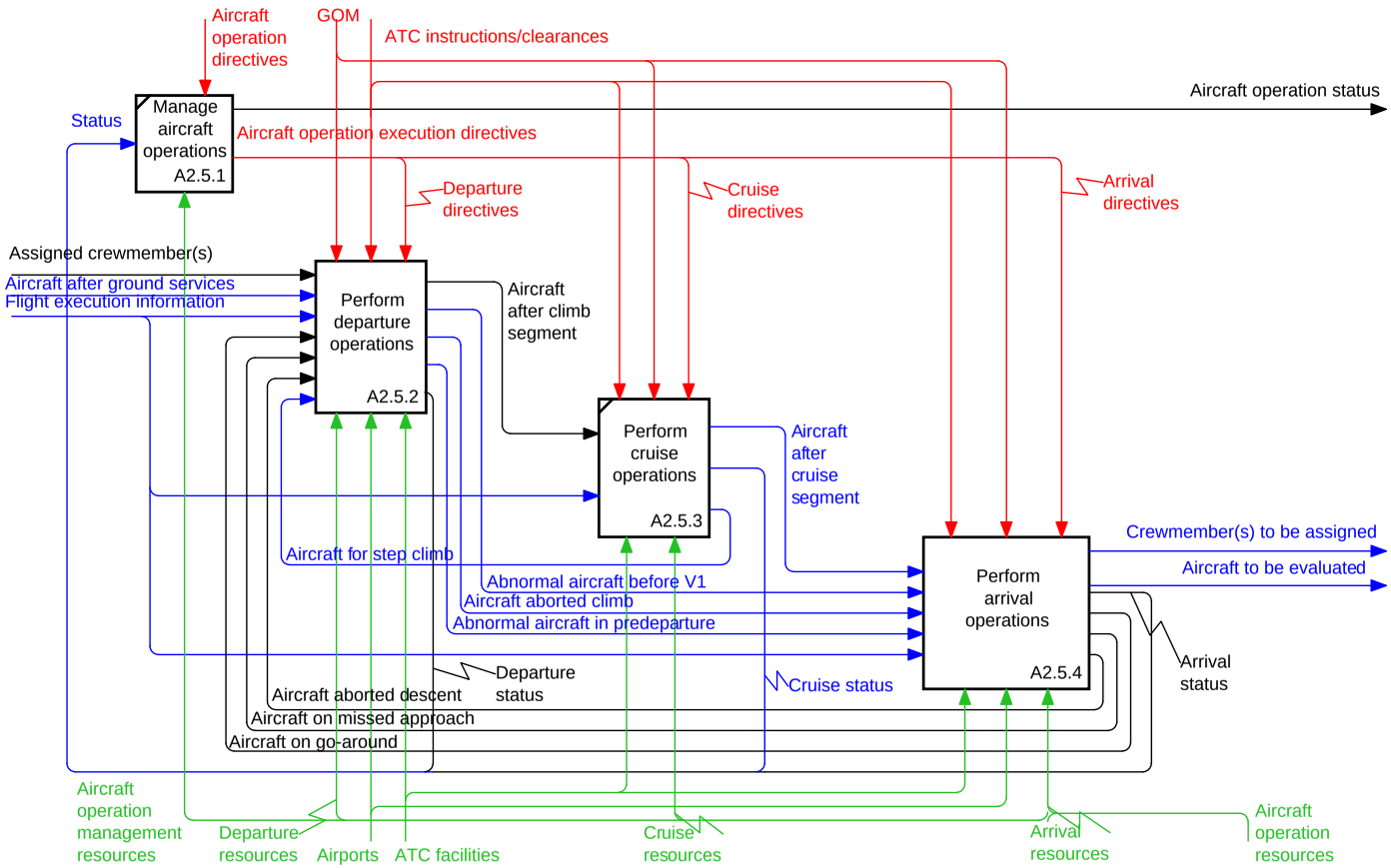

NODE:	TITLE:	NUMBER:
A2.5	Perform aircraft operations	P. 18

5.18 A2.5—PERFORM AIRCRAFT OPERATIONS.

5.18.1 A2.5.1—Manage Aircraft Operations.

This function directs, schedules, and coordinates the following activities of aircraft operations:

- Perform departure operations
- Perform cruise operations
- Perform arrival operations

It provides directives, defines requirements and controls for the execution of those activities, and ensures that the execution is accomplished in accordance with company policies and procedures and any required regulations for these activities.

5.18.2 A2.5.2—Perform Departure Operations.

This function captures the process of aircraft departure operations including predeparture ground operations, takeoff operations, and climb operations.

5.18.3 A2.5.3—Perform Cruise Operations.

This function captures the pilots' operations for keeping the aircraft at certain cruise altitudes and ends when the aircraft descent is initiated below cruise altitude. Pilots need to perform the following tasks during this process:

- Comply with company, FAA, and other applicable guidance and regulations and performance limitations regarding cruise operations

- Complete cruise checklist

This also includes pilot-initiated response to unexpected conditions such as medical, security, mechanical, and weather-related emergencies and diversions.

5.18.4 A2.5.4—Perform Arrival Operations.

This function captures the process of aircraft arrival operations including descent, approach, landing, and postarrival ground operations.

USED AT:	AUTHOR: Part 135 Modeling Team	DATE: 10/1/2008	WORKING	READER	DATE	CONTEXT:
	PROJECT: Part 135 Certificate Holder Functional Model	REV: 1/16/2009	DRAFT			
			RECOMMENDED			
	NOTES: 1 2 3 4 5 6 7 8 9 10		PUBLICATION			A2.5

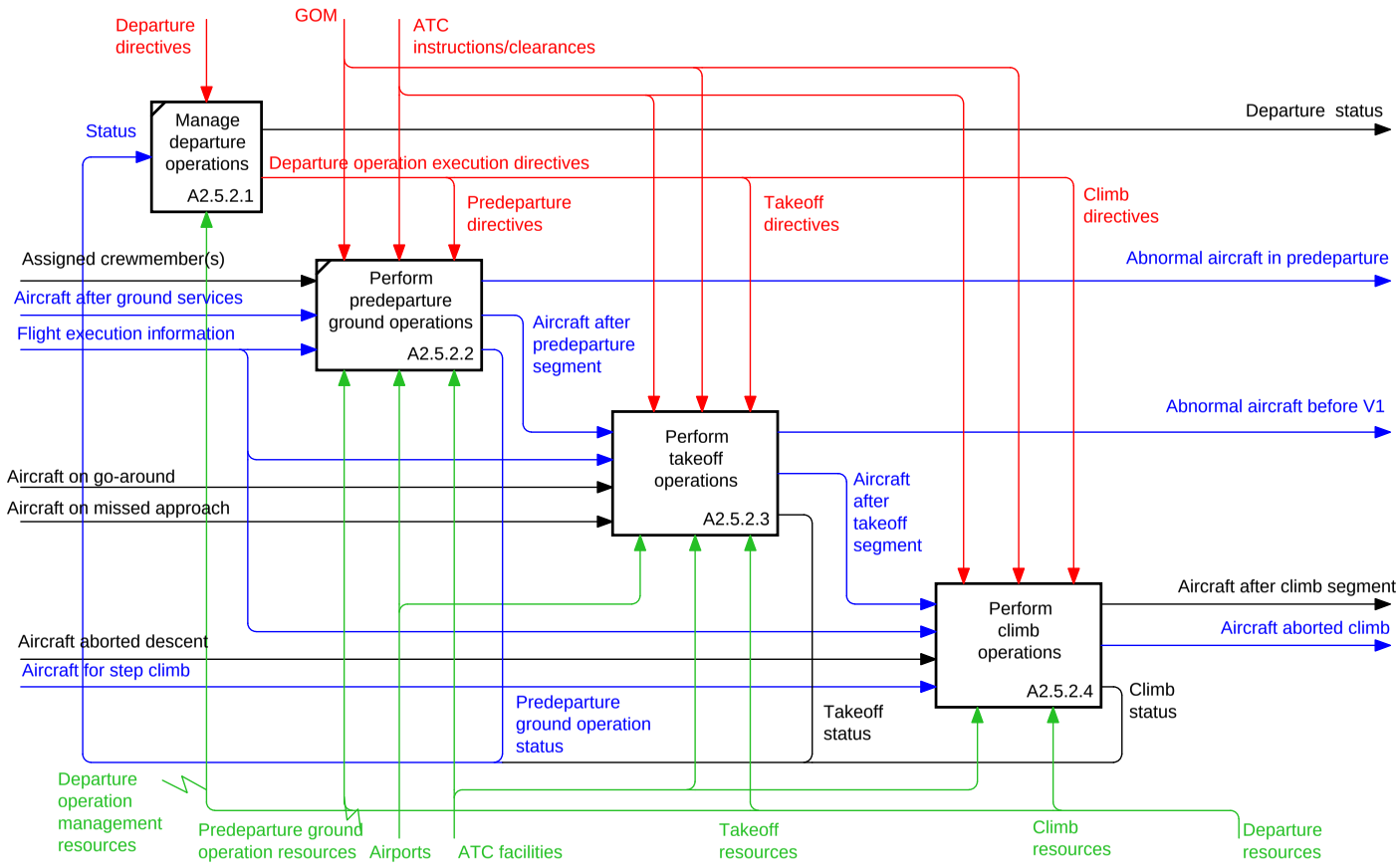

NODE:	TITLE:	NUMBER:
A2.5.2	Perform departure operations	P. 19

5.19 A2.5.2—PERFORM DEPARTURE OPERATIONS.

5.19.1 A2.5.2.1—Manage Departure Operations.

This function directs, schedules, and coordinates the following activities of aircraft departure operations:

- Perform predeparture ground operations
- Perform takeoff operations
- Perform climb operations

It provides directives, defines requirements and controls for the execution of those activities, and ensures that the execution is accomplished in accordance with company policies and procedures and any required regulations for these activities.

5.19.2 A2.5.2.2—Perform Predeparture Ground Operations.

This function captures the pilots' operations for the movement of the aircraft from push-back to engine start, to taxi-up to the hold-short line, and before the takeoff checklist. The push-back and engine start activity depend on whether the aircraft starts at the gate for power-back operations or uses remote parking. Ground equipment necessary for this activity may include a tug, powered air carts, ground power units, and ancillary connections at the gate. Once the engines are started, the aircraft moves under its own power and proceeds onto the taxiways. The pilots need to perform the following tasks during this process:

- Preflight preparation
- Interior/exterior preflight/flight deck preparation before the start procedures
- Coordinate aircraft movement with cabin crew
- Perform power-back/push-back/engine start procedures
- Perform pretaxi checks, taxi, and before takeoff procedures

Any unexpected situation would preclude the aircraft from continuing, thus a return to the gate is warranted, the aircraft may go directly to the postarrival ground operation stage. This function also deals with unexpected situations.

Security verification of assigned crew to assigned flight is included in this function.

Preparation for and marshalling of the aircraft out of the gate area is included in this function.

Note: This also includes security checks of the cockpit and security briefings as well as ATC clearances.

5.19.3 A2.5.2.3—Perform Takeoff Operations.

This function captures the pilots' operations from the moment the aircraft is authorized to taxi into position, moving on the active runway for takeoff, and through the takeoff phase of flight. Pilots need to comply with company, FAA, and other applicable takeoff guidance and regulations regarding takeoff operations.

5.19.4 A2.5.2.4—Perform Climb Operations.

This function captures the pilots' operations for the climb phase of the flight from setting the climb power until it reaches the cruise altitude. The pilots need to perform the following tasks during this process:

- Comply with company, FAA, and other applicable guidance and regulations and performance requirements regarding climb operations
- Perform climb to cruise altitude

USED AT:	AUTHOR: Part 135 Modeling Team	DATE: 10/1/2008	WORKING	READER	DATE	CONTEXT:
	PROJECT: Part 135 Certificate Holder Functional Model	REV: 1/16/2009	DRAFT			
			RECOMMENDED			
	NOTES: 1 2 3 4 5 6 7 8 9 10		PUBLICATION			A2.5.2

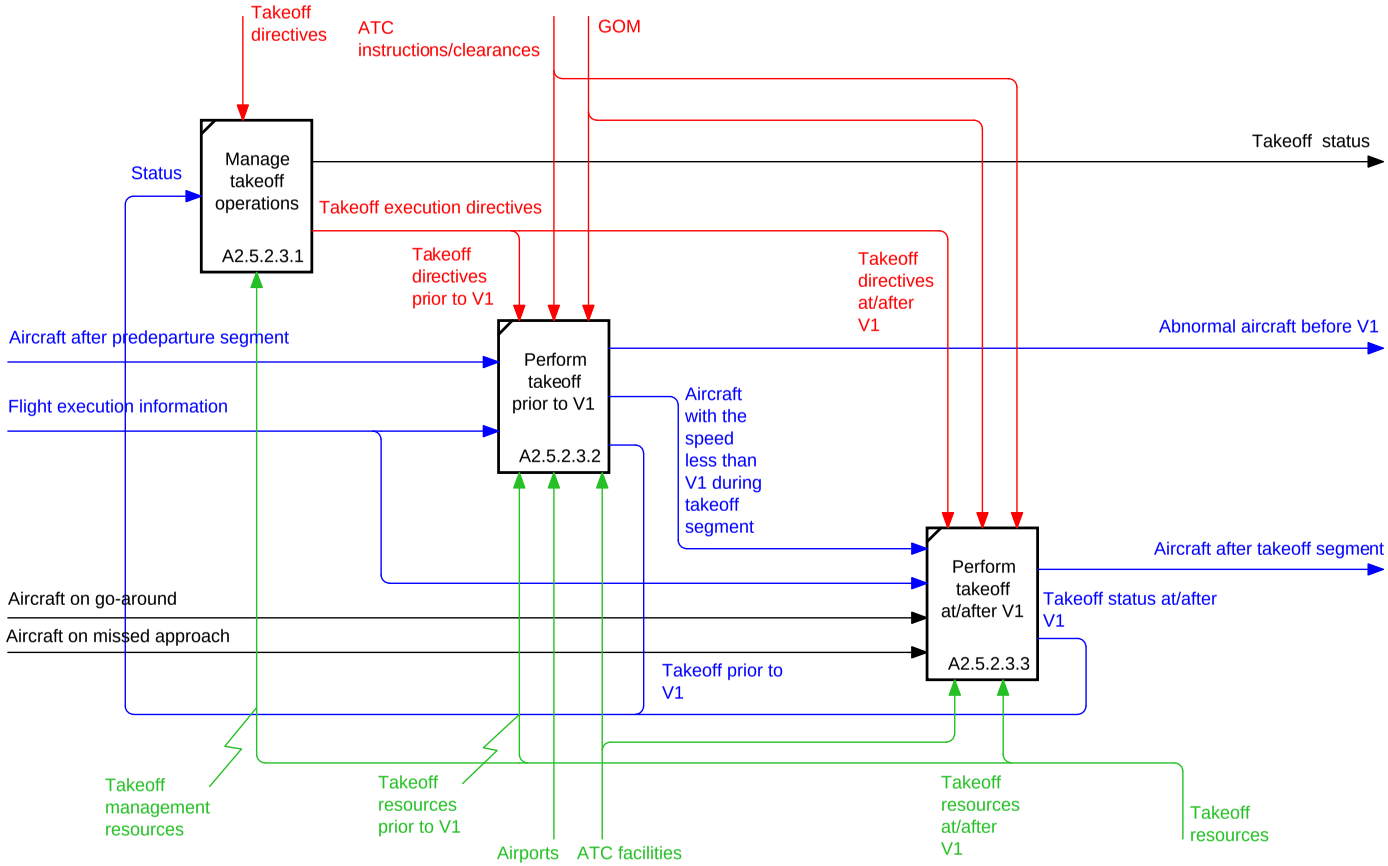

NODE:	TITLE:	NUMBER:
A2.5.2.3	Perform takeoff operations	P.20

5.20 A2.5.2.3—PERFORM TAKEOFF OPERATIONS.

5.20.1 A2.5.2.3.1—Manage Takeoff Operations.

This function directs, schedules, and coordinates the following activities of takeoff operations:

- Perform takeoff operation prior to takeoff decision speed (V1), if applicable
- Perform takeoff at/after V1, if applicable

It provides directives, defines requirements and controls for the execution of those activities, and ensures that the execution is accomplished in accordance with company policies and procedures and any required regulations for these activities.

5.20.2 A2.5.2.3.2—Perform Takeoff Prior to V1.

This function captures the pilots' operations to move the aircraft into position and perform normal takeoff procedures until the aircraft reaches V1, if applicable. Considerations need to be taken with regard to:

- Crew coordination
- Aircraft performance

5.20.3 A2.5.2.3.3—Perform Takeoff at/After V1.

This function captures the pilots' operations after V1, if applicable, and continues until the aircraft enters the climb phase of flight.

USED AT:	AUTHOR: Part 135 Modeling Team	DATE: 10/1/2008	WORKING	READER	DATE	CONTEXT:
	PROJECT: Part 135 Certificate Holder Functional Model	REV: 1/16/2009	DRAFT			
			RECOMMENDED			
	NOTES: 1 2 3 4 5 6 7 8 9 10		PUBLICATION			A2.5.2

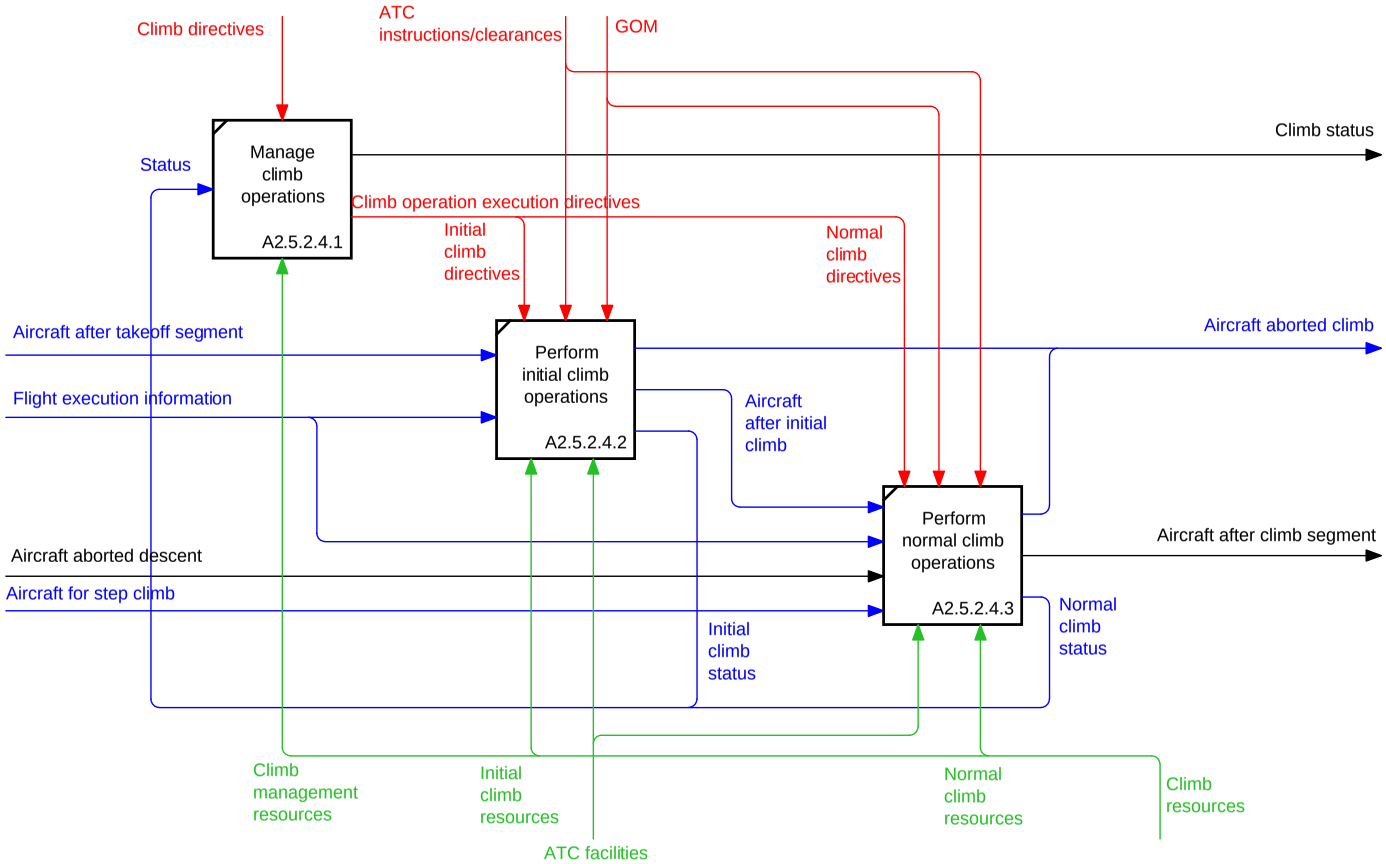

NODE:	TITLE:	NUMBER:
A2.5.2.4	Perform climb operations	P.21

5.21 A2.5.2.4—PERFORM CLIMB OPERATIONS.

5.21.1 A2.5.2.4.1—Manage Climb Operations.

This function directs, schedules, and coordinates the following activities of climb operations:

- Perform initial climb operations
- Perform normal climb operations

It provides directives, defines requirements and controls for the execution of those activities, and ensures that the execution is accomplished in accordance with company policies and procedures and any required regulations for these activities.

5.21.2 A2.5.2.4.2—Perform Initial Climb Operations.

This function captures the pilots' operations of an aircraft from the time climb power is set or flaps are retracted to the acceleration altitude. This segment coincides with the second segment in aircraft performance, if applicable.

5.21.3 A2.5.2.4.3—Perform Normal Climb Operations.

This function captures the pilots' operations during the climb phase. During this process, pilots may need to perform following tasks:

- Adjust climb power as appropriate
- Ensure aircraft accelerates to appropriate climb speed and to cruise altitude

This function also deals with unexpected situations that occur after V1, if applicable, and prior to cruise phase, such as:

- Engine failure
- Cabin door light
- Pressurization failure
- Medical emergency
- Onboard fire

Note: The flight may continue after the abnormal conditions have been resolved, e.g., abnormal pressurization condition may restrict cruise altitude.

USED AT:	AUTHOR: Part 135 Modeling Team	DATE: 10/1/2008	WORKING	READER	DATE	CONTEXT:
	PROJECT: Part 135 Certificate Holder Functional Model	REV: 1/16/2009	DRAFT			
			RECOMMENDED			
	NOTES: 1 2 3 4 5 6 7 8 9 10		PUBLICATION			A2.5

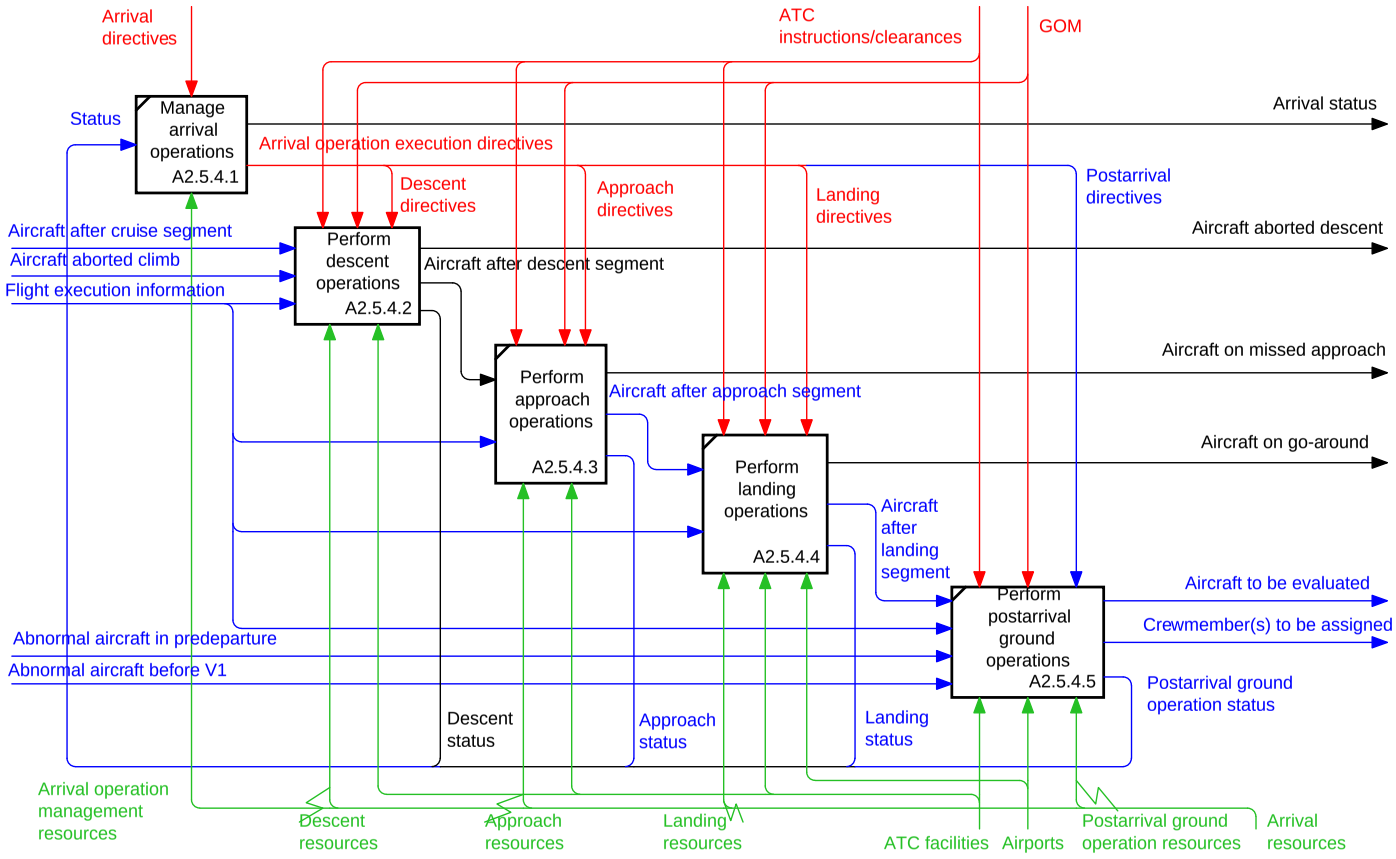

NODE:	TITLE:	NUMBER:
A2.5.4	Perform arrival operations	P. 22

5.22 A2.5.4—PERFORM ARRIVAL OPERATIONS.

5.22.1 A 2.5.4.1—Manage Arrival Operations.

This function directs, schedules, and coordinates the following activities of aircraft arrival operations:

- Perform descent operations
- Perform approach operations
- Perform landing operations
- Perform postarrival ground operations

It provides directives, defines requirements and controls for the execution of those activities, and ensures that the execution is accomplished in accordance with company policies and procedures and any required regulations for these activities.

5.22.2 A2.5.4.2—Perform Descent Operations.

This function captures the pilots' operations for the descent movement of the aircraft from its cruise altitudes until the aircraft begins its initial approach. Pilots may need to perform the following tasks during this process:

- Comply with company, FAA, and other applicable guidance and regulations regarding descent/holding operations
- Perform descent check and approach briefing, including coordinating with cabin crew, if applicable
- Perform initial descent from cruise altitude to the Initial Approach Fix (IAF)
- Perform approach holding procedures if required

5.22.3 A2.5.4.3—Perform Approach Operations.

This function captures the pilots' operations for aircraft descent from the IAF or the initiation of radar vectors to the Final Approach Fix (FAF) to the Missed Approach Point (MAP). Pilots should perform the following tasks during this process:

- Comply with company, FAA, and other applicable guidance and regulations regarding approach operations
- Perform a precision, nonprecision, or a visual approach

5.22.4 A2.5.4.4—Perform Landing Operations.

This function captures the pilots' operations from MAP, Decision Height, or Visual Descent Point to aircraft touchdown and movement on the runway and until it leaves the active runway. Pilots may need to conduct the following tasks during this process:

- Comply with company, FAA, and other applicable guidance and regulations regarding landing operations
- Perform normal landing

5.22.5 A2.5.4.5—Perform Postarrival Ground Operations.

This function captures the pilots' operations to make the aircraft move onto the taxiway after clearing the runway to assigned parking. Pilots may need to conduct the following tasks during this process:

- Comply with company, FAA, and other applicable guidance and regulations regarding postarrival ground operations
- Coordinate aircraft arrival with cabin crew, if applicable
- Perform taxi operations
- Perform shutdown and associated checklists
- Coordinate aircraft arrival with cabin crew, if applicable

This also includes preparation for and marshalling of the aircraft into the gate or disembarking area.

USED AT:	AUTHOR: Part 135 Modeling Team	DATE: 10/1/2008	WORKING	READER	DATE	CONTEXT:
	PROJECT: Part 135 Certificate Holder Functional Model	REV: 1/16/2009	DRAFT			
			RECOMMENDED			
	NOTES: 1 2 3 4 5 6 7 8 9 10		PUBLICATION			A2.5.4

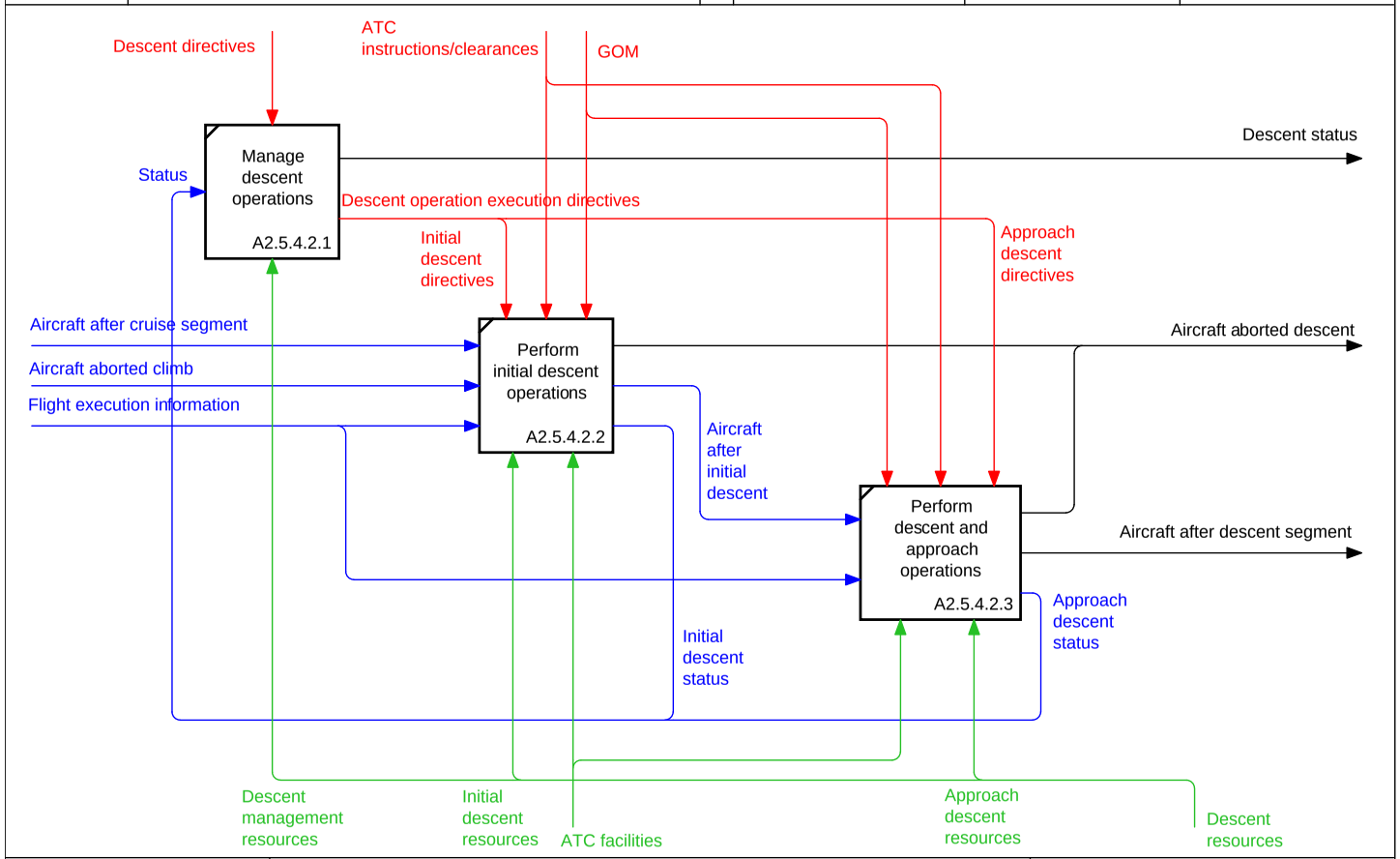

NODE:	TITLE:	NUMBER:
A2.5.4.2	Perform descent operations	P.23

5.23 A2.5.4.2—PERFORM DESCENT OPERATIONS.

5.23.1 A 2.5.4.2.1—Manage Descent Operations.

This function directs, schedules, and coordinates the following activities of descent operations:

- Perform initial descent operations
- Perform descent and approach operations

It provides directives, defines requirements and controls for the execution of those activities, and ensures that the execution is accomplished in accordance with company policies and procedures and any required regulations for these activities.

5.23.2 A2.5.4.2.2—Perform Initial Descent Operations.

This function captures the pilots' operations to initiate the aircraft descent from cruise altitude to initial approach altitude. During this process, pilots may need to perform airspeed and altitude control.

This function also deals with unexpected situations.

5.23.3 A2.5.4.2.3—Perform Descent and Approach Operations.

This function captures the pilots' operations to descend the aircraft from the IAF altitude to the FAF or final approach on a visual approach. During this process, the pilots may need to perform airspeed and altitude control.

USED AT:	AUTHOR: Part 135 Modeling Team	DATE: 10/1/2008	WORKING	READER	DATE	CONTEXT:
	PROJECT: Part 135 Certificate Holder Functional Model	REV: 1/16/2008	DRAFT			
			RECOMMENDED			
	NOTES: 1 2 3 4 5 6 7 8 9 10		PUBLICATION			A0

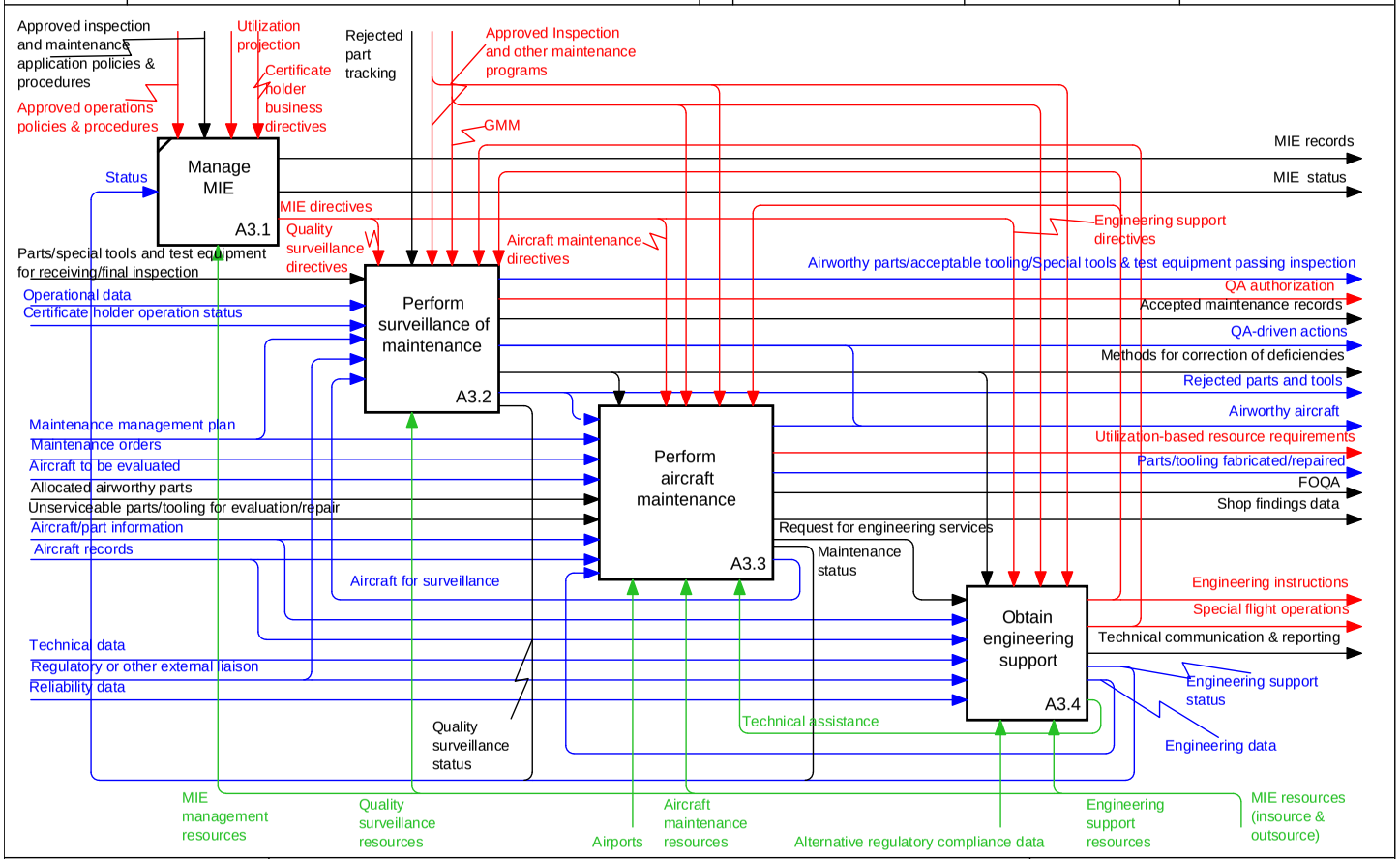

NODE:	TITLE:	NUMBER:
A3	Perform maintenance, inspection & engineering	P.24

5.24 A3—PERFORM MAINTENANCE, INSPECTION & ENGINEERING.

5.24.1 A3.1—Manage MIE.

This function directs, schedules, and coordinates the following activities of aircraft MIE:

- Perform quality surveillance of maintenance
- Perform aircraft maintenance
- Obtain engineering support

It provides directives, defines requirements and controls for the execution of those activities, and ensures that the execution is accomplished in accordance with company policies and procedures and any required regulations for these activities.

5.24.2 A3.2—Perform Surveillance of Maintenance.

This function determines the quality of maintenance accomplished on the aircraft, engine, components, etc., by a 14 CFR Part 135 certificate holder.

5.24.3 A3.3—Perform Aircraft Maintenance.

This function inspects and maintains aircraft to prevent deterioration of the inherent safety and reliability levels of the equipment to ensure the aircraft conforms to its type design and is in a condition for safe operations. This function includes inspection and maintenance of engines, propellers, accessories, and other major aircraft systems. This includes aircraft scheduled/nonscheduled maintenance.

5.24.4 A3.4—Obtain Engineering Support.

This function provides engineering assistance and advice for aircraft maintenance to ensure the data and operating procedures used for aircraft maintenance meet the engineering requirements. This function develops standards for the performance of maintenance.

Note: Some 14 CFR Part 135 certificate holders do not have an engineering department; here, only the engineering function is captured. For example, maintenance may require engineering support to develop major repair data.

USED AT:	AUTHOR: Part 135 Modeling Team	DATE: 10/1/2008	WORKING	READER	DATE	CONTEXT:
	PROJECT: Part 135 Certificate Holder Functional Model	REV: 1/16/2009	DRAFT			
			RECOMMENDED			
	NOTES: 1 2 3 4 5 6 7 8 9 10		PUBLICATION			A3

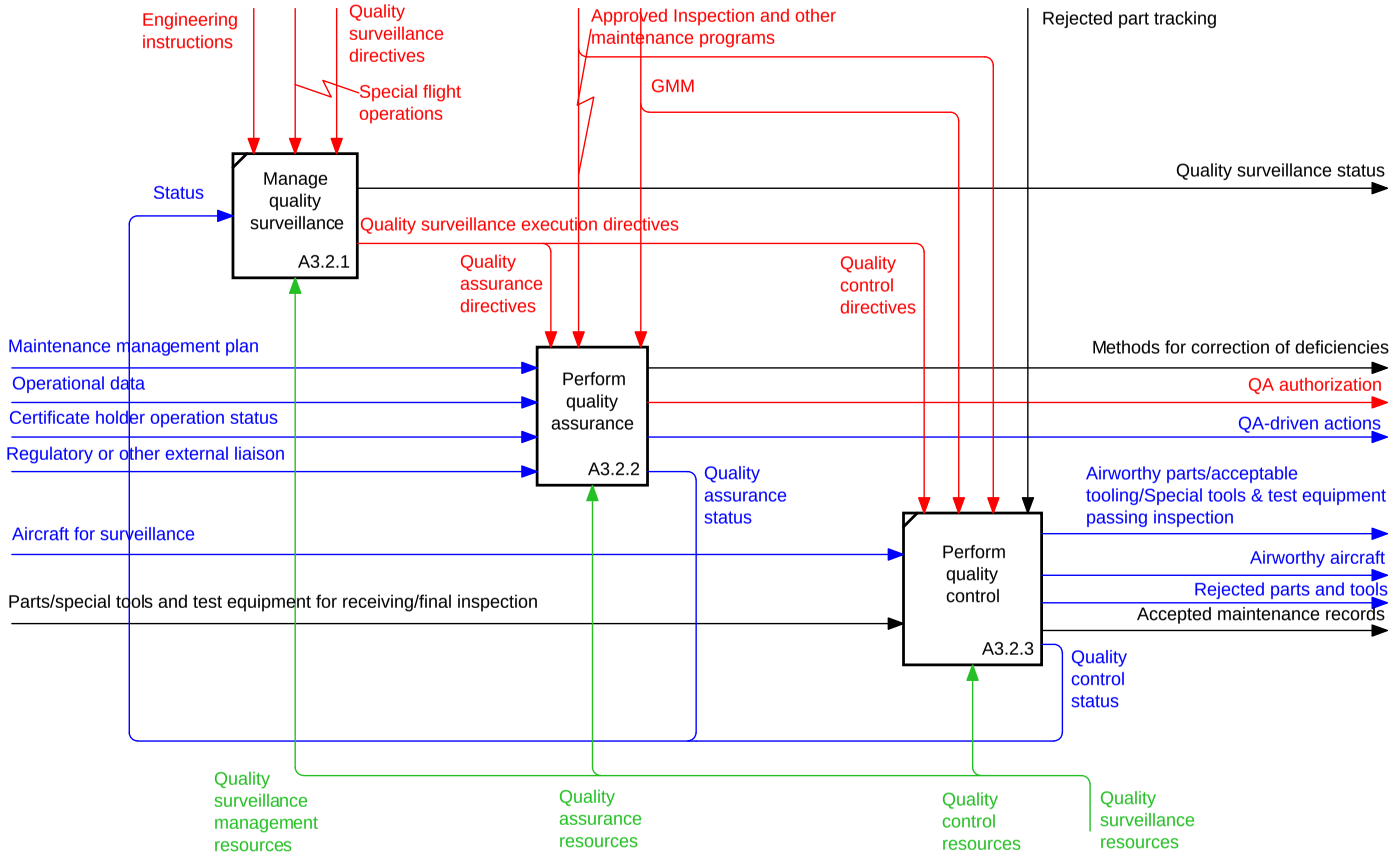

NODE:	TITLE:	NUMBER:
A3.2	Perform surveillance of maintenance	P.25

5.25 A3.2—PERFORM SURVEILLANCE OF MAINTENANCE.

5.25.1 A3.2.1—Manage Quality Surveillance.

This function directs, schedules, and coordinates the following activities of quality surveillance:

- Perform quality assurance
- Perform quality control

It provides directives, defines requirements and controls for the execution of those activities, and ensures that the execution is accomplished in accordance with company policies and procedures and any required regulations for these activities.

5.25.2 A3.2.2—Perform Quality Assurance.

This function performs continuous analysis and surveillance, if required, on the total maintenance and inspection programs for performance and effectiveness; it also provides and implements timely corrective action of deficiencies in the maintenance and inspection programs.

5.25.3 A3.2.3—Perform Quality Control.

This function performs the inspection of maintenance, including incoming parts and materials to ensure the maintenance work is done in compliance with 14 CFR Part 135 certificate holder's maintenance program, manufacturers' manuals and instructions. This includes:

- Conformity inspection
- Receiving inspection
    - Traceability documentation
    - Suspected unapproved parts (SUP) control
    - Part serviceability
    - Vendor sources
    - Quarantine of parts awaiting proper documentation

- Quarantine of unserviceable parts
- Return to service documentation, i.e., FAA Form 337 or 8130
- Special handling and storage requirements
    - Shelf life
    - Electrostatic Discharge Sensitive
    - Dangerous goods
    - Environmental controls

USED AT:	AUTHOR: Part 135 Modeling Team	DATE: 10/1/2008	WORKING	READER	DATE	CONTEXT:
	PROJECT: Part 135 Certificate Holder Functional Model	REV: 1/16/2009	DRAFT			
			RECOMMENDED			
	NOTES: 1 2 3 4 5 6 7 8 9 10		PUBLICATION			A3.2

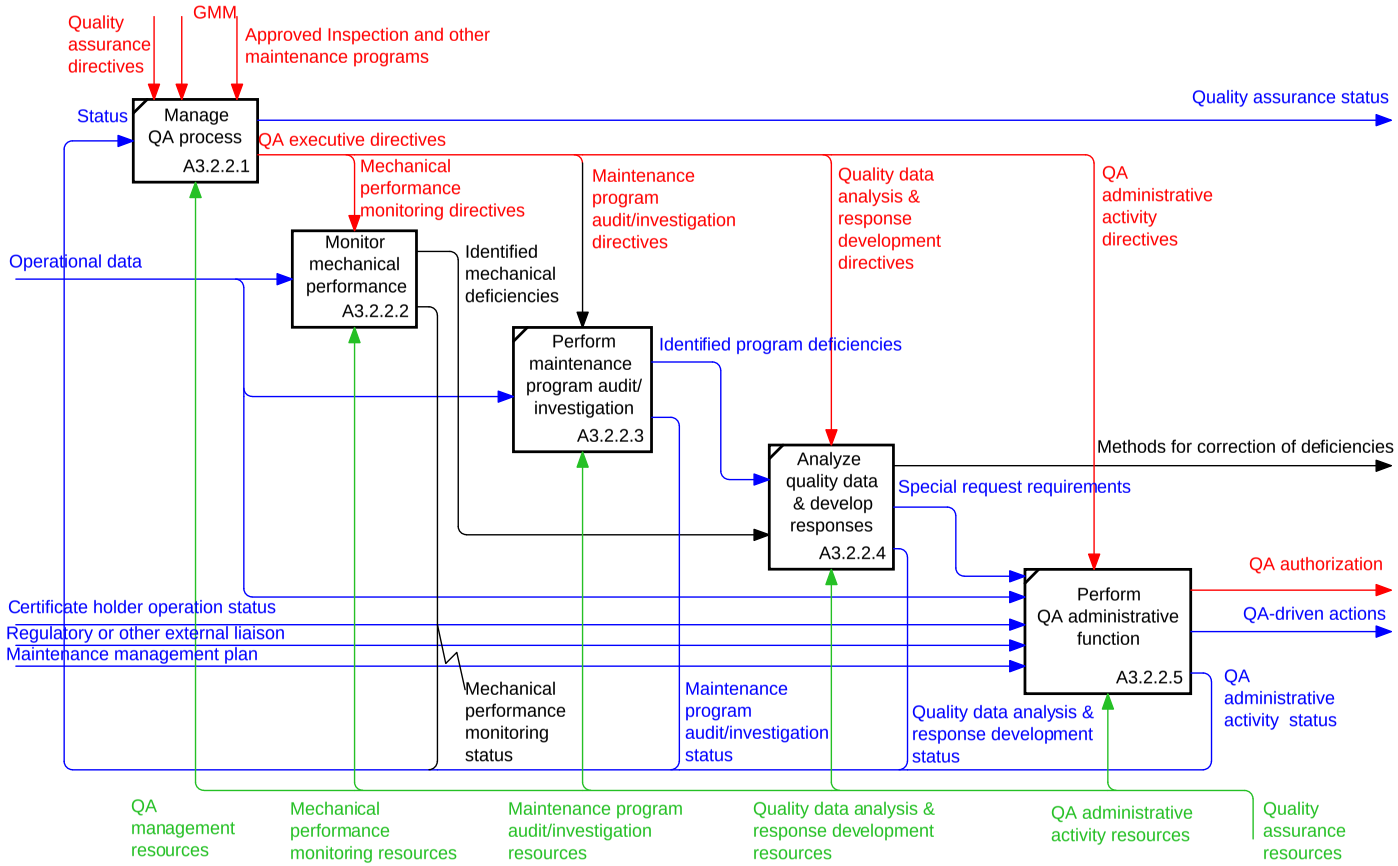

NODE:	TITLE:	NUMBER:
A3.2.2	Perform quality assurance	P.26

5.26 A3.2.2—PERFORM QUALITY ASSURANCE.

5.26.1 A3.2.2.1—Manage QA Process.

This function directs, schedules, and coordinates the following activities of aircraft quality assurance (QA):

- Monitor mechanical performance
- Perform maintenance program audit/investigation
- Analyze quality data & develop responses
- Perform QA administrative function

It provides directives, defines requirements and controls for the execution of those activities, and ensures that the execution is accomplished in accordance with company policies and procedures and any required regulations for these activities.

5.26.2 A3.2.2.2—Monitor Mechanical Performance.

This function collects and analyzes operational data with the intent of identifying maintenance and inspection program deficiencies that require corrective action. This monitoring is done through mandated reporting, short-term (day-to-day) and long-term monitoring.

Mandated reporting includes identifying emergency/critical situations, determining causes, failures, malfunctions and formulating a plan to ensure that similar conditions do not exist in like equipment. Typical examples of mandated reporting include:

- In-flight engine separations
- In-flight propeller separations
- Uncontained engine failures
- Critical structural failures
- Any life-limited part failure

Short-term (day-to-day) monitoring refers to the frequent, periodic reviews of daily activities. Normally, large certificate holders conduct daily meetings to discuss morning launch delays and activities of the previous day. Smaller certificate holders conduct these meetings at less frequent intervals. Items typically discussed include:

- Daily mechanical problems of each aircraft

- Nonavailability of spare parts
- Inadequate manpower to perform maintenance
- Deferred maintenance items—excessive numbers and time
- Safety related failures (e.g., reversers)
- Lack of approved tools
- Recurring maintenance problems
- Excessive unscheduled maintenance
- Maintenance delays/cancellations
- Scheduled inspection results, including sufficient time to complete the check, unusual/critical findings, recurring problems, and parts/equipment/manpower availability

Long-term monitoring includes charting or some appropriate means of reporting and accounting operational data at specified intervals to reveal trend-related information. Typical examples of operational data used to monitor mechanical performance include:

- Pilot reports compiled by Air Transportation Association (ATA) code
- Inspection findings compiled by ATA code
- Failure rates compiled by ATA code
- Part removal rate
- No fault found from the manufacturer/repair station
- Tear-down reports
- Premature removal rates (including engines)
- Engine shut-down rates
- Confirmed failure rates
- Deferred MEL items
- MIS
- Mechanical Reliability Reports (MRR)

5.26.3 A3.2.2.3—Perform Maintenance Program Audit/Investigation.

This function conducts continuous audits and investigations as necessary, of the total maintenance program, to identify deficiencies. Typical audit functions ensure that:

- All publications and work forms are current and readily available to the user.
- Maintenance is performed according to the methods, standards, and techniques specified in the certificate holder's manuals.
- Maintenance forms are screened for completeness, proper entries, and required inspection items (RII) identification.
- Major repairs/alterations are properly classified and accomplished with approved data.
- Records of all applicable Airworthiness Directives contain current status and method of compliance.
- Airworthiness releases are executed by designated persons and according to procedures specified in the certificate holder's manuals.
- Records reveal current status of life-limited parts.
- The training program syllabus is being followed.
- Carryover items and deferred maintenance are properly handled.
- Vendors are properly authorized, qualified, staffed, and equipped to do the contractor function according to the certificate holder's manual including Coordinating Agency for Supplier Evaluation (CASE) functions, if used.

5.26.4 A3.2.2.4—Analyze Quality Data & Develop Responses.

This function coordinates with maintenance personnel to analyze and develop corrective actions from any deficiencies discovered during the surveillance and/or analysis. This process may generate a special audit according to the CASS program, if required.

This function includes analyses of Internal Evaluation Program (IEP) and CASS data.

5.26.5 A3.2.2.5—Perform QA Administrative Function.

This function conducts activities performed by the QA, such as special flight authorization, special test equipment, MEL extension, regulatory reporting, selecting or deselecting vendors and suppliers (including fuel and deicing suppliers), CASE administration activities, change Operational Specification's revision, vendor list, change audit schedules, replacement of lost aircraft certificate, SUP's reporting, MIS, etc.

This function also includes the inspection or surveillance of outsourced entities to assure that the work contracted to them is accomplished in compliance with the certificate holder's requirements and manuals.

USED AT:	AUTHOR: Part 135 Modeling Team	DATE: 10/1/2008	■ WORKING	READER	DATE	CONTEXT:
	PROJECT: Part 135 Certificate Holder Functional Model	REV: 1/16/2009	DRAFT			
			RECOMMENDED			
	NOTES: 1 2 3 4 5 6 7 8 9 10		PUBLICATION			A3.2.2

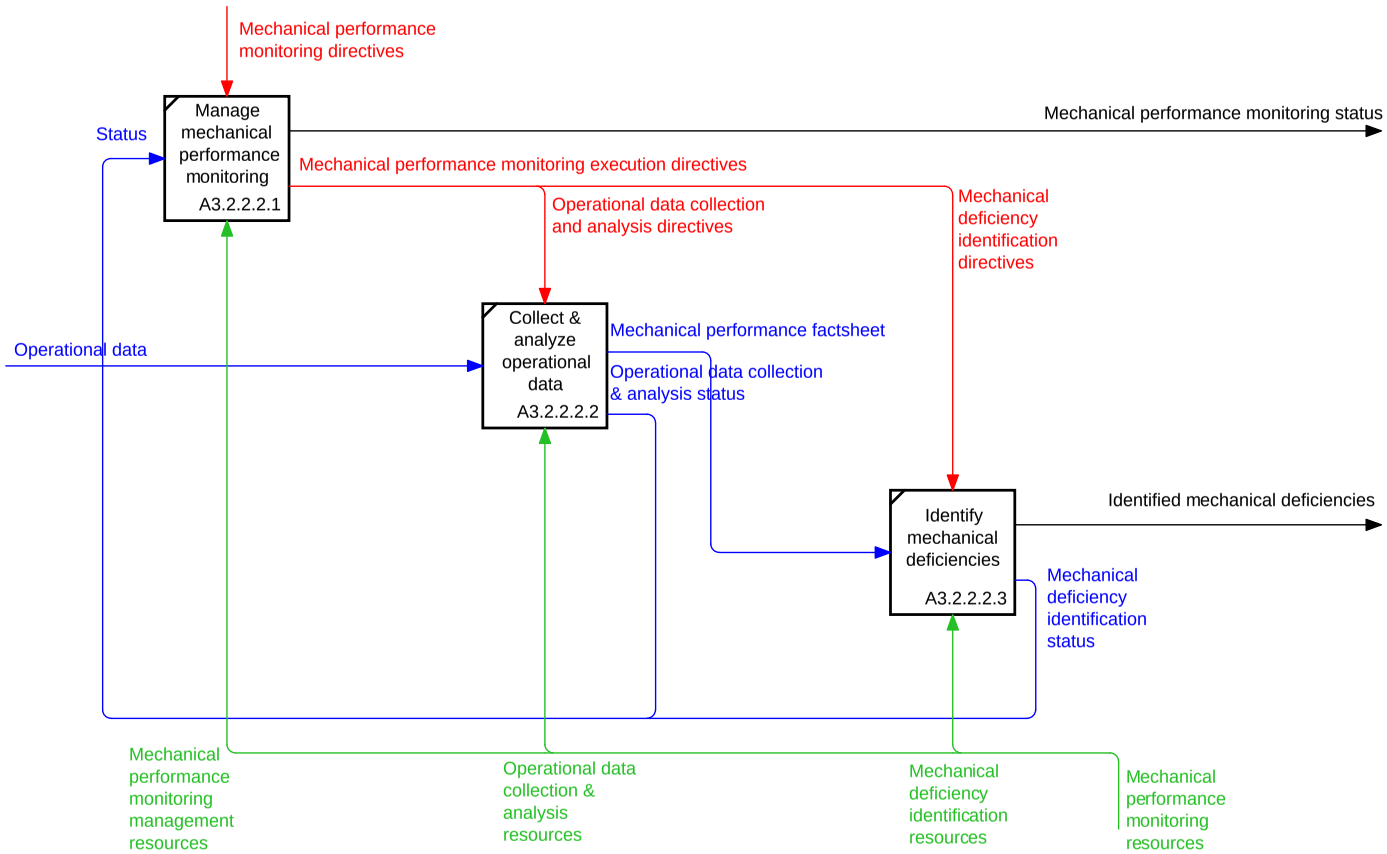

NODE:	TITLE:	NUMBER:
A3.2.2.2	Monitor mechanical performance	P.27

5.27 A3.2.2.2—MONITOR MECHANICAL PERFORMANCE.

5.27.1 A3.2.2.2.1—Manage Mechanical Performance Monitoring.

This function directs, schedules, and coordinates the following activities of aircraft mechanical performance monitoring:

- Collect & analyze operational data
- Identify mechanical deficiencies

It provides directives, defines requirements and controls for the execution of those activities, and ensures that the execution is accomplished in accordance with company policies and procedures and any required regulations for these activities.

5.27.2 A3.2.2.2.2—Collect & Analyze Operational Data.

This function collects and analyzes, through mandated reporting, short-term (day-to-day) and long-term monitoring operational data to reveal the existing mechanical performance or its trend.

5.27.3 A3.2.2.2.3—Identify Mechanical Deficiencies.

This function identifies mechanical deficiencies.

USED AT:	AUTHOR: Part 135 Modeling Team	DATE: 10/1/2008	WORKING	READER	DATE	CONTEXT:
	PROJECT: Part 135 Certificate Holder Functional Model	REV: 1/16/2009	DRAFT			
			RECOMMENDED			
	NOTES: 1 2 3 4 5 6 7 8 9 10		PUBLICATION			A3

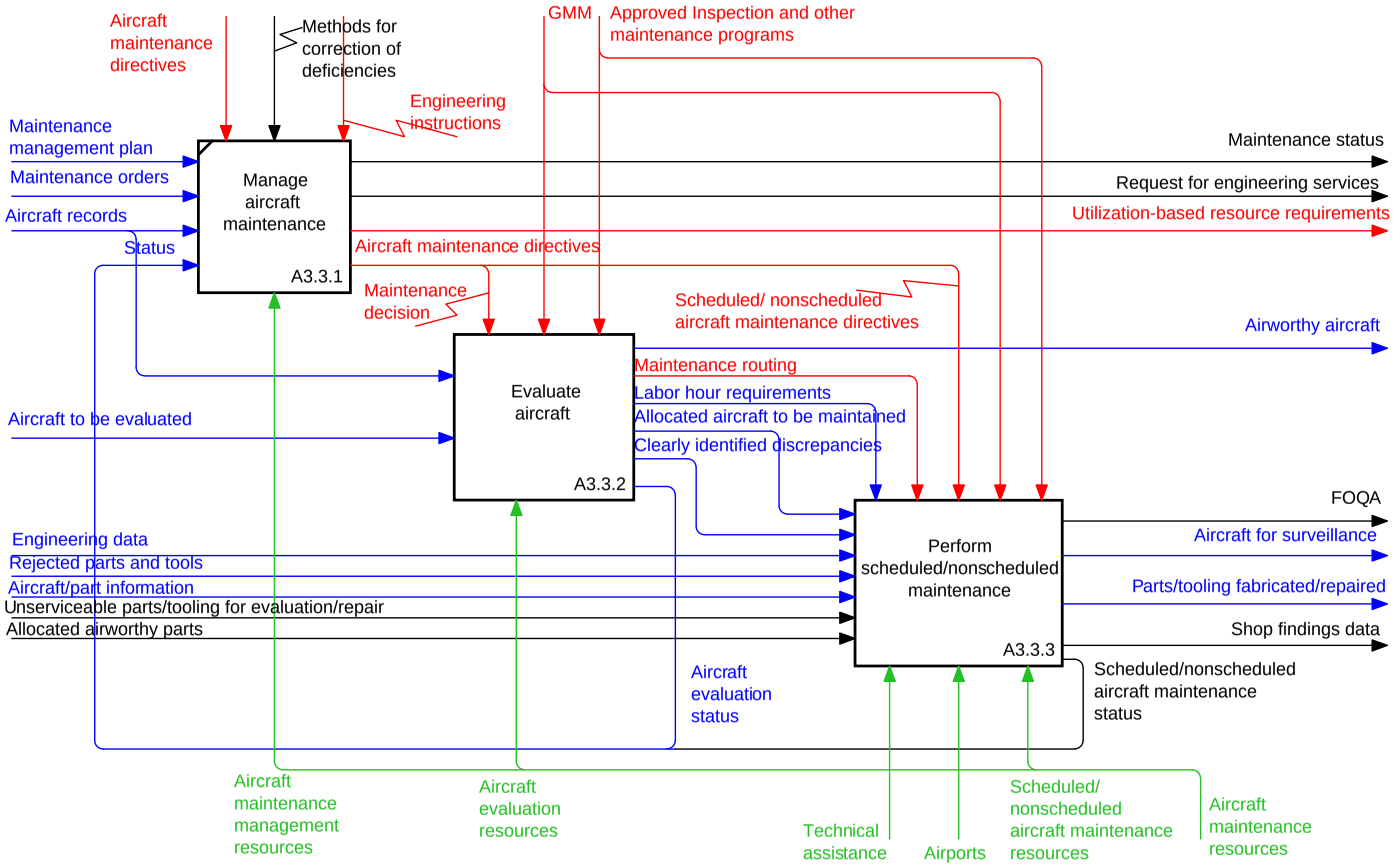

NODE:	TITLE:	NUMBER:
A3.3	Perform aircraft maintenance	P. 28

5.28 A3.3—PERFORM AIRCRAFT MAINTENANCE.

5.28.1 A3.3.1—Manage Aircraft Maintenance.

This function directs, schedules, and coordinates the following activities of the aircraft maintenance:

- Evaluate aircraft
- Perform scheduled/nonscheduled maintenance

It provides directives, defines requirements and controls for the execution of those activities, and ensures that the execution is accomplished in accordance with company policies and procedures and any required regulations for these activities.

5.28.2 A3.3.2—Evaluate Aircraft.

This function controls aircraft inspections, test, and evaluation, including a determination of whether the aircraft is in an airworthy condition, if deficiencies can be deferred, and where corrective action can be accomplished. This function also includes assessment of the availability of resources.

5.28.3 A3.3.3—Perform Scheduled/Nonscheduled Maintenance.

This function conducts aircraft maintenance based on the maintenance programs and information from aircraft evaluation, including deferrals. Here, scheduled (routine) maintenance is referred to as the performance of maintenance tasks at prescribed intervals, and nonscheduled (nonroutine) maintenance is referred to as the performance of maintenance tasks when mechanical irregularities occur.

USED AT:	AUTHOR: Part 135 Modeling Team	DATE: 10/1/2008	WORKING	READER	DATE	CONTEXT:
	PROJECT: Part 135 Certificate Holder Functional Model	REV: 1/16/2009	DRAFT			
			RECOMMENDED			
	NOTES: 1 2 3 4 5 6 7 8 9 10		PUBLICATION			A3.3

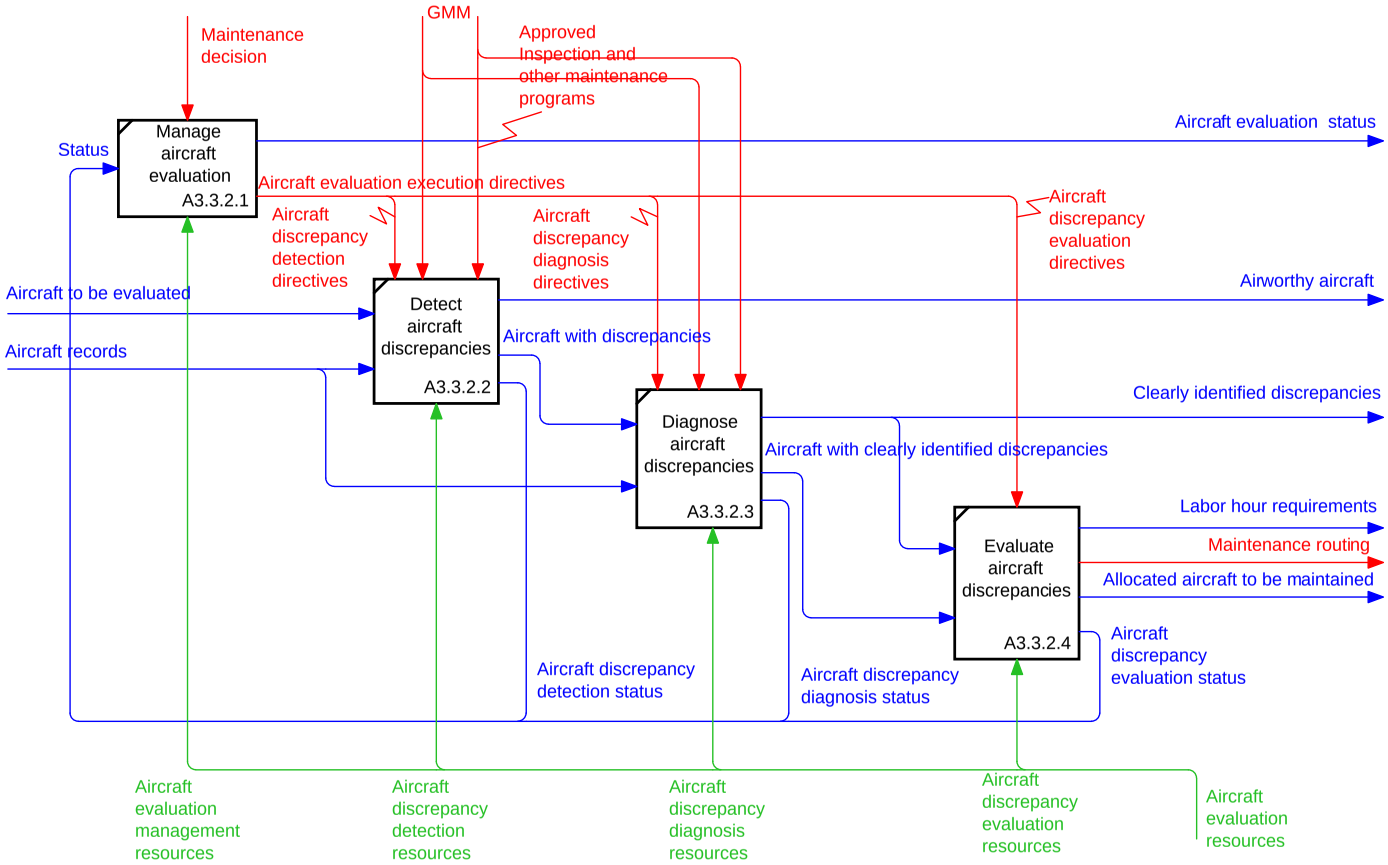

NODE:	TITLE:	NUMBER:
A3.3.2	Evaluate aircraft	P. 29

5.29 A3.3.2—EVALUATE AIRCRAFT.

5.29.1 A3.3.2.1—Manage Aircraft Evaluation.

This function directs, schedules, and coordinates the following activities of aircraft evaluation:

- Detect aircraft discrepancies
- Diagnose aircraft discrepancies
- Evaluate aircraft discrepancies

It provides directives, defines requirements and controls for the execution of those activities, and ensures that the execution is accomplished in accordance with company policies and procedures and any required regulations for these activities.

5.29.2 A3.3.2.2—Detect Aircraft Discrepancies.

This function identifies evidence that some discrepancies exist with the aircraft.

5.29.3 A3.3.2.3—Diagnose Aircraft Discrepancies.

This function includes troubleshooting the root cause(s) of aircraft discrepancies based on the information from aircraft discrepancies reports and records.

5.29.4 A3.3.2.4—Evaluate Aircraft Discrepancies.

This function assesses aircraft discrepancies and estimates the workload and parts required to fix the discrepancies; it also determines the routing plan for the aircraft maintenance, if applicable.

USED AT:	AUTHOR: Part 135 Modeling Team	DATE: 10/1/2008	WORKING	READER	DATE	CONTEXT:
	PROJECT: Part 135 Certificate Holder Functional Model	REV: 1/16/2009	DRAFT			
			RECOMMENDED			
	NOTES: 1 2 3 4 5 6 7 8 9 10		PUBLICATION			A3.3

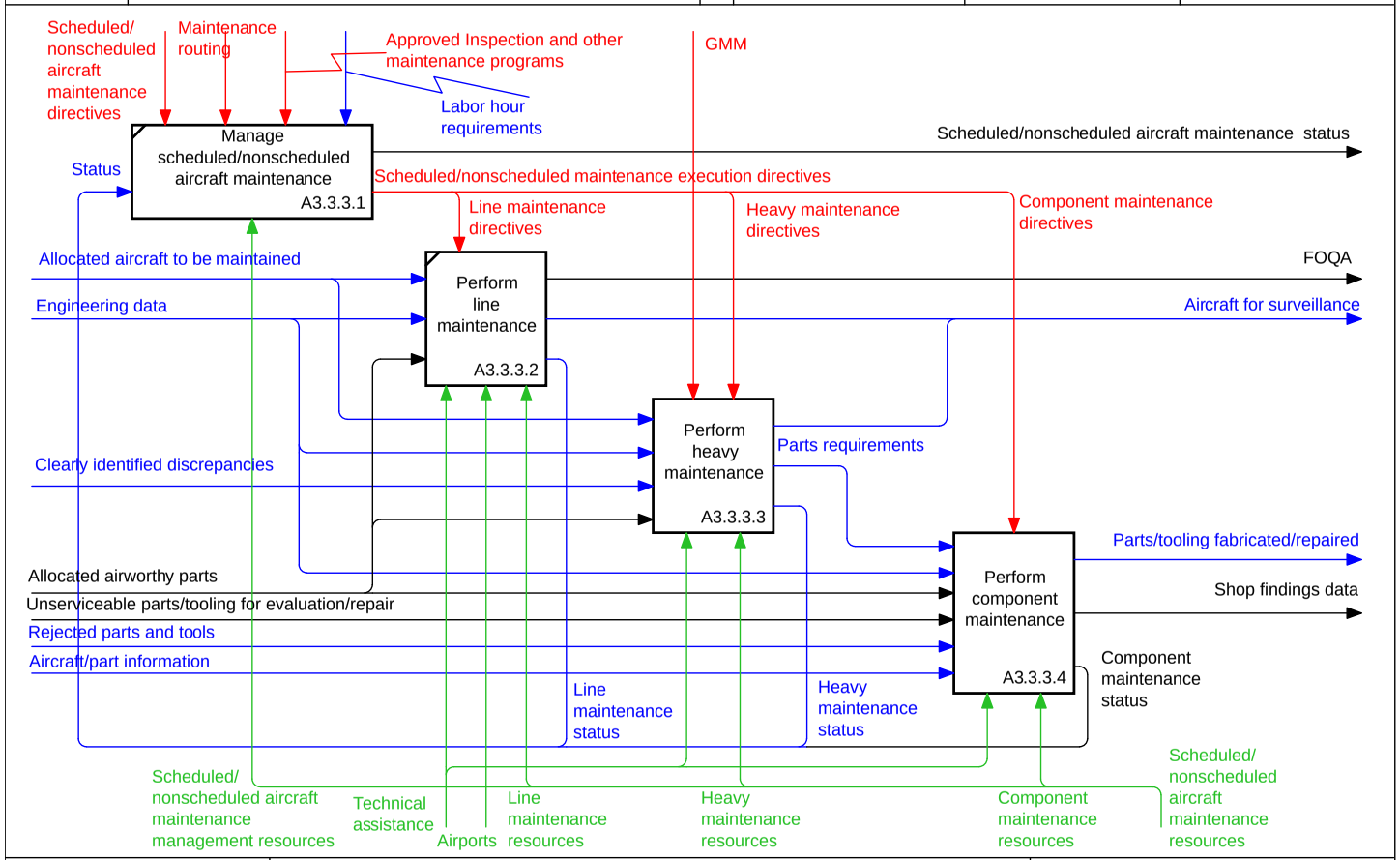

NODE:	TITLE:	NUMBER:
A3.3.3	Perform scheduled/nonscheduled maintenance	P. 30

5.30 A3.3.3—PERFORM SCHEDULED/NONSCHEDULED MAINTENANCE.

5.30.1 A3.3.3.1—Manage Scheduled/Nonscheduled Aircraft Maintenance.

This function directs, schedules, and coordinates the following activities of scheduled/nonscheduled aircraft maintenance:

- Perform line maintenance
- Perform heavy maintenance
- Perform component maintenance

It provides directives, defines requirements and controls for the execution of those activities, and ensures that the execution is done in accordance with company policies and procedures and any required regulations for these activities.

5.30.2 A3.3.3.2—Perform Line Maintenance.

This function provides aircraft maintenance, testing, inspection, and servicing.

This activity is usually conducted at the airport within a limited time period without necessarily sending the aircraft to a maintenance station.

5.30.3 A3.3.3.3—Perform Heavy Maintenance.

This function provides maintenance that is normally performed off-line, including heavy maintenance checks, repairs, alterations, and modifications based on the maintenance program and information from an aircraft condition evaluation.

This activity is usually conducted in maintenance stations in a controlled environment.

5.30.4 A3.3.3.4—Perform Component Maintenance.

This function maintains the aircraft component to ensure the serviceability of parts. A component can be an appliance, instrument, radio, or an accessory.

USED AT:	AUTHOR: Part 135 Modeling Team	DATE: 10/1/2008	WORKING	READER	DATE	CONTEXT:
	PROJECT: Part 135 Certificate Holder Functional Model	REV: 1/16/2009	DRAFT			
			RECOMMENDED			
	NOTES: 1 2 3 4 5 6 7 8 9 10		PUBLICATION			A3.3.3

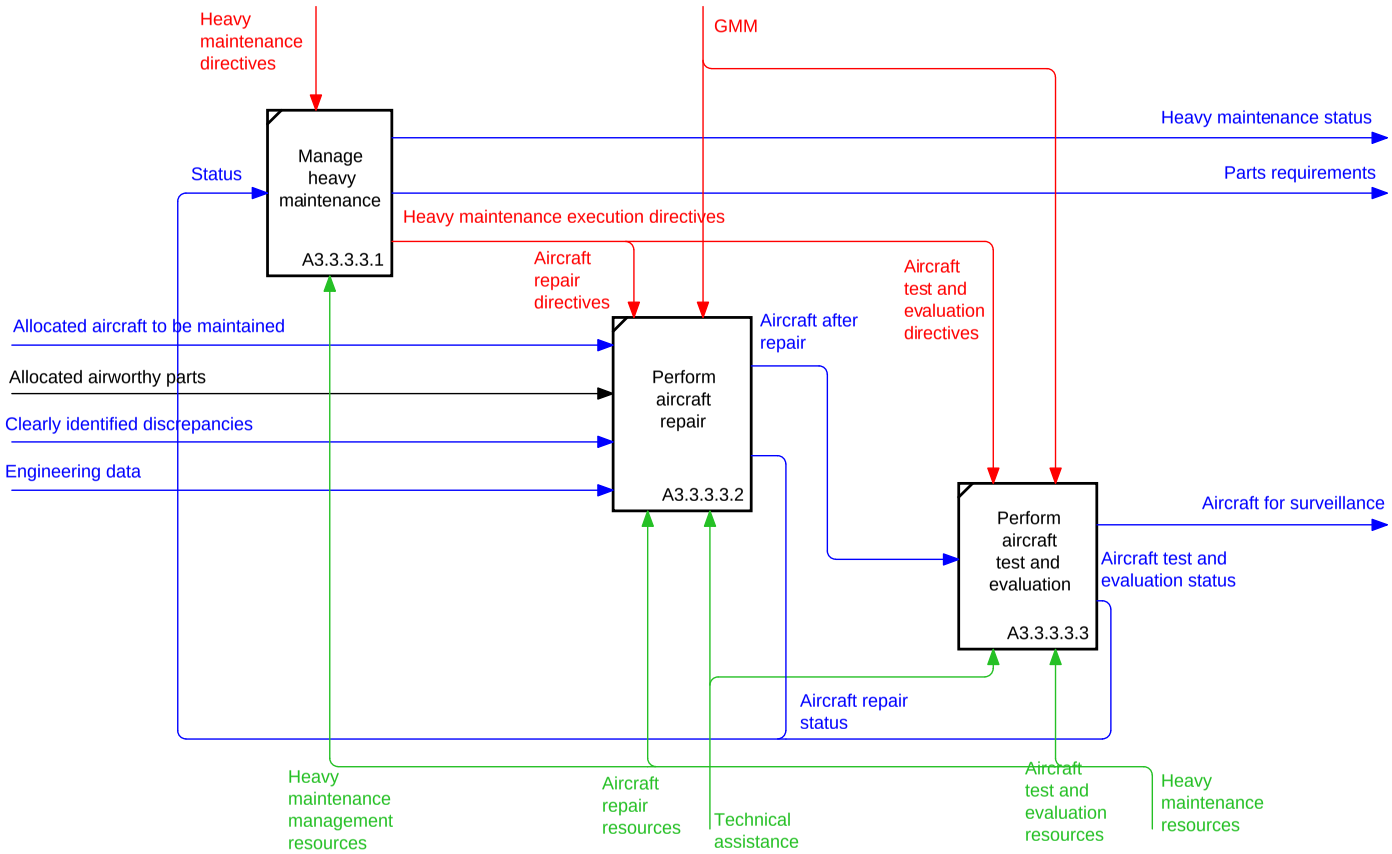

NODE:	TITLE:	NUMBER:
A3.3.3.3	Perform heavy maintenance	P. 31

5.31 A3.3.3.3—PERFORM HEAVY MAINTENANCE.

5.31.1 A3.3.3.3.1—Manage Heavy Maintenance.

This function directs, schedules, monitors, and coordinates the following activities of heavy maintenance:

- Perform aircraft repair
- Perform aircraft test and evaluation

It provides directives, defines requirements and controls for the execution of those activities, and ensures that the execution is accomplished in accordance with company policies and procedures and any required regulations for these activities.

5.31.2 A3.3.3.3.2—Perform Aircraft Repair.

This function captures the process of correcting the discrepancies following the 14 CFR Part 135 certificate holder maintenance program.

5.31.3 A3.3.3.3.3—Perform Aircraft Test and Evaluation.

This function tests and evaluates the performance of the aircraft after maintenance is completed.

USED AT:	AUTHOR: Part 135 Modeling Team	DATE: 10/1/2008	WORKING	READER	DATE	CONTEXT:
	PROJECT: Part 135 Certificate Holder Functional Model	REV: 1/16/2009	DRAFT			
			RECOMMENDED			
	NOTES: 1 2 3 4 5 6 7 8 9 10		PUBLICATION			A3.3.3

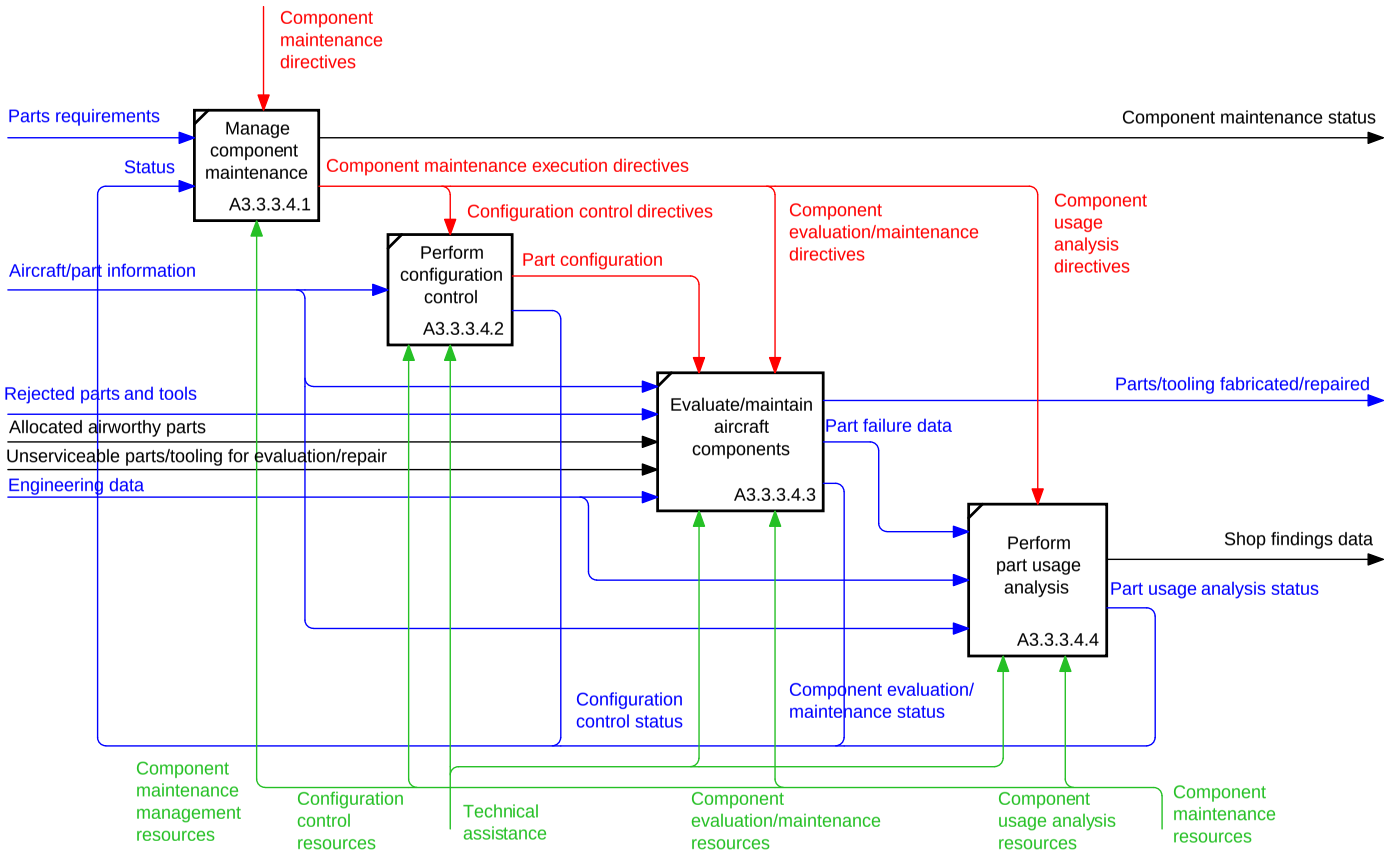

NODE:	TITLE:	NUMBER:
A3.3.3.4	Perform component maintenance	P.32

5.32 A3.3.3.4—PERFORM COMPONENT MAINTENANCE.

5.32.1 A3.3.3.4.1—Manage Component Maintenance.

This function directs, schedules, and coordinates the following activities of component maintenance:

- Perform configuration control
- Evaluate/maintain aircraft components
- Perform part usage analysis

It provides directives, defines requirements and controls for the execution of those activities, and ensures that the execution is accomplished in accordance with company policies and procedures and any required regulations for these activities.

5.32.2 A3.3.3.4.2—Perform Configuration Control.

This function analyzes the part requirements and part specifications and configures the strategies used to provide serviceable parts for aircraft maintenance. The following factors should be considered to perform this function:

- Regulations
- ETOPs
- Lower Landing Minimums
- Reduced Vertical Separation Minimum airspace (RVSM) requirements
- Manufacturer part numbers
- Part record keeping
- Part effectiveness
- Modification status
- Life limits
- Interchangeability between manufacturers
- Internal and alternate part numbers

5.32.3 A3.3.3.4.3—Evaluate/Maintain Aircraft Components.

This function inspects and maintains the serviceable parts for aircraft maintenance and also provides failure data for future part-tracking and analysis purposes. The following factors should be considered to perform this function.

- Part types, such as consumable or rotatable
- Part status, such as quarantined or in storage
- Compatibility of consumables
- Alternate process material substitution
- Technical Standard Orders (TSO)
- Electrostatic Discharge (ESD)
- Part removal tracking records
- Precision Measurement Equipment Tooling calibration
- Environmental control and facilities

This function also includes in-house tool calibration and fabrication.

5.32.4 A3.3.3.4.4—Perform Part Usage Analysis.

This function tracks and analyzes the part usage information and monitors and controls their usage conditions. Examples of parts usage information include:

- Vendor lead time (a.k.a., turn time)
- ATA chapter and code, if applicable
- Shelf life
- Component usage analysis
- Receiving inspection
- Technical control of reliability critical parts
- Condition monitoring (i.e., oil consumption, engine vibration monitoring, Full Authority Digital Engine Control/Electronic Engine Control data analysis)

USED AT:	AUTHOR: Part 135 Modeling Team	DATE: 10/1/2008	WORKING	READER	DATE	CONTEXT:
	PROJECT: Part 135 Certificate Holder Functional Model	REV: 1/16/2009	DRAFT			
			RECOMMENDED			
	NOTES: 1 2 3 4 5 6 7 8 9 10		PUBLICATION			A3

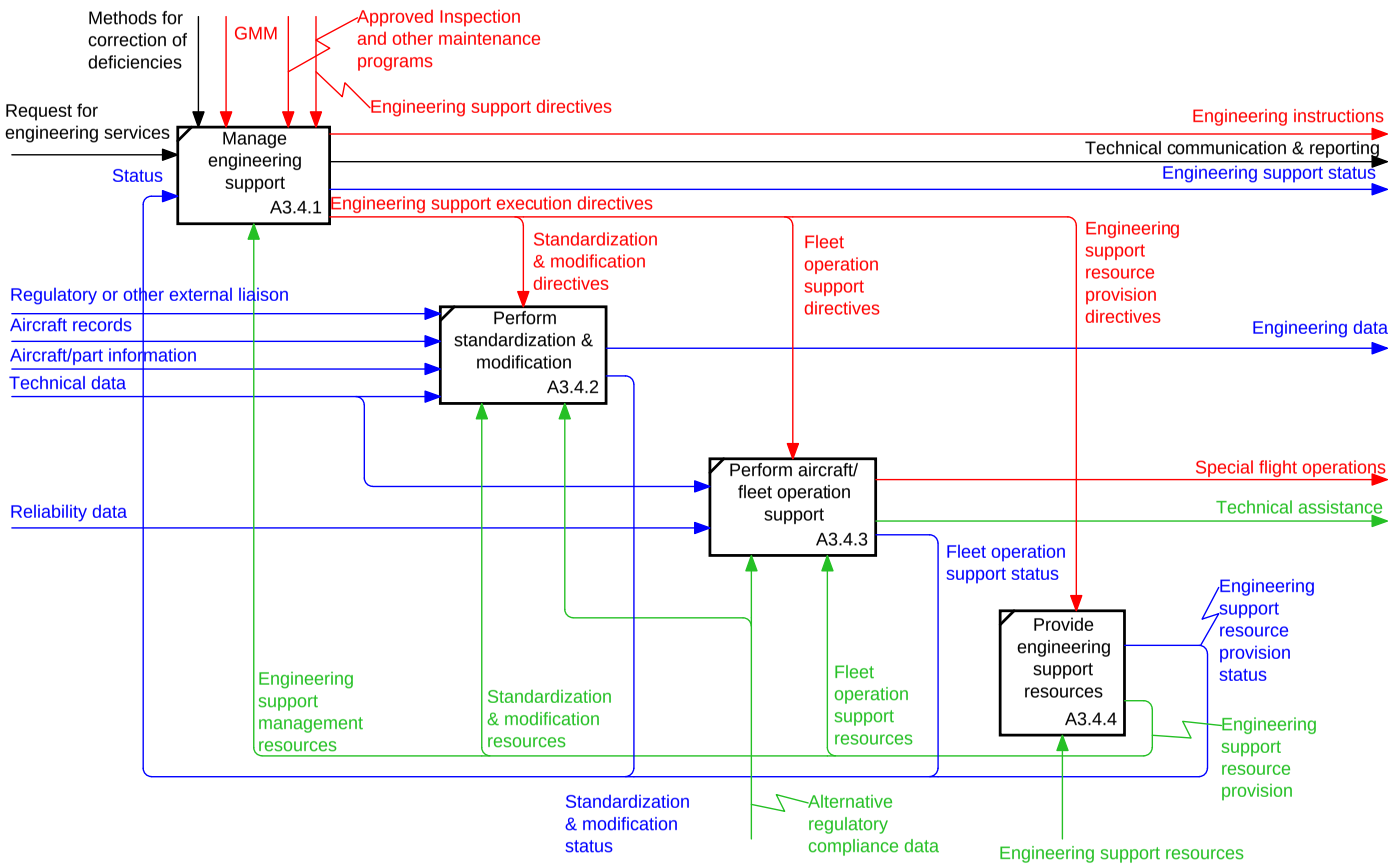

NODE:	TITLE:	NUMBER:
A3.4	Obtain engineering support	P. 33

5.33 A3.4—OBTAIN ENGINEERING SUPPORT.

5.33.1 A3.4.1—Manage Engineering Support.

This function directs, schedules, and coordinates the following activities of engineering support:

- Perform standardization & modification
- Perform fleet operation support

It provides directives, defines requirements and controls for the execution of those activities, and ensures that the execution is accomplished in accordance with company policies and procedures and any required regulations for these activities.

5.33.2 A3.4.2—Perform Standardization & Modification.

This function develops standards and performs modifications to support new and existing aircraft or fleet. This includes:

- Differences, i.e., different aircraft/engine combination
- Options
    - Passenger service items
    - Seating configurations
    - Cabin avionics

5.33.3 A3.4.3—Perform Aircraft/Fleet Operation Support.

This function provides engineering assistance and advice for aircraft maintenance to ensure the data and operating procedures used for aircraft maintenance meet the engineering requirements. This function may be accomplished by the Original Equipment Manufacturer (OEM). This function supports ongoing operations of aircraft/fleet. This includes:

- Technical interpretation
- Technical assistance
- Repair data
- Engineering orders
- Airworthiness Directives/Service Bulletins

- Manual, task cards
- Special flight operations
- Maintenance plans
- Adding existing aircraft type/new aircraft type to fleet
- Alternate Means of Compliance (AMOC)
- Exemption deviations and waivers
- Reliability data
- Warranty recommendations
- Emergency accident/incident data
- Equivalents (tools/equipment/materials)
- Owner-produced parts

USED AT:	AUTHOR: Part 135 Modeling Team	DATE: 10/1/2008	WORKING	READER	DATE	CONTEXT:
	PROJECT: Part 135 Certificate Holder Functional Model	REV: 1/16/2009	DRAFT			
			RECOMMENDED			
	NOTES: 1 2 3 4 5 6 7 8 9 10		PUBLICATION			A0

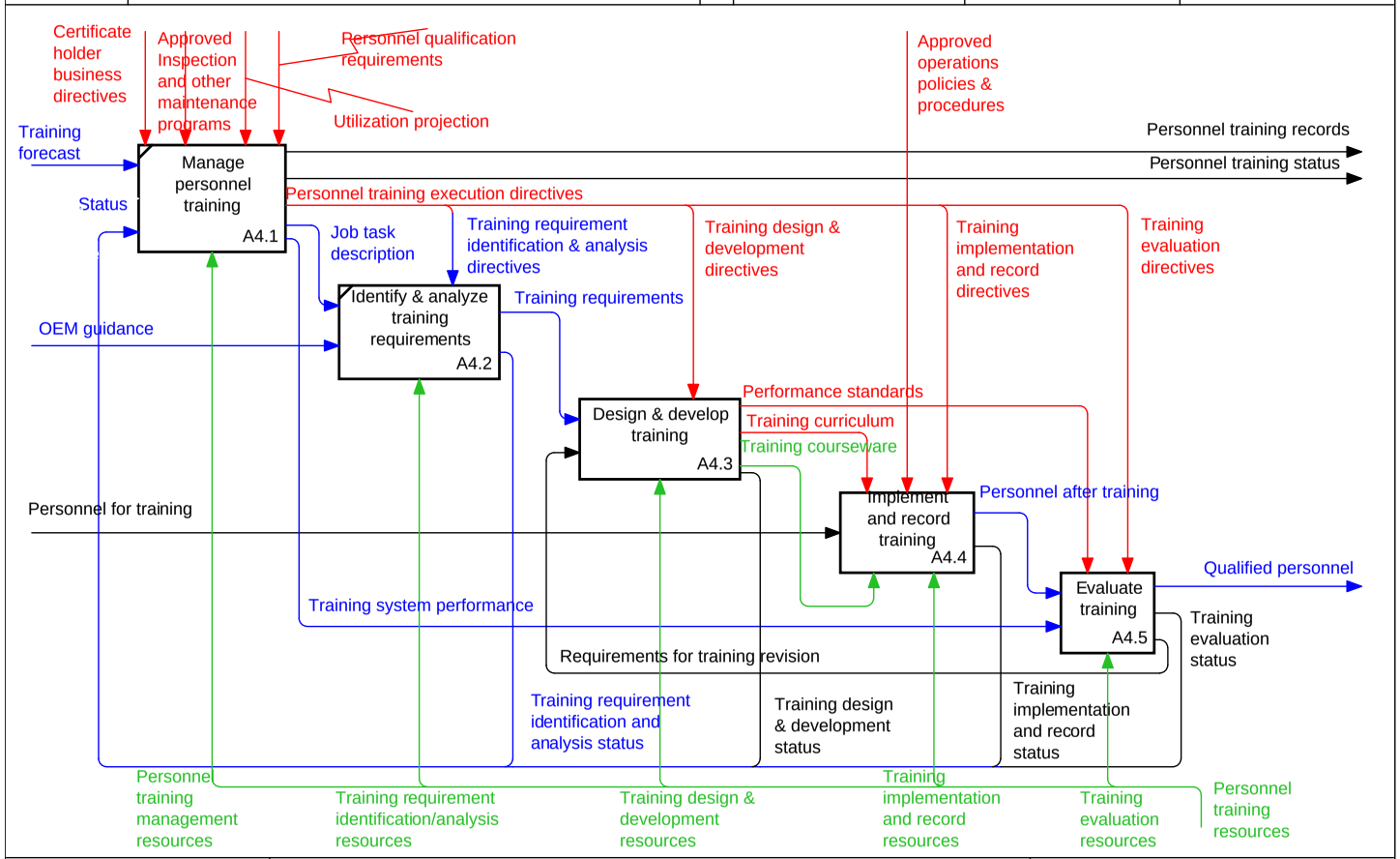

NODE:	TITLE:	NUMBER:
A4	Perform personnel training	P. 34

5.34 A4—PERFORM PERSONNEL TRAINING.

5.34.1 A4.1—Manage Personnel Training.

This function directs, schedules, and coordinates the following activities of all company personnel training:

- Identify & analyze training requirements
- Design & develop training
- Implement and record training
- Evaluate training

It provides directives, defines requirements and controls for the execution of those activities, and ensures that the execution is accomplished in accordance with company policies and procedures and any required regulations for these activities, including outsourced training.

5.34.2 A4.2—Identify & Analyze Training Requirements.

This function performs job task analysis to identify and analyze the skills and knowledge that require training based on job task requirements and personnel performance and qualification.

5.34.3 A4.3—Design & Develop Training.

This function designs, develops, and sequences learning objectives and qualification standards and creates training materials (e.g., curriculum, instructor manuals, student instructional materials, assessment instruments) to conduct training.

This function also identifies and determines the most appropriate and cost-effective method for developing or obtaining the training, such as the use of internal staff and facilities and/or outsource training providers.

5.34.4 A4.4—Implement and Record Training.

This function delivers the required knowledge, methods, procedures, and skills to personnel by using various means such as classroom sessions, computer, simulator, training devices, or actual aircraft. This function includes the creation and maintenance of records for training activities.

5.34.5 A4.5—Evaluate Training.

This function collects, analyzes, and interprets systematic training information, such as:

- Course prerequisite
- Course content
- Course objectives
- Learning outcomes
- Student demonstration of a required level of knowledge in a subject
- Student feedback on the application of the knowledge and skills learned in the training programs to practical situations

This training information can be used to:

- Improve training effectiveness
- Determine whether training objectives/goals are met
- Assess the return on investment of training
- Improve processes for acquiring, developing, and delivering future training

USED AT:	AUTHOR: Part 135 Modeling Team	DATE: 10/1/2008	WORKING	READER	DATE	CONTEXT:
	PROJECT: Part 135 Certificate Holder Functional Model	REV: 1/16/2009	DRAFT			
			RECOMMENDED			
	NOTES: 1 2 3 4 5 6 7 8 9 10		PUBLICATION			A4

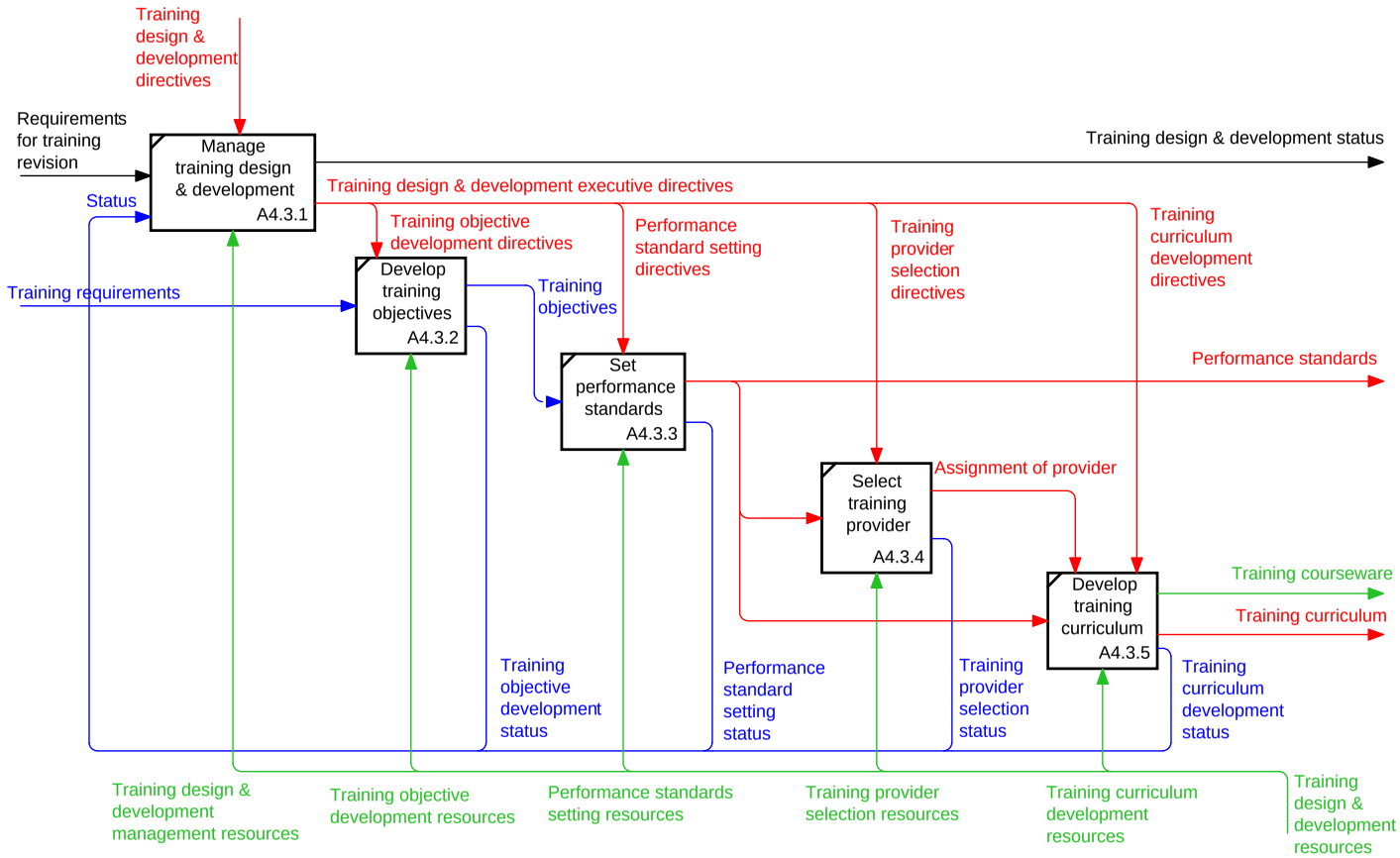

NODE:	TITLE:	NUMBER:
A4.3	Design & develop training	P. 35

5.35 A4.3—DESIGN & DEVELOP TRAINING.

5.35.1 A4.3.1—Manage Training Design & Development.

This function directs, schedules, and coordinates the following activities of training design and development:

- Develop training objectives
- Set performance standards
- Select training provider
- Develop training curriculum

It provides directives, defines requirements and controls for the execution of those activities, and ensures that the execution is accomplished in accordance with company policies and procedures and any required regulations for these activities.

5.35.2 A4.3.2—Develop Training Objectives.

This function clarifies the target of the training and the skill or performance level personnel should have after the training to meet the company requirements.

5.35.3 A4.3.3—Set Performance Standards.

This function establishes the standard level of performance that the personnel should achieve after the training is completed.

5.35.4 A4.3.4—Select Training Provider.

This function selects the most appropriate and cost-effective training provider based on the training requirements.

5.35.5 A4.3.5—Develop Training Curriculum.

This function creates a complete training agenda specific to an aircraft type or position (i.e., a crewmember, mechanic, or dispatcher) or a category of training (i.e., new hire indoctrination).

USED AT:	AUTHOR: Part 135 Modeling Team	DATE: 10/1/2008	WORKING	READER	DATE	CONTEXT:
	PROJECT: Part 135 Certificate Holder Functional Model	REV: 1/16/2009	DRAFT			
			RECOMMENDED			
	NOTES: 1 2 3 4 5 6 7 8 9 10		PUBLICATION			A4

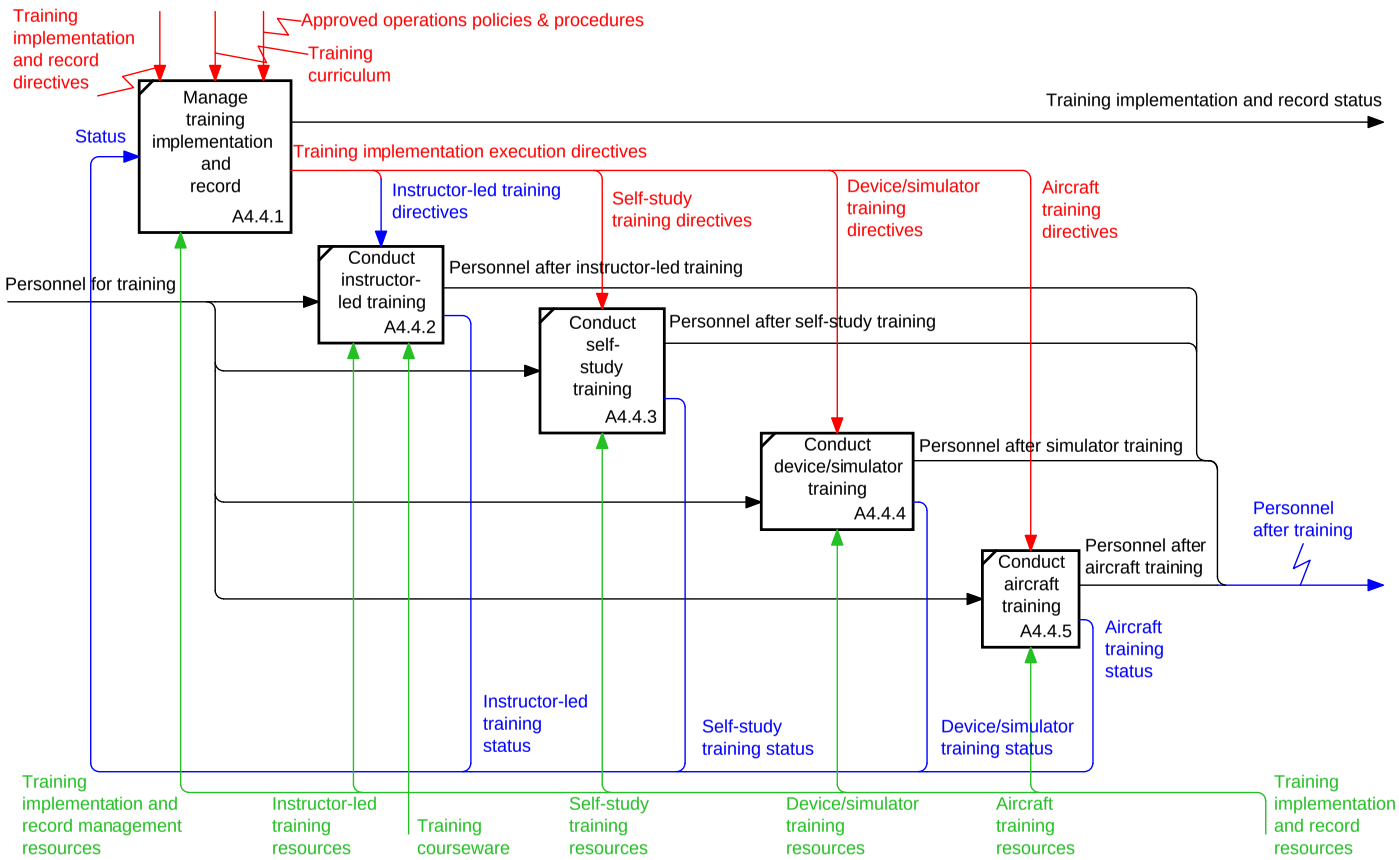

NODE:	TITLE:	NUMBER:
A4.4	Implement and record training	P. 36

5.36 A4.4—IMPLEMENT AND RECORD TRAINING.

5.36.1 A4.4.1—Manage Training Implementation and Record.

This function directs, schedules, and coordinates the following activities of training implementation and record:

- Conduct instructor-led training
- Conduct self-study training
- Conduct device/simulator training
- Conduct aircraft training

It provides directives, defines requirements and controls for the execution of those activities, and ensures that the execution is accomplished in accordance with company policies and procedures and any required regulations for these activities. This function includes the creation and maintenance of records for training activities.

5.36.2 A4.4.2—Conduct Instructor-Led Training.

This function delivers training to personnel through instructor-led classroom sessions, on-the-job training (OJT) or multimedia presentation/facilitation. Instructors use effective presentation, facilitation, communication skills, and OJT to exhibit knowledge of subject matter content to accomplish lesson objectives.

5.36.3 A4.4.3—Conduct Self-Study Training.

This function delivers training to personnel through various means, such as computer software, books, and other media.

5.36.4 A4.4.4—Conduct Device/Simulator Training.

This function delivers training to personnel through various kinds of devices/simulators.

5.36.5 A4.4.5—Conduct Aircraft Training.

This function uses aircraft instructions to deliver training to personnel, including pilots, mechanics, dispatchers, and flight attendants, as applicable.

USED AT:	AUTHOR: Part 135 Modeling Team	DATE: 10/1/2008	WORKING	READER	DATE	CONTEXT:
	PROJECT: Part 135 Certificate Holder Functional Model	REV: 1/16/2009	DRAFT			
			RECOMMENDED			
	NOTES: 1 2 3 4 5 6 7 8 9 10		PUBLICATION			A4

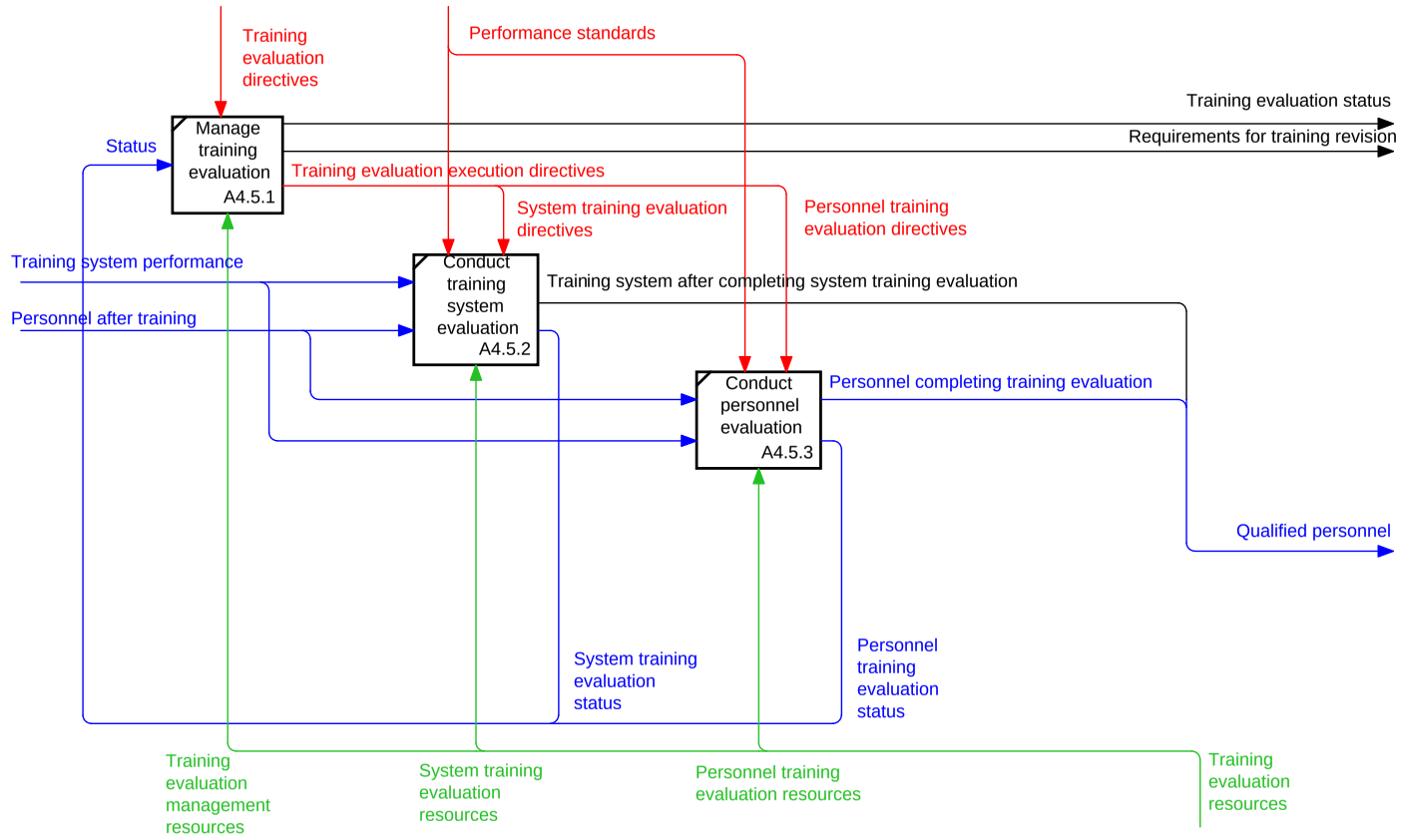

NODE:	TITLE:	NUMBER:
A4.5	Evaluate training	P.37

5.37 A4.5—EVALUATE TRAINING.

5.37.1 A4.5.1—Manage Training Evaluation.

This function directs, schedules, and coordinates the following activities of training evaluation:

- Conduct training system evaluation
- Conduct personnel evaluation

It provides directives, defines requirements and controls for the execution of those activities, and ensures that the execution is accomplished in accordance with company policies and procedures and any required regulations for these activities.

5.37.2 A4.5.2—Conduct Training System Evaluation.

This function evaluates the effectiveness of training system devices, methods, OJT, instructor-led training, etc.

5.37.3 A4.5.3—Conduct Personnel Evaluation.

This function evaluates personnel's competency, knowledge, and skills in operating, working, and dealing with aircraft equipment, aircraft systems, system operations, and aircraft.

USED AT:	AUTHOR: Part 135 Modeling Team	DATE: 10/1/2008	WORKING	READER	DATE	CONTEXT:
	PROJECT: Part 135 Certificate Holder Functional Model	REV: 1/16/2009	DRAFT			
			RECOMMENDED			
	NOTES: 1 2 3 4 5 6 7 8 9 10		PUBLICATION			A0

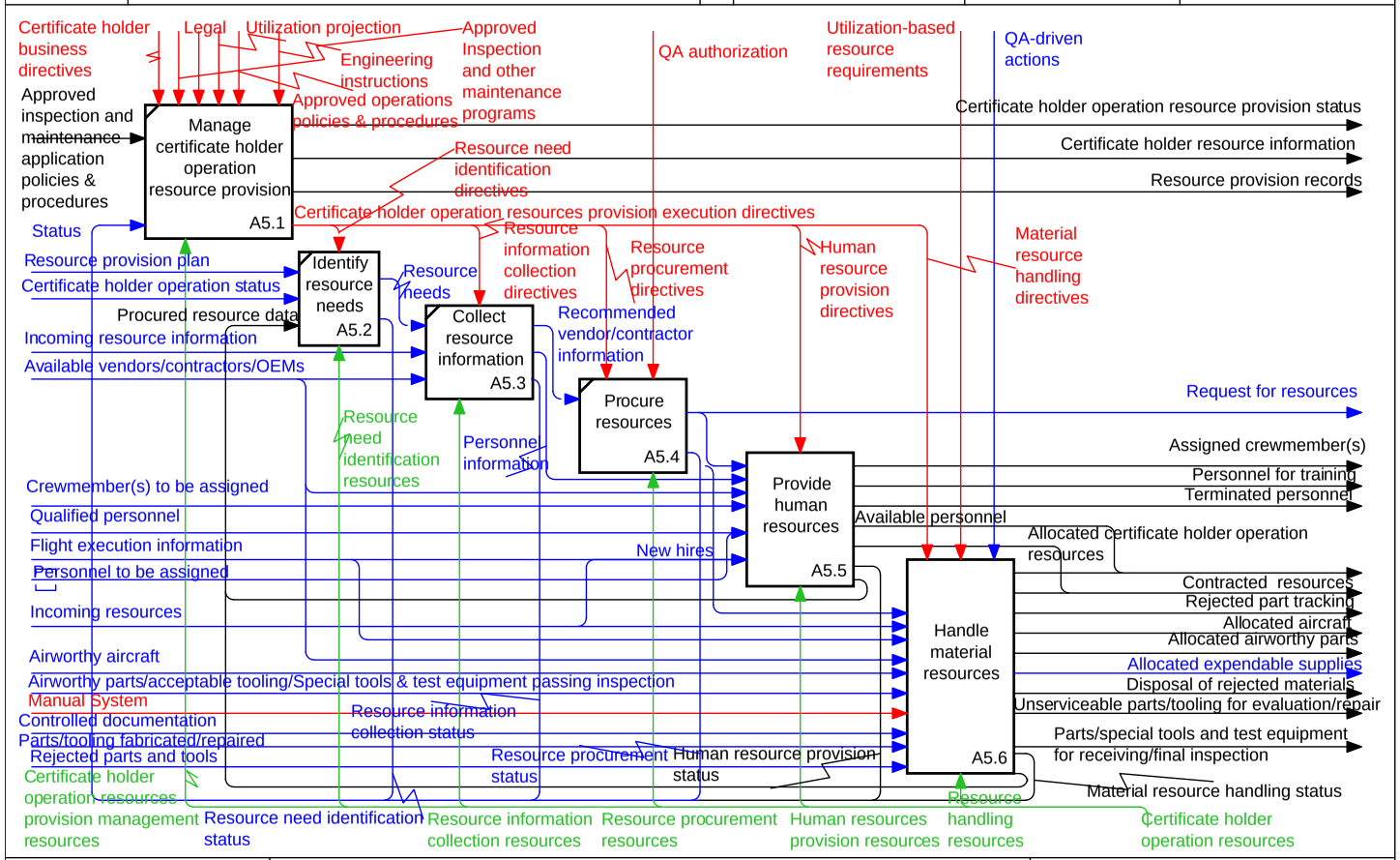

NODE:	TITLE:	NUMBER:
A5	Provide certificate holder operation resources	P. 38

5.38 A5—PROVIDE CERTIFICATE HOLDER OPERATION RESOURCES.

5.38.1 A5.1—Manage Certificate Holder Operation Resource Provision.

This function directs, schedules, and coordinates the following activities of certificate holder operation resource provision:

- Identify resource needs
- Collect resource information
- Procure resources
- Provide human resources
- Handle material resources

It provides directives, defines requirements and controls for the execution of those activities, and ensures that the execution is accomplished in accordance with company policies and procedures and any required regulations for these activities.

5.38.2 A5.2—Identify Resource Needs.

This function analyzes daily operational information and identifies the needs for resources to improve or maintain the operation performance.

5.38.3 A5.3—Collect Resource Information.

This function collects available external source data to identify desired vendors to procure required resources to meet the company needs. This function also collects personnel information for the human resource provision.

5.38.4 A5.4—Procure Resources.

This function contacts providers (vendors and/or contractors) to procure required resources to contract work.

5.38.5 A5.5—Provide Human Resources.

This function hires new personnel and/or reassigns existing personnel to provide human resources to meet company needs.

5.38.6 A5.6—Handle Material Resources.

This function performs handling, receiving, storing, labeling, packing, and shipping of parts and tools, as well as special processing such as dangerous goods, ESD, and other special handling, i.e., special storage requirements and material safety data sheet compliance.

USED AT:	AUTHOR: Part 135 Modeling Team	DATE: 10/1/2008	WORKING	READER	DATE	CONTEXT:
	PROJECT: Part 135 Certificate Holder Functional Model	REV: 1/16/2009	DRAFT			
			RECOMMENDED			
	NOTES: 1 2 3 4 5 6 7 8 9 10		PUBLICATION			A5

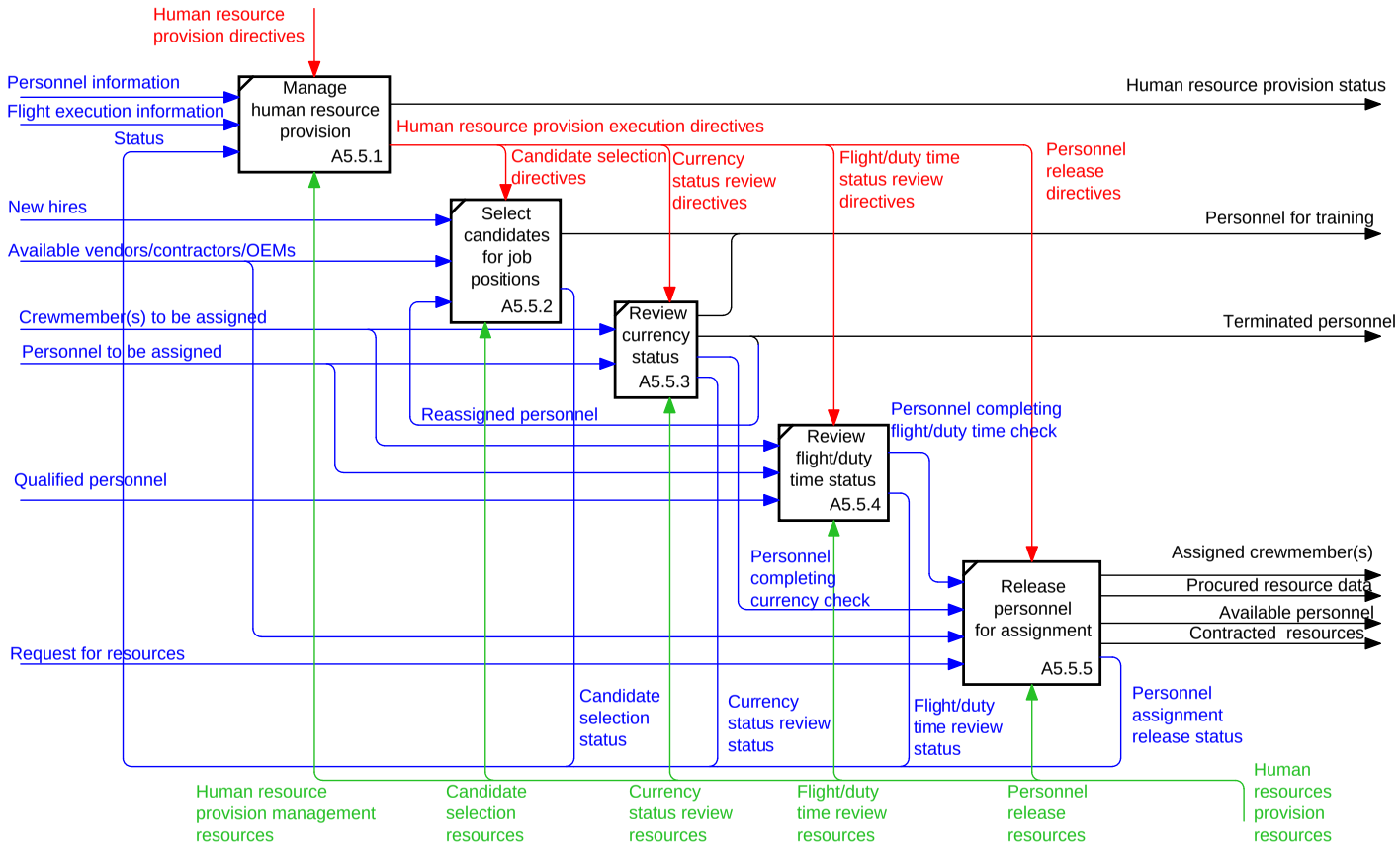

NODE:	TITLE:	NUMBER:
A5.5	Provide human resources	P.39

5.39 A5.5—PROVIDE HUMAN RESOURCES.

5.39.1 A5.5.1—Manage Human Resource Provision.

This function directs, schedules, and coordinates the following activities of human resource provision:

- Select candidates for job positions
- Review currency status
- Review flight/duty time status
- Release personnel for assignment

It provides directives, defines requirements and controls for the execution of those activities, and ensures that the execution is accomplished in accordance with company policies and procedures and any required regulations for these activities.

5.39.2 A5.5.2—Select Candidates for Job Positions.

This function screens candidates for employment based on the following criteria:

- Background check, if applicable
- Pilot Record Improvement Act
- Department of Transportation (DOT) required drug screening
- Interview and skill screening (i.e., demonstration, practical test)
- Certificate verification, if applicable
- Qualifications
- Experience (multiengine rating)
- Prerequisites requirement

5.39.3 A5.5.3—Review Currency Status.

This function monitors the compliance with company requirements, e.g., training currency, experience currency, and medical currency, if required, for existing employees.

5.39.4 A5.5.4—Review Flight/Duty Time Status.

This function monitors the compliance with duty time restrictions, including flight, maintenance, etc.

5.39.5 A5.5.5—Release Personnel for Assignment.

This function releases trained, qualified, and authorized personnel for duty.

USED AT:	AUTHOR: Part 135 Modeling Team	DATE: 10/1/2008	WORKING	READER	DATE	CONTEXT:
	PROJECT: Part 135 Certificate Holder Functional Model	REV: 1/16/2009	DRAFT			
			RECOMMENDED			
	NOTES: 1 2 3 4 5 6 7 8 9 10		PUBLICATION			A5

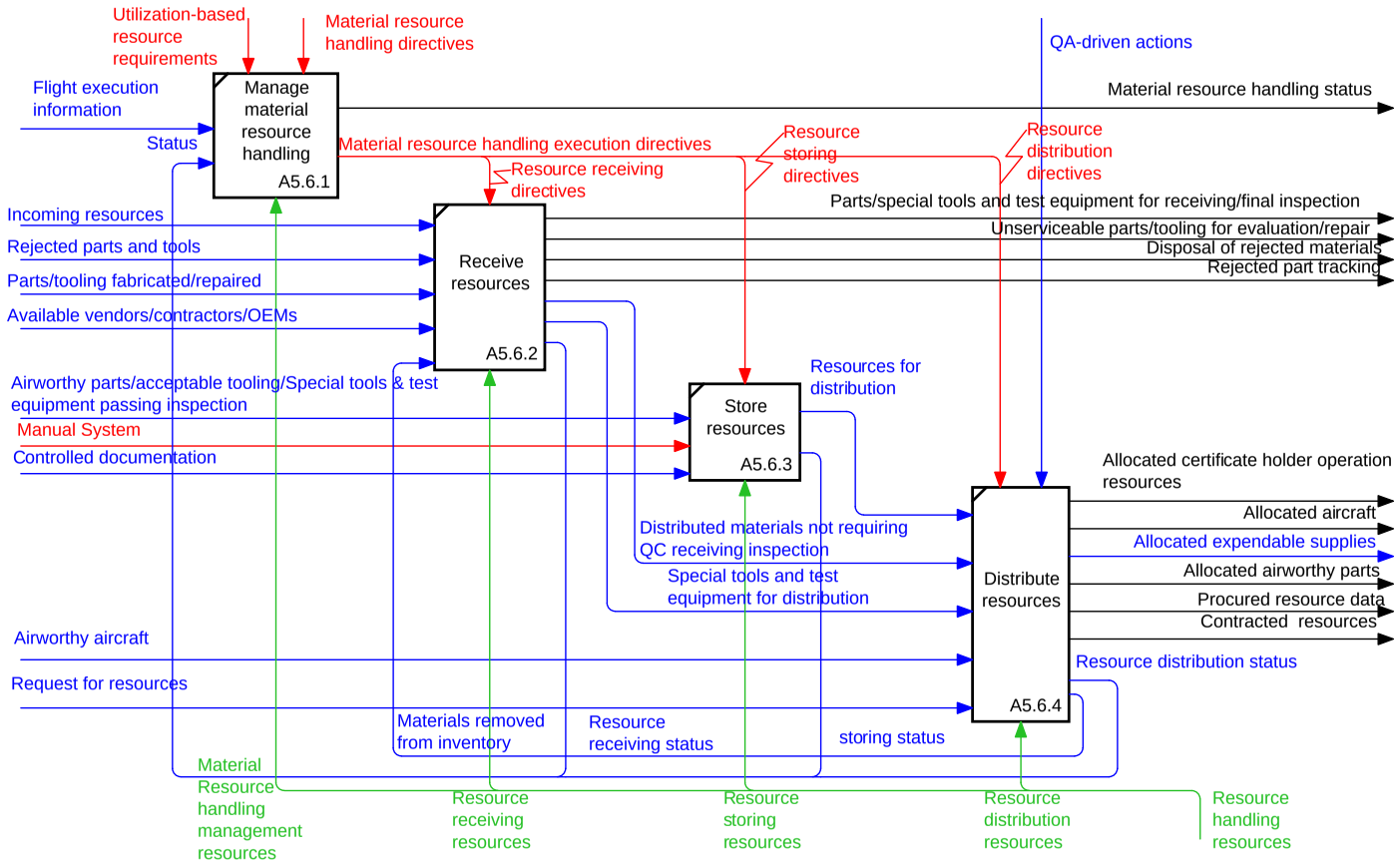

NODE:	TITLE:	NUMBER:
A5.6	Handle material resources	P.40

5.40 A5.6—HANDLE MATERIAL RESOURCES.

5.40.1 A5.6.1—Manage Material Resource Handling.

This function directs, schedules, and coordinates the following activities of material resource handling:

- Receive resources
- Store resources
- Distribute resources

It provides directives, defines requirements and controls for the execution of those activities, and ensures that the execution is accomplished in accordance with company policies and procedures and any required regulations for these activities.

5.40.2 A5.6.2—Receive Resources.

This function captures the receiving process starting with parts/equipment coming to the door from either outside sources (i.e., vendors, contractors) or inside sources (i.e., hangars, shops) that are still being sent for inspection or being disposed as rejected materials.

5.40.3 A5.6.3—Store Resources.

This function provides for the storage of serviceable resources before the resources are distributed for use, including inventory control and storing of technical publications.

5.40.4 A5.6.4—Distribute Resources.

This function allocates available serviceable resources to operational sites to support certificate holder operations.

6. GLOSSARY.

This glossary provides the definitions of information/objects shown as arrows on the diagrams followed by the arrow connections to show the information/object flows in the model. As stated in section 2, the arrows are divided into four categories: Input (I), Control (C), Output (O), and Mechanism (M).

Abnormal aircraft before V1: Aircraft experiencing an unexpected situation during the takeoff segment before its speed reaches V1.

- Arrow Source (O): A25232—Perform takeoff prior to V1
- Arrow Destination (I): A2545—Perform postarrival ground operations

Abnormal aircraft in predeparture: Aircraft experiencing an unexpected situation during predeparture process.

- Arrow Source (O): A2522—Perform predeparture ground operations
- Arrow Destination (I): A2545—Perform postarrival ground operations

Acceptance of payload directives: A set of policies, procedures, and instructions that directs the payload acceptance.

- Arrow Destination (C): A1324—Accept payload

Accepted maintenance records: The set of documents that records the maintenance activities performed.

- Arrow Source (O): A323—Perform quality control
- Arrow Destination (I): A172—Perform recordkeeping & reporting

Administrative policies & procedures: Policies and procedures regarding nontechnical issues such as:

- dress code
- leave policy
- retirement
- work hours
- pay and benefits
- medical care
- holidays & vacation
- awards

This also includes employee performance evaluation policies and procedures.

- Arrow Source (O): A155—Develop administrative policies & procedures
- Arrow Destination (O): A5—Provide certificate holder operation resources

Administrative policy & procedure development directives: A set of policies, procedures, and instructions that directs the administrative policy & procedure development.

- Arrow Destination (C): A155—Develop administrative policies & procedures

Administrative policy & procedure development status: Continuously updated information regarding the conditions that exist in the administrative policy & procedure development.

- Arrow Source (O): A155—Develop administrative policies & procedures

Administrative policy & procedure development resources: The elements necessary for the successful accomplishment of administrative policy & procedure development. The elements are defined as properly trained and certified personnel, adequate facilities, required information, material support, and any other required resources, including outside resources, such as contractors, OEMs, and vendors, to accomplish the activity.

- Arrow Destination (M): A155—Develop administrative policies & procedures

Air transportation directives: A set of policies, procedures, and instructions to direct air transportation.

- Arrow Source (O): A21—Manage air transportation

Air transportation management resources: The elements necessary for the successful accomplishment of air transportation management. The elements are defined as properly trained and certified personnel, adequate facilities, required information, material support, and any other required resources, including outside resources, such as contractors, OEMs, and vendors, to accomplish the activity.

- Arrow Destination (M): A21—Manage air transportation

Air transportation status: Continuously updated information regarding the conditions that exist in the air transportation.

- Arrow Source (O): A21—Manage air transportation
- Arrow Destination (I): A1334—Monitor flight

Air transportation resources: The elements necessary for the successful accomplishment of air transportation. The elements are defined as properly trained and certified personnel, adequate facilities, required information, materials, equipment, tools, and any other required resources, including outside resources, such as contractors, OEMs, and vendors, to accomplish the activity.

- Arrow Destination (M): A2—Perform air transportation

Aircraft: A device that is used or intended to be used for flight in the air (14 CFR Part 1).

- Arrow Destination (M): A234—Perform in-flight services
- Arrow Destination (M): A235—Perform deplaning services
- Arrow Destination (M): A2334—Provide seating services

Aircraft aborted climb: Aircraft after preplanned climb maneuver is terminated.

- Arrow Source (O): A25242—Perform initial climb operations
- Arrow Destination (I): A25422—Perform initial descent operations
- Arrow Source (O): A25243—Perform normal climb operations

Aircraft aborted descent: Aircraft that preplanned descent maneuver is terminated.

- Arrow Source (O): A25422—Perform initial descent operations
- Arrow Destination (I): A25243—Perform normal climb operations
- Arrow Source (O): A25423—Perform descent and approach operations

Aircraft after approach segment: Aircraft just completing approach flight maneuver.

- Arrow Source (O): A2543—Perform approach operations
- Arrow Destination (I): A2544—Perform landing operations

Aircraft after cargo loaded/unloaded: Aircraft after cargo is placed on board or unloaded after the aircraft parks.

- Arrow Source (O): A2434—Load/unload cargo

Aircraft after climb segment: Aircraft just completing climb flight maneuver.

- Arrow Source (O): A25243—Perform normal climb operations
- Arrow Destination (I): A253—Perform cruise operations

Aircraft after cruise segment: Aircraft just completing enroute cruise flight maneuver.

- Arrow Source (O): A253—Perform cruise operations
- Arrow Destination (I): A25422—Perform initial descent operations

Aircraft after descent segment: Aircraft just completing descent flight maneuver.

- Arrow Source (O): A25423—Perform descent and approach operations
- Arrow Destination (I): A2543—Perform approach operations

Aircraft after fuel replenishment: Aircraft after fuel is replenished.

- Arrow Source (O): A244—Replenish fuel

Aircraft after ground services: Aircraft after being loaded/unloaded, deiced, or cleaned.

- Arrow Source (O): A246—Perform deicing/anti-icing services
- Arrow Destination (I): A2522—Perform predeparture ground operations

Aircraft after initial climb: Aircraft just completing initial climb flight maneuver.

- Arrow Source (O): A25242—Perform initial climb operations
- Arrow Destination (I): A25243—Perform normal climb operations

Aircraft after initial descent: Aircraft just completing initial descent flight maneuver.

- Arrow Source (O): A25422—Perform initial descent operations
- Arrow Destination (I): A25423—Perform descent and approach operations

Aircraft after landing segment: Aircraft just completing landing maneuver.

- Arrow Source (O): A2544—Perform landing operations
- Arrow Destination (I): A2545—Perform postarrival ground operations

Aircraft after line services: Aircraft after its supplies are replenished and its cabin is cleaned.

- Arrow Source (O): A245—Perform line services

Aircraft after predeparture segment: Aircraft just completing predeparture operations at departure airport.

- Arrow Source (O): A2522—Perform predeparture ground operations
- Arrow Destination (I): A25232—Perform takeoff prior to V1

Aircraft after repair: Aircraft after its discrepancies are corrected.

- Arrow Source (O): A33332—Perform aircraft repair
- Arrow Destination (I): A33333—Perform aircraft test and evaluation

Aircraft after takeoff segment: Aircraft just completing takeoff flight maneuver.

- Arrow Source (O): A25233—Perform takeoff at/after V1
- Arrow Destination (I): A25242—Perform initial climb operations

Aircraft assignment: Assignment of aircraft for carrying out certain flight tasks.

- Arrow Source (O): A1326—Assign aircraft

Aircraft assignment directives: A set of policies, procedures, and instructions that directs aircraft assignment.

- Arrow Destination (C): A1326—Assign aircraft

Aircraft assignment status: Continuously updated information regarding the conditions that exist in the aircraft assignment.

- Arrow Source (O): A1326—Assign aircraft

Aircraft assignment resources: The elements necessary for the successful accomplishment of aircraft assignment. The elements are defined as properly trained and certified personnel, adequate facilities, required information, materials, equipment, tools, and any other required resources, including outside resources, such as contractors, OEMs, and vendors, to accomplish the activity.

- Arrow Destination (M): A1326—Assign aircraft

Aircraft discrepancy detection directives: A set of policies, procedures, and instructions that directs the detection of aircraft discrepancy.

- Arrow Destination (C): A3322—Detect aircraft discrepancies

Aircraft discrepancy detection status: Continuously updated information regarding the conditions that exist in the aircraft discrepancy detection.

- Arrow Source (O): A3322—Detect aircraft discrepancies

Aircraft discrepancy detection resources: The elements necessary for the successful accomplishment of aircraft discrepancy detection. The elements are defined as properly trained and certified personnel, adequate facilities, required information, materials, equipment, tools, and any other required resources, including outside resources, such as contractors, OEMs, and vendors, to accomplish the activity.

- Arrow Destination (M): A3322—Detect aircraft discrepancies

Aircraft discrepancy diagnosis directives: A set of policies, procedures, and instructions that directs the diagnosis of aircraft discrepancy.

- Arrow Destination (C): A3323—Diagnose aircraft discrepancies

Aircraft discrepancy diagnosis status: Continuously updated information regarding the conditions that exist in the aircraft discrepancy diagnosis.

- Arrow Source (O): A3323—Diagnose aircraft discrepancies

Aircraft discrepancy diagnosis resources: The elements necessary for the successful accomplishment of aircraft discrepancy diagnosis. The elements are defined as properly trained and certified personnel, adequate facilities, required information, materials, equipment, tools, and any other required resources, including outside resources, such as contractors, OEMs, and vendors, to accomplish the activity.

- Arrow Destination (M): A3323—Diagnose aircraft discrepancies

Aircraft discrepancy evaluation directives: A set of policies, procedures, and instructions that directs the evaluation of aircraft discrepancy.

- Arrow Destination (C): A3324—Evaluate aircraft discrepancies

Aircraft discrepancy evaluation status: Continuously updated information regarding the conditions that exist in the aircraft discrepancy evaluation.

- Arrow Source (O): A3324—Evaluate aircraft discrepancies

Aircraft discrepancy evaluation resources: The elements necessary for the successful accomplishment of aircraft discrepancy evaluation. The elements are defined as properly trained and certified personnel, adequate facilities, required information, materials, equipment, tools, and any other required resources, including outside resources, such as contractors, OEMs, and vendors, to accomplish the activity.

- Arrow Destination (M): A3324—Evaluate aircraft discrepancies

Aircraft dispatch directives: A set of policies, procedures, and instructions that directs aircraft dispatch.

- Arrow Destination (C): A1331—Manage aircraft dispatch

Aircraft dispatch execution directives: A set of policies, procedures, and instructions that directs the execution of aircraft dispatch.

- Arrow Source (O): A1331—Manage aircraft dispatch

Aircraft dispatch management resources: The elements necessary for the successful accomplishment of aircraft dispatch management. The elements are defined as properly trained

and certified personnel, adequate facilities, required information, material support, and any other required resources, including outside resources, such as contractors, OEMs, and vendors, to accomplish the activity.

- Arrow Destination (M): A1331—Manage aircraft dispatch

Aircraft dispatch status: Continuously updated information regarding the conditions that exist in the dispatching aircraft.

- Arrow Source (O): A1331—Manage aircraft dispatch

Aircraft dispatch resources: The elements necessary for the successful accomplishment of aircraft dispatch. The elements are defined as properly trained and certified personnel, adequate facilities, required information, materials, equipment, tools, and any other required resources, including outside resources, such as contractors, OEMs, and vendors, to accomplish the activity.

- Arrow Destination (M): A133—Dispatch aircraft

Aircraft evaluation execution directives: A set of policies, procedures, and instructions that directs the execution of aircraft evaluation.

- Arrow Source (O): A3321—Manage aircraft evaluation

Aircraft evaluation management resources: The elements necessary for the successful accomplishment of aircraft evaluation management. The elements are defined as properly trained and certified personnel, adequate facilities, required information, material support, and any other required resources, including outside resources, such as contractors, OEMs, and vendors, to accomplish the activity.

- Arrow Destination (M): A3321—Manage aircraft evaluation

Aircraft evaluation status: Continuously updated information regarding the conditions that exist in the aircraft evaluation.

- Arrow Source (O): A3321—Manage aircraft evaluation

Aircraft evaluation resources: The elements necessary for the successful accomplishment of aircraft evaluation. The elements are defined as properly trained and certified personnel, adequate facilities, required information, materials, equipment, tools, and any other required resources, including outside resources, such as contractors, OEMs, and vendors, to accomplish the activity.

- Arrow Destination (M): A332—Evaluate aircraft

Aircraft for step climb: Aircraft from cruise maneuver to climb maneuver.

- Arrow Source (O): A253—Perform cruise operations
- Arrow Destination (I): A25243—Perform normal climb operations

Aircraft for surveillance: Aircraft to be inspected during and after maintenance.

- Arrow Source (O): A3332—Perform line maintenance
- Arrow Destination (I): A323—Perform quality control
- Arrow Source (O): A33333—Perform aircraft test and evaluation

Aircraft maintenance directives: A set of policies, procedures, and instructions that directs the aircraft maintenance.

- Arrow Source (O): A331—Manage aircraft maintenance
- Arrow Destination (C): A331—Manage aircraft maintenance

Aircraft maintenance management resources: The elements necessary for the successful accomplishment of aircraft maintenance management. The elements are defined as properly trained and certified personnel, adequate facilities, required information, material support, and any required resources, including outside resources, such as contractors, OEMs, and vendors, to accomplish the activity.

- Arrow Destination (M): A331—Manage aircraft maintenance

Aircraft maintenance resources: The elements necessary for the successful accomplishment of aircraft maintenance. The elements are defined as properly trained and certified personnel, adequate facilities, required information, materials, equipment, tools, and any other required resources, including outside resources, such as contractors, OEMs, and vendors, to accomplish the activity.

- Arrow Destination (M): A33—Perform aircraft maintenance

Aircraft on go-around: Aircraft under the instruction for a pilot to abandon his approach to landing. Additional instructions may follow. Unless otherwise advised by ATC, a Visual Flight Rules (VFR) aircraft or an aircraft conducting visual approach should overfly the runway while climbing to traffic pattern altitude and enter the traffic pattern via the crosswind leg. A pilot on an Instrument Flight Rules (IFR) flight plan making an instrument approach should execute the published missed approach procedure or proceed as instructed by ATC.

- Arrow Source (O): A2544—Perform landing operations
- Arrow Destination (I): A25233—Perform takeoff at/after V1

Aircraft on missed approach: Aircraft under the maneuver conducted by a pilot when an instrument approach cannot be completed to a landing. The route of flight and altitude are shown on instrument approach procedure charts. A pilot executing a missed approach prior to the MAP

must continue along the final approach to the MAP. The pilot may climb immediately to the altitude specified in the missed approach procedure, unless otherwise instructed by ATC.

- Arrow Source (O): A2543—Perform approach operations
- Arrow Destination (I): A25233—Perform takeoff at/after V1

Aircraft operation directives: A set of policies, procedures, and instructions that directs operating flight.

- Arrow Destination (C): A251—Manage aircraft operations

Aircraft operation execution directives: A set of policies, procedures, and instructions that directs the execution of aircraft operations.

- Arrow Source (O): A251—Manage aircraft operations

Aircraft operation management resources: The elements necessary for the successful accomplishment of aircraft operation management. The elements are defined as properly trained and certified personnel, adequate facilities, required information, material support, and any other required resources, including outside resources, such as contractors, OEMs, and vendors, to accomplish the activity.

- Arrow Destination (M): A251—Manage aircraft operations

Aircraft operation: Continuously updated information regarding the conditions that exist in the flight operations.

- Arrow Source (O): A251—Manage aircraft operations

Aircraft operation resources: The elements necessary for the successful accomplishment of flight operations. The elements are defined as properly trained and certified personnel, adequate facilities, required information, materials, equipment, tools, and any other required resources, including outside resources, such as contractors, OEMs, and vendors, to accomplish the activity.

- Arrow Destination (M): A25—Perform aircraft operations

Aircraft records: The documents that record an aircraft's history for maintenance reference.

- Arrow Source (O): A172—Perform recordkeeping & reporting
- Arrow Destination (I): A331—Manage aircraft maintenance
- Arrow Destination (I): A342—Perform standardization & modification
- Arrow Destination (I): A3322—Detect aircraft discrepancies
- Arrow Destination (I): A3323—Diagnose aircraft discrepancies

Aircraft repair directives: A set of policies, procedures, and instructions that directs aircraft repair.

- Arrow Destination (C): A33332—Perform aircraft repair

Aircraft repair: Continuously updated information regarding the conditions that exist in the aircraft repair.

- Arrow Source (O): A33332—Perform aircraft repair

Aircraft repair resources: The elements necessary for the successful accomplishment of aircraft repair. The elements are defined as properly trained and certified personnel, adequate facilities, required information, materials, equipment, tools, and any other required resources, including outside resources, such as contractors, OEMs, and vendors, to accomplish the activity.

- Arrow Destination (M): A33332—Perform aircraft repair

Aircraft test directives: A set of policies, procedures, and instructions that directs aircraft testing.

- Arrow Destination (C): A33333—Perform aircraft test and evaluation

Aircraft test and evaluation status: Continuously updated information regarding the conditions that exist in the aircraft testing and evaluation.

- Arrow Source (O): A33333—Perform aircraft test and evaluation

Aircraft test and evaluation resources: The elements necessary for the successful accomplishment of aircraft testing. The elements are defined as properly trained and certified personnel, adequate facilities, required information, materials, equipment, tools, and any other required resources, including outside resources, such as contractors, OEMs, and vendors, to accomplish the activity.

- Arrow Destination (M): A33333—Perform aircraft test and evaluation

Aircraft to be evaluated: Aircraft (new or used) that join the fleet or aircraft that are checked after flight are evaluated to determine maintenance requirements.

- Arrow Source (O): A2545—Perform postarrival ground operations
- Arrow Destination (I): A3322—Detect aircraft discrepancies

Aircraft training directives: A set of policies, procedures, and instructions that directs aircraft training.

- Arrow Destination (C): A445—Conduct aircraft training

Aircraft training: Continuously updated information regarding the conditions that exist in the aircraft training.

- Arrow Source (O): A445—Conduct aircraft training

Aircraft training resources: The elements necessary for the successful accomplishment of aircraft training. The elements are defined as properly trained and certified personnel, adequate facilities, required information, materials, equipment, tools, and any other required resources, including outside resources, such as contractors, OEMs, and vendors, to accomplish the activity.

- Arrow Destination (M): A445—Conduct aircraft training

Aircraft with clearly identified discrepancies: Aircraft with discrepancies that have been clearly identified.

- Arrow Source (O): A3323—Diagnose aircraft discrepancies
- Arrow Destination (I): A3324—Evaluate aircraft discrepancies

Aircraft with discrepancies: Aircraft with unacceptable discrepancies.

- Arrow Source (O): A3322—Detect aircraft discrepancies
- Arrow Destination (I): A3323—Diagnose aircraft discrepancies

Aircraft with speed less than V1 during takeoff segment: Aircraft moving on the runway for takeoff whose airspeed has not reached V1.

- Arrow Source (O): A25232—Perform takeoff prior to V1
- Arrow Destination (I): A25233—Perform takeoff at/after V1

Aircraft/part information: Data related to aircraft and parts. Regarding the aircraft, the data include:

- Type and configuration
    - Cockpit standardization
    - Cabin configuration
    - Maintenance program bridging
    - Conformance to type design
- Engine deterioration/derivative performance
- Specific fuel consumption
- Center of gravity
- Approved flight manual (AFM) performances
- Approved flight manual (including airworthiness directives)
- Maximum structural limits
- Fuel dumping capacity
- Weights

Regarding the aircraft parts, the data include:

- Identification
- Manufacturer
- Price
- Specifications
- Appropriate records

- Arrow Destination (I): A342—Perform standardization & modification
- Arrow Destination (I): A33342—Perform configuration control
- Arrow Destination (I): A33343—Evaluate/maintain aircraft components
- Arrow Destination (I): A33344—Perform part usage analysis

Airport analysis performance engineering: Performance analysis on airport environment, approaches, and terrain.

- Arrow Source (O): A1532—Identify & implement operations policies & procedures
- Arrow Destination (I): A1533—Develop & evaluate operations policies & procedures

Airport information: Information about the airport, such as:

- Special procedures
- Gate availability
- Security status
- Arrival/departure slots
- Aerodrome obstacle charts
- Load-bearing capacity
- Crash fire rescue capability
- Runway length

- Arrow Destination (I): A1323—Plan flight routes
- Arrow Destination (I): A1522—Collect & process operational data

Airport/weather/topographical information: A collection of data related to airport, weather, and obstacles in terminal and enroute areas that affect aircraft flight operations. The airport information includes:

- Special procedures
- Gate availability
- Security status
- Arrival/departure slots
- Aerodrome obstacle charts
- Load-bearing capacity
- Crash fire rescue capability
- Runway length

The weather data may come from sources such as:

- National Weather Service
- International Weather Services
- Contractor Weather Services
- Other government weather services
- Field conditions
- Supplemental Aviation Weather Reporting Stations (SWARS)
- RADAR
- Pilot reports

The topographical data includes International Civil Aviation Organization (ICAO) takeoff data, and one engine inoperative flight path.

- Arrow Source (I): { Border }

Airport/topographical information: A collection of data related to the airport and obstacles in terminal and enroute areas that affect aircraft flight operations.

The airport information includes:

- Special procedures
- Gate availability
- Security status
- Arrival/departure slots
- Aerodrome obstacle charts
- Load-bearing capacity
- Crash fire rescue capability
- Runway length

The topographical data includes ICAO takeoff data and one-engine inoperative flight path, and others.

- Arrow Destination (I): A1325—Perform load/fuel planning

Airport/weather information: A collection of data related to the airport and weather conditions in terminal and enroute areas that affect aircraft flight operations.

The airport information includes:

- Special procedures
- Gate availability
- Security status
- Arrival/departure slots

- Aerodrome obstacle charts
- Load-bearing capacity
- Crash fire rescue capability
- Runway length

The weather data may come from sources such as:

- National Weather Service
- International Weather Services
- Contractor Weather Services
- Other government weather services
- Field conditions
- SWARS
- RADAR
- Pilot reports

- Arrow Destination (I): A1532—Identify & implement operations policies & procedures

Airports: An area of land or water that is used or intended to be used for aircraft landing and takeoff, including its buildings and facilities, if any (14 CFR Part 1).

- Arrow Source (M): { Border }
- Arrow Destination (M): A2522—Perform predeparture ground operations
- Arrow Destination (M): A2544—Perform landing operations
- Arrow Destination (M): A2545—Perform post-arrival ground operations
- Arrow Destination (M): A25232—Perform takeoff prior to V1
- Arrow Destination (M): A3332—Perform line maintenance

Airworthy aircraft: Aircraft in which the aircraft, airframe, engine, propeller, accessories, and appliances meet their type design and are in a condition for safe operations.

- Arrow Source (O): A323—Perform quality control
- Arrow Destination (I): A564—Distribute resources
- Arrow Source (O): A3322—Detect aircraft discrepancies

Airworthy parts/acceptable tooling/Special tools & test equipment passing inspection: Parts, tooling, or special tools and test equipment that pass the receiving or final inspection available for use.

- Arrow Source (O): A323—Perform quality control
- Arrow Destination (I): A563—Store resources

Allocated certificate holder operation resources: Certificate holder operation resources, including in-house and outside resources, such as contractors, OEMs, and vendors, that have been allocated to sites available for use. The resources include both human resources (such as available maintenance personnel, ground operation personnel, management personnel, and supporting staff) and nonhuman resources (such as parts, materials, equipment, facilities, acceptable tooling, manuals, and calibrated payload scales).

- Arrow Source (O): A564—Distribute resources

Allocated aircraft: Aircraft that is available for operations.

- Arrow Source (O): A564—Distribute resources
- Arrow Destination (I): A244—Replenish fuel
- Arrow Destination (I): A245—Perform line services
- Arrow Destination (I): A246—Perform deicing/anti-icing services
- Arrow Destination (M): A242—Perform ground handling
- Arrow Destination (I): A2434—Load/unload cargo

Allocated aircraft to be maintained: Aircraft that is parked at maintenance site for either line maintenance or heavy/depot maintenance.

- Arrow Source (O): A3324—Evaluate aircraft discrepancies
- Arrow Destination (I): A3332—Perform line maintenance
- Arrow Destination (I): A33332—Perform aircraft repair

Allocated airworthy parts: Airworthy parts that have been allocated to sites available for use.

- Arrow Source (O): A564—Distribute resources
- Arrow Destination (I): A3332—Perform line maintenance
- Arrow Destination (I): A33332—Perform aircraft repair
- Arrow Destination (I): A33343—Evaluate/maintain aircraft components

Allocated expendable supplies: Expendable supplies such as food, fuel, replenishable gases and liquids, and cabin services expendables, moved from other places and used for ground operations.

- Arrow Source (O): A564—Distribute resources
- Arrow Destination (I): A244—Replenish fuel
- Arrow Destination (I): A245—Perform line services

Alternative regulatory compliance data: Supplemental data developed and used by engineers to allow for deviation or relief from regulatory requirements. Examples include:

- Exemption, deviation, and waiver
- Application for STC (Note: if no Designated Alteration Station (DAS) is authorized)
- AMOC

- Arrow Source (M): { Border }
- Arrow Destination (M): A1523—Perform technical evaluation
- Arrow Destination (M): A342—Perform standardization & modification
- Arrow Destination (M): A343—Perform fleet operation support

Analytical results: Information converted from data with the purpose of contributing to knowledge base, i.e., trend analysis, data interpretation, generalization, statistical analysis. This includes analysis based on Flight Operation Quality Assurance (FOQA) and Advanced Qualification Program (AQP) data.

- Arrow Source (O): A162—Collect/analyze safety data
- Arrow Destination (I): A22—Perform quality surveillance of operations
- Arrow Destination (I): A163—Perform investigation
- Arrow Destination (I): A164—Perform internal evaluation
- Arrow Destination (I): A165—Perform safety awareness program
- Arrow Destination (I): A172—Perform recordkeeping & reporting
- Arrow Destination (I): A173—Administer technical publication

Approach descent directives: A set of policies, procedures, and instructions that directs approach descent flight operations of aircraft.

- Arrow Destination (C): A25423—Perform descent and approach operations

Approach descent status: Continuously updated information regarding the conditions that exist in the approach descent operations of aircraft.

- Arrow Source (O): A25423—Perform descent and approach operations

Approach descent resources: The elements necessary for the successful accomplishment of aircraft approach descent flight operations. The elements are defined as properly trained and certified personnel, required information, and material support.

- Arrow Destination (M): A25423—Perform descent and approach operations

Approach directives: A set of policies, procedures, and instructions that directs approach flight operations of aircraft.

- Arrow Destination (C): A2543—Perform approach operations

Approach status: Continuously updated information regarding the conditions that exist in the approach operations.

- Arrow Source (O): A2543—Perform approach operations

Approach resources: The elements necessary for the successful accomplishment of aircraft approach flight operations. The elements are defined as properly trained and certified personnel, required information, and material support.

- Arrow Destination (M): A2543—Perform approach operations

Approved inspection and maintenance application policies & procedures: The policies and procedures that ensure compliance with CFRs and other regulatory authority requirements or internal board review (with approved reliability program).

Note: The approved vendor list is used at A-51 to develop the control to A-54.

- Arrow Source (O): A1524—Apply approved inspection and maintenance program
- Arrow Destination (C): A31—Manage MIE
- Arrow Destination (I): A51—Manage certificate holder operation resource provision

Approved operations policies & procedures: The policies and procedures that ensure compliance with CFRs and other regulatory authority requirements approved/accepted by the FAA. These include:

- FOM
- Training manual
- Aircraft Operating Manual/AFM
- Operation specifications
- Administrative and human resources manuals
- Union agreements

- Arrow Source (O): A1533—Develop & evaluate operations policies & procedures
- Arrow Destination (C): A21—Manage air transportation
- Arrow Destination (C): A31—Manage MIE
- Arrow Destination (C): A51—Manage certificate holder operation resource provision
- Arrow Destination (C): A131—Manage operational control
- Arrow Destination (C): A441—Manage training implementation and record

Arrival directives: A set of policies, procedures, and instructions that directs arrival operations.

- Arrow Destination (C): A2541—Manage arrival operations

Arrival operation execution directives: A set of policies, procedures, and instructions that directs the execution of arrival operations.

- Arrow Source (O): A2541—Manage arrival operations

Arrival operation management resources: The elements necessary for the successful accomplishment of arrival operation management. The elements are defined as properly trained

and certified personnel, adequate facilities, required information, material support, and any other required resources, including outside resources, such as contractors, OEMs, and vendors, to accomplish the activity.

- Arrow Destination (M): A2541—Manage arrival operations

Arrival status: Continuously updated information regarding the conditions that exist in the arrival operations.

- Arrow Source (O): A2541—Manage arrival operations

Arrival resources: The elements necessary for the successful accomplishment of arrival operations. The elements are defined as properly trained and certified personnel, adequate facilities, required information, material support, and any other required resources, including outside resources, such as contractors, OEMs, and vendors, to accomplish the activity.

- Arrow Destination (M): A254—Perform arrival operations

Assigned crewmembers: Crewmember assigned to conduct a certain flight task.

- Arrow Source (O): A555—Release personnel for assignment
- Arrow Destination (I): A2522—Perform predeparture ground operations

Assignment of provider: Appointment to training provider to provide training for the personnel.

- Arrow Source (O): A435—Select training provider
- Arrow Destination (C): A435—Develop training curriculum

ATC facilities: Facilities that provide air traffic control services. These services are provided to promote the safe, orderly, and expeditious flow of air traffic within a national airspace system.

- Arrow Source (M): { Border }
- Arrow Destination (M): A253—Perform cruise operations
- Arrow Destination (M): A2522—Perform predeparture ground operations
- Arrow Destination (M): A2543—Perform approach operations
- Arrow Destination (M): A2544—Perform landing operations
- Arrow Destination (M): A2545—Perform postarrival ground operations
- Arrow Destination (M): A25232—Perform takeoff prior to V1
- Arrow Destination (M): A25233—Perform takeoff at/after V1
- Arrow Destination (M): A25242—Perform initial climb operations
- Arrow Destination (M): A25243—Perform normal climb operations
- Arrow Destination (M): A25422—Perform initial descent operations
- Arrow Destination (M): A25423—Perform descent and approach operations

ATC information: Information about ATC used for operational policy and procedure development.

Arrow Source (I): {Border}
Arrow Destination (I): A1532—Identify & implement operations policies & procedures

ATC instructions/clearances: Directives issued by air traffic control that require a pilot to take specific actions; e.g., "turn left heading two five zero," "go-around," and "clear the runway."

This also includes the authorization for aircraft movement, i.e., route of flight, taxi, takeoff, etc.

- Arrow Source (C): { Border }
- Arrow Destination (C): A253—Perform cruise operations
- Arrow Destination (C): A2522—Perform predeparture ground operations
- Arrow Destination (C): A2543—Perform approach operations
- Arrow Destination (C): A2544—Perform landing operations
- Arrow Destination (C): A2545—Perform postarrival ground operations
- Arrow Destination (C): A25232—Perform takeoff prior to V1
- Arrow Destination (C): A25233—Perform takeoff at/after V1
- Arrow Destination (C): A25242—Perform initial climb operations
- Arrow Destination (C): A25243—Perform normal climb operations
- Arrow Destination (C): A25422—Perform initial descent operations
- Arrow Destination (C): A25423—Perform descent and approach operations

Available personnel: Personnel available to conduct certain tasks of certificate holder operations.

- Arrow Source (O): A555—Release personnel for assignment

Available vendors/contractors/OEMs: Available pool of vendors, contractors, and OEM resources that includes:

- Contractor/OEM personnel
- Borrowed parts
- Borrowed tools
- Information of vendors, contractors, and OEM, i.e., World Aviation Directory

- Arrow Source (I): { Border }
- Arrow Destination (I): A53—Collect resource information
- Arrow Destination (I): A552—Select candidates for job positions
- Arrow Destination (I): A555—Release personnel for assignment
- Arrow Destination (I): A562—Receive resources

Boarding service execution directives: A set of policies, procedures, and instructions that directs the execution of boarding services.

- Arrow Source (O): A2331—Manage boarding services

Boarding service management resources: The elements necessary for the successful accomplishment of boarding service management. The elements are defined as properly trained and certified personnel, adequate facilities, required information, material support, and any other required resources, including outside resources, such as contractors, OEMs, and vendors, to accomplish the activity.

- Arrow Destination (M): A2331—Manage boarding services

Boarding service status: Continuously updated information regarding the conditions that exist in the passenger boarding.

- Arrow Source (O): A2331—Manage boarding services

Boarding service resources: The elements necessary for the successful accomplishment of boarding services. The elements are defined as properly trained and certified personnel, adequate facilities, required information, materials, equipment, tools, and any other required resources, including outside resources, such as contractors, OEMs, and vendors, to accomplish the activity.

- Arrow Destination (M): A233—Perform boarding services

Bulk loaded cargo: Cargo loaded into aircraft without using containers or ULD.

- Arrow Destination (I): A2434—Load/unload cargo

Cabin readiness status: Information on satisfactory completion of cabin preflight duties, such as:

- Emergency equipment is in place and functional.
- Galley and catering supplies are adequate.
- Sufficient potable water is on board.

- Arrow Source (O): A232—Perform preflight cabin duties
- Arrow Destination (C): A2332—Provide check-in services

CAMP: A complex system of individual, interrelated maintenance and inspection tasks that support administrative procedures.

The Continuous Airworthiness Maintenance Program (CAMP) is a compilation of the individual maintenance and inspection functions utilized by an operator to fulfill its total maintenance needs.

Authorization to use CAMP is documented by Operations Specifications - Aircraft Maintenance, approved by the FAA. CAMP also includes other programs required by the regulations, such as:

- Continuing Analysis and Surveillance Programs (CASS)
- Training programs
- Maintenance personnel authorization (such as RII and special authorization for contractors)
- Recordkeeping and reporting systems

The basic elements of CAMP include

- Aircraft inspection
- Scheduled maintenance
- Unscheduled maintenance
- Engine, propeller, and appliance repair and overhaul
- Structural inspection program/airframe overhaul
- Material control, including SUPs
- Addressing short-term escalation
- Maintenance manuals
- Approved vendor list

- Arrow Source (O): A1524—Apply approved inspection and maintenance program
- Arrow Destination (C): A41—Manage personnel training
- Arrow Destination (C): A51—Manage certificate holder operation resource provision
- Arrow Destination (C): A123—Develop maintenance plan
- Arrow Destination (C): A131—Manage operational control
- Arrow Destination (C): A244—Replenish fuel
- Arrow Destination (C): A323—Perform quality control
- Arrow Destination (C): A341—Manage engineering support
- Arrow Destination (C): A3221—Manage QA process
- Arrow Destination (C): A3322—Detect aircraft discrepancies
- Arrow Destination (C): A3323—Diagnose aircraft discrepancies
- Arrow Destination (C): A3331—Manage scheduled/nonscheduled aircraft maintenance

Candidate selection directives: A set of policies, procedures, and instructions that directs the selection of candidates.

- Arrow Destination (C): A552—Select candidates for job positions

Candidate selection status: Continuously updated information regarding the conditions that exist in the candidate selection.

- Arrow Source (O): A552—Select candidates for job positions

Candidate selection resources: The elements necessary for the successful accomplishment of candidate selection. The elements are defined as properly trained and certified personnel, adequate facilities, required information, materials, equipment, tools, and any other required resources, including outside resources, such as contractors, OEMs, and vendors, to accomplish the activity.

- Arrow Destination (M): A552—Select candidates for job positions

Cargo after check/weigh/acceptance: Cargo that has met the safety requirements and is ready for loading and tiedown.

- Arrow Source (O): A2432—Check/weigh/accept cargo

Cargo after preloading: Cargo that has been loaded and secured to pallets/ULDs/containers.

- Arrow Source (O): A2433—Secure cargo
- Arrow Destination (I): A2434—Load/unload cargo

Cargo check/weigh/acceptance status: Continuously updated information regarding the conditions that exist in cargo checking, weighing, and acceptance.

- Arrow Source (O): A2432—Check/weigh/accept cargo

Cargo check/weigh/acceptance resources: The elements necessary for the successful accomplishment of cargo check/weigh/acceptance. The elements are defined as properly trained and certified personnel, adequate facilities, required information, materials, equipment, tools, and any other required resources, including outside resources, such as contractors, OEMs, and vendors, to accomplish the activity.

- Arrow Destination (M): A2432—Check/weigh/accept cargo

Cargo check/weigh/acceptance directives: A set of policies, procedures, and instructions that directs cargo checking, weighing, acceptance, and control of dangerous goods. This includes:

- Dangerous goods, including COMAT
- Compatibility
- Quantity limitations
- Training requirements
- Proper packing and labeling

- Prohibited goods
- Arrow Destination (C): A2432—Check/weigh/accept cargo

Cargo-handling directives: A set of policies, procedures, and instructions that directs cargo handling.

- Arrow Destination (C): A2431—Manage cargo handling

Cargo-handling management resources: The elements necessary for the successful accomplishment of cargo-handling management. The elements are defined as properly trained and certified personnel, adequate facilities, required information, material support, and any other required resources, including outside resources, such as contractors, OEMs, and vendors, to accomplish the activity.

- Arrow Destination (M): A2431—Manage cargo handling

Cargo intended for aircraft: Cargo to be loaded onto aircraft.

- Arrow Source (O): A242—Perform ground handling
- Arrow Destination (I): A2432—Check/weigh/accept cargo

Cargo leaving aircraft: Cargo that has been unloaded from aircraft.

- Arrow Source (O): A2434—Load/unload cargo
- Arrow Destination (I): A242—Perform ground handling

Cargo-loading/unloading resources: The elements necessary for the successful accomplishment of cargo loading/unloading. The elements are defined as properly trained and certified personnel, adequate facilities, required information, materials, equipment, tools, and any other required resources, including outside resources, such as contractors, OEMs, and vendors, to accomplish the activity.

- Arrow Destination (M): A2434—Load/unload cargo

Cargo-loading/unloading directives: A set of policies, procedures, and instructions that directs cargo loading and unloading.

- Arrow Destination (C): A2434—Load/unload cargo

Cargo-loading/unloading status: Continuously updated information regarding the conditions that exist in the cargo loading and unloading.

- Arrow Source (O): A2434—Load/unload cargo

Cargo-securing directives: A set of policies, procedures, and instructions that directs securing cargo.

- Arrow Destination (C): A2433—Secure cargo

Cargo-securing status: Continuously updated information regarding the conditions that exist in securing cargo.

- Arrow Source (O): A2433—Secure cargo

Cargo-securing resources: The elements necessary for the successful accomplishment of cargo securing. The elements are defined as properly trained and certified personnel, adequate facilities, required information, materials, equipment, tools, and any other required resources, including outside resources, such as contractors, OEMs, and vendors, to accomplish the activity.

- Arrow Destination (M): A2433—Secure cargo

Cargo-handling execution directives: A set of policies, procedures, and instructions that directs the execution of cargo handling.

- Arrow Source (O): A2431—Manage cargo handling

Cargo-handling status: Continuously updated information regarding the conditions that exist in the cargo handling.

- Arrow Source (O): A2431—Manage cargo handling

Cargo-handling resources: The elements necessary for the successful accomplishment of cargo handling. The elements are defined as properly trained and certified personnel, adequate facilities, required information, materials, equipment, tools, and any other required resources, including outside resources, such as contractors, OEMs, and vendors, to accomplish the activity.

- Arrow Destination (M): A243—Perform cargo handling

Certificate holder business directives: Policies, procedures, and instructions that certificate holders use for business. The directives are originated from various factors of consideration, such as:

- Operational efficiency
- Economics
- Reliability information
- Marketing and financial information
- Customer services
- Delays
- Environmental impacts
- Cost of living adjustments

- Interchange/code share agreements
- Salary markets
- Route structures-adding or deleting business segments
- Purchasing
- Wet leasing or dry leasing
- Labor relations
- Geographical issues
- Regulatory authority differences
- Airline specifications
- Tax base subsidies
- Modification commission
- Demographics
- Security-domestic and international
- Mergers
- Vendor/contractor/supplier selection

- Arrow Source (C): { Border }
- Arrow Destination (C): A11—Manage certificate holder functions
- Arrow Destination (C): A21—Manage air transportation
- Arrow Destination (C): A31—Manage MIE
- Arrow Destination (C): A41—Manage personnel training
- Arrow Destination (C): A51—Manage certificate holder operation resource provision

Certificate holder management resources: The elements necessary for the successful accomplishment of certificate holder management. The elements are defined as properly trained and certified personnel, adequate facilities, required information, material support, and any other required resources, including outside resources, such as contractors, OEMs, and vendors, to accomplish the activity.

- Arrow Destination (M): A11—Manage certificate holder functions

Certificate holder operation management directives: A set of policies, procedures, and instructions that directs the management of certificate holder operations.

- Arrow Source (O): A11—Manage certificate holder functions

Certificate holder operation management resources: The elements necessary for the successful accomplishment of certificate holder operation management. The elements are defined as properly trained and certified personnel, adequate facilities, required information, material support, and any other required resources, including outside resources, such as contractors, OEMs, and vendors, to accomplish the activity.

- Arrow Destination (M): A1—Manage certificate holder operations

Certificate holder operation status: Continuously updated information regarding the conditions that exist in the certificate holder operations, including:

- Special operations
- Nonroutine maintenance
- Fueling
- Deicing
- Roster RII personnel
- Safety data

  - Observed safety deficiencies during operations, e.g., events requiring immediate notification, such as:

    - Air turnback or gate return
    - Aircraft ground damage
    - OJI (on-the-job injury)

  - Operations briefing, i.e., morning briefing

- Others

- Arrow Destination (I): A14—Project utilization
- Arrow Destination (I): A52—Identify resource needs
- Arrow Destination (I): A121—Coordinate plan development
- Arrow Destination (I): A134—Perform maintenance control
- Arrow Destination (I): A162—Collect/analyze safety data
- Arrow Destination (I): A172—Perform recordkeeping & reporting
- Arrow Destination (I): A1323—Plan flight routes
- Arrow Destination (I): A1327—Assign crewmember(s)
- Arrow Destination (I): A1331—Manage aircraft dispatch
- Arrow Destination (I): A1522—Collect & process operational data
- Arrow Destination (I): A1532—Identify & implement operations policies & procedures
- Arrow Destination (I): A3225—Perform QA administrative function

Certificate holder operation records: Documents recording historical performance of certificate holder operations.

- Arrow Destination (I): A11—Manage certificate holder functions
- Arrow Destination (I): A14—Project utilization
- Arrow Destination (I): A121—Coordinate plan development
- Arrow Destination (I): A172—Perform recordkeeping & reporting
- Arrow Destination (I): A1323—Plan flight routes
- Arrow Destination (I): A1325—Perform load/fuel planning
- Arrow Destination (I): A1327—Assign crewmember(s)

- Arrow Destination (I): A1522—Collect & process operational data
- Arrow Destination (I): A1532—Identify & implement operations policies & procedures

Certificate holder resource provision: Continuously updated information regarding the conditions that exist in the certificate holder operation resource provision.

- Arrow Source (O): A51—Manage certificate holder operation resource provision

Certificate holder operation resources: The elements available for the successful accomplishment of certificate holder operations. The elements are defined as properly trained and certificated personnel, adequate facilities, required information, materials, equipment, tools, and any other required resources, including outside resources, such as contractors, OEMs, and vendors, to accomplish the activity.

- Arrow Source (M): { Border }

Certificate holder operation resources provision execution directives: A set of policies, procedures, and instructions that directs the execution of certificate holder operation resource provision.

Note: The directives are in compliance with regulations and company policies.

- Arrow Source (O): A51—Manage certificate holder operation resource provision

Certificate holder operation resources provision management resources: The elements available for the successful accomplishment of certificate holder operation resources provision management. The elements are defined as properly trained and certified personnel, adequate facilities, required information, materials, equipment, tools, and any other required resources, including outside resources, such as contractors, OEMs, and vendors, to accomplish the activity.

- Arrow Destination (M): A51—Manage certificate holder operation resource provision

Certificate holder policies & procedures development resources: The elements available for the successful accomplishment of certificate holder policies & procedures development. The elements are defined as properly trained and certified personnel, adequate facilities, required information, materials, equipment, tools, and any other required resources, including outside resources, such as contractors, OEMs, and vendors, to accomplish the activity.

- Arrow Destination (M): A15—Develop certificate holder policies & procedures

Certificate holder policy & procedure development coordination resources: The elements necessary for the successful accomplishment of certificate holder policy & procedure development coordination. The elements are defined as properly trained and certified personnel, adequate

facilities, required information, material support, and any other required resources, including outside resources, such as contractors, OEMs, and vendors, to accomplish the activity.

- Arrow Destination (M): A151—Coordinate certificate holder policy & procedure development

Certificate holder policy & procedure development directives: A set of policies, procedures, and instructions that directs the certificate holder policy & procedure development.

- Arrow Destination (C): A151—Coordinate certificate holder policy & procedure development

Certificate holder policy & procedure development execution directives: A set of policies, procedures, and instructions that directs the execution of certificate holder policy & procedure development.

- Arrow Source (O): A151—Coordinate certificate holder policy & procedure development

Certificate holder policy & procedure development status: Continuously updated information regarding the conditions that exist in the certificate holder policy & procedure development.

- Arrow Source (O): A151—Coordinate certificate holder policy & procedure development

Certificate holder resource information: Information regarding certificate holder potential and existing resources, including both human resources and operational resources such as parts (identification, manufacturer, price, specifications, and appropriate records), materials, equipment, facilities, fuel (grade, quality, availability, audits, and cost), automation, and aircraft. Aircraft information includes:

- Type and configuration
    - Cockpit standardization
    - Cabin configuration
    - Maintenance program bridging
    - Conformance to type design
    - Others
- Engine deterioration/derivative performance
- Specific fuel consumption
- Center of gravity
- AFM performances
- AFM (including Airworthiness Directives)
- Maximum structural limits
- Fuel dumping capacity
- Weights

- Arrow Source (O): A51—Manage certificate holder operation resource provision
- Arrow Destination (I): A172—Perform recordkeeping & reporting
- Arrow Destination (I): A1323—Plan flight routes
- Arrow Destination (I): A1325—Perform load/fuel planning
- Arrow Destination (I): A1326—Assign aircraft
- Arrow Destination (I): A1522—Collect & process operational data
- Arrow Destination (I): A1532—Identify & implement operations policies & procedures

Check-in service directives: A set of policies, procedures, and instructions that directs passenger check-in services.

- Arrow Destination (C): A2332—Provide check-in services

Check-in service status: Continuously updated information regarding the conditions that exist in the check-in services.

- Arrow Source (O): A2332—Provide check-in services

Check-in service resources: The elements necessary for the successful accomplishment of check-in services. The elements are defined as properly trained and certified personnel, adequate facilities, required information, materials, equipment, tools, and any other required resources, including outside resources, such as contractors, OEMs, and vendors, to accomplish the activity.

- Arrow Destination (M): A2332—Provide check-in services

Class training directives: A set of policies, procedures, and instructions that directs class training.

- Arrow Destination (C): A442—Conduct instructor-led training

Class training status: Continuously updated information regarding the conditions that exist in the class training.

- Arrow Source (O): A442—Conduct instructor-led training

Class training resources: The elements necessary for the successful accomplishment of class training. The elements are defined as properly trained and certified personnel, adequate facilities, required information, materials, equipment, tools, and any other required resources, including outside resources, such as contractors, OEMs, and vendors, to accomplish the activity.

- Arrow Destination (M): A442—Conduct instructor-led training

Clearly identified discrepancies: Failures with aircraft being clearly identified.

- Arrow Source (O): A3323—Diagnose aircraft discrepancies
- Arrow Destination (I): A3324—Evaluate aircraft discrepancies

- Arrow Destination (I): A33332—Perform aircraft repair

Climb directives: A set of policies, procedures, and instructions that directs aircraft climb operations.

- Arrow Destination (C): A25241—Manage climb operations

Climb management resources: The elements necessary for the successful accomplishment of aircraft climb flight management. The elements are defined as properly trained and certified personnel, required information, material support, and any other required resources.

- Arrow Destination (M): A25241—Manage climb operations

Climb operation execution directives: A set of policies, procedures, and instructions that directs the execution of aircraft climb operations.

- Arrow Source (O): A25241—Manage climb operations

Climb status: Continuously updated information regarding the conditions that exist in the aircraft climb operations.

- Arrow Source (O): A25241—Manage climb operations

Climb resources: The elements necessary for the successful accomplishment of aircraft climb operations. The elements are defined as properly trained and certified personnel, required information, and material support.

- Arrow Destination (M): A2524—Perform climb operations

Communication & reporting: Documents and dialogue generated during certificate holder operations, used for communicating with external organizations, such as the FAA, OEM, contractors, and industry personnel.

This includes communications between carriers, including:

- Voluntary disclosure program
- AMOC

- Arrow Source (O): A172—Perform recordkeeping & reporting
- Arrow Destination (O): { Border }

Component evaluation/maintenance directives: A set of policies, procedures, and instructions that directs component evaluation and maintenance.

- Arrow Destination (C): A33343—Evaluate/maintain aircraft components

Component evaluation/maintenance status: Continuously updated information regarding the conditions that exist in the component evaluation and maintenance.

- Arrow Source (O): A33343—Evaluate/maintain aircraft components

Component evaluation/maintenance resources: The elements necessary for the successful accomplishment of component evaluation and maintenance. The elements are defined as properly trained and certified personnel, adequate facilities, required information, materials, equipment, tools, and any other required resources, including outside resources, such as contractors, OEMs, and vendors, to accomplish the activity.

- Arrow Destination (M): A33343—Evaluate/maintain aircraft components

Component maintenance directives: A set of policies, procedures, and instructions that directs aircraft component maintenance.

- Arrow Destination (C): A33341—Manage component maintenance

Component maintenance execution directives: A set of policies, procedures, and instructions that directs the execution of component maintenance.

- Arrow Source (O): A33341—Manage component maintenance

Component maintenance management resources: The elements necessary for the successful accomplishment of aircraft component maintenance. The elements are defined as properly trained and certified personnel, adequate facilities, required information, material support, and any other required resources, including outside resources, such as contractors, OEMs, and vendors, to accomplish the activity.

- Arrow Destination (M): A33341—Manage component maintenance

Component maintenance status: Continuously updated information regarding the conditions that exist in the aircraft component maintenance.

- Arrow Source (O): A33341—Manage component maintenance

Component maintenance resources: The elements necessary for the successful accomplishment of aircraft component maintenance. The elements are defined as properly trained and certified personnel, adequate facilities, required information, materials, equipment, tools, and any other required resources, including outside resources, such as contractors, OEMs, and vendors, to accomplish the activity.

- Arrow Destination (M): A3334—Perform component maintenance

Component usage analysis directives: A set of policies, procedures, and instructions that directs aircraft part usage analysis.

- Arrow Destination (C): A33344—Perform part usage analysis

Component usage analysis resources: The elements necessary for the successful accomplishment of component usage analysis. The elements are defined as properly trained and certified personnel, adequate facilities, required information, materials, equipment, tools, and any other required resources, including outside resources, such as contractors, OEMs, and vendors, to accomplish the activity.

- Arrow Destination (M): A33344—Perform part usage analysis

Configuration control directives: A set of policies, procedures, and instructions that directs configuration control.

- Arrow Destination (C): A33342—Perform configuration control

Configuration control status: Continuously updated information regarding the conditions that exist in the configuration control.

- Arrow Source (O): A33342—Perform configuration control

Configuration control resources: The elements necessary for the successful accomplishment of configuration control. The elements are defined as properly trained and certified personnel, adequate facilities, required information, materials, equipment, tools, and any other required resources, including outside resources, such as contractors, OEMs, and vendors, to accomplish the activity.

- Arrow Destination (M): A33342—Perform configuration control

Containerized cargo: Cargo requiring preload on pallets, ULD, or containers.

- Arrow Destination (I): A2433—Secure cargo

Contracted resources: Resources provided on a contractual basis that are temporarily or permanently available for use by the company. This includes supporting in-sourced contracts. Under this condition, the resource is supporting the in-sourced company's model (external entities), e.g., loaned resources, personnel resources, military leave, etc.

- Arrow Source (O): A555—Release personnel for assignment
- Arrow Destination (O): { Border }
- Arrow Source (O): A564—Distribute resources

Crewmember assignment: Selection of personnel to conduct certain tasks with consideration given to the crew's position, qualifications, crew pairing, flight, duty, and rest requirements.

- Arrow Source (O): A1327—Assign crewmember(s)

Crewmember assignment directives: A set of policies, procedures, and instructions that directs crewmember assignment.

- Arrow Destination (C): A1327—Assign crewmember(s)

Crewmember assignment status: Continuously updated information regarding the conditions that exist in the crewmember assignments.

- Arrow Source (O): A1327—Assign crewmember(s)

Crewmember assignment resources: The elements necessary for the successful accomplishment of crewmember assignments. The elements are defined as properly trained and certified personnel, adequate facilities, required information, materials, equipment, tools, and any other required resources, including outside resources, such as contractors, OEMs, and vendors, to accomplish the activity.

- Arrow Destination (M): A1327—Assign crewmember(s)

Crewmember duty status: Status regarding crewmember flight and duty time.

- Arrow Source (O): A1334—Monitor flight
- Arrow Destination (I): A1327—Assign crewmember(s)

Crewmembers to be assigned: Crewmembers who will be assigned to new flight tasks.

- Arrow Source (O): A2545—Perform post-arrival ground operations
- Arrow Destination (I): A553—Review currency status
- Arrow Destination (I): A554—Review flight/duty time status

Cruise directives: A set of policies, procedures, and instructions that directs aircraft cruise flight operations.

- Arrow Destination (C): A253—Perform cruise operations

Cruise status: Continuously updated information regarding the conditions that exist in the aircraft cruise flight operations.

- Arrow Source (O): A253—Perform cruise operations

Cruise resources: The elements necessary for the successful accomplishment of aircraft cruise flight operations. The elements are defined as properly trained and certified personnel, required information, and material support.

- Arrow Destination (M): A253—Perform cruise operations

Currency status review directives: A set of policies, procedures, and instructions that directs personnel status review.

- Arrow Destination (C): A553—Review currency status

Currency status review status: Continuously updated information regarding the conditions that exist in currency status review.

- Arrow Source (O): A553—Review currency status

Currency status review resources: The elements necessary for the successful accomplishment of currency status review. The elements are defined as properly trained and certified personnel, adequate facilities, required information, materials, equipment, tools, and any other required resources, including outside resources, such as contractors, OEMs, and vendors, to accomplish the activity.

- Arrow Destination (M): A553—Review currency status

Data for internal analysis: Raw data or refined information necessary for initial or further analysis.

- Arrow Source (O): A172—Perform recordkeeping & reporting
- Arrow Destination (I): A14—Project utilization
- Arrow Destination (I): A122—Develop flight operations plan
- Arrow Destination (I): A123—Develop maintenance plan
- Arrow Destination (I): A124—Develop training plan
- Arrow Destination (I): A125—Develop resource provision plan
- Arrow Destination (I): A154—Develop training policies & procedures
- Arrow Destination (I): A155—Develop administrative policies & procedures
- Arrow Destination (I): A162—Collect/analyze safety data
- Arrow Destination (I): A1322—Evaluate weather
- Arrow Destination (I): A1323—Plan flight routes
- Arrow Destination (I): A1324—Accept payload
- Arrow Destination (I): A1325—Perform load/fuel planning
- Arrow Destination (I): A1326—Assign aircraft
- Arrow Destination (I): A1327—Assign crewmember(s)
- Arrow Destination (I): A1522—Collect & process operational data
- Arrow Destination (I): A1532—Identify & implement operations policies & procedures

Data for storage: Data sent to a repository for storage.

- Arrow Source (O): A162—Collect/analyze safety data
- Arrow Destination (I): A172—Perform recordkeeping & reporting

Deicing/anti-icing service status: Continuously updated information regarding the conditions that exist in the performing deicing/anti-icing services.

- Arrow Source (O): A246—Perform deicing/anti-icing services

Deicing/anti-icing service resources: The elements necessary for the successful accomplishment of deicing/anti-icing services. The elements are defined as properly trained and certified personnel, adequate facilities, required information, materials, equipment, tools, and any other required resources, including outside resources, such as contractors, OEMs, and vendors, to accomplish the activity.

- Arrow Destination (M): A246—Perform deicing/anti-icing services

Deicing/anti-icing directives: A set of policies, procedures, and instructions that directs aircraft deicing/anti-icing, i.e., temperature holdover time, mixtures, and application.

- Arrow Destination (C): A246—Perform deicing/anti-icing services

Departure directives: A set of policies, procedures, and instructions that directs departure operations.

- Arrow Destination (C): A2521—Manage departure operations

Departure operation execution directives: A set of policies, procedures, and instructions that directs the execution of departure operations.

- Arrow Source (O): A2521—Manage departure operations

Departure operation management resources: The elements necessary for the successful accomplishment of departure operation management. The elements are defined as properly trained and certified personnel, adequate facilities, required information, materials, equipment, tools, and any other required resources, including outside resources, such as contractors, OEMs, and vendors, to accomplish the activity.

- Arrow Destination (M): A2521—Manage departure operations

Departure status: Continuously updated information regarding the conditions that exist in the departure operations.

- Arrow Source (O): A2521—Manage departure operations

Departure resources: The elements necessary for the successful accomplishment of departure operations. The elements are defined as properly trained and certified personnel, adequate facilities, required information, materials, equipment, tools, and any other required resources, including outside resources, such as contractors, OEMs, and vendors, to accomplish the activity.

- Arrow Destination (M): A252—Perform departure operations

Deplaning service directives: A set of policies, procedures, and instructions that directs passenger deplaning services.

- Arrow Destination (C): A235—Perform deplaning services

Deplaning service status: Continuously updated information regarding the conditions that exist in the passenger deplaning services.

- Arrow Source (O): A235—Perform deplaning services

Deplaning service resources: The elements necessary for the successful accomplishment of deplaning services. The elements are defined as properly trained and certified personnel, adequate facilities, required information, materials, equipment, tools, and any other required resources, including outside resources, such as contractors, OEMs, and vendors, to accomplish the activity.

- Arrow Destination (M): A235—Perform deplaning services

Descent directives: A set of policies, procedures, and instructions that directs aircraft descent flight operations.

- Arrow Destination (C): A25421—Manage descent operations

Descent management resources: The elements necessary for the successful accomplishment of aircraft descent flight management. The elements are defined as properly trained and certified personnel, required information, material support, and any other required resources.

- Arrow Destination (M): A25421—Manage descent operations

Descent operation execution directives: A set of policies, procedures, and instructions that directs the execution of aircraft descent flight operations.

- Arrow Source (O): A25421—Manage descent operations

Descent status: Continuously updated information regarding the conditions that exist in the aircraft descent flight operations.

- Arrow Source (O): A25421—Manage descent operations

Descent resources: The elements necessary for the successful accomplishment of aircraft descent flight operations. The elements are defined as properly trained and certified personnel, adequate facilities, required information, and material support.

- Arrow Destination (M): A2542—Perform descent operations

Personnel training evaluation directives: A set of policies, procedures, and instructions that directs personnel training evaluation.

- Arrow Destination (C): A453—Conduct personnel evaluation

Personnel training evaluation status: Continuously updated information regarding the conditions that exist in the personnel training evaluation.

- Arrow Source (O): A453—Conduct personnel evaluation

Personnel training evaluation resources: The elements necessary for the successful accomplishment of personnel training evaluation. The elements are defined as properly trained and certified personnel, adequate facilities, required information, materials, equipment, tools, and any other required resources, including outside resources, such as contractors, OEMs, and vendors, to accomplish the activity.

- Arrow Destination (M): A453—Conduct personnel evaluation

Device/simulator training directives: A set of policies, procedures, and instructions that directs device or simulator training.

- Arrow Destination (C): A444—Conduct device/simulator training

Device/simulator training status: Continuously updated information regarding the conditions that exist in the device or simulator training.

- Arrow Source (O): A444—Conduct device/simulator training

Device/simulator training resources: The elements necessary for the successful accomplishment of device/simulator training. The elements are defined as properly trained and certified personnel, adequate facilities, required information, materials, equipment, tools, and any other required resources, including outside resources, such as contractors, OEMs, and vendors, to accomplish the activity.

- Arrow Destination (M): A444—Conduct device/simulator training

Discrepancies identified during IEP: Discrepancies identified by conducting an IEP, if applicable.

- Arrow Source (O): A164—Perform internal evaluation

Disposal of unwanted materials: Disposal of unwanted materials based on criteria, such as:

- Salvageable parts or tooling that are excess inventory
- Parts that are beyond economical repair
- Destruction of parts reaching their life limits
- Parts reaching their shelf-life limits
- Rogue components or parts with unacceptable reliability
- Parts rejected as SUPs

- Arrow Source (O): A562—Receive resources
- Arrow Destination (O): { Border }

Distributed materials not requiring QC receiving inspection: Distributed materials not requiring QC receiving inspection for direct distribution, including:

- Paper products

    - Towels
    - Air sick bags
    - Toilet paper

- Office supplies
- Commissary
- Passenger convenience items

- Arrow Source (O): A562—Receive resources
- Arrow Destination (I): A564—Distribute resources

Engineering data: Technical data related to engineering used for aircraft maintenance that requires feedback to engineering, including:

Repair data

- Alterations
- AD compliance

    - Repair assessment program
    - Corrosion prevention control program
    - Aging aircraft programs

- Owner-produced parts
- Aircraft configuration

Safety data

- Emergency data
- Accident/incident data

Reliability data, if a reliability program is approved

- Warranty
- Fleet campaign
- CASS

- Arrow Source (O): A342—Perform standardization & modification
- Arrow Destination (I): A3332—Perform line maintenance
- Arrow Destination (I): A33332—Perform aircraft repair
- Arrow Destination (I): A33343—Evaluate/maintain aircraft components
- Arrow Destination (I): A33344—Perform part usage analysis

Engineering instructions: Instructions or guidelines related to engineering to direct aircraft maintenance such as:

- Engineering documentation

    - AD/SB (Airworthiness Directives/Service Bulletins)
    - Repair/alterations
    - Component build specifications
    - Purchase specifications (interchangeability/part numbers)

- Manual and task cards
- Special flight operations
- Maintenance planning
- Adding existing aircraft type/new aircraft type to fleet
- AMOC
- Exemption deviations and waivers
- Reliability data
- Warranty recommendations
- Emergency accident/incident data
- Equivalents (tools/equipment/materials)
- Owner-produced parts
- Process specifications

- Arrow Source (O): A341—Manage engineering support
- Arrow Destination (C): A51—Manage certificate holder operation resource provision
- Arrow Destination (I): A123—Develop maintenance plan
- Arrow Destination (C): A321—Manage quality surveillance
- Arrow Destination (C): A331—Manage aircraft maintenance

Engineering support directives: A set of policies, procedures, and instructions that directs engineering support.

- Arrow Destination (C): A341—Manage engineering support

Engineering support execution directives: A set of policies, procedures, and instructions that directs the execution of engineering support.

- Arrow Source (O): A341—Manage engineering support

Engineering support management resources: The elements necessary for the successful accomplishment of engineering support management. The elements are defined as properly trained and certified personnel, adequate facilities, required information, materials, equipment, tools, and any other required resources, including outside resources, such as contractors, OEMs, and vendors, to accomplish the activity.

- Arrow Destination (M): A341—Manage engineering support

Engineering support status: Continuously updated information regarding the conditions that exist in the engineering support, including:

- FAA-required documents
- STC application
- Coordination with FAA
- Equivalency of tools, test equipment, and materials
- AFM supplements

- Arrow Source (O): A341—Manage engineering support

Engineering support resources: The elements necessary for the successful accomplishment of engineering support. The elements are defined as properly trained and certified personnel, adequate facilities, required information, materials, equipment, tools, and any other required resources, including outside resources, such as contractors, OEMs, and vendors, to accomplish the activity.

- Arrow Destination (M): A34—Perform engineering support

Fleet operation support directives: A set of policies, procedures, and instructions that directs fleet operation support.

- Arrow Destination (C): A343—Perform fleet operation support

Fleet operation support status: Continuously updated information regarding the conditions that exist in the fleet operation support.

- Arrow Source (O): A343—Perform fleet operation support

Fleet operation support resources: The elements necessary for the successful accomplishment of fleet operation support. The elements are defined as properly trained and certified personnel, adequate facilities, required information, materials, equipment, tools, and any other required resources, including outside resources, such as contractors, OEMs, and vendors, to accomplish the activity.

- Arrow Destination (M): A343—Perform fleet operation support

Flight locating procedure initiation directives: A set of policies, procedures, and instructions that directs flight locating procedure initiation.

- Arrow Destination (C): A1333—Initiate flight locating procedure

Flight locating procedure initiation status: Continuously updated information regarding the conditions that exist in the flight locating procedure initiation.

- Arrow Source (O): A1333— Initiate flight locating procedure

Flight locating procedure initiating resources: The elements necessary for the successful accomplishment of flight locating procedure initiation. The elements are defined as properly trained and certified personnel, adequate facilities, required information, and material support.

- Arrow Destination (M): A1333— Initiate flight locating procedure

Flight execution information: Information that is used for executing a specific flight. In such cases, this may result in a signed document that both the aircraft dispatcher and the PIC (pilot-in-command) sign before flight, which, at a minimum, would be a creation of a flight plan. The dispatcher's and PIC's signatures certify that, in the judgment of each, the flight can be made safely as planned.

Note: This also includes any updated information provided to crew during any phase of flight, including:

- Weather information
- Airport information

- Arrow Source (O): A1333—Initiate flight locating procedure
- Arrow Destination (I): A172—Perform recordkeeping & reporting
- Arrow Destination (C): A1334—Monitor flight
- Arrow Destination (I): A234—Perform in-flight services
- Arrow Destination (I): A235—Perform deplaning services
- Arrow Destination (I): A242—Perform ground handling
- Arrow Destination (I): A244—Replenish fuel
- Arrow Destination (I): A245—Perform line services
- Arrow Destination (I): A253—Perform cruise operations

- Arrow Destination (I): A2332—Provide check-in services
- Arrow Destination (I): A2432—Check/weigh/accept cargo
- Arrow Destination (I): A2433—Secure cargo
- Arrow Destination (I): A2434—Load/unload cargo
- Arrow Destination (I): A2522—Perform predeparture ground operations
- Arrow Destination (I): A2543—Perform approach operations
- Arrow Destination (I): A2544—Perform landing operations
- Arrow Destination (I): A2545—Perform postarrival ground operations
- Arrow Destination (I): A25232—Perform takeoff prior to V1
- Arrow Destination (I): A25233—Perform takeoff at/after V1
- Arrow Destination (I): A25242—Perform initial climb operations
- Arrow Destination (I): A25243—Perform normal climb operations
- Arrow Destination (I): A25422—Perform initial descent operations
- Arrow Destination (I): A25423—Perform descent and approach operations
- Arrow Destination (I): A551—Manage human resource provision
- Arrow Destination (I): A561—Manage material resource handling

Flight monitoring directives: A set of policies, procedures, and instructions that directs monitoring of flight.

- Arrow Destination (C): A1334—Monitor flight

Flight monitoring status: Continuously updated information regarding the conditions that exist during the aircraft flight.

- Arrow Source (O): A1334—Monitor flight

Flight monitoring resources: The elements necessary for the successful accomplishment of flight monitoring. The elements are defined as properly trained and certified personnel, adequate facilities, required information, materials, equipment, tools, and any other required resources, including outside resources, such as contractors, OEMs, and vendors, to accomplish the activity.

- Arrow Destination (M): A1334—Monitor flight

Flight operations planning directives: A set of policies, procedures, and instructions that directs the flight operations planning.

- Arrow Destination (C): A122—Develop flight operations plan

Flight operations planning status: Continuously updated information regarding the conditions that exist in the flight operations planning.

- Arrow Source (O): A122—Develop flight operations plan

Flight operations planning resources: The elements necessary for the successful accomplishment of flight operations planning. The elements are defined as properly trained and certified personnel, adequate facilities, required information, materials, equipment, tools, and any other required resources, including outside resources, such as contractors, OEMs, and vendors, to accomplish the activity.

- Arrow Destination (M): A122—Develop flight operations plan

Flight requirements: Aircraft routing (information provided by dispatcher) that may require revision based on the following requirements:

- Emergency situations
- Special flight operations
- MEL/CDL situations
- Fueling
- Deicing
- Special routing requirements

- Arrow Source (O): A1331—Manage aircraft dispatch
- Arrow Destination (I): A134—Perform maintenance control

Flight route planning directives: A set of policies, procedures, and instructions that directs the planning of the flight route.

- Arrow Destination (C): A1323—Plan flight routes

Flight route planning status: Continuously updated information regarding the conditions that exist in the planning of the flight route.

- Arrow Source (O): A1323—Plan flight routes

Flight route planning resources: The elements necessary for the successful accomplishment of flight route planning. The elements are defined as properly trained and certified personnel, adequate facilities, required information, materials, equipment, tools, and any other required resources, including outside resources, such as contractors, OEMs, and vendors, to accomplish the activity.

- Arrow Destination (M): A1323—Plan flight routes

Flight routes: Route information, such as enroute, altitude, and alternative route, for aircraft to follow during the flight.

- Arrow Source (O): A1323—Plan flight routes
- Arrow Destination (I): A1325—Perform load/fuel planning

Flight operations: Requests to fulfill customer requirements and the planning associated with those requirements.

- Arrow Source (O): A122—Develop flight operations plan
- Arrow Destination (I): A123—Develop maintenance plan
- Arrow Destination (I): A1323—Plan flight routes
- Arrow Destination (I): A1325—Perform load/fuel planning
- Arrow Destination (I): A1326—Assign aircraft
- Arrow Destination (I): A1327—Assign crewmember(s)

Flight segment planning directives: A set of policies, procedures, and instructions that directs flight segment planning.

- Arrow Destination (C): A1321—Manage flight segments planning

Flight segment planning management resources: The elements necessary for the successful accomplishment of flight segment planning management. The elements are defined as properly trained and certified personnel, adequate facilities, required information, materials, equipment, tools, and any other required resources, including outside resources, such as contractors, OEMs, and vendors, to accomplish the activity.

- Arrow Destination (M): A1321—Manage flight segments planning

Flight segment planning status: Continuously updated information regarding the conditions that exist in the flight segment planning.

- Arrow Source (O): A1321—Manage flight segments planning

Flight segment planning resources: The elements necessary for the successful accomplishment of flight segment planning. The elements are defined as properly trained and certified personnel, adequate facilities, required information, materials, equipment, tools, and any other required resources, including outside resources, such as contractors, OEMs, and vendors, to accomplish the activity.

- Arrow Destination (M): A132—Plan flight segments

Flight/duty time review status: Continuously updated information regarding the conditions that exist in the flight/duty time review.

- Arrow Source (O): A554—Review flight/duty time status

Flight/duty time review resources: The elements necessary for the successful accomplishment of flight/duty time review. The elements are defined as properly trained and certified personnel,

adequate facilities, required information, materials, equipment, tools, and any other required resources, including outside resources, such as contractors, OEMs, and vendors, to accomplish the activity.

- Arrow Destination (M): A554—Review flight/duty time status

Flight/duty time status review directives: A set of policies, procedures, and instructions that directs flight/duty time status review.

- Arrow Destination (C): A554—Review flight/duty time status

FOQA: Flight Operations Quality Assurance (FOQA) is data retrieved from digital flight recorders or flight data acquisition units, either via quick access recorders or remote download devices.

Note: Not all certificate holders participate in a FOQA program.

- Arrow Source (O): A3332—Perform line maintenance
- Arrow Destination (I): A162—Collect/analyze safety data

Fuel replenishment directives: A set of policies, procedures, and instructions that directs the replenishment of fuel.

- Arrow Destination (C): A244—Replenish fuel

Fuel replenishment status: Continuously updated information regarding the conditions that exist in the fuel replenishment.

- Arrow Source (O): A244—Replenish fuel

Fuel replenishment resources: The elements necessary for the successful accomplishment of fuel replenishment. The elements are defined as properly trained and certified personnel, adequate facilities, required information, materials, equipment, tools, and any other required resources, including outside resources, such as contractors, OEMs, and vendors, to accomplish the activity.

- Arrow Destination (M): A244—Replenish fuel

GMM: The General Maintenance Manual (GMM), or equivalent reference material, contains the policies and procedures of the certificate holder dealing with organizational matters, the policies of the maintenance section, and procedures for the administration of the continuous airworthiness program, test flight requirements, and any other subjects that are peculiar to each individual operator. This includes policy guidance for:

- RII
- Material receiving inspection
- Approved vendors

- Outsource quality processes
- Calibrated tooling

This also includes the identification of training requirements for maintenance.

- Arrow Source (O): A1524—Apply approved inspection and maintenance program
- Arrow Destination (I): A173—Administer technical publication
- Arrow Destination (C): A241—Manage ground operations
- Arrow Destination (C): A323—Perform quality control
- Arrow Destination (C): A341—Manage engineering support
- Arrow Destination (C): A3221—Manage QA process
- Arrow Destination (C): A3322—Detect aircraft discrepancies
- Arrow Destination (C): A3323—Diagnose aircraft discrepancies
- Arrow Destination (C): A33332—Perform aircraft repair
- Arrow Destination (C): A33333—Perform aircraft test and evaluation

GOM: The General Operation Manual (GOM), or equivalent reference material, contains the policies and operational segment of the certificate holders manual dealing with organizational matters, the policies of the operational section, the administration of the flight, dispatch, ground operation trainings, personnel scheduling, flight safety, and any other subjects that are peculiar to each individual operator such as:

- Personnel selection criteria
- Operation specification changes
- Organization changes

This also includes the identification of training requirements for operations.

- Arrow Source (O): A1533—Develop & evaluate operations policies & procedures
- Arrow Destination (C): A22—Perform quality surveillance of operations
- Arrow Destination (I): A173—Administer technical publication
- Arrow Destination (C): A253—Perform cruise operations
- Arrow Destination (C): A2522—Perform predeparture ground operations
- Arrow Destination (C): A2543—Perform approach operations
- Arrow Destination (C): A2544—Perform landing operations
- Arrow Destination (C): A2545—Perform postarrival ground operations
- Arrow Destination (C): A25232—Perform takeoff prior to V1
- Arrow Destination (C): A25233—Perform takeoff at/after V1
- Arrow Destination (C): A25242—Perform initial climb operations
- Arrow Destination (C): A25243—Perform normal climb operations
- Arrow Destination (C): A25422—Perform initial descent operations
- Arrow Destination (C): A25423—Perform descent and approach operations

Government regulations/oversight: A set of documents from applicable governments to regulate certificate holder operations, including the activities by the applicable governments to ensure

compliance with the requirements of those documents and the operator's manual. The operator's program should be adjusted as required. This includes master minimum equipment list (MMEL).

- Arrow Source (C): { Border }
- Arrow Destination (C): A11—Manage certificate holder functions
- Arrow Destination (C): A154—Develop training policies & procedures
- Arrow Destination (C): A155—Develop administrative policies & procedures
- Arrow Destination (C): A171—Coordinate information management
- Arrow Destination (C): A1521—Manage maintenance policy & procedure development
- Arrow Destination (C): A1531—Manage operations policy & procedure development

Ground-handling resources: The elements necessary for the successful accomplishment of ground handling. The elements are defined as properly trained and certified personnel, adequate facilities, required information, materials, equipment, tools, and any other required resources, including outside resources, such as contractors, OEMs, and vendors, to accomplish the activity.

- Arrow Destination (M): A242—Perform ground handling

Ground operation directives: A set of policies, procedures, and instructions that directs ground operations.

- Arrow Destination (C): A241—Manage ground operations

Ground operation execution directives: A set of policies, procedures, and instructions that directs the execution of ground operations.

- Arrow Source (O): A241—Manage ground operations

Ground operation management resources: The elements necessary for the successful accomplishment of ground operation management. The elements are defined as properly trained and certified personnel, adequate facilities, required information, material support, and any other required resources, including outside resources, such as contractors, OEMs, and vendors, to accomplish the activity.

- Arrow Destination (M): A241—Manage ground operations

Ground operation status: Continuously updated information regarding the conditions that exist in ground operations.

- Arrow Source (O): A241—Manage ground operations

Ground operation resources: The elements necessary for the successful accomplishment of ground operations. The elements are defined as properly trained and certified personnel, adequate

facilities, required information, materials, equipment, tools, and any other required resources, including outside resources, such as contractors, OEMs, and vendors, to accomplish the activity.

- Arrow Destination (M): A24—Perform ground operations

Ground-transportation status: Continuously updated information regarding the conditions that exist in ground transportation.

- Arrow Source (O): A242—Perform ground handling

Ground-handling directives: A set of policies, procedures, and instructions that directs ground handling.

- Arrow Destination (C): A242—Perform ground handling

Heavy maintenance directives: A set of policies, procedures, and instructions that directs heavy maintenance.

- Arrow Destination (C): A33331—Manage heavy maintenance

Heavy maintenance execution directives: A set of policies, procedures, and instructions that directs the execution of heavy/depot maintenance.

- Arrow Source (O): A33331—Manage heavy maintenance

Heavy maintenance management resources: The elements necessary for the successful accomplishment of heavy maintenance management. The elements are defined as properly trained and certified personnel, adequate facilities, required information, material support, and any other required resources, including outside resources, such as contractors, OEMs, and vendors, to accomplish the activity.

- Arrow Destination (M): A33331—Manage heavy maintenance

Heavy maintenance status: Continuously updated information regarding the conditions that exist in the heavy maintenance.

- Arrow Source (O): A33331—Manage heavy maintenance

Heavy maintenance resources: The elements necessary for the successful accomplishment of heavy maintenance. The elements are defined as properly trained and certified personnel, adequate facilities, required information, materials, equipment, tools, and any other required resources, including outside resources, such as contractors, OEMs, and vendors, to accomplish the activity.

- Arrow Destination (M): A3333—Perform heavy maintenance

Human resource provision directives: A set of policies, procedures, and instructions that directs available human resource provision. The directives are originated from various consideration factors, such as:

- Environment, health, and safety
- Family Assistance Act—victim assistance
- Drug and Alcohol FAA-Approved Program
- P.R.I.A.—Pilots Records Improvement Act
- E.A.P.—Employee Assistance Program
- Exempt/Non-Exempt salary
- Substance Abuse Programs
- Dangerous goods
- Management infrastructure
- Security background check
- Job description and responsibility
- Retention incentives, such as promotion, and raises
- Compensation, such as leave, overtime
- Arrow Destination (C): A551—Manage human resource provision

Human resource provision execution directives: A set of policies, procedures, and instructions that directs the execution of human resource provision.

- Arrow Source (O): A551—Manage human resource provision

Human resource provision management resources: The elements necessary for the successful accomplishment of human resource provision management. The elements are defined as properly trained and certified personnel, adequate facilities, required information, material support, and any other required resources to accomplish the activity.

- Arrow Destination (M): A551—Manage human resource provision

Human resource provision status: Continuously updated information regarding the conditions that exist in supplying available personnel.

- Arrow Source (O): A551—Manage human resource provision

Human resources provision resources: The elements necessary for the successful accomplishment of human resource provision. The elements are defined as properly trained and certified personnel, adequate facilities, required information, materials, equipment, tools, and any other required resources to accomplish the activity.

- Arrow Destination (M): A55—Provide human resources

Identified mechanical deficiencies: Mechanical deficiencies identified through mechanical performance monitoring, including emergency response, day-to-day monitoring, and short- and long-term monitoring.

- Arrow Source (O): A32223—Identify mechanical deficiencies
- Arrow Destination (I): A3224—Analyze quality data & develop responses

Identified program deficiencies: Deficiencies in the maintenance program identified through a QA audit.

- Arrow Source (O): A3223—Perform maintenance program audit/investigation
- Arrow Destination (I): A3224—Analyze quality data & develop responses

Incoming resource information: Information regarding incoming resources, including both human resources and operational resources, such as parts (identification, manufacturer, price, specifications, and appropriate records), materials, equipment, facilities, fuel (grade, quality, availability, audits, and cost), automation, and aircraft. The aircraft information includes:

- Type and configuration

    - Cockpit standardization
    - Cabin configuration
    - Maintenance program bridging
    - Conformance to type design
    - Others

- Engine deterioration/derivative performance
- Specific fuel consumption
- Center of gravity
- AFM performances
- AFM (including ADs)
- Maximum structural limits
- Fuel dumping capacity
- Weights

- Arrow Source (I): { Border }
- Arrow Destination (I): A53—Collect resource information

Incoming resources: Resources coming from outside—imported to the certificate holder to support the certificate holder operations. The resources include both human resources (new hires and contracted personnel) and operational resources such as parts, aircraft, tools (including special tools), equipment (including test equipment), facilities, material, fuel, administrative, commercial supplies, consumables, and deicing.

- Arrow Source (I): { Border }

- Arrow Destination (I): A562—Receive resources

In-flight services directives: A set of policies, procedures, and instructions that directs in-flight services.

- Arrow Destination (C): A234—Perform in-flight services

In-flight services status: Continuously updated information regarding the conditions that exist in the in-flight services.

- Arrow Source (O): A234—Perform in-flight services

In-flight services resources: The elements necessary for the successful accomplishment of in-flight services. The elements are defined as properly trained and certified personnel, adequate facilities, required information, materials, equipment, tools, and any other required resources, including outside resources, such as contractors, OEMs, and vendors, to accomplish the activity.

- Arrow Destination (M): A234—Perform in-flight services

Information after aircraft ground services: Information regarding status of aircraft after ground services, such as ground handling, cargo handling, fuel replenishment, line services, deicing/anti-icing services.

- Arrow Source (O): A242—Perform ground handling
- Arrow Destination (I): A134—Perform maintenance control
- Arrow Source (O): A244—Replenish fuel
- Arrow Destination (I): A1325—Perform load/fuel planning
- Arrow Source (O): A245—Perform line services
- Arrow Destination (I): A1332—Produce preflight package
- Arrow Source (O): A246—Perform deicing/anti-icing services
- Arrow Destination (I): A1334—Monitor flight
- Arrow Source (O): A2431—Manage cargo handling

Information management coordination resources: The elements necessary for the successful accomplishment of information management coordination. The elements are defined as properly trained and certified personnel, adequate facilities, required information, materials, equipment, tools, and any other required resources, including outside resources, such as contractors, OEMs, and vendors, to accomplish the activity.

- Arrow Destination (M): A171—Coordinate information management

Information management directives: A set of policies, procedures, and instructions that directs information management.

- Arrow Destination (C): A171—Coordinate information management

Information management execution directives: A set of policies, procedures, and instructions that directs the execution of information management.

- Arrow Source (O): A171—Coordinate information management

Information management status: Continuously updated information regarding the conditions that exist in the information management.

- Arrow Source (O): A171—Coordinate information management

Information management resources: The elements necessary for the successful accomplishment of information management. The elements are defined as properly trained and certified personnel, adequate facilities, required information, material support, and any other required resources, including outside resources, such as contractors, OEMs, and vendors, to accomplish the activity.

- Arrow Destination (M): A17—Perform information management

Initial climb directives: A set of policies, procedures, and instructions that directs aircraft initial climb flight operations.

- Arrow Destination (C): A25242—Perform initial climb operations

Initial climb status: Continuously updated information regarding the conditions that exist in the aircraft initial climb flight operations.

- Arrow Source (O): A25242—Perform initial climb operations

Initial climb resources: The elements necessary for the successful accomplishment of aircraft climb flight operations. The elements are defined as properly trained and certified personnel, required information, and material support.

- Arrow Destination (M): A25242—Perform initial climb operations

Initial descent directives: A set of policies, procedures, and instructions that directs aircraft initial descent flight operations.

- Arrow Destination (C): A25422—Perform initial descent operations

Initial descent status: Continuously updated information regarding the conditions that exist in the aircraft initial descent flight operations.

- Arrow Source (O): A25422—Perform initial descent operations

Initial descent resources: The elements necessary for the successful accomplishment of aircraft initial descent flight. The elements are defined as properly trained and certified personnel, required information, and material support.

- Arrow Destination (M): A25422—Perform initial descent operations

Internal evaluation directives: A set of policies, procedures, and instructions that directs the internal evaluation.

- Arrow Destination (C): A164—Perform internal evaluation

Internal evaluation status: Continuously updated information regarding the conditions that exist in the internal evaluation.

- Arrow Source (O): A164—Perform internal evaluation
- Arrow Destination (I): A161—Manage safety program administration

Internal evaluation resources: The elements necessary for the successful accomplishment of internal evaluation. The elements are defined as properly trained and certified personnel, adequate facilities, required information, materials, equipment, tools, and any other required resources, including outside resources, such as contractors, OEMs, and vendors, to accomplish the activity.

- Arrow Destination (M): A164—Perform internal evaluation

Internal feedback on technical/operational contents: The suggestion for improvement of policies and procedures based on:

- Employee suggestions
- Safety recommendations
- Voluntary disclosure
- Others regarding matters such as work cards and other technical references

- Arrow Source (O): A11—Manage certificate holder functions
- Arrow Destination (I): A1523—Perform technical evaluation
- Arrow Destination (I): A1533—Develop & evaluate operations policies & procedures

Internally generated safety/compliance data: Safety data, incident data, occurrence data, or reports of unsafe condition including:

- Aviation Safety Report
- Aircraft ground damage data
- Occurrence/IEP reports
- ASAP (Aviation Safety Action Program)

- Investigation results

  - Process owner
  - Safety analysis

- OJI/Occupational Safety Health Administration (OSHA) reports
- Internal evaluation
- Contractor oversight
- Partner evaluation, i.e., Code share
- Enforcement action (Letter of Inquiry (LOI), voluntary disclosures)
- Incident reports
- Internally generated hotline complaints
- Safety reports
- Safety committee recommendations

- Arrow Destination (I): A134—Perform maintenance control
- Arrow Destination (I): A162—Collect/analyze safety data
- Arrow Destination (I): A172—Perform recordkeeping & reporting
- Arrow Destination (I): A1522—Collect & process operational data
- Arrow Destination (I): A1532—Identify & implement operations policies & procedures

Investigation directives: A set of policies, procedures, and instructions that directs the investigation.

- Arrow Destination (C): A163—Perform investigation

Investigation status: Continuously updated information regarding the conditions that exist in the investigation.

- Arrow Source (O): A163—Perform investigation

Investigation resources: The elements necessary for the successful accomplishment of investigation. The elements are defined as properly trained and certified personnel, adequate facilities, required information, materials, equipment, tools, and any other required resources, including outside resources, such as contractors, OEMs, and vendors, to accomplish the activity.

- Arrow Destination (M): A163—Perform investigation

Job task description: A description of the job task, including its contents, requirements, and goals.

- Arrow Source (O): A41—Manage personnel training
- Arrow Destination (I): A42—Identify & analyze training requirements

Labor-hour requirements: Time needed to conduct certain tasks.

- Arrow Source (O): A3324—Evaluate aircraft discrepancies
- Arrow Destination (C): A3331—Manage scheduled/nonscheduled aircraft maintenance

Landing directives: A set of policies, procedures, and instructions that directs aircraft landing operations.

- Arrow Destination (C): A2544—Perform landing operations

Landing status: Continuously updated information regarding the conditions that exist in the aircraft landing operations.

- Arrow Source (O): A2544—Perform landing operations

Landing resources: The elements necessary for the successful accomplishment of aircraft landing. The elements are defined as properly trained and certified personnel, required information, and material support.

- Arrow Destination (M): A2544—Perform landing operations

Legal: A framework to regulate the organization's activities to ensure their compliance with the law. This includes:

- Workman's Compensation Liability
- Americans with Disabilities Act

- Arrow Source (C): { Border }
- Arrow Destination (C): A11—Manage certificate holder functions
- Arrow Destination (C): A51—Manage certificate holder operation resource provision

Line maintenance directives: A set of policies, procedures, and instructions that directs line maintenance. This includes the directives regarding gases and fluids.

- Arrow Destination (C): A3332—Perform line maintenance

Line maintenance status: Continuously updated information regarding the conditions that exist in line maintenance.

- Arrow Source (O): A3332—Perform line maintenance

Line maintenance resources: The elements necessary for the successful accomplishment of line maintenance. The elements are defined as properly trained and certified personnel, adequate

facilities, required information, materials, equipment, tools, and any other required resources, including outside resources, such as contractors, OEMs, and vendors, to accomplish the activity.

- Arrow Destination (M): A3332—Perform line maintenance

Line service directives: A set of policies, procedures, and instructions that directs line services.

- Arrow Destination (C): A245—Perform line services

Line service status: Continuously updated information regarding the conditions that exist in line services.

- Arrow Source (O): A245—Perform line services

Line service resources: The elements necessary for the successful accomplishment of line services. The elements are defined as properly trained and certified personnel, adequate facilities, required information, materials, equipment, tools, and any other required resources, including outside resources, such as contractors, OEMs, and vendors, to accomplish the activity.

- Arrow Destination (M): A245—Perform line services

Load/fuel plan: Calculated information on payload and fuel configuration.

- Arrow Source (O): A1325—Perform load/fuel planning

Load/fuel planning directives: A set of policies, procedures, and instructions that directs load/fuel planning. Those instructions have been originated from various consideration factors, such as:

- Available flight level
- Overflight restrictions
- AFM performances (includes airworthiness directives)
- Maintenance fuel savings practices
- Special Flight Management System/Flight Management Computer procedures
- Charter versus regular flights

- Arrow Destination (C): A1325—Perform load/fuel planning

Load/fuel planning status: Continuously updated information regarding the conditions that exist in the load/fuel planning.

- Arrow Source (O): A1325—Perform load/fuel planning

Load/fuel planning resources: The elements necessary for the successful accomplishment of load/fuel planning. The elements are defined as properly trained and certified personnel, adequate

facilities, required information, materials, equipment, tools, and any other required resources, including outside resources, such as contractors, OEMs, and vendors, to accomplish the activity.

- Arrow Destination (M): A1325—Perform load/fuel planning

Maintenance & engineering needs: The requirements to keep certificate holder's equipment in condition to provide safe and salable air transportation. Safe, in this sense, implies full compliance with the carrier's own operating specifications and with all applicable directives and regulations of the FAA. Salable means fast and dependable service in modern equipment with comfortable furnishings and decor, without which the company would be unable to compete successfully.

- Arrow Source (O): A1523—Perform technical evaluation
- Arrow Destination (I): A1532—Identify & implement operations policies & procedures

Maintenance control authorization: Maintenance control, if applicable, authorizes the aircraft for services, i.e.,

- ETOPs
- Ferry flight
- RVSM
- RNP (reduced navigation performance)
- CAT II and III
- Nonrevenue flight
- MEL/CDL relief
- Special operations
- Carry-over maintenance
- Special routing request for maintenance
- Maintenance status

    - Fueling requirements
    - Deicing requirements
    - Training and qualification for subcontracted maintenance
    - Temporary RII approval

- Arrow Source (O): A134—Perform maintenance control
- Arrow Destination (I): A1333—Initiate flight locating procedure

Maintenance control directives: A set of policies, procedures, and instructions that directs maintenance control, including all requirements of CAMP.

- Arrow Destination (C): A134—Perform maintenance control

Maintenance control status: Continuously updated information regarding the conditions that exist in this function. This includes:

- Providing information regarding maintenance requirements to maintenance planners
- Providing information regarding maintenance requirements to routing planners

- Arrow Source (O): A134—Perform maintenance control

Maintenance control resources: The elements necessary for the successful accomplishment of maintenance control. The elements are defined as properly trained and certified personnel, adequate facilities, required information, materials, equipment, tools, and any other required resources, including outside resources, such as contractors, OEMs, and vendors, to accomplish the activity.

- Arrow Destination (M): A134—Perform maintenance control

Maintenance decision: Decision on when, where, and how to maintain and repair certain aircraft.

- Arrow Destination (C): A3321—Manage aircraft evaluation

Maintenance management plan: Predetermined information, (i.e., maintenance program) on how to manage aircraft maintenance. This includes the use of short-term escalation, MEL extension, request to add vendors, and other special maintenance instructions.

- Arrow Source (O): A123—Develop maintenance plan
- Arrow Destination (I): A1326—Assign aircraft
- Arrow Destination (I): A1524—Apply approved inspection and maintenance program
- Arrow Destination (I): A331—Manage aircraft maintenance
- Arrow Destination (I): A3225—Perform QA administrative function

Maintenance orders: Order of maintenance requested by maintenance control to meet the flight operation requirements in some circumstances, such as

- Special flight operations
- Nonroutine maintenance
- Customer requests
- Roster RII
- Deferred Maintenance Items
- Fueling
- Deicing
- Emergency situation
- Parts requests
- Lost aircraft certificate

- Arrow Source (O): A134—Perform maintenance control
- Arrow Destination (I): A1325—Perform load/fuel planning
- Arrow Destination (I): A244—Replenish fuel
- Arrow Destination (I): A246—Perform deicing/anti-icing services
- Arrow Destination (I): A331—Manage aircraft maintenance

Maintenance planning directives: A set of policies, procedures, and instructions that directs the maintenance management planning

- Arrow Destination (C): A123—Develop maintenance plan

Maintenance planning status: Continuously updated information regarding the conditions that exist in the maintenance plan development, such as:

- Request for short-term escalation

- Notification of changing maintenance plan based on materials, personnel, facilities, unexpected events, limitation, or short falls

- Adjustments to aircraft routing (linking particular aircraft tail number(s) to particular flight segment(s)) based on maintenance program requirements

- Arrow Source (O): A123—Develop maintenance plan

Maintenance planning resources: The elements necessary for the successful accomplishment of maintenance planning. The elements are defined as properly trained and certified personnel, adequate facilities, required information, materials, equipment, tools, and any other required resources, including outside resources, such as contractors, OEMs, and vendors, to accomplish the activity.

- Arrow Destination (M): A123—Develop maintenance plan

Maintenance policy & procedure development directives: A set of policies, procedures, and instructions that directs maintenance policy & procedure development.

- Arrow Destination (C): A1521—Manage maintenance policy & procedure development

Maintenance policy & procedure development execution directives: A set of policies, procedures, and instructions that directs the execution of policy and procedure development.

- Arrow Source (O): A1521—Manage maintenance policy & procedure development

Maintenance policy & procedure development management resources: The elements necessary for the successful accomplishment of maintenance policy and procedure development

management. The elements are defined as properly trained and certified personnel, adequate facilities, required information, material support, and any other required resources, including outside resources, such as contractors, OEMs, and vendors.

- Arrow Destination (M): A1521—Manage maintenance policy & procedure development

Maintenance policy & procedure development status: Continuously updated information regarding the conditions that exist in the maintenance policy and procedure development.

- Arrow Source (O): A1521—Manage maintenance policy & procedure development

Maintenance policy & procedure development resources: The elements necessary for the successful accomplishment of maintenance policy and procedure development. The elements are defined as properly trained and certified personnel, adequate facilities, required information, materials, equipment, tools, and any other required resources, including outside resources, such as contractors, OEMs, and vendors, to accomplish the activity.

- Arrow Destination (M): A152—Develop maintenance policies & procedures

Maintenance program audit/investigation directives: A set of policies, procedures, and instructions that directs maintenance program audit and investigation.

- Arrow Destination (C): A3223—Perform maintenance program audit/investigation

Maintenance program audit/investigation status: Continuously updated information regarding the conditions that exist in the maintenance program audit and investigation.

- Arrow Source (O): A3223—Perform maintenance program audit/investigation

Maintenance program audit/investigation resources: The elements necessary for the successful accomplishment of maintenance program audit and investigation. The elements are defined as properly trained and certified personnel, adequate facilities, required information, materials, equipment, tools, and any other required resources, including outside resources, such as contractors, OEMs, and vendors, to accomplish the activity.

- Arrow Destination (M): A3223—Perform maintenance program audit/investigation

Maintenance program change approval: The authorization of maintenance program changes.

- Arrow Destination (C): A1524—Apply approved inspection and maintenance program

Approved inspection and maintenance program application directives: A policy that controls the development of a maintenance program.

- Arrow Destination (C): A1524—Apply approved inspection and maintenance program

Approved inspection and maintenance program application resources: The elements necessary for the successful accomplishment of a maintenance program development. The elements are defined as properly trained and certified personnel, adequate facilities, required information, material support, and any required resources, including outside resources, such as contractors, OEMs, and vendors.

- Arrow Destination (M): A1524—Apply approved inspection and maintenance program

Maintenance status: Continuously updated information regarding the conditions that exist in this function. This includes:

- Nonroutine maintenance
- Emergency situation
- MEL/CDL
- Parts requests
- Lost aircraft certificate

- Arrow Source (O): A331—Manage aircraft maintenance

Maintenance routing: A decision on where to maintain the aircraft.

- Arrow Source (O): A3324—Evaluate aircraft discrepancies
- Arrow Destination (C): A3331—Manage scheduled/nonscheduled aircraft maintenance

Manual system: A document system that provides instructions and information necessary to allow the appropriate personnel to perform their duties and responsibilities with a high degree of safety.

A document system includes items such as the GOM, GMM, and MEL/CDL.

- Arrow Source (O): A173—Administer technical publication
- Arrow Destination (C): A41—Manage personnel training
- Arrow Destination (C): A42—Identify & analyze training requirements
- Arrow Destination (C): A431—Manage training design & development
- Arrow Destination (C): A441—Manage training implementation and record
- Arrow Destination (I): A563—Store resources

Materials removed from inventory: Materials that are suspected during inventory and are removed for further inspection or treatment.

- Arrow Source (O): A564—Distribute resources
- Arrow Destination (I): A562—Receive resources

Mechanical deficiency identification directives: A set of policies, procedures, and instructions that directs the mechanical deficiency identification.

- Arrow Destination (C): A32223—Identify mechanical deficiencies

Mechanical deficiency identification status: Continuously updated information regarding the conditions that exist in the mechanical deficiency identification.

- Arrow Source (O): A32223—Identify mechanical deficiencies

Mechanical deficiency identification resources: The elements necessary for the successful accomplishment of mechanical deficiency identification. The elements are defined as properly trained and certified personnel, adequate facilities, required information, materials, equipment, tools, and any other required resources, including outside resources, such as contractors, OEMs, and vendors, to accomplish the activity.

- Arrow Destination (M): A32223—Identify mechanical deficiencies

Mechanical performance fact sheet: Notes, charts, reports, or other appropriate means of reporting and accounting operational data that reveal the existing mechanical performance or trend-related information to facilitate the identification of mechanical deficiencies.

- Arrow Source (O): A1522—Collect & analyze operational data
- Arrow Destination (I): A32223—Identify mechanical deficiencies

Mechanical performance monitoring directives: A set of policies, procedures, and instructions that directs aircraft mechanical performance monitoring.

- Arrow Destination (C): A32221—Manage mechanical performance monitoring

Mechanical performance monitoring execution directives: A set of policies, procedures, and instructions that directs the execution of mechanical performance monitoring.

- Arrow Source (O): A32221—Manage mechanical performance monitoring

Mechanical performance monitoring management resources: The elements necessary for the successful accomplishment of mechanical performance monitoring management. The elements are defined as properly trained and certified personnel, adequate facilities, required information, material support, and any other required resources, including outside resources, such as contractors, OEMs, and vendors, to accomplish the activity.

- Arrow Destination (M): A32221—Manage mechanical performance monitoring

Mechanical performance monitoring status: Continuously updated information regarding the conditions that exist in the mechanical performance monitoring.

- Arrow Source (O): A32221—Manage mechanical performance monitoring

Mechanical performance monitoring resources: The elements necessary for the successful accomplishment of mechanical performance monitoring. The elements are defined as properly trained and certified personnel, adequate facilities, required information, materials, equipment, tools, and any other required resources, including outside resources, such as contractors, OEMs, and vendors, to accomplish the activity.

- Arrow Destination (M): A3222—Monitor mechanical performance

MEL/CDL: Operator-produced MEL or CDL manual based on MMEL, OEM data, and operational requirements. This may only apply to 14 CFR Part 135 operations with ten or more passengers.

- Arrow Source (O): A1533—Develop & evaluate operations policies & procedures
- Arrow Destination (I): A173—Administer technical publication
- Arrow Destination (C): A1523—Perform technical evaluation

Methods for correction of deficiencies: Policies and/or procedures generated from quality assurance audit used for correcting deficiencies in the maintenance and inspection programs.

- Arrow Source (O): A3224—Analyze quality data & develop responses
- Arrow Destination (C): A331—Manage aircraft maintenance
- Arrow Destination (C): A341—Manage engineering support
- Arrow Destination (I): A1524—Apply approved inspection and maintenance program

MIE directives: A set of policies, procedures, and instructions that directs aircraft maintenance, inspection, and engineering.

- Arrow Source (O): A31—Manage MIE

MIE management resources: The elements necessary for the successful accomplishment of maintenance, inspection, and engineering management. The elements are defined as properly trained and certified personnel, adequate facilities, required information, material support, and any other required resources, including outside resources, such as contractors, OEMs, and vendors, to accomplish the activity.

- Arrow Destination (M): A31—Manage MIE

MIE status: Continuously updated information regarding the conditions that exist in the aircraft maintenance, inspection, and engineering.

- Arrow Source (O): A31—Manage MIE

MIE records: Information recorded from instrument or written by persons that describes the status, results, costs, profits, conformance to requirements, etc., of aircraft maintenance, inspection, and engineering.

- Arrow Source (O): A31—Manage MIE

MIE resources (insource & outsource): The elements necessary for the successful accomplishment of aircraft maintenance, inspection, and engineering. The elements are defined as properly trained and certified personnel, adequate facilities, required information, materials, equipment, tools, and any other required resources, including outside resources, such as contractors, OEMs, and vendors, to accomplish the activity.

- Arrow Destination (M): A3—Perform maintenance, inspection & engineering

New hires: New personnel hired by the certificate holder.

- Arrow Destination (I): A552—Select candidates for job positions

Nonconcurrence of release: A requirement for amending the original flight plan.

- Arrow Source (O): A1333—Initiate flight locating procedure
- Arrow Destination (I): A1332—Produce preflight package

Normal climb directives: A set of policies, procedures, and instructions that directs the aircraft normal climb flight operations.

- Arrow Destination (C): A25243—Perform normal climb operations

Normal climb status: Continuously updated information regarding the conditions that exist in an aircraft's normal climb flight operations.

- Arrow Source (O): A25243—Perform normal climb operations

Normal climb resources: The elements necessary for the successful accomplishment of normal climb flight operations. The elements are defined as properly trained and certified personnel, required information, and material support.

- Arrow Destination (M): A25243—Perform normal climb operations

OEM guidance: The OEM guidance is the information provided by the OEM.

- Arrow Destination (I): A42—Identify & analyze training requirements
- Arrow Destination (I): A1522—Collect & process operational data
- Arrow Destination (I): A1532—Identify & implement operations policies & procedures

Operation planning status: Continuously updated information regarding the conditions that exist in the planning operations.

- Arrow Source (O): A121—Coordinate plan development
- Arrow Destination (I): A122—Develop flight operations plan
- Arrow Destination (I): A123—Develop maintenance plan
- Arrow Destination (I): A124—Develop training plan
- Arrow Destination (I): A125—Develop resource provision plan

Operation planning directives: A set of policies, procedures, and instructions that directs operation planning.

- Arrow Destination (C): A121—Coordinate plan development

Operation planning execution directives: A set of policies, procedures, and instructions that directs the execution of operation planning.

- Arrow Source (O): A121—Coordinate plan development

Operation planning resources: The elements necessary for the successful accomplishment of operation planning. The elements are defined as properly trained and certified personnel, adequate facilities, required information, materials, equipment, tools, and any other required resources, including outside resources, such as contractors, OEMs, and vendors, to accomplish the activity.

- Arrow Destination (M): A125—Develop resource provision plan

Operation quality surveillance directives: A set of policies, procedures, and instructions that directs the quality surveillance of operations.

- Arrow Destination (C): A22—Perform quality surveillance of operations

Operation quality surveillance status: Continuously updated information regarding the conditions that exist in the operation quality surveillance.

- Arrow Source (O): A22—Perform quality surveillance of operations

Operation quality surveillance resources: The elements necessary for the successful accomplishment of operation quality surveillance. The elements are defined as properly trained and certified personnel, adequate facilities, required information, materials, equipment, tools, and any other required resources, including outside resources, such as contractors, OEMs, and vendors, to accomplish the activity.

- Arrow Destination (M): A22—Perform quality surveillance of operations

Operational control directives: A set of policies, procedures, and instructions that directs operational control, including security and dangerous goods.

- Arrow Destination (C): A131—Manage operational control

Operational control execution directives: A set of policies, procedures, and instructions that directs the execution of operational control.

- Arrow Source (O): A131—Manage operational control
- Arrow Source (O): A1321—Manage flight segments planning

Operational control management resources: The elements necessary for the successful accomplishment of operational control management. The elements are defined as properly trained and certified personnel, adequate facilities, required information, material support, and any other required resources, including outside resources, such as contractors, OEMs, and vendors.

- Arrow Destination (M): A131—Manage operational control

Operational control status: Continuously updated information regarding the conditions that exist in the operational control.

- Arrow Source (O): A131—Manage operational control

Operational control resources: The elements necessary for the successful accomplishment of operational control resources. The elements are defined as properly trained and certified personnel, adequate facilities, required information, materials, equipment, tools, and any other required resources, including outside resources, such as contractors, OEMs, and vendors, to accomplish the activity.

- Arrow Destination (M): A13—Perform operational control

Operational data: The information related to the performance of operations, such as data necessary for analysis and regulatory reporting purposes, reliability data, and nonregulatory process deficiencies. This also includes historical records of operational data, i.e., fuel burn and usage information, load plan (i.e., weight and balance information), and distribution.

This includes events of system deficiencies, in addition to discrepancies identified by the QA, e.g., internally, externally (FAA findings), and incidents.

- Arrow Source (O): A21—Manage air transportation
- Arrow Destination (I): A3223—Perform maintenance program audit/investigation
- Arrow Destination (I): A3225—Perform QA administrative function
- Arrow Destination (I): A1522—Collect & process operational data

Operational data collection & process status: Continuously updated information regarding the conditions that exist in the operational data collection and process.

- Arrow Source (O): A1522—Collect & process operational data

Operational data collection & process resources: The elements necessary for the successful accomplishment of operational data collection and analysis. The elements are defined as properly trained and certified personnel, adequate facilities, required information, materials, equipment, tools, and any other required resources, including outside resources, such as contractors, OEMs, and vendors, to accomplish the activity.

- Arrow Destination (M): A1522—Collect & process operational data

Operational data collection and analysis directives: A set of policies, procedures, and instructions that directs the operational data collection and process.

- Arrow Destination (C): A1522—Collect & process operational data

Operational data collection directives: Policy that dictates which data to collect.

- Arrow Destination (C): A1522—Collect & process operational data

Operational data collection resources: The elements necessary for the successful accomplishment of operational data collection. The elements are defined as properly trained and certified personnel, adequate facilities, required information, material support, and any required resources, including outside resources, such as contractors, OEMs, and vendors.

- Arrow Destination (M): A1522—Collect & process operational data

Operational needs: Requirements for improving operations, including personnel training, maintenance and operational program changes, maintenance and operational requirements, and other related programs.

- Arrow Source (O): A1532—Identify & implement operations policies & procedures
- Arrow Destination (I): A1522—Collect & process operational data
- Arrow Destination (I): A1533—Develop & evaluate operations policies & procedures

Operations audit reports: Notification of a functional deficiency generated by QA audit such as:

- Fuel usage audit results, i.e., the remaining fuel after flight
- Security audit results
- Performance engineering data audit results
- MEL/CDL adherence deficiency results
- Training device or simulator maintenance audit results
- Accident or incident response audit results
- Outsourced training audit results

- Arrow Source (O): A22—Perform quality surveillance of operations
- Arrow Destination (I): A11—Manage certificate holder functions

Operations policy & procedure development execution directives: A set of policies, procedures, and instructions that directs the operations policy & procedure development.

- Arrow Destination (C): A1531—Manage operations policy & procedure development

Operations policy & procedure identification and implementation directives: A set of policies, procedures, and instructions that directs the execution of operation policy and procedure identification and implementation.

- Arrow Source (O): A1531—Manage operations policy & procedure development

Operations policy & procedure identification guidelines: The directives used to develop operational policy and procedures.

- Arrow Destination (C): A1533—Develop & evaluate operations policies & procedures

Operations policy & procedure development management resources: The elements necessary for the successful accomplishment of operational policy and procedure development management. The elements are defined as properly trained and certified personnel, adequate facilities, required information, material support, and any other required resources, including outside resources, such as contractors, OEMs, and vendors, to accomplish the activity.

- Arrow Destination (M): A1531—Manage operations policy & procedure development

Operations policy & procedure development status: Continuously updated information regarding the conditions that exist in the operation policy and procedure development.

- Arrow Source (O): A1531—Manage operations policy & procedure development
- Arrow Source (O): A1533—Develop & evaluate operations policies & procedures

Operations policy & procedure development resources: The elements necessary for the successful accomplishment of operational policy and procedure development. The elements are defined as properly trained and certified personnel, adequate facilities, required information, material support, and any other required resources, including outside resources, such as contractors, OEMs, and vendors, to accomplish the activity.

- Arrow Destination (M): A1533—Develop & evaluate operations policies & procedures

Operations policy & procedure identification and implementation directives: A set of policies, procedures, and instructions that directs operations policy & procedure identification.

- Arrow Destination (C): A1532—Identify & implement operations policies & procedures

Operations policy & procedure identification and implementation status: Continuously updated information regarding the conditions that exist in the operation policy and procedure identification.

- Arrow Source (O): A1532—Identify & implement operations policies & procedures

Operations policy & procedure identification and implementation resources: The elements necessary for the successful accomplishment of operational policy & procedure identification. The elements are defined as properly trained and certified personnel, adequate facilities, required information, materials, equipment, tools, and any other required resources, including outside resources, such as contractors, OEMs, and vendors, to accomplish the activity.

- Arrow Destination (M): A1532—Identify & implement operations policies & procedures

Operations quality surveillance approval: The technical approval of code share from operations quality surveillance.

- Arrow Source (O): A22—Perform quality surveillance of operations
- Arrow Destination (I): A21—Manage air transportation

Part configuration: Specifications and strategies for selecting and handling parts to be installed on the aircraft.

- Arrow Source (O): A33342—Perform configuration control
- Arrow Destination (C): A33343—Evaluate/maintain aircraft components

Part failure data: Data related to malfunctioned parts such as removal data, no fault found, confirmed failure, and failure model.

- Arrow Source (O): A33343—Evaluate/maintain aircraft components
- Arrow Destination (I): A33344—Perform part usage analysis

Part usage analysis status: Continuously updated information regarding the conditions that exist in the part usage analysis.

- Arrow Source (O): A33344—Perform part usage analysis

Parts requirements: Requests for aircraft parts during aircraft maintenance.

- Arrow Source (O): A33331—Manage heavy maintenance
- Arrow Destination (I): A33341—Manage component maintenance

Parts/special tools and test equipment for receiving/final inspection: Parts that are new or repaired, arriving from vendors or from internal shops for receiving and final inspection prior to distribution for use. The inspection includes checking the physical condition of the parts and reviewing associated documents to ensure that they are properly maintained and approved.

This also includes special tools and test equipment that require receiving inspection.

- Arrow Source (O): A562—Receive resources
- Arrow Destination (I): A323—Perform quality control

Parts/tooling fabricated/repaired: Parts and tools that are fabricated, repaired, or calibrated by certificate holder or contracted vendors, if approved.

- Arrow Source (O): A33343—Evaluate/maintain aircraft components
- Arrow Destination (I): A562—Receive resources

Passenger service directives: A set of policies, procedures, and instructions that directs passenger services.

- Arrow Destination (C): A231—Manage passenger services
- Arrow Destination (C): A2331—Manage boarding services

Passenger service execution directives: A set of policies, procedures, and instructions that directs the execution of passenger services.

- Arrow Source (O): A231—Manage passenger services

Passenger service management resources: The elements necessary for the successful accomplishment of passenger service management. The elements are defined as properly trained and certified personnel, adequate facilities, required information, material support, and any other required resources, including outside resources, such as contractors, OEMs, and vendors, to accomplish the activity.

- Arrow Destination (M): A231—Manage passenger services

Passenger service status: Continuously updated information regarding the conditions that exist in the passenger services.

- Arrow Source (O): A231—Manage passenger services

Passenger service resources: The elements necessary for the successful accomplishment of passenger services. The elements are defined as properly trained and certified personnel, adequate facilities, required information, materials, equipment, tools, and any other required resources, including outside resources, such as contractors, OEMs, and vendors, to accomplish the activity.

- Arrow Destination (M): A23—Perform passenger services

Passengers after checking-in: Passengers after check-in and ready for security check, if applicable.

- Arrow Source (O): A2332—Provide check-in services
- Arrow Destination (I): A2333—Provide security services

Passengers denied boarding: Passengers who are denied boarding because they are:

- Unruly
- Intoxicated or under the influence of suspected drugs
- A security threat
- Improperly documented minors
- Lacking proper international travel documents

- Arrow Source (O): A2332—Provide check-in services
- Arrow Source (O): A2333—Provide security services
- Arrow Source (O): A2334—Provide seating services

Passengers on board for departure: Passengers sitting in their seats ready for departure.

- Arrow Source (O): A2334—Provide seating services
- Arrow Destination (I): A234—Perform in-flight services

Passengers on board for deplaning: Passengers exiting their seats and preparing to leave the aircraft once the aircraft arrives and parks at the destination.

- Arrow Source (O): A234—Perform in-flight services
- Arrow Destination (I): A235—Perform deplaning services

Passengers passing security screening: Passengers who pass the safety screen at the airport and are permitted to board an aircraft.

- Arrow Source (O): A2333—Provide security services
- Arrow Destination (I): A2334—Provide seating services

Payload acceptance status: Continuously updated information regarding the conditions that exist in the payload acceptance.

- Arrow Source (O): A1324—Accept payload

Payload acceptance resources: The elements necessary for the successful accomplishment of payload acceptance. The elements are defined as properly trained and certified personnel, adequate facilities, required information, materials, equipment, tools, and any other required resources, including outside resources, such as contractors, OEMs, and vendors, to accomplish the activity.

- Arrow Destination (M): A1324—Accept payload

Payload at departure airport: Passengers/cargo at an airport ready to be transported to another airport.

- Arrow Source (I): { Border }
- Arrow Destination (I): A242—Perform ground handling
- Arrow Destination (I): A2332—Provide check-in services

Payload at destination airport: Passengers/cargo landed with aircraft at the destination airport after flight.

- Arrow Source (O): A235—Perform deplaning services
- Arrow Destination (O): { Border }
- Arrow Source (O): A242—Perform ground handling

Payload information: Data related to payload such as category (i.e., passengers, cargo, mail, and animals/reptiles/birds), types (i.e., medical, dangerous goods and materials), security, dangerous goods, and considerations (i.e., average passenger weight).

- Arrow Source (I): { Border }
- Arrow Destination (I): A1324—Accept payload

Payload security and weight balance: Information about accepted payload including classification of payload, i.e., dangerous goods, based on category (i.e., cargo, mail, and animals/reptiles/birds), types (i.e., medical, dangerous goods and materials), security, and considerations (i.e., average passenger weight).

- Arrow Source (O): A1324—Accept payload
- Arrow Destination (I): A1325—Perform load/fuel planning

Performance standard setting directives: A set of policies, procedures, and instructions that directs setting the performance standards.

- Arrow Destination (C): A433—Set performance standards

Performance standard setting status: Continuously updated information regarding the conditions that exist in the performance standard setting.

- Arrow Source (O): A433—Set performance standards

Performance standards: The standards that specify the level of performance personnel should achieve after training.

- Arrow Source (O): A433—Set performance standards
- Arrow Destination (I): A434—Select training provider
- Arrow Destination (I): A435—Develop training curriculum
- Arrow Destination (C): A452—Conduct training system evaluation
- Arrow Destination (C): A453—Conduct personnel evaluation

Performance standards setting resources: The elements necessary for the successful accomplishment of performance standard setting. The elements are defined as properly trained and certified personnel, adequate facilities, required information, materials, equipment, tools, and any other required resources, including outside resources, such as contractors, OEMs, and vendors, to accomplish the activity.

- Arrow Destination (M): A433—Set performance standards

Personnel after aircraft training: Personnel who have completed aircraft training.

- Arrow Source (O): A445—Conduct aircraft training

Personnel after instructor-led training: Personnel who have completed class training.

- Arrow Source (O): A442—Conduct instructor-led training

Personnel after self-study training: Personnel who have completed self-study training.

- Arrow Source (O): A443—Conduct self-study training

Personnel completing training evaluation: Personnel who have passed the training evaluation. Those who fail the training evaluation may need to be retrained.

- Arrow Source (O): A453—Conduct personnel evaluation

Personnel after simulator training: Personnel who have completed device or simulator training.

- Arrow Source (O): A444—Conduct device/simulator training

Personnel after training: Personnel who have completed training, including OJT.

- Arrow Destination (I): A452—Conduct training system evaluation
- Arrow Destination (I): A453—Conduct personnel evaluation

Personnel assignment release status: Continuously updated information regarding the conditions that exist in the personnel assignment release.

- Arrow Source (O): A555—Release personnel for assignment

Personnel for training: Personnel who require training to improve their skills and knowledge to be qualified to conduct certain tasks.

- Arrow Source (O): A552—Select candidates for job positions
- Arrow Destination (I): A442—Conduct instructor-led training
- Arrow Source (O): A553—Review currency status
- Arrow Destination (I): A443—Conduct self-study training
- Arrow Destination (I): A444—Conduct device/simulator training
- Arrow Destination (I): A445—Conduct aircraft training

Personnel information: Information about personnel, including existing personnel and candidates to be considered for reassignment or hiring.

- Arrow Source (O): A53—Collect resource information
- Arrow Destination (I): A551—Manage human resource provision

Personnel completing training evaluation: Personnel who successfully pass the aircraft training evaluation. Those who fail the training evaluation may need to be retrained or terminated.

- Arrow Source (O): A453—Conduct personnel evaluation

Personnel completing currency check: Personnel who meet the currency requirements.

- Arrow Source (O): A553—Review currency status
- Arrow Destination (I): A555—Release personnel for assignment

Personnel completing flight/duty time check: Personnel who meet the flight/duty time requirements.

- Arrow Source (O): A554—Review flight/duty time status
- Arrow Destination (I): A555—Release personnel for assignment

Training system after completing system training evaluation: Training system process succeeded in system training evaluation. The processes that fail the system training evaluation may need to be improved.

- Arrow Source (O): A452—Conduct training system evaluation

Personnel qualification requirements: Requirements for personnel who are qualified to conduct certain tasks.

- Arrow Source (C): { Border }
- Arrow Destination (C): A41—Manage personnel training

Personnel release directives: A set of policies, procedures, and instructions that directs the personnel release.

- Arrow Destination (C): A555—Release personnel for assignment

Personnel release resources: The elements necessary for the successful accomplishment of personnel release. The elements are defined as properly trained and certified personnel, required information, materials, equipment, tools, and any other required resources, including outside resources, such as contractors, OEMs, and vendors, to accomplish the activity.

- Arrow Destination (M): A555—Release personnel for assignment

Personnel to be assigned: Existing employees that are going to be assigned new tasks.

- Arrow Source (I): { Tunnel }
- Arrow Destination (I): A553—Review currency status
- Arrow Destination (I): A554—Review flight/duty time status

Personnel training execution directives: A set of policies, procedures, and instructions that directs the execution of personnel training.

- Arrow Source (O): A41—Manage personnel training

Personnel training management resources: The elements necessary for the successful accomplishment of personnel training management. The elements are defined as properly trained and certified personnel, adequate facilities, required information, material support, and any other required resources, including outside resources, such as contractors, OEMs, and vendors, to accomplish the activity.

- Arrow Destination (M): A41—Manage personnel training

Personnel training status: Continuously updated information regarding the conditions that exist in this function. For personnel training status, this includes training currency.

- Arrow Source (O): A41—Manage personnel training

Personnel training records: A record documenting the completion of personnel training, including AQP data.

- Arrow Source (O): A41—Manage personnel training

Personnel training resources: The elements necessary for the successful accomplishment of personnel training. The elements are defined as properly trained and certified personnel, including OJT instructors, adequate facilities, required information, materials, equipment, tools, and any other required resources, including outside resources, such as contractors, OEMs, and vendors, to accomplish the activity.

- Arrow Destination (M): A4—Perform personnel training

Planning coordination resources: The elements necessary for the successful accomplishment of planning coordination. The elements are defined as properly trained and certified personnel, adequate facilities, required information, material support, and any other required resources, including outside resources, such as contractors, OEMs, and vendors, to accomplish the activity.

- Arrow Destination (M): A121—Coordinate plan development

Postarrival directives: A set of policies, procedures, and instructions that directs aircraft postarrival operations.

- Arrow Destination (C): A2545—Perform postarrival ground operations

Postarrival ground operation status: Continuously updated information regarding the conditions that exist in the postarrival ground operations.

- Arrow Source (O): A2545—Perform postarrival ground operations

Postarrival ground operation resources: The elements necessary for the successful accomplishment of postarrival ground operations. The elements are defined as properly trained and certified personnel, adequate facilities, required information, material support, and any other required resources, including outside resources, such as contractors, OEMs, and vendors, to accomplish the activity.

- Arrow Destination (M): A2545—Perform postarrival ground operations

Predeparture directives: A set of policies, procedures, and instructions that directs aircraft predeparture operations.

- Arrow Destination (C): A2522—Perform predeparture ground operations

Predeparture ground operation status: Continuously updated information regarding the conditions that exist in the predeparture ground operations.

- Arrow Source (O): A2522—Perform predeparture ground operations

Predeparture ground operation resources: The elements necessary for the successful accomplishment of predeparture ground operations. The elements are defined as properly trained and certified personnel, adequate facilities, required information, material support, and any other required resources, including outside resources, such as contractors, OEMs, and vendors, to accomplish the activity.

- Arrow Destination (M): A2522—Perform predeparture ground operations

Preflight cabin duty performance directives: A set of policies, procedures, and instructions that directs preflight cabin duty performance.

- Arrow Destination (C): A232—Perform preflight cabin duties

Preflight cabin duty performance status: Continuously updated information regarding the conditions that exist in performing preflight cabin duties.

- Arrow Source (O): A232—Perform preflight cabin duties

Preflight cabin duty performance resources: The elements necessary for the successful accomplishment of preflight cabin duty performance. The elements are defined as properly trained and certified personnel, adequate facilities, required information, materials, equipment, tools, and any other required resources, including outside resources, such as contractors, OEMs, and vendors, to accomplish the activity.

- Arrow Destination (M): A232—Perform preflight cabin duties

Preflight package: Flight information, including weather reports, flight routes, payload information, payload security and weight balance, load/fuel plan, assigned aircraft and crewmembers.

- Arrow Destination (I): A1332—Produce preflight package

Preflight package briefing: Dissemination of flight information package to the PIC.

- Arrow Source (O): A1332—Produce preflight package
- Arrow Destination (I): A1333—Initiate flight locating procedure

Preflight package produce directives: A set of policies, procedures, and instructions that directs the preflight package.

- Arrow Destination (C): A1332—Produce preflight package

Preflight package produce status: Continuously updated information regarding the conditions that exist in the preflight package.

- Arrow Source (O): A1332—Produce preflight package

Preflight package produce resources: The elements necessary for the successful accomplishment of preflight package. The elements are defined as properly trained and certified personnel, adequate facilities, required information, material support, and any other required resources, including outside resources, such as contractors, OEMs, and vendors, to accomplish the activity.

- Arrow Destination (M): A1332—Produce preflight package

Procured resource data: Information regarding the status of the resources such as received, accepted, rejected, quarantined, and incomplete.

- Arrow Source (O): A555—Release personnel for assignment
- Arrow Destination (I): A52—Identify resource needs
- Arrow Source (O): A564—Distribute resources

Proposed maintenance program changes: Presentation of proposed maintenance program changes.

- Arrow Source (O): A1523—Perform technical evaluation
- Arrow Destination (I): A1524—Apply approved inspection and maintenance program

QA administrative activity directives: A set of policies, procedures, and instructions to direct the QA administrative activity, if applicable.

- Arrow Destination (C): A3225—Perform QA administrative function

QA administrative activity status: Continuously updated information regarding the conditions that exist in the QA administrative activity, if applicable.

- Arrow Source (O): A3225—Perform QA administrative function

QA administrative activity resources: The elements necessary for the successful accomplishment of quality assurance administrative activity. The elements are defined as properly

- Arrow Destination (M): A3225—Perform QA administrative function

QA authorization: Authorization issued by QA personnel for conducting certain tasks, if applicable.

This also includes vendor and contractor approval list.

- Arrow Source (O): A3225—Perform QA administrative function
- Arrow Destination (C): A54—Procure resources
- Arrow Destination (I): A1524—Apply approved inspection and maintenance program

QA-driven actions: Quality assurance directions, if applicable, to take action due to quality assurance findings, i.e., surveillance, vendor notification, SUPs, and internal notification.

- Arrow Source (O): A3225—Perform QA administrative function
- Arrow Destination (C): A564—Distribute resources

QA executive directives: A set of policies, procedures, and instructions to direct the execution of QA, if applicable.

- Arrow Source (O): A3221—Manage QA process

QA management resources: The elements necessary for the successful accomplishment of quality assurance management. The elements are defined as properly trained and certified personnel, adequate facilities, required information, material support, and any other required resources to accomplish the activity, if applicable.

- Arrow Destination (M): A3221—Manage QA process

Qualified personnel: Personnel qualified to conduct certain tasks.

- Arrow Destination (I): A554—Review flight/duty time status

Quality assurance directives: A set of policies, procedures, and instructions that directs quality assurance, if applicable.

- Arrow Destination (C): A3221—Manage QA process

Quality assurance status: Continuously updated information regarding the conditions that exist in the quality assurance, if applicable.

- Arrow Source (O): A3221—Manage QA process

Quality assurance resources: The elements necessary for the successful accomplishment of quality assurance. The elements are defined as properly trained and certified personnel, adequate facilities, required information, materials, equipment, tools, and any other required resources, including outside resources, such as contractors, OEMs, and vendors, to accomplish the activity, if applicable.

- Arrow Destination (M): A322—Perform quality assurance

Quality control directives: A set of policies, procedures, and instructions that directs quality control.

- Arrow Destination (C): A323—Perform quality control

Quality control status: Continuously updated information regarding the conditions that exist in the quality control.

- Arrow Source (O): A323—Perform quality control

Quality control resources: The elements necessary for the successful accomplishment of quality control. The elements are defined as properly trained and certified personnel, adequate facilities, required information, materials, equipment, tools, and any other required resources, including outside resources, such as contractors, OEMs, and vendors, to accomplish the activity.

- Arrow Destination (M): A323—Perform quality control

Quality data analysis & response development directives: A set of policies, procedures, and instructions that directs quality data analysis and response development, if applicable.

- Arrow Destination (C): A3224—Analyze quality data & develop responses

Quality data analysis & response development status: Continuously updated information regarding the conditions that exist in the quality data analysis and response development, if applicable.

- Arrow Source (O): A3224—Analyze quality data & develop responses

Quality data analysis & response development resources: The elements necessary for the successful accomplishment of quality data analysis and response development. The elements are defined as properly trained and certified personnel, adequate facilities, required information, materials, equipment, tools, and any other required resources, including outside resources, such as contractors, OEMs, and vendors, to accomplish the activity, if applicable.

- Arrow Destination (M): A3224—Analyze quality data & develop responses

Quality surveillance directives: A set of policies, procedures, and instructions that directs quality surveillance.

- Arrow Destination (C): A321—Manage quality surveillance

Quality surveillance execution directives: A set of policies, procedures, and instructions that directs the execution of quality surveillance.

- Arrow Source (O): A321—Manage quality surveillance

Quality surveillance management resources: The elements necessary for the successful accomplishment of quality surveillance management. The elements are defined as properly trained and certified personnel, adequate facilities, required information, materials, equipment, tools, and any other required resources, including outside resources, such as contractors, OEMs, and vendors, to accomplish the activity.

- Arrow Destination (M): A321—Manage quality surveillance

Quality surveillance status: Continuously updated information regarding the conditions that exist in the quality surveillance.

- Arrow Source (O): A321—Manage quality surveillance

Quality surveillance resources: The elements necessary for the successful accomplishment of quality surveillance. The elements are defined as properly trained and certified personnel, adequate facilities, required information, materials, equipment, tools, and any other required resources, including outside resources, such as contractors, OEMs, and vendors, to accomplish the activity.

- Arrow Destination (M): A32—Perform surveillance of maintenance

Reassigned personnel: Personnel who are assigned to different positions.

- Arrow Destination (I): A552—Select candidates for job positions

Recommended vendor and contractor information: Information of desired vendors and contractors for certificate holders to consider procuring required resources.

The selected vendor or contractor should be approved by authorized personnel.

- Arrow Source (O): A53—Collect resource information
- Arrow Destination (I): A54—Procure resources

Recordkeeping & reporting directives: A set of policies, procedures, and instructions that directs the recordkeeping and reporting.

- Arrow Destination (C): A172—Perform recordkeeping & reporting

Recordkeeping & reporting status: Continuously updated information regarding the conditions that exist in the recordkeeping and reporting.

- Arrow Source (O): A172—Perform recordkeeping & reporting

Recordkeeping & reporting resources: The elements necessary for the successful accomplishment of recordkeeping and reporting. The elements are defined as properly trained and certified personnel, adequate facilities, required information, materials, equipment, tools, and any other required resources, including outside resources, such as contractors, OEMs, and vendors, to accomplish the activity.

- Arrow Destination (M): A172—Perform recordkeeping & reporting

Regulatory or other external liaison: Approval, disapproval, consultation, or request for modification from the FAA or appropriate regulatory body regarding specific requests.

Informal communication may occur directly with maintenance control; however, formal communications occur with either QA or engineering, if applicable.

This also includes voluntary disclosures, regulatory investigations, (i.e., LOI), OSHA, Environmental Protection Agency, Food and Drug Administration, Research and Special Program Administration, state/local regulations, U.S. Coast Guard, externally generated hotline complaints (i.e., Whistleblower Protection Act), and letters of investigations.

Note: This also includes independent external audit results being supplied to A11-manage certificate holder functions (i.e., Department of Defense certificate holder survey and code share survey).

- Arrow Source (I): { Border }
- Arrow Destination (I): A11—Manage certificate holder functions
- Arrow Destination (I): A134—Perform maintenance control
- Arrow Destination (I): A162—Collect/analyze safety data
- Arrow Destination (I): A342—Perform standardization & modification
- Arrow Destination (I): A3225—Perform QA administrative function

Rejected cargo: Cargo that did not pass the requirements for acceptance.

- Arrow Source (O): A2432—Check/weigh/accept cargo

Rejected part tracking: Information about rejected parts, such as serial number.

- Arrow Source (O): A562—Receive resources
- Arrow Destination (C): A323—Perform quality control

Rejected parts and tools: Parts and tools that have failed final or receiving inspection.

- Arrow Source (O): A323—Perform quality control
- Arrow Destination (I): A33343—Evaluate/maintain aircraft components
- Arrow Destination (I): A562—Receive resources

Rejected payload: Payload that did not pass the requirements for acceptance.

- Arrow Destination (O): { Border }

Rejected payload information: Information about rejected payload.

- Arrow Source (O): A1324—Accept payload
- Arrow Destination (I): A1325—Perform load/fuel planning

Reliability data: Information developed and gathered by certificate holders as required by their maintenance program to identify characteristics indicating a need for program adjustment, revision to maintenance practices, or hardware improvement (modification), if applicable.

Examples of these sources of data include:

- Pilot reports
- In-flight engine performance data
- Mechanical interruptions/delays
- Engine shutdowns
- Unscheduled removals
- Confirm failures
- Functional checks
- Bench checks
- Shop findings
- Sampling inspections
- Inspection write-ups
- Service difficulty reports
- Audit findings
- Warranty information
- MRRs

Note: This section refers to certificate holders without an approved reliability program, including CASS data, if applicable.

- Arrow Source (O): A1522—Collect & process operational data
- Arrow Destination (I): A162—Collect/analyze safety data
- Arrow Destination (I): A1523—Perform technical evaluation
- Arrow Destination (I): A343—Perform aircraft/fleet operation support

Request for engineering services: Formal requests for instruction, guidance, interpretation, or approval from engineering, including:

- Technical services
- Changing documents
- Equivalents (tools, equipment, and materials)
- Owner-produced parts

- Arrow Source (O): A331—Manage aircraft maintenance
- Arrow Destination (I): A341—Manage engineering support

Request for resources: Request for procurement of resources either through outside purchasing, borrowing, hiring and contracting, or by allocating existing resources.

- Arrow Source (O): A54—Procure resources
- Arrow Destination (I): A172—Perform recordkeeping & reporting
- Arrow Destination (I): A555—Release personnel for assignment
- Arrow Destination (I): A564—Distribute resources

Requirements for training revision: Requests for revising training process after evaluating the training performance.

- Arrow Source (O): A451—Manage training evaluation
- Arrow Destination (I): A431—Manage training design & development

Resource distribution directives: A set of policies, procedures, and instructions that directs resource distribution.

- Arrow Destination (C): A564—Distribute resources

Resource distribution status: Continuously updated information regarding the conditions that exist in the resource distribution.

- Arrow Source (O): A564—Distribute resources

Resource distribution resources: The elements necessary for the successful accomplishment of resource distribution. The elements are defined as properly trained and certified personnel,

adequate facilities, required information, materials, equipment, tools, and any other required resources, including outside resources, such as contractors, OEMs, and vendors, to accomplish the activity.

- Arrow Destination (M): A564—Distribute resources

Resource handling directives: A set of policies, procedures, and instructions that directs resource handling.

- Arrow Destination (C): A561—Manage material resource handling

Resource handling execution directives: A set of policies, procedures, and instructions that directs execution of resource handling.

- Arrow Source (O): A561—Manage material resource handling

Resource handling management resources: The elements necessary for the successful accomplishment of resource handling management. The elements are defined as properly trained and certified personnel, adequate facilities, required information, materials, equipment, tools, and any other required resources, including outside resources, to accomplish the activity.

- Arrow Destination (M): A561—Manage material resource handling

Resource handling status: Continuously updated information regarding the conditions that exist in resource handling.

- Arrow Source (O): A561—Manage material resource handling

Resource information collection directives: A set of policies, procedures, and instructions that directs the resource information collection.

- Arrow Destination (C): A53—Collect resource information

Resource information collection status: Continuously updated information regarding the conditions that exist in the resource information collection.

- Arrow Source (O): A53—Collect resource information

Resource information collection resources: The elements necessary for the successful accomplishment of resource information collection. The elements are defined as properly trained and certified personnel, adequate facilities, required information, materials, equipment, tools, and any other required resources, including outside resources, to accomplish the activity.

- Arrow Destination (M): A53—Collect resource information

Resource need identification directives: A set of policies, procedures, and instructions that directs the resource need identification.

- Arrow Destination (C): A52—Identify resource needs

Resource need identification status: Continuously updated information regarding the conditions that exist in the resource need identification.

- Arrow Source (O): A52—Identify resource needs

Resource need identification resources: The elements necessary for the successful accomplishment of resource need identification. The elements are defined as properly trained and certified personnel, adequate facilities, required information, materials, equipment, tools, and any other required resources, including outside resources, to accomplish the activity.

- Arrow Destination (M): A52—Identify resource needs

Resource needs: Specifications on what, when, and how many resources are needed based on the analysis of the resource provision plan and certificate holder operation information, as well as feedback from resource handling.

- Arrow Source (O): A52—Identify resource needs
- Arrow Destination (I): A53—Collect resource information

Resource procurement directives: A set of policies, procedures, and instructions that directs the resource procurement.

- Arrow Destination (C): A54—Procure resources

Resource procurement status: Continuously updated information regarding the conditions that exist in the resource procurement.

- Arrow Source (O): A54—Procure resources

Resource procurement resources: The elements necessary for the successful accomplishment of resource procurement. The elements are defined as properly trained and certified personnel, adequate facilities, required information, materials, equipment, tools, and any other required resources, including outside resources, to accomplish the activity.

- Arrow Destination (M): A54—Procure resources

Resource provision plan: Definition of resources necessary to support planned operations, such as:

- Facilities
- Personnel

- Tooling
- Required aircraft
- Materials

- Arrow Source (O): A125—Develop resource provision plan
- Arrow Destination (I): A52—Identify resource needs

Resource provision planning directives: A set of policies, procedures, and instructions that directs resource provision planning.

- Arrow Destination (C): A125—Develop resource provision plan

Resource provision planning status: Continuously updated information regarding the conditions that exist in the resource provision planning.

- Arrow Source (O): A125—Develop resource provision plan

Resource provision records: Information, recorded from instrument or written reports, describing the status, results, costs, profits, conformance to requirements, and other aspects of resource provision.

- Arrow Source (O): A51—Manage certificate holder operation resource provision

Resource receiving directives: A set of policies, procedures, and instructions that directs the resource receiving process.

- Arrow Destination (C): A562—Receive resources

Resource receiving status: Continuously updated information regarding the conditions that exist in the resource receiving process.

- Arrow Source (O): A562—Receive resources

Resource receiving resources: The elements necessary for the successful accomplishment of resource receiving. The elements are defined as properly trained and certified personnel, adequate facilities, required information, materials, equipment, tools, and any other required resources, including outside resources, to accomplish the activity.

- Arrow Destination (M): A562—Receive resources

Resource storing directives: A set of policies, procedures, and instructions that directs the resource storing process.

- Arrow Destination (C): A563—Store resources

Resource storing status: Continuously updated information regarding the conditions that exist in the resource storing process.

- Arrow Source (O): A563—Store resources

Resource storing resources: The elements necessary for the successful accomplishment of resource storing. The elements are defined as properly trained and certified personnel, adequate facilities, required information, materials, equipment, tools, and any other required resources, including outside resources, to accomplish the activity.

- Arrow Destination (M): A563—Store resources

Resources for distribution: Available and serviceable resources ready to be distributed for use.

- Arrow Source (O): A563—Store resources
- Arrow Destination (I): A564—Distribute resources

Safety awareness information: Information provided for the purpose of safety awareness.

- Arrow Source (O): A165—Perform safety awareness program
- Arrow Destination (I): A172—Perform recordkeeping & reporting
- Arrow Destination (I): A173—Administer technical publication

Safety awareness program directives: A set of policies, procedures, and instructions that directs the safety awareness program.

- Arrow Destination (C): A165—Perform safety awareness program

Safety awareness program status: Continuously updated information regarding the conditions that exist in the safety awareness program.

- Arrow Source (O): A165—Perform safety awareness program

Safety awareness program resources: The elements necessary for the successful accomplishment of safety awareness program. The elements are defined as properly trained and certified personnel, adequate facilities, required information, materials, equipment, tools, and any other required resources, including outside resources, such as contractors, OEMs, and vendors, to accomplish the activity.

- Arrow Destination (M): A165—Perform safety awareness program

Safety data collection and analysis directives: A set of policies, procedures, and instructions that directs the safety data collection and analysis, if applicable.

- Arrow Destination (C): A162—Collect/analyze safety data

Safety data collection and analysis status: Continuously updated information regarding the conditions that exist in the safety data collection and analysis, if applicable.

- Arrow Source (O): A162—Collect/analyze safety data

Safety data collection and analysis resources: The elements necessary for the successful accomplishment of safety data collection and analysis. The elements are defined as properly trained and certified personnel, adequate facilities, required information, materials, equipment, tools, and any other required resources, including outside resources, such as contractors, OEMs, and vendors, to accomplish the activity, if applicable.

- Arrow Destination (M): A162—Collect/analyze safety data

Safety management recommendation and findings: Recommendations related to action, including:

- Request for policy and procedure changes
- Request for management action
- Request for engineering action
- Request for staffing and organization changes
- Request for training changes
- Discrepancies identified during IEP
- Discrepancies identified during investigation:
    - Process owner
    - Internally independent, i.e., QA, safety department
- Voluntary disclosure
- ASAP reports, if approved
- Lesson-learned recommendation

- Arrow Source (O): A163—Perform investigation
- Arrow Destination (I): A11—Manage certificate holder functions

Safety program administration directives: A set of policies, procedures, and instructions that directs the safety program administration, if applicable.

- Arrow Destination (C): A161—Manage safety program administration

Safety program administration execution directives: A set of policies, procedures, and instructions that directs the execution of safety program administration, if applicable. This may include:

- Event Review Committee policies
- Labor and management policies on FOQA data

- Arrow Source (O): A161—Manage safety program administration

Safety program administration management resources: The elements necessary for the successful accomplishment of safety program administration management. The elements are defined as properly trained and certified personnel, adequate facilities, required information, materials, equipment, tools, and any other required resources, including outside resources, such as contractors, OEMs, and vendors, to accomplish the activity, if applicable.

- Arrow Destination (M): A161—Manage safety program administration

Safety program administration status: Continuously updated information regarding the conditions that exist in the safety program administration, if applicable.

- Arrow Source (O): A161—Manage safety program administration

Safety program administration resources: The elements necessary for the successful accomplishment of safety program administration. The elements are defined as properly trained and certified personnel, adequate facilities, required information, materials, equipment, tools, and any other required resources, including outside resources, such as contractors, OEMs, and vendors, to accomplish the activity, if applicable.

Scheduled and nonscheduled aircraft maintenance directives: A set of policies, procedures, and instructions that directs scheduled and nonscheduled aircraft maintenance.

- Arrow Destination (C): A3331—Manage scheduled/nonscheduled aircraft maintenance

Scheduled and nonscheduled aircraft maintenance management resources: The elements necessary for the successful accomplishment of scheduled and nonscheduled aircraft maintenance management. The elements are defined as properly trained and certified personnel, adequate facilities, required information, material support, and any other required resources to accomplish the activity.

- Arrow Destination (M): A3331—Manage scheduled/nonscheduled aircraft maintenance

Scheduled and nonscheduled aircraft maintenance resources: The elements necessary for the successful accomplishment of scheduled and nonscheduled aircraft maintenance. The elements are defined as properly trained and certified personnel, adequate facilities, required information, materials, equipment, tools, and any other required resources, including outside resources, such as contractors, OEMs, and vendors, to accomplish the activity.

- Arrow Destination (M): A333—Perform scheduled/nonscheduled maintenance

Scheduled and nonscheduled aircraft maintenance status: Continuously updated information regarding the conditions that exist in the scheduled and nonscheduled aircraft maintenance.

- Arrow Source (O): A3331—Manage scheduled/nonscheduled aircraft maintenance

Scheduled and nonscheduled maintenance execution directives: A set of policies, procedures, and instructions that directs the execution of scheduled and nonscheduled aircraft maintenance.

- Arrow Source (O): A3331—Manage scheduled/nonscheduled aircraft maintenance

Seating service directives: A set of policies, procedures, and instructions that directs seating services.

- Arrow Destination (C): A2334—Provide seating services

Seating service status: Continuously updated information regarding the conditions that exist in the seating services.

- Arrow Source (O): A2334—Provide seating services

Seating service resources: The elements necessary for the successful accomplishment of seating services. The elements are defined as properly trained and certified personnel, adequate facilities, required information, materials, equipment, tools, and any other required resources, including outside resources, such as contractors, OEMs, and vendors, to accomplish the activity.

- Arrow Destination (M): A2334—Provide seating services

Security: Regulatory requirements to ensure compliance with regard to various security activities, such as:

- Dangerous goods
- Airport
- Passengers
- Drug and alcohol programs

- Arrow Source (O): A11—Manage certificate holder functions
- Arrow Destination (C): A1531—Manage operations policy & procedure development

Security service directives: A set of policies, procedures, and instructions that directs security services.

- Arrow Destination (C): A2333—Provide security services

Security service status: Continuously updated information regarding the conditions that exist in the security services.

- Arrow Source (O): A2333—Provide security services

Security service resources: The elements necessary for the successful accomplishment of security services. The elements are defined as properly trained and certified personnel, adequate facilities,

required information, materials, equipment, tools, and any other required resources, including outside resources, such as contractors, OEMs, and vendors, to accomplish the activity.

- Arrow Destination (M): A2333—Provide security services

Self-study training resources: The elements necessary for the successful accomplishment of self-study training. The elements are defined as properly trained and certified personnel, adequate facilities, required information, materials, equipment, tools, and any other required resources, including outside resources, such as contractors, OEMs, and vendors, to accomplish the activity.

- Arrow Destination (M): A443—Conduct self-study training

Self-study training directives: A set of policies, procedures, and instructions that directs self-study training.

- Arrow Destination (C): A443—Conduct self-study training

Self-study training status: Continuously updated information regarding the conditions that exist in self-study training.

- Arrow Source (O): A443—Conduct self-study training

Shop findings data: Conditions of components found during repair.

- Arrow Source (O): A33344—Perform part usage analysis
- Arrow Destination (I): A1522—Collect & process operational data

Short-term trend: Data on recent repeat maintenance problems.

- Arrow Source (O): A1522—Collect & process operational data

Special evaluation: The outcome of an investigation that triggers the needs to audit a specific operational area.

- Arrow Source (O): A163—Perform investigation
- Arrow Destination (I): A164—Perform internal evaluation

Special flight operations: Flight required special authorizations or maintenance programs, such as:

- Ferry flight
- RVSM
- RNP
- CAT II and III
- ETOP
- Nonrevenue flight

- MEL/CDL relief
- Special operations
- Carry-over maintenance

- Arrow Source (O): A343—Perform aircraft/fleet operation support
- Arrow Destination (C): A21—Manage air transportation
- Arrow Destination (C): A134—Perform maintenance control
- Arrow Destination (C): A321—Manage quality surveillance

Special request requirements: Data needed to substantiate special requests. This includes the justification to remove a maintenance vendor based on a negative reliability trend.

- Arrow Source (O): A3224—Analyze quality data & develop responses
- Arrow Destination (I): A3225—Perform QA administrative function

Special tools and test equipment for distribution: Special tools and test equipment that do not require receiving inspection and can be directly distributed for use.

- Arrow Source (O): A562—Receive resources
- Arrow Destination (I): A564—Distribute resources

Standardization & modification directives: A set of policies, procedures, and instructions that directs standardization and modification.

- Arrow Destination (C): A342—Perform standardization & modification

Standardization & modification status: Continuously updated information regarding the conditions that exist in the standardization and modification.

- Arrow Source (O): A342—Perform standardization & modification

Standardization & modification resources: The elements necessary for the successful accomplishment of standardization and modification. The elements are defined as properly trained and certified personnel, adequate facilities, required information, materials, equipment, tools, and any other required resources, including outside resources, such as contractors, OEMs, and vendors, to accomplish the activity.

- Arrow Destination (M): A342—Perform standardization & modification

Submission of maintenance program changes: Delivery of proposed maintenance program changes.

- Arrow Source (O): A1524—Apply approved inspection and maintenance program

Support requirements: Needs for supporting a certain activity.

- Arrow Source (O): A1523—Perform technical evaluation

System training evaluation directives: A set of policies, procedures, and instructions that directs system training evaluation.

- Arrow Destination (C): A452—Conduct training system evaluation

System training evaluation status: Continuously updated information regarding the conditions that exist in the system training evaluation.

- Arrow Source (O): A452—Conduct training system evaluation

System training evaluation resources: The elements necessary for the successful accomplishment of system training. The elements are defined as properly trained and certified personnel, adequate facilities, required information, materials, equipment, tools, and any other required resources, including outside resources, such as contractors, OEMs, and vendors, to accomplish the activity.

- Arrow Destination (M): A452—Conduct training system evaluation

Takeoff directives: A set of policies, procedures, and instructions that directs aircraft takeoff.

- Arrow Destination (C): A25231—Manage takeoff operations

Takeoff directives at or after V1: A set of policies, procedures, and instructions that directs aircraft takeoff after its airspeed surpasses V1, if applicable.

- Arrow Destination (C): A25233—Perform takeoff at/after V1

Takeoff directives prior to V1: A set of policies, procedures, and instructions that directs aircraft takeoff before its airspeed reaches V1, if applicable.

- Arrow Destination (C): A25232—Perform takeoff prior to V1

Takeoff execution directives: A set of policies, procedures, and instructions that directs the execution of aircraft takeoff operations.

- Arrow Source (O): A25231—Manage takeoff operations

Takeoff management resources: The elements necessary for the successful accomplishment of aircraft takeoff management. The elements are defined as properly trained and certified personnel,

adequate facilities, required information, material support, and any other required resources, including outside resources, such as contractors, OEMs, and vendors, to accomplish the activity.

- Arrow Destination (M): A25231—Manage takeoff operations

Takeoff status: Continuously updated information regarding the conditions that exist in the aircraft takeoff.

- Arrow Source (O): A25231—Manage takeoff operations

Takeoff status at or after V1: Status of performance report during the execution of aircraft takeoff after its airspeed surpasses V1, if applicable.

- Arrow Source (O): A25233—Perform takeoff at/after V1

Takeoff status prior to V1: Real-time performance report during the execution of aircraft takeoff before its airspeed reaches V1, if applicable.

- Arrow Source (O): A25232—Perform takeoff prior to V1

Takeoff resources: The elements necessary for the successful accomplishment of aircraft takeoff. The elements are defined as properly trained and certified personnel, required information, and material support.

- Arrow Destination (M): A2523—Perform takeoff operations

Takeoff resources at or after V1: The elements necessary for the successful accomplishment of aircraft takeoff after its airspeed surpasses V1, if applicable. The elements are defined as properly trained and certified personnel, required information, and material support.

- Arrow Destination (M): A25233—Perform takeoff at/after V1

Takeoff resources prior to V1: The elements necessary for the successful accomplishment of aircraft takeoff before its airspeed reaches V1, if applicable. The elements are defined as properly trained and certified personnel, required information, and material support.

- Arrow Destination (M): A25232—Perform takeoff prior to V1

Technical communication & reporting: Documents and dialogue generated during the operations of a certificate holder used for communicating with external organizations such as the FAA, OEM, contractors, and others in the industry. This includes one carrier communicating with another carrier, such as:

- Voluntary disclosure program
- AMOC

- Arrow Source (O): A341—Manage engineering support
- Arrow Destination (I): A172—Perform recordkeeping & reporting

Technical data: A set of technical information including shared industry data, data supplied by regulatory authorities, and OEM guidance.

The shared industry data refers to the exchange of data and information between the aviation community via committee, review board, working group, conferences, electronic data exchange, and the following:

- Association membership, i.e., Regional Airlines Association, Aerospace Industry Association, Flight Safety Foundation, International Society of Air Safety Investigators, and National Air Transportation Association

- Subscriptions, e.g., Airclaims

Data supplied by regulatory authorities include the Service Difficulty Report and the Accident Investigation Report.

- Arrow Source (I): { Border }
- Arrow Destination (I): A154—Develop training policies & procedures
- Arrow Destination (I): A162—Collect/analyze safety data
- Arrow Destination (I): A172—Perform recordkeeping & reporting
- Arrow Destination (I): A173—Administer technical publication
- Arrow Destination (I): A1523—Perform technical evaluation
- Arrow Destination (I): A342—Perform standardization & modification
- Arrow Destination (I): A343—Perform aircraft/fleet operation support

Technical evaluation directives: A policy that defines the appropriate analytical processes.

- Arrow Destination (C): A1523—Perform technical evaluation

Technical evaluation resources: The elements necessary for the successful accomplishment of technical evaluation. The elements are defined as properly trained and certified personnel, adequate facilities, required information, materials, equipment, tools, and any other required resources, including outside resources, such as contractors, OEMs, and vendors, to accomplish the activity.

- Arrow Destination (M): A1523—Perform technical evaluation

Technical publication administration directives: A set of policies, procedures, and instructions that directs the technical publications.

- Arrow Destination (C): A173—Administer technical publication

Technical publication administration status: Continuously updated information regarding the conditions that exist in the technical publication administration.

- Arrow Source (O): A173—Administer technical publication

Technical publication administration resources: The elements necessary for the successful accomplishment of technical publication administration. The elements are defined as properly trained and certified personnel, adequate facilities, required information, materials, equipment, tools, and any other required resources to accomplish the activity.

- Arrow Destination (M): A173—Administer technical publication

Terminated personnel: Personnel no longer employed by the company.

- Arrow Source (O): A553—Review currency status
- Arrow Destination (O): { Border }

Training courseware: Instructional material developed for each curriculum. This includes information in lesson plans, instructor guides, computer software programs, audiovisual programs, workbooks, aircraft operating manuals, and handouts. Courseware must accurately reflect curriculum requirements, be effectively organized, and properly integrate with instructional delivery methods, including computer-based training and OJT training.

- Arrow Source (O): A435—Develop training curriculum
- Arrow Destination (M): A442—Conduct instructor-led training

Training curriculum: A complete training agenda specific to an aircraft type, a crewmember or maintenance technician duty position, and a category of training. An example is an initial new-hire and recurrent training. Each curriculum consists of several curriculum segments.

- Arrow Source (O): A435—Develop training curriculum
- Arrow Destination (C): A441—Manage training implementation and record

Training curriculum development directives: A set of policies, procedures, and instructions that directs training curriculum development.

- Arrow Destination (C): A435—Develop training curriculum

Training curriculum development status: Continuously updated information regarding the conditions that exist in the training curriculum development.

- Arrow Source (O): A435—Develop training curriculum

Training curriculum development resources: The elements necessary for the successful accomplishment of training curriculum development. The elements are defined as properly trained and certified personnel, adequate facilities, required information, material support, and any other

required resources, including outside resources, such as contractors, OEMs, and vendors, to accomplish the activity.

- Arrow Destination (M): A435—Develop training curriculum

Training design & development directives: A set of policies, procedures, and instructions that directs training development.

- Arrow Destination (C): A431—Manage training design & development

Training design & development executive directives: A set of policies, procedures, and instructions that directs the execution of training design and development.

- Arrow Source (O): A431—Manage training design & development

Training design & development management resources: The elements necessary for the successful accomplishment of training design and development management. The elements are defined as properly trained and certified personnel, adequate facilities, required information, material support, and any other required resources, including outside resources, such as contractors, OEMs, and vendors, to accomplish the activity.

- Arrow Destination (M): A431—Manage training design & development

Training design & development status: Continuously updated information regarding the conditions that exist in training design and development.

- Arrow Source (O): A431—Manage training design & development

Training design & development resources: The elements necessary for the successful accomplishment of training design and development. The elements are defined as properly trained and certified personnel, adequate facilities, required information, material support, and any other required resources, including outside resources, such as contractors, OEMs, and vendors, to accomplish the activity.

- Arrow Destination (M): A43—Design & develop training

Training evaluation directives: A set of policies, procedures, and instructions that directs training evaluation.

- Arrow Destination (C): A451—Manage training evaluation

Training evaluation execution directives: A set of policies, procedures, and instructions that directs the execution of training evaluation.

- Arrow Source (O): A451—Manage training evaluation

Training evaluation management resources: The elements necessary for the successful accomplishment of training evaluation management. The elements are defined as properly trained and certified personnel, adequate facilities, required information, material support, and any other required resources, including outside resources, such as contractors, OEMs, and vendors, to accomplish the activity.

- Arrow Destination (M): A451—Manage training evaluation

Training evaluation status: Continuously updated information regarding the conditions that exist in the training evaluation.

- Arrow Source (O): A451—Manage training evaluation

Training evaluation resources: The elements necessary for the successful accomplishment of training evaluation. The elements are defined as properly trained and certified personnel, adequate facilities, required information, materials, equipment, tools, and any other required resources, including outside resources, such as contractors, OEMs, and vendors, to accomplish the activity.

- Arrow Destination (M): A45—Evaluate training

Training forecast: Estimated training needs required to perform a certain task.

- Arrow Source (O): A124—Develop training plan
- Arrow Destination (I): A41—Manage personnel training

Training implementation and record directives: A set of policies, procedures, and instructions that directs training implementation and record.

- Arrow Destination (C): A441—Manage training implementation and record

Training implementation and record status: Continuously updated information regarding the conditions that exist in the training implementation and record.

- Arrow Source (O): A441—Manage training implementation and record

Training implementation and record resources: The elements necessary for the successful accomplishment of training implementation and record. The elements are defined as properly trained and certified personnel, adequate facilities, required information, material, equipment, tools, and any required resources, including outside resources, such as contractors, OEMs, and vendors, to accomplish the activity.

- Arrow Destination (M): A44—Implement and record training

Training implementation and record execution directives: A set of policies, procedures, and instructions that directs the execution of training implementation and record.

- Arrow Source (O): A441—Manage training implementation and record

Training implementation and record management resources: The elements necessary for the successful accomplishment of training implementation and record management. The elements are defined as properly trained and certified personnel, adequate facilities, required information, material support, and any other required resources, including outside resources, such as contractors, OEMs, and vendors, to accomplish the activity.

- Arrow Destination (M): A441—Manage training implementation and record

Training objective development directives: A set of policies, procedures, and instructions that directs training objective development.

- Arrow Destination (C): A432—Develop training objectives

Training objective development status: Continuously updated information regarding the conditions that exist in the training objective development.

- Arrow Source (O): A432—Develop training objectives

Training objective development resources: The elements necessary for the successful accomplishment of training objective development. The elements are defined as properly trained and certified personnel, adequate facilities, required information, material support, and any other required resources, including outside resources, such as contractors, OEMs, and vendors, to accomplish the activity.

- Arrow Destination (M): A432—Develop training objectives

Training objectives: The goals of the training.

- Arrow Source (O): A432—Develop training objectives
- Arrow Destination (I): A433—Set performance standards

Training planning directives: A set of policies, procedures, and instructions that directs training planning.

- Arrow Destination (C): A124—Develop training plan

Training planning status: Continuously updated information regarding the conditions that exist in the training planning.

- Arrow Source (O): A124—Develop training plan

Training planning resources: The elements necessary for the successful accomplishment of training planning. The elements are defined as properly trained and certified personnel, adequate facilities, required information, materials, equipment, tools, and any other required resources, including outside resources, such as contractors, OEMs, and vendors, to accomplish the activity.

- Arrow Destination (M): A124—Develop training plan

Training policies & procedures: The policy and procedures for directing personnel training.

- Arrow Source (O): A154—Develop training policies & procedures
- Arrow Destination (I): A41—Manage personnel training

Training policy & procedure development directives: A set of policies, procedures, and instructions that directs training policy and procedure development.

- Arrow Destination (C): A154—Develop training policies & procedures

Training policy & procedure development status: Continuously updated information regarding the conditions that exist in the training policy and procedure development.

- Arrow Source (O): A154—Develop training policies & procedures

Training policy & procedure development resources: The elements necessary for the successful accomplishment of training policy and procedure development. The elements are defined as properly trained and certified personnel, adequate facilities, required information, materials, equipment, tools, and any other required resources, including outside resources, such as contractors, OEMs, and vendors, to accomplish the activity.

- Arrow Destination (M): A154—Develop training policies & procedures

Training provider selection directives: A set of policies, procedures, and instructions that directs training provider selection.

- Arrow Destination (C): A434—Select training provider

Training provider selection status: Continuously updated information regarding the conditions that exist in the training provider selection.

- Arrow Source (O): A434—Select training provider

Training provider selection resources: The elements necessary for the successful accomplishment of training provider selection. The elements are defined as properly trained and

- Arrow Destination (M): A434—Select training provider

Training requirement analysis directives: A set of policies, procedures, and instructions that directs training requirement analysis.

- Arrow Destination (C): A42—Identify & analyze training requirements

Training requirement identification & analysis status: Continuously updated information regarding the conditions that exist in the training requirement identification and analysis.

- Arrow Source (O): A42—Identify & analyze training requirements

Training requirement identification & analysis resources: The elements necessary for the successful accomplishment of training requirement identification and analysis resources. The elements are defined as properly trained and certified personnel, adequate facilities, required information, material support, and any other required resources, including outside resources, such as contractors, OEMs, and vendors, to accomplish the activity.

- Arrow Destination (M): A42—Identify & analyze training requirements

Training requirements: Specifications on what kind of training is needed based on the analysis of job task requirement and personnel qualification requirement.

- Arrow Source (O): A42—Identify & analyze training requirements
- Arrow Destination (I): A432—Develop training objectives

Training system performance: Characteristics of the training system generated from the status reports from each training activity.

- Arrow Source (O): A41—Manage personnel training
- Arrow Destination (I): A452—Conduct training system evaluation
- Arrow Destination (I): A453—Conduct personnel evaluation

Transportation requirements: Specifications of transportation tasks.

- Arrow Source (C): { Border }
- Arrow Destination (C): A121—Coordinate plan development

Unserviceable parts and tooling for evaluation or repair: Parts and tools to both internal and external sources for evaluation or repair.

- Arrow Source (O): A562—Receive resources

- Arrow Destination (I): A33343—Evaluate/maintain aircraft components

Utilization projection: Estimation and specialization of utilization assets.

- Arrow Source (O): A14—Project utilization
- Arrow Destination (C): A21—Manage air transportation
- Arrow Destination (C): A31—Manage MIE
- Arrow Destination (C): A41—Manage personnel training
- Arrow Destination (C): A51—Manage certificate holder operation resource provision

Utilization projection directives: A set of policies, procedures, and instructions that directs utilization projection.

- Arrow Destination (C): A14—Project utilization

Utilization projection status: Continuously updated information regarding the conditions that exist in the projecting utilization.

- Arrow Source (O): A14—Project utilization

Utilization projection resources: The elements necessary for the successful accomplishment of utilization projection. The elements are defined as properly trained and certified personnel, adequate facilities, required information, materials, equipment, tools, and any other required resources, including outside resources, such as contractors, OEMs, and vendors, to accomplish the activity.

- Arrow Destination (M): A14—Project utilization

Utilization-based resource requirements: Requirements on resources in terms of utilization.

- Arrow Source (O): A331—Manage aircraft maintenance
- Arrow Destination (C): A561—Manage material resource handling

Weather evaluation directives: A set of policies, procedures, and instructions that directs weather evaluation.

- Arrow Destination (C): A1322—Evaluate weather

Weather evaluation status: Continuously updated information regarding the conditions that exist in the weather evaluation.

- Arrow Source (O): A1322—Evaluate weather

Weather evaluation resources: The elements necessary for the successful accomplishment of weather evaluation. The elements are defined as properly trained and certified personnel, adequate

facilities, required information, materials, equipment, tools, and any other required resources, including outside resources, such as contractors, OEMs, and vendors, to accomplish the activity.

- Arrow Destination (M): A1322—Evaluate weather

Weather information: Weather data comes from sources such as:

- National Weather Service
- International Weather Services
- Contractor Weather Services
- Other government weather services
- Field conditions
- SWARS
- RADAR
- Pilot reports

- Arrow Destination (I): A1322—Evaluate weather

Weather reports: A briefing created by in-house or outsource meteorological services based on the analysis and evaluation of weather information to provide weather service to certificate holder operations.

- Arrow Source (O): A1322—Evaluate weather
- Arrow Destination (I): A1323—Plan flight routes
- Arrow Destination (I): A1325—Perform load/fuel planning

7. GENERAL DEFINITIONS.

The following general definitions provide an understanding of the terms used in the 14 CFR Part 135 Certificate Holder Functional Model.

Abnormal: When abnormal is used to describe a procedure or process, it refers to a nonroutine operation in which certain procedures or actions must be taken to maintain an acceptable level of system integrity or airworthiness.

Activity: A named process, function, or task that occurs over time and has recognizable results. Activities use assigned resources to produce products and services.

Activity model: Model of the processes that make up the functional activity showing inputs, outputs, controls, and mechanisms through which the process of the functional activity are (or will be) conducted.

Airworthiness: A condition in which the aircraft, airframe, engine, propeller, accessories, and appliances meet their type design and are in a condition for safe operations.

Air carrier: A person who undertakes directly by lease, or other arrangement, to engage in air transportation.

Air traffic control: A service operated by appropriate authority to promote the safe, orderly, and expeditious flow of air traffic.

Air transportation: Any interstate, overseas, or foreign air transportation or the transportation of mail by aircraft.

Alter: To change or modify.

Alternate airport: An airport at which an aircraft may land if a landing at the intended airport becomes inadvisable.

Appliance: Any instrument, mechanism, equipment, part, apparatus, appurtenance, or accessory, including communications equipment, that is used or intended to be used in operating or controlling an aircraft in flight, is installed in or attached to the aircraft, and is not part of an airframe, engine, or propeller.

Approved: When approved is used to describe a document, manual, or checklist, it means that a regulation requires FAA approval and that the FAA has evaluated and specifically approved the document, manual, or checklist.

Approved data: For the purpose of major repairs and major alterations of aircraft, approved data is used to substantiate major repairs/major alterations, derived from the following:

- Type Certificate Data Sheets
- Supplemental Type Certificates (STC) data, provided that it specifically applies to the item being repaired or altered
- Airworthiness Directives
- Airframe, engine, and propeller manufacturer's FAA-approved maintenance manuals or instructions
- Appliance manufacturer's manuals or instructions, unless specifically not approved by the FAA Administrator or resulting in an alteration to the airframe, engine, and/or propeller
- FAA Form 337, Major Repair or Alteration, when the specified data has been previously approved and will be used as basis for a field approval
- CAA Form 337, dated prior to 10/1/55
- FAA Form 337, used to approve multiple usage only, by the original modifier

- Structural Repair Manuals (SRM), only as a source of approved data for a major repair when it is an FAA-approved document. Data that is contained in an SRM that is not FAA-approved can be used on a case-by-case basis if prior FAA approval is granted for that repair.

- Part Manufacturer Approval (PMA) is considered approved data for the part only, an STC may be required for the actual installation

- Technical Standard Order (TSO) Authorization

- Delegation Option Authorization produced FAA-approved data

- Designated Engineering Representative approved data, only within authorized limitations.

- Designated Alteration Station (DAS) FAA-approved data

- Repair data, under SFAR 36, for the holder's aircraft only

- Foreign bulletins, for use on U.S.-certificated foreign aircraft when approved by the foreign authority

- Data describing an article or appliance used in an alteration that is FAA-approved under a TSO. As such, the conditions and tests required for TSO approval of an article are minimum performance standards. The article may be installed only if further evaluation by the operator (applicant) documents an acceptable installation which may be approved by the FAA Administrator.

- Data in the form of Transport Canada Aviation (TCA) Appliance Type Approval issued by the Minister of Transport Canada for those parts or appliances for which there is no current TSO available. The TCA certificate is included within the installation manual provided with the appliance and includes the date of issuance and environmental qualification statement.

- Data describing a part or appliance used in an alteration that is FAA-approved under a PMA. (An STC may be required to obtain a PMA as a means of assessing airworthiness and/or performance of the part).

Approval for return to service: The approval given by appropriate personnel that enables an aircraft to be returned to service.

Articles: Materials, parts, or appliances.

Automation: A system consisting of software and hardware to perform certain tasks.

Aviation weather service: A service provided by the National Weather Service (NWS) and the FAA which collects and disseminates pertinent weather information for pilots, aircraft operators,

and ATC. Available aviation weather reports and forecasts are displayed at each NWS office and FAA Flight Service Station.

Cargo: Goods carried for revenue purposes, including dangerous goods and materials (dangerous COMAT), as outlined in Hazardous Materials Regulation 49 CFR Part 175.

Category II (CAT II) operation: With respect to the operation of aircraft, it means a straight-in Instrument Landing System (ILS) approach to the runway of an airport under a CAT II ILS approach procedure issued by the FAA Administrator or other appropriate authority.

Category III (CAT III) operation: With respect to the operation of aircraft, it means an ILS approach to, and landing on, the runway of an airport using a CAT III ILS approach procedure issued by the FAA Administrator or other appropriate authority.

14 CFR Part 135 certificate holder: Established 14 CFR Part 135 certificate holders, new entrant carriers, and new entrant transition carriers who hold, or are required to hold, a certificate holder Certificate or Operating Certificate approved under 14 CFR Part 135 for the purpose of conducting operations, including maintenance, preventative maintenance, and alteration of aircraft.

Consumables: Materials to be consumed during certificate holder operations.

Contractor: Services purchased by the company to supplement operations.

Crewmember: A person assigned to perform a duty in an aircraft during flight time.

Cruising altitude: An altitude or flight level maintained during en route-level flight. This is a constant altitude and should not be confused with a cruise clearance.

Data: Information that supports and/or describes the alteration or repair, including the following:

- Drawings, sketches, and/or photographs
- Stress analysis
- Service bulletins
- Engineering orders
- Operating limitations

Dangerous goods: Articles or substances that can pose a risk to safety, health, or property when transported by air and that are classified according to criteria set by the DOT, ICAO, and/or IATA. HAZMAT takes many forms such as in passenger bags, in cargo shipments, and as COMAT.

Departure: The process when an aircraft begins to move under its own power (forward or backward) for purposes of flight.

Directives: Policies, procedures, and instructions that directs how to conduct certain tasks.

Dispatcher: Personnel responsible for authorizing the departure of an aircraft. The dispatcher must ensure, among other things, that the aircraft's crew have all the proper information necessary for their flight and that the aircraft is in proper mechanical condition.

Document: A written description of a system, a method, or a procedure; a written statement of authorization, conditions, or limitations; or a file of information.

Dry lease: Any agreement in which a lessee, which could be a certificate holder, bank, or leasing company, leases an aircraft without flight crewmembers to a certificate holder (the lessee) and in which the lessee maintains operational control.

Duty position: The functional or operating position of a crewmember or aircraft dispatcher. For 14 CFR Part135 operations, duty positions are pilot-in-command, second-in-command, flight attendant, and aircraft dispatcher.

Emergency: When emergency is used to describe a procedure or process, it refers to a nonroutine operation in which certain procedures or actions must be taken to protect the crew, the passengers, or the aircraft from a serious hazard or potential hazard.

Execution directives: Compared with directives, execution directives are more detailed and specific as to how to conduct certain tasks.

Facility: Support system providing the mechanisms for supporting the execution of certain tasks.

Federal Aviation Administration: The government agency responsible for air safety and operation of the air traffic control system.

Fix: A geographical position determined by visual reference to the surface, by reference to one or more radio Navigational Aids, by celestial plotting, or by another navigational device.

Field approval: An approval by an authorized Airworthiness Aviation Safety Inspector of a major repair or major alteration that is accomplished by one or more of the following, as appropriate:

- Examination of data only—one aircraft
- Physical inspection, demonstration, testing, etc.—one aircraft
- Examination of data only—duplication on identical aircraft

Flaps: Control surfaces installed on the trailing edge of a wing and used to increase the amount of lift generated by the wing at slower speeds. Flaps also have the effect of slowing an aircraft during its landing approach.

Flight crewmember: A pilot or flight attendant assigned to duty in an aircraft during flight time.

Flight manual: Any manual authorized by the FAA and required to be carried aboard each aircraft for the guidance of crewmembers when conducting flight operations. A flight manual may be an approved AFM, an approved RFM, or an approved CFM.

Flight Operations: The system that pertains to aircraft movement.

Flight plan: Specified information relating to the intended flight of an aircraft.

Flight time: The time from the moment the aircraft first moves under its own power for the purpose of flight until the moment it comes to rest at the next point of landing.

Function: Appropriate or assigned duties, responsibilities, missions, tasks, powers, or duties of an individual, office, or organization.

General manual: A manual providing guidance for all categories of flight and ground personnel conducting air transportation operations. The general manual must include the duties and responsibilities of each category of employee, adequate policy, direction, and guidance for the safe and efficient performance of the duties assigned to each category of employee. The GOM and GMM are two major segments of a certificate holder's general manual, if required.

Go-around: Procedures for a pilot to abandon the approach to landing.

Holding procedure: A predetermined maneuver that keeps aircraft within a specified airspace while awaiting further clearance from air traffic control. This maneuver is also used during ground operations to keep aircraft within a specified area or at a specified point while awaiting further clearance from air traffic control.

Inspection: The routine performance of inspection tasks at prescribed intervals. The inspection must ensure the airworthiness of an aircraft up to and including its overhaul or life-limits.

Lease: Any agreement by a person (the lessor) to furnish an aircraft to another person (lessee) to be used for compensation or hire purposes.

Liability: The accountability for failure to comply with the certificate holder's policies and procedures.

Mail: This includes airmail, company mail (i.e., parts), or documents to ensure operational integrity of dangerous goods or materials.

Maintenance: Inspection, overhaul, repair, preservation, and the replacement of parts, but excludes preventive maintenance.

Major alteration: An alteration not listed in the aircraft, aircraft engine, or propeller specifications that also fit one or more of the following:

- Might appreciably affect airworthiness by changing weight, balance, structural strength, performance, power plant operation, or flight characteristics.
- Is not done according to accepted practices or cannot be done by elementary operations.

Major repair: A repair that fits one or more of the following:

- Might appreciably affect airworthiness by changing weight, balance, structural strength, performance, power plant operation, or flight characteristics if improperly done.
- Is not done according to accepted practices or cannot be done by elementary operations.

Manual: A collection of the information, policies, procedures, and guidance prepared by a certificate holder to instruct company employees in the performance of their assigned duties.

Material: Substance to be consumed or processed during the certificate holder operations.

Minimum equipment list: A list of aircraft equipment that must be in good working order before an aircraft may legally takeoff with passengers. Repairs to some items not essential to an aircraft's airworthiness may be deferred for limited periods of time approved by the FAA.

Minor alteration: Any alteration that is not classified as a major alteration.

Minor repair: Any repair that is not classified as a major repair.

Missed approach: The segment between the missed-approach point, or point of arrival at decision height, and the missed-approach fix at the prescribed altitude.

Model: An abstraction of a subject that allows one to answer questions about the subject. A representation of a complex, real-world phenomenon within some acceptable and predictable tolerance.

Nonscheduled maintenance: The performance of maintenance tasks when mechanical irregularities occur. These irregularities are categorized as to whether or not they occur during flight time.

Normal: When normal is used to describe a procedure or process, it refers to a routine operation (without malfunctions).

Operations: The movement of aircraft operated under 14 CFR Parts 121, 119, and 135, and the certificate holder's resources and organizational structure that supports or has impact on that activity.

Operator Manufactured Parts (Owner-Produced Parts): Parts manufactured and documented by the operator for use only on that operator's aircraft. The parts must comply with the original type design and cannot be part of a pool or borrowing agreement.

Outsource: Make arrangements with other organizations to provide supplemental resources.

Oversight: An activity that assures compliance with applicable regulations and the operator's manual. Included in this process are adjustments to the operators program as required.

Parts: Any engine, propeller, component, accessory, material, or hardware used on a certificate holder aircraft.

Parts Manufacturer Approval (PMA): Parts produced by manufacturers other than the type certificate holder. These parts must be identical to parts covered under a type certificate, and they must be marked as such. FAA manufacturing inspectors or a manufacturer with parts manufacturer approval authority may approve these parts for use.

Passenger: Revenue and nonrevenue passengers.

Payload: Passengers, cargo, and mail transferred by aircraft.

Performance analysis: The process that defines the differences between what is expected in a task and what is actually being done.

Performance measurement: A description of the desired outcome of a certificate holder element process, used to determine if the desired results of the process were achieved.

Pilot weather report: A report of meteorological phenomena encountered by aircraft in flight.

Policy: A written requirement established by a certificate holder's management that is expected to be complied with by appropriate employee personnel. A policy may be within a procedure or stated separately. A written requirement such as "No flight may depart on a cross-country flight without a spare case of oil" is an example of a policy.

Preflight package: Documents prepared before the flight that contains detailed flight information of route, weather, fuel, airport, etc.

Procedures: A logical progression of actions and/or decisions in a fixed sequence that is prescribed by a certificate holder to achieve a specified objective. In short, a procedure is a step-by-step guidance on how to do something.

Process: Linked activities designed to produce a desired result or end product for a certificate holder.

Quality assurance: An oversight function that assures compliance with the CFR and the certificate holder's policies and procedures.

Ramp: The aircraft parking area at an airport, usually adjacent to a terminal.

Records: Information gathered from the operations of a certificate holder.

Records and reporting systems: The system by which a certificate holder manages the records used to show the aircraft are airworthy. Records and reporting systems that reflect the certificate holder's use of its procedures and ensure the issuance of required reports.

Resources: Assets and services used to support the execution of certain tasks. The resource and services include, but are not limited to, personnel, equipment, financial, information infrastructure and technologies, legal services, telecommunications, and the actual operational facilities.

Resource provision: A provision to plan for, acquire, allocate, and supply the resources to support the execution of certain tasks.

Responsibility: The certificate holder organization, or person within, who owns the process and is answerable for the quality of the process.

Return to service: The action of making an aircraft operational, after approval has been granted by appropriately rated personnel.

Risk: An expression of the probability and impact of an undesired event in terms of event severity and event likelihood.

Risk indicator: A grouping of safety- and/or performance-related data that reflects an area of potential risk that is expected to have sufficient data or justification to calculate a representative value for a particular certificate holder system, subsystem, or element.

Risk management: An iterative management activity dedicated to assuring that risk is identified, documented, eliminated, or controlled within defined program risk parameters.

Route segment: A portion of a route found on each end by a fix or navigation aid.

Safety: An inherent attribute of a certificate holder's properly designed systems, subsystems, and elements.

Safety assessment: A systematic process of collecting, analyzing, and evaluating performance data to determine a certificate holder's exposure to risk.

Safety Risk: An expression of the probability and impact of an undesired event in terms of hazard severity and hazard likelihood.

Scheduled maintenance: The performance of maintenance tasks at prescribed intervals.

Screen: Examine systematically to determine suitability.

Security: Regulatory requirements to ensure the compliance in matters associated with:

- Dangerous goods
- Airport
- Passengers
- Drug and alcohol

Security screening: Questioning passengers during check-in and ascertaining status of luggage. This also includes random check of passengers and bags during the boarding process.

Simulator: A ground-based device used to train pilots that simulates flight scenarios, including emergency situations.

Special tools: Highly specialized tools such as tensiometers, micrometers, and torque wrenches.

Stopway: An area beyond the takeoff runway, no less wider than the runway and centered upon the extended centerline of the runway, able to support the airplane during an aborted takeoff without causing structural damage to the airplane, and designated by the airport authorities for use in decelerating the airplane during an aborted takeoff.

Supplemental Type Certificate (STC): When a major change in type design does not require a new application for a type certificate, a supplemental type certificate is issued. Parts manufactured under a supplemental type certificate are approved under the supplemental type certificate.

System: A group of interrelated processes, which is a composite of people, procedures, materials, tools, equipment, facilities, and software operating in a specific environment to perform a specific task or achieve a specific purpose, support, or mission requirement for a certificate holder.

System safety: The application of special technical and managerial skills to identify, analyze, assess, and control hazards and risks associated with a complete system. System safety is applied throughout a system's entire life cycle to achieve an acceptable level of risk within the constraints of operational effectiveness, time, and cost.

Systems approach: The structured, safety-driven means by which the FAA will certificate and survey elements that are designed to interact predictably within the certificate holder's systems and subsystems.

Systems safety analysis: An activity designed to quantify certificate holder systems through modeling and analysis of their subsystems and assessment of their processes and procedures to explore and understand the interactions of the safety elements.

Technical Standard Order (TSO): A technical standard order is a minimum performance standard for specified articles used on civil aircraft and is issued by the FAA. These articles may be used on a variety of equipment items.

Tool: An instrument used in certificate holder operations to provide functional services such as a hammer and test apparatus, etc.

Training program: A system of instruction including curriculums, facilities, instructors, check airmen, courseware, and instructional delivery methods (including OJT, testing, and checking procedures) is used by a certificate holder ensures personnel are trained to perform assigned duties in accordance with the certificate holder's approved programs.

Training delivery methods: Methodology for conveying information to a student. For example, this may include lectures, demonstrations, audiovisual presentations, programmed and directed self-study workshops, drills, training devices, simulators, aircraft, computer workstations, OJT, etc.

Type Certificate (TC): As defined by 14 CFR 21.41, a type certificate includes the type design, operating limitations, type certificate data sheet, applicable regulations, and any other conditions or limitations prescribed by the FAA Administrator.

Unexpected situation: Interruption to the normal procedures, for example, situations that are of an emergency or abnormal nature. The examples include:

- Engine failure
- Cabin door light
- Pressurization failure
- Medical emergency
- Onboard fire

Wet lease: Any agreement in which a lessor (U.S. certificate holder only) leases an aircraft, with at least one pilot and one flight crewmember, to either a U.S. certificate holder, foreign certificate holder, or a foreign person (the lessee).

Work force: Human resources, including certificate holder employees and contractors, to accomplish assigned operational missions.