DOT/FAA/AR-09/51

Air Traffic Organization
NextGen & Operations Planning
Office of Research and
Technology Development
Washington, DC 20591

Summary Report: Airplane Fuselage Section Tests With Overhead Stowage Bins

Allan Abramowitz
John R. Zvanya

May 2010

Final Report

This document is available to the U.S. public through the National Technical Information Services (NTIS), Springfield, Virginia 22161.

This document is also available from the Federal Aviation Administration William J. Hughes Technical Center at actlibrary.tc.faa.gov.

U.S. Department of Transportation
Federal Aviation Administration

NOTICE

This document is disseminated under the sponsorship of the U.S. Department of Transportation in the interest of information exchange. The United States Government assumes no liability for the contents or use thereof. The United States Government does not endorse products or manufacturers. Trade or manufacturer's names appear herein solely because they are considered essential to the objective of this report. This document does not constitute FAA certification policy. Consult your local FAA aircraft certification office as to its use.

This report is available at the Federal Aviation Administration William J. Hughes Technical Center's Full-Text Technical Reports page: actlibrary.tc.faa.gov in Adobe Acrobat portable document format (PDF).

Technical Report Documentation Page

1. Report No.	2. Government Accession No.	3. Recipient's Catalog No.
DOT/FAA/AR-09/51		

4. Title and Subtitle	5. Report Date
SUMMARY REPORT: AIRPLANE FUSELAGE SECTION TESTS WITH OVERHEAD STOWAGE BINS	May 2010
	6. Performing Organization Code
7. Author(s)	8. Performing Organization Report No.
Allan Abramowitz and John R. Zvanya	
9. Performing Organization Name and Address	10. Work Unit No. (TRAIS)
Federal Aviation Administration William J. Hughes Technical Center Airport and Aircraft Safety Research and Development Division Structures and Materials Atlantic City International Airport, NJ 08405	
	11. Contract or Grant No.
12. Sponsoring Agency Name and Address	13. Type of Report and Period Covered
U.S. Department of Transportation Federal Aviation Administration Air Traffic Organization NextGen & Operations Planning Office of Research and Technology Development Washington, DC 20591	Final Report 1991 - 2002
	14. Sponsoring Agency Code ANM-115

15. Supplementary Notes

16. Abstract

From 1991 to 2000, the Federal Aviation Administration (FAA) conducted vertical and longitudinal and static and dynamic tests of various narrow-body transport airplane fuselage sections, which included different types of in-service overhead stowage bins. Vertical drop impact tests were conducted at the FAA William J. Hughes Technical Center, Atlantic City International Airport, New Jersey. Longitudinal, simulated impact sled tests were conducted at the Transportation Research Center, East Liberty, Ohio. This report summarizes the distribution of loads among the bin support members for both static and dynamic loading conditions, the strengths, and failure modes (if any) of various overhead stowage bins. This information will provide a basis to assess the adequacy of the design standards and regulatory requirements for overhead stowage bins.

17. Key Words	18. Distribution Statement
Crash tests, Vertical impact, Drop test, Overhead stowage bins, Dynamic tests, Acceleration, Airplane	This document is available to the U.S. public through the National Technical Information Service (NTIS), Springfield, Virginia 22161. This document is also available from the Federal Aviation Administration William J. Hughes Technical Center at actlibrary.tc.faa.gov.

19. Security Classif. (of this report)	20. Security Classif. (of this page)	21. No. of Pages	22. Price
Unclassified	Unclassified	43	

Form DOT F 1700.7 (8-72) Reproduction of completed page authorized

ACKNOWLEDGEMENTS

The authors would like to thank Mr. Stephen Soltis, the former Federal Aviation Administration (FAA) Chief Scientist Technical Advisor for Crash Dynamics, for his technical evaluation of this report and Mr. Gary Frings, former FAA Airport and Aircraft Safety R&D Division Crashworthiness Program Manager.

TABLE OF CONTENTS

		Page
EXECUTIVE SUMMARY		xi
1.	INTRODUCTION	1
1.1	Purpose	1
1.2	Background	1
1.3	Presentation/Organization of Tests	1
2.	VERTICAL DROP TEST FACILITY AND TEST CONFIGURATIONS	2
2.1	Dynamic Drop Test Facility	2
2.2	Vertical Test Configuration 1V	3
2.3	Vertical Test Configuration 2V	5
3.	INSTRUMENTATION OF OVERHEAD STOWAGE BINS—VERTICAL TESTS	7
3.1	Hitco Overhead Stowage Bin —Test 1V	7
3.2	Heath Tecna Overhead Stowage Bin Test—1V	8
3.3	Boeing Overhead Stowage Bin—Test 2V	8
3.4	C&D Overhead Stowage Bin—Test 2V	9
4.	VERTICAL FREE-BODY STATIC BIN CALIBRATION	9
4.1	Vertical Free-Body Static Calibration —Test 1V	10
4.2	Vertical Free-Body Static Calibration—Test 2V	11
5.	VERTICAL DYNAMIC TEST RESULTS AND DISCUSSION	12
5.1	Vertical Dynamic Amplification	13
5.2	Vertical Inertial Bin Loads	13
5.3	Comparison of Static and Dynamic Vertical Loading	14
5.3.1	Hitco Overhead Stowage Bin Test 1V—Static and Dynamic Loading	14
5.3.2	Heath Tecna Overhead Stowage Bin Test 1V—Static and Dynamic Loading	14
5.3.3	Boeing Overhead Stowage Bin Test 2V—Static and Dynamic Loading	15
5.3.4	C&D Overhead Stowage Bin Test 2V—Static and Dynamic Loading	16

6. LONGITUDINAL IMPACT SIMULATOR FACILITY AND TEST CONFIGURATIONS 17

6.1 Longitudinal Impact Simulator Facility 17
6.2 Longitudinal Test Configuration 1L 18
6.3 Longitudinal Test Configuration 2L 19

7. INSTRUMENTATION OF OVERHEAD STOWAGE BINS—LONGITUDINAL TESTS 21

7.1 C&D Overhead Stowage Bin—Test 1L 21
7.2 Hexcel Overhead Stowage Bin—Test 1L 22
7.3 Hitco Overhead Stowage Bin—Test 2L 22
7.4 Boeing Overhead Stowage Bin—Test 2L 23

8. LONGITUDINAL FREE-BODY STATIC BIN CALIBRATION 23

8.1 Free-Body Static Bin Calibration—Test 1L 23
8.2 Free-Body Static Calibration—Test 2L 24

9. LONGITUDINAL DYNAMIC TEST RESULTS AND DISCUSSION 25

9.1 Longitudinal Dynamic Amplification 26
9.2 Longitudinal Inertial Bin Loads 27
9.3 Comparison of Static and Dynamic Longitudinal Loading 27

9.3.1 C&D Bin Test 1L—Static and Dynamic Loading 27
9.3.2 Hexcel Bin Test 1L— Static and Dynamic Loading 29
9.3.3 Boeing and Hitco Bin Test 2L—Static and Dynamic Loading 30

10. RESULTS AND CONCLUSIONS 31

10.1 Longitudinal Simulated Impact Sled Tests 31
10.2 Vertical Drop Tests 31
10.3 Overall Results 32

11. REFERENCES 32

LIST OF FIGURES

Figure		Page
1	Dynamic Drop Test Facility	2
2	Schematic of Dynamic Drop Test Facility	3
3	Schematic of Boeing 737-100 Fuselage Test Section—Test 1V	4
4	Boeing 737-100 Fuselage Test Section—Test 1V	5
5	Schematic of Boeing 707 Fuselage Test Section—Test 2V	6
6	Boeing 707 Fuselage Test Section—Test 2V	6
7	Hitco Overhead Stowage Bin—Test 1V	8
8	Heath Tecna Overhead Stowage Bin—Test 1V	8
9	Boeing Overhead Stowage Bin—Test 2V	9
10	C&D Overhead Stowage Bin—Test 2V	9
11	Longitudinal Impact Simulator Facility	17
12	Schematic of Boeing 737-200 Fuselage Test Section—Test 1L	18
13	Boeing 737-200 Fuselage Test Section—Test 1L	19
14	Schematic of the Boeing 707 Fuselage Test Section—Test 2L	20
15	Boeing 707 Fuselage Test Section—Test 2L	20
16	C&D Overhead Stowage Bin—Test 1L	21
17	Hexcel Overhead Stowage Bin—Test 1L	22
18	Hitco Overhead Stowage Bin—Test 2L	22
19	Boeing Overhead Stowage Bin—Test 2L	23

LIST OF TABLES

Table		Page
1	Hitco Bin Vertical Component Influence Coefficients	10
2	Heath Tecna Bin Vertical Component Influence Coefficients	11
3	Boeing Bin Vertical Component Influence Coefficients	12
4	C&D Bin Vertical Component Influence Coefficients	12
5	Vertical Drop Test Bin Accelerations	13
6	Maximum Inertial Bin Accelerations—Vertical Drop Tests	13
7	Hitco Bin Static Loads, Dynamic Loads, and Component Influence Coefficients for Vertical Loading	14
8	Heath Tecna Bin Static Loads, Dynamic Loads, and Component Influence Coefficients for Vertical Loading	15
9	Boeing Bin Static Loads, Dynamic Loads, and Component Influence Coefficients for Vertical Loading	16
10	C&D Bin Static Loads, Dynamic Loads, and Component Influence Coefficients for Vertical Loading	17
11	C&D Overhead Stowage Bin Longitudinal Influence Coefficients	24
12	Hexcel Overhead Stowage Bin Longitudinal Influence Coefficients	24
13	Hitco Overhead Stowage Bin Longitudinal Component Influence Coefficients	25
14	Boeing Overhead Stowage Bin Longitudinal Component Influence Coefficients	25
15	Longitudinal Sled Test Accelerations	26
16	Maximum Longitudinal Sled Test Bin Accelerations	27
17	C&D Bin Static and Dynamic Loads for Longitudinal Loading	28
18	C&D Bin Static and Dynamic Component Influence Coefficients for Longitudinal Loading	29
19	Hexcel Bin Static and Dynamic Loads for Longitudinal Loading	30
20	Hexcel Bin Static and Dynamic Component Influence Coefficients for Longitudinal Loading	30

LIST OF ACRONYMS

ATD	Anthropomorphic test dummy
CFC	Channel Frequency Class
CFR	Code of Federal Regulations
FAA	Federal Aviation Administration
fps	Feet per second
FS	Fuselage station
PSU	Passenger Service Unit
SAE	Society of Automotive Engineers
TRC	Technical Research Center

EXECUTIVE SUMMARY

From 1991 to 2000, the Federal Aviation Administration (FAA) conducted vertical and longitudinal and static and dynamic tests of various narrow-body transport airplane fuselage sections, which included different types of in-service overhead stowage bins. The vertical drop impact tests were conducted at the FAA William J. Hughes Technical Center, Atlantic City International Airport, New Jersey. The longitudinal, simulated impact sled tests were conducted at the Transportation Research Center, East Liberty, Ohio. This report summarizes the distribution of loads among the bin support members for both static and dynamic loading conditions, the strengths, and failure modes (if any) of various overhead stowage bins. This information provides a basis to assess the adequacy of the design standards and regulatory requirements for overhead stowage bins.

A series of longitudinal tests were conducted to compare static and dynamic load responses of overhead stowage bin support members. The results showed that the load distribution of the bin support members (component influence coefficients) were essentially identical at each of the maximum static and dynamic loading conditions. One of the four bins sustained separation of its longitudinal drag strut bracket attachment from the bin during the 6-g sled test. The bin was reinforced and successfully completed a 9-g sled test without damage. The bin sustained substantial damage during a 13.2-g test but remained attached to the fuselage. The longitudinal support bracket of another bin sustained minor bending in the 6-g test. The bracket was replaced and no further damaged was observed in the 9- and 16-g sled tests. All the bins exceeded the current regulation for emergency landing loads by at least 130 percent. Of the two bins that could be analyzed, the static and dynamic influence coefficients were similar. Secondary lateral and vertical loads were generated during the longitudinal sled tests; however, they were relatively small and fell within Title 14 Code of Federal Regulation (CFR) 25.561(c) emergency landing load factors.

Two narrow-body transport fuselage sections with overhead stowage bins were dropped from a height of 14 feet, resulting in a vertical impact velocity of 30 feet per second. This resulted in what was considered a severe, but survivable, impact condition. The drop tests resulted in substantial structural deformation of the fuselage section. The deformation introduced secondary lateral and longitudinal loading to the bin as a result of the reorientation of the bin axis. All bin inertial loads with the exception of the forward direction exceeded current 14 CFR 25.561(c) emergency landing load factors as well as ultimate operational load factors. Due to their robust design, three of the four bins remained attached to the fuselage despite the severe load conditions. The overhead stowage bins experienced dynamic load factors in excess of 15-g vertical (twice the required static value). The static and dynamic vertical component influence coefficients differed by 30 percent. On one bin, the passenger service unit released at the nonhinged side and swung open.

1. INTRODUCTION.

1.1 PURPOSE.

From 1991 to 2000, the Federal Aviation Administration (FAA) conducted vertical and longitudinal and static and dynamic tests of various narrow-body transport airplane fuselage sections, which included different types of in-service overhead stowage bins. The vertical drop impact tests were conducted at the FAA William J. Hughes Technical Center, Atlantic City International Airport, New Jersey. The longitudinal, simulated impact sled tests were conducted at the Transportation Research Center (TRC), East Liberty, Ohio. This report summarizes the distribution of loads among the bin support members for both static and dynamic loading conditions, the strengths, and failure modes (if any) of various overhead stowage bins. This information provides a basis to assess the adequacy of the design standards and regulatory requirements for overhead stowage bins.

1.2 BACKGROUND.

Prior cabin safety research efforts have led to the definition of the survivable crash environment, the development of crash dynamic analytical modeling methodologies, and improved design standards and regulatory requirements for aircraft seats and aircraft interiors [1]. Additional information was needed to determine the impact response characteristics of overhead stowage bins installed onboard transport category airplanes.

To obtain the necessary information, the FAA conducted a series of narrow-body transport airplane fuselage section tests from 1991 to 2000. The four tests were the

- Longitudinal Acceleration Tests of Overhead Luggage Bins in a Transport Airframe Section [2], conducted in 1991
- Vertical Drop Test of a Narrow-Body Fuselage Section With Overhead Stowage Bins and Auxiliary Fuel Tank System on Board [3], conducted in 1993
- Longitudinal Acceleration Tests of Overhead Luggage Bins and Auxiliary Fuel Tank in a Transport Airplane Airframe Section [4-5], conducted in 1997
- Vertical Drop Test of a Narrow-Body Transport Fuselage Section with Overhead Stowage Bins [6], conducted in 2000

Analytical models of the vertical drop test conducted in 2000 are documented in references 7 and 8.

1.3 PRESENTATION/ORGANIZATION OF TESTS.

The results are presented in two groups. The first summarizes the results of the destructive drop tests and the second the nondestructive longitudinal acceleration tests. Chronologically, the longitudinal precedes the corresponding vertical drop tests with the same fuselage section used

for both tests. However, the vertical drop tests are discussed first to emphasize the importance of deformation on the impact response of the fuselage.

2. VERTICAL DROP TEST FACILITY AND TEST CONFIGURATIONS.

2.1 DYNAMIC DROP TEST FACILITY.

The vertical drop impact tests were conducted at the FAA William J. Hughes Technical Center, Atlantic City International Airport, New Jersey. The drop test facility was comprised of two 57-foot vertical steel towers connected at the top by a horizontal platform (figures 1 and 2). A 15- by 36.5-foot wooden platform impact surface, which rests upon steel I-beams and is supported by 12 load cells, was located between the tower legs.

Figure 1. Dynamic Drop Test Facility

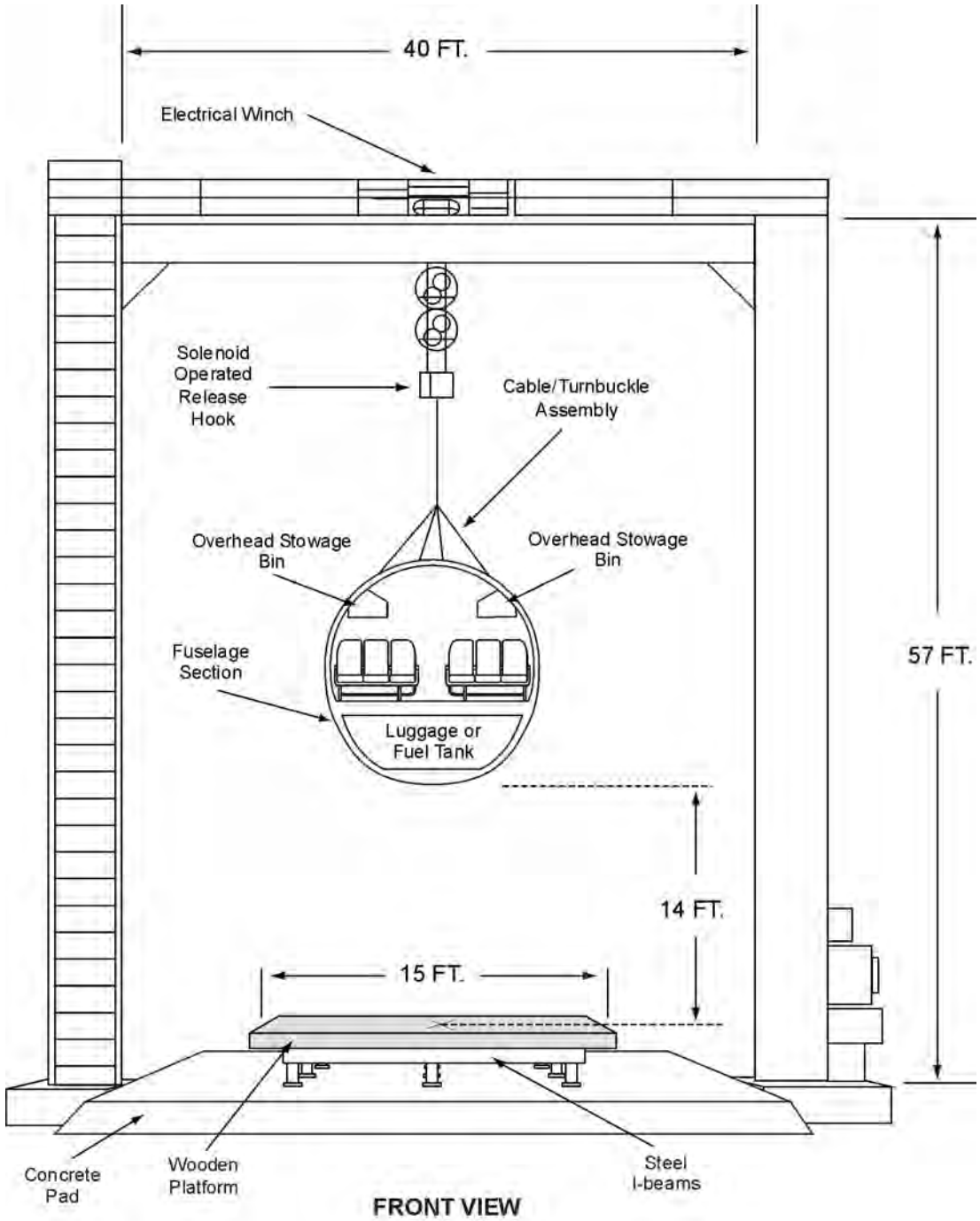

Figure 2. Schematic of Dynamic Drop Test Facility

2.2 VERTICAL TEST CONFIGURATION 1V.

Test 1V was the vertical drop test of a narrow-body transport airplane fuselage section [4-5] conducted in November 2000. The fuselage section was dropped from a height of 14 feet, thereby generating a final velocity at impact of 30 feet per second (fps). The test article was a 10-foot-long fuselage section cut from fuselage station (FS) 380 to FS 500 of a Boeing 737-100

transport airplane (figures 3 and 4). This was the same fuselage section used for the longitudinal Configuration 1L tests conducted earlier. The fuselage section sustained no damage during the Configuration 1L tests. The test section included a below-floor cargo compartment with an access door located on the right (copilot) side (figure 3). The outer floor beams at each end of the test section were reinforced to minimize open-end effects, i.e., to simulate the continuous cabin floor structure that would be seen if an entire aircraft fuselage was tested. Nonstructural interior liners and insulation were removed from the fuselage test section. The test section was equipped with typical 9-g passenger cabin seats, Hitco and Heath Tecna overhead stowage bins, and under floor cargo luggage (figure 4).

The cabin section was configured with six triple cabin seats placed in three rows. The seats, anthropomorphic test dummies (ATD), and mannequins were used to achieve the desired test section weight and provide comparative data to other tests.

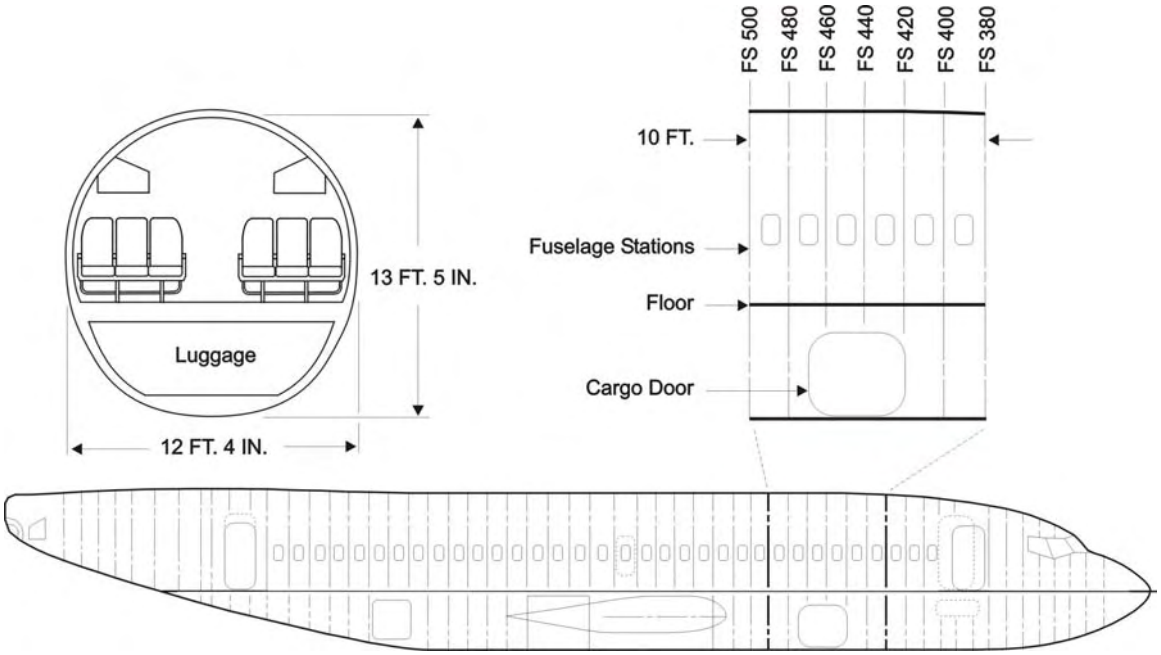

Figure 3. Schematic of Boeing 737-100 Fuselage Test Section—Test 1V

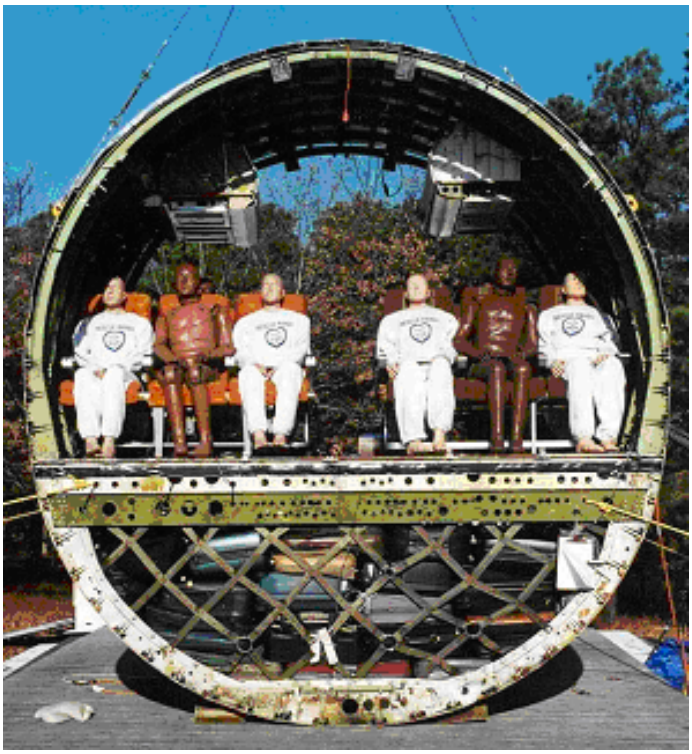

Figure 4. Boeing 737-100 Fuselage Test Section—Test 1V

Two different types of 60-inch (in.) overhead stowage bins were installed in the cabin. A Hitco bin was mounted on the left side between FS 409 and FS 469 and a Heath Tecna bin was mounted on the right side between FS 415 and FS 475. Both bins were loaded with plywood ballast to achieve their placarded maximum weight and center of gravity. Two Passenger Service Units (PSU) were attached under each bin. Overhead stowage bin doors have been documented to open during rough turbulence and crash impacts. Therefore, the bin doors were latched and strapped shut to ensure the bin contents remained inside the bins during the impact to subject the bins to the most adverse load condition. The bins were instrumented with accelerometers and bin support members were instrumented with calibrated strain gage bridges. The cargo area contained luggage, which was evenly distributed by weight. The luggage was held in place by cargo nets and cargo straps. The test configuration also contained four onboard high-speed cameras. The total weight of the test section was 8870 pounds (lb).

2.3 VERTICAL TEST CONFIGURATION 2V.

Test 2V was the vertical drop test of a narrow-body transport fuselage section [3] conducted in October 1993. The fuselage section was dropped from a height of 14 feet, thereby generating a final velocity at impact of 30 fps. The test article was a 10-foot-long tapered fuselage section cut from FS 1120 to FS 1240 (figure 5) of a Boeing 707 transport airplane. This was the same fuselage section used for the longitudinal Configuration 2L tests conducted earlier. The fuselage section sustained no damage during the Configuration 2L tests. The section was equipped with typical 9-g passenger cabin seats, The Boeing Company and C&D Interiors overhead stowage

bins, and a cylindrical fuel tank (figure 6). The outer floor beams at each end of the section were reinforced to minimize open-end effects.

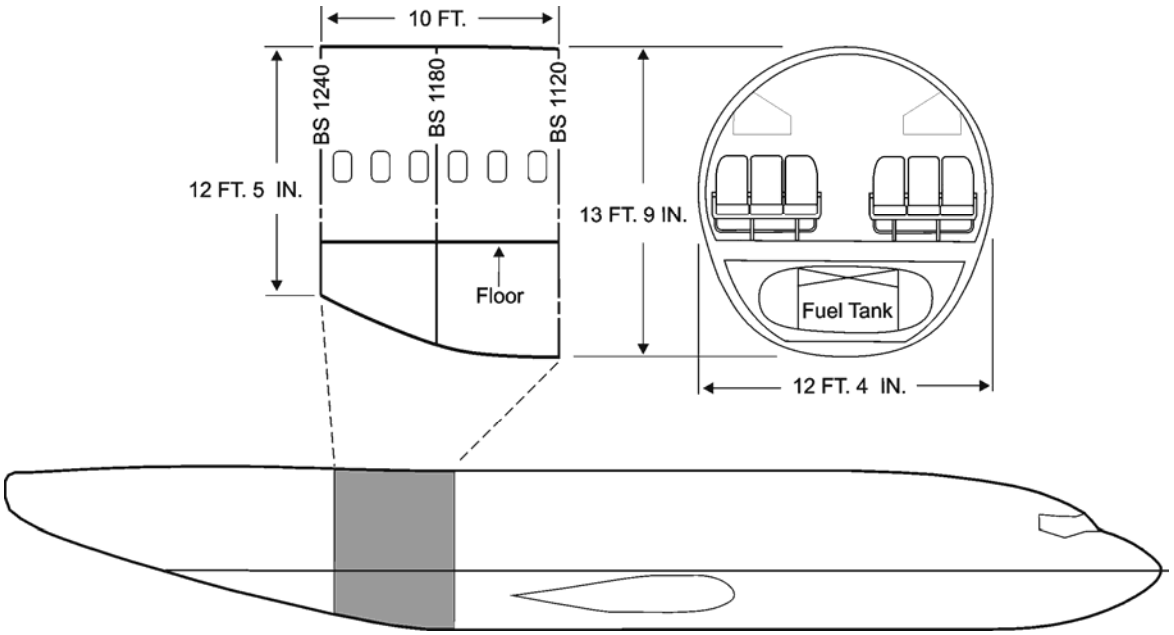

Figure 5. Schematic of Boeing 707 Fuselage Test Section—Test 2V

Figure 6. Boeing 707 Fuselage Test Section—Test 2V

The test configuration contained six floor-mounted, triple-passenger seats (in three rows) with ATDs and mannequins placed in the seats. A 60-in. Boeing overhead stowage bin was mounted on the left side of the fuselage. A 20-in. Boeing overhead stowage bin was mounted in front of the 60-in. bin, and another 20-in. bin was mounted behind the 60-in. bin to account for the potential interaction between adjacent bins and support structure. Two PSUs were attached under and to the bottom of the 60-in. Boeing bin. A 113-in. C&D stowage bin was mounted on the right side of the fuselage. The bin doors were latched and strapped shut to ensure the bin contents remained inside the bins during the impact to subject the bins to the most adverse load condition. The bins were instrumented with accelerometers, and the bin support members were instrumented with calibrated strain gage bridges. The total weight of the test section was 8097 lb.

3. INSTRUMENTATION OF OVERHEAD STOWAGE BINS—VERTICAL TESTS.

Critical bin support members were instrumented to measure and characterize the reaction of the bins. Support members were instrumented with strain gages in a full-Wheatstone bridge configuration and calibrated as load cells. Two types of calibrations were performed: individual support member calibrations and an aircraft installation static bin calibration. The support bin member calibrations were conducted on each support member to determine the sensitivity of each strain gage bridge. The static calibration of the bin installation was conducted to provide data for a free-body, force balance analysis in the longitudinal, lateral, and vertical (x, y, and z) directions. The static bin calibration was used to determine the vertical component influence coefficient (reacted bin support component load divided by the applied vertical load) of each instrumented bin support member. The resulting free-body, force balance component influence coefficients provided the basis for the comparison of the bin reactions under static and dynamic loading.

Accelerometers were mounted on each bin to measure accelerations and characterize the dynamic response of the bins. The bins were instrumented to measure acceleration in the x, y, and z directions.

A free-body load distribution of the bin in the x, y, and z directions was determined by summing the vector components of each instrumented support member. The bin-mounted accelerometers were used to determine the overall inertial loading of the bins in the x, y, and z directions. The overall inertial loads were then used to verify the dynamic free-body load distribution obtained by using the measured impact loads of the instrumented bin support members.

3.1 HITCO OVERHEAD STOWAGE BIN —TEST 1V.

The Hitco bin was used in Test 1V. The bin was secured to the aircraft by 11 instrumented support members (figure 7). Two vertically mounted support members (H1 and H2) were oriented primarily in the vertical direction. The support member (H11) was oriented primarily to react loads in the longitudinal direction. The weight of the bin empty and the PSU was 57 lb. The weight of the bin, two PSUs, and bin contents was 257 lb.

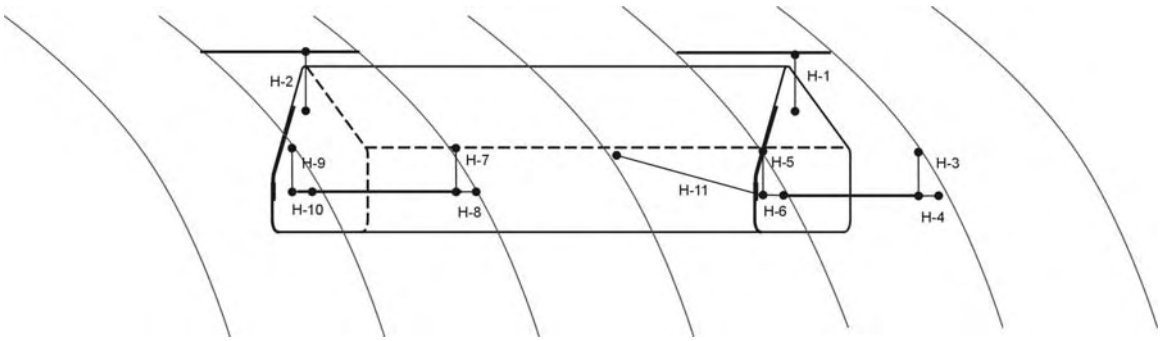

Figure 7. Hitco Overhead Stowage Bin—Test 1V

3.2 HEATH TECNA OVERHEAD STOWAGE BIN TEST—1V.

The Heath Tecna bin was also used in Test 1V. The bin was secured to the aircraft by 11 instrumented support members (figure 8). Two vertically mounted support members (HT1 and HT3) and mating support members (HT2 and HT4) were paired and connected in series. These support members were oriented primarily in the vertical direction. The other support members were attached to the bin, and their mating support members were attached to the fuselage. The weight of the empty bin and PSU was 56 lb. The weight of the bin, PSU, and contents was 176 lb.

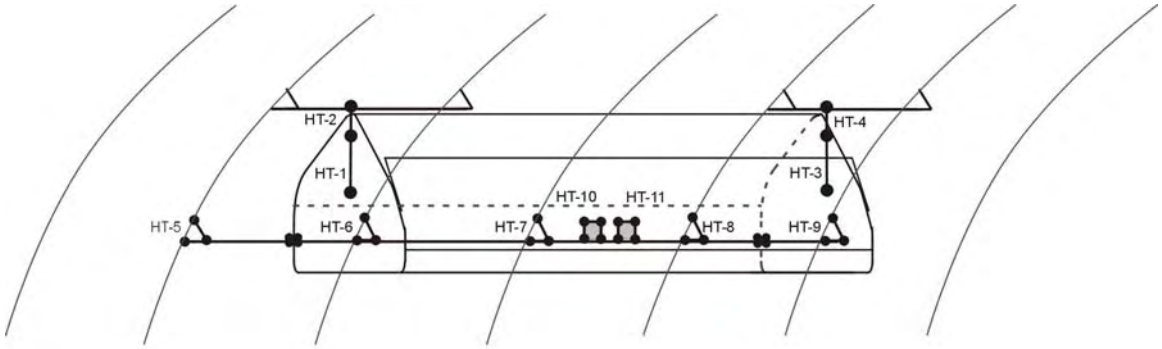

Figure 8. Heath Tecna Overhead Stowage Bin—Test 1V

3.3 BOEING OVERHEAD STOWAGE BIN—TEST 2V.

The Boeing bin was used in Test 2V. There were a total of seven instrumented support members (links), with three different lengths (figure 9). All the support members, with the exception of 31B, were primarily designed to react against vertical and lateral loading while the support member 31B was designed to counteract the longitudinal loading. The weight of the empty bin was 46 lb. The weight of the bin, PSU, and contents was 291 lb.

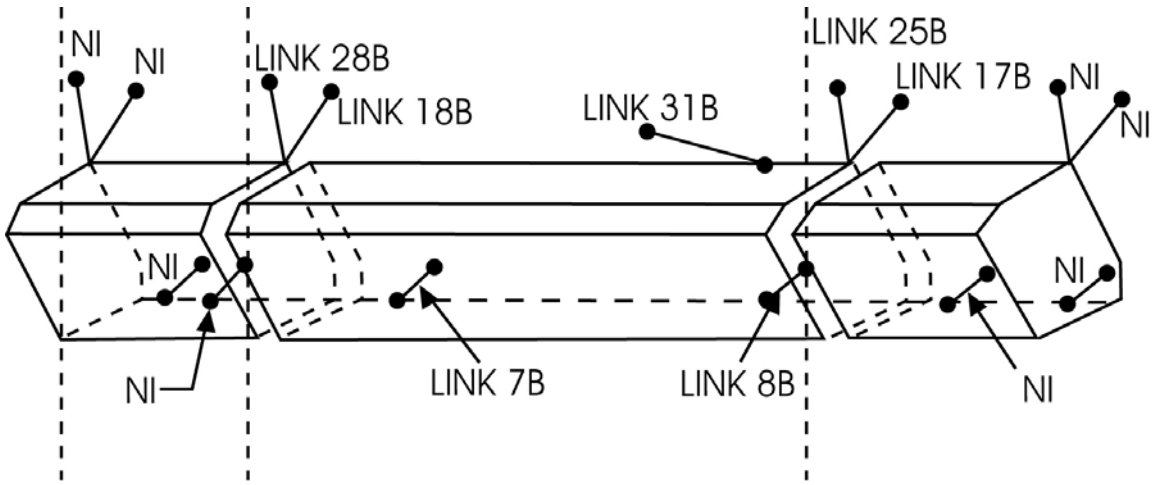

NI = Noninstrumented
Numbered links are instrumented with strain gages

Figure 9. Boeing Overhead Stowage Bin—Test 2V

3.4 C&D OVERHEAD STOWAGE BIN—TEST 2V.

The C&D bin was also used in Test 2V. All six C&D overhead stowage bin support members (brackets) were instrumented and calibrated (figure 10). Three support members attached the upper section of the bin, and three support members attached the lower section of the bin. The weight of the empty bin and mounting brackets was 66 lb, and the weight of the bin, mounting brackets, and contents was 279 lb.

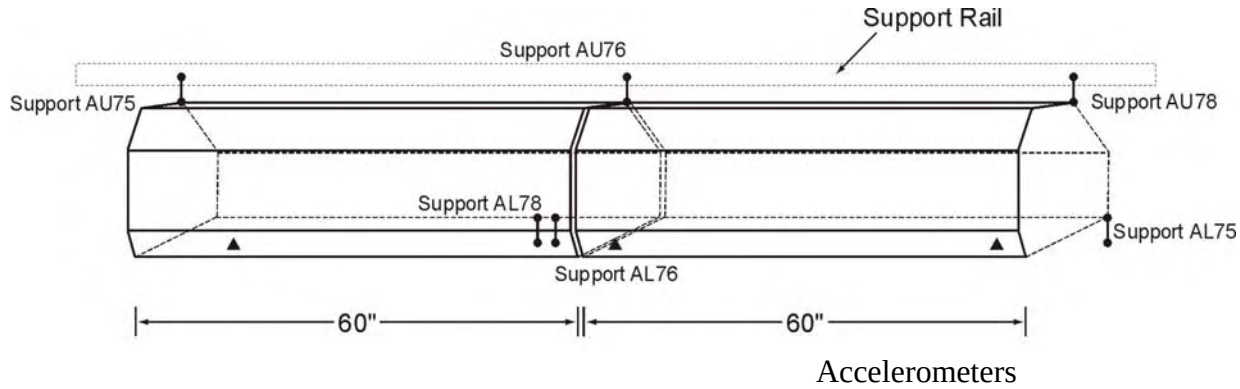

Figure 10. C&D Overhead Stowage Bin—Test 2V

4. VERTICAL FREE-BODY STATIC BIN CALIBRATION.

All free-body static calibrations were conducted using similar procedures. Repeat static calibrations were performed on each bin to determine if the static equilibrium analysis was consistent and to determine the influence coefficient for each support member. For the vertical calibration, each bin was symmetrically loaded with bags of lead shot until a maximum target

load was reached. The bin was then symmetrically unloaded. Support members' reactions, as well as each support member angle, were recorded during loading and unloading.

The vertical component influence coefficient is defined as each bin support member's reaction divided by the vertical load. A value of one for the sum of the static influence coefficients indicates that the static free-body analysis of the bin's support members exactly equaled the applied static load. It is a measure of the quality of the instrumentation system and respective analysis schemes.

4.1 VERTICAL FREE-BODY STATIC CALIBRATION —TEST 1V.

The measured angles of the bin support members recorded from three static calibrations were identical and equal to the initial readings. Pre- and posttest inspection indicated no damage to the bin or bin supports. The averaged results for the vertical component influence coefficients at an applied nominal 5-g static vertical load for the Hitco and Heath Tecna bins are listed in tables 1 and 2, respectively.

Table 1. Hitco Bin Vertical Component Influence Coefficients

Support Member	Static Influence Coefficient
H1	0.358
H2	0.307
H3	0.059
H4	0.000
H5	0.105
H6	-0.002
H7	0.113
H8	0.001
H9	0.064
H10	0.000
H11	-0.005
Total	1.000

Table 2. Heath Tecna Bin Vertical Component Influence Coefficients

Support Member	Static Influence Coefficient
HT1	0.329
HT3	0.332
HT5A	0.064
HT5B	-0.005
HT6A	0.119
HT6B	-0.008
HT7A	0.029
HT7B	-0.002
HT8A	0.074
HT8B	-0.006
HT9A	0.115
HT9B	-0.010
HT10A	-0.012
HT10C	Not applicable
HT11A	-0.021
HT11C	Not applicable
Total	0.998

4.2 VERTICAL FREE-BODY STATIC CALIBRATION—TEST 2V.

The measured angles of the bin support members recorded from the four static calibrations were identical and equal to the initial readings. Pre- and posttest inspection of the Boeing bin indicated no damage to the bin or bin supports. Posttest inspection of the C&D bin indicated a crack in the back area of the bin near the lower supports. The crack might have been attributed to the loading process and that the support members may have impacted an out-of-plane loading on the surface of the back wall structure. The averaged results for the vertical component influence coefficients at an applied nominal 6-g static vertical load for the Boeing and C&D bins are listed in tables 3 and 4, respectively.

Table 3. Boeing Bin Vertical Component Influence Coefficients

Support Member	Static Influence Coefficient
7B	0.010
8B	0.017
17B	0.169
18B	0.159
25B	0.321
28B	0.324
Total	1.000

Table 4. C&D Bin Vertical Component Influence Coefficients

Support Member	Static Influence Coefficient
AU78	0.144
AU76	0.154
AU75	0.100
AL75	0.352
AL78	0.217
AL76	0.033
Total	1.000

5. VERTICAL DYNAMIC TEST RESULTS AND DISCUSSION.

The following terminology will be used when referring to the data. Time is referenced to the moment of impact. The measured maximum vertical load is the maximum value of the sum of the measured bin support members reacted loads at a given moment in time. Inertial bin load is the weight of the bin multiplied by the measured acceleration (averaged where available) of the bin in the corresponding axis. Static equivalent load is the load distribution of each bin support member calculated by multiplying the total measured load by the bin support member influence coefficient. Data was filtered with a Society of Automotive Engineers (SAE) Channel Frequency Class (CFC) 60 - 100 Hz low-pass filter.

Static influence coefficients were generated using unidirectional loading. During the vertical static load calibrations, the fuselage and bins behaved as a rigid body—the bins and fuselage sections experienced the same loads, and there was no observed or measured deformation. However, during the vertical drop tests, the fuselage section reacted as a nonrigid body—the bins and fuselage sections experienced different loads, and there was severe structural deformation of

the fuselages and some of the bins. This deformation (flexing, bending, asymmetrical crushing of the fuselage, etc.) introduced lateral and longitudinal loads into the bin support members, which loaded the bins differently than the unidirectional static load conditions.

5.1 VERTICAL DYNAMIC AMPLIFICATION.

Table 5 shows the effects of dynamic amplification for the vertical drop tests. The data shows that the inertial loading of the bins is less than that of the fuselage. This is attributed to the deformation of the upper fuselage and the bin and bin mounting system.

Table 5. Vertical Drop Test Bin Accelerations

Test No.	Sidewall Acceleration (g)		Left-Side Acceleration (g)	Right-Side Acceleration (g)
	Left Side	Right Side		
Test 1V	40	35	Hitco Bin: 15	Heath Tecna Bin: 18
Test 2V	39	47	Boeing Bin: 26	C&D Bin: *12

*Last valid reading prior to bin failure.

5.2 VERTICAL INERTIAL BIN LOADS.

The current certification requirements listed in 14 CFR 25.561(b)(3) are upward 3.0 g, forward 9.0 g, lateral ±3.0 g, downward 6.0 g, and rearward 1.5 g. Additional operational load factors imposed from service flight conditions are 7.3 g downward and 3.6 g upward. The vertical test results shown in table 6 indicates that most of the induced vertical, lateral, and longitudinal inertial loads exceeded current load requirements (in bold).

Table 6. Maximum Inertial Bin Accelerations—Vertical Drop Tests

	Maximum Inertial Load (g)		
	x direction	y direction	z direction
Test 1V			
Hitco Bin	±7/**-4**	**±11/-14**	**±6/-15**
Heath Tecna Bin	±7/**-6**	**±12/-7**	±2/**-17**
Test 2V			
Boeing Bin	**±16/-20**	±2/**-20**	**±19/-26**
C&D Bin	±7/**-8***	**±5/-6***	**±-12***

*Bin failed after this reading. Bold indicates values exceeded current certification requirements.

5.3 COMPARISON OF STATIC AND DYNAMIC VERTICAL LOADING.

5.3.1 Hitco Overhead Stowage Bin Test 1V—Static and Dynamic Loading.

The comparison of static and dynamic loads for each support member was made at the measured 6 g and measured maximum total bin load in the vertical direction (table 7). The corresponding static and dynamic component influence coefficients are also shown in table 7. The overall difference between the static and dynamic component influence coefficients of the primary vertical supports (H1 and H2) averaged approximately 35 percent (6 g and 15 g). The results show that this bin was able to support, without failure, measured dynamic loads of approximately -15 g vertical. The inertial data listed in table 6 shows that the bin was able to sustain loads of +6/-15 g vertical, 11/-14 g lateral, and +7/-4 g longitudinal. A failure analysis on the support members was conducted prior to the test. Support members H1 and H2 were identified as having the greatest probability of failure. The maximum dynamic loads reacted by supports H1 and H2 were approximately 30% of failure load.

Table 7. Hitco Bin Static Loads, Dynamic Loads, and Component Influence Coefficients for Vertical Loading

Support Member	Static Equivalent Vertical (z) Load (lb) 6 g	Measured Dynamic Vertical (z) Load (lb) 6 g @ 16 msec	Static Equivalent Vertical (z) Load (lb) 15 g	Maximum Measured Dynamic Vertical (z) Load (lb) 15 g @ 113 msec	Vertical Component Influence Coefficient		
					Static	Dynamic 6 g @ 16 msec	Dynamic 15 g @ 113 msec
H1	552	313	1291	892	0.358	0.203	0.247
H2	473	321	1107	1130	0.307	0.208	0.313
H3	91	110	213	172	0.059	0.071	0.048
H4	0	6	0	29	0.000	0.004	0.008
H5	163	257	382	464	0.106	0.167	0.129
H6	-3	-4	-7	-11	-0.002	-0.002	-0.003
H7	174	338	408	612	0.113	0.219	0.170
H8	2	-1	4	-12	0.001	0.000	-0.003
H9	99	174	231	293	0.064	0.113	0.081
H10	0	9	0	34	0.000	0.006	0.009
H11	-8	17	-18	3	-0.005	0.011	0.001
Total load	-------	1541	------	3607	-------	-------	-------

5.3.2 Heath Tecna Overhead Stowage Bin Test 1V—Static and Dynamic Loading.

The comparison of static and dynamic vertical loading for each support was made at the measured 6 g and measured maximum total bin load in the vertical direction (table 8). The corresponding static and dynamic influence coefficients are also shown in table 8. The overall difference between the static and dynamic influence coefficients of the primary vertical supports (HT1 to HT4) averaged approximately 32 percent (6 g and 15 g). The results show that this bin

was able to support, without failure, measured dynamic loads of approximately -15 g vertical. The inertial data listed in table 6 shows that the bin was able to sustain loads of +2/-17 g vertical, +12/-7 g lateral, and +7/-6 g longitudinal. A failure analysis on the support members having the greatest probability of failure was conducted prior to the test (HT1 and HT3). Maximum dynamic loading of supports HT1 through HT4 were approximately 70% of failure load.

Table 8. Heath Tecna Bin Static Loads, Dynamic Loads, and Component Influence Coefficients for Vertical Loading

Support Member	Static Equivalent Vertical (z) Load (lb) 6 g	Measured Dynamic Vertical (z) Load (lb) 6 g @ 15 msec	Static Equivalent Vertical (z) Load (lb) 15.3 g	Maximum Measured Dynamic Vertical (z) Load (lb) 15.3 g @ 102 msec	Vertical Component Influence Coefficient		
					Static	Dynamic 6 g @ 15 msec	Dynamic 15.3 g @ 102 msec
HT1	353	223	893	1151	0.332	0.210	0.428
HT3	349	249	885	1279	0.329	0.234	0.475
HT5A	68	37	172	34	0.064	0.035	0.013
HT5B	-5	20	-13	-4	-0.005	0.019	-0.001
HT6A	126	212	320	67	0.119	0.200	0.025
HT6B	-8	-4	-22	-4	-0.008	-0.004	-0.002
HT7A	31	26	78	55	0.029	0.025	0.020
HT7B	-2	-7	-5	-6	-0.002	-0.007	-0.002
HT8A	79	146	199	103	0.074	0.137	0.038
HT8B	-6	-7	-16	-9	-0.006	-0.007	-0.003
HT9A	122	220	309	108	0.115	0.207	0.040
HT9B	-11	-36	-27	-29	-0.010	-0.034	-0.011
HT10A	-13	3	-32	-14	-0.012	0.003	-0.005
HT11A	-22	-21	-57	-41	-.021	-0.019	-0.015
Total load	-------	1062	-------	2691	-------	-------	-------

5.3.3 Boeing Overhead Stowage Bin Test 2V—Static and Dynamic Loading.

The comparison of static and dynamic vertical loading for each support was made at the measured 6 g and measured maximum total bin load in the vertical direction (table 9). The corresponding static and dynamic influence coefficients are also shown in table 9. The overall difference between the static and dynamic influence coefficients of the primary vertical supports (25B and 28B) averaged approximately 13 percent. The results show that this bin was able to support, without failure, measured dynamic loads of approximately -15 g vertical. The inertial data listed in table 6 shows that the bin was able to sustain loads of +19/-26 g vertical, +16/-20 g lateral, and +15/-20 g longitudinal. The PSU that was attached to the bin released at the nonhinged side and swung open.

Table 9. Boeing Bin Static Loads, Dynamic Loads, and Component Influence Coefficients for Vertical Loading

Support Member	Static Equivalent Vertical (z) Load (lb) 6 g	Measured Dynamic Vertical (z) Load (lb) 6 g @ 20 msec	Static Equivalent Vertical (z) Load (lb) 15.3 g	Maximum Measured Dynamic Vertical (z) Load (lb) 14.7 g @ 100 msec	Vertical Component Influence Coefficient		
					Static	Dynamic 6 g @ 20 msec	Dynamic 14.7 g @ 100 msec
7B	17	189	46	15	0.010	0.109	0.003
8B	29	-5	78	-481	0.017	-0.003	-0.105
17B	293	247	773	1284	0.169	0.143	0.281
18B	275	182	727	1321	0.159	0.105	0.289
25B	556	588	1469	1093	0.321	0.340	0.239
28B	561	529	1482	1342	0.324	0.306	0.293
Total load	-------	1731	-------	4575	-------	-------	-------

5.3.4 C&D Overhead Stowage Bin Test 2V—Static and Dynamic Loading.

The comparison of static and dynamic vertical loading for each support was made at the 6 g bin load in the vertical direction (table 10). The corresponding static and dynamic influence coefficients are shown in table 10. The C&D bin and mounting rail remained intact during the initial impact period, but experienced a variety of fracture modes during the primary impact period [2]. A section of the mounting rail that the bin aft attachment bracket was mounted to separated from the rail and allowed the bin to pivot around the lower support brackets. Simultaneously, the bottom of the bin separated from the front and sides of the bin, and the strapping used to keep the door closed failed. The contents fell out of the bottom of the bin onto the ATDs occupying the seats below the bin. The C&D bin and installation failed at approximately 84 msec after fuselage impact. The results show that the bin was able to sustain measured vertical loads of approximately 2100 lb (7 g). The inertial data listed in table 6 shows that the bin was able to sustain loads of 12 g vertical, 10 g lateral, and 7 g longitudinal. During the 6-g impact level, the dynamic influence coefficients have little comparability to the static influence coefficients. However, this bin had highly statically indeterminate complex supports that did not allow a simple bin instrumentation system that would facilitate static-dynamic comparisons.

Table 10. C&D Bin Static Loads, Dynamic Loads, and Component Influence Coefficients for Vertical Loading

Support Member	Static Equivalent Vertical (z) Load (lb) 6 g @ 28 msec	Dynamic Vertical (z) Load (lb) 6 g @ 28 msec	Vertical Component Influence Coefficient 6 g @ 28 msec	
			Static	Dynamic
AU78	302	500	0.181	0.300
AU76	245	661	0.147	0.396
AU75	160	257	0.096	0.154
AL75	562	264	0.337	0.158
AL78	347	28	0.208	0.017
AL76	52	-41	0.031	-0.025
Total load	-------	1669	-------	-------

6. LONGITUDINAL IMPACT SIMULATOR FACILITY AND TEST CONFIGURATIONS.

6.1 LONGITUDINAL IMPACT SIMULATOR FACILITY.

The longitudinal sled tests were conducted at the TRC Laboratory Impact Simulator Facility in East Liberty, Ohio (figure 11). This facility uses a 24-in.-diameter HYGE™ crash simulation system to replicate the deceleration conditions of an impact in a nondestructive manor. The test article was attached to a steel frame that was mounted on a test sled and accelerated down a test rail. The steel fixture was fabricated to minimize any effect on load paths between the fuselage and the overhead stowage bins, the auxiliary fuel tank (when installed), and the fuselage floor.

Figure 11. Longitudinal Impact Simulator Facility

6.2 LONGITUDINAL TEST CONFIGURATION 1L.

Test series 1L was the longitudinal simulated impact test of a narrow-body transport airplane section [4 and 5] conducted in November 1997. The test article was a 10-foot-long fuselage section cut from FS 400 to FS 500A (figure 12) of a Boeing 737-200 transport airplane. C&D and Hexcel overhead stowage bins and a conformable auxiliary fuel tank (figure 13) were mounted in the fuselage section. A 120-in.-long C&D stowage bin was mounted on the left (pilot) side of the cabin between FS 400 and FS 500A. A 60-in.-long Hexcel stowage bin was mounted on the right (copilot) side of the cabin between FS 420 and FS 480. The bins were instrumented with accelerometers, and the bin support members were instrumented with calibrated strain gage bridges. The total weight of the test section, including the conformable fuel tank filled with water, was 6404 lb and without the tank and water 2511 lb. Three tests were conducted at nominal 6-, 9-, and 14-g acceleration levels. The tests are designated 1L-6, 1L-9, and 1L-14.

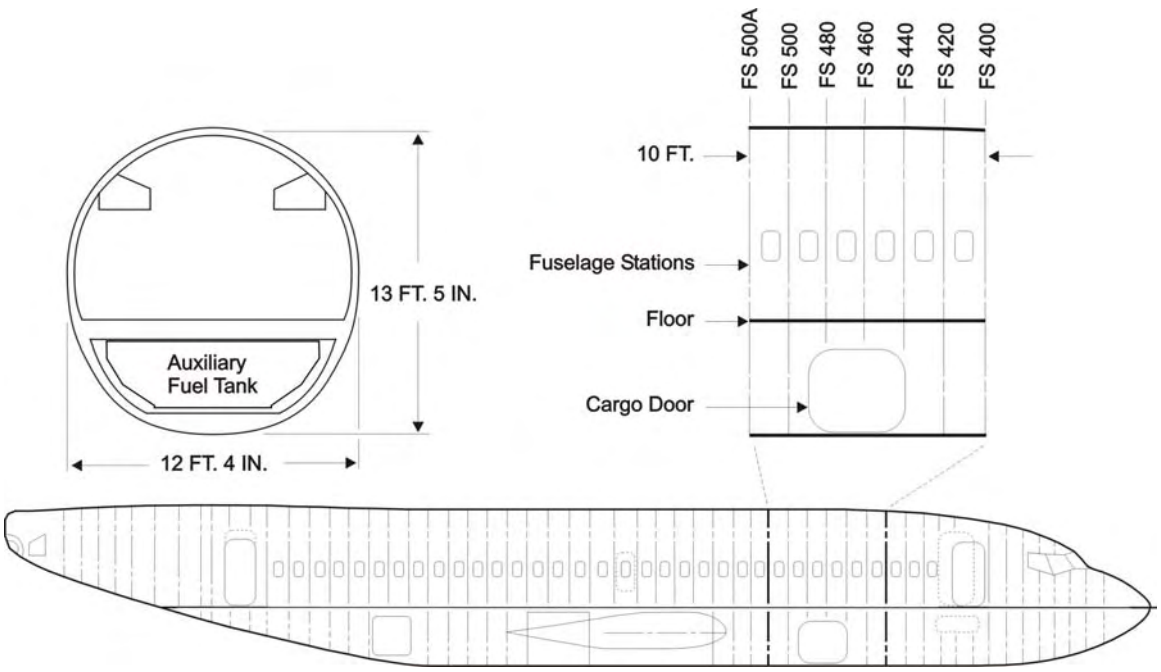

Figure 12. Schematic of Boeing 737-200 Fuselage Test Section—Test 1L

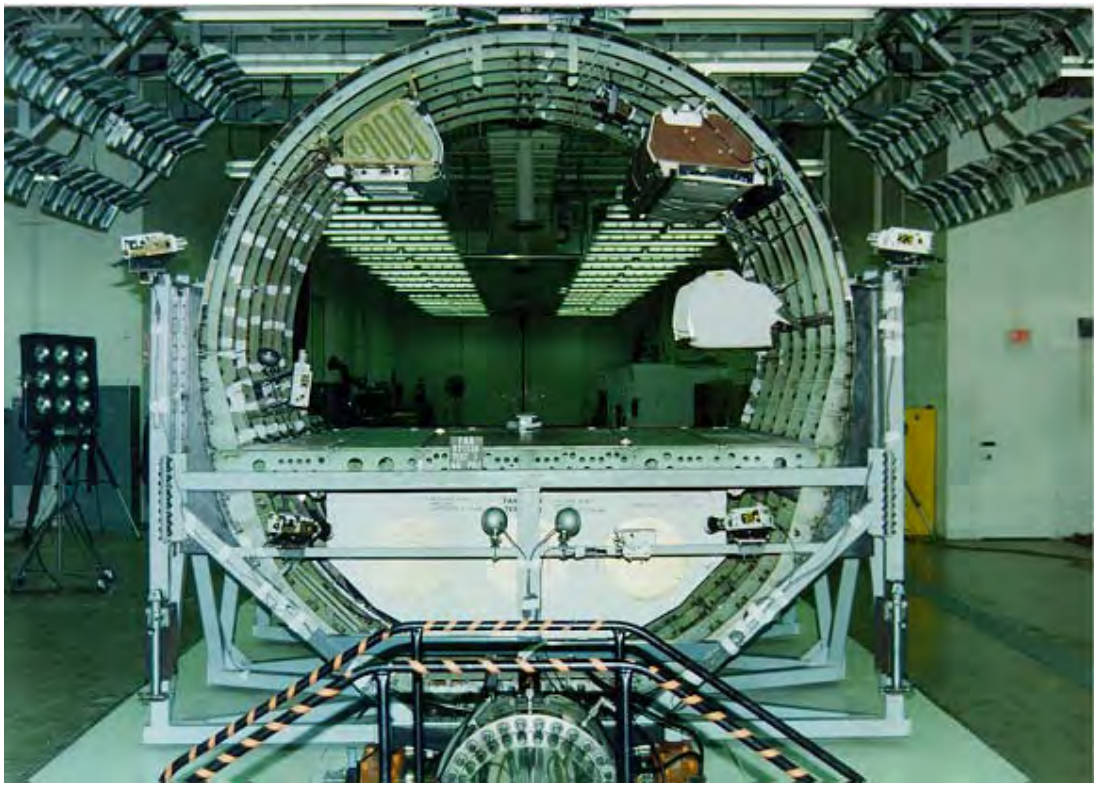

Figure 13. Boeing 737-200 Fuselage Test Section—Test 1L

6.3 LONGITUDINAL TEST CONFIGURATION 2L.

Test series 2L was the longitudinal simulated impact test of a narrow-body transport airplane fuselage section [1] conducted in January 1991. The test article was a 10-foot-long tapered fuselage section cut from FS 1120 to FS 1240 (figure 14) of a Boeing 707 transport airplane. The cabin area was configured with two rows of triple-passenger seats and overhead stowage bins. A 60-in. Hitco overhead storage bin was mounted on the right side between FS 1137 and FS 1197, and a 20-in./60-in./20-in. series of Boeing overhead storage bins were mounted on the left side between FS 1137 and FS 1237 (figure 15). The bins were instrumented with accelerometers, and the bin support members were instrumented with calibrated strain gage bridges. A double-wall cylindrical auxiliary fuel tank was suspended from cabin floor beams in the cargo area. The total weight of the test section was 3496 lb. Three tests were conducted at nominal 6-, 9-, and 14-g acceleration levels. The tests were designated 2L-6, 2L-9, and 2L-14.

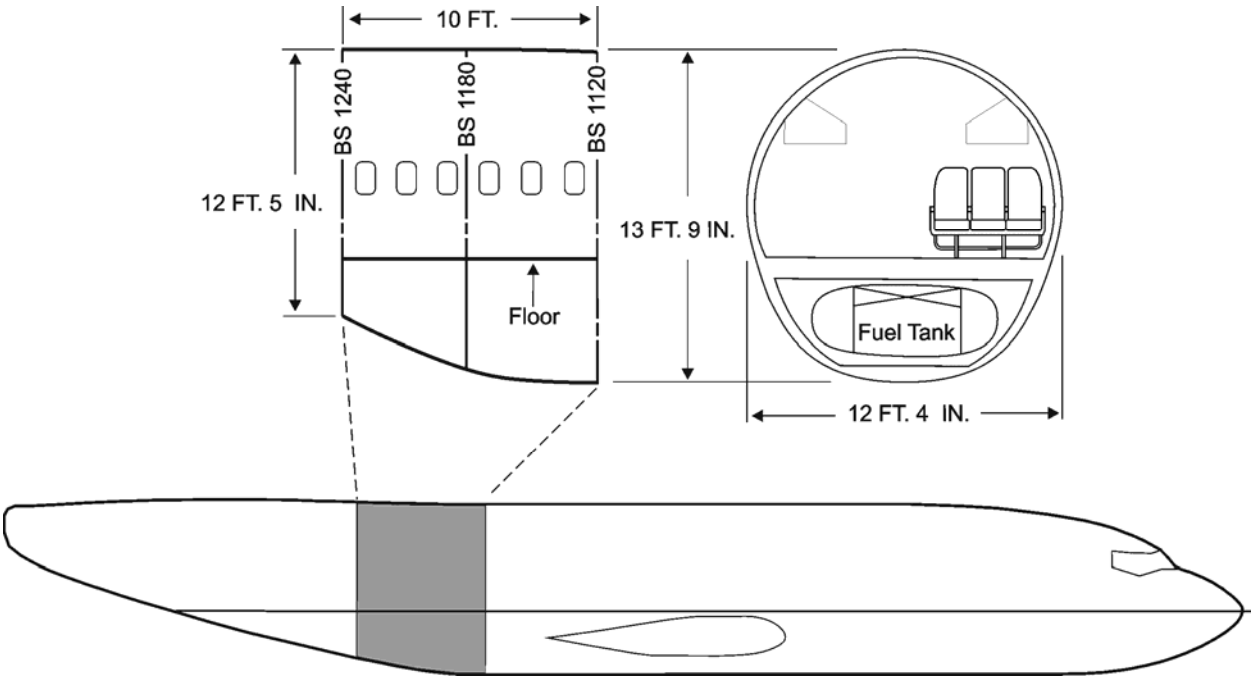

Figure 14. Schematic of the Boeing 707 Fuselage Test Section—Test 2L

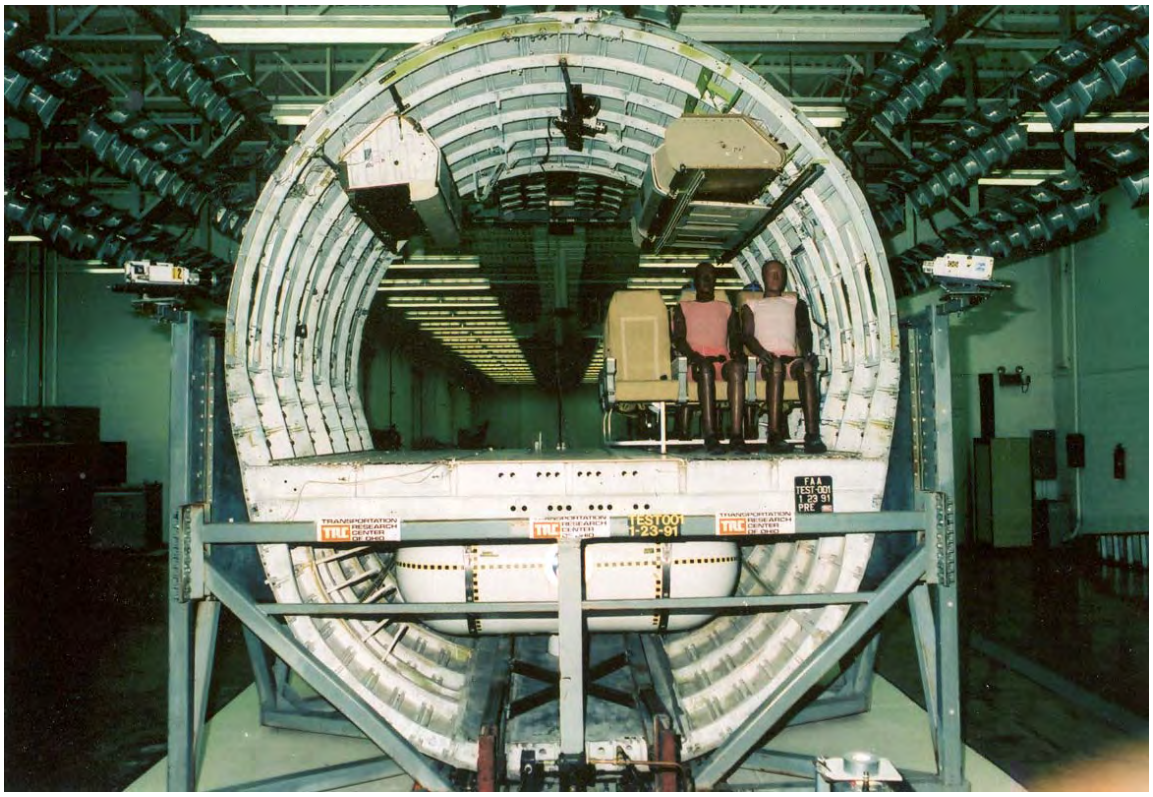

Figure 15. Boeing 707 Fuselage Test Section—Test 2L

7. INSTRUMENTATION OF OVERHEAD STOWAGE BINS—LONGITUDINAL TESTS.

Critical bin support members were instrumented to measure and characterize the reaction of the bins. Support members were instrumented with strain gages in a full-Wheatstone bridge configuration and calibrated as load cells. Two types of calibrations were performed: individual support member calibrations and an aircraft installation static bin calibration. The support bin member calibrations were conducted on each support member to determine the sensitivity of each strain gage bridge. The static calibration of the bin installation was conducted to provide data for a free-body, force balance analysis in the longitudinal, lateral, and vertical (x, y, and z) directions. The static bin calibration was used to determine the longitudinal component influence coefficient (reacted bin support component load divided by the applied longitudinal load) of each instrumented bin support member. The resulting free-body, force balance component influence coefficients provided the basis for the comparison of the bin reactions under static and dynamic loading.

Accelerometers were mounted on each bin to measure accelerations and characterize the dynamic response of the bins. The bins were instrumented to measure acceleration in the x, y, and z directions.

A free-body load distribution of the bin in the x, y, and z directions was determined by summing the vector components of each instrumented support member. The bin-mounted accelerometers were used to determine the overall inertial loading of the bins in the x, y, and z directions. The overall inertial loads were then used to verify the dynamic free-body load distribution obtained by using the measured impact loads of the instrumented bin support members.

7.1 C&D OVERHEAD STOWAGE BIN—TEST 1L.

The C&D bin was used in Test 1L. All six C&D overhead stowage bin support members were instrumented and calibrated (figure 16). Three support members attached the upper section of the bin, and three support members attached the lower section of the bin. The weight of the empty bin and PSU was 92 lb, and the weight of the bin, PSU, and contents was 302 lb.

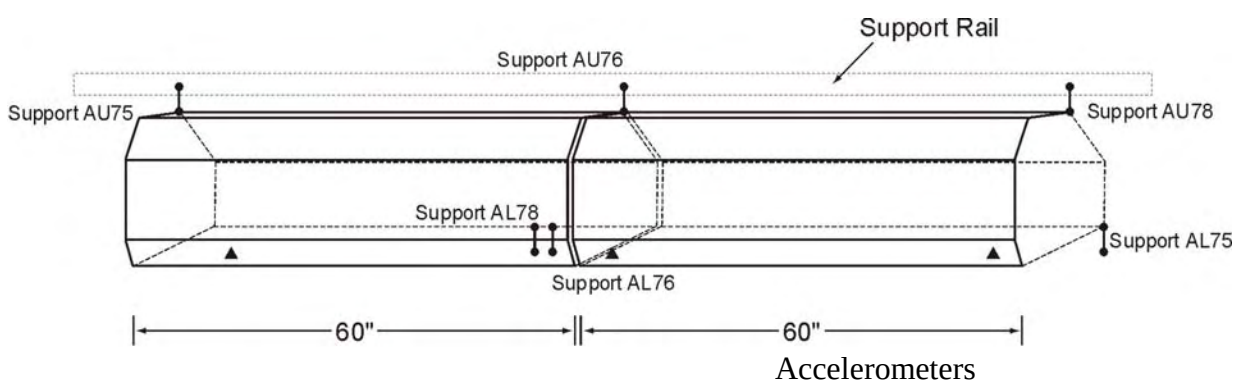

Figure 16. C&D Overhead Stowage Bin—Test 1L

7.2 HEXCEL OVERHEAD STOWAGE BIN—TEST 1L.

The Hexcel bin was used in Test 1L. The Hexcel bin was held in place by 11 support members (figure 17). Two of these support members, labeled 5 and 6, were intercostals attached to the outboard side of the bin and to a flange that was attached to the fuselage frame sections. They primarily carried loads in the longitudinal direction. The other support members were mounted directly to the fuselage frame sections and were connected to the bin through a support rail that ran longitudinally along the length of the bin. The weight of the empty bin was 53 lb, and the weight of the bin and contents was 173 lb.

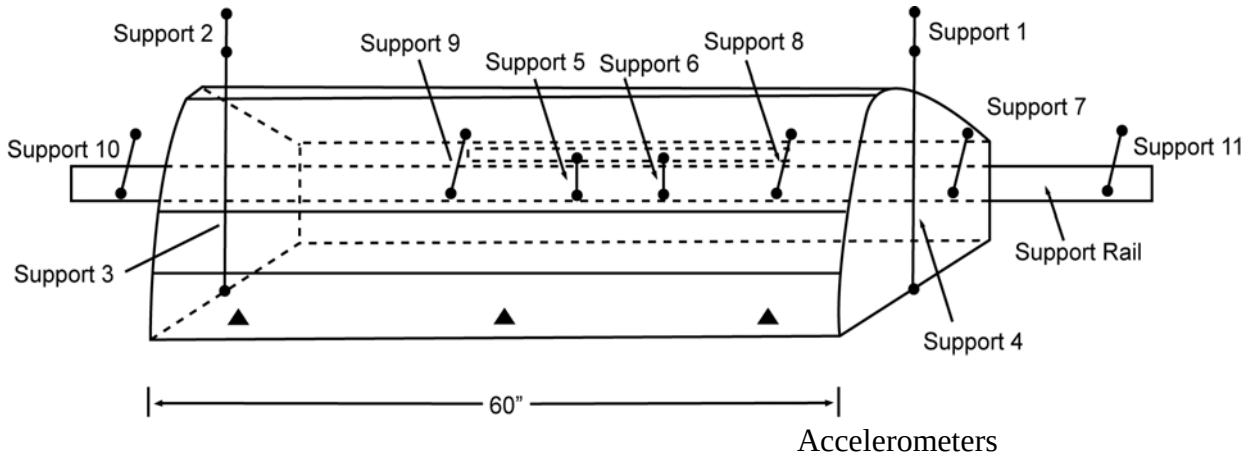

Figure 17. Hexcel Overhead Stowage Bin—Test 1L

7.3 HITCO OVERHEAD STOWAGE BIN—TEST 2L.

The Hitco bin was used in Test 2L. The bin was secured to the aircraft by 11 instrumented support members (figure 18). Two vertically mounted support members (H1 and H2) were oriented primarily in the vertical direction. The support member (H11) was oriented primarily to react loads in the longitudinal direction. The weight of the empty bin and PSU was 57 lb. The weight of the bin and bin contents was 250 lb.

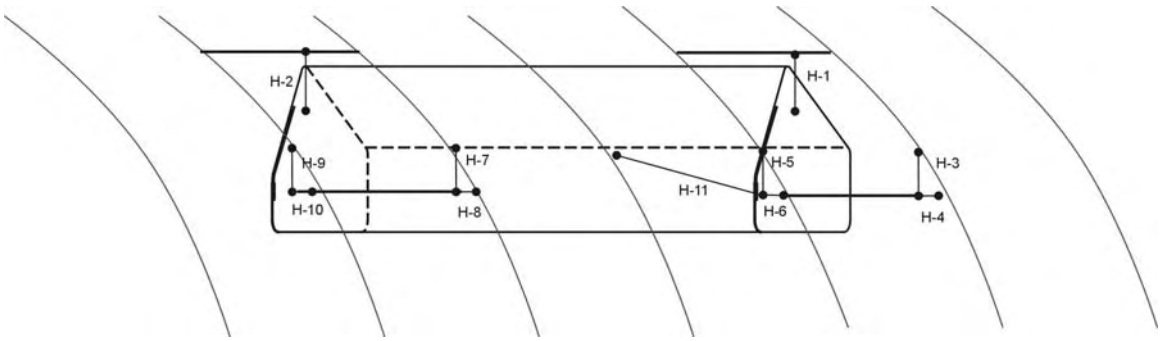

Figure 18. Hitco Overhead Stowage Bin—Test 2L

7.4 BOEING OVERHEAD STOWAGE BIN—TEST 2L.

The Boeing bin was used in Test 2L. There were a total of seven instrumented support members, with three different lengths (figure 19). All the support members, with the exception of 32B, were primarily designed to react against vertical and lateral loading, while support member 32B was designed to counteract the longitudinal loading. The weight of the empty bin was 46 lb. The weight of the bin, PSU, and contents was 250 lb.

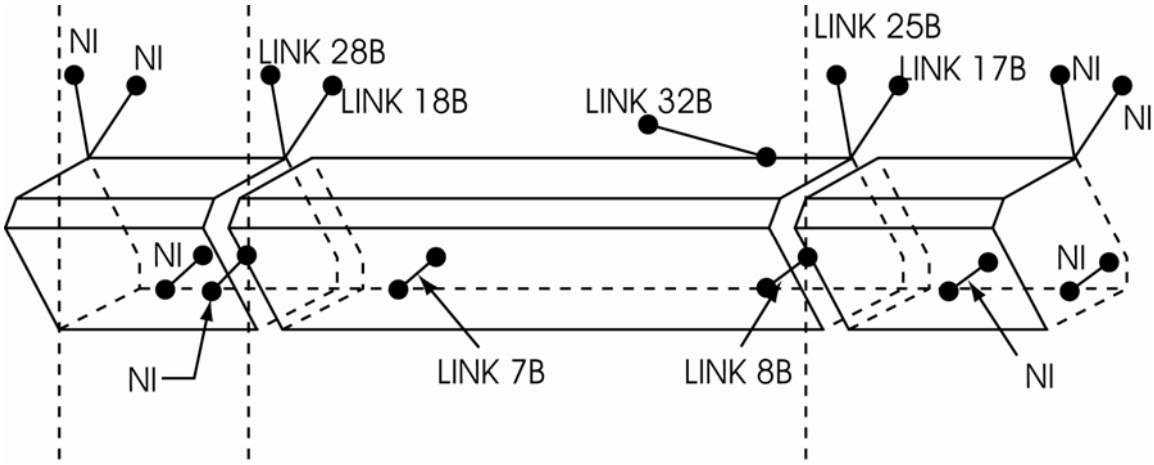

NI = Noninstrumented
Numbered links are instrumented with strain gages

Figure 19. Boeing Overhead Stowage Bin—Test 2L

8. LONGITUDINAL FREE-BODY STATIC BIN CALIBRATION.

All free-body static calibrations were conducted using similar procedures. Repeat static calibrations were performed on each bin to determine if the static equilibrium analysis was consistent and to determine the influence coefficient for each support member. In the longitudinal calibration, each bin was pulled in the longitudinal direction at a force equal to six times its weight and contents (i.e., a 6-g static test), and then unloaded. Support members reactions were recorded during loading and unloading.

The longitudinal component influence coefficient is defined as each bin support member's reaction in the corresponding direction divided by the applied corresponding directional load. A value of one for the sum of the static influence coefficients indicates that the static free-body analysis of the bin's support members exactly equaled the applied static load. It is a measure of the quality of the instrumentation system and respective analysis schemes.

8.1 FREE-BODY STATIC BIN CALIBRATION—TEST 1L.

Pre- and posttest inspections indicated no damage to the bin or bin supports after each calibration test. The averaged results for the longitudinal component influence coefficients at an applied nominal 6-g static loading for the C&D and Hexcel bins are listed in tables 11 and 12, respectively. The free-body static calibration of the Hexcel bin [1] and the resolved longitudinal

components did not equal one. Therefore, two influence coefficients are listed; the first is referenced to the applied load and the second to the measured load in table 12.

Table 11. C&D Overhead Stowage Bin Longitudinal Influence Coefficients

Support Member	Static Influence Coefficient
AU75	0.247
AU76	0.335
AU78	0.025
AL78	0.073
AL76	0.186
AL75	0.129
Total	0.995

Table 12. Hexcel Overhead Stowage Bin Longitudinal Influence Coefficients

Support Member	Static Influence Coefficient	
	Using Applied Load	Using Measured Load
5	0.478	0.532
6	0.421	0.468
Total	0.899	1.000

Note, only bin support members 5 and 6 were instrumented to react to longitudinal loads.

8.2 FREE-BODY STATIC CALIBRATION—TEST 2L.

Pre- and posttest inspections indicated no damage to the bin or bin supports. The averaged results for the vertical component influence coefficients at an applied nominal 6-g static longitudinal load for the Hitco and Boeing bins are listed in tables 13 and 14, respectively. The free-body static calibration of the Hitco bin [4] and the resolved longitudinal components did not equal one. Therefore, two influence coefficients are listed; the first is referenced to the applied load and the second to the measured load in table 13.

Table 13. Hitco Overhead Stowage Bin Longitudinal Component Influence Coefficients

Support Member	Static Influence Coefficient	
	Using Applied Load	Using Measured Load
T14HS	0.901	1.000
Total	0.901	1.000

Note, in Test 2L, T14HS = H-11 in figure 18. T14HS (H-11) is the only bin support member instrumented to react to a longitudinal load.

Table 14. Boeing Overhead Stowage Bin Longitudinal Component Influence Coefficients

Support Member	Static Influence Coefficient
T1BS	-0.005
T2BS	0.042
T3BS	0.129
T4BS	-0.205
T5BS	-0.037
T6BS	0.013
T13BS	-0.001
T14BS	-0.076
T15BS	-0.140
T16BS	-0.003
T21BS	0.000
T22BS	0.045
T23BS	-0.001
T24BS	-0.008
*T32BS	0.991
Total	0.991

*T32BS is the only bin support member instrumented to react to a longitudinal load.

9. LONGITUDINAL DYNAMIC TEST RESULTS AND DISCUSSION.

The following terminology will be used when referring to the data. Time is referenced to the moment of impact. The measured maximum vertical load is the maximum value of the sum of the measured bin support members reacted loads at a given moment in time. The inertial bin load is the weight of the bin multiplied by the measured acceleration (average when available) of the bin in the corresponding axis. Static equivalent load is the load distribution of each bin support member calculated by multiplying the total measured load by the bin support member

influence coefficient. Since Test 2L only had one bin support member to react to longitudinal loading, the inertial longitudinal data was used instead of the total measured load data. The data was filtered using an SAE CFC 60 - 100 Hz low-pass filter.

Static influence coefficients were generated using unidirectional loading. During the longitudinal static load calibrations, the fuselage and bins behaved as a rigid body—the bins and fuselage sections experienced the same loads, and there was no observed or measured deformation. During the longitudinal sled tests, the fuselage bins and fuselage sections experienced similar loads and no permanent structural deformation of the fuselage was noted. There was some flexing bending of the fuselage and bins that introduced some lateral and longitudinal loads into the bin support members.

9.1 LONGITUDINAL DYNAMIC AMPLIFICATION.

Table 15 shows the effects of dynamic amplification for the longitudinal sled tests. In the longitudinal sled tests, there was some dynamic amplification of the overhead stowage bin compared to the upper sidewall fuselage. This was especially true for the 13.2-g sled test in Test 2L. A comparison of the average crown acceleration of the fuselage and the overhead stowage bin showed mixed results. In Test 2L, the 12.7-g peak value sustained by the Boeing bin occurred at approximately 25 msec before the peak vertical sled acceleration.

Table 15. Longitudinal Sled Test Accelerations

Test No.	Acceleration (g)				C&D Bin Left-Side Acceleration (g)	Hexcel Bin Right-Side Acceleration (g)
	Sled	Floor	Sidewall	Crown		
Test 1L-6	6.1	7.0	----	----	7.1	7.7
Test 1L-9	8.2	8.6	----	----	10.1	9.0
Test 1L-14	14.2	16.5	----	----	*14.7	16.7
Test No.	Acceleration (g)				Boeing Bin Left-Side Acceleration (g)	Hitco Bin Right-Side Acceleration (g)
	Sled	Floor	Sidewall	Crown		
Test 2L-6	5.9	6.0	6.3	6.7	-----	6.7
Test 2L-9	8.8	9.1	9.6	10.3	**12.7	10.7
Test 2L-14	13.2	14.5	14.9	15.1	-----	17.4

*Bin failed after this reading.
**Occurred 25 msec before peak sled reading.

9.2 LONGITUDINAL INERTIAL BIN LOADS.

The current certification requirements listed in 14 CFR 25.561(b)(3) are upward 3.0 g, forward 9.0 g, lateral ±3.0 g, downward 6.0 g, and rearward 1.5 g. Additional ultimate operational load factors imposed from service flight conditions are 7.3 g downward and 3.6 g upward. The vertical test results shown in table 16 indicate that some of the induced vertical, lateral, and longitudinal inertial loads exceeded current load requirements (in bold).

Table 16. Maximum Longitudinal Sled Test Bin Accelerations

Bin	Maximum Inertial Load (g)			Maximum Inertial Load (g)			Maximum Inertial Load (g)		
	x direction	y direction	z direction	x direction	y direction	z direction	x direction	y direction	z direction
	Test 1L-6			Test 1L-9			Test 1L-14		
C&D bin	6.9	±1	±2	**10.1**	±1	±1	***14.7**	----	----
Hexcel bin	7.7	±2	±3	9.0	±1	±1	**16.7**	±1	±3
	Test 2L-6			Test 2L-9			Test 2L-14		
Hitco bin	6.7	±2	±2	**10.7**	±2	±2	**17.4**	----	----
Boeing bin	**	**	**	**12.7**	±2	±1	**	**	**

*Bin failed after this reading.
**Bin failed.
Bold indicates values exceeded current certification requirements.

9.3 COMPARISON OF STATIC AND DYNAMIC LONGITUDINAL LOADING.

9.3.1 C&D Bin Test 1L—Static and Dynamic Loading.

Longitudinal sled tests were conducted at sled acceleration levels of 6.1, 8.2, and 14.2 g. A comparison of static and dynamic longitudinal loading for each support member was made at the 6.9-, 10.1-, and 14.7-g bin load condition (table 17) where possible. The corresponding static and dynamic component influence coefficients are shown in table 18. The difference between the static and dynamic component influence coefficients of the primary longitudinal supports (AU75 and AU76) were less than 22%. At the time of failure, the bin was able to support a measured dynamic load of approximately 15 g longitudinal. The inertial data listed in table 16 show that the bin was able to sustain loads of +2/-2 g vertical, +2/-1 g lateral, and +14.7 g longitudinal. The C&D bin fuselage mounting rail was attached at two frames and a thin-walled ventilation duct. During the 14.2-g test, the bin failed and the ventilation duct was damaged.

Table 17. C&D Bin Static and Dynamic Loads for Longitudinal Loading

Support Member Time of Measurement	Test 1L-6 Static Equivalent Longitudinal (x) Load (lb)	Test 1L-6 Maximum Measured Dynamic Longitudinal (x) Load (lb)	Test 1L-9 Static Equivalent Longitudinal (x) Load (lb)	Test 1L-9 Maximum Measured Dynamic Longitudinal (x) Load (lb)	Test 1L-14 Static Equivalent Static Longitudinal (x) Load (lb)	Test 1L-14 Maximum Measured Dynamic Longitudinal (x) Load (lb)
AU75 @ 102, 62, 48 msec	519	464	517	458	516	408
AU76 @ 102, 62, 48 msec	703	702	701	658	700	731
AU78 @ 102, 62, 48 msec	52	69	52	201	52	118
AL78 @ 102, 62, 48 msec	154	141	153	124	153	116
AL76 @ 102, 62, 48 msec	391	437	389	407	389	477
AL75 @ 102, 62, 48 msec	270	285	270	244	270	241
Total Load	-------	2098	-------	2092	-------	2091
AU75 @ -----, 93, 53 msec	-------	-------	755	606	740	584
AU76 @ -----, 93, 53 msec	-------	-------	1024	935	1004	990
AU78 @ -----, 93, 53 msec	-------	-------	76	202	75	254
AL78 @ -----, 93, 53 msec	-------	-------	223	196	219	187
AL76 @ -----, 93, 53 msec	-------	-------	568	625	557	637
AL75 @ -----, 93, 53 msec	-------	-------	394	492	387	345
Total Load	-------	-------	-------	3056	-------	2997
AU75 @ 66 msec	-------	-------	-------	-------	1096	854
AU76 @ 66 msec	-------	-------	-------	-------	1487	1235
AU78 @ 66 msec	-------	-------	-------	-------	111	459
AL78 @ 66 msec	-------	-------	-------	-------	324	268
AL76 @ 66 msec	-------	-------	-------	-------	825	913
AL75 @ 66 msec	-------	-------	-------	-------	573	709
Total load	-------	-------	-------	-------	-------	4438

Note: C&D bin broke free from its mounts during the dynamic 16-g test at 66 msec.
*Estimated from the three acceleration plots shown in the appendix of reference 3.

Table 18. C&D Bin Static and Dynamic Component Influence Coefficients for Longitudinal Loading

Support Member Time of Measurement	Longitudinal Component Influence Coefficient			
	Static	Test 1L-6 Dynamic	Test 1L-9 Dynamic	Test 1L-14 Dynamic
AU75 @ 102, 70, 57 msec	0.247	0.221	0.219	0.195
AU76 @ 102, 70, 57 msec	0.335	0.335	0.315	0.350
AU78 @ 102, 70, 57 msec	0.025	0.033	0.096	0.056
AL78 @ 102, 70, 57 msec	0.073	0.067	0.059	0.055
AL76 @ 102, 70, 57 msec	0.186	0.208	0.195	0.228
AL75 @ 102, 70, 57 msec	0.129	0.136	0.117	0.115
AU75 @ 93, 62 msec	0.247	-------	0.198	0.195
AU76 @ 93, 62 msec	0.335	-------	0.306	0.330
AU78 @ 93, 62 msec	0.025	-------	0.066	0.085
AL78 @ 93, 62 msec	0.073	-------	0.064	0.062
AL76 @ 93, 62 msec	0.186	-------	0.205	0.213
AL75 @ 93, 62 msec	0.129	-------	0.161	0.115
AU75 @ 66 msec	0.247	-------	-------	0.192
AU76 @ 66 msec	0.335	-------	-------	0.278
AU78 @ 66 msec	0.025	-------	-------	0.103
AL78 @ 66 msec	0.073	-------	-------	0.060
AL76 @ 66 msec	0.186	-------	-------	0.206
AL75 @ 66 msec	0.129	-------	-------	0.160

Note: C&D bin broke free from its mounts during the dynamic 16-g test at 66 msec.

9.3.2 Hexcel Bin Test 1L— Static and Dynamic Loading.

Longitudinal sled tests were conducted at sled acceleration levels of 6.1, 8.2, and 14.2 g and 23.2, 32.2, and 41.7 ft/s, respectively. A comparison of static and dynamic longitudinal loading for each support member was made at the 6.9-, 10.1-, and 14.7-g bin load conditions (table 19) where possible. Measured load values taken at the same moment in time as the inertial data were used to derive the longitudinal component influence coefficient. The corresponding static and dynamic longitudinal influence coefficients are shown in table 20. The measured static influence coefficients were compared to the measured dynamic influence coefficients. The difference between the static and dynamic influence coefficients of the primary longitudinal supports (5 and 6) were approximately 2 percent. The results show that this bin was able to support, without failure, measured dynamic loads of approximately 17 g longitudinal. The inertial data listed in table 16 show that the bin was able to sustain loads of +3/-3 g vertical, +2/-2 g lateral, and +17 g longitudinal.

Table 19. Hexcel Bin Static and Dynamic Loads for Longitudinal Loading

Support Member Time of Measurement	Test 1L-6 Static Equivalent Longitudinal (x) Load (lb)	Test 1L-6 Maximum Measured Dynamic Longitudinal (x) Load (lb)	Test 1L-9 Static Equivalent Longitudinal (x) Load (lb)	Test 1L-9 Maximum Measured Dynamic Longitudinal (x) Load (lb)	Test 1L-14 Static Equivalent Longitudinal (x) Load (lb)	Test 1L-14 Maximum Measured Dynamic Longitudinal (x) Load (lb)
5 @ 109, 70, 45 msec	640	650	710	715	708	750
6 @ 109, 70, 45 msec	563	553	625	620	622	650
Total load	-------	1203	-------	1335	-------	1400
5 @ 108, 58 msec	-------	-------	835	845	1117	1170
6 @ 108, 58 msec	-------	-------	734	724	983	1080
Total load	-------	-------	-------	1569	-------	2250
5 @ 95 msec	-------	-------	------	------	1548	1542
6 @ 95 msec	-------	------	------	-------	1362	1368
Total load	-------	-------	-------	-------	2910	2910

Bin support members 5 and 6 were the only members instrumented to react to a longitudinal load.

Table 20. Hexcel Bin Static and Dynamic Component Influence Coefficients for Longitudinal Loading

Support Member Time of Measurement	Longitudinal Component Influence Coefficient			
	*Measured Static	Test 1L-6 Dynamic	Test 1L-9 Dynamic	Test 1L-14 Dynamic
5 @ 109, 70, 45 msec	0.532	0.540	0.539	0.536
6 @ 109, 70, 45 msec	0.468	0.460	0.461	0.464
5 @ 108, 58 msec	0.532	-------	0.539	0.520
6 @ 108, 58 msec	0.468	-------	0.461	0.480
5 @ 95 msec	0.532	-------	-------	0.530
6 @ 95 msec	0.468	-------	-------	0.470

Note: Bin support members 5 and 6 are the only members instrumented to react to a longitudinal load.
*See section 4.3 for explanation.

9.3.3 Boeing and Hitco Bin Test 2L—Static and Dynamic Loading.

Both bins had only one support designed to react to longitudinal loads. As none of the other brackets were instrumented to measure longitudinal loads, a comparison between static and dynamic influence coefficients could not be performed.

10. RESULTS AND CONCLUSIONS.

From 1991 to 2000, the Federal Aviation Administration (FAA) conducted vertical and longitudinal tests of various narrow-body transport airplane fuselage sections, which included different types of in-service overhead stowage bins. This summary report examined overhead stowage bins' structural integrity in previously conducted tests and reports on the distribution of the loads among the bin support members for static and dynamic loading. The results of an analytical model of the Boeing 737 fuselage test were also included. The results and conclusions are as follows.

10.1 LONGITUDINAL SIMULATED IMPACT SLED TESTS.

A series of longitudinal sled tests on two narrow-body transport fuselage sections with overhead stowage bins were conducted at three load levels, (nominally 6, 9, and 16 g). For the C&D Interiors and Hexcel bins in Test 1L, the static and dynamic influence coefficients differed by 22% and 2% for the C&D Interiors and Hexcel bins, respectively. Data was not adequate to analyze the response of the Boeing and Hitco bins in Test 2L. In the 6-g test, the Boeing bin experienced failure below the static certification requirement. The bin tore at the location where the longitudinal mounting bracket attaches to the bin. The bin attachment location was reinforced with a metal plate located inside the bin to redistribute the loads. The bin was successfully retested at the 9-g level and sustained no further damage. Similar problems had been observed at aircraft accident sites, which led to the discovery of a design flaw. An Airworthiness Directive was subsequently issued to correct the affected airplanes using a similar design. In the 6-g test the Hitco bin longitudinal support bracket sustained some bending and was replaced. No further evidence of structural deformation was observed for the 9- and 16-g tests.

In all tests, the static calibrations applied a longitudinal (unidirectional) load with no resulting structural deformation. In the dynamic tests, all bins were able to exceed the current forward longitudinal emergency landing load specified in Title 14 of the Code of Federal Regulations (CFR) 25.562 by 130 percent. The C&D bin fuselage mounting rail was attached to a thin-walled ventilation duct. During the 16-g test, the bin failed and the duct was damaged.

10.2 VERTICAL DROP TESTS.

Two narrow-body transport fuselage sections with overhead stowage bins were dropped from a height of 14 feet, resulting in a vertical impact velocity of 30 ft/sec. This resulted in what was considered a severe, but survivable, impact condition.

The static and dynamic vertical component influence coefficients from the test data differed by approximately 33% percent in the two tests. The overhead stowage bins experienced dynamic loads in excess of 15 g vertical using a 100-Hz filter. All the bin inertial g levels, with the exception of the forward longitudinal direction, exceeded current 14 CFR 25.561(b)(3) emergency landing load factors and ultimate operational load factors. Due to their robust design, three of the four bins remained attached to the fuselage despite the severe load conditions.

Static test calibrations applied only a vertical (unidirectional) load with no resulting structural deformation. However, the vertical drop tests resulted in substantial structural deformation of the fuselage section in which the bins were installed. The deformation introduced lateral and longitudinal loading to the bin. The fuselage deformation also resulted in reorientation of the bin axis. In the first Boeing 737 vertical drop test, the Boeing passenger service unit (PSU) released at the attachment end and swung open.

The analytical static and dynamic vertical component influence coefficients differed by approximately 40 and 50 percent for the Hitco and Heath Tecna bins, respectively. The analytical modeling results confirmed that the fuselage response produced asymmetrical loading that influenced the reaction and loading of the overhead stowage bins.

10.3 OVERALL RESULTS.

This report summarizes the distribution of loads among the bin support members for both static and dynamic loading conditions, the strengths, and failure modes (if any) of various overhead stowage bins. This information provides a basis to assess the adequacy of the current design standards and regulatory requirements for overhead stowage bins.

The difference between static and dynamic loading of the bins was primarily a function of the deformation of the fuselage structure. Longitudinal-simulated impact tests resulted in small fuselage deformation and in small differences between static and dynamic loading. The lateral and vertical loads developed during the longitudinal simulated impact tests (6, 9, and 16 g) were below emergency landing loads and operational loads requirements. Vertical impact tests resulted in large fuselage deformation and in large differences between static and dynamic loading. The longitudinal and lateral loads developed during vertical impact tests exceeded emergency landing loads and operational loads requirements.

Overhead stowage bin doors have been documented to open during rough turbulence and crash impacts. Therefore, the bin doors were latched and strapped shut to ensure the bin contents remained inside the bins during the impact to subject the bins to the most adverse load condition. However, the failure of the C&D bin and mounting rail in one of the vertical drop tests resulted in the contents falling out of the bottom of the bin and onto the anthropomorphic test dummies occupying in the seats below the bin.

Three of the four bins certified to current static strength criteria were able to sustain loads generated in the severe but survivable vertical impact tests. This demonstrates that statically designed overhead stowage bins can withstand impact loads generated in severe but survivable impacts.

11. REFERENCES.

1. Ault, D., “Longitudinal Acceleration Test of Overhead Luggage Bins in a Transport Airframe Section,” FAA report DOT/FAA/CT-92/9, November 1992.

2 Logue, T., McGuire, R., Reinhardt, J., and Vu, T., “Vertical Drop Test of a Narrow-Body Fuselage Section With Overhead Stowage Bins and Auxiliary Fuel Tank on Board,” FAA report DOT/FAA/CT-94/116, April 1995.

3. McGuire, R. and Macy, T., “Longitudinal Acceleration Tests of Overhead Luggage Bins and Auxiliary Fuel Tank in a Transport Airplane Airframe Section,” FAA report DOT/FAA/AR-99/4, June 1999.

4. McGuire, R., “Longitudinal Acceleration Tests of Overhead Luggage Bins and Auxiliary Fuel Tank in a Transport Airplane Airframe Section, Part II,” FAA report DOT/FAA/AR-99/4,II, October 2000.

5. Abramowitz, A., Smith, T., Tong, V., and Zvanya, J., “Vertical Drop Test of a Narrow-Body Transport Fuselage Section With Overhead Stowage Bins,” FAA report DOT/FAA/AR-01/100, September 2002.

6. Improved Seat Safety Standards, Title 14 CFR Part 25, Amendment No. 25-64, Effective date – June 16, 1988.

7. Byar, A., “A Crashworthiness Study of a Boeing 737 Fuselage Section,” May 2003.

8. Jackson, Karen E. and Fasanella, Edwin L., “Crash Simulation of Vertical Drop Tests of Two Boeing 737 Fuselage Sections,” FAA report DOT/FAA/AR-02/62, August 2002.