DOT/FAA/AR-10/11

Air Traffic Organization
NextGen & Operations Planning
Office of Research and
Technology Development
Washington, DC 20591

A Review of Bonding Pretreatment Procedures and Analytical Chemistry Methods for Detecting Composite Surface Contamination and Moisture

November 2010

Final Report

This document is available to the U.S. public through the National Technical Information Service (NTIS), Springfield, Virginia 22161.

This document is also available from the Federal Aviation Administration William J. Hughes Technical Center at actlibrary.tc.faa.gov.

U.S. Department of Transportation
Federal Aviation Administration

NOTICE

This document is disseminated under the sponsorship of the U.S. Department of Transportation in the interest of information exchange. The United States Government assumes no liability for the contents or use thereof. The United States Government does not endorse products or manufacturers. Trade or manufacturer's names appear herein solely because they are considered essential to the objective of this report. This document does not constitute FAA certification policy. Consult your local FAA aircraft certification office as to its use.

This report is available at the Federal Aviation Administration William J. Hughes Technical Center's Full-Text Technical Reports page: actlibrary.tc.faa.gov in Adobe Acrobat portable document format (PDF).

Technical Report Documentation Page

1. Report No. DOT/FAA/AR-10/11	2. Government Accession No.	3. Recipient's Catalog No.
4. Title and Subtitle A REVIEW OF BONDING PRETREATMENT PROCEDURES AND ANALYTICAL CHEMISTRY METHODS FOR DETECTING COMPOSITE SURFACE CONTAMINATION AND MOISTURE		5. Report Date November 2010 6. Performing Organization Code
7. Author(s) Xiangyang Zhou, Dwayne McDaniel, and Richard Burton		8. Performing Organization Report No.
9. Performing Organization Name and Address Applied Research Center Florida International University Miami, Florida 33157		10. Work Unit No. (TRAIS) 11. Contract or Grant No. 07-C-AM-FIU
12. Sponsoring Agency Name and Address U.S. Department of Transportation Federal Aviation Administration Air Traffic Organization NextGen & Operations Planning Office of Research and Technology Development Washington, DC 20591		13. Type of Report and Period Covered Final Report 14. Sponsoring Agency Code ACE-110

15. Supplementary Notes

The Federal Aviation Administration Airport and Aircraft Safety R&D Group Technical Officer was Curt Davies.

16. Abstract

The Federal Aviation Administration is evaluating the aerospace industry's increasing implementation of bonded structural joints in aircraft, including composite applications, which lend themselves to adhesive bonding. Previous investigations of mechanical property testing of bond surface preparation found it inadequate to ensure the actual part surface is acceptable for subsequent bonding. To understand what is necessary for these applications to reach an acceptable level of reliability, the need for chemical surface analysis techniques, as well as understanding the current industry practice for surface quality of composite bonded joints, were identified. As such, the research team at Florida International University outlined a roadmap for conducting research in adhesive bonding that consists of two phases. The first phase of this research was to benchmark current industry practices for surface quality and to identify potential chemical analysis techniques. The second phase will evaluate these technologies. This report discusses the findings of the first phase of completed research. In this phase, a literature review was conducted on surface pretreatment procedures, technologies for surface chemistry analysis, and quality control methodologies for adhesive bond fabrication that focused on the aerospace industry. General conclusions from the review included the following: (1) quality control, assurance, and inspection methods should be used for all steps of the adhesive bond fabrication processes; (2) minimizing the fabrication variations will enhance the durability of adhesive bonds; (3) environmentally durable adhesive bonds are often associated with strong covalent bonds; and (4) surface pretreatments should emphasize generating chemically activated adherend surfaces rather than only the cleanliness of the adherend surfaces. A review of currently available technologies for surface chemistry analysis was also conducted. It is clear from the review that each of the existing methods has limitations and cannot provide in-field surface contamination detection for prebond surfaces. However, two analytical methods did show potential and warrant further investigation. These included a solid-state electrochemical sensor and the atomic force microscope. Although both of these technologies have their limitations, they demonstrate the potential for detecting changes in surface chemistry and surface activity, providing necessary information for improving bond integrity. Upon completion, the findings of the second phase of this research will be presented in a separate report.

17. Key Words Adhesive Bonding, Aerospace industry, Analytical chemistry, Atomic-force microscopy, Composite materials, Electrochemical sensors, Quality control, Surface analysis		18. Distribution Statement This document is available to the U.S. public through the National Technical Information Service (NTIS), Springfield, Virginia 22161. This document is also available from the Federal Aviation Administration William J. Hughes Technical Center at actlibrary.tc.faa.gov.	
19. Security Classif. (of this report) Unclassified	20. Security Classif. (of this page) Unclassified	21. No. of Pages 48	22. Price

Form DOT F 1700.7 (8-72) Reproduction of completed page authorize

TABLE OF CONTENTS

			Page
EXECUTIVE SUMMARY			ix
1.	INTRODUCTION		1
2.	SURFACE PRETREATMENT TECHNIQUES		3
	2.1	Mechanical Abrasion	3
	2.2	Solvent Degreasing and Wiping	4
	2.3	Irradiation Pretreatments	4
		2.3.1 Corona Discharge	4
		2.3.2 Plasma Glow Discharge Treatment	4
		2.3.3 Flame Treatment	5
		2.3.4 Laser Treatment	5
	2.4	Chemical Pretreatments	5
		2.4.1 Chemical Etching	5
		2.4.2 Electrochemical Treatment (Anodizing)	5
		2.4.3 Surface Coating	6
		2.4.4 Primers	6
	2.5	Peel Ply for Composite Materials	7
	2.6	Commonly Used Methods for Metallic Adherend	7
3.	PROCESS QUALITY MANAGEMENT		7
	3.1	Materials Certification	10
	3.2	Pretreatment Certification	10
	3.3	Adhesive Application Certification	12
	3.4	Bonding Certification	12
	3.5	Technician Certification	13
4.	NATURE OF ADHESION AND ITS IMPLICATION TO SURFACE TREATMENT AND BONDING PROCESSES		14
	4.1	Cleanliness Versus Nature of Intermolecular Bonds	17
	4.2	Sources of Moisture and Impact of Moisture	18
5.	TECHNOLOGIES FOR BOND INTEGRITY AND SURFACE ANALYSIS		19
	5.1	Contact Angle Method	20

5.2 Neutron Radiography 20
5.3 X-Ray and Gamma Ray 21
5.4 Near Infrared 22
5.5 Nonlinear Ultrasound 22
5.6 Transient or Pulsed Thermal NDT 23
5.7 Electrical Potential Drop Technique 24
5.8 Electrochemical-Sensing Techniques 25
5.9 Atomic Force Microscopy 25

6. PROMISING ANALYTICAL CHEMISTRY METHODS FOR FUTURE STUDY 27

6.1 Electrochemical Sensor 29
6.2 Atomic Force Microscopy 29

7. REFERENCES 30

LIST OF FIGURES

Figure		Page
1	Example of Control Chart	8
2	An Example Flowchart for the Bond Fabrication Process	9
3	Covalent Bond Formation Between Adherend and Adhesive	16
4	Thermodynamic Equilibria of a Sessile Liquid Drop on a Solid Substrate	20
5	Basic Components of an NR System	21
6	Basic Components of a Monochromatic XPS System	21
7	Basic Components of an NIR System	22
8	Basic Components of an NLUS System	23
9	Active Approach in Thermography	23
10	Schematic Setup for DC Potential Drop Measurement	24
11	Operating Principles of the AFM	26

LIST OF TABLES

Table		Page
1	Energies of Interatomic and Intermolecular Interactions	15
2	Advantages and Disadvantages of NDT and NDI	27

LIST OF ACRONYMS

AFM	Atomic force microscopy
BWT	Boeing Wedge Test
CCV	Common cause variation
DC	Direct current
EIS	Electrical impedance spectroscopy
ENA	Electrochemical noise analysis
FAA	Federal Aviation Administration
FTIR	Fourier transform infrared
JKR	Johnson-Kendall-Roberts
N	Nitrogen
ND	Nondestructive
NIR	Near infrared
NDI	Nondestructive inspection
NLUS	Nonlinear ultrasound
NR	Neutron radiography
O	Oxygen
PEEK	Polyetheretherketone
PTFE	Polytetrafluoroethylene
RAIR	Reflection-absorption infrared
SIMS	Secondary ion mass spectroscopy
SCV	Special cause variation
SOP	Standard operating procedure
XPS	X-ray photon spectroscopy
XRF	X-ray fluorescence spectroscopy

EXECUTIVE SUMMARY

The Federal Aviation Administration is evaluating expanded applications of bonded structural joints, including composite applications in the aerospace industry, which lend themselves to adhesive bonding. Previous investigations of mechanical property tests of bond surface preparation found them inadequate to ensure the actual part surface is suitable for subsequent bonding. To understand what is required for these applications to reach an acceptable level of reliability, the need for chemical surface analysis techniques, as well as understanding the current industry practice for surface quality of composite bonded joints, were identified. As such, the research team at Florida International University outlined a roadmap for conducting research in adhesive bonding that consists of two phases. The first phase of this research was to benchmark current industry practices for surface quality and to identify potential chemical analysis techniques. The second phase will evaluate these technologies. This report discusses the findings of the first phase of completed research. In this phase, a literature review was conducted on surface pretreatment procedures, quality control methodologies for adhesive bond fabrication, and technologies for surface chemistry analysis that focused primarily on the aerospace industry but also considered practices in other applicable industries. Quality control, assurance, and inspection methods should be used for all steps of the adhesive bond fabrication processes. Minimizing the fabrication variations will enhance the durability of adhesive bonds. At the molecular level, environmentally durable adhesive bonds are often associated with strong covalent bonds. Surface pretreatments should emphasize generating chemically activated adherend surfaces that allow formation of strong covalent intermolecular bonds that are resistant to environmental impacts under service conditions rather than only on the cleanliness of the adherend surfaces.

A review of currently available technologies for surface chemistry analysis was also conducted. It is clear that all the existing methods have limitations. The technologies reviewed could not provide in-field surface contamination detection for prebond surfaces. The available methods did not satisfy the requirements for online and in-field surface chemistry analysis. Two analytical methods that have potential for further investigation are (1) a solid-state electrochemical sensor that is based on electrochemical-sensing techniques and (2) the atomic force microscope. An all solid-state electrochemical sensor would impose an oxidation/reduction reaction on the surface of a polymer-matrix composite material and provide a measure of the surface chemistry or contamination level. The atomic force microscope can be used to determine the changes in chemical function groups or the surface activity, providing necessary information for improving bond integrity. Since these techniques have been identified, the next phase of this research will evaluate each of these techniques and present the findings in a separate report.

1. INTRODUCTION.

The Federal Aviation Administration is evaluating expanded applications of bonded structural joints, including composite applications, which lend themselves to adhesive bonding. Previous investigations of mechanical property testing of bond surface preparation found it inadequate to ensure the actual part surface is suitable for subsequent bonding. As such, the goals of this research were to (1) identify surface quality assurance methods that are currently being used by aircraft manufacturers and repair service providers and determine whether the current quality assurance tests are sufficient to ensure that contamination can be detected and (2) identify and evaluate definitive analytical chemistry methods to provide sufficient in-field quality assurance. This report summarizes the review of the available surface quality assurance methods and the analytical chemistry methods for in-field quality assurance, discusses the conclusions based on the review, and presents a general outline for how the research will continue into the future.

Improvement in the processing and fabrication technologies in the aerospace industry, especially in manufacturing primary aircraft structures and their acceptance, will result in greater strength and durability of bonded structures [1]. The design principle for any adhesive-bonded joint or adhesive bond requires that the strength of the cured adhesive is greater than the strength of the adherend [1]. However, the promise of a strong adhesive does not prevent bond interface failures from occurring either in laboratory tests or during service under environmental influences. The bond interface or adhesion failure is characterized by adhesive remaining on only one of the adherends in the original bonded structure. The occurrence of frequent bond interface or adhesion failures implies that the bond strength at the bond interface is weaker than the bulk material. These weak bonds are often due to inadequate surface treatments that may also result in higher susceptibility to environmental impacts, including water ingress at the interface area.

Surface pretreatment or preparation has been implemented in the aerospace industry for many years to ensure strong adhesive bonds. Many of the pretreatment procedures result in adhesive bonds that have a high initial bond strength but do not always demonstrate good durability [2 and 3]. Service experiences with adhesive-bonded joints have displayed variable failure modes. Some provide extended service lives while others fail before the expected service lives. For example, adhesive bond failures, including metal/metal, metal/composite, and composite/composite, were cited as the major cause for 53% of structural defects in the Royal Australian Air Force [1]. Analyses of the bond failures have revealed that many of the adhesive-bonded joints failed at the interface between adhesive and adherend (adhesion failure mode) [4-7]. Such a wide variation in bond durability [2, 3, and 8-10] strongly suggests deficiencies in the quality control of the pretreatment and bond fabrication processes.

The quality deficiencies can be minimized by implementing quality management methodologies in the fabrication process. Quality management methodologies were first implemented by Japanese manufacturers in the 1980s [11]. This resulted in controlled process variations and superior product quality and was regarded as “the second industrial revolution.” Quality management emphasizes grass-root efforts toward eliminating system errors, controlling and monitoring the measurable qualities, and streamlining process flow. This is done so that the

product quality, in terms of failure rates, is within predetermined limits, and the products have a desired reliability and durability [11 and 12].

Quality assurance requires the implementation of effective quality inspection technologies and coupon tests. A number of nondestructive inspection (NDI) methods, including conventional ultrasonic techniques, oblique incidence ultrasonic technique, Lamb waves, sonic vibrations, spectroscopic methods, acoustic emission, thermal methods, radiography, and optical holography, have been used to detect defects in adhesive-bonded structures [1-3, 5 and 6]. While these NDI tests will eliminate bonds with detectable defects and cracks, they are incapable of providing full assurance of bond strength and long-term durability. For instance, these NDI technologies cannot detect what is known as the "kissing bond" [13] or weak bonding due to weak intermolecular interactions at the interfaces between the adhesive and adherend molecules because these interface defects may be as small as a few atoms and well below the sensitivity of the industrial NDI technologies.

The Boeing Wedge Test (BWT) and the lap-shear test are the two most widely used coupon tests. These coupon tests are intended to evaluate the strength and durability of the bonded components that were fabricated using the same procedures and under the same nominal conditions. However, the results of the coupon tests may not necessarily reflect the reality of the bonded components that were fabricated under the similar nominal conditions.

Quality assurance for adhesive bonds in the industry relies on implementation of the quality assurance and quality control methods for the adherend surface preparation and bonding procedures [3 and 14]. There are at least three stages for fabricating an adhesive bond. (1) The acquisition, shipping and handling, inspection, and storage stage of the adherends and adhesives should be included in a standard operation procedure. (2) In the surface preparation stage, clean and active adherend surfaces have to be prepared. Multiple techniques and steps may need to be carried out during this stage. Workshop settings and environment (temperature, cleanliness, and humidity level), methods, tools, timing, and personnel training are parameters that have to be carefully controlled. (3) These parameters also need to be closely controlled in the bonding and curing stage. However, the quality control and assurance for the surface preparation processes are implemented without a fundamental understanding of what makes a good or bad surface, and particularly, a definitive, in-field surface quality evaluation method. This leads to two major problems. Some of the currently existing surface preparation processes may be unnecessarily detailed, laborious, and time-consuming. The processes may be simplified to avoid undue expenses and to make the manufacturing process more economic. On the other hand, some currently existing processes may be inadequate for ensuring high-quality adhesive bonds, particularly in terms of strength and durability. Identification and implementation of an in-field surface quality evaluation method will result in reduction of uncertainty, cost, and complexity of the existing bonding processes and improvement of the strength and durability of the adhesive bonds.

Many earlier surface pretreatment or preparation procedures seemingly were focused on eliminating surface contaminants and moisture, increasing surface tension, and improving mechanical interlocking [13]. More evidence suggests that adhesive bonds that are formed on the pretreated adherend surfaces with a high surface tension and good mechanical interlocking

are not durable under the environmental influences [7]. On the other hand, because of their higher bond energies, intermolecular covalent bonds are resistant to water ingress and other environmental impacts, thereby enabling both high mechanical strength and good long-term durability.

By reviewing commonly used surface pretreatment procedures, four issues that are critical to the durability of adhesive-bonded structure were investigated: (1) surface pretreatment techniques, (2) quality management in the fabrication processes, (3) the nature of the bond interface and its implication to a durable adhesive bond, and (4) moisture and its impact. The objective of this report is to highlight factors that may affect the durability of adhesive-bonded structures and to identify approaches to enhance the durability of adhesive bonds. Most of the discussions relate to the aerospace industry, but some points do relate to manufacturing processes in other industries.

2. SURFACE PRETREATMENT TECHNIQUES.

The main objective of a surface pretreatment procedure is to provide clean, fresh, and active surfaces that permit formation of strong and durable bonds between the adherends and the applied adhesive. The pretreatment techniques can be classified according to the desired outcomes, such as removing surface contaminants and producing chemically activated surfaces for enhancing the bond strength and durability. Pretreatment methods can also be categorized according to the nature of the processes, such as mechanical treatment (mechanical abrasion), solvent degreasing and wiping, irradiation treatments (corona discharge, plasma, flame, and laser), wet chemical treatments (chemical etching, anodizing), surface coating (sol-gel, plasma spray, sputtering), and primer application. Mechanical treatment cleans surface contaminants, alters topography, and removes weakly attached surface layers with only a slight change in the surface chemistry. Solvent degreasing and wiping cleans the surface contaminants and is not meant to change the surface chemistry. Other types of pretreatment methods alter the surface chemistry significantly. Usually, an optimal pretreatment procedure for a specific adherend/adhesive system is a sequential combination of several pretreatment methods. The following pretreatment methods were reported in the literature.

2.1 MECHANICAL ABRASION.

Mechanical abrasion can be performed with hand sanding or grit blasting. The forces of the abrasion remove the loose attachments and the outer layer of the substrate, so a fresh surface can be exposed and be suitable for either adhesive bonding or deposition of an additional surface layer in the subsequent process. Grit blasting can be automated and the degree of surface treatment can be controlled with the automatic grit-blasting process parameters [15]. Grit blasting allows better control of the pretreatment outcome through adjusting the grit size, nozzle distance, and number of passes, and hence, is a preferred method to hand sanding [3 and 7]. Care is needed to avoid over-eroding the substrate surface or producing a folded surface that traps contaminants and moisture [1].

2.2 SOLVENT DEGREASING AND WIPING.

Adherend surfaces are usually cleaned with an organic solvent (e.g., methyl ethyl ketone) before and after mechanic abrasion is done [16]. Surface wiping with a solvent-saturated cloth is the recommended method for preventing the contaminants from redistributing over the surface, and it removes most of the organic contaminants [1]. Organic contaminants on the adherend should be removed by solvent wiping before a subsequent mechanical abrasion process because mechanical abrasion may result in embedding the contaminants into the roughened surface layer. After the mechanical abrasion process, loose residues remaining on the surface should also be removed with solvent wiping for the next step of the fabrication process. Choosing a proper solvent is important because some organic solvents may dissolve the adherend substrate or alter the surface properties significantly.

2.3 IRRADIATION PRETREATMENTS.

2.3.1 Corona Discharge.

Corona discharge is a process in which a plasma or ionic current, perhaps sustained, develops from an electrode at a high electrical potential in a neutral fluid, usually air. The corona discharge process generates excited atoms, ions, and free radicals that can be used to bombard a polymer or composite surface for surface pretreatment. Corona discharge technology can be automated and is widely used to enhance adhesion between adhesives and composite surfaces [17-19]. A corona discharge treatment physically and chemically modifies polymer or composite surfaces and, hence, enables a rough and high-energy surface on which adhesive can easily spread. Similar to other irradiation treatment techniques, the state-of-the-art corona discharge technology can be applied to substrates with complex geometries.

2.3.2 Plasma Glow Discharge Treatment.

Plasma glow discharge has been used successfully for improving adhesion between adhesives and polymer composite surfaces or between adhesives and metal surfaces. The plasma glow is an electrically conductive, low-pressure plasma gas, which consists of excited atoms, ions, and free radicals. Various gases, such as argon (Ar), nitrogen (N_2), ammonia (NH_3), oxygen (O_2), tetrafluoromethane (CF_4), sulfur hexafluoride (SF_6) and mixed O_2-N_2, have been used in plasma treatments to clean and etch composite surfaces, and to alter the chemistry of the surfaces [2, 18, and 20-25]. The improved adhesion is attributed to the increase of surface roughness and formation of oxygen (O)- and nitrogen (N)-containing functional groups on the composite surface, which serve as anchors to link with adhesives [24]. The process can be automated, but the size of the low-pressure chamber limits the size of the structure to be treated. The plasma glow discharge is different from the corona discharge treatment in that, in the plasma glow treatment, the treated surface is under near zero electric field whereas, in the corona treatment process, the surface is under a very strong electrical field. Thus, the corona discharge treatment can be used for polymer and composite materials, but the plasma discharge treatment is applicable to polymer, composite, and alloy materials [17 and 20-23].

2.3.3 Flame Treatment.

In flame treatment, a flame is generated by gas burners supplied with gaseous hydrocarbons in air or oxygen. Flame treatment has been widely used for promoting good adhesion between thermoplastics and adhesives. Oxygenated flames are used to burn off surface contaminants and to introduce O-containing functional groups [2]. Controlling the degree of treatment is required to avoid thermal damages due to overheating by the oxygenated high temperature flames.

2.3.4 Laser Treatment.

Laser treatment can be conducted using either Excimer (i.e., ultraviolet radiation) or infrared (IR) laser sources. The technology has been successfully employed in treating polymer, composite [2 and 25-26], and metal surfaces [27-29]. The enhanced adhesion is attributed to chemical modification and photo ablation-induced surface roughness. The CLP Excimer method, by Ciba Specialty Chemicals, is one of the commercial technologies available for aircraft repairs. This technology can be applied manually or with a robotic system [28].

In summary, irradiation pretreatments are conducted by exposing adherend surfaces to streams of excited atoms, ions, free radicals, and photons in either air or controlled gas mixtures. The excited gas streams that are generated by corona discharge [19], plasma [24], or flame [2] modify the surface morphology and convert surface molecules into O- or N-containing functional groups. These O- and N-containing groups then serve as anchors for covalent bonds with adhesives [19, 22, 24, and 28-29]. In the case of laser treatment, high-density photons are carriers of energy that causes the chemical changes.

2.4 CHEMICAL PRETREATMENTS.

2.4.1 Chemical Etching.

Chemical etching treatments are commonly used for modifying metal surfaces and rarely used for polymer and composite substrates [30]. Typically, the substrates are immersed into either acidic (e.g., phosphoric or chromic acids) or alkaline (e.g., alkaline chlorite) solutions to produce a dense, stable oxide layer for subsequent adhesive bonding. Many treatment procedures for the application of a chromic acid or its modified formula (e.g., Forest Product Laboratory's treatment) have been developed. The etching process commonly consists of two or more steps involving more than two chemical dips at controlled temperature and a water rinse after each dip. These complicated processes are prone to large variations, which may result in large variations in bond durability. In addition, the highly toxic chromic solution waste is an environmental concern.

2.4.2 Electrochemical Treatment (Anodizing).

Electrochemical treatment has been widely used to modify metal [31], polymer, and composite [32] substrates in the aerospace industry. During the treatment, a substrate is immersed into an electrolyte solution and a predetermined direct current (DC) current is applied between a counter electrode and the substrate as the working electrode. An oxidized layer with a desired thickness

can be produced on the substrate surface. The chromic acid anodizing procedure is mostly used by the European Union (EU) aerospace industry, while the U.S. counterpart mostly uses the phosphoric acid anodizing procedure [8]. An anodizing treatment is more effective than a chemical etching treatment in producing a stable oxide layer with a desired thickness and chemical properties. A recent modification of the procedure uses an alternating current instead of a DC current, which greatly reduces the processing time [33]. For polymer substrates, an electrochemical treatment modifies the surface by introducing O-containing functional groups and roughening surfaces, thereby improving adhesion between adherend (including polypropylene, high-density polyethylene, styrene-butadiene-styrene, and polystyrene) and adhesives [32].

2.4.3 Surface Coating.

Surface coating is mostly used to deposit a dense oxide layer on a metal substrate. The procedure differs from the chemical etching and electrochemical pretreatment methods in that the oxide layer is deposited from an external source, rather than through direct oxidization of the surface layer of the substrate. The oxide layer can be deposited using hydrothermal (sol-gel) [34 and 35] and plasma spray processes [2]. In the sol-gel process, metal hydroxide or oxide sols, with a slightly acidic pH, is coated on the substrate surface and subsequently dried to form an oxide layer. Plasma spray is similar to the plasma treatment, but in addition to the plasma gases, plasma spray also injects high-velocity, molten oxide (titanium dioxide, magnesium oxide, or silicon dioxide) particles to the substrate [2 and 36]. Plasma spray produces a surface oxide layer with a uniform thickness and desired composition.

Silicon sputtering is another form of plasma spray in which organosilane is deposited on a titanium surface with the aid of argon plasma [37]. The procedure combines the surface-cleaning function of regular argon plasma and plasma spray with a precise control on the thickness of deposition. Improved resistance to water ingress is observed with this procedure.

2.4.4 Primers.

Primers are usually applied onto the surface as a coating after preliminary treatments (e.g., grit blasting or chemical treatment) to promote adhesion between the adherends and adhesives. This treatment has been effectively demonstrated for metal adherends [7 and 9]. Organosilanes, including aminopropyltriethoxy silane and glycidoxypropyltrimethoxy silane, are frequently used to improve durability in the presence of moisture [38-39]. Typically, organosilanes are first fully hydrolyzed in 1% aqueous solution with a slightly acidic pH. The substrates are then allowed to react with the hydrolyzed organosilane solution for a few minutes, and finally dried in an oven. Care is required to ensure coating uniformity and to reduce variations associated with each step of the procedure. Organophonic acids are also used as adhesion primers to promote covalent bond formation [34 and 40] at the adhesive and adherend interfaces. However, adhesive bonds formed with organophonic acids as the primer are not as durable as those bonds formed with the organosilane primer [41].

2.5 PEEL PLY FOR COMPOSITE MATERIALS.

Peel ply is another commonly used method of surface treatment. A removable fabric ply is molded onto the surface of a composite adherend to protect the bonding surface from contamination. Removing the surface provides a clean surface for the subsequent bonding process. Usually, removing the peel ply is followed by a mechanical abrasion process to activate the surface [14] and/or solvent wiping. Alternatively, an irradiation method (e.g., plasma or flame) is used to eliminate the residual organic contaminants and activate the surface at the same time [2].

2.6 COMMONLY USED METHODS FOR METALLIC ADHEREND.

For metal substrates, the goal is to form a fresh layer of metal oxides followed by a coating of primer to facilitate the formation of covalent bonds during the subsequent bonding step. Metal oxide layers can be formed with either wet or dry approaches. The wet approaches involve anodizing and surface coating. The dry approach is referred to as the Excimer laser or grit-blasting method by which a stable oxide layer can be formed [7 and 28].

3. PROCESS QUALITY MANAGEMENT.

In today's aerospace industry, adhesive bonding fabrication technology is often the preferred method to the fastening or riveting method. The adhesive bonding method is advantageous because it mitigates galvanic corrosion, increases joint strength, reduces overall structural weight, and is easily automated [34]. However, this technology is still considered unreliable for fabricating the primary aircraft structures because of the unpredictable in-service durability of the adhesive bonds [3]. The lack of an effective quality management procedure to ensure the durability of the adhesive-bonded joints is one of the major concerns that limit wider applications of the technology.

A multistep adhesive bonding process, with well-executed quality management, should ensure that the product failure rates fall below the expected value, regardless when, and by whom, the work is done [11]. The principles of quality management require identifying and subsequently controlling the operational variations in each step of the process [12]. Typically, operational variations include two forms of variations: common cause variation (CCV) and special cause variation (SCV). CCV is caused by many factors that are part of the process and are acting randomly and independently. The origin of the CCV can usually be traced back to the key elements of the adhesive-bonding fabrication process, including materials, equipment, environment, method, and technician. If only CCVs are present, the output of a process forms a stable distribution over time and, as such, is predictable. The SCVs are caused by unpredictable events leading to unexpected changes in the process output. The effects of the SCVs on the process outputs are intermittent and unpredictable. Acceptable fabrication processes must be brought into statistical control by first detecting and then removing the SCVs. The process outputs can be analyzed and controlled using two types of charts: control chart and flowchart. A control chart (figure 1), one of the fundamental tools used for process quality control, indicates the range of CCVs and the occurrences of SCVs. The control charts are marked by upper and lower control limits that are evaluated using statistical analysis methods. The process is either in

control or there are variations due to CCVs, if the process output falls between the limits. The process is out of control, or the variations are due to SCVs, if the outputs fall outside these limits, as shown in figure 1(a). A sudden change in the trend of variation (figure 1(b)) often implies a fundamental shift in the process system, such as using a noncertified raw material or expired reagent.

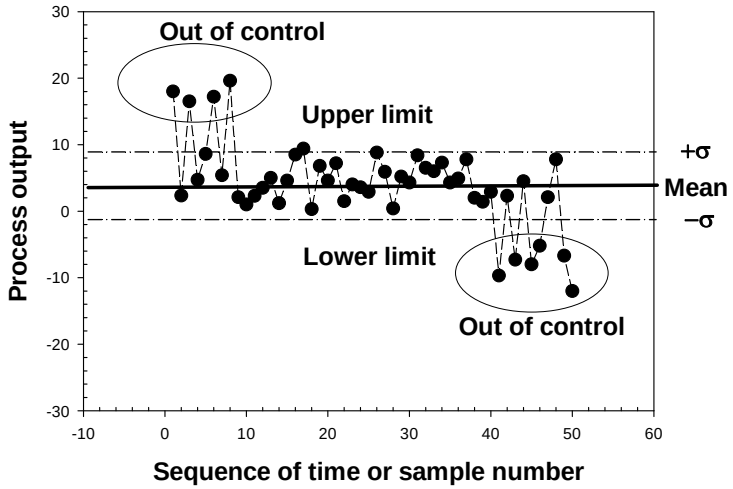

(a)

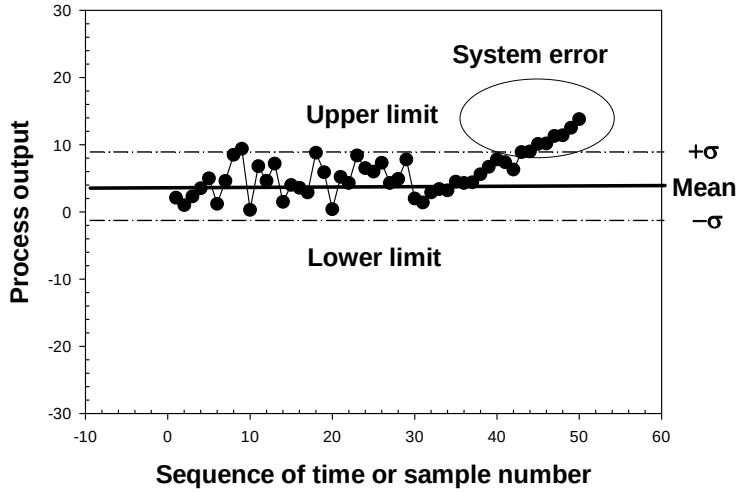

(b)

Figure 1. Example of Control Chart

Figure 2 shows a flowchart for managing the adhesive bond fabrication processes. By breaking the process down into its constituent steps, flowcharts can be useful in identifying where the errors are introduced in the system. The flowchart method can help to identify the causes for the SCVs in the three major steps of the adhesive bonding fabrication process.

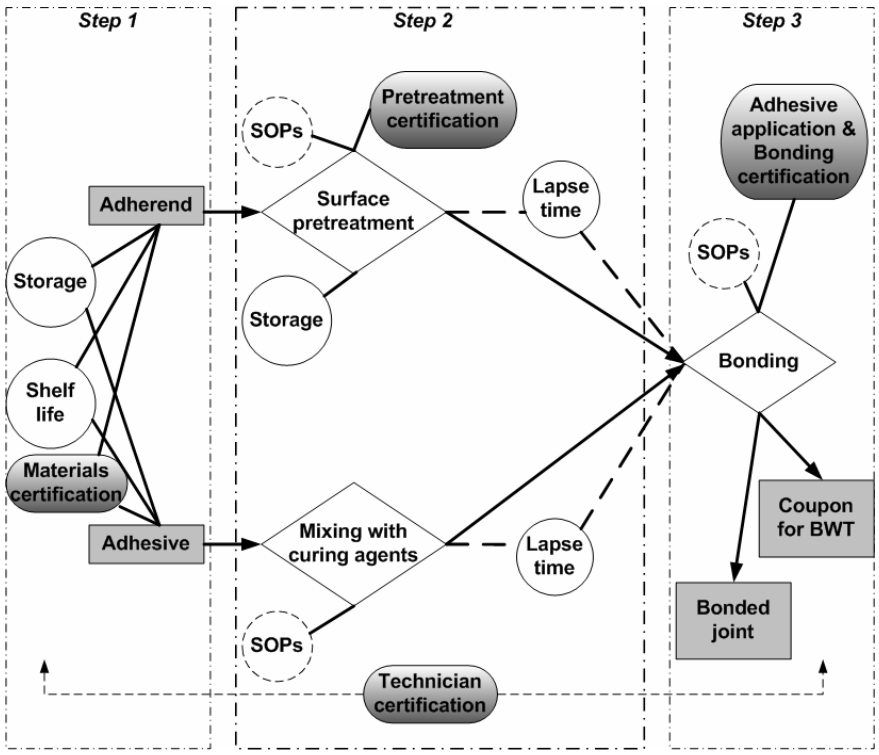

SOP = Standard operating procedure

Figure 2. An Example Flowchart for the Bond Fabrication Process

- Materials storage and pretreatment before surface treatment

  Conditions of the materials used to form the adhesive joint should be verified in this step. Material specifications should be acquired from suppliers and should be verified. The moisture contents in the adhesive and on the surfaces of the adherends should also be verified. Moisture content is a function of the storage conditions, packaging, and shelf-life of the adherends and adhesives. These parameters should comply with the requirements in the user manual provided by the supplier.

- Adherend surface pretreatment

  Adherend surface preparations should be executed according to a prevalidated standard operating procedure (SOP) for each step, and the surface conditions of the pretreated adherend should be verified with certified surface analysis methods. The prevalidated SOPs should also provide guidelines for the adherend storage conditions and the time before the next step. Cleanliness in the workshop is important because any surface without protection can be quickly covered with airborne contaminates during the fabrication process. The adhesives and adherends preparation time should be coordinated so that both are at their optimal conditions for bonding.

- Bonding

  The prevalidated SOPs should be followed strictly during bonding. Emphasis should be placed on executing the manufacturer-certified curing temperature program and maintaining a uniform adhesive bondline. It is vital to ensure that the fabrication process conditions exactly match the prevalidated SOP conditions.

  In summary, using the flowchart ensures that the production process strictly follows the prevalidated SOP at each step. To control and optimize the fabrication process, the managers should obtain precise performance data, including quantity, quality, and time for each step. Resources (technicians and equipment) should be deployed in such a way that the fabrication processes are reproducible. The spatial distribution of the fabrication lines should be optimized to reduce lapse time at each step so that the fabrication processes are less susceptible to contamination and external interrupts [11].

3.1 MATERIALS CERTIFICATION.

Materials certification requires clearly defined chemical and physical conditions of all materials used for the bonding process. These include the environmental conditions (e.g., temperature, relative humidity) encountered when the materials were stored and transported, as well as their expected shelf-life. For example, adherends supplied to the fabrication manufacturer should include surface chemistry certification in addition to material safety data sheets and physical characterization information. The surface chemistry certification for the adherends and adhesives should state the levels of contamination and moisture at which the materials were packaged. At the beginning of a bonding process, a consistent material quality is vital for eliminating SCVs. Materials arriving with damaged packages should not be used for the bonding process. Incorrect packaging, storing, or handling of materials and use of expired materials may result in defected adhesive bonds [3]. Incorrect storage conditions were cited as the causes of prebond moisture condensation on the adhesive film [5]. Epoxy adhesive film absorbs atmospheric moisture. High-moisture content may cause the adhesive film to boil off the adherend surface and form voids during curing at elevated temperatures. Using moisture-containing adhesives may result in a 50% reduction of the peel and shear strength of adhesive bonds [42]. References 4 and 5 indicate that durable bonded joints were made using moisture-free laminates and by implementing a validation procedure.

In addition to acquiring materials certifications, user's manuals, and other instructions from the materials suppliers and implementing a prevalidated procedure for materials storage, transport, and handling, adhesive bond manufacturers should also have analytical tools and methods in place to confirm the materials suppliers' certifications.

3.2 PRETREATMENT CERTIFICATION.

Surface pretreatment prior to adhesive bonding is vital for achieving high bond strengths and bond durability for high-performance aerospace applications [3]. From a quality control position, the surface's physical and chemical properties, including the roughness, tension, composition, oxidation and reduction states or activity, and the thickness of the active layer,

should be uniform and reproducible [34]. However, most of the analytical surface chemistry characterization technologies are only suitable for laboratory studies due to either lengthy sample preparation procedures, limitation to sample sizes, requirement for high vacuum, or limited sensitivity under realistic physical and chemical conditions. The analytical technologies include X-ray photon spectroscopy (XPS), Fourier transform infrared (FTIR), scanning electron microscopy-energy disperse analysis of X-ray, transmission electron microscopy, atomic force microscopy (AFM), and secondary ion mass spectroscopy (SIMS). Currently available in-field quality evaluation methods are not definitive in determining surface chemistry and are considered indirect measurements that roughly evaluate the physical and chemical properties. Some of these methods are being used for monitoring and controlling the quality of the following three types of pretreatments:

- Gloss meter and laser profilometry for mechanical abrasion treatment

  Grit blasting allows better control of the treatment outcome by adjusting the grit size, nozzle distance, and number of passes and, hence, is a preferred method to hand sanding [3 and 7]. The effect of grit blasting can be monitored using a hand-held gloss meter [42] or a three-dimensional laser profilometry [16]. Davis and Bond [1] reviewed the details of the procedure for conducting grit-blasting pretreatment. They concluded that the level of abrasion has to be balanced because excessive abrasion could lead to surface folding, which could trap moisture and weaken the adhesive bond. The surface morphology evaluation using the gloss meter or profilometry helps optimize the abrasion methods.

- Reflection-absorption infrared (RAIR) spectroscopy for irradiation pretreatment

  The excited gas streams that are generated by corona discharge [19], plasma [24], flame [2], or laser irradiation [28 and 29] modify the surface morphology and convert surface molecules into O- or N-containing functional groups. In addition to morphology-monitoring tools, including the gloss meter and laser profilometry, the treatment quality is assessed using RAIR [19 and 24]. However, this method can only roughly reflect the chemical conditions of the treated surfaces but not evaluate the density of the O- and N-containing groups, the valences of the surface atomic bonds, and the active layer thickness that dominate the formation of intermolecular covalent bonds and the strength and durability of the adhesive bonds.

- Quality monitoring and control methods for chemical pretreatments

  In chemical pretreatments, an adherend surface is modified by either chemical etching, anodizing, or coating (sol-gel, boehmite gel, coating primers). For any liquid phase chemical reactions, the stability and concentration of reagents are important factors affecting the adhesive bond strength and durability. Good process reproducibility can be achieved by using freshly prepared reagent solutions and by following validated SOPs. Dated or used reagent solutions often contain contaminants and less than optimal concentrations of chemicals. To avoid human errors in reagent preparation, Rider and Vodicka [42] suggested using prepackaged chemicals to make solutions.

To estimate the conversion or amount of the deposit layer on the adherend surface, a material balance analysis should be conducted after the chemical pretreatments. Rapid, economical, nondestructive online and in-field test methods should be developed to measure the thickness and composition of adherend surfaces. Electrochemical methods, such as capacitance/voltage profiler, surface resistance, or impendence [43], may meet the needs for surface chemistry inspection. However, none of these technologies has been validated for aerospace applications.

3.3 ADHESIVE APPLICATION CERTIFICATION.

The uniformity of the bondline thickness is very important for adhesive application practice. Hart-Smith [44] has showed that the adhesive shear stresses are nonuniform, with high shear stresses at the ends of an adhesive-bonded joint and a low shear stress in the center of the joint. In an adhesive bond with a nonuniform bondline thickness, the shear stress will transmit from areas with a greater bondline thickness to nearby areas with a smaller bondline thickness. The adhesives at these over-stressed areas tend to fail prior to the other parts of the adhesive-bonded joint. Thus, a quality control procedure should be in place to ensure the uniformity of the bondline thickness. Currently, two approaches are being used in manufacture and repair of bonded structures. The first is adding glass or alumina spheres into the adhesives [10 and 27]. The spheres will provide preset space for the adhesives to settle in. Studies have shown that glass spheres do not affect the initial bonding strength of adhesive-bonded joints. However, the impact of the glass spheres on the long-term durability is a concern, because the presence of the glass spheres results in moisture absorption [45]. The second approach involves using adhesive films, which are premade adhesive sheets that cure at elevated temperatures [37 and 39]. The use of adhesive film simplifies the application procedure and reduces potential human errors and should result in a lower level of variations.

3.4 BONDING CERTIFICATION.

Bonding is the final and critical step of the fabrication. It is required that the process be executed strictly according to the validated SOPs. Major factors that affect the bonding quality include curing temperature program, heat distribution, and bonding environment. A revalidation process is required for any, even seemly minor, changes to the operation parameters.

Mechanical properties of the epoxy adhesives are dependent not only on the test environment, but also on its thermal history. A thermoset adhesive, such as epoxy, has a glass transition temperature that varies with the degree of curing and water content. At the glass transition temperature, the mobility of the unreacted monomer molecules is drastically reduced. Therefore, the network of the adhesive will vitrify if the curing temperature is less than the ultimate glass transition of the completely cross-linked resin [46 and 47]. Lapique and Redford [47] reported that it took 28 days for an adhesive to cure completely at room temperature compared to 4 hours at 64ºC. Thus, an off-optimum thermal program (temperature and time) could affect bond quality and contribute to the susceptibility of the adhesive-bonded joint to moisture [48 and 49]. Unfortunately for most of the studies on bond durability, the effects of the adhesive curing parameters on durability were not emphasized.

A uniform temperature distribution during adhesive curing is as important as the heating program. Nonuniform heating will result in a nonuniform distribution of the bond strength and residual stresses and large bonding quality variations [3]. This is especially important for onboard repairs or for fabrication of large structures when curing in an oven is impossible.

A clean and dry environment for adhesive bond fabrication is also essential for minimizing product quality variations. It is suggested that moisture should be eliminated by vacuuming during the curing process to prevent water from being trapped at the interface between the adhesive and adherend [5 and 50]. For repair work at service depots where comprehensive environmental control is impossible, a positive-pressured clean and dry airflow should be maintained over the area where repairs are conducted.

Mechanical tests on coupons are important for evaluating the bond strength and validating the bonding process. The BWT is one of the widely used methods that evaluate the environmental durability of the adhesive-bonded joints [5]. To start the BWT, a 3 mm thick wedge is driven into an adhesive-bonded joint of a coupon and the coupon is then exposed to a hot and humid environment for 48 hours [42]. The initial crack length and the crack growth rate within 48 hours are measured.

The BWT seems to be a better method than the lap-shear test because the latter does not reflect bond durability under environmental influences [5]. However, the BTW does have a few limitations as a bonding certification method. First, the BWT results are, in fact, the accumulative effects of the previous process steps. It is difficult to evaluate the effect of a specific process step. Second, because the test duration is at least 48 hours, acquisition of the test results that are used to qualify or disqualify the adhesive bonds usually falls behind the production schedule. Finally, it is still an unanswered question whether the BWT results really correlate with the durability of the adhesive bonds under service conditions. Recently, a comprehensive BWT database has been established by the Royal Australia Air Force to find and verify the correlation between the BWT results and service performance of adhesive bonds [42]. A conclusive analysis can be carried out when a comprehensive database that reflects the service performances of the bonded structures world-wide is established.

3.5 TECHNICIAN CERTIFICATION.

The processes of adhesive bonding involve significant labor activities, which introduce variations due to human errors. The product quality could vary significantly even among workers using the same SOPs. Rider and Vodicka [42] have suggested that a technician certification program should be in place and use the BWT parameters as the criteria for technician certification.

One of the principles of quality management suggests that a systematic approach to the technician certification program should be implemented. Rather than to simply pass or fail a technician, the objective of a technician certification program is to uncover the best practice available for a given technician in a given fabrication environment and with given fabrication resources. The BWT parameters can be used to quantify the performance differences among the technicians and to identify a group of technicians with consistently better performances. The

production management should develop a mechanism that encourages information exchange among the technicians, so that the fabrication practice can be continuously improved. This will result in a significant reduction in product variations.

4. NATURE OF ADHESION AND ITS IMPLICATION TO SURFACE TREATMENT AND BONDING PROCESSES.

According to Lee [51], there are five types of adhesions: (1) mechanical adhesion—the interlocking of two materials at the joint; (2) diffusive adhesion occurs when molecules from two materials are mobile and soluble in each other and merge at the joint via inter-diffusion; (3) dispersive adhesion—holds two materials via van der Waals' forces or hydrogen bonds; (4) electrostatic adhesion—holds two conducting materials via electron exchange and electrostatic force at the interface; and (5) chemical adhesion—the strongest adhesion via formation of ionic or covalent intermolecular bonds at the joint.

The mechanism of electrostatic adhesion is not within the scope of the present discussion because almost none of the adhesives used in aerospace industry are electrically conductive. The mechanisms of mechanical and diffusive adhesions contribute to a significant portion of the overall adhesion. In many types of pretreatments, in particular, the mechanical pretreatment is often reported as being effective in increasing the total surface area, surface roughness, or surface tension. This allows the adhesives to readily spread out on the rough adherend surface and, hence, improves the interlock or interdiffusion between the adhesive and adherend. This also increases the total interface area available for development of intermolecular forces across the interface, such as van der Waals' forces, hydrogen bonds, and covalent bonds. Thus, the nature of intermolecular forces is the fundamental and dominant aspect of the overall adhesion.

Chemical adhesion and dispersive adhesion involve the formation of interatomic or intermolecular bonds across the interface between adherends and adhesives. The intermolecular bond strength or bond energy is measured by the amount of energy required to break the bonded atoms into independent atoms. Chemical bonds, such as covalent or ionic bonds, are strong intermolecular or interatomic bonds. Other intermolecular forces, such as hydrogen bonds and van der Waals' forces, are weak, long-range intermolecular interactions in comparison to the covalent bonds. The energy of these weak intermolecular forces is typically 1-2 orders of magnitude lower than that of covalent bonds (table 1). A great number of the weak intermolecular interactions may exist at the adhesive and adherend interface. Thus, the weak interactions may have a great impact on the macroscopic properties, such as friction, surface tension, viscosity, and adhesion [52], and may enhance the bond strength significantly. However, these weak intermolecular interactions are in the state of constant breakup and formation and, hence, are prone to the effect of the surface contamination and water ingress [53]. The fact that weak intermolecular bonds are prone to water ingress may explain why some adhesive bonds with high initial mechanical strength have insufficient durability [15 and 16].

Table 1. Energies of Interatomic and Intermolecular Interactions

Type of Bond	Energy kcal mol^{-1}
Single covalent bond	
O-H	110
P-O	100
C-C	83
C-O	84
C-N	70
Double covalent bond	
C=O	170
C=N	147
C=C	143
P=O	140
Hydrogen bond	
NH---O	
OH---N	4~5
NH---N	
OH---O	
Van der Waals' force	~1

Many types of surface pretreatments result in a layer of uniformly distributed active sites, as evidenced by a profile of O- or N-containing functional groups (anchor groups) near the surface. Lone electron pairs on O- and N-containing groups could be donated to acceptors (such as C-containing groups) to form covalent bonds. Because of abundant electron acceptors and anchor groups on the curing surface of adhesive, covalent bonds could link the adhesive and adherend together during adhesive curing (figure 3). These covalent bonds at the interfaces are the major load transfer mechanisms between the adherends. Organic and inorganic primers are small molecules that are able to penetrate porous and rough surfaces and serve as coupling agents, linking the adherend and adhesive through covalent bonds [34, 43, and 54]. The formation of covalent bonds can be enhanced by applying primers or adhesion promoters.

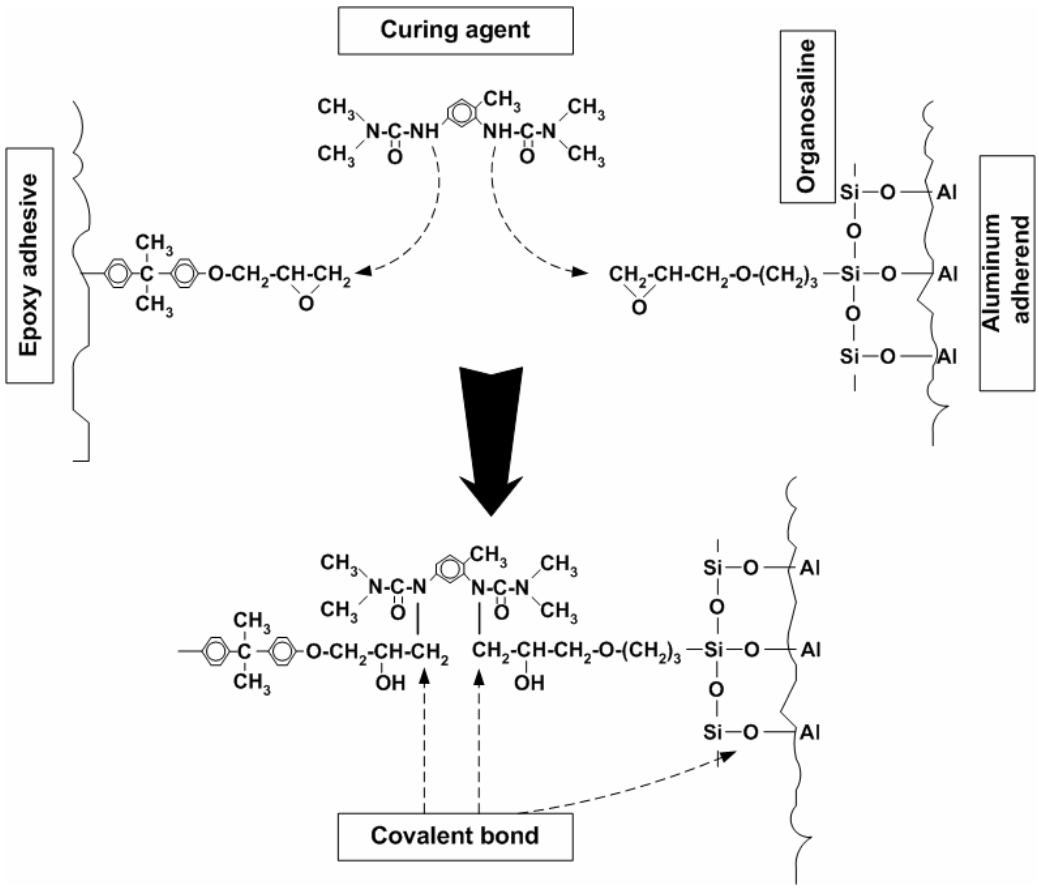

Figure 3. Covalent Bond Formation Between Adherend and Adhesive

Adhesive-bonded joints based on covalent bonds are less susceptible to the effect of the surface contamination or water ingress due to high bond energies of covalent bonds (table 1). Olsson-Jacques, et al. [55], studied the effects of Jet-A1 fuel on the durability of epoxy adhesive bonds with aluminum adherends. They found that hydrocarbon contaminants affect bonding strength only before the formation of covalent bonds between a primer and the substrate. The application of the primer on the substrate resulted in a much better bond durability in comparison to an adhesive-bonded joint made without using a primer. Rider and Arnott [41] compared the effects of different primers against the water ingress to the bonded epoxy-aluminum joints. Their results indicated that water ingress was retarded by forming dense covalent bonds between the adhesive and substrate with a silane primer as the coupling agent.

Organiosilanes are widely used as primers or coupling agents to improve hydrolytic stability of adhesive bonds [56]. Rider, et al., [7, 40, and 57] developed a surface pretreatment plan with proven in-service records. Briefly, their procedure included the following steps:

1. Aluminum surfaces are first activated with mechanical blasting, alkaline etching, and acid cleaning, so that a dense thin layer of aluminum oxide covers the surface.

2. The activated surfaces are treated with organosilane solutions at pH 5.0. Organosilane hydrolyzes and reacts with aluminum oxides to form covalent bonds (figure 3). The introduced epoxy groups on the adherend surface are similar to those in the adhesives.

3. The adhesive is allowed to cure and form strong covalent bonds that link the majority of the epoxy end groups and make a strong and durable adhesive bond (figure 3).

The formation of metal oxygen silicon (metal-O-Si) and carbon nitrogen carbon (C-N-C) covalent bonds during the fabrication processes (figure 3) was confirmed by FTIR, XPS, and SIMS studies [39, 41, and 58-61]. Among these studies, Rattana, et al. [39], provided the most convincing evidence using a SIMS technique that identified many ion fragments with the original covalent bond structures.

4.1 CLEANLINESS VERSUS NATURE OF INTERMOLECULAR BONDS.

The impact of prebond preparation on strength and durability has been reviewed by a number of researchers [62-66]. The composition and properties of adherend surfaces differ from the bulk materials because of the presence of adsorbed contaminants, different oxidation and hydration states, and segregated alloying or curing elements [31 and 67-68]. For example, the surface of a metallic adherend consists of a segregated layer, an oxide/hydroxide layer, and adsorbed contaminants [30]. It has been recognized that without removing the loosely adsorbed layers, a durable adhesive-bonded joint cannot be formed [7]. For composite adherends, the contaminants left behind after removing the peel-ply and moisture are the major causes of low-strength adhesive bonds. However, although cleanliness is very important for forming high-strength adhesive bonds, it should not be the only goal of a surface preparation procedure.

The manufacturers emphasize the importance of cleanliness during the surface pretreatment process [3]. As a result, a majority of pretreatment plans reported in the literature emphasized a clean surface as the primary requirement for adherend (metal or composite) surfaces [69]. However, it appears that a clean surface is not sufficient for high durability [3]. Service records show that the strength and durability of the composite adhesive bonds that were prepared using peel-ply or tear-ply methods varied considerably. Some have superior durability, while others fall apart shortly after the bonding process [5]. The peel-ply or tear-ply method followed by grit blasting and solvent wiping provides a dust-free, clean surface, but does not guarantee a chemically activated surface that allows formation of strong interatomic or intermolecular bonds [4]. Hart-Smith [5] and Davis and Bond [1] were among the first to recognize that, rather than to seek a clean surface, the major goal of a pretreatment procedure is to activate the adherend surface, thereby forming strong intermolecular and interatomic bonds. Therefore, a clean surface is merely a necessary, but insufficient, condition for forming a durable adhesive bond. In practice, a surface pretreatment procedure should include an initial cleanup step followed by a surface activation step [5].

In a frequently quoted report, Emerson, et al. [69], tried to answer the question “How clean is clean?” when studying the surface hexane distribution after various solvent-cleaning procedures. Similar to the results given by Olsson-Jacque, et al. [55], Emerson’s results indicated that the hexane distribution was also nonuniform on the surface and the contaminated areas were covered

by approximately a single layer of contaminates. Emerson, et al. [69], characterized the effects of contamination by measuring the "work of adhesion" between incompletely cured adhesive and adherends using a Johnson-Kendall-Roberts (JKR) apparatus. Although the contaminants significantly reduced the surface adhesion as measured with the JKR apparatus, no measurable effect in the bond strength was found after the hexane-contaminated surface was bonded with an epoxy adhesive that was fully cured. Emerson, et al., did not provide an explanation on this finding. In a similar study, Woerdeman, et al. [53], found that the existence of hexadecane contamination reduced the adhesion between epoxy and the aluminum surface, as measured by the JKR apparatus. However, the authors were unable to correlate the reduced adhesion with the bond strength.

From a manufacturers' viewpoint, it is important to understand the impact of solvent cleaning to bond durability, because overcleaning increases operational costs and waste. In fact, evidence suggests that the effects of contaminants are less serious than previously thought. For example, dipping aluminum adherend into Jet-A1 fuel just before applying adhesives had little effect on bond durability [55]. Rider, et al. [54], also reported that bond durability was only moderately affected by the application of aviation kerosene to the grit-blasted aluminum surface. A possible explanation is that the uncured epoxy adhesives absorbed the small amount of surface hydrocarbon contaminants [70], due to the hydrophobic nature of epoxy structures. The hydrocarbon contaminants tend to stay in the adhesives, not in the interfacial areas of an adhesive bond. The effect of hydrocarbon contaminants is less than that of water and other inorganic substances. The mechanism of this phenomenon is similar to eliminating oily wastes on dishes with detergents. A reasonable conclusion is that the adhesive bond durability will be affected by oily contaminants only if the hydrocarbon-holding capacity in the epoxy adhesives is reached. Because the holding capacity of a detergent correlates with the size of the molecules to be dissolved, a poor bond durability is expected when large hydrocarbon molecules are present on the surface. Rider, et al. [54], found that the bond durability was affected significantly when more waxy hydrocarbons (C_{16}+) were applied on the surface, while liquid hydrocarbon (C_{16}-) had little effect.

When grit blasting primer-epoxy adhesive with silane particles during the pretreatment procedure, bond durability may be affected when hydrocarbon contaminants are introduced. Olsson-Jacque, et al. [55], and Rider, et al. [54], showed that if hydrocarbon contaminates were introduced before applying organosilane on the surface, the formation of covalent bonds was interrupted, which subsequently reduced the bond durability. However, hydrocarbon contamination has little effect on the bond durability if organosilane was applied on the aluminum surface before the hydrocarbon contaminates were introduced.

4.2 SOURCES OF MOISTURE AND IMPACT OF MOISTURE.

Most of the in-service bond failures were associated with moisture-induced corrosion or degradation [3]. Durability of an adhesive-bonded joint can be affected by water ingress before and after the formation of the adhesive bond joint. Moisture may enter the adhesive bond joints from the environment by diffusion through the bulk adhesives or along the adhesive-adherend interface during the fabrication process and during their service lives [45 and 71]. Water ingress leads to increased coefficient of thermal expansion [45] and plasticization [71] of the bulk

adhesives. At the interfaces, water weakens adhesion by increasing the hydration of surface oxides [71]. To assess the impact of water ingress, an accelerated version of the BWT was used [41 and 72]. The BWT measures the performance of adhesive bonds at relatively high humidity and temperature after a crack is initiated via a wedge insertion at the bond interface. BWT results showed that adhesive bond joints produced with hydration inhibitors, such as organosilanes, were resistant to water attack due to the formation of cross-linking covalent bonds.

Prebond water content in the materials is another major source of moisture that affects bond durability. Armstrong [4] compared the durability among adhesive bond joints built with carbon fiber-reinforced polymer composites with various prebond moisture contents. Armstrong found that only the initially dry laminates that were treated with an additional prebond drying step gave the best durability (cohesive failure). Based on many years of composite materials experience, Hart-Smith [5] emphasized that prebond moisture should be thoroughly removed before conducting any pretreatment work. Many other researchers also discussed the effects of moisture on the strength and durability of adhesive joints and bonds for composite materials [1 and 73-78].

On aluminum surfaces, prebond moisture could exist as part of aluminum hydroxides or hydrated alumina. According to Sato [79], coarse and fine aluminum trihydroxide particles (in particular, bayerite or gibbsite) undergo dehydration at various temperatures. A thermal analysis of bayerite showed the loss of water associated with the transformation of aluminum hydroxides started at temperatures as low as 70ºC [80 and 81], and the release of water was as much as ~30% of the initial weight at 250°C [82]. No report was found that characterized the "oxide layer" produced during anodizing or etching treatments. The forms of the oxide layer were believed to be alumina hydrates [43] and hydroxides [33]. These physically or chemically bonded water molecules were released once the curing cycle started at even moderate temperatures, according to

$$2Al(OH)_3 \rightarrow Al_2O_3 + 3H_2O \qquad (1)$$

The released water was then trapped at the adhesive-adherend interface and resulted in poor bond durability [33, 83, and 84]. The prebond moisture on the aluminum surface had a profound impact on the durability of adhesive-bonded joints during the fabrication process and service. If a low adhesive curing temperature was used during the fabrication process, very little water could have released or condensed at the interface, and the adhesive-bonded joints would appear to be strong and durable, because the BWT is normally conducted at less than 70ºF. However, in the commercial aircraft service environment, the aircraft skin temperature could reach well over 180ºF, depending on the color of the paint, the intensity of sunlight, and flight speed, which may lead to water release at the interfaces and consequent failure of adhesive bond joints.

5. TECHNOLOGIES FOR BOND INTEGRITY AND SURFACE ANALYSIS.

Traditionally, destructive tests such as lap shear and BWTs have been used to determine bond strength. These tests are effective for gauging the properties and strengths of a particular pretreatment or adherend-adhesive composition, but these tests are destructive and cannot

provide an online, in-field evaluation of the prebonding adherend surfaces. Other NDI methods are being used in aircraft manufacturing processes and are discussed in sections 5.1 through 5.9.

5.1 CONTACT ANGLE METHOD.

The well-known Young Equation [82, 85, and 86]

$$\gamma_{sv} = \gamma_{sl} + \gamma_{lv} \cos\theta \tag{2}$$

represents the equilibrium established by a sessile drop on a solid surface. The contact angle shown in figure 4 is defined by the tangent of the drop at the triple point between solid, liquid, and vapor, and by the free energy of the solid substrate, γ_{sv}, and the interfacial free energy of the liquid and solid, γ_{sl}. The surface free energy, or surface tension, of the liquid, γ_{lv}, will be known and θ provides a readily observed manifestation of the interaction of a liquid with a solid. Thus, if water is considered as the wetting liquid, a high-surface energy substrate, such as an oxide, will wet fairly readily.

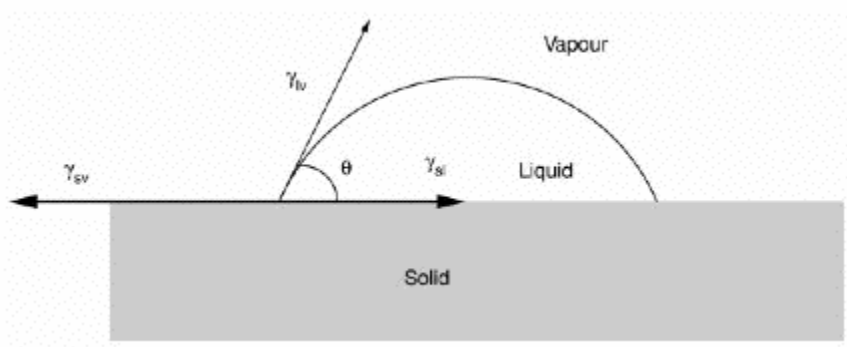

Figure 4. Thermodynamic Equilibria of a Sessile Liquid Drop on a Solid Substrate

5.2 NEUTRON RADIOGRAPHY.

Neutron radiography (NR) is one of the most commonly used nondestructive (ND) methods for inspecting adhesive joints in aircraft structures (figure 5) [81]. Its principle is similar to X-ray radiography. The difference is X-rays interact with the electron cloud surrounding the nucleus of an atom, and neutrons interact with the nucleus itself. NR can find moisture and corrosion in typical honeycomb structures and hydration in a composite or adhesive layer. However, voids, cracks, and damage in honeycomb sections can be found using X-radioscopy. For structural inspections, NR is still not widely used compared to X-radiography and other ND methods, primarily because of its high cost and special requirement for neutron sources. Applications have been limited to when less expensive test methods were unsuccessful and when objects were transportable to stationary neutron sources [87 and 88].

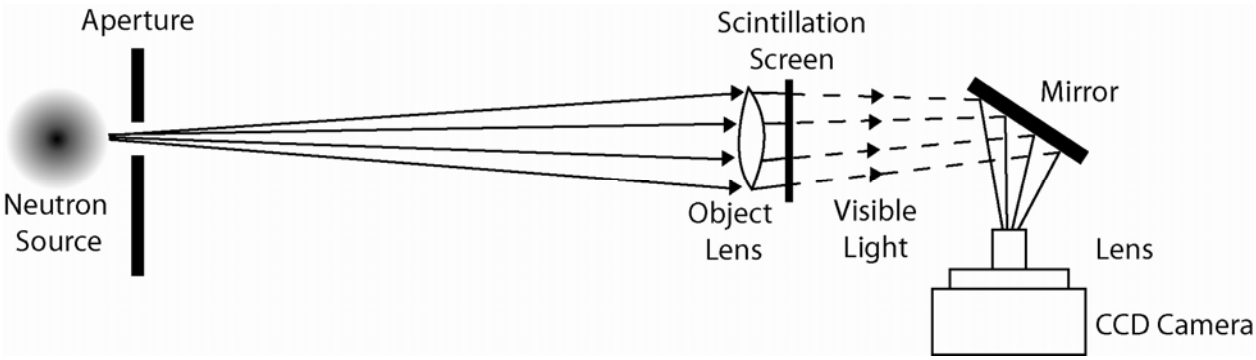

Figure 5. Basic Components of an NR System

5.3 X-RAY AND GAMMA RAY.

X-radiation [82] (figure 6) is a quantitative spectroscopic technique that measures elemental composition. XPS are obtained by irradiating a material with a beam of aluminum or magnesium X-rays while simultaneously measuring the kinetic energy and number of electrons that escape from the top 1 to 10 nm of the material being analyzed. XPS requires ultra-high vacuum conditions. It detects all elements between Z = 3 to Z = 103, but it cannot detect hydrogen or helium. A recent development of this technology is the micro-focus X-ray tubes that have become more prevalent in field ND applications. Imaging resolutions between 5 and 20 mm are now achieved in radioscopy or tomography [89]. Stability in size and position of the focal spot becomes a critical factor for the reliability of the evaluation procedure.

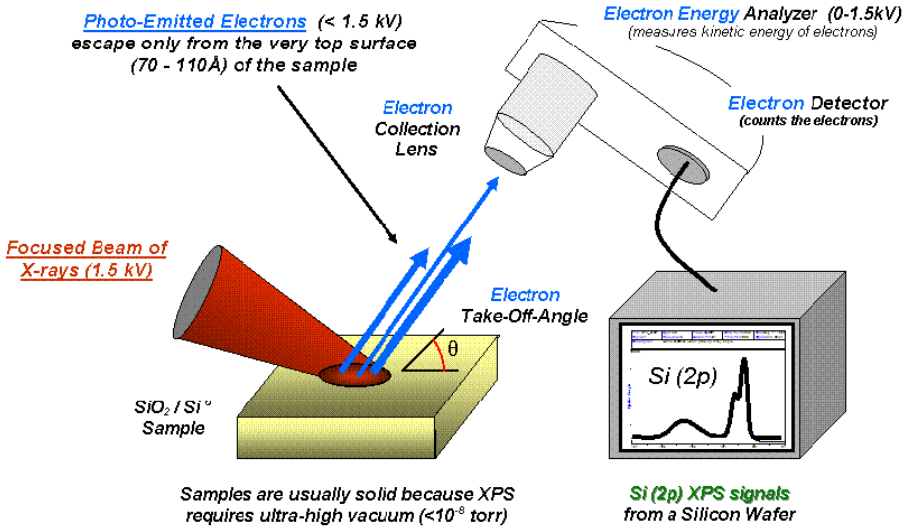

Figure 6. Basic Components of a Monochromatic XPS System

5.4 NEAR INFRARED.

It is possible to analyze the complex reflection spectra of near infrared (NIR) waves to determine the quality of an adhesive bond. The general setup for this kind of transflectance measurement is shown in figure 7. Generally, the incident light passes through the sample of interest, reflects off an aluminum plate, and then travels back through the sample before reaching the detector. Tomlinson, et al. [83], used optical fibers to fire light at a specimen, which had an aluminum plate placed behind it, as shown in figure 7. There were problems penetrating thick parts and assemblies and the resolution was poor. In contrast, because infrared rays are harmless to living bodies, the increasing applicability of infrared thermography [90] has caused developments of remote-sensing diagnosis for many engineering applications.

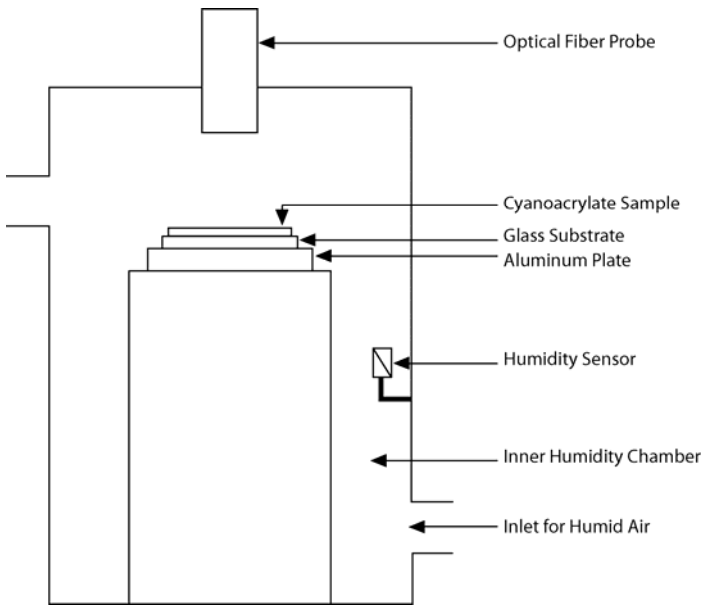

Figure 7. Basic Components of an NIR System

5.5 NONLINEAR ULTRASOUND.

Nonlinear ultrasound (NLUS) uses a high-amplitude ultrasonic wave that causes a local mechanical deformation of a sample and leads to nonharmonic components in the transmitted ultrasonic pulse, which are detected as overtones by the Fourier analysis. With rising ultrasound amplitude, the nonlinear deformation range in the adhesive metal bond is reached first in the weakest region of the adhesive polymer. Bockenheimer, et al. [84], investigated the possibilities of inspecting structural adhesive bonds using ultrasound waves. Figure 8 shows a simplified overview of the setup. With recent electronic device developments and computer simulation techniques, this method can detect multiple flaws with various depths in composite and metallic materials [91-93]. The resolution is approximately 1 mm.

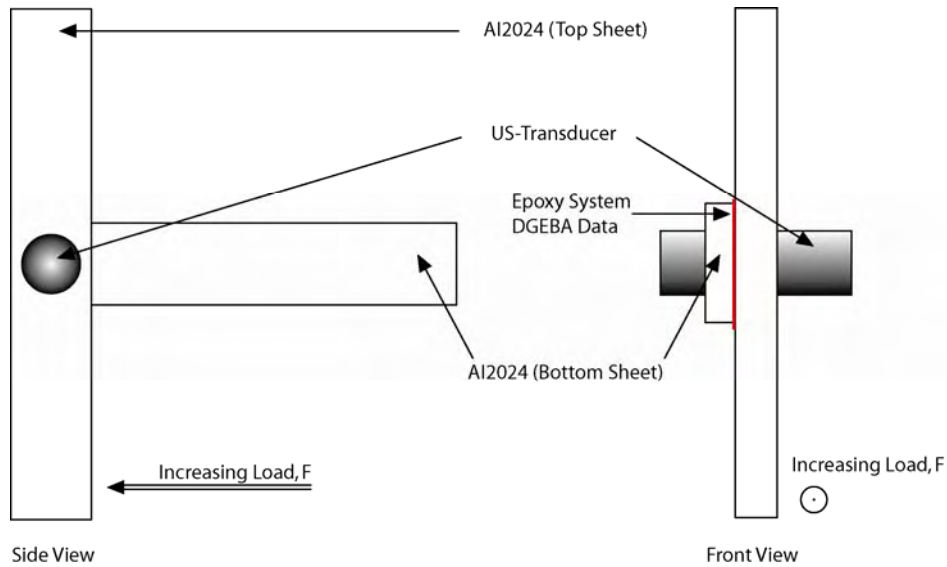

Figure 8. Basic Components of an NLUS System

5.6 TRANSIENT OR PULSED THERMAL NDT.

Active thermography [94] thermal imaging, or thermal video, is a type of infrared imaging (figure 9). Thermographic cameras detect radiation in the infrared range of the electromagnetic spectrum (roughly 900-14,000 nanometers or 0.9-14 µm) and produce images of that radiation. Since infrared radiation is emitted by all objects based on their temperatures, according to the blackbody radiation law, thermography makes it possible to see one's environment with or without visible illumination. In the active approach of the thermal NDT, pulsed thermography and pulsed phase thermography are widely used approaches for investigating composites and metallic structures [95]. Depending on the materials, the resolution of the technology is from 3 to 10 mm. This method cannot detect weak bonds that have an interface area several nanometers thick.

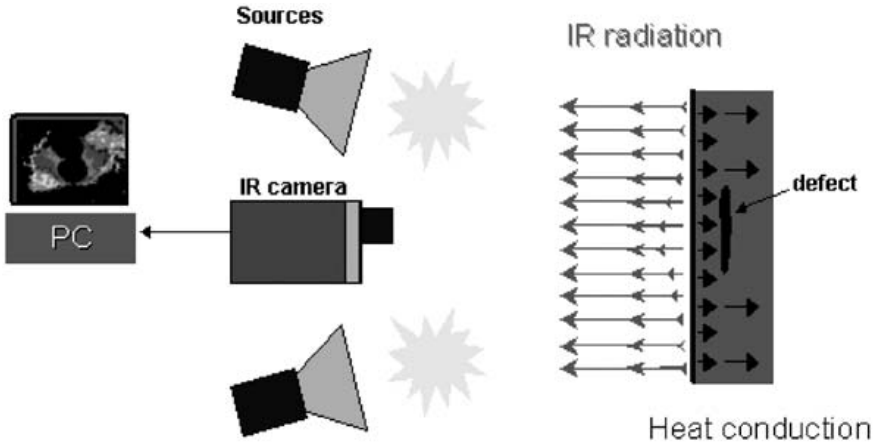

Figure 9. Active Approach in Thermography

5.7 ELECTRICAL POTENTIAL DROP TECHNIQUE.

In the DC potential drop technique [96], a constant DC current is passed through a specimen. The electrical voltage or potential drop, *V*, is measured across the crack mouth and is related to the crack length. The electric potential across the crack mouth can be related to the unbroken crack ligament resistance, *R*, through Ohm's law:

$$V = IR \tag{3}$$

I is the current. For the specimen shown in figure 10, the cross-sectional area of the specimen can be calculated from the measured resistance. With respect to a crack through a material of uniform thickness, the change in uncracked length can be calculated from

$$L = L_0 \frac{R_0}{R} \tag{4}$$

L_0 and R_0 are the initial crack length and resistance of the uncracked ligament, respectively. This method is widely used in ND detection of defects and cracks in metallic structures, including weld/bond joints [97-100]. Significant progress has been made in terms of the resolution, precision, and applicability. Essentially, the size and position of multiple small cracks or defects can be determined with an efficient coupling between the detectors, data acquisition, and analytical software based on a finite element computational method. However, this method is difficult to apply to composite and polymer materials.

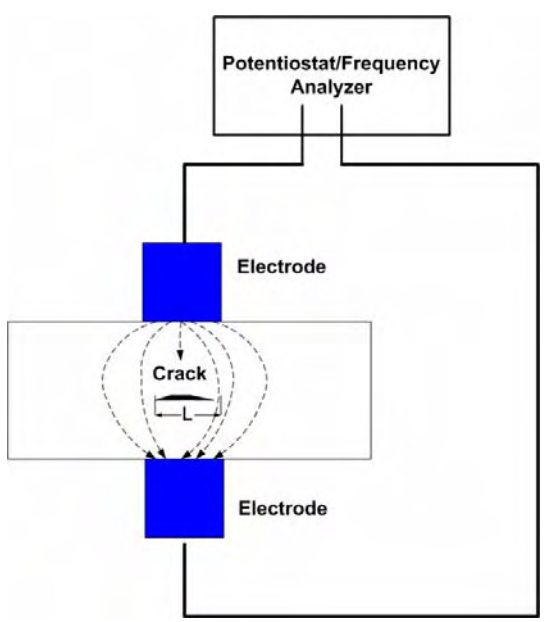

Figure 10. Schematic Setup for DC Potential Drop Measurement

5.8 ELECTROCHEMICAL-SENSING TECHNIQUES.

Electrochemical-sensing technology includes a variety of devices based on conductimetry, polarization measurement, cyclic voltammetry, electrochemical impedance spectroscopy (EIS), or electrochemical noise analysis (ENA). Electrochemical-sensing technology needs a small input energy density (<0.1 mW cm^2) [101 and 102]. Many electrochemical humidity sensors are based on conductimetry. One of the most promising sensor designs for water moisture detection is a four-probe electrochemical cell that uses water-sensitive conductors, such as carbon powder, to conduct electrons and a polymer electrolyte [103] to conduct protons. Furthermore, EIS and ENA technologies have been used to detect water ingress or accumulation at the interfaces between polymer and metallic components [101 and 102]. Exploiting that atoms and molecules are oxidized at specific voltages at specific reaction rates, stripping electrochemical sensors (SES) allow for a spectral analysis that provides the composition and the quantity of surface contaminants. Despite their proven usefulness, these classical electrochemical sensors with liquid electrolytes are usually bulky and awkward. Moreover, leakage of the electrolyte may corrode the device and contaminate the composite component. In addition, traditional electrochemical sensors cannot be used to analyze the surfaces of inert polymer materials, including polytetrafluoroethylene (PTFE), acrylics, and epoxies.

A possible electrochemical method that can be used to chemically analyze a polymer or composite surface is the solid-state electrochemical cell. These cells contain an electrode doped with mediators, which consist of molecules that can be quickly oxidized and reduced. Although electrochemical cells with liquid electrolytes have been studied [32], the concept of a solid-state electrochemical cell is novel. In these liquid electrolyte electrochemical cells, oxidation and reduction can be imposed, not only on metallic surfaces, but also on polymers. The current density on a specific polymer surface can serve as an indication of the extent of the oxidation and reduction reactions and, hence, the activity of the polymer surface. Based on the principles of the liquid electrochemical cells, it may be possible to design a solid-state electrochemical cell. When active functional groups or contaminants are present on the surface of a sample in contact with the solid-state electrochemical cell electrode, the increase in current can be recorded for unique ranges of potential. Thus, the chemical condition, nature, and level of contamination of the surface may be detected.

5.9 ATOMIC FORCE MICROSCOPY.

AFM is a useful tool for characterizing the topography and material properties of solid substrates. AFM uses a sharp probe to scan across the substrate surface. As the probe scans, inter-atomic van der Waals' forces act between the substrates and the probe tip. These interactions are monitored by position-sensitive detectors, depicting maps of the material topography and other surface properties such as adhesion, mechanical, electrical, and magnetic properties. Figure 11 shows the operating principles of AFM. AFM can be operated in three different modes: contact, noncontact, and tapping mode. The various images available from AFM include topography, friction, deflection, and phase images. AFM offers the functionality of operating in various environmental conditions, including with or without a vacuum and in a dry or fluid cell.

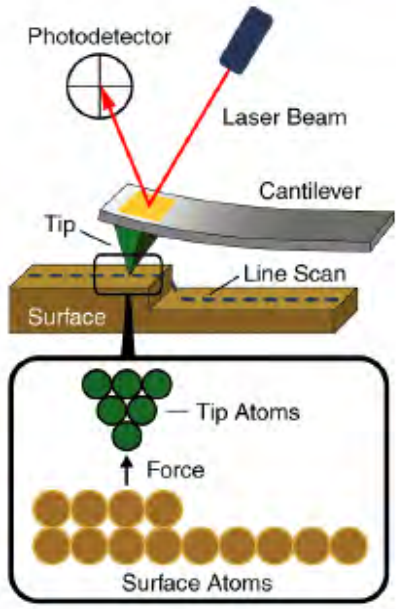

Figure 11. Operating Principles of the AFM

AFM can create an image of almost any type of sample, e.g., polymer, composite, ceramic, metal, or biological samples. Rarely were examples of AFM use on composites found in the literature. The examples that were found in this review cover a wide spectrum and are briefly described in this section.

To demonstrate that lithography can be successfully used on composites, Yanchun Han, et al., conducted nano-scratch and nano-indentation tests on carbon fiber-reinforced polyetheretherketone (PEEK) and PTFE composites with AFM. These tests showed that carbon fiber is harder and more scratch-resistant than graphite, PEEK, and PTFE [104]. Gao and Mäder conducted comprehensive research on the surface topography of fibers coated with protective sizing and local mechanical property variation in the interphase region of e-glass fiber-reinforced epoxy resin and modified polypropylene matrix composites using tapping mode, phase imaging, and nano-indentation tests [105]. Gao, et al., observed a distinct geometric interface between finished carbon fiber and epoxy resin in the topographical image and in the three-dimensional indentation contact stiffness map using AFM [106]. Ying Wang and Thomas H. Hahn performed AFM on carbon fiber-reinforced polymer composites to characterize interfacial properties when subjected to hygrothermal treatments [107]. F. Tian, et al., studied the morphology of in situ polycondensation of microcomposites using AFM. The results suggest that the polymerization time and matrix solvent could greatly influence the morphology and properties of microcomposites [108].

In recent years, there have been great advancements with AFM, not only in detecting topographic images, but also measuring the force between the AFM tip and the substrate surface. These measurements can also provide unique, localized chemical and physical information about the sample surface on a nanometer scale, which could not readily be obtained by other techniques [109]. By using the force-distance curve [110], one can directly measure the surface

force, elasticity, friction, and adhesion, which are dependent on the probe, contact surface, and surrounding medium. When the AFM tip withdraws from contact with a sample surface, an adhesion force develops between the tip and the sample. In the absence of capillary forces (for example, in liquid media), the adhesion force could arise from chemical bonds between the tip and sample surfaces [111]. Analysis of the adhesion forces can produce localized chemical information about the sample-liquid interface, such as the nature of the surface functional groups. Aleksandr Noy, et al., calculated the adhesion force between distinct functional groups, in organic solvents, aqueous solution, and in inert dry atmosphere [112]. The results suggest that the friction forces between modified tips and samples were found to be chemically specific.

6. PROMISING ANALYTICAL CHEMISTRY METHODS FOR FUTURE STUDY.

It is clear that all existing analytical methods have their limitations. No technique can provide in-field surface contamination detection for prebond surfaces. As a result, no method satisfies the need for online and in-field surface chemistry analysis. Because of the lack of in-field surface chemistry analysis methods, the aviation industry relies on complicated and tight procedure controls to ensure the quality of the pretreated surfaces. This involves a number of SOP and certifications, including composite material, adhesive, equipment, procedure, environment, and technician certifications. Without a definitive surface chemistry analysis method, the SOPs and certifications may result in excessive efforts and costs or insufficient quality of the prebond surface. The advantages and disadvantages of the NDT and NDI methods, as for surface chemistry analysis, are listed table 2.

Table 2. Advantages and Disadvantages of NDT and NDI

Method	Advantage	Disadvantage
Contact angle	Easy to apply and can detect surface energy	Cannot detect surface contamination
Neutron radiography	Detect surface contamination	Bulky and complex equipment
XPS	Detect surface contamination	High vacuum needed
NIR	Less complex system	Poor resolution
NLUS	Detect voids and cracks	Cannot detect surface contamination
Thermography	Rapidly evaluates large area, data highly interpretable	Cannot detect surface contamination
Electrical potential	Analyze metal/composite bonds with a simple device	Cannot detect surface contamination
Electrical chemical-sensing techniques	Analyze surface chemistry on metal/composite with a simple device	Needs technological validation
Atomic force microscopy	Detect surface contamination via changes in surface activity	Needs technological validation

Adherend surface preparation is critical to the structural integrity of bonded structures. Inadequate surface roughening, possible chemical contamination on peel ply, released fabric and released film, and surface water moisture result in poor adhesion, i.e., a weak bond between the adhesive and adherend, and reduced long-term durability [62-67]. The problems with chemical contaminations from peel ply, release fabric, and release film that prevent adhesion of the adhesive to the substrate are now fairly well known. What is far less understood is the adverse influence of prebond water moisture that is unavoidable during manufacture, repair, and service. Water inclusion in prebond adherends could affect short- or long-term strengths of adhesive bonding, depending on how fast the diffusion and accumulation processes are [74-78]. As presented at an FAA meeting on bonding structures, water moisture is claimed as one of the most adverse factors in the adhesive-bonding process [76]. The prebond surface preparation is acknowledged as the most important factor in the adhesive-bonding process. Solvent wipe, grit blast, peel-ply, and gas plasma treatments are the common practices of bond surface preparation. As the term suggests, the peel-ply practice employs tear films. The tear film remains in place until the adhesive is applied. It is then removed together with surface contaminants. However, the peel-ply process may introduce release agents that again reduce bond adhesion to the bond surface [62-64].

Current adhesive-bonding quality assurance practice relies on tightened surface preparation process control and mechanical tests on bonded specimens and NDI after bonding [62-64]. The mechanical test methods used by the aircraft manufacturers to assess individual bonded panels are based on component or coupon test pieces, representing the bonded structure and routine standard shear and peel test pieces. Many of these tests have been based on ASTM D 1002 lap-shear strength tests and ASTM D 1876 peel strength tests, although it is claimed [1 and 62-64] that the BWT is the most appropriate test for evaluating surface preparation, i.e., ASTM D 3762. In addition to the stress-based methods mentioned above, fracture mechanics and fatigue approaches have been developed and used to evaluate the strength and environmental durability of bonded structures [77 and 78]. One of the major drawbacks of these mechanical test methods is that they are carried out on small specimens, not on the actual prepared bonding surface. As such, these tests have been found to be inadequate to ensure bond quality. A number of NDI methods, including conventional ultrasonic techniques, oblique incidence ultrasonic technique, Lamb waves, sonic vibrations, spectroscopic methods, acoustic emission, thermal methods, radiography, and optical holography, have been used to detect defects in adhesive-bonded structures [1, 62, and 64]. While these NDI tests will eliminate bonds with obvious defects and cracks, they do not provide assurance of bond strength and long-term durability. Good bond quality must be obtained by managing all aspects of the bonding process during production. Thus, in the absence of a definitive surface quality-control method, laborious and sometimes inadequate measures are used to ensure the quality of adhesive bonding, thereby creating an undue expense on an otherwise economic manufacturing process.

XPS, ion-scattering spectroscopy, Auger electron spectroscopy, SIMS, X-ray fluorescence spectroscopy (XRF), FTIR, and scanning probe microscopy are commonly used as surface contamination evaluation methods [1]. Recent technical developments have enabled a number of portable chemical analysis technologies, including portable XPS and XRF. Although these portable chemistry spectroscopy methods can provide definitive information about composition, structure, and quantity of surface contaminates, like the mechanical tests, they cannot be

conveniently employed for chemistry analysis on the actual bonding surface areas of large components. Contact angle method [82, 85, and 86] has been employed for field surface analysis; however, it does not quantify the surface chemical composition. Industry has found that these methods are inadequate to determine whether the actual component surface preparation is acceptable. This calls for a convenient, definitive method to detect the contaminants and moisture on prebond adherend surfaces.

6.1 ELECTROCHEMICAL SENSOR.

Electrical chemical-sensing techniques can impose an oxidation/reduction reaction on the surface of a polymer/composite material. The reaction rate may be measured with current in a unique potential range. An analysis of the current level and range of potential may provide a measurement of the chemical composition of the solution in contact with the electrodes. Mediated electrochemical reactions have been previously studied. The applications of the mediated electrodes were also used for monitoring chemistry of liquid solutions [113-116]. The potential for mediated electrodes being used for monitoring surface chemistry of a solid material has not been reported in the literature. However, Brewis and Dahm [32] reported that solid polymer materials could be oxidized or reduced in electrochemical reactions in a liquid electrolyte containing mediators. It is then envisioned that with a revised electrochemical cell structure, a mediated porous electrode containing a solid-state electrolyte and mediators can enable electrochemical reactions at the interface between the electrode and a polymer or composite specimen under a polarization potential [117]. Because the rate of the electrochemical reactions and the potential at which a peak current can be obtained are functions of the surface chemistry (functional groups, moisture, and contamination), the rate and potential can serve as indications of a specific surface chemistry or a level of contamination. Thus, potential future work may focus on selecting chemical compounds as mediators, combining the compounds into a solid-state electrolyte, and fabricating a porous electrode containing the mediators and a solid-state electrolyte. An all solid-state electrochemical cell may then be fabricated and tested while in contact with the polymer, composite, and peel-ply samples. Once the concept of the all solid-state electrochemical sensor is demonstrated as a viable approach for surface chemistry analysis, the technology will be further advanced to achieve high sensitivity, low noise level, high reproducibility, and high portability. It is anticipated that the new electrochemical cell structure and the data acquisition methods and systems will be evaluated and optimized. The goal for such a study would be an all solid-state electrochemical sensor that is very sensitive, portable, durable, easy to use, and above all, suitable for in-field inspection of the contamination level of a prebond adherend.

6.2 ATOMIC FORCE MICROSCOPY.

AFM has the capability of determining the surface activity of various surfaces. Recent advances of modified tip probes provide an opportunity to further investigate the potential of AFM and its ability to determine changes on surfaces with respect to specific chemical function groups. Composite surfaces offer an exceptional challenge for AFM in that the topography of the surfaces makes it difficult to obtain images and data. The surface roughness typically generated by the peel ply on the matrix consists of peaks and valleys, potentially making it difficult for the AFM probe to scan.

The evaluation of AFM as an analytical instrument for studying composite surface bonding preparation will involve the investigation of a number of parameters. Various probe geometries can be evaluated to determine the optimal tip to scan the rough geometries. In addition, the probe tips can be modified with various function groups. Modification of the tips can be investigated to determine which functionalized tip would be optimal to determine changes in surface activity and detecting various contaminations. Ultimately, trials would need to be conducted in which composite surfaces were contaminated with known materials and quantities to determine which of the aforementioned probe tips can detect changes in surface activity at a quantifiable level. The AFM is known for providing optical images on a nano-scale. Although these images can be useful from a qualitative point of view, other options need to be considered to provide data that is more quantifiable. This may be possible using the force spectroscopy measurements with the AFM. Force spectroscopy provides the adhesion forces between the probe tip and the substrate at a specific location and may be used to quantify changes in functional groups or surface activity on a surface [106].

7. REFERENCES.

1. Davis, M. and Bond, D., "Principles and Practices of Adhesive-Bonded Structural Joints and Repair," *International Journal of Adhesion and Adhesives*, Vol. 19, Nos. 2-3, 1999, pp. 91.

2. Critchlow, G.W. and Brewis, D.M., "Review of Surface Pretreatments for Titanium Alloys," *International Journal of Adhesion and Adhesives*, Vol. 15, No. 3, 1995, pp. 161.

3. Molitor, P., Barron, V., and Young, T., "Surface Treatment of Titanium for Adhesive Bonding to Polymer Composites: A Review," *International Journal of Adhesion and Adhesives*, Vol. 21, No. 2, 2001, pp. 129.

4. Armstrong K.B., "Effects of Absorbed Water in CFRP Composites on Adhesive Bonding," *International Journal of Adhesion and Adhesives*, Vol. 16, No. 1, 1996, pp. 21.

5. Hart-Smith, L.J., "A Peel-Type Durability Test Coupon to Assess Interfaces in Bonded, Co-Bonded, and Co-Cured Composite Structures," *International Journal of Adhesion and Adhesives*, Vol. 19, No. 2, 1999, pp. 181.

6. Jensen, M.K., Love, B.J., Grant, J.W., Cotton, J., Keiser, J.R., and Wilson, D.F., "Comparison Study of Dicyandiamide-Cured Epoxy Bonded Steel Joints and Polyamidoamine-Cured Epoxy Bonded Steel Joints," *International Journal of Adhesion and Adhesives*, Vol. 20, No. 6, 2000, pp. 437.

7. Rider, A., "Bond Durability of Grit-Blast and Silane Treated Metallic Adherends Bonded With Room Temperature Curing Adhesives," DSTO Report DSTO-TR-1187, 2001, pp. 50.

8. Critchlow, G.W. and Brewis, D.M., "Review of Surface Pretreatments for Aluminum Alloys," *International Journal of Adhesion and Adhesives*, Vol. 16, No. 4, 1996, pp. 255.

9. Turner R.H. and Boerio, F.J., "Molecular Structure of Interfaces Formed With Plasma-Polymerized Silica-Like Primer Films: Part III. Mechanical Strength and Environmental Durability of the Primer/Aluminum and Primer/Titanium Interfaces," *The Journal of Adhesion*, Vol. 78, No. 6, 2002, pp. 495.

10. Brewis, D.M. and Critchlow, G.W., "Locus of Failure of T-Peel Joints Formed Between Aluminum and Various Adhesives," *International Journal of Adhesion and Adhesives*, Vol. 17, No. 1, 1997, pp. 33.

11. Scholtes, P.R., *The Leader's Handbook*, McGraw-Hill, New York, 1998, pp. 415.

12. Kingery, C., *The Six Sigma Memory Jogger II*, GOAL/QPC Press, Salem, New Hampshire, 2002, pp. 162.

13. Baldan, A., "Adhesively-Bonded Joints and Repairs in Metallic Alloys, Polymers and Composite Materials: Adhesives, Adhesion Theories and Surface Pretreatment," *Journal of Material Science*, Vol. 39, No. 1, 2004, pp. 1.

14. Bardis, J. and Kedward, K., "Effects of Surface Preparation on Long-Term Durability of Composite Adhesive Bonds," FAA Report DOT/FAA/AR-01/8, April 2001.

15. Harris, A.F. and Beevers, A., "The Effects of Grit-Blasting on Surface Properties for Adhesion," *International Journal of Adhesion and Adhesives*, Vol. 19, No. 6, 1999, pp. 445.

16. Critchlow, G.W. and Brewis, D.M., "Review of Surface Pretreatments for Titanium Alloys," *International Journal of Adhesion and Adhesives*, Vol. 15, No. 3, 1995, pp. 173.

17. Comyn, J., Mascia, L., Xiao, G., and Parker, B.M., "Corona-Discharge Treatment of Polyetheretherketone (PEEK) for Adhesive Bonding," *International Journal of Adhesion and Adhesives*, Vol. 16, No. 4, 1996, pp. 301.

18. Green, M.D., Guild, F.J., and Adams, R.D., "Characterisation and Comparison of Industrially Pre-Treated Homopolymer Polypropylene, HF 135M," *International Journal of Adhesion and Adhesives*, Vol. 22, No. 2, 2002, pp. 81.

19. Romero-Sanchez, M.D., Pastor-Blas, M.M., and Martin-Martinez, J.M., "Treatment of a Styrene-Butadiene-Styrene Rubber With Corona Discharge to Improve the Adhesion to Polyurethane Adhesive," *International Journal of Adhesion and Adhesives*, Vol. 23, No. 1, 2003, pp. 49.

20. Occhiello, E., Morra, M., Guerrini, G.L., and Garbassi, F., "Adhesion Properties of Plasma-Treated Carbon/PEEK Composites," *Composites*, Vol. 23, No. 3, 1992, pp. 193.

21. Chin, J.W. and Wightman, J.P., "Surface Characterization and Adhesive Bonding of Toughened Bismaleimide Composites," *Composites*, Vol. 27, No. 6, 1996, pp. 419.

22. Noeske, M., Degenhardt, J., Strudthoff, S., and Lommatzsch, U., "Plasma Jet Treatment of Five Polymers at Atmospheric Pressure: Surface Modifications and the Relevance for Adhesion," *International Journal of Adhesion and Adhesives*, Vol. 24, No. 2, 2004, pp. 171.

23. Romero-Sanchez, M.D., Pastor-Blas, M.M., and Martin-Martinez, J.M., "Environmental Friendly Surface Treatments of Styrene–Butadiene–Styrene Rubber: Alternatives to the Solvent-Based Halogenation Treatment," *International Journal of Adhesion and Adhesives*, Vol. 25, No. 1, 2005, pp. 19.

24. Tatoulian, M., Arefi-Khonsari, F., Shahidzadeh-Ahmadi, N., and Amouroux, J., "Comparison of the Efficiency of N_2 and NH_3 Plasma Treatments to Improve the Adhesion of PP Films to *In Situ* Deposited Al Coatings. Study of Ageing Phenomena in Terms of Acid-base Properties," *International Journal of Adhesion and Adhesives*, Vol. 15, No. 3, 1995, pp. 177.

25. Galantucci, L.M., Gravina, A., Chita, G., and Cinquepalmi, M., "Surface Treatment for Adhesive-Bonded Joints by Excimer Laser," *Composites*, Vol. 27, No. 11, 1996, pp. 1041.

26. Molitor, P. and Young, T., "Adhesives Bonding of a Titanium Alloy to a Glass Fibre Reinforced Composite Material," *International Journal of Adhesion and Adhesives*, Vol. 22, No. 2, 2002, pp. 101.

27. Critchlow, G.W., Cottam, C.A., Brewis, D.M., and Emmony, D.C., "Dry Ice Blasting as Pretreatment of Aluminum Surfaces to Improve the Adhesive Strength of Aluminum Bonding Joints," *International Journal of Adhesion and Adhesives*, Vol. 17, No. 2, 1997, pp. 143.

28. Broad, R., French, J., and Sauer, J., "CLP New, Effective, Ecological Surface Pretreatment for Highly Durable Adhesively Bonded Metal Joints," *International Journal of Adhesion and Adhesives*, Vol. 19, Nos. 2-3, 1999, pp. 193.

29. Molitor, P. and Young, T., "Investigations Into the use of Excimer Laser Irradiation as a Titanium Alloy Surface Treatment in a Metal to Composite Adhesive Bond," *International Journal of Adhesion and Adhesives*, Vol. 24, No. 2, 2004, pp. 127.

30. Petrie, E.M., *Handbook of Adhesives and Sealants*, McGraw-Hill, New York, 2000, pp. 880.

31. Bjorgum, A., Lapique, F., Walmsley, J., and Redford, K., "Anodising as Pre-Treatment for Structural Bonding," *International Journal of Adhesion and Adhesives*, Vol. 23, No. 5, 2003, pp. 401.

32. Brewis, D.M. and Dahm, R.H., "A Review of Electrochemical Pretreatments of Polymers," *International Journal of Adhesion and Adhesives*, Vol. 24, No. 5, 2001, pp. 397.

33. Johnsen, B.B., Lapique, F., and Bjorgum, A., "The Durability of Bonded Aluminium Joints: A Comparison of AC and DC Anodising Pretreatments," *International Journal of Adhesion and Adhesives*, Vol. 24, No. 2, 2004, pp. 153.

34. Nitowski, G.A., "Topographic and Surface Chemical Aspects of the Adhesion of Structural Epoxy Resins to Phosphous Oxo Acid Treated Aluminum Adherends," Ph.D. Dissertation, Virginia Polytechnic Institute, 1998, pp. 213.

35. Blohowiak, K.Y., Osborne, J.H., and Krienke, K.A., "Sol for Bonding Expoxies to Aluminum or Titanium Alloys," U.S. Patent 6,037,060, 2000.

36. Davis, G.D., Groff, G.B., and Zatorski, R.A., "Plasma Spray Coatings as Treatments for Aluminum, Titanium and Steel Adherends," *Surface and Interface Analysis*, Vol. 25, No. 5, 1997, pp. 366.

37. Ramani, K., Weidner, W.J., and Kumar, G., "Silicon Sputtering as a Surface Treatment to Titanium Alloy for Bonding With PEKEKK," *International Journal of Adhesion and Adhesives*, Vol. 18, No. 6, 1998, pp. 401.

38. Cunliffe, A.V., Evans, S., Tod, D.A., Torry, S.A. and Wylie, P., "Optimum Preparation of Silanes for Steel Pre-Treatment," *International Journal of Adhesion and Adhesives*, Vol. 21, No. 4, 2001, pp. 287.

39. Rattana, A., Hermes, J.D., Abel, M., and Watts, J.F., "The Interaction of a Commercial Dry Film Adhesive With Aluminium and Organosilane Treated Aluminium Surfaces: A Study by XPS and ToF-SIMS," *International Journal of Adhesion and Adhesives*, Vol. 22, No. 3, 2002, pp. 205.

40. Wefers, K., Nitowski, G.A., and Wieserman, L.F., "Phosphonic/Phosphinic Acid Bonded to Aluminum Hydroxide Layer," U.S. Patent 5,132,181, 1992.

41. Rider, A.N. and Arnott, D.R., "Durability of Bonds Formed Between Epoxy Adhesive and Aluminium Alloy Treated With Phosphonate Inhibitors," *Surface and Interface Analysis*, Vol. 24, No. 9, 1996, pp. 583.

42. Rider, A. and Vodicka, R., "Proposed Framework for a Risk-Based Approach for the Environmental Certification of Adhesively Bonded Repairs," DSTO Report, DSTO-RR-0282, 2004.

43. Phung, L.H., Kleinert, H., Fussel, U., Duc, L.M., Rammelt, U., and Plieth, W., "Influence of Self-Assembling Adhesion Promoter on the Properties of the Epoxy/Aluminium Interphase," *International Journal of Adhesion and Adhesives*, Vol. 25, No. 3, 2005, pp. 239.

44. Hart-Smith, L.J., “Adhesive Bonding of Composite Structures-Progress Date and Some Remaining Challenges,” *Journal of Composites Technology and Research*, Vol. 24, No. 3, 2002, pp. 133.

45. Ouddane, M. and Boukhili, R., “Moisture Absorption Effect on Adhesive Filled Bonded Joints,” *Polymer Composites*, Vol. 19, No. 6, 1998, pp. 680.

46. Chang, S., “Effect of Curing History on Ultimate Glass Transition Temperature and Network Structure of Crosslinking Polymers,” *Polymer*, Vol. 33, No. 22, 1992, pp. 4768.

47. Lapique, F. and Redford, K., “Curing Effects on Viscosity and Mechanical Properties of a Commercial Epoxy Resin Adhesive,” *International Journal of Adhesion and Adhesives*, Vol. 22, No. 4, 2002, pp. 337.

48. Pearce, P.J., Davidson, R.G., and Morris, C.E.M., “Aging and Performance of Structural Film Adhesives,” *Journal of Applied Polymer Science*, Vol. 27, No. 11, 1982, pp. 2363.

49. Rider, A. and Chalkley, P., “Durability of an Off-Optimum Cured Aluminium Joint,” *International Journal of Adhesion and Adhesives*, Vol. 24, No. 2, 2004, pp. 95.

50. Pearce, P.J., Arnott, D.R., Camilleri, A., Kindermann, M.R., Mathys, G.R., and Wilson, A.R., “Cause and Effect of Void Formation During Vacuum Bag Curing of Epoxy Film Adhesives,” *Journal of Adhesion Science and Technology*, Vol. 12, No. 6, 1998, pp. 567.

51. Lee, L.H., *Fundamentals of Adhesion*, Plenum Press, New York, 1991.

52. Gao, H. and Yao, H., “Shape Insensitive Optimal Adhesion of Nanoscale Fibrillar Structures,” *Proceedings of the National Academy of Sciences*, Vol. 101, No. 21, 2004, pp. 7851.

53. Woerdeman, D.L., Emerson, J.A., and Giunta, R.K., “JKR Contact Mechanics for Evaluating Surface Contamination on Inorganic Substrates,” *International Journal of Adhesion and Adhesives*, Vol. 22, No. 3, 2002, pp. 257.

54. Rider, A.N., Olsson-Jacques, C.L., and Arnott, D.R., “Influence of Adherend Surface Preparation on Bond Durability,” *Surface and Interface Analysis*, Vol. 27, No. 12, 1999, pp. 1055.

55. Olson-Jacques, C.L., Wilson, A.R., Rider, A.N., and Arnott, D.R., “Effect of Contaminant on the Durability of Epoxy Adhesive Bonds With Alclad 2024 Aluminium Alloy Adherends,” *Surface and Interface Analysis*, Vol. 24, No. 6, 1996, pp. 569.

56. Horner, M.R., Boerio, F.J., and Clearfield, H.M., “An XPS Investigation of the Adsorption of Aminosilanes Onto Metal Substrates,” *Journal of Adhesion Science and Technology*, Vol. 6, No. 1, 1992, pp. 1.

57. Rider, A.N., "Factors Influencing the Durability of Epoxy Adhesion to Silane Pretreated Aluminium," *International Journal of Adhesion and Adhesives*, Vol. 26, Nos. 1-2, 2006, pp. 67.

58. Underhill, P.R., Goring, G., and Duquesnay, D.L., "A Study of the Deposition of 3-Glycidoxypropyltrimethoxysilane on Aluminum," *International Journal of Adhesion and Adhesives*, Vol. 18, No. 5, 1998, pp. 307.

59. Abel, M., Watts, J.F., and Digby, R.P., "The Adsorption of Alkoxysilanes on Oxidised Aluminium Substrates," *International Journal of Adhesion and Adhesives*, Vol. 18, No. 3, 1998, pp. 179.

60. Quinton, J.S. and Dastoor, P.C., "Conformational Dynamics of γ-APS on the Iron Oxide Surface: An Adsorption Kinetic Study Using XPS and ToF-SIMS," *Surface and Interface Analysis*, Vol. 30, No. 1, 2000, pp. 21.

61. Johnsen, B.B., Olafsen, K., and Stori, A., "Reflection-Absorption FT-IR Studies of the Specific Interaction of Amines and an Epoxy Adhesive With GPS Treated Aluminium Surfaces," *International Journal of Adhesion and Adhesives*, Vol. 23, No. 2, 2003, pp. 155.

62. Baldan, A., "Review Adhesively-Bonded Joints and Repairs in Metallic Alloys, Polymers and Composite Materials: Adhesives, Adhesion Theories and Surface Pretreatment," *Journal of Material Science*, Vol. 39, No. 1, 2004, pp. 1.

63. Allen, K.W., "At Forty Cometh Understanding," *International Journal of Adhesion and Adhesives*, Vol. 23, No. 2, 2003, pp. 87.

64. Adams, R.D., *Adhesive Bonding*, Woodhead Publishing Limited, Cambridge, UK, 2005.

65. Jeffrey, G.A., *An Introduction to Hydrogen Bonding*, Oxford University Press, New York, 1997.

66. Drago, R.S., Vogel, G.C., and Needham, T.E., "Four-Parameter Equation for Predicting Enthalpies of Adduct Formation," *Journal of the American Chemical Society*, Vol. 93, No. 23, 1971, pp. 6014.

67. Kano, Y., Akiyama, S., and Kasemura, T., "Surface Segregation and Miscibility in Blends of Poly(Ethyl Acrylate) With Poly(Vinylidene Fluoride-co-hexafluoroacetone)," *International Journal of Adhesion and Adhesives*, Vol. 15, No. 4, 1995, pp. 219.

68. Erruchota, C., Wattsa, J.F., Loweb, C., and Beamson, G., "Characterisation of the Curing Temperature Effects on Polyester Systems by Angle-Resolved XPS (ARXPS)," *International Journal of Adhesion and Adhesives*, Vol. 23, No. 2, 2003, pp. 101.

69. Emerson, J.A., Guess, E.R., Adkins, C., Curro, J.G., Reedy, E.D., Jr., Lopez, E.P., and Lemke, P., "Investigation of the Impact of Cleaning on the Adhesive Bond and the Process Implications," Sandia National Laboratories Report, SAND2000-1042, 2000.

70. Brewis, D.M., Mathieson, I., and Wolfensberger, M., "Treatment of Low Energy Surfaces for Adhesive Bonding," *International Journal of Adhesion and Adhesives*, Vol. 15, No. 2, 1995, pp. 87.

71. Li, Z., Hayward, D., Gilmore, R., and Pethrick, R.A., "Investigation of Moisture Ingress Into Adhesive-bonded Structures Using High Frequency Dielectric Analysis," *Journal of Material Science*, Vol. 32, No. 4, 1997, pp. 879.

72. Rushforth, M.W., Bowen, P., Mcalpine, E., Zhou, X., and Thompson, G.E., "The Effect of Surface Pretreatment and Moisture on the Fatigue Performance of Adhesively-Bonded Aluminium," *Journal of Material Processes and Technology, 153/154, Proceedings of the International Conference in Advances in Materials and Processing Technologies*, 2004, pp. 359.

73. Griffith, A.A., "The Phenomena of Rupture and Flow in Solids," *Philosophical Transactions of the Royal Society*, Vol. 221, 1921, pp. 163.

74. Myhre, S.H., Labor, J.D., and Aker, S.C., "Moisture Problems in Advanced Composite Structural Repair," *Composites*, Vol. 13, No. 3, 1982, pp. 289.

75. Comyn, J., *Durability of Structural Adhesives*, Applied Science Publishers, Kinloch, A.J., ed., London, 1983, Chapter 3, pp. 85.

76. Kinloch, A.J., ed., *Durability of Structural Adhesives*, Applied Science Publishers, London, 1983, Chapter 1, pp. 1.

77. Comyn, J., Brewis, D.M., and Tredwell, S.T., "Bonding of Aluminium Alloy With Some Phenolic Adhesives and a Modified Epoxide Adhesive, and Strength Changes on Exposure to Moist Air at 50°C," *International Journal of Adhesion and Adhesives*, Vol. 21, No. 1, 1987, pp. 59.

78. Comyn, J., Groves, C.L., and Saville, R.W., "Durability in High Humidity of Glass-to-Lead Alloy Joints Bonded With an Epoxide Adhesive," *International Journal of Adhesion and Adhesives*, Vol. 14, No. 1, 1994, pp. 15.

79. Sato, T., "Thermal Decomposition of Aluminium Hydroxides to Aluminas," *Thermochimica Acta*, Vol. 88, No. 1, 1985, pp. 69.

80. Martens, W.N., Frost, R.L., Bartlett, J., and Kloprogge, J.T., "The Ageing of Alumina Hydrolysates Synthesized From Sec-butoxyaluminium(III)," *Journal of Materials Chemistry*, Vol. 11, No. 6, 2001, pp. 1681.

81. Michaloudaki, M., Lehmann, E., and Kosteas, D., "Neutron Imaging as a Tool for the Non-Destructive Evaluation of Adhesive Joints in Aluminium," *International Journal of Adhesion and Adhesives*, Vol. 25, No. 3, 2005, pp. 257.

82. Hellier, C.J., *Handbook of Non-Destructive Evaluation*, McGraw-Hill, New York, 2001.

83. Tomlinson, S.K., Ghita, O.R., Hooper, R.M., and Evans, K.E., "The Use of Near Infrared Spectroscopy for the Cure Monitoring of Adhesives," *Vibrational Spectroscopy*, Vol. 40, No. 1, 2006, pp. 133.

84. Bockenheimer, C., Fata, D., Possart, W., Rothenfusser, M., Netzelmann, U., and Schaefer, H., "The Method of Non-Linear Ultrasound as a Tool for the Non-Destructive Inspection of Structural Epoxy-Metal Bonds – A Résumé," *International Journal of Adhesion and Adhesives*, Vol. 22, No. 4, 2002, pp. 227.

85. Letellier, P., Mayaffre, A., and Turmine, M., "Drop Size Effect on Contact Angle Explained by Nonextensive Thermodynamics. Young's Equation Revisited," *Journal of Colloid and Interface Science*, Vol. 314, 2007, pp. 604-614.

86. Stark, N.M. and Matuana, L.M., "Characterization of Weathered Woodeplastic Composite Surfaces Using FTIR Spectroscopy, Contact Angle, and XPS," *Polymer Degradation and Stability*, Vol. 92, 2007, pp 1883-1890.

87. Diihmke, E. and Greim, L., "Fast Neutron Imaging by Cellulose Nitrate Foils," *Proc First World Conf on Neutron Radiography*, San Diego, California, USA, 7-10 December 1981, pp. 565.

88. Heidt, H. and Stade, J., "Review and Prospects of Neutron Radiography in the FRG," *NDT International*, Vol. 21, No. 5, October 1988, pp. 345-347.

89. Le´tang, Jean-Michel and Peix, Gilles, "On-Line X-Ray Focal Spot Assessment Based on Deconvolution Using Standard Imaging Devices," *NDT&E International*, Vol. 36, 2003, pp. 303-317

90. Inagaki T. and Okamoto, Y., "Diagnosis of the Leakage Point on a Structure Surface Using Infrared Thermography in Near Ambient Conditions," *NDT & E International*, Vol. 30, No. 3, 1997, pp. 135-42.

91. Rodrı´guez, M.A., Ramos, A., and San Emeterio, J.L., "Location of Multiple Proximate Flaws Using Perpendicular NDT Ultrasonic Arrays," *Ultrasonics 44*, 2006, pp. e1105-e1109.

92. Gori, P., Cincotti, G., Pappalardo, M., "Dense and Sparse 2D Array Radiation Patterns in Lossy Media," *IEEE Transactions on Ultrasonics, Ferroelectonics and Control*, Vol. 47, No. 4, 2000, pp. 940-947.

93. Yang, M., et al., "Real-time Ultrasound Process Tomography for Two-Phase Flow Imaging Using a Reduced Number of Transducers," *IEEE Transactions on Ultrasonics, Ferroelectonics and Control*, Vol. 46, No. 3, 1999, pp. 492-5.

94. Genest, M., Martinez, M., Mrad, N., Renaud G., and Fahr, A. "Pulsed Thermography for Non-Destructive Evaluation and Damage Growth Monitoring of Bonded Repairs," *Composite Structures*, Vol. 88, No. 1, 2009, pp. 112.

95. Avdelidis, N.P., Almond, D.P., Dobbinson, A., Hawtin, B.C., Ibarra-Castanedo, C., and Maldague, X., "Aircraft Composites Assessment by Means of Transient Thermal NDT," *Progress in Aerospace Sciences*, Vol. 40, 2004, pp. 143-162.

96. Nayeb-Hashemi, H., Swet, D., and Vaziri, A., "New Electrical Potential Method for Measuring Crack Growth in Nonconductive Materials," *Measurement*, Vol. 36, No. 2, 2004, pp. 121.

97. Scully, J.R., "Electrochemical Impedance of Organic-Coated Steel: Correlation of Impedance Parameters With Long-Term Coating Deterioration," *Journal of the Electrochemical Society*, Vol. 136, No. 4, 1989, pp. 979.

98. Ghajar, R. "An Alternative Method for Crack Interaction in NDE of Multiple Cracks by Means of Potential Drop Technique," *NDT&E International*, Vol. 37, 2004, pp. 539-544.

99. Ghajarieh, R., Saka, M., Sugawara, T., Komura, H.I., and Sakamoto, H., "NDE of Multiple Cracks on the Surface of Materials by Means of the Potential Drop Technique," *NDT&E International*, Vol. 27, No. 3, 1994, pp. 143-150.

100. Howden Machinery, "Improved Version of Potential Drop Crack Monitor is Introduced," *International Journal of Fatigue*, October 1987, pp. 248-248.

101. Bard, A.J. and Faulkner, L.R., *Electrochemical Methods: Fundamental and Applications*, 2nd ed., John Wiley & Sons, Inc., New York, 2000.

102. Nicholson, R.S. and Shain, I., "Theory of Stationary Electrode Polarography. Single Scan and Cyclic Methods Applied to Reversible, Irreversible, and Kinetic Systems," *Analytical Chemistry*, Vol. 36, No. 4, 1964, pp. 706.

103. Heitner-Wirguin, C., "Recent Advances in Perfluorinated Ionomer Membranes: Structure, Properties and Applications," *Journal of Membrane Science*, Vol. 120, No. 1, 1996, pp. 1.

104. Han, Y., Schmitt, S., and Friedrich, K., "Nanoscale Indentation and Scratch of Short Carbon Fiber Reinforced PEEK/PTFE Composite Blend by Atomic Force Microscope Lithography," *Applied Composite Materials*, Vol. 6, No. 1, 1999, pp. 1-18.

105. Gao, S.L., and Mäder, E., "Characterization of Interphase Nanoscale Property Variations in Glass Fibre Reinforced Polypropylene and Epoxy Resin Composites," *Composites Part A*, Vol. 33, No. 4, 2002, pp. 559-576.

106. Gao, S.L., Mäder, E., Zhandarov, S.F., "Carbon Fibers and Composites With Epoxy Resins: Topography, Fractography and Interphases," *Carbon*, Vol. 42, No. 3, 2004, pp. 515-529.

107. Wang, Y. and Hahn, T.H., "AFM Characterization of the Interfacial Properties of Carbon Fiber Reinforced Polymer Composites Subjected to Hygrothermal Treatments," C*omposites Science and Technology*, Vol. 67, No. 1, 2007, pp. 92-101.

108. Tian, F., Wang, C., Lin, Z., Li, J.W., and Bai, C.L., "Surface Morphology Studies of In Situ Polycondensation Microcomposites Using Atomic Force Microscopy," *Applied Physics A: Materials Science & Processing*, Vol. 66, 1998, pp. 591-596.

109. Florin, E.L., Moy, V.T., and Gaub, H.E., "Adhesion Forces Between Individual Ligand-Receptor Pairs," *Science*, Vol. 264, No. 5157, 1994, pp. 415.

110. Koleske, D.D., Lee, G.U., Gans, B.I., Lee, K.P., DiLella, D.P., Wahl, K.J., Barger, W.R., Whitman, L.J., and Colton, R.J., "Design and Calibration of a Scanning Force Microscope for Friction, Adhesion, and Contact Potential Studies," *Review of Scientific Instruments*, Vol. 66, 1995, pp. 4566.

111. Williams, J.M., Han, T., and Beebe, Jr., T.P., "Determination of Single-Bond Forces From Contact Force Variances in Atomic Force Microscopy," *Langmuir*, Vol. 12, No. 5, 1996, pp. 1291-1295.

112. Noy, A., Vezenov, D.V., and Lieber, C.M., "Chemical Force Microscopy," *Annual Review of Materials Science*, Vol. 27, No. 1, 1997, pp. 381-421.

113. Ybarra, G.O., Moina, C.A., Floritb, M.I., and Posadas, D., "Redox Mediation at Electroactive Polymer Coated Electrodes: Mechanicstic Diagnosis Criteria From Steady State Polarization Curves," *Journal of Electroanalytical Chemistry*, Vol. 609, 2007, pp. 129-139.

114. Murray, R.W. (ed.), *Molecular Design of Electrode Surfaces*, Wiley, New York, 1992.

115. Laviron, E. "A Multilayer Model for the Study of Space Distributed Redox Modified Electrodes: Part I. Description and Discussion of the Model," *Journal of Electroanalytical Chemistry*, Vol. 112, 1980, pp. 1-9.

116. Anson, F.C., Saveant, J. -M., and Shigehara, K., "Self-Exchange Reactions at Redox Polymer Electrodes. A Kinetic Model and Theory for Stationary Voltammetric Techniques," *Journal of Physical Chemistry*, Vol. 87, 1983, pp. 214-219.

117. Mauritz, K.A. and Moore, R.B., "State of Understanding of Nafion," *Chemical Review*, Vol. 104, No. 10, 2004, pp. 4535.