AR
95/
87

COPY — 2/3

FEDERAL AVIATION ADMINISTRATION
TECHNICAL CENTER LIBRARY
ATLANTIC CITY INT'L ARPRT, NJ 08405

DOT/FAA/AR-95/87

Office of Aviation Research
Washington, D.C. 20591

Full-Scale Evaluations of Halon 1211 Replacement Agents for Airport Fire Fighting

Joseph A. Wright

Airport and Aircraft Safety
Research and Development Division
FAA Technical Center
Atlantic City International Airport, NJ 08405

October 1995

Final Report

This document is available to the U.S. public through the National Technical Information Service, Springfield, Virginia 22161.

U.S. Department of Transportation
Federal Aviation Administration

DOT/FAA
AR-95/
87
c. 2

FAA TECHNICAL CENTER LIBRARY
00015398

NOTICE

This document is disseminated under the sponsorship of the U.S. Department of Transportation in the interest of information exchange. The United States Government assumes no liability for the contents or use thereof. The United States Government does not endorse products or manufacturers. Trade or manufacturer's names appear herein solely because they are considered essential to the objective of this report.

DOT/FAA
AR-95/
87
c. 2

Wright, Joseph A.
Full-scale evaluation of
halon 1211 replacement
agents for airport fire...

FAA
TECHNICAL CENTER
Atlantic City, N.J.

Technical Report Documentation Page

1. Report No.	2. Government Accession No.	3. Recipient's Catalog No.
DOT/FAA/AR-95/87		

4. Title and Subtitle	5. Report Date
FULL-SCALE TEST EVALUATIONS OF HALON 1211 REPLACEMENT AGENTS FOR AIRPORT FIRE FIGHTING	October 1995
	6. Performing Organization Code
7. Author(s) Joseph A. Wright	8. Performing Organization Report No. AAR-410
9. Performing Organization Name and Address Federal Aviation Administration Technical Center Atlantic City International Airport, NJ 08405	10. Work Unit No. (TRAIS)
	11. Contract or Grant No.
12. Sponsoring Agency Name and Address U.S. Department of Transportation Federal Aviation Administration Office of Aviation Research Washington, D.C. 20591	13. Type of Report and Period Covered Final Report
	14. Sponsoring Agency Code

15. Supplementary Notes

16. Abstract

Halon 1211 has been identified as a stratospheric ozone depleter. In 1988 the environmental community started tracking the large-scale ozone destruction and depletion connected with the use of chlorofluorocarbon chemicals including Halon 1211. In 1992, as specified in the Montreal Protocols Clean Air Act, the United States Environmental Protection Agency developed a program to phase out the use of these chemicals in the United States. Its production was banned in January 1, 1994.

This report describes the evaluation of two candidate agents tested by the FAA as alternatives to Halon 1211. These agents were Halotron I and perfluorohexane. The objective was to evaluate these extinguishing agents in terms of extinguishment time and quantity of agent required to extinguish unique flight line type test fires. The test results showed that Halotron I required an average of 1 1/2 pounds of agent to perform the same extinguishment as 1 pound of Halon 1211. These results were well within acceptable limits of agents for airport use. Halotron I was approved for use at FAA certificated airports as a complementary extinguishing agent.

17. Key Words	18. Distribution Statement
Halotron Perfluorohexane Halon 1211	This document is available to the public through the National Technical Information Service, Springfield, VA 22161

19. Security Classif. (of this report)	20. Security Classif. (of this page)	21. No. of Pages	22. Price
Unclassified	Unclassified	47	

Form DOT F 1700.7

PREFACE

The author wishes to acknowledge the following:

Mr. Jeff Gibson of American Pacific Corporation for his contributions in providing field notes for review and data results from the many hours of testing as well as technical editing.

Mr. William Dees, and Mr. Mike Rocheford Applied Research Associates, Tyndall AFB, for their many hours of dedicated work given in this agent evaluation program.

TABLE OF CONTENTS

		Page
EXECUTIVE SUMMARY		vii
1	INTRODUCTION	1
1.1	Background	3
1.2	Objective	3
1.3	Scope	4
2	TEST PROTOCOLS	5
2.1	Test Reproductions	5
2.2	Test Description	8
2.3	Dry-Pool Fire Extinguishment Tests	8
2.4	Three-Dimensional, Inclined-Plane Tests	8
2.5	Simulated Engine Nacelle Running Fuel Fire Tests	9
2.6	Simulated Wheel Brake Fire Involving Hydraulic Fluid	9
2.7	Agent Throw-Range Tests	14
2.8	Data Collection	14
3	HALOTRON I DESCRIPTION	14
4	FIRE EXTINGUISHER TEST HARDWARE	15
5	TEST RESULTS	16
5.1	Three-Dimensional, Inclined-Plane Test	16
5.2	Simulated Engine Nacelle Running Fuel Fire Test	18
5.3	Dry-Pool Fire Extinguishment Test Results	18
5.4	Simulated Wheel Well Fire Test Results	22
5.5	Agent Throw-Range Test Results	22
6	BOOSTER MODIFICATION 1	25
7	BOOSTER MODIFICATION 2	31
8	VEHICLE QUANTITY CAPACITIES ISSUE	34
9	CONCLUSION	34
10	REFERENCES	36
APPENDIX A		

LIST OF ILLUSTRATIONS

Figure		Page
1	Photographs of Test Articles	6
2	Three-Dimensional, Inclined Plane	10
3	F-100 Engine Nacelle Test Apparatus Fabrication Drawing	11

LIST OF TABLES

Table		Page
1	Fire-Extinguishing Agent Property Comparisons	2
2	Comparison of Halon 1211 and Halotron I Operating Parameters in the Amerex Model 600	3
3	Three-Dimensional, Inclined-Plane Test Results	17
4	Simulated Engine Nacelle Running Fuel Fire Test Results	19
5	Dry-Pool Fire Extinguishment Test Results	21
6	Simulated Wheel Well Fire	23
7	Simple Throw-Range Tests	24
8	Halotron I Booster Modification 1 Test Results, Inclined-Plane Tests (June 1993)	27
9	Halotron I Booster Modification 1 Test Results, Simulated Engine Nacelle Running Fuel Fire (June 1993)	28
10	Halotron I Booster Modification 1 Test Results, Dry-Pool Fires, Approximately 850 Square Feet (June 1993)	30
11	Halotron I Booster Modification 2 Test Results, Simulated Engine Nacelle Running Fuel Fire (October 1993)	32
12	Halotron I Booster Modification 2 Test Results, Dry-Pool Fires (October - November 1993)	33

EXECUTIVE SUMMARY

Halon 1211 has been identified as a stratospheric ozone depleter. In 1988 the environmental community started tracking the large-scale ozone depletion connected with the use of chlorofluorocarbon chemicals including Halon 1211. In 1992 as specified by the agreement of the Montreal Protocols Clean Air Act, the United States Environmental Protection Agency developed a program to phase out the use of these chemicals in the United States. Its production was banned in January 1, 1994.

For many years Halon 1211 was used effectively in fire fighting as the first line of defense for aircraft maintenance and flight line operational personnel. It was used to combat small engine and nacelle fires as well as running fuel fires by the airport rescue and fire-fighting services. Concerned with the future exhaustion of limited supplies of the Halon 1211 agent, the Federal Aviation Administration (FAA) working with the United States Air Force (USAF) developed a research and development program to test candidate alternative agents.

This report describes the evaluation of two candidate agents tested by the FAA as alternatives to Halon 1211. These agents were Halotron I and perfluorohexane. The objective was to evaluate these extinguishing agents in terms of extinguishment time and quantity of agent required to extinguish unique flight line type test fires. Specifically these agents were investigated relative to their performance in extinguishment of small-pool ground fires, three-dimensional flowing engine fuel fires, inclined-plane running fuel fires, and a simulated wheel well/tire fire involving hydraulic fluid.

The test results showed that Halotron I required an average of 1 1/2 pounds of agent to perform the same extinguishment as 1 pound of Halon 1211. These results were well within acceptable limits of agents for airport use. Halotron I was approved for use at FAA certificated airports as a complementary extinguishing agent. Perfluorohexane could not extinguish the most severe test fire, the engine nacelle three-dimensional running fuel fire. These test results were also used to reestablish the test protocols by which any future candidate agent could be evaluated for adequacy in meeting FAA standards for a clean extinguishing agent at FAA funded airports.

1. INTRODUCTION.

Halon 1211 is a very effective "clean" fire-extinguishing agent. This product was approved as an extinguishing agent for flight line equipment and crash fire vehicles by the FAA Administrator in 1972. The National Fire Protection Association (NFPA) defines a "clean agent" as an electrically nonconductive, volatile or gaseous fire-fighting agent that does not leave residue upon evaporation. For many years Halon 1211 has been relied upon as the first line of defense for aircraft maintenance and flight line personnel for fighting small engine and nacelle fires. It is also highly regarded for its ability to extinguish a three-dimensional running fuel fire by airport firefighters.

Halon 1211 has been identified as a stratospheric ozone depleter. Its production was banned in January 1, 1994, as specified by the November 1992 Copenhagen Amendments to the Montreal Protocol. The FAA negotiated with the U.S. Environmental Protection Agency's (EPA) Significant New Alternatives Policy (SNAP) program administrator for the continued use of Halon 1211 until a suitable substitute could be found. The following restrictions were agreed upon for civil fire-fighting use of Halon 1211:

- Only critical firefighter training would be accomplished with Halon 1211.
- All trucks will be reserviced with recycled Halon 1211 if existing contents are depleted.
- Trucks left in service with Halon 1211 would be fitted with leak-proof safety valve devices.
- A research and development program would be undertaken to look at the performance of replacement candidate agents.

Perfluorohexane (Per.C^6) and Halotron I are two clean streaming extinguishing agents which are candidate replacements for Halon 1211. Only Halotron I was approved by the EPA as a streaming agent candidate for civil flight line and fire vehicle use under the SNAP program. Perfluorohexane was initially approved as a military application flight line clean candidate agent, but its long lifetime atmospheric life cycle proved to be its downfall. Perfluorohexane displayed similar fire performance to the Halotron I product but was not optimized to the delivery systems. Early EPA restrictions on its use for commercial airport fire fighting use limited its evaluation in this program. The FAA research program evaluated both of these agents as possible candidates for fire-fighting use. Specific properties of these products are contained in table 1. Table 2 shows a comparison of Halotron I and Halon 1211 loaded in a standard Amerex flight line extinguisher.

TABLE 1. FIRE-EXTINGUISHING AGENT PROPERTY COMPARISONS

Property	Halon 1211	Perfluorohexane	Halotron I
Chemical Formula	CF_2ClBr	C_6F_{14}	$C_2HCl_2F_3$ + (exp)
Molecular Weight	165.4	338	150.7
Boiling Point	-4°C	56°C	27°C *
Liquid Density at 25°C	1.79 kg/l	1.68 kg/l	1.48 kg/l
Vapor Pressure at 25°C	2.67 bar	0.31 bar	**15.49 bar
Atmospheric Lifetime * * *	12.5-25 yrs	500-1000 yrs	3.5-11 yrs
Ozone Depletion Potential (ODP)	4	0	0.014
Acute Toxicity, ALC, LC_{50} (4 hrs)	3.1%-10%	> 30%	> 3%

* For blend at 1 atm, 70% filling ratio, 1 kg/l filling density

* * Vapor pressure for blend and expander gas.

* * * Depending on model used for calculation.

TABLE 2. COMPARISON OF HALON 1211 AND HALOTRON I OPERATING PARAMETERS IN THE AMEREX MODEL 600

Parameter	Halon 1211 (BCF)	Halotron I
Charge amount	150 lb	130-133 lb
Operating pressure	200 psig	240 psig
Discharge time	43 seconds	37 seconds
Nozzle orifice diameter	0.375 in (9.5 mm)	0.551 in (14 mm)
Stem seal and collar 0-ring elastomer	Buna N	Chloroprene or EPDM based
ULI rating	30:A-240:B:C	Unknown at this time

1.1 BACKGROUND.

The Clean Air Act Amendments of 1990 required that the United States Environmental Protection Agency (EPA) establish a program to implement requirements agreed to by the U.S. in the Montreal Protocol on Substances that Deplete Ozone. As a result, the EPA established the Significant New Alternatives Policy (SNAP) program to evaluate proposed substitutes for ozone depleting Halons and chlorofluorocarbons. The initial application deadline for this program was April 1992. Information on Halotron I was submitted to the EPA for their review. This program severely restricts the use of substances with an Ozone Depletion Potential (ODP) above 0.2 (CFC-11=1.0).

In the final SNAP rule published in February 1994, EPA lists Halotron I (referred to in the rule as "HCFC Blend B") as an acceptable substitute for the streaming agent in industrial/commercial and military applications, including flight line use.

As a result of the 1992 Copenhagen amendments to the Montreal Protocol, hydrochloro-fluorocarbons (HCFCs), class II substances (Halotron I) are subject to consumption reductions. These reductions begin in 1996 based on an established formula, with further incremental reductions in the years 2000, 2004, 2015, and with a total phase out in the year 2030. Further, the Copenhagen Amendments require a production ban of Halon 1211 by January 1, 1994.

1.2 OBJECTIVE.

The objective of this Federal Aviation Administration (FAA) and U.S. Air Force (USAF) sponsored test program was to evaluate the flight line fire-fighting effectiveness of Halotron I and perfluorohexane, each being halon replacement candidates for Halon 1211 (bromochloro-difluoromethane). These agents were both tested in small flight line applications as well as major fire rescue test scenarios. The United States Air Force was looking for a drop-in replacement agent in this program. The FAA goal was to quantify the effectiveness of the candidate agents so that they might be used instead of Halon 1211 if a fire service chose to replace or abandon the use of Halon 1211. The cost of Halon 1211 has risen drastically since it was taken out of production. Local suppliers have recently provided price estimates of over twenty-five dollars a pound

(November 1994) for Halon 1211. Halon 1211 could be purchased for less than five dollars a pound (November 1993) prior to its projected production elimination. Recognizing this, the FAA was actively seeking a replacement agent.

The test protocols were based on past full-scale fire test evaluations conducted by the FAA (AGFSRS 71-1,1972, and DOT/FAA-82/109, 1982) to determine the acceptability of using Halon 1211 as a clean fire-extinguishing agent at commercial airports. Specifically, a comparison was made of the performance of perfluorohexane (3-M Corporation) and Halotron I (American Pacific Corporation) relative to Halon 1211 for the extinguishment of small pool fires, three-dimensional flowing engine fuel fires, and inclined-plane running fuel fires.

The tests were conducted by the Wright Laboratory Air Force Base Fire Protection and Crash Rescue Systems Section, Tyndall AFB, Florida. Additional optimization testing was accomplished under a cooperative research agreement between the FAA Technical Center and the American Pacific Corporation.

Replacement of the brominated Halon type fire-extinguishing agents used by the U.S. military became desirable because of the Montreal Protocol on Substances that Destroy Ozone, which was signed by the United States in 1987. This international protocol mandates the phaseout of, among other ozone depleting substances, the Halons, a fully halogenated chlorofluorocarbons (CFC) based group of chemicals that have been found to be extremely effective in fighting commonly encountered fires while acting as clean fire-extinguishing agents that leave no residue after application.

The FAA has been involved in other programs that have evaluated potential replacements for halons. One such program was sponsored by the U.S. Navy and conducted at the Marine Corps Air Station at Beaufort, South Carolina, in October 1992. This program was designed to evaluate Halotron I and perfluorohexane as proposed Halon 1211 flight line replacement agents in a series of full-scale tests that simulated fires commonly encountered by military flight line personnel.

All types of tests conducted in this program were also conducted with Halon 1211 in order to establish a baseline for comparison.

Sources for the information presented in this report include official data recorded by Applied Research Associates (ARA) personnel on site. Additional sources included field notes taken by employees of American Pacific Corporation and by their review of the test videotape.

1.3 SCOPE.

This test program quantifies the fire extinguishment performance of perfluorohexane and Halotron I. In addition it reestablished the test articles and test protocols by which any future candidate agent would be evaluated. The following tests were conducted: dry-pool fire extinguishment; three-dimensional, inclined-plane running fuel fire; simulated engine nacelle running fuel fire; simulated wheel well fires involving hydraulic fluid; and an agent throw-range test. All tests

except the wheel brake fire used JP-4 as the fuel. Figure 1 contains photographs of various test articles used in the course of this eighteen-month research effort.

Initially, all three agents were dispensed using a standard Amerex Model 600 extinguisher. However, it became apparent early in the testing that the standard Amerex extinguisher was not the optimum system for dispensing Halotron I. Despite following precise extinguisher loading procedures, a smooth continuous flow of agent could not be achieved throughout the entire duration of discharge. It was concluded that the pulsating flow or "chugging" was due mainly to a drop in extinguisher pressure during discharge.

Based on the hypothesis that Halotron I performance would be improved if a constant agent discharge rate could be achieved, American Pacific Corporation (AMPAC) developed a modification to the 150-pound capacity standard Amerex Model 600 extinguisher. The modification basically consisted of the addition of a booster cylinder filled with Halotron I expander gas. The purpose of the expander gas was to maintain a constant extinguisher operating pressure. At the request of the FAA, additional Halotron I testing (using modified extinguishers) was conducted, see table 2.

Through a contract with the Amerex Corporation, AMPAC further optimized their modified extinguisher design. In addition a Fire Combat™ standard small-vehicle truck 500-pound Halon 1211 system was also optimized for use with the Halotron I agent.

2. TEST PROTOCOLS.

The various tests which were conducted represented test scenarios that would test the agents at their upper threshold application limit. This was required to determine a reasonable equivalency rating for the new agents. It was difficult to judge performance levels of the replacement agents with early test data which was based on small, easily extinguished four-foot-square pan fires and small ten-foot-diameter pool fires. Neither of these fire types presented any difficulty for the candidate agents.

2.1 TEST REPRODUCTIONS.

It has been over twenty years since Halon 1211 was evaluated under full-scale aircraft ground fire conditions. The FAA Technical Center's Airports Technology R&D Branch has taken the position that any test protocols developed for evaluation of replacement clean extinguishing agent candidates should duplicate as much as possible the original test scenarios for quantifying Halon 1211 as a flight line standby bottle and fire vehicle auxiliary extinguishing agent. Descriptions of these earlier tests can be found in Evaluation of Aircraft Ground Fire-Fighting Agents and Techniques, FAA-RD-71-57, AGFSRS 71-1, 1972.

A. INCLINED-PLANE FULLY INVOLVED FIRE

B. INCLINED-PLANE FIRE-FIGHTING APPROACH

FIGURE 1. PHOTOGRAPHS OF TEST ARTICLES (1 OF 2)

C. NACELLE FIRE FULLY INVOLVED

D. WHEEL FIRE TEST ARTICLE

FIGURE 1. PHOTOGRAPHS OF TEST ARTICLES (2 OF 2)

2.2 TEST DESCRIPTION.

Of the five unique fire-extinguishing tests utilized in this evaluation, four were to extinguish the fires as rapidly as possible. The four were (1) three-dimensional, inclined-plane running fuel fire; (2) simulated engine nacelle running fuel fire; (3) dry-pool fire extinguishment; and (4) simulated wheel well fire. The fifth test was an agent throw-range test to measure the effective throw length of the agent. The fuel for all test events was JP-4 except for the simulated wheel well fire which used the most flammable hydraulic fluid found in aircraft brake systems.

The Halotron I agent was provided for the test program at no cost to the FAA or USAF. More than 12,000 lb of agent was discharged either in fire tests or in discharge testing.

2.3 DRY-POOL FIRE EXTINGUISHMENT TESTS.

Pool fire extinguishment tests (streaming agent or pan fire tests) are usually conducted by floating the fuel on a pool of water. These tests are not representative of most small fuel spill fires encountered in a flight line operation. A common scenario is the spillage of fuel on a dry, level concrete surface. To simulate this event, JP-4 fuel was poured onto a flat level 30- by 30-foot concrete surface and ignited (dry-pool fire test). The project manager felt that this test would be harder but was indicative of the type of fire encountered in a flight line fuel spill response and modified the test protocol accordingly.

Fuel spill areas were varied between 250 and 800 square feet. It was found that the most expedient method for conducting the tests was to mark corners on the concrete and pour fuel on the concrete until it covered the desired area at which time ignition was made. The approximate quantity of fuel required to cover a given area of concrete surface is shown in table 5. This method was used rather than securing concrete curbs within the 30- by 30-foot concrete pad and changing positions of those curbs as the fire area was changed. The total preburn time for this test was not less than 20 seconds.

As soon as the entire spill area was involved in fire, the fire was extinguished by an experienced firefighter using the 150-pound Amerex extinguisher. The objective of the dry-pool fire test was to extinguish the fire as quickly as possible.

2.4 THREE-DIMENSIONAL, INCLINED-PLANE TESTS.

A fire scenario common to many aircraft accidents involves the flow of fuel from ruptured fuel tanks over sloping terrain. The tests apparatus constructed to simulate this condition was a 20-foot-long, 5-foot-wide steel ramp with a catch basin at the base which measured 4 by 8 feet. The ramp had a 8.3-degree pitch or slope of 1 inch per foot. To more accurately represent actual field conditions, the steel ramp was overlaid with 1.5 inches of concrete (to be consistent with tests described in DOT/FAA/CT-82/109). JP-4 was discharged at the rate of 3 gpm (gallons per minute) through five holes in the horizontal pipe positioned across the top of the incline (fuel feed). After 1/4 inch (5 gallons) of fuel accumulated in the catch pan, the fire was ignited. Following a 30-second preburn, the fire was extinguished using the 150-pound Amerex

extinguisher. The fire-fighting approach employed in these tests was to initially extinguish the catch basin and drive the fire up the ramp toward the fuel spray bar. The firefighter was positioned on the windward side of the ramp. The test objective was to extinguish the fire as rapidly as possible.

Figure 1A and B, three-dimensional ramp fire demonstrations, and figure 2, the fire ramp, are taken from the March 10, 1993, test plan and show the configuration of the three-dimensional, inclined-plane running fuel fire test apparatus.

2.5 SIMULATED ENGINE NACELLE RUNNING FUEL FIRE TESTS.

This event simulated a fire in the afterburner (low elevation) end of a simulated jet engine where fuel is allowed to spill from the afterburner onto a concrete surface below. The event required penetration of the agent into a three-dimensional space (the nacelle) as well as extinguishment of a pool fire directly on the concrete. The estimated internal volume of the nacelle was 189 ft^3. The slightly lower afterburner end of the engine nacelle test apparatus (figure 3) was unblocked to permit fuel to flow out of this end of the nacelle and onto the concrete pavement. The nacelle afterburner fuel nozzle was used in all tests to introduce fuel at the rate of 5 gpm into the nacelle where it was allowed to flow onto the concrete surface. A 15-second preburn was used for the tests. The initial configuration utilized a 10- by 15-foot (150-sq ft) curbed concrete area within the 30- by 30-foot concrete pad centered below the afterburner end of the nacelle. Because of leakage through the curb, during the initial pretesting, the curbed section was removed and the fuel was allowed to flow onto the 30- by 30-foot concrete area and allowed to accumulate in a wider area. All official tests were conducted with this configuration.

The test plan called for allowing 24 gallons of fuel to spill onto the concrete surface before ignition. This amount was used on initial tests but was eventually reduced to 15 gallons as the severity of the 24-gallon fire scenario became apparent.

Figure 3, F-100 Engine Nacelle Test Apparatus, (side view), F-100 Engine Nacelle Test Apparatus, Support Frame and F-100 Engine Nacelle Test Apparatus, Nacelle Section Details are taken from the March 1993 Test Plan and show the engine nacelle configuration as it existed with two exceptions. At 80 and 100 inches from the afterburner end and at approximately 5 and 7 o'clock on the circumference of the nacelle, there existed several 3.5-inch-square slots through both the inner and outer shells which were used to light the fuel. The other discrepancy was the orientation of the baffle strips which were in fact horizontal on all three sets of baffles.

2.6 SIMULATED WHEEL BRAKE FIRE INVOLVING HYDRAULIC FLUID.

This test apparatus was designed to simulate a hot wheel brake hydraulic fluid fire. The apparatus consisted of an F-4 aircraft tire and magnesium rim mounted on a stand inside a 4- by 4-foot steel pan. A 2-gallon discharge of hydraulic fluid was placed inside the pan. After an additional 1 gallon of hydraulic fluid was poured on the tire itself, the fire was ignited. The most flammable Mil Spec. hydraulic fluid specified for aircraft systems was used (MIL-H-5606F). Following a

FIRE RAMP AND FUEL MANIFOLD
(WITH SPILL COLLECTION PAN)

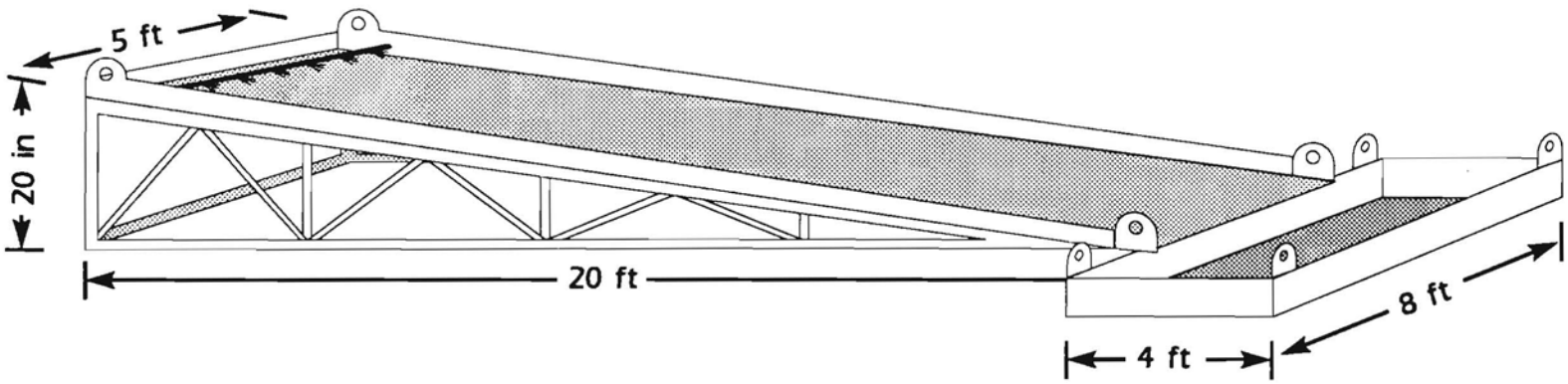

FIGURE 2. THREE-DIMENSIONAL, INCLINED-PLANE

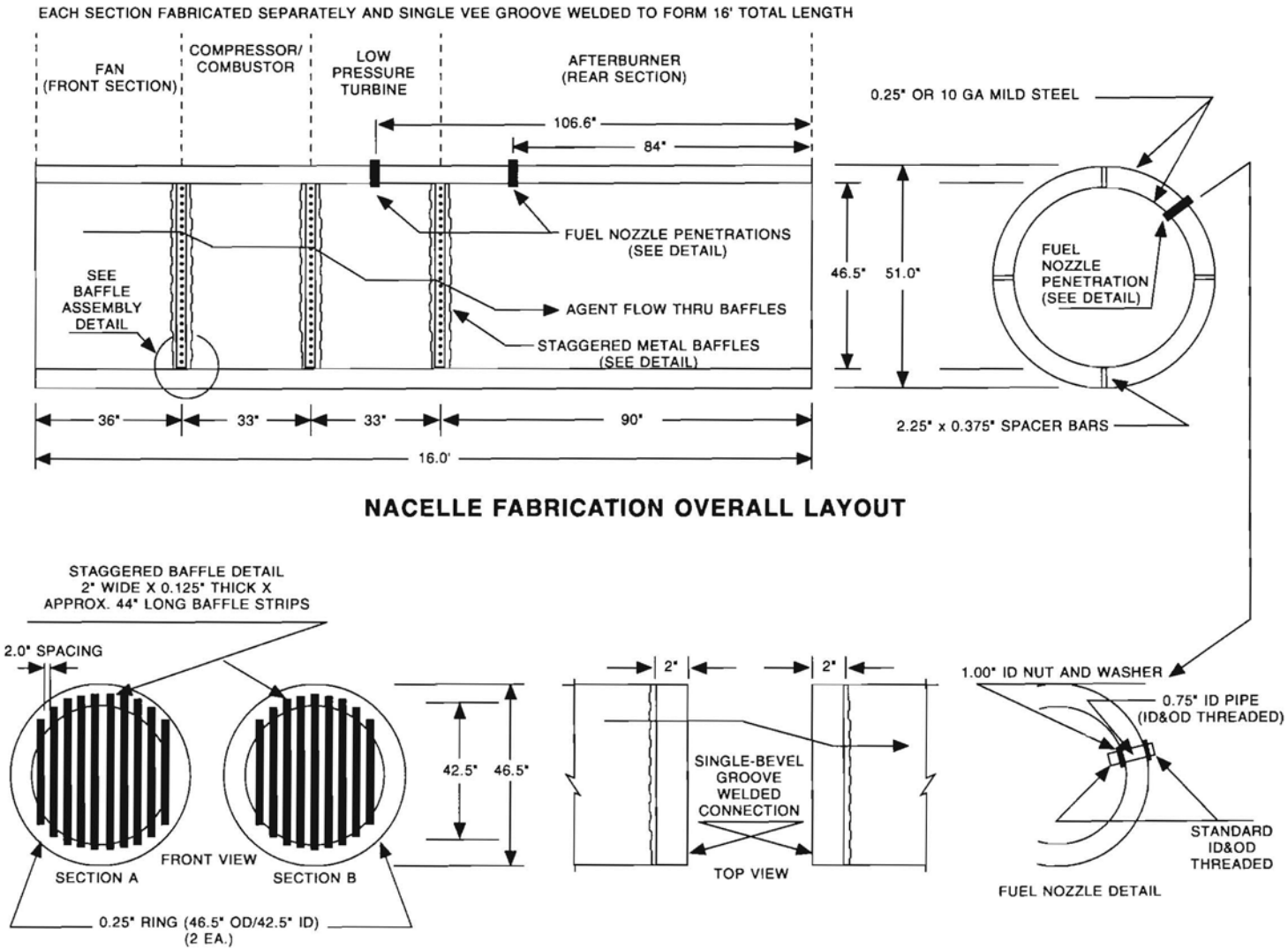

FIGURE 3. F-100 ENGINE NACELLE TEST APPARARTUS FABRICATION DRAWING, PAGE 1 OF 3

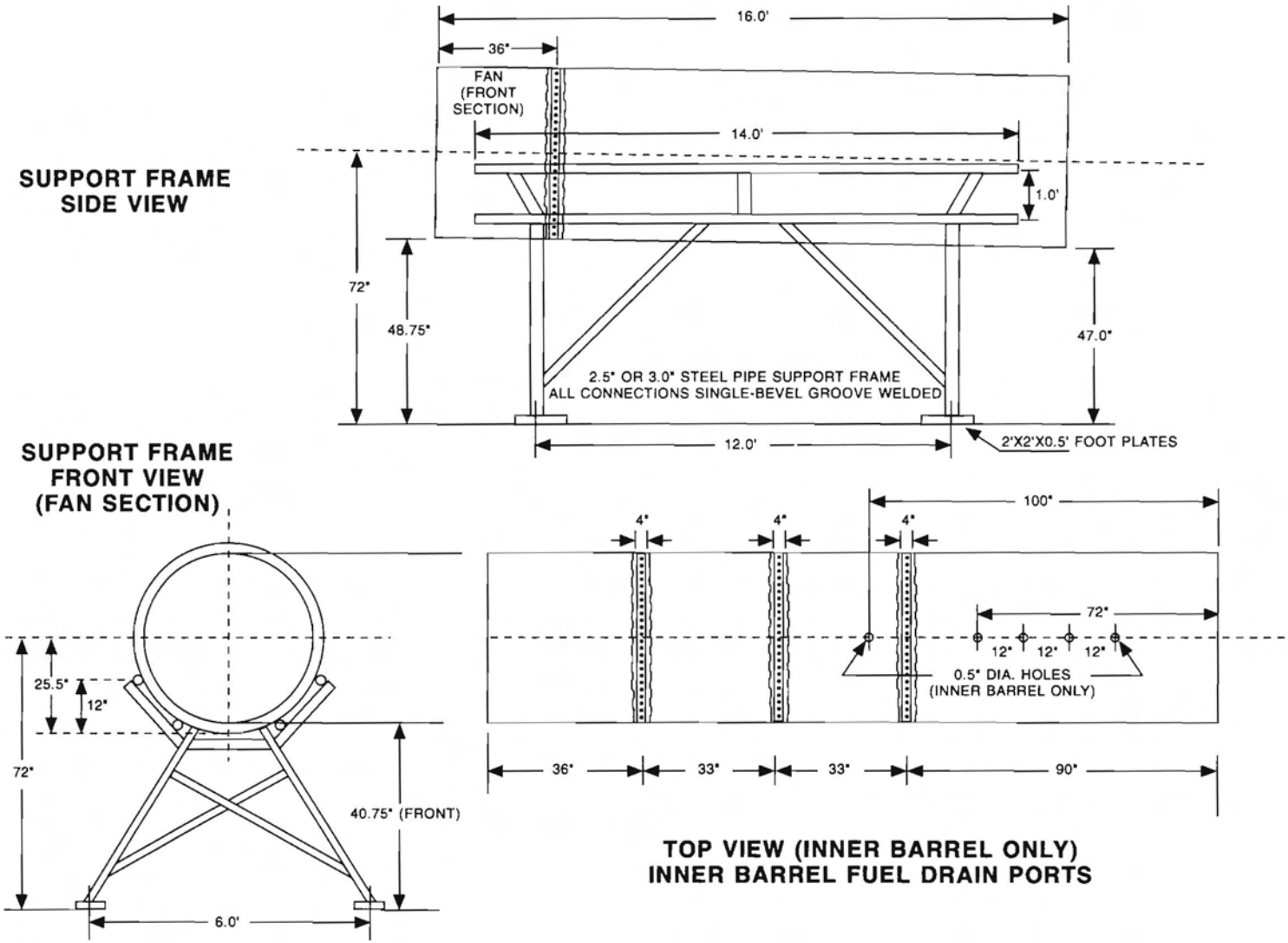

FIGURE 3. F-100 ENGINE NACELLE TEST APPARARTUS
FABRICATION DRAWING, PAGE 2 OF 3

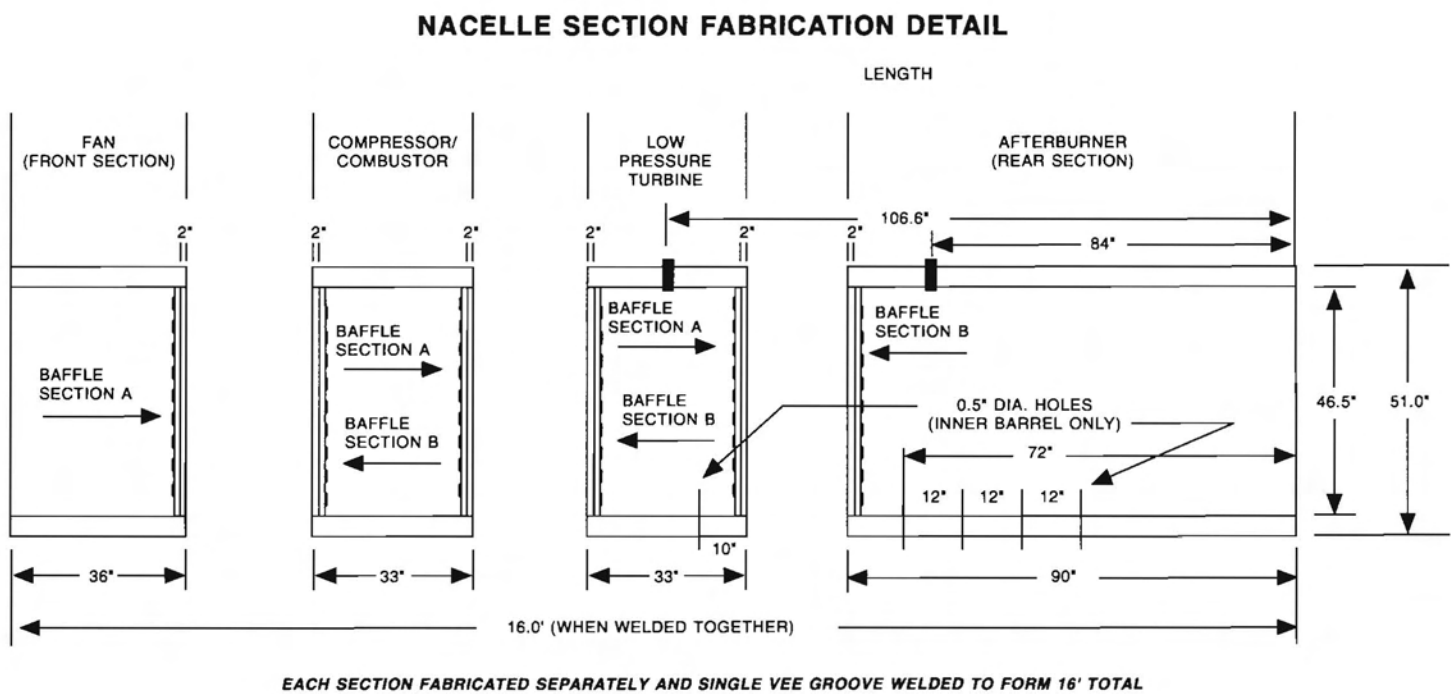

FIGURE 3. F-100 ENGINE NACELLE TEST APPARARTUS FABRICATION DRAWING, PAGE 3 OF 3

90-second preburn, the fire was attacked using the 150-pound Amerex extinguisher. Using the proper technique for this situation, the firefighter approached the wheel from a direction perpendicular to the axle. As an additional safety precaution, the aircraft tire was deflated prior to testing. The test objective was to extinguish the fire as rapidly as possible. See figure 1D, for details.

2.7 AGENT THROW-RANGE TESTS.

The agent specific effective throw range of the Amerex Model 600 (150-pound) extinguisher was assessed by discharging Halon 1211, perfluorohexane, and Halotron I over a linear array of fire pans. The eleven 4-inch-tall, 11-inch-diameter pans were spaced 36 inches from center to center. Each pan contained 1/4 inch of fuel (13 oz.) floated on 1/2 inch of water; 3 1/4 inches of freeboard was maintained on the pans. At 30 seconds after the last pan was ignited, the agent was discharged from the fixed nozzle located 21 feet from the first pan with a horizontal orientation. The nozzle was positioned 32 inches above and parallel to the ground. The extinguishers were allowed to fully discharge. The test objective was to establish the maximum effective throw range for each candidate agent.

These tests were conducted indoors to eliminate any effects of wind. In order to minimize personnel exposure to hazardous decomposition products resulting from interaction of the halogen-based agents with the fire, the fire extinguishers were remotely activated. Videotape and subsequent limited entry into the building were used to measure the results of the tests. Table 7 shows the various configurations of the pans.

2.8 DATA COLLECTION.

Two video cameras were used to record all test activities. Dozens of still photographs were taken to record significant events. All pertinent test data were recorded. Standard weather data including wind direction and velocity, temperature, and relative humidity were recorded for each test.

3. HALOTRON I DESCRIPTION.

Halotron I is a blend consisting mainly of 2,2-dichloro-1,1,1-trifluoroethane (HCFC-123). This liquid component is provided in bulk with a pressurization of argon (the Halotron I base). The base liquid component is loaded into the extinguisher which is then pressurized to the final extinguisher pressure with a compressed gas mixture of tetrafluoromethane and argon (the Halotron I expander gas). The expander gas serves as the propellant/dispersion component of the Halotron I system, which together with a simple nozzle tip modification, combine to optimize agent performance. Unlike Halon 1211, Halotron I does not use nitrogen as a propellant.

Halotron I requires changes in the elastomer materials used on the extinguisher. It also requires a slightly modified fire-fighting technique incorporating rapid sweeps which were used in most of the fires described in this report.

Servicing of the Halotron I agent was accomplished in a similar manner to Halon 1211. The liquid component can be pushed by gas pressure or pumped into the fire extinguisher and then the Halotron I expander gas (from a 43-liter cylinder of compressed gas) was added to bring the extinguisher up to its final pressure. To make the filling process as convenient as possible for these tests, a filling console was used. This console consisted of a manifold of small tube piping, valves, a pressure gauge, and a vacuum gauge. A simple manifold configuration was used by ARA personnel to fill fire extinguishers with Halon 1211.

As shown previously in the text, table 1 shows a comparison of properties for Halon 1211, perfluorohexane, and Halotron I. Table 2 shows a comparison of the operating parameters of Halon 1211 and Halotron I in the Amerex Model 600 stored pressure type 150-lb wheeled fire extinguisher.

4. FIRE EXTINGUISHER TEST HARDWARE.

All initial tests were conducted with the Amerex Model 600 wheeled, stored pressure type 150-pound Halon 1211 fire extinguisher. The extinguishers used for testing were at least five years old and were temporarily pulled from service from the Crash Fire Rescue unit at Tyndall Air Force Base.

The unit itself is constructed of mild carbon steel. The dip tube is 3/4 inch diameter, the valve is 1/2 inch diameter, and the 50-foot hose is 3/4 inch diameter. The internal volume of the extinguisher is 4,350 cubic inches (71.3 liters). The normal charge amount of Halon 1211 in this unit is 150 lbs (68 kg) which equates to a 53.2 percent liquid fill ratio.

It was determined during the early development of the Halotron I system in this model extinguisher that because of the inherent pressure drop of the hose/valve/dip tube combination, there was a tendency for the agent to chug toward the end of discharge when 150 lb of Halotron I (64.4 percent liquid fill ratio) were used. This effect was minimized when a lower liquid fill ratio was used. Halon 1211 and some replacement candidates also chug under certain circumstances during discharge in the Amerex unit.

It was determined that approximately a 130-pound (59.1-kg) charge of Halotron I (56.0 percent liquid fill ratio) provided optimum performance. This was demonstrated in full-scale field tests at the Marine Corps Air Station (MCAS), Beaufort, South Carolina, and in the initial testing at Tyndall Air Force Base, in March 1993. FAA and USAF personnel were aware of the basis for the use of this lower fill ratio. The pressure utilized was 240 psig, compared to a standard 200-psig pressure used with Halon 1211. The 130-pound charge in combination with a nozzle tip change on the Halotron I version yields an approximate 37-second total discharge time, which compares to a 43-second total discharge time for Halon 1211.

The Halotron I system is based on HCFC-123. This chemical interacts with elastomers differently than Halon 1211. The stem seal and collar O-ring elastomer material (Buna N) used with Halon 1211 on the Amerex unit will swell excessively when exposed to the HCFC-123 and, therefore,

the material used in the stem seal and collar O-ring was changed to a more compatible material for this testing.

The nozzle tip used with Halon 1211 in the Amerex Model 600 has an orifice diameter of 0.375 inch (9.5 mm). As part of the optimization method used in the Halotron I system, the standard nozzle tip used with Halon 1211 was replaced with one constructed of a different geometry and orifice diameter. A 0.551-inch (14-mm) orifice diameter was used with Halotron I on the Amerex Model 600 in the initial formal testing.

The most widely cited estimate of Amerex Model 600 Halon 1211 fire extinguishers in one of its evolution's now in the inventory of the U.S. Air Force is 18,000. Therefore, a Halon 1211 replacement agent that is adaptable and performs satisfactorily in this model will have a large impact on the U.S. Air Force effort to reduce the use of Class I ozone depleting substances.

5. TEST RESULTS.

There were several series of tests conducted over an eighteen-month period. These tests led to the full optimization of the Halotron I fire-extinguishing system.

5.1 THREE-DIMENSIONAL, INCLINED-PLANE TEST.

The official inclined-plane tests were conducted on March 24, 1993. All tests were conducted in the same manner according to the test plan. Data for the official tests are presented in table 3.

The data show that Halotron I was very effective on this fire scenario. For Halotron I, the average extinguishment discharge time was 15.8 seconds and the average amount required for extinguishment was 63.5 lb, whereas for Halon 1211 the values were 22.4 seconds and 75.5 lb. It was decided by the field test director that one Halon 1211 test was a sufficient characterization for baseline purposes. Therefore, discharge time for extinguishment with Halotron I was 30 percent less and the agent amount was 16 percent less than for Halon 1211 on this fire.

It was anticipated that this fire would be very difficult to extinguish for Halon 1211 replacement agents. This running fuel fire scenario is three-dimensional and presents a unique challenge for the firefighter because of the combination of running fuel and a hot metal reignition source at the edges of the ramp and at the base of the pan. This scenario is typical of several types of fires commonly encountered in the past where Halon 1211 was used in a flight line application. It is very significant that Halotron I actually required less agent and time to extinguish this difficult fire than Halon 1211.

TABLE 3. THREE-DIMENSIONAL, INCLINED-PLANE TEST RESULTS

DATE	AGENT	TEST DESIGNATION	EXTINGUISHED	DISCHARGE TIME (SEC)	AMOUNT USED (LB)	WIND VELOCITY (MPH)
3/18/93	Halon 1211	2	yes	9	36.5	1-2
3/18/93	Halotron	3	yes	33	119.5	8-14*
3/24/93	Halotron	2-a	yes	10**	46.5	5
3/24/93	Per. C^6	4	yes	28	128.0	1
3/24/93	Halotron	5	yes	13**	60.0	6
3/24/93	Halon 1211	7	yes	23	75.5	1
3/24/93	Halotron	9	yes	23	84.0	4.5
3/25/93	Per. C^6	1	yes	36	147.5	1
3/25/93	Per. C^6	4-b	yes	.40	130.5	3.5
6/15/93	Halotron	1-b	no***	33.5	139.5	4
6/15/93	Halotron	2-b	no***	36	147.5	6-10
6/15/93	Halotron	5	yes	17	75.0	3
6/15/93	Halotron	6	yes	28	134.0	3

* Wind velocity far exceeded test protocol yet Halotron I was still able to extinguish test fires.

** Halotron had the best average results on the official test day.

*** Halotron I system engineers were trying different nozzle configurations on both of these failed tests. These tests had no reflection on the official test protocol. Throughout this program American Pacific personnel tried various ideas to further optimize their product.

5.2 SIMULATED ENGINE NACELLE RUNNING FUEL FIRE TEST.

The official simulated engine nacelle running fuel fire tests were conducted on March 24-25, 1993. As previously noted, all official tests were conducted without a curbed-in area on the 30- by 30-foot concrete pad. This differed from the March 1993 Test Plan. Follow-up testing of the fully optimized system continued into 1994 and was successful in extinguishing the running fuel engine nacelle fire. All tests were conducted with 24 gallons of fuel accumulation on the concrete at the time of ignition. As per the test plan, preburn for all tests was 15 seconds. Data for the official tests is presented in table 4.

This fire scenario is a very severe test for a clean gaseous agent and was difficult for both Halotron I and Halon 1211. It was apparent in the tests that were conducted that the fire is *very sensitive to wind conditions and the technique of the firefighter*. For these tests, the nacelle test apparatus was fixed regardless of wind direction. Occasionally, wind direction was parallel to the length of the nacelle and from the back side, this greatly increased the intensity of the fire through the nacelle. Excessive wind speed causes the agent to be carried away so that the firefighter loses his optimum ability to control the fire. To be sure, in the real world, there will be wind conditions that will be severe, but it must be remembered that the objective of these tests was to scientifically compare the effectiveness of Halotron I to Halon 1211, so that conditions for this comparison should be the same and repeatable. High-velocity wind conditions in a certain direction were shown to make this fire very difficult for Halon 1211.

Although Halotron I did not extinguish any of the official tests, on all of the tests, most notably test 6 on March 24, the agent controlled the fire on the ground and in the nacelle and a different angle of attack would have most likely extinguished the fire. It was generally concluded with a little more agent application time the fire may have been extinguished. This was verified when the optimized twin agent 500-pound capacity bottle system was used.

This fire does represent a type of scenario faced by Halon 1211 in the past, namely, protection of expensive aircraft engines. According to available information from the U.S. Air Force and U.S. Navy, this type of fire is approached with both foam and dry chemical agents to control the fire outside of the nacelle area while the clean agent is applied to the engine area itself.

5.3 DRY-POOL FIRE EXTINGUISHMENT TEST RESULTS.

The dry-pool fire extinguishment tests were conducted on March 26, 1993. The tests were conducted in accordance with the above description. Test data for these tests are presented in table 5.

The limited data on this test indicate that it takes approximately 41 percent more discharge time and 50 percent more agent to extinguish dry-pool fires with Halotron I as with Halon 1211. Based on this limited data, the performance of Halotron I relative to Halon 1211 in this dry-pool scenario is comparable with the testing at MCAS, Beaufort, SC, where large pool fires were conducted on water.

TABLE 4. SIMULATED ENGINE NACELLE RUNNING FUEL FIRE TEST RESULTS

DATE	AGENT	TEST DESIGNATION	EXTINGUISHED	DISCHARGE TIME (SEC)	AMOUNT USED (LB)	WIND VELOCITY (MPH)
3/13/93	Halon 1211	1-a	yes	15.8	77.5	10
3/19/93	Halotron	1-b	yes	21.0	87.0	7-10
3/23/93	Halotron	1	no	38.5	117.5	4
3/23/93	Halotron	2	no	38.0	120.0	4-5
3/23/93	Halotron	3	no	33.0	114.5	4
3/23/93	Halon 1211	5	yes	14.0	49.5	7
3/24/94	Halotron	1	no	33.0	113.0	3
3/24/93	Per. C[6]	3	no	45.0	136.5	1
3/24/93	Halotron	6	no	36.0	118.0	1-3
3/24/93	Per. C[6]	8	no	42.0	147.0	4
3/24/93	Halotron	10	no	40.0	125.0	> 5
3/25/93	Halotron	2	no	34.0	115.0	> 5
3/25/93	Halon 1211	5	no	37.0	119.0	3
3/25/93	Per. C[6]	3	no	43.0	139.0	3
3/25/93	Halon 1211	7	yes	15.0	58.0	3-5
3/25/93	Halotron	9	no	34.0	116.5	5-6
6/15/93	Halotron	3-c	yes	26.0	129.5	4
6/15/94	Halotron	4-a	yes	37.0	147.5	4
6/16/93	Halotron	1-c	yes	33.0	126.5	2
6/16/93	Halotron	2-c	no	35.0	146.0	>8
6/16/93	Halotron	4-b	no	33.0	143.0	7
6/16/93	Halotron	3-b	no	36.0	146.5	6
10/22/93	Halotron	1-b	no	42.0	179.0	>6

TABLE 4. SIMULATED ENGINE NACELLE RUNNING FUEL FIRE TEST RESULTS (CONTINUED)

DATE	AGENT	TEST DESIGNATION	EXTINGUISHED	DISCHARGE TIME (SEC)	AMOUNT USED (LB)	WIND VELOCITY (MPH)
Optimized twin-agent truck unit manufactured by Fire Combat used for the following tests						
10/28/93	Halotron	2-b	no	58.0*	179.5	> 7.5
10/29/93	Halotron	5-b	yes	29.0	140.0	1-3
10/29/93	Halotron	7-b	yes	26.0	111.0	5
10/29/93	Halotron	3-1	no	37.0	188.0	1-4
4/27/94	Halotron	1-ap	yes	18.6	150.8	3
4/27/94	Halotron	2 ap	yes	18.3	143.6	3
8/15/94	Halotron	1-d	yes	12.0	114.5	1-2
8/16/94	Halotron	2-d	yes	28.0	233.0	5-11
8/16/94	Halotron	3-d	yes	37.0	336.5	2.5-6

* Check Valve Malfunctioning, No Booster Operation.

TABLE 5. DRY-POOL FIRE EXTINGUISHMENT TEST RESULTS

DATE	AGENT	TEST	FIRE AREA FT^2	FUEL QUANTITY (GAL)	EXTINGUISHED	DISCHARGE TIME (SEC)	AGENT USED (LB)	WIND SPEED (MPH)
3/26/93	Halon	1	200	9	yes	6.0	25.0	3-5
3/26/93	Halon	2	200	7	yes	4.5	20.0	6-7
3/26/93	Halotron	3	200	7	yes	7.4	34.0	3-5
3/26/93	Halotron	4	300	10	yes	6.1	29.0	3-5
3/26/93	Halotron	5	400	11	yes	9.0	45.0	3-5
3/26/94	Halotron	6	800	15	yes	21.0	87.5	6
3/26/93	Per. C^6	7	800	15	yes	18.0	81.0	5
3/26/93	Halon	8	800	15	yes	13.0	48.0	5
3/26/93	Per. C^6	9	200	7	yes	5.0	33.5	4
3/26/93	Per. C^6	10	300	10	yes	8.0	44.0	4
3/26/93	Per. C^6	11	400	11	yes	13.0	53.5	4

The engine nacelle fire called for 20 gallons of fuel on the ground as well as continually flowing fuel during the tests. This test was started with over a 1200 ft^2 area of fire before attacking the nacelle. This explains some of the difficulty in extinguishing this test scenario. Halon 1211 was unable to extinguish at least one of the running fuel engine nacelle fires.

5.4 SIMULATED WHEEL WELL FIRE TEST RESULTS.

The simulated wheel well fire tests were conducted on March 25, 1993. The tests were conducted in accordance with the procedure described above. Ignition of the hydraulic fluid was not easily accomplished. Test data for these tests are presented in table 6.

Each test used the same basic setup. In each case the tire appeared to be slightly more involved after each preburn. None of the candidate agents had particular difficulty in making the extinguishment.

The test results here indicate that Halotron I was easily capable of extinguishing hydraulic fluid based fires that would typically be encountered on the flight line.

5.5 AGENT THROW-RANGE TEST RESULTS.

The agent throw-range tests were conducted on April 20-21, 1993, inside a building at Tyndall AFB. The test procedures used for this test were modified slightly from the March 1993 in the field test plan. The test results for Halon 1211 are presented in table 7. Test results for Halotron and perfluorohexane are contained on this same table.

These tests indicate that Halotron I has a less effective *static* throw range than Halon 1211, however, as has been noted, the Halotron I agent requires a different technique than Halon 1211 to extinguish pan fires which require movement of the nozzle to help disperse the agent over an area. Therefore, if a nonstatic based test configuration was used, it could be expected that the performance of the two agents would be closer.

TABLE 6. SIMULATED WHEEL WELL FIRE

DATE	AGENT	TEST DESIGNATION	EXTINGUISHED	DISCHARGE TIME (SEC)	QUANTITY USED (LB)	WIND VELOCITY (MPH)
3/25/93	Halon	6	yes	4.0	12.0	3
3/25/93	Halotron	8	yes	8.5	40.0	5-6
3/25/93	Per. C^6	10	yes	11.0	48.5	8

Each test used the same basic setup. In each case the tire appeared to be slightly more involved after each preburn. None of the candidate agents had particular difficulty in making the extinguishment.

TABLE 7. SIMPLE THROW-RANGE TESTS

All throw-range tests were conducted with remote nozzle control inside a closed-up building. One hundred and fifty-pound bottles of agent were expelled during the tests.

Sample	Halon	PER. C^6	HALOTRON
0	X	0	0
0	X	0	0
0	X	0	0
0	X	X	0 X
0 30′	X ALL PANS EXTINGUISHED	X	0 X
0	X	X SEVEN PANS EXTINGUISHED	0 X
0	X	X	0 X SEVEN PANS* EXTINGUISHED (OPTIMIZED)
0	X	X	X X
0	X	X THREE PANS EXTINGUISHED	X X
0	X	X	X X
21′			21′
^ NOZZLE POSITION	^ NOZZLE POSITION HALON	^ NOZZLE POSITION PER. C^6	^ NOZZLE POSITION HALOTRON

0 = pan not extinguished X = pan extinguished

* Halotron I system improved by 100% after optimization work was completed on nozzle and booster tank system was developed. From three to seven pans for Halotron I optimized. Neither Halotron I nor perfluorohexane throw quite as well as Halon 1211. Nozzle was positioned 21 feet from first pan as noted.

6. BOOSTER MODIFICATION 1.

At the conclusion of the test series in March 1993, the test data were reviewed by FAA, USAF, and American Pacific Corporation personnel. It was noted that under normal operating conditions, the Halotron I fire suppression system in the Amerex Model 600 stored, pressure type Halon 1211 extinguisher with a reduced fill ratio (approximately 130-133 lb of agent) exhibited chugging or two-phase flow, starting at approximately 20-25 seconds into the discharge. This was because of the inherent pressure drop associated with the hose/valve/dip tube combination. This characteristic was also evident with the agent during testing at Marine Corps Air Station, Beaufort, SC. This chugging or pulsing of the agent stream reduces effectiveness of the agent to some extent; although the agent will still put out significant fires late in the discharge. This was shown in some of the tests that were conducted. The effectiveness of Halotron I and Halon 1211 was reduced at this point in the discharge in any event because of the decrease in flow rate (lb/second). This results naturally from the decreasing cylinder pressure in the extinguisher as both the pressure head volume increases and propellant is partially discharged. Typically, when extinguisher manufacturers evaluate agent-hardware combinations, they look at the performance at two-thirds of the total discharge time. Typically if the fire is going to be extinguished, it is extinguished by the two-thirds mark because of the higher (optimum) flow rate occurring during this part of the discharge and the agent has the most effect on the fire. In reality, the end of the discharge is typically more of a reserve for the firefighter.

It was noted that other agents including Halon 1211 (most notably on March 25 in test 5 of the simulated engine nacelle running fuel fire) exhibited pulsating discharges dependent on the conditions at the time. It was at this time that it was mutually agreed that a hardware modification should be explored as an option for the Amerex Model 600 stored, pressure type Halon 1211 extinguisher for use with the Halotron I fire suppression system to optimize performance.

Two options were explored. One option entailed using a larger dip tube and valve in combination with a smaller diameter hose on the Amerex Model 600. Preliminary discharge testing with this configuration indicated that chugging characteristics were slightly reduced.

The second option was the addition of a booster cylinder which appeared to produce much more significant results. The objective of this configuration was to maintain pressure above a certain critical calculated pressure through the entire discharge of the extinguisher.

Modification 1 was designed by American Pacific Corporation/Halotron, Inc. personnel with the following components procured from various suppliers:

a. A 7.7-liter (469-in^3) steel booster cylinder with a standard CGA 580 valve attached by a bracket to the back of the existing Amerex 600 unit.

b. A single-stage diaphragm/spring pressure regulator (rated to 6000 psig) with a minimum rated output pressure of 250 psig and a 70-scfm flow rate.

c. A ½-inch spring loaded poppet check valve, with a 1-psi cracking pressure and flow rate of 80 scfm at 1200 psig.

d. A high-pressure ½-inch-diameter, 2-foot-long, stainless steel braided hose with ½-inch swivel JIC connections.

e. One 18- by 2- by ¾-in. carbon steel counter balance weight with U-bolt connections.

This Booster Modification was delivered to Tyndall AFB for discharge and fire testing in June 1993. For this series of tests, the booster cylinder was pressurized with Halotron I expander gas to 1200 psig. Starting pressure in the extinguisher itself was 200 psig (as opposed to the nonbooster which started at 240 psig). The nozzle tip used with modification 1 was the same geometry as the 14-mm-diameter nozzle used with the nonbooster version except that orifice size was reduced to a 11.5 mm diameter for most tests. A 12-mm nozzle was used on two of the tests. This reduction from 14 mm diameter was made to maintain appropriate total discharge times with the increased pressure in the extinguisher.

It was arbitrarily decided that the fill ratio would be increased so the agent amount by weight would be the same as Halon 1211 (150 lb). The charge amount used with booster modification 1 could have been higher (up to 180 lb or 81.8 kg) as was the case later when booster modification 2 was tested with a 180-lb charge and a 14-mm nozzle. Total discharge time with this equipment configuration was approximately 35 seconds. Chugging was not apparent in any of the tests until after approximately 31 seconds of discharge. Three-dimensional, inclined-plane running fuel fire test data are shown in table 8. The simulated engine nacelle running fuel fire test results are shown in table 9. Dry-pool fire test results are shown in table 10.

The data on the configuration in the above tests is skewed by the effects of variation in fire-fighting technique and severe wind conditions on the nacelle fire. The combination of charge amount and the smaller nozzle used in this configuration resulted in a lower initial flow rate than the nonbooster configuration. This is significant because of the above described importance of the two-thirds discharge rate. Even though the total average flow rate is higher for booster modification 1, the initial flow rate (lbs/second) with the smaller diameter nozzle is lower so that the effect on the fire at this critical part of the discharge was less than the nonbooster configuration.

Taking this into consideration, however, the objective was met because the occurrence of chugging was virtually eliminated with the booster cylinder which maintained cylinder pressure above the critical point over the entire discharge time. The discharge at the end was smoother than the nonbooster configuration.

It was decided that the booster design concept should be presented to Amerex Corporation for their review. They proceeded with modifications to the extinguishing equipment. After this was accomplished, further testing was scheduled with the Amerex designed booster system (booster modification 2).

TABLE 8. HALOTRON I BOOSTER MODIFICATION 1 TEST RESULTS, INCLINED-PLANE TESTS (JUNE 1993)

DATE	TEST NO.	EXTINGUISHED	DISCHARGE TIME (SEC)	AMOUNT USED (LB)	WIND VELOCITY (MPH)	COMMENTS
6/15/93	1	NO	35	140	N/A	Approached fire from wrong side
6/15/93	2	NO	36	147	6-10	Fire came back as firefighter walked up ramp, high wind factor
6/15/93	5	YES	17	77	1-4	Good application
6/15/93	6	YES	28 *1	134	1-5	Winds gusty

Nozzle diameter 11.5 mm unless noted.
* 1 Nozzle diameter was 12 mm.

TABLE 9. HALOTRON I BOOSTER MODIFICATION 1 TEST RESULTS, SIMULATED ENGINE NACELLE RUNNING FUEL FIRE (JUNE 1993) (1 OF 2)

DATE	TEST NO.	EXTINGUISHED	DISCHARGE TIME (SEC)	AMOUNT USED (LB)	WIND VELOCITY (MPH)	COMMENTS FUEL JP-4
6/15/93	3	YES	29.5	131.5	4	5 gallon on ground, to start
6/15/93	4	NO	36.5	150.0	5-9	5 gallon on ground to start, winds gusty
6/16/93	1b	YES	27.9	129.0	1-4	10 gallons on ground to start
6/16/93	2b	NO	35.0*	150.0 Approx.	2-6	10 gallons on ground at start, wind through back of nacelle, large fire ball
6/16/93	3b	NO	37.5	150.0 Approx.	6-8	15 gallons on ground, wind through back, large fire ball out front

TABLE 9. HALOTRON I BOOSTER MODIFICATION 1 TEST RESULTS, SIMULATED ENGINE NACELLE RUNNING FUEL FIRE TESTS (JUNE 1993) (CONTINUED)

DATE	TEST NO.	EXTINGUISHED	DISCHARGE TIME (SEC)	AMOUNT USED (LB)	WIND VELOCITY (MPH)	COMMENTS FUEL JP-4
6/16/93	4b	NO	33	140	6-8	10 gallon on ground, wind major factor, chugging during discharge, seal enlarged
6/16/93	5b	NO	32.3	140	6-8	10 gallon on ground, fire ball pushed from back to front engine nacelle

While extinguishing fire, noticeable chugging was still observed, a second modification recommended.
It was generally agreed that if slightly more agent had been available most tests would have been successfully extinguished.

TABLE 10. HALOTRON I BOOSTER MODIFICATION 1 TEST RESULTS, DRY-POOL FIRES, APPROXIMATELY 850 SQUARE FEET (JUNE 1993)

DATE	TEST NO.	EXTINGUISHED	DISCHARGE TIME (SEC)	AMOUNT USED (LB)	WIND VELOCITY (MPH)	COMMENTS FUEL JP-4
6/16/93	6b	NO	38*	150	6-11	Winds gusty, firefighter did not attack aggressively, held back, heated nacelle caused reignition
6/16/93	7b	NO	37.8	150	6-11	Winds gusty, firefighter did not attack aggressively, held back, remained out on cement pad

Gusty wind, major factor in nonextinguishments

7. BOOSTER MODIFICATION 2.

Amerex Corporation reviewed the booster modification 1 design and incorporated that information into their own design. Amerex Corporation conducted discharge tests with the design at their facilities in Alabama. A significant change was the inclusion of a quick-opening valve on the booster cylinder.

The Amerex hardware incorporated into this configuration included:

a. A 10.6-liter (647-in^3) steel booster cylinder with a standard CGA 580 valve attached by a bracket to the back of the existing Amerex 600 unit with a quick-opening capability.

b. A single stage diaphragm/spring pressure regulator (rated to 3000 psig) rated at 183 scfm at 2015 psig on supply side, 230 psig on the delivery side. The pressure regulator was set to 230 psig.

c. Two 16- by 3/16-in. high-pressure rubber hoses (rated to 3000 psig).

d. Two 1/4-inch female NPT spring loaded poppet check valves with a 1-psi cracking pressure and a flow rate of 80 scfm at 230 psig.

e. A pneumatic operated valve actuated by 230 psig with a standard ¾-inch hose connection.

f. A ¾- by ¼-inch reducer bushing for check valve connection to the extinguisher.

Because of the smaller diameter hoses going from the booster cylinder to the extinguisher the pressure flow gains were offset to some extent by the larger volume booster cylinder. The starting booster cylinder pressure was set at 2000 psig. This was done to maintain cylinder pressure above the critical level for the entire discharge.

The fire tests with this configuration were conducted at Tyndall AFB on October 28 - November 3, 1993. In order to further optimize performance and for the reasons stated in paragraph 6, the charge amount was increased to 180 lb (81.8 kg), a 77.5 percent liquid fill ratio, so that a larger diameter nozzle (14 mm or 0.551 inch) could be used and still maintain a desired minimum total discharge time.

The test results for the simulated engine nacelle tests conducted with modification 2 are shown in table 11. Test results for various dry-pool concrete fires conducted with this equipment are shown in table 12.

TABLE 11. HALOTRON I BOOSTER MODIFICATION 2 TEST RESULTS, SIMULATED ENGINE NACELLE RUNNING FUEL FIRE (OCTOBER 1993)

DATE	TEST NO.	EXTINGUISHED	DISCHARGE TIME (SEC)	AMOUNT USED (LB)	WIND VELOCITY (MPH)	COMMENTS FUEL JP-4
10/28/93	1c	NO	42	179.0	6-7	5 gallons on ground, winds gusty
10/28/93	2c	NO	58	179.0	7	Check valve faulty, booster not able to work
10/29/93	1d*	NO	37	188.0	1-2	Practice
10/29/93	2d*	YES	25	111.5	N/A	Practice
10/29/93	3d*	YES	27	140.0	N/A	10 gallons on ground

Notes: * During these tests fill height was being manipulated to determine what the right fill ratio was in the bottle.

TABLE 12. HALOTRON I BOOSTER MODIFICATION 2 TEST RESULTS, DRY-POOL FIRES (OCTOBER - NOVEMBER 1993)

DATE	TEST NO.	EXTINGUISHED	DISCHARGE TIME (SEC)	AMOUNT USED (LB)	WIND VELOCITY (MPH)	COMMENTS FUEL JP-4
10/28/93	4c*	YES	21	98	1-2	20 gallons on ground
11/2/93	1e*	YES	29	129	4-7	10 gallons onground
11/2/93	2e*	YES	30	148	n/a	20 gallons on ground
11/3/93	1f*	YES	21	98	n/a	Demonstra-tion for USAF group

Notes: * During these tests fill height was being manipulated to determine what the right fill ratio was in the bottle.

As the tests indicate, there was an improvement in performance with booster modification 2 over modification 1 as a result of the higher charge amount and larger diameter nozzle. Virtually all chugging was eliminated using booster modification 2.

8. VEHICLE QUANTITY CAPACITIES ISSUE.

During the process of approving the Halotron I product for aircraft rescue and fire-fighting use, the question of whether to require a costly retrofit of existing vehicles for this product to maintain the same fire fighting equivalency or to allow its use in existing vehicle systems with less costly modifications. Appendix A contains the information provided to FAA Washington, AAS-100, which led to the decision to utilize Halotron I in existing 500-pound capacity vessels. It should be noted that the USAF has made an operational decision to remove all Halon 1211 fixed systems from fire-fighting vehicles.

9. CONCLUSION.

The data and information gained through this test program are as follows.

a. The Halotron I agent was capable of extinguishing the subject JP-4 fuel-based simulated flight line type fires that were originally designed by the FAA for testing Halon 1211.

(1) Halotron I was more effective than Halon 1211 in extinguishing the difficult three-dimensional, inclined-plane running fuel fire test.

(2) Halotron I was comparable to Halon 1211 in extinguishing the dry-pool fire extinguishment fire test.

(3) Halotron I was comparable to Halon 1211 in extinguishing the simulated wheel well fire test.

(4) Halotron I was less effective than Halon 1211 in the agent throw-range fire tests.

(5) Halotron I was less effective than Halon 1211 in extinguishing the simulated engine nacelle running fuel fire test early in the test program. After booster modification 2 was accomplished to optimize the delivery system, Halotron I was able to extinguish these fires.

b. The filling methods for wheeled extinguishers with Halotron I are similar to those for Halon 1211, with the exception that Halotron I expander gas is used as the propellant/dispersion component instead of nitrogen.

c. The modifications necessary to deploy Halotron I in existing Amerex Model 600 stored pressure type Halon 1211 extinguishers are minor (stem seal, gasket, and nozzle tip).

d. Booster modification 2 which utilizes a 14-mm nozzle and a 180-pound charge in the Amerex Model 600 produced a noticeable decrease in chugging (pulsating flow) at the end of the discharge. Comparison tests conducted on the simulated engine nacelle running fuel fire show that agent performance was enhanced.

e. Although Halotron I did not extinguish all of the test fires, it did exhibit a strong ability to control the JP-4 fires. Through optimization of the delivery system an improvement in performance was achieved. Halotron has shown an equivalency of 1.5 pounds of optimized Halotron I, to 1 pound of Halon 1211.

f. Perfluorohexane did not extinguish the most severe fire, the 3-dimensional running fuel engine nacelle fire. But this product was not fully optimized with the delivery systems used in the early test program.

g. Comparing the replacement agents, Halotron I proved to be slightly more effective than perfluorohexane for extinguishing the five fire scenarios tested during this project. Halotron I was nearly twice as effective as perfluorohexane for extinguishing the inclined-plane, running fuel fires and 33 percent more effective than perfluorohexane for extinguishing the wheel well hydraulic fluid fires. Only Halotron I was fully optimized and extinguished the engine nacelle running fuel fire. Perfluorohexane and the optimized Halotron I were equally as effective in throw-range testing compared to each other but were slightly less effective in being thrown than Halon 1211.

h. Halotron I system should be considered as a suitable replacement for Halon 1211. A 1 1/2 pound to 1 ratio would still give satisfactory performance for most flight line fire scenarios.

Performance of the Halotron I system was improved by optimizing the Amerex extinguisher with an expander gas booster cylinder. The magnitude of the improvement was quantified since the optimized extinguisher was tested against the original fire test scenarios. Using the optimized extinguisher, the chugging problem was eliminated, and the agent discharge rate was increased by 36 percent. Additionally, the throw range was improved. The agent capacity of the extinguisher was increased from 130 to 180 pounds. With the booster installed the first two incline-plane fires were not extinguished. The third and fourth tests were extinguished successfully.

It should be understood that this was a continuing program. Each agent will benefit from further optimization of the delivery systems which are used to expel the agent. These tests are designed as the worst case situations for which any gaseous agent can be expected to perform.

Clean auxiliary agents are considered an economic option to dry powder and aqueous film forming foam (AFFF). If fire-fighting performance is the only issue and quick knock down of the fire is required to save the aircraft, dry chemical powders can be expected to exhibit equivalent performance to Halon 1211. Clean agents are offered as an economic alternative to removing engines for minor nacelle fires when dry chemical is applied to the engines.

10. REFERENCES.

Geyer. G B., Evaluation of Aircraft Ground Fire-Fighting Agents and Techniques, FAA-RD-71-57, AGFSRS 71-1, 1972

Geyer, G. B., Equivalency Evaluation of Fire-Fighting Agents and Minimum Requirements At U.S. Air Force Airfields, DOT/FAA/CT-82/109, 1982

Rocheford M. A., Dees B. R., Risinger C. W., Halon 1211 Replacement Agent Evaluation-Perfluorohexane and Halotron I, WL-TR-93-3520

APPENDIX A

This information was provided to FAA Washington, AAS-100 for their consideration in determining the quantity of agents to be carried on FAA funded rescue vehicles.

Halotron I in ARFF Vehicles: Quantity Required

FAA Technical Center, AAR-410

Joseph Wright

SUMMARY

Halotron I has recently been approved as an alternate to Halon 1211 as a fire-fighting agent. Test results showed 50 percent more Halotron I is required for equivalent fire suppression, which raised a question as to whether or not ARFF vehicle capacity should be raised from currently required 500 to 750 lb.

Based on analysis of available data, 500 lb of Halotron I is generally sufficient for extinguishing fires for which the "clean agent" is intended.

It is recommended that the 500-lb vehicle capacity requirement not be increased when using Halotron I. In addition, it may be desirable to set a minimum agent requirement based on test data.

HALOTRON I - HALON 1211 EQUIVALENCY

Tests performed by the FAA Technical Center have shown that Halotron I is an effective "clean" agent for extinguishing fires. These tests have shown that approximately 50 percent more Halotron I than Halon 1211 by weight is required to extinguish similar fires.

REGULATORY BACKGROUND

Part 139.317 of the Federal Aviation Regulations set minimum standards for airport fire-fighting vehicles. If an airport uses a vehicle carrying only Halon 1211, the regulations require that vehicle to carry 500 pounds of Halon 1211.

Recent EPA regulations are effectively limiting use of Halon 1211 as a fire-fighting agent. Manufacturing has ceased, and cost of the material has risen some 1500 percent, from $3 to $45 per lb as of this writing. Some airports may determine that Halotron I is an attractive alternative at $7.50 to $10 per lb. However, recycled Halon will continue to be available for some time, and there is no requirement to replace it.

Utilizing the FAA Technical Center derived equivalency data, AAS-100 released a letter stating that Halotron I could be used as a replacement for Halon 1211, using the equivalency rating of

1.5:1. This has raised the question of whether or not vehicle capacity requirements should be increased from 500 to 750 lb.

QUANTITY OF AGENT REQUIRED TO EXTINGUISH FIRES:
FAA TECHNICAL CENTER TEST RESULTS

Tests using Halotron I were performed by the FAA Technical Center and U.S. Air Force between March 1993 and August 1994 and are documented in reference 1. Eighty-one individual tests representing the most common categories of fires expected to be extinguished with "clean agents" were performed, 60 of which used Halotron I. Due to testing constraints, only 150-lb bottles of Halotron could be used. As a result of this agent limitation, in 28 of these tests, fires were brought under control but not completely extinguished, and in 28 cases they were fully extinguished. It is estimated that all fires could have been fully extinguished with a nominal amount of additional agent. A histogram representing the results of these tests is shown below.

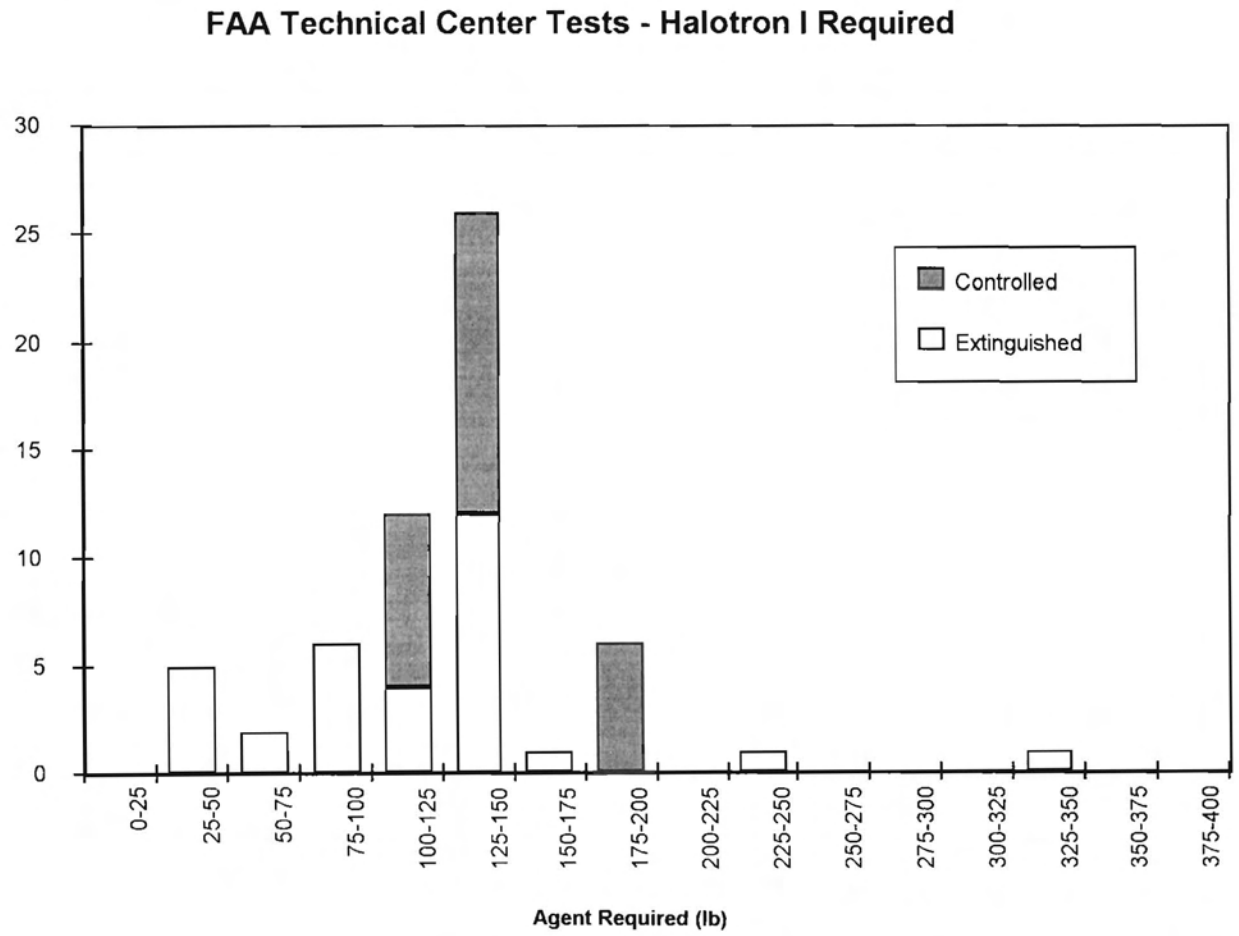

In the case of complete extinguishment, the average amount of agent expended was 115 lb. In only 2 of the 32 cases (6%) was more than 150 lb of Halotron required, i.e., 150 lb is sufficient for 94% of the cases.

In the case of controlling the fire, the average amount of agent expended was 145 lb, and the maximum amount used was 188 lb. It is estimated that, had the additional agent been available, all fires could have been extinguished with 250 lb of Halotron I.

OPERATIONAL EXPERIENCE DATA

Data collected by the US Air Force and Navy over the years 1992 to 1994 were analyzed to determine typical amounts of agent used in operational experience. No operational data for civilian operations is known at this time.

In military flight line operations, 150-lb bottles of Halon 1211 are generally available for engine fire extinguishment. In these data reported flight line incidents, the average amount of Halon 1211 used has been 109 lb. Using the equivalency rating of 1.5:1, this would equate to 165 lb, which correlates well with the data obtained in the FAA tests. Both the Air Force and the Navy have found the 150-lb Halon 1211 capacity to be adequate through 20 years of experience. The USAF has made the operational decision to remove Halon 1211 from all heavy rescue vehicles.

ORIGINATION OF THE 500-LB HALON REGULATION

The original process which defined the Rapid Intervention Vehicle (RIV) specification was reviewed (reference 2). Interviewing participants of that process indicated that an analysis of the preferred basis for the vehicle, a standard 3/4-ton pickup, was that it could carry a 1500-lb payload. Subtracting the weight of personnel, tank, and delivery system left approximately 500 lb for Halon 1211 or dry chemical. This correlates with a common sized vessel. The only operational requirement factored into the specification was the knowledge that approximately 100 lb of agent would be required to extinguish a typical flight line engine fire. Note that dual-agent trucks are generally based on 1-ton pickup trucks.

ANALYSIS

Reviewing the FAA test data show that, for those fires which were completely extinguished, 200 lb of Halotron was sufficient to extinguish the 97th percentile test fire. For the cases where insufficient agent was available to completely extinguish the fire, it is estimated by test personnel that 250 lb of Halotron would have been sufficient. Therefore, 500 lb of Halotron I provides a safety factor of 2 for inefficient application of the agent by inexperienced line personnel.

In military operational experience, 150 lb of Halon 1211 has proven to be adequate. The table below shows several bases for determining minimum Halotron I capacity:

Amount	Basis
225 lb	1.5 times military capacity of 150 lb
250 lb	Estimated maximum agent required in tests
375 lb	Estimated maximum agent required in tests times 1.5 safety factor
500 lb	Estimated maximum agent required in tests times 2.0 safety factor

CRASH VEHICLES USING HALON IN THE US FLEET

ARFF vehicles for 156 airports are listed in our current database. Of these, only six single-agent vehicles which use 500-lb Halon vessels are known. At all of the airports where these vehicles reside, dry chemical vehicles are also available, i.e., the Halon equipped vehicles are not needed to meet the index requirement of the airport.

RECOMMENDATION

In review:

- Continued use of recycled Halon 1211 is one option for airports to maintain a clean agent fire-fighting capability.
- Halotron I is effective in extinguishing typical fires. Analysis of test and military operational data indicates that 250 lb would be sufficient for relevant fires.
- The original 500-lb specification was based on vehicle capacity rather than operational experience.
- No airports are known at this time which depend upon a single-agent vehicle carrying 500-lb of Halon to meet their index requirements.

Based on these facts, it is recommended that the 500-lb requirement not be increased for using Halotron I. As a conservative measure, those airports using single-agent, Halon-only vehicles to meet their minimum index requirements may wish to increase the capacity of those vehicles to the full equivalency capacity of 750 lb. Since the number of vehicles that fit that description is low (none are currently known), the overall economic impact of such an upgrade should be relatively low.

In addition, the Airports Office may wish to consider setting a minimum vehicle quantity of streaming agent using one of the methods in the analysis above to serve as a rational basis for future discussions of additional agents which may appear.

REFERENCES

1. Wright, J.A., Full-Scale Test Evaluations of Halon 1211 Replacement Agents for Airport Fire Fighting, DOT/FAA/AR-95/87, October 1995.
2. Telephone conversations with four participants in the 1972 committee which defined Rapid Intervention Vehicle (RIV) requirements.
3. E. D. L Torkelson, TR, WADS Technical Report 59-463 Jan 1960.

☆ U.S. GOVERNMENT PRINTING OFFICE: 1995—704-761