COPY 1

AD 734 334

Report No. FAA-AV-71-4

A FIRST APPROXIMATION SATELLITE TERMINAL SYSTEM EVALUATION MODEL

JACK E. SNELL
DEPARTMENT OF CIVIL AND GEOLOGICAL ENGINEERING
Princeton University
Princeton, N.J. 08540

1972
NTIS
LIBRARY

AUGUST 1971

PROGRAM USER'S INSTRUCTION MANUAL

Availability is unlimited. Document may be released to the Clearinghouse for Federal Scientific and Technical Information, Springfield, Virginia 22151, for sale to the public.

Prepared for
DEPARTMENT OF TRANSPORTATION
FEDERAL AVIATION ADMINISTRATION
Office of Aviation Policy and Plans
Washington, D.C. 20590

This report was prepared for the Federal Aviation Administration, Office of Aviation Policy and Plans, under contract No. WI-71-3579-1. The contents of this report reflect the views of Princeton University, which is responsible for the facts and accuracy of the data presented herein. The contents do not necessarily reflect the official views or policy of the Department of Transportation. This report does not constitute a standard, specification, or regulation. Although considerable effort has been made to achieve accuracy and completeness, neither Princeton University nor the Department of Transportation can guarantee the operation of the computer program developed for this project.

TECHNICAL REPORT STANDARD TITLE PAGE

1. Report No.	2. Government Accession No.	3. Recipient's Catalog No.
FAA-AV-71-4		

4. Title and Subtitle	5. Report Date
A First Approximation Satellite Terminal System Evaluation Model - Program User's Instruction Manual	August 1971
	6. Performing Organization Code
7. Author(s)	8. Performing Organization Report No.
Jack E. Snell	
9. Performing Organization Name and Address	10. Work Unit No.
Department of Civil and Geological Engineering Princeton University Princeton, New Jersey 08540	11. Contract or Grant No. WI-71-3579-1
12. Sponsoring Agency Name and Address	13. Type of Report and Period Covered
Office of Aviation Policy and Plans Federal Aviation Administration Department of Transportation Washington, D. C. 20591	Program User's Instruction Manual
	14. Sponsoring Agency Code

15. Supplementary Notes

16. Abstract

A program user's manual to be used for computer programming of the "First Approximation Satellite Terminal System Evaluation Model" described in Federal Aviation Administration Report FAA-AV-71-1. The latter is designed to analyze the cost effectiveness of off-airport or satellite terminals as a means of relieving groundside congestion in major hub cities.

17. Key Words	18. Distribution Statement
Off-airport terminals, satellite terminals, airport access, passenger processing.	Availability is unlimited. Document may be released to the Clearing House for Federal Scientific and Technical Information. Springfield, Va. 22151

19. Security Classif. (of this report)	20. Security Classif. (of this page)	21. No. of Pages	22. Price
Unclassified	Unclassified	92	3.00 PC .95 MF

Form DOT F 1700.7 (8-69)

FIRST APPROXIMATION SATELLITE SYSTEM
EVALUATION MODEL (FASTSEM)
PROGRAM USER MANUAL

CONTENTS

I Introduction 1

Part One - The Basic FASTSEM Program

II Program Organization 4

III FASTSEM Computer Card Deck 11

IV FASTSEM Program Output 18

V Sample Program Runs. 23

Part Two - The FASTSEM Sensitivity Analysis Program

VI Sensitivity Program Organization 31

VII Sensitivity Program Computer Card Deck 34

VIII Sensitivity Program Output 36

IX Sensitivity Program Sample Runs. 41

APPENDICES

A. Glossary 46

B. Program Readouts 62

C. Traffic Intensities Program. 89

I. INTRODUCTION

This document is a user's manual for the computer programs of the FASTSEM (First Approximation Satellite Terminal System Evaluation Model) described in Federal Aviation Administration Report FAA-AV-71-1 by J.E. Snell.

The FASTSEM, First Approximation Satellite Terminal System Evaluation Model, is designed to analyze the cost-effectiveness of off-airport, or satellite terminals as a means of relieving groundside congestion in major hub cities. This model is comprised of interacting demand and supply submodels which are used iteratively to determine which of a variety of types of satellite terminal systems, STS, is most appropriate in a particular case. Two viewpoints of analysis are employed in the model. The first is the user's viewpoint which is represented in the model by the time and cost "impedances" encountered in all stages of processing between origin or destination and the airplane. The second viewpoint of analysis is the program cost-effectiveness of satellite terminal systems as an alternative to continued expansion of access highway and airport facilities capacity. For this view, the appropriate capital costs of satellite terminal, access, and airport facilities expansion are computed along with user benefits. The FASTSEM model logic, equations, and their derivations are documented in the above noted FAA report.

Two FASTSEM computer programs are described in this manual. The first is the basic FASTSEM program which is discussed in Part One. The second program is designed for use in analyzing the sensitivity of the basic FASTSEM to any of its parameters. The FASTSEM sensitivity program is discussed in Part Two of this manual.

PART ONE

The Basic FASTSEM Program

The FASTSEM program described below was designed as a policy analysis tool. It uses a common set of airport and STS technology data along with summary data for each of a number of hub cities to evaluate the "STS" and "No STS" options.

The user may choose to examine the results for all STS technologies for each hub city tested or he may choose to have the program determine and print the results for just the best Satellite Terminal System for each city.

II. PROGRAM ORGANIZATION

The FASTSEM program is divided into four parts, the main program and three subroutines. The first subroutine, STAB, calculates the value of G, the factor used to determine airport and STS (Satellite Terminal System) demands. The second subroutine, TIME, calculates time impedances and impedance ratios for the five STS technologies and the "No STS" case. The third, subroutine, COST, calculates the capital costs of facilities expansion with and without satellite terminal systems and the cost impedances and impedance ratios associated therewith.

The main program controls input and output, the operation of the subroutines, calculation of STS cost savings and benefit-cost ratios, and compiles summary data on the entire group of cities being considered.

To obtain printed results for each STS technology with from one to five satellite terminals in each case for every city the program user sets variable OPTION to any arbitrary value other than zero.

If OPTION is set equal to 0, the program automatically selects the STS technology and number of terminals that provide the largest benefit to cost ratio for each city. Further discussion of this feature is contained in Section III, DATA, and Section IV, OUTPUT. Sample problems with OPTION = 0 and OPTION $\neq$ 0 are included in Section V.

Operation of the program is easily followed by reference to Figure II-1, the program flow chart.

First, data describing the general technologies are read in. This data remains the same for all cities examined. Section III explains the data in detail. Next, variables holding summary information on costs for all cities and the number of cities examined are initialized to zero.

At this time, the data on the first city to be examined are read in. This data is explained in Section III of this manual. This step provides all of the information required for the execution of the program for one city.

Next, parameters describing the total market size and total access person demand are calculated.

With the values of K, N, CYCLE, TKT and CKS initialized, the convergence of demand loop is entered. In this loop, the three subroutines are called successively. At the beginning of each cycle the previously computed time and cost impedance ratios are used to calculate new values for the demand fraction G in subroutine STAB. After testing for the degenerate case of no satellite traffic, i.e., $G \doteq 1$, new cost and time impedances are computed. This loop ends when the process has been repeated a number of times equal to the value of the input variable LIMIT. Convergence to within the third decimal place has been noted consistently after about four cycles.

Having satisfactorily matched supply and demand in the convergence loop, the cost effectiveness of that system design is

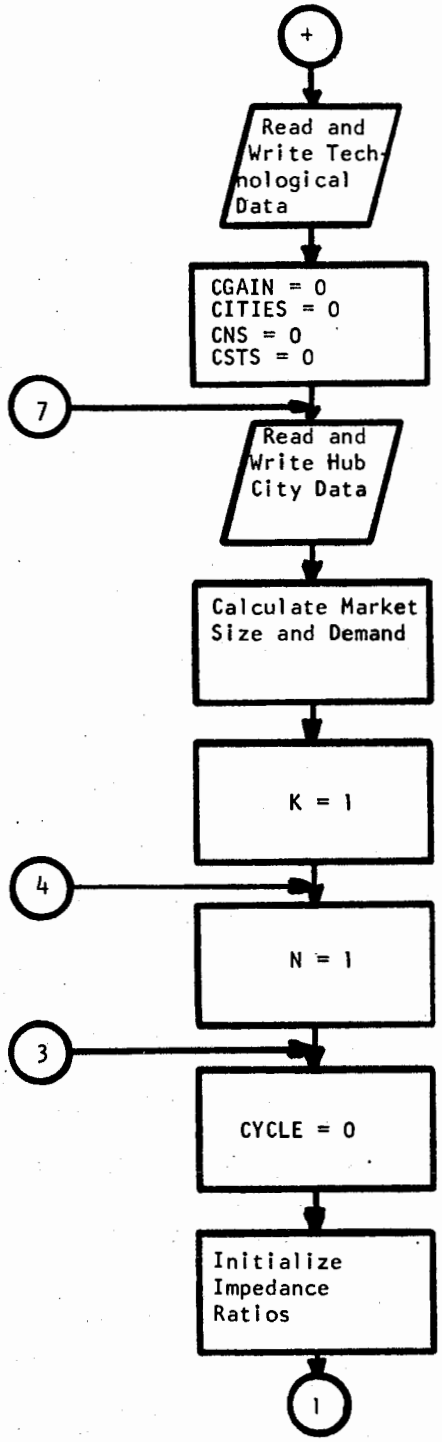

Basic FASTSEM Program Flow Chart

FIGURE II-1

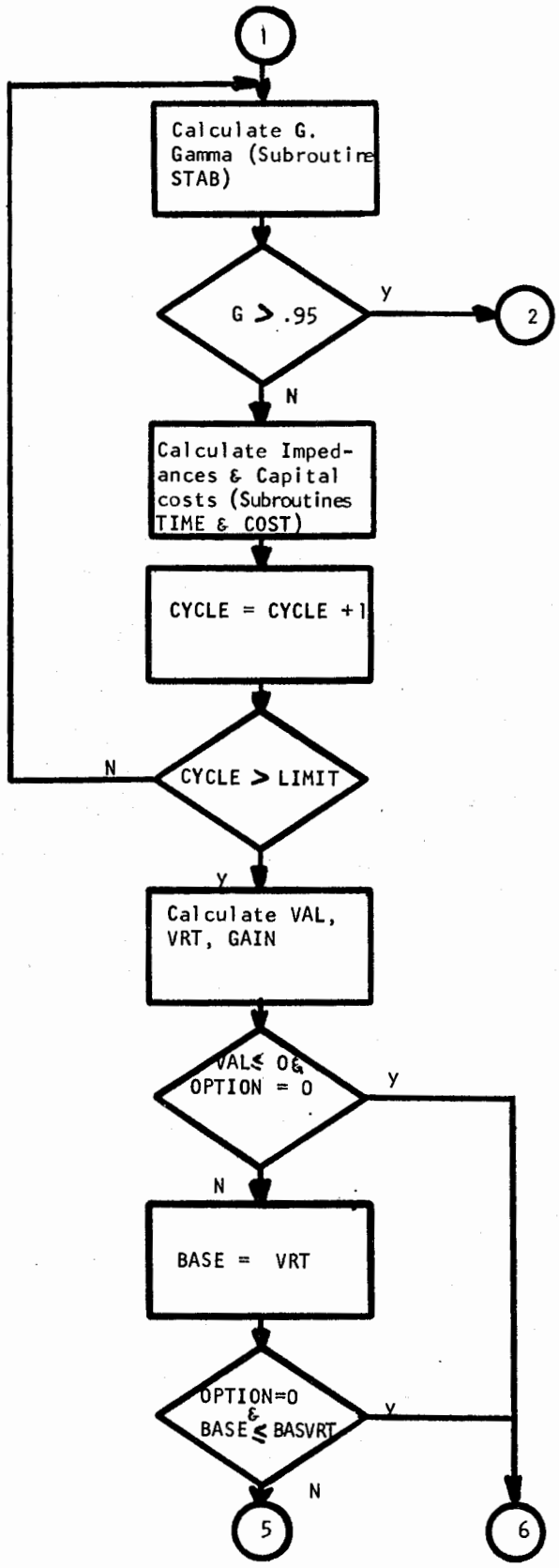

FIGURE II-1 continued

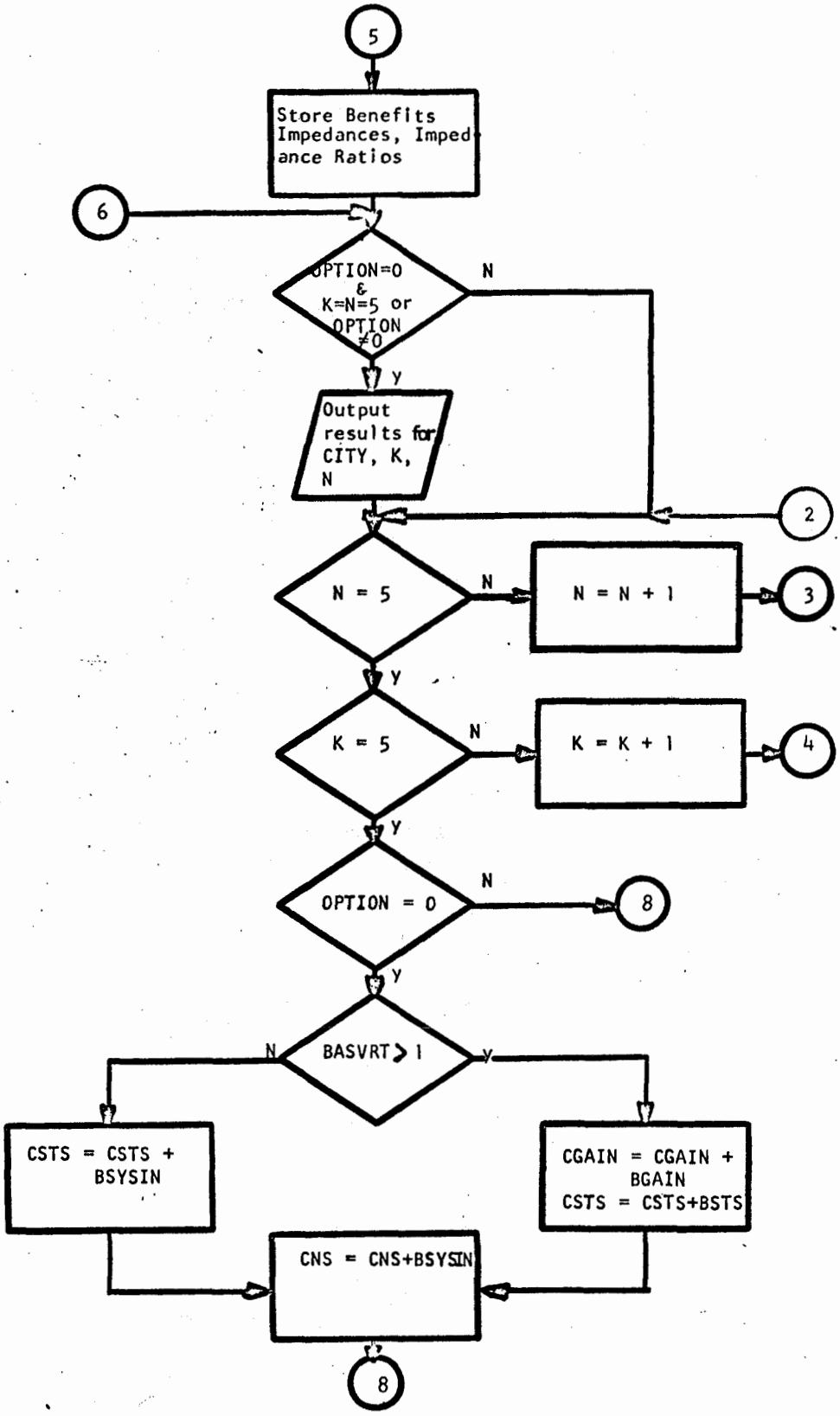

FIGURE II-1 continued

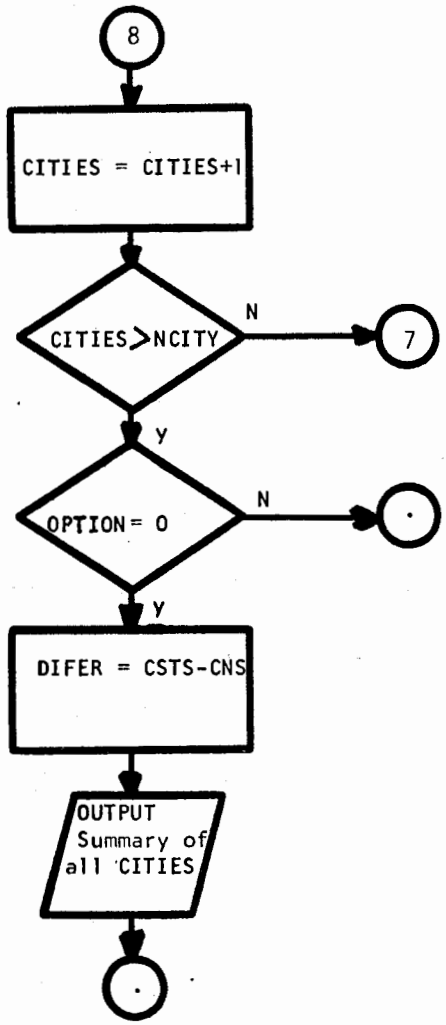

FIGURE II-1 continued

computed. This involves calculating values of VAL, GAIN, and VRT or user net benefit, total net benefits to all users, and the relative benefit to cost ratio, respectively.

If OPTION = 0 (i.e. the program user desires only the "best" STS system for each city) the program stores all the information required for printout in a set of dummy variables each time a better solution is obtained.

If OPTION ≠ 0 the program outputs all of the results computed for that design.

This process is repeated for all values of N, number of satellite terminals, and K, STS technology type, specified by the program user. (The DO 200 "doLoop" in the program).

After completing the specified iterations for K and N the program repeats the process for the next city for which data has been supplied.

When all cities have been examined the program terminates. In the OPTION = 0 case, a summary of program net benefits and costs is computed and printed.

III. FASTSEM COMPUTER CARD DECK

The make-up of the basic FASTSEM program job deck is shown on Figure III-1. It consists of job control cards (for the computing facility being used), the main program deck, the STAB, TIME, and COST subroutine decks respectively, another control card, the data deck and a job end card.

A listing of the main deck and the subroutine decks is presented in Appendix B.

The FASTSEM data deck consists of eight groups of cards as shown on Figure III-2. The parameter names and card formats for all of the data cards are shown on Figure III-3, and a data listing is shown on Figure III-4. The data groups include

1) Technological parameters for general airport characteristics, use patterns, costs, STS technologies, etc. These parameters are coded in 8F10.5 format, i.e. 8 fields of 10 columns per card in floating point format.

2) Option Card

   OPTION = 0 for best STS design for each city.

   OPTION ≠ 0 for output for all K, N, each city.

   Coded F10.5, in first 10 columns of the card.

3) K, N - Number STS technologies, and maximum number of satellite terminals in a STS. Coded 2I3, i.e. two fields of 3 integer columns apiece.

4) LIMIT, NCITY - Number of cycles in demand convergence loop and number of cities. Format 2I3,

5) STS Vehicle Average Passenger Loads (persons/vehicle). Five fields of 10 columns each, floating point format, 5F10.5.

The Basic FASTSEM Program

Computer Card Deck

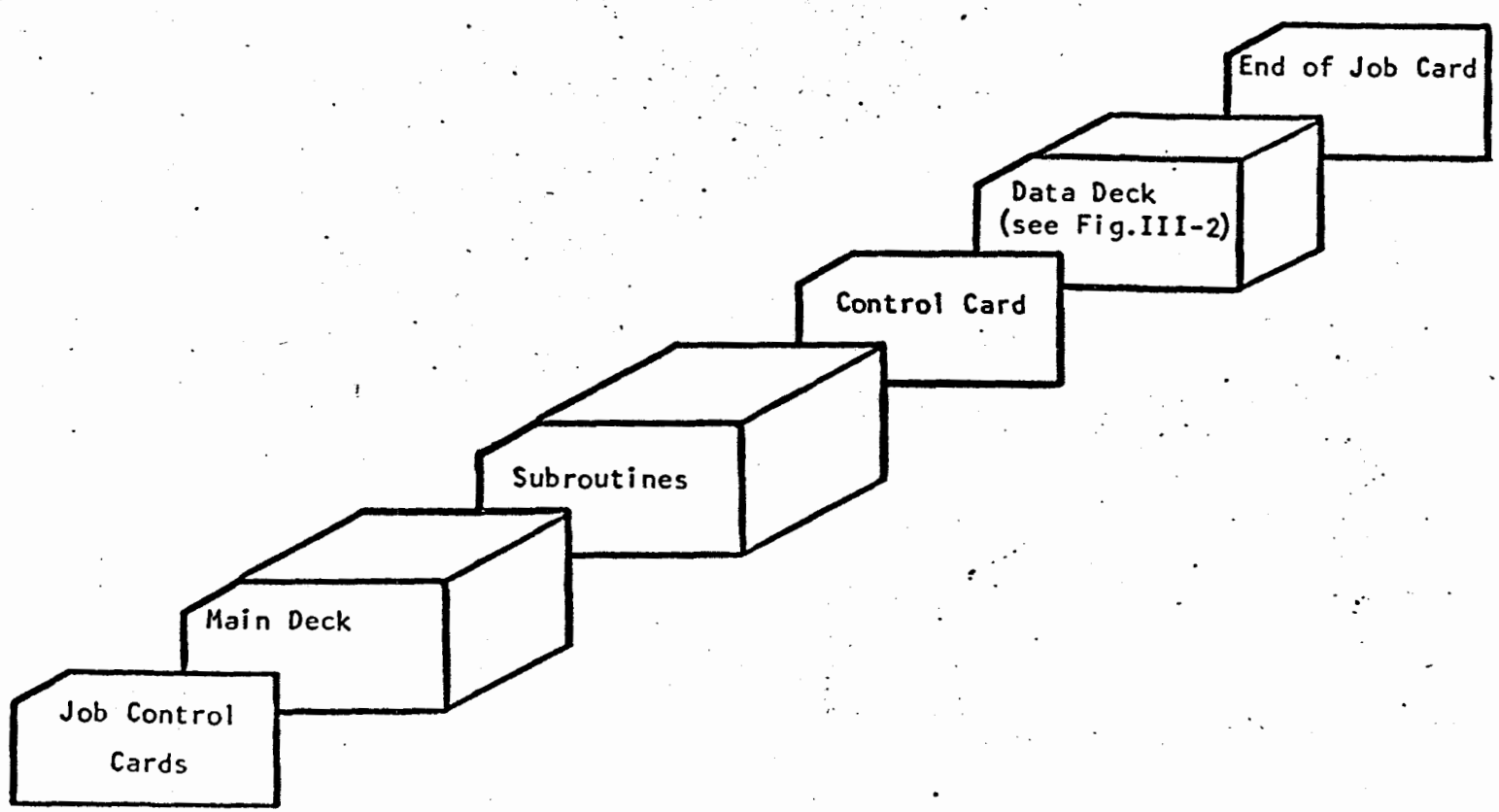

FIGURE III-1

Basic FASTSEM Program

Data Deck

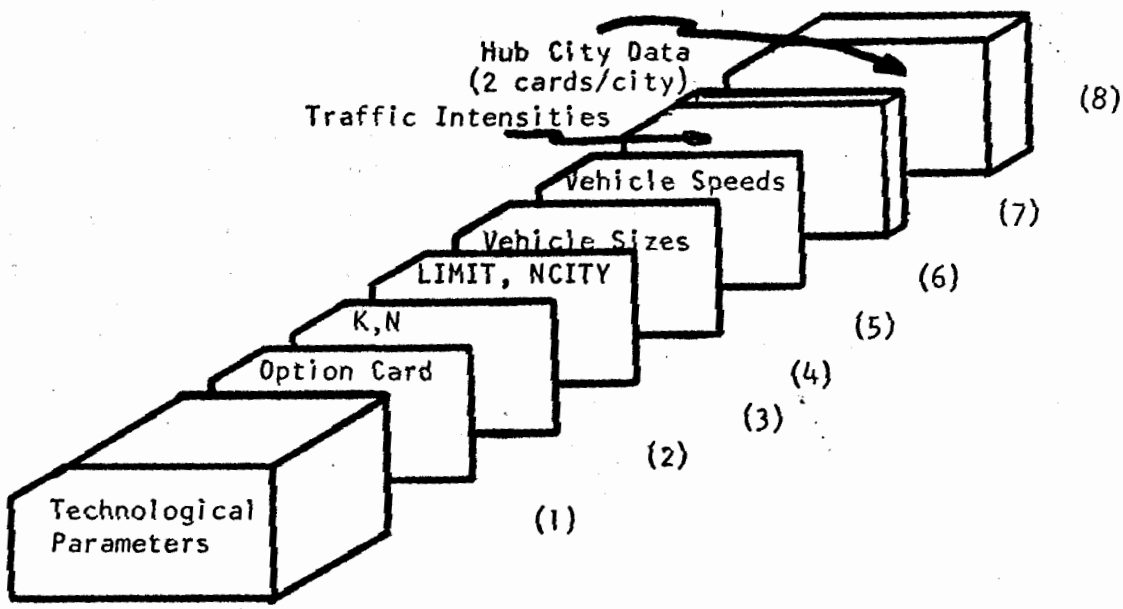

FIGURE III - 2

FASTSEM PROGRAM DATA DECK PARAMETERS.

Data Card Group	DATA CARD Number	Card Columns 1-10	11-20	21-30	31-40	41-50	51-60	61-70	71-80
1	1	ALAMDA	ALC	ALT	ALPHBE	UPA	UPS	UA	US
	2	T1A	T2A	T3A	T4A	T1S	T2S	T3S	T4S
	3	RHO	RHOS	ECA	ECS	EAC	A	CA	CAR
	4	CB	CG	CKSI	CL	CL1MO	CLS	CO	CPA
	5	CPK	CPS	CRF	CSA	CSS	DAC	DMAX	DR
	6	DPMA	DPMS	DRS	DSS	DWA	DWS	DBAR	ML
	7	QV	QAA	RP	RB	XA	XS	TB	TC
	8	TCS	TDUR	TKTI	VA	VAC	VD	ALPHA1	ALPHA 2
	9	ALPHA3	ALPHA4	ALPHA5	ALPHA6	ALPHA7	ALPHA8	ALPHA9	B1
	10	B2	B3	B4	B5	B6	B7	B8	B9
	11	TP							
	12	AC	AS	CAA	CC	CLA	CLM	CLSS	CR
	13	CV1	CV2	CV3	CV4	Cv5	CW3	CW4	CW5
	14	EB	Q2A	Q3A	Q4A	Q2S	Q3S	Q4S	TCA
	15	TCS	TL1	TSC	TL3	TL4	TL5	TPZ	
	16	LA	LS	NL	N1				
2	17*	OPTION							

		Card Columns 1-3	4-6
3	18+	K	N
4	19	LIMIT	NCITY

		Card Columns 1-10	11-20	21-30	31-40	41-50
5	20	QSV(1)	QSV(2)	QSV(3)	QSV(4)	QSV(5)
6	21	VS(1)	VS(2)	VS(3)	VS(4)	VS(5)
7	22	ZEP(1)	ZIP(1)	ZOP(1)	ZUP(1)	ZAT

* Delete this card for the sensitivity program

\+ Delete this card for the basic FASTSEM program

FIGURE III-3

Data Card Group	Data Card Number	Card Columns (continued) 1-10	11-20	21-30	31-40	41-50
	23	ZEB	ZEC	ZEF(1)	ZEG	
	24	ZEP(2)	ZIP(2)	ZOP(2)	ZUP(2)	ZAT
	25	ZEB	ZEC	ZEF(2)	ZEG	
	26	ZEP(3)	ZIP(3)	ZOP(3)	ZUP(3)	ZAT
	27	ZEB	ZEC	ZEF(3)	ZEG	
	28	ZEP(4)	ZIP(4)	ZOP(4)	ZUP(4)	ZAT
	29	ZEB	ZEC	ZEF(4)	ZEG	
	30	ZEP(5)	ZIP(5)	ZOP(5)	ZUP(5)	ZAT
	31	ZEB	ZEC	ZEF(5)	ZEG	
		Card Columns 1-20	21-31	32-41	42-50	51-60
8	32	HUB(J)	TPHP70	TPHP90	SMSA	ESTL70
		Card Columns 1-4	5-11	12-15	16-19	20-23
	33	NGAT7	AEP7	IP7	IP8	ICBD

(Repeat cards 32 and 33 for each city.)

FIGURE III-3 continued

```
1.5        -2.33      -1.23      .5         .6667      .6667      1080.      360.
.6         .2         .1         .1         .6         .2         .1         .1
3.         3.         8.         4.         2.         .68        4500.      .1
10.        12.        3.         2.         .15        12.        5.         3600.
.3         800.       .16275     50.        10.        1.25       700.       500.
500.       300.       300.       200.       400.       200.       300.       10.
300.       6834.      15.        10.        1000.      600.       10.        2.
5.         4.         1.         30.        15.        30.        3.         3.
3.         3.         3.         3.         3.         3.         3.         .4
.4         .4         .4         .4         .4         .4         .4         .4
8.
350.       350.       15.        30.        4.12       .5         10.        .07265
8000.      24000.     32500.     250000.    350000.    500000.    2000000.   7000000.
1.5        20.        1.2        1.8        20.        1.2        1.8        20.
20.        .0833      .0833      .0833      .0833      .0833      16.
         2          4        250          2
         1
  5  2
10.        30.        50.        20.        80.
30.        30.        40.        80.        100.
   1.38067    3.45166    0.41420    1.15055    1.55333
   0.62133    0.77667    1.15055    1.55333
   1.38067    3.45166    0.41420    1.15055    1.55333
   0.62133    0.77667    1.15055    1.55333
   1.38067    3.45166    0.41420    1.15055    1.55333
   0.62133    0.77667    1.15055    1.55333
   0.75933    1.89833    0.22780    0.94917    1.55333
   0.62133    0.77667    0.94917    1.55333
   0.75933    1.89833    0.22780    0.94917    1.55333
   0.62133    0.77667    0.94917    1.55333
NEW YORK/NEWARK            8460.     44415.     3930.       9.
 200 21.115 213 372  11
PHILADELPHIA               1535.     8283.     3553.       2.0
  28  3.068  37  70   9
```

Basic FASTSEM Data Deck Listing

FIGURE III-4

6) STS Vehicle Trip Speeds mph, coded 5F10.5.

7) Traffic Intensities for the time delay factors in the TIME subroutine. Coded 5F10.5. These cards may be obtained using Traffic Intensity Program in Appendix C.

8) Hub city Data. 2 cards per hub city (see Figure III-4).

The name of the city is punched in the first 20 columns of the first card using the alphameric format, so that all characters are valid. The number of peak hourly airport passengers in 1970 is punched in columns 21-31; the number of peak hourly passengers expected in 1990 is punched in columns 32 through 41. The size of the Standard Metropolitan Statistical Area (sq. miles) and the number of airport highway access lanes in 1970 are punched beginning in columns 42 and 51. All data on this card, except the city name, are punched in floating point format.

The second city card contains the values of NGAT 7, AEP7, IP7, IP8, and ICBD beginning in columns 1, 5, 12, 16, and 20, respectively. AEP7 is specified in floating point form; all others are integers and so are right justified without a decimal point.

IV FASTSEM PROGRAM OUTPUT

The basic FASTSEM program provides printed output as illustrated in Figures IV-1 A and B. The first page of the output (Figure IV-1A) is a listing of all general input variables and their values. All successive pages follow the format of Figure IV-1B.

At the top of each page is a listing of the data read in for a particular city. Next, a summary of time impedances and impedance ratios is printed. Included are time impedances without a satellite terminal system, with a STS, each component of the impedance with STS, and time impedance ratios for either direct access or travel via the satellite.

The third block on the output page contains a summary of the information from subroutine COST. This includes cost impedances and impedance ratios. The capital costs of facilities expansion are listed by component for the no satellite case and for each of the five satellite terminal system technologies.

The final block contains summary information including the STS technology number being examined, the number of STS terminals in the system, and the fraction of airport access traffic going directly to the airport. Next, the time impedances direct and via STS type K are listed. Finally, cost and cost benefit information is written. The "additional cost for STS" is the capital cost for the total system with STS less the total system cost without STS.

THIS IS A HYPOTHETICAL EXAMPLE FOR MODEL TESTING ONLY

DATA

ALC	ALPHA1	ALPHA2	ALPHA3	ALPHA4	ALPHA5	ALPHA6	ALPHA7	ALPHA8	ALPHA9
-2.3300	3.0000	3.0000	3.0000	3.0000	3.0000	3.0000	3.0000	3.0000	3.0000
ALT	B1	B2	B3	B4	B5	B6	B7	B8	B9
-1.2300	0.4000	0.4000	0.4000	0.4000	0.4000	0.4000	0.4000	0.4000	0.4000
ALPHBE	BB			BAC	RHO	RHOS	UPA	UPS	UA
0.5000	1.5000			2.0000	3.0000	3.0000	0.6667	0.6667	1080.0000
US	T1A	T2A	T3A	T4A	T1S	T2S	T3S	T4S	CRF
360.0000	0.6000	0.2000	0.1000	0.1000	0.6000	0.2000	0.1000	0.1000	0.1627
A	AC	CA	CAR	CB	CC	CG	CKSI	CL	CLA
0.6800	350.0000	4500.0000	0.1000	10.0000	30.0000	12.0000	3.0000	2.0000	4.1200
CLIMO	CLM	CLS	CLSS			CR			CV1
0.1500	0.5000	12.0000	10.0000			0.0726			8000.0000
CV2	CV3	CV4	CV5	CW3	CW4	CW5	DAC	DMAX	DPMS
24000.0000	32500.0000	250000.0000	350000.0000	500000.0000	2000000.0000	7000000.0000	1.2500	700.0000	300.0000
DRS	DSS	DWA	DWS	DBAR	ML	QV		RB	RP
300.0000	200.0000	400.0000	200.0000	300.0000	10.0000	300.0000		10.0000	15.0000
TB	TC	TCA	TCS	TDUR	TKTI	TL1	TL2	TL3	TL4
10.0000	2.0000	20.0000	20.0000	4.0000	1.0000	0.0833	0.0833	0.0833	0.0833
TL5	TP	TPZ	VA	VAC	VD	XA	XS		
0.0833	8.0000	16.0000	30.0000	15.0000	30.0000	1000.0000	600.0000		
OPTION	LA	LIMIT	LS	NCITY	ND	NL			
1	2	5	4	2	250	2			
QSV(1)	QSV(2)	QSV(3)	QSV(4)	QSV(5)	VS(1)	VS(2)	VS(3)	VS(4)	VS(5)
10.0000	30.0000	50.0000	20.0000	80.0000	30.0000	30.0000	40.0000	80.0000	100.0000

K	ZEP(K)	ZIP(K)	ZOP(K)	ZUP(K)	ZAT(K)	ZEB	ZEC	ZEF(K)	ZEG
1	1.3807	3.4517	0.4142	1.1505	1.5533	0.6213	0.7767	1.1505	1.5533
2	1.3807	3.4517	0.4142	1.1505	1.5533	0.6213	0.7767	1.1505	1.5533
3	1.3807	3.4517	0.4142	1.1505	1.5533	0.6213	0.7767	1.1505	1.5533
4	0.7593	1.8983	0.2278	0.9492	1.5533	0.6213	0.7767	0.9492	1.5533
5	0.7593	1.8983	0.2278	0.9492	1.5533	0.6213	0.7767	0.9492	1.5533

END OF DATA

Typical FASTSEM Output Page

FIGURE IV-1A

****

NEW YORK/NEWARK PEAK HOURLY PASSENGERS -- 1970=8460.00 1990=44415.0 AIRPORT ACCESS TRIPS=66622.50
SERVICE AREA=1965.00 CBD TO AIRPORT DISTANCE=16.50 ACCESS HIGHWAY LANES, 1970=9.0

**********TIME IMPEDANCE SUMMARY**********

TIME IMPEDANCE WITHOUT STS = 98.3560

TIME IMPEDANCE COMPONENTS

	DIRECT		VIA STS	
	TO	FROM	TO	FROM
	29.7953	3.7500	14.9733	3.7500
	37.0878	3.6111	4.5988	3.6111
	7.1627	2.3800	0.0	2.3800
	2.3800	0.5712	82.5471	87.7068
	5.5915	7.7627	5.5915	1.5122
	9.4693	37.0878	15.0000	5.5209
	0.0500	29.7953	0.0500	14.9733
	12.5833		12.5833	
	---	---	---	---
IMPEDANCES	104.1199	84.9581	135.3439	119.4543

TIME IMPEDANCE RATIOS DIRECT: 1.0404 VIA STS: 0.7720

**********COST IMPEDANCE SUMMARY**********

COST IMPEDANCE WITHOUT STS = 3.1527

CAPITAL COST COMPONENTS

COMPONENT	NO STS	STS1	STS2	STS3	STS4	STS5
ACCESS HIGHWAY	219.7716	160.3700	154.3700	151.3701	151.3701	151.3701
CIRCULATION ROADWAY	71.7512	51.5604	51.5604	51.1622	50.7534	50.3965
AIRPORT PARKING LOT	164.6017	131.4138	131.4138	131.4138	131.4138	131.4138
AIRPORT CURB SPACES	14.0524	5.8929	5.7040	5.6662	5.6095	5.6095
AIRPORT TERMINAL	183.6650	183.6650	183.6650	168.5579	154.3805	146.6335
TOTAL DOMESTIC TERMINAL	653.8413	532.9016	526.7126	508.1699	493.5269	485.4231
TOTAL INTERNATIONAL TERMINAL	737.9895	617.0498	610.8608	592.3181	560.7085	552.6047
COST PER STS TERMINAL	0.0	10.9176	48.2745	77.3005	187.6544	229.4152
TOTAL DOMESTIC SYSTEM	653.8413	543.8191	574.9871	585.4702	681.1812	714.8381
TOTAL INTERNATIONAL SYSTEM	737.9895	627.9673	659.1353	669.6184	748.3628	782.0198

COST IMPEDANCE WITH STS: DIRECT= 2.9050 VIA STS= 3.8385
COST IMPEDANCE RATIOS: DIRECT= 1.0853 VIA STS= 0.8213

****

K=1. N=1. G=0.30 DIRECT ACCESS TIME= 94.54 SATELLITE ACCESS TIME=127.40 BENEFIT TO COST RATIO= 1.3

CAPITAL COST, NO STS= 737.9895 ADDITIONAL COST FOR STS= -110.02 USER COST DIFFERENTIAL= -0.17

****

Typical FASTSEM Output Page

FIGURE IV-1B

Units used in the output page are as follows:

Area	square miles
Distances	miles
Time impedances	minutes
Cost impedances	dollars
User costs	dollars
Capital costs	dollars x 10^6

All ratios are dimensionless.

Variable names have been added to the sample output page of Figure IV-2 to assist in the identification of the output.

(HUB(J)) Peak Hourly Passengers -- 1970 = (TPHP70) 1990 = (TPHP90) Airport Access Trips = (QQ)
Service Area = (SMSA) CBD to Airport Distance = (DS) Access Highway Lanes, 1970 = (ESTL70)

**********TIME IMPEDANCE SUMMARY**********

TIME IMPEDANCE WITHOUT STS = (TNN)

Time Impedance Components

	Direct To	Direct From	Via STS To	Via STS From
	(TA1)	(TA21)	(TS1)	(TS21)
	(TA2(K))	(TA22)	(TS2)	(TS22(K))
	(TA3(K))	(TA23)	(TS3(K))	(TS23(K))
	(TA4)	(TA24)	(TS4(K))	(TS24(K))
	(TA5(K))	(TA25)	(TS5(K))	(TS25)
	(TA6)	(TA26(K))	(TS6(K))	(TS26)
	(TA7)	(TA27)	(TS7)	(TS27)
	(TAB)		(TS8(K))	
	---	---	---	---
Impedances	(TAONE(K))	(TATWO(K))	(TSONE(K)	(TSTWO(K)

Time Impedance Ratios Direct: (TAIR(K)) Via STS: (TKT(K))

**********COST IMPEDANCE SUMMARY**********

COST IMPEDANCE WITHOUT STS = (DNS)

Capital Cost Components

Component	No STS	STS1	STS2	STS3	STS4	STS5
Access Highway	(AHN)	(AH1)	(AH2)	(AH3)	(AH4)	(AH5)
Circulation Roadway	(CRN)	(CR1)	(CR2)	(CR3)	(CR4)	(CR5)
Airport Parking Lot	(APN)	(AP1)	(AP2)	(AP3)	(AP4)	(AP5)
Airport Curb Spaces	(ACN)	(AC1)	(AC2)	(AC3)	(AC4)	(AC5)
Airport Terminal	(ATN)	(AT1)	(AT2)	(AT3)	(AT4)	(AT5)
Total Domestic Terminal	(TTLDN)	(TTLD1)	(TTLD2)	(TTLD3)	(TTLD4)	(TTLD5)
Total International Terminal	(TTLIN)	(TTLI1)	(TTLI2)	(TTLI3)	(TTLI4)	(TTLI5)
Cost per STS Terminal	(SATN)	(SAT1)	(SAT2)	(SAT3)	(SAT4)	(SAT5)
Total Domestic System	(CSYSDN)	(CSYSD1)	(CSYSD2)	(CSYSD3)	(CSYSD4)	(CSYSD5)
Total International System	(CSYSIN)	(CSYSI1)	(CSYSI2)	(CSYSI3)	(CSYSI4)	(CSYSI5)

Cost Impedance with STS: Direct = (DIC(K)) Via STS = (SIC(K))
Cost Impedance Ratios: Direct = (CKD(K)) Via STS = (CKS(K))

****

K = (K) N = (N) G = (G) Direct Access Time = (AIT(K)) Satellite Access Time = (SIT(K)) Benefit to Cost Ratio = (VRT(K))

Capital Cost, No STS = (CSYSIN) Additional Cost for STS = (CDIF(K)) User Cost Differential = (VAL(K))

****

Program Output Variable Names
Figure IV-2

V. SAMPLE PROGRAM RUNS

SAMPLE RUN 1

This run illustrates program operation with OPTION = 0 The program examines each combination of STS technology and number of satellite terminals for each city and provides results for that combination with the highest benefit to capital cost ratio. At the end, a summary page is printed.

Data used for this run is listed in Figure V-1. For the sake of brevity, only two cities have been considered. Program output is listed in Figure V-2.

SAMPLE RUN 2

With OPTION not equal to zero, the program prints output for all values of K and N from 1 through 5 for each city. No summary of all cities is prepared.

Figure V-3 lists the data used in this run. Note that the data deck is identical to the data of Sample Run 1, except OPTION = 1 and only one set of city data is included.

The output is listed in Figure V-4. Note the largest benefit-cost ratio occurred with K = 5 and N = 1 , the case chosen automatically by the program in Sample Run 1.

```
1.5        -2.33      -1.23      .5         .6667      .6667      1080.      360.
.6         .2         .1         .1         .6         .2         .1         .1
3.         3.         8.         4.         2.         .68        4500.      .1
10.        12.        3.         2.         .15        12.        5.         3600.
.3         800.       .16275     50.        10.        1.25       700.       500.
500.       300.       300.       200.       400.       200.       300.       10.
300.       6834.      15.        10.        1000.      600.       10.        2.
5.         4.         1.         30.        15.        30.        3.         3.
3.         3.         3.         3.         3.         3.         3.         .4
.4         .4         .4         .4         .4         .4         .4         .4
8.
350.       350.       15.        30.        4.12       .5         10.        .07265
8000.      24000.     32500.     250000.    350000.    500000.    2000000.   7000000.
1.5        20.        1.2        1.8        20.        1.2        1.8        20.
20.        .0833      .0833      .0833      .0833      .0833      16.
         2          4        250          2
         0
  5  2
10.        30.        50.        20.        80.
30.        30.        40.        80.        100.
   1.38067    3.45166    0.41420    1.15055    1.55333
   0.62133    0.77667    1.15055    1.55333
   1.38067    3.45166    0.41420    1.15055    1.55333
   0.62133    0.77667    1.15055    1.55333
   1.38067    3.45166    0.41420    1.15055    1.55333
   0.62133    0.77667    1.15055    1.55333
   0.75933    1.89833    0.22780    0.94917    1.55333
   0.62133    0.77667    0.94917    1.55333
   0.75933    1.89833    0.22780    0.94917    1.55333
   0.62133    0.77667    0.94917    1.55333
NEW YORK/NEWARK            8460.     44415.     3930.          9.
 200 21.115 213 372  11
PHILADELPHIA               1535.     8283.     3553.          2.0
  28  3.068  37  70   9
```

Sample Run 1 Data Deck Listing

FIGURE V-1

****

NEW YORK/NEWARK PEAK HOURLY PASSENGERS -- 1970=8460.00 1990=44415.0 AIRPORT ACCESS TRIPS=66622.50
SERVICE AREA=1965.00 CBD TO AIRPORT DISTANCE=16.50 ACCESS HIGHWAY LANES, 1970=9.0

**********TIME IMPEDANCE SUMMARY**********

TIME IMPEDANCE WITHOUT STS = 98.3560

TIME IMPEDANCE COMPONENTS

	DIRECT		VIA STS	
	TO	FROM	TO	FROM
	26.2992	3.7500	20.5016	3.7500
	23.0428	3.6111	4.5988	0.0
	5.6627	2.3800	2.4436	0.0
	2.3800	0.5712	24.6419	27.1857
	3.6836	6.2627	0.0	2.8350
	8.9449	23.0428	3.0000	5.5209
	0.0500	26.2992	0.0500	20.5016
	12.5833		2.0000	
	---	---	---	---
IMPEDANCES	82.6464	65.9169	57.2358	59.7931

TIME IMPEDANCE RATIOS DIRECT: 1.3241 VIA STS: 1.6809

**********COST IMPEDANCE SUMMARY**********

COST IMPEDANCE WITHOUT STS = 3.1527

CAPITAL COST COMPONENTS

COMPONENT	NO STS	STS1	STS2	STS3	STS4	STS5
ACCESS HIGHWAY	219.7716	113.7570	103.8285	98.8643	98.8643	98.8643
CIRCULATION ROADWAY	71.7512	36.4148	36.4148	35.7700	35.1010	34.2972
AIRPORT PARKING LOT	164.6017	102.3832	102.3832	102.3832	102.3832	102.3832
AIRPORT CURB SPACES	14.0524	4.9015	4.5474	4.4766	4.3703	4.3703
AIRPORT TERMINAL	183.6650	183.6650	183.6650	155.3432	128.7643	114.2407
TOTAL DOMESTIC TERMINAL	653.8413	441.1211	430.8386	396.8372	369.4829	354.1555
TOTAL INTERNATIONAL TERMINAL	737.9895	525.2693	514.9868	480.9854	421.8235	406.4961
COST PER STS TERMINAL	0.0	20.4677	90.4831	137.6023	326.0364	332.2139
TOTAL DOMESTIC SYSTEM	653.8413	461.5886	521.3215	534.4395	695.5193	686.3694
TOTAL INTERNATIONAL SYSTEM	737.9895	545.7368	605.4697	618.5876	747.8599	738.7100

COST IMPEDANCE WITH STS: DIRECT= 2.7010 VIA STS= 3.0118
COST IMPEDANCE RATIOS: DIRECT= 1.1672 VIA STS= 1.0468

****

K=5. N=1. G=0.62 DIRECT ACCESS TIME= 74.28 SATELLITE ACCESS TIME= 58.51 BENEFIT TO COST RATIO= 3224.0

CAPITAL COST, NO STS= 737.9895 ADDITIONAL COST FOR STS= 0.72 USER COST DIFFERENTIAL= 2.84

****

Output from Sample Run 1

FIGURE V-2

****

PHILADELPHIA PEAK HOURLY PASSENGERS -- 1970=1535.00 1990= 8283.0 AIRPORT ACCESS TRIPS=12424.50
SERVICE AREA=1776.50 CBD TO AIRPORT DISTANCE=13.50 ACCESS HIGHWAY LANES, 1970=2.0

**********TIME IMPEDANCE SUMMARY**********

TIME IMPEDANCE WITHOUT STS = 66.4833

TIME IMPEDANCE COMPONENTS

	DIRECT		VIA STS	
	TO	FROM	TO	FROM
	21.9796	3.7500	11.4258	3.7500
	6.9778	3.6111	4.5988	3.6111
	7.1627	2.3800	0.0	2.3800
	2.3800	0.5712	42.4883	45.5135
	5.5915	7.7627	5.5915	0.9740
	8.2969	6.9778	9.0000	5.5209
	0.0500	21.9796	0.0500	11.4258
	12.5833		12.5833	
	---	---	---	---
IMPEDANCES	65.0217	47.0323	85.7376	73.1751

TIME IMPEDANCE RATIOS DIRECT: 1.1866 VIA STS: 0.8367

**********COST IMPEDANCE SUMMARY**********

COST IMPEDANCE WITHOUT STS = 3.0028

CAPITAL COST COMPONENTS

COMPONENT	NO STS	STS1	STS2	STS3	STS4	STS5
ACCESS HIGHWAY	38.2326	13.6632	11.5232	10.4531	10.4531	10.4531
CIRCULATION ROADWAY	5.8256	2.0737	2.0737	2.0119	1.9470	1.8742
AIRPORT PARKING LOT	30.8923	14.8455	14.8455	14.8455	14.8455	14.8455
AIRPORT CURB SPACES	2.6373	0.7707	0.6794	0.6611	0.6337	0.6337
AIRPORT TERMINAL	33.8329	33.8329	33.8329	26.5285	19.6735	16.2587
TOTAL DOMESTIC TERMINAL	111.4208	65.1861	62.9547	54.5001	47.5528	44.0652
TOTAL INTERNATIONAL TERMINAL	127.2136	80.9789	78.7475	70.2930	55.1422	51.6545
COST PER STS TERMINAL	0.0	1.1115	5.6745	14.8900	44.0351	107.6065
TOTAL DOMESTIC SYSTEM	111.4208	69.6320	85.6527	114.0600	223.6933	474.4907
TOTAL INTERNATIONAL SYSTEM	127.2136	85.4249	101.4456	129.8529	231.2827	482.0803

COST IMPEDANCE WITH STS: DIRECT= 2.3335 VIA STS= 2.4759
COST IMPEDANCE RATIOS: DIRECT= 1.2869 VIA STS= 1.2128

****

K=3. N=4. G=0.48 DIRECT ACCESS TIME= 56.03 SATELLITE ACCESS TIME= 79.46 BENEFIT TO COST RATIO= 26.2

CAPITAL COST, NO STS= 127.2136 ADDITIONAL COST FOR STS= 2.64 USER COST DIFFERENTIAL= 0.45

****

FIGURE V-2 continued

TOTAL PROGRAM SUMMARY--OFF AIRPORT TERMINALS--($-MILLIONS)

```
NUMBER OF CITIES INCLUDED  =  2.
TOTAL NET BENEFITS         =   389.27$ PER YEAR
ADDED COSTS OF STS PROGRAM =     0.55$ PER YEAR

     STS SYSTEM COSTS =   865.75$
     COST WITH NO STS =   865.20$
```

FIGURE V-2 continued

```
1.5        -2.33      -1.23      .5         .6667      .6667      1080.      360.
.6         .2         .1         .1         .6         .2         .1         .1
3.         3.         8.         4.         2.         .68        4500.      .1
10.        12.        3.         2.         .15        12.        5.         3600.
.3         800.       .16275     50.        10.        1.25       700.       500.
500.       300.       300.       200.       400.       200.       300.       10.
300.       6834.      15.        10.        1000.      600.       10.        2.
5.         4.         1.         30.        15.        30.        3.         3.
3.         3.         3.         3.         3.         3.         3.         .4
.4         .4         .4         .4         .4         .4         .4         .4
8.
350.       350.       15.        30.        4.12       .5         10.        .07265
8000.      24000.     32500.     250000.    350000.    500000.    2000000.   7000000.
1.5        20.        1.2        1.8        20.        1.2        1.8        20.
20.        .0833      .0833      .0833      .0833      .0833      16.
         2          4        250          2
         1
  5  2
10.        30.        50.        20.        80.
30.        30.        40.        80.        100.
   1.38067    3.45166    0.41420    1.15055    1.55333
   0.62133    0.77667    1.15055    1.55333
   1.38067    3.45166    0.41420    1.15055    1.55333
   0.62133    0.77667    1.15055    1.55333
   1.38067    3.45166    0.41420    1.15055    1.55333
   0.62133    0.77667    1.15055    1.55333
   0.75933    1.89833    0.22780    0.94917    1.55333
   0.62133    0.77667    0.94917    1.55333
   0.75933    1.89833    0.22780    0.94917    1.55333
   0.62133    0.77667    0.94917    1.55333
NEW YORK/NEWARK            8460.     44415.     3930.          9.
 200 21.115 213 372  11
PHILADELPHIA               1535.     8283.     3553.          2.0
  28  3.068  37  70   9
```

FIGURE V-3

Sample Run 2 Data Deck Listing

****

NEW YORK/NEWARK PEAK HOURLY PASSENGERS -- 1970=8460.00 1990=44415.0 AIRPORT ACCESS TRIPS=66622.50
SERVICE AREA=1965.00 CBD TO AIRPORT DISTANCE=16.50 ACCESS HIGHWAY LANES, 1970=9.0

**********TIME IMPEDANCE SUMMARY**********

TIME IMPEDANCE WITHOUT STS = 98.3560

TIME IMPEDANCE COMPONENTS

	DIRECT		VIA STS	
	TO	FROM	TO	FROM
	29.7953	3.7500	14.9733	3.7500
	37.0878	3.6111	4.5988	3.6111
	7.1627	2.3800	0.0	2.3800
	2.3800	0.5712	82.5471	87.7068
	5.5915	7.7627	5.5915	1.5122
	9.4693	37.0878	15.0000	5.5209
	0.0500	29.7953	0.0500	14.9733
	12.5833		12.5833	
	---	---	---	---
IMPEDANCES	104.1199	84.9581	135.3439	119.4543

TIME IMPEDANCE RATIOS DIRECT: 1.0404 VIA STS: 0.7720

**********COST IMPEDANCE SUMMARY**********

COST IMPEDANCE WITHOUT STS = 3.1527

CAPITAL COST COMPONENTS

COMPONENT	NO STS	STS1	STS2	STS3	STS4	STS5
ACCESS HIGHWAY	219.7716	160.3700	154.3700	151.3701	151.3701	151.3701
CIRCULATION ROADWAY	71.7512	51.5604	51.5604	51.1622	50.7534	50.3965
AIRPORT PARKING LOT	164.6017	131.4138	131.4138	131.4138	131.4138	131.4138
AIRPORT CURB SPACES	14.0524	5.8929	5.7040	5.6662	5.6095	5.6095
AIRPORT TERMINAL	183.6650	183.6650	183.6650	168.5579	154.3805	146.6335
TOTAL DOMESTIC TERMINAL	653.8413	532.9016	526.7126	508.1699	493.5269	485.4231
TOTAL INTERNATIONAL TERMINAL	737.9895	617.0498	610.8608	592.3181	560.7085	552.6047
COST PER STS TERMINAL	0.0	10.9176	48.2745	77.3005	187.6544	229.4152
TOTAL DOMESTIC SYSTEM	653.8413	543.8191	574.9871	585.4702	681.1812	714.8381
TOTAL INTERNATIONAL SYSTEM	737.9895	627.9673	659.1353	669.6184	748.3628	782.0198

COST IMPEDANCE WITH STS: DIRECT= 2.9050 VIA STS= 3.8385
COST IMPEDANCE RATIOS: DIRECT= 1.0853 VIA STS= 0.8213

****

K=1. N=1. G=0.80 DIRECT ACCESS TIME= 94.54 SATELLITE ACCESS TIME=127.40 BENEFIT TO COST RATIO= 1.3

CAPITAL COST, NO STS= 737.9895 ADDITIONAL COST FOR STS= -110.02 USER COST DIFFERENTIAL= -0.17

****

Output from Sample Run 2

FIGURE V-4

****

NEW YORK/NEWARK PEAK HOURLY PASSENGERS -- 1970=8460.00 1990=44415.0 AIRPORT ACCESS TRIPS=66622.50
SERVICE AREA=1965.00 CBD TO AIRPORT DISTANCE=16.50 ACCESS HIGHWAY LANES, 1970=9.0

**********TIME IMPEDANCE SUMMARY**********

TIME IMPEDANCE WITHOUT STS = 98.3560

TIME IMPEDANCE COMPONENTS

	DIRECT		VIA STS	
	TO	FROM	TO	FROM
	26.2992	3.7500	20.5016	3.7500
	23.0428	3.6111	4.5988	0.0
	5.6627	2.3800	2.4436	0.0
	2.3800	0.5712	24.6419	27.1857
	3.6836	6.2627	0.0	2.8350
	8.9449	23.0428	3.0000	5.5209
	0.0500	26.2992	0.0500	20.5016
	12.5833		2.0000	
	---	---	---	---
IMPEDANCES	32.6464	65.9169	57.2358	59.7931

TIME IMPEDANCE RATIOS DIRECT: 1.3241 VIA STS: 1.6809

**********COST IMPEDANCE SUMMARY**********

COST IMPEDANCE WITHOUT STS = 3.1527

CAPITAL COST COMPONENTS

COMPONENT	NO STS	STS1	STS2	STS3	STS4	STS5
ACCESS HIGHWAY	219.7716	113.7570	103.8285	98.8643	98.8643	98.8643
CIRCULATION ROADWAY	71.7512	36.4148	36.4148	35.7700	35.1010	34.2972
AIRPORT PARKING LOT	164.6017	102.3832	102.3832	102.3832	102.3832	102.3832
AIRPORT CURB SPACES	14.0524	4.9015	4.5474	4.4766	4.3703	4.3703
AIRPORT TERMINAL	183.6650	183.6650	183.6650	155.3432	128.7643	114.2407
TOTAL DOMESTIC TERMINAL	653.8413	441.1211	430.8386	396.8372	369.4829	354.1555
TOTAL INTERNATIONAL TERMINAL	737.9895	525.2693	514.9868	480.9854	421.8235	406.4961
COST PER STS TERMINAL	0.0	20.4677	90.4831	137.6023	326.0364	332.2139
TOTAL DOMESTIC SYSTEM	653.8413	461.5886	521.3215	534.4395	695.5193	686.3694
TOTAL INTERNATIONAL SYSTEM	737.9895	545.7368	605.4697	618.5876	747.8599	738.7100

COST IMPEDANCE WITH STS: DIRECT= 2.7010 VIA STS= 3.0118
COST IMPEDANCE RATIOS: DIRECT= 1.1672 VIA STS= 1.0468

****

K=5. N=1. G=0.62 DIRECT ACCESS TIME= 74.28 SATELLITE ACCESS TIME= 58.51 BENEFIT TO COST RATIO= 3224.0

CAPITAL COST, NO STS= 737.9895 ADDITIONAL COST FOR STS= 0.72 USER COST DIFFERENTIAL= 2.84

****

FIGURE V-4 continued

Part Two - The FASTSEM Sensitivity Analysis Program

VI. PROGRAM ORGANIZATION

The sensitivity deck is quite similar to the main FASTSEM program. Significant differences include:

- Temporary storage variables are no longer required because results are written by the subroutines.
- Only one set of city data is read.
- An extra loop is inserted to vary the parameter under study.
- Only one value of K and N is used.

The flow chart of Figure VI-1 will aid in understanding the operation of the program.

First the input data described in Section VII is read. This specifies all information for program execution. After initializing variables, the inserted DO LOOP varies the parameter to be analyzed over the desired range. Note the convergence of demand loop is still used to provide values of impedances, impedance ratios, and expansion costs. These are written by the individual subroutines when CYCLE = LIMIT. Note that no summary values and no user options are provided. The program terminates upon completion of the writing of output for the last value of the sensitivity parameter.

Sensitivity

Flow Chart

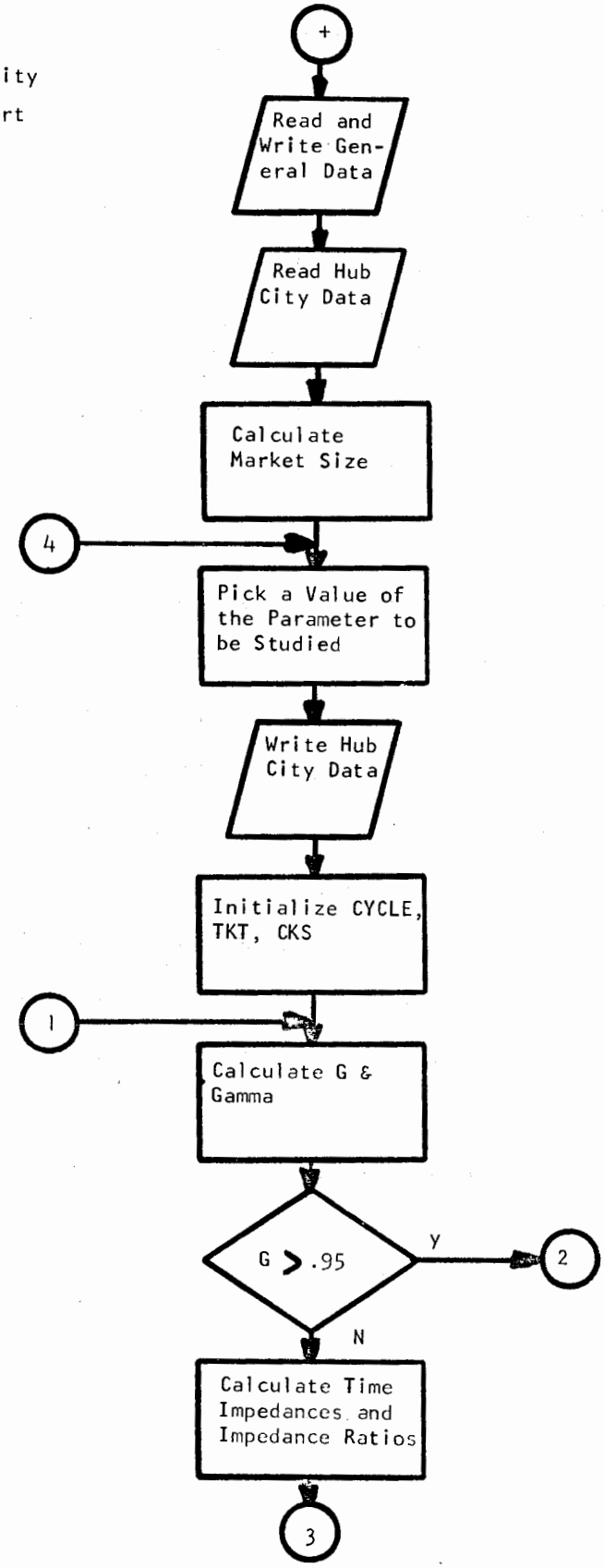

FIGURE VI-1

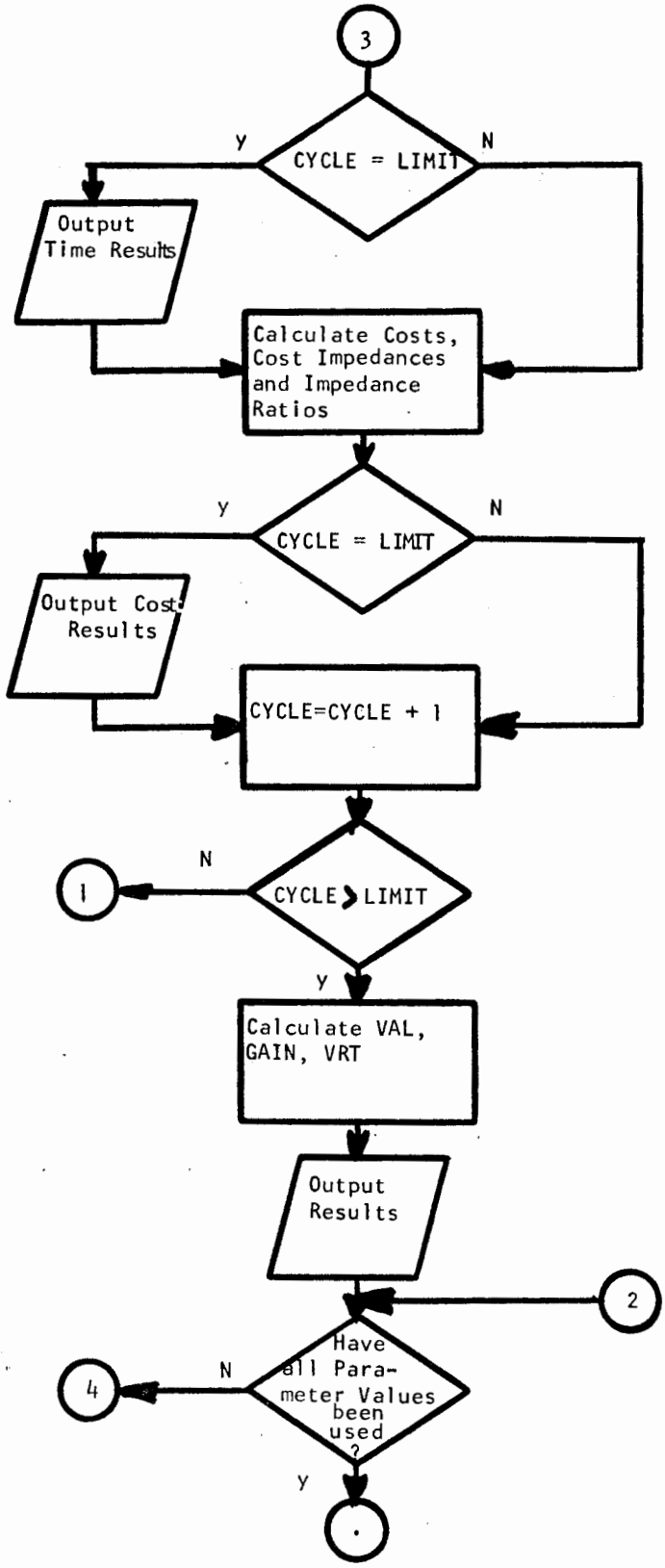

FIGURE VI-1, continued

VII DATA DECK

The data required by the sensitivity program is identical to that used in the general program (Section III, above) with the following exceptions:

1. variables OPTION and NCITY are eliminated.
2. variables K and N must be specified in input.
3. only one set of city data is required.

A program data deck is shown in Figures III-2 and III-3 and listed on VII-1. This is the data used in the sample problem of Section IX. Note that all formats are identical to those of the general program.

```
1.5        -2.33      -1.23      .5         .6667      .6667      1080.      360.
.6         .2         .1         .1         .6         .2         .1         .1
3.         3.         8.         4.         2.         .68        4500.      .1
10.        12.        3.         2.         .15        12.        5.         3600.
.3         800.       .16275     50.        10.        1.25       700.       500.
500.       300.       300.       200.       400.       200.       300.       10.
300.       6834.      15.        10.        1000.      600.       10.        2.
5.         4.         1.         30.        15.        30.        3.         3.
3.         3.         3.         3.         3.         3.         3.         .4
.4         .4         .4         .4         .4         .4         .4         .4
8.
350.       350.       15.        30.        4.12       .5         10.        .07265
8000.      24000.     32500.     250000.    350000.    500000.    2000000.   7000000.
1.5        20.        1.2        1.8        20.        1.2        1.8        20.
20.        .0833      .0833      .0833      .0833      .0833      16.
          2          4        250          2
  4  1
  5
10.        30.        50.        20.        80.
30.        30.        40.        80.        100.
   1.38067    3.45166    0.41420    1.15055    1.55333
   0.62133    0.77667    1.15055    1.55333
   1.38067    3.45166    0.41420    1.15055    1.55333
   0.62133    0.77667    1.15055    1.55333
   1.38067    3.45166    0.41420    1.15055    1.55333
   0.62133    0.77667    1.15055    1.55333
   0.75933    1.89833    0.22780    0.94917    1.55333
   0.62133    0.77667    0.94917    1.55333
   0.75933    1.89833    0.22780    0.94917    1.55333
   0.62133    0.77667    0.94917    1.55333
PHILADELPHIA                  1535.      8283.      3553.          2.0
  28   3.068   37   70    9
```

FIGURE VII-1

Sensitivity Program Data Deck

VIII OUTPUT

The output generated by the sensitivity program is identical in format to that provided by the general program with the exception of each page being labelled "Satellite Terminal System Sensitivity Analysis".

Figures VIII-1 and VIII-2 show a typical page of output without and with variable names, respectively. If the variable being examined is not normally written on each page, the user should insert his own format and write statement. For example, if the value of vehicle size is being varied, it is preferred to have QSV(K) printed on each page. Format statement number 800 and the write command, WRITE(6,800) QSV(K) are inserted in the program as shown in Figure VIII-3. Output from such a run is shown in Figure VIII-4.

SATELLITE TERMINAL SYSTEM SENSITIVITY ANALYSIS

****

PHILADELPHIA PEAK HOURLY PASSENGERS -- 1970=1535.00 1990= 8283.0 AIRPORT ACCESS TRIPS=12424.50
SERVICE AREA=1776.50 CBD TO AIRPORT DISTANCE=15.00 ACCESS HIGHWAY LANES, 1970=2.0

**********TIME IMPEDANCE SUMMARY**********

TIME IMPEDANCE WITHOUT STS = 66.4833

TIME IMPEDANCE COMPONENTS

	DIRECT		VIA STS	
	TO	FROM	TO	FROM
	26.4725	3.7500	17.4499	3.7500
	5.0208	3.6111	4.5988	3.6111
	5.6627	2.3800	2.4436	0.9520
	2.3800	0.5712	23.2722	21.5357
	3.6836	6.2627	0.0	2.2717
	8.9709	5.0208	6.0000	5.5209
	0.0500	26.4725	0.0500	17.4499
	12.5833		12.5833	
	---	---	---	---
IMPEDANCES	64.8237	48.0683	66.3978	55.0912

TIME IMPEDANCE RATIOS DIRECT: 1.1778 VIA STS: 1.0945

**********COST IMPEDANCE SUMMARY**********

COST IMPEDANCE WITHOUT STS = 3.0692

CAPTIAL COST COMPONENTS

COMPONENT	NO STS	STS1	STS2	STS3	STS4	STS5
ACCESS HIGHWAY	38.2326	22.9034	21.4004	20.6489	20.6489	20.6489
CIRCULATION ROADWAY	15.9539	9.6785	9.6785	9.5578	9.4316	9.1980
AIRPORT PARKING LOT	30.8923	21.5352	21.5352	21.5352	21.5352	21.5352
AIRPORT CURB SPACES	2.6373	2.6373	2.6373	2.6373	1.8385	1.8385
AIRPORT TERMINAL	33.8329	33.8329	33.8329	29.5736	25.5764	23.5851
TOTAL DOMESTIC TERMINAL	121.5490	90.5873	89.0843	83.9527	79.0305	76.8056
TOTAL INTERNATIONAL TERMINAL	137.3419	106.3802	104.8772	99.7456	90.0397	87.8149
COST PER STS TERMINAL	0.0	2.8353	13.4165	26.6924	71.4724	136.1019
TOTAL DOMESTIC SYSTEM	121.5490	93.4227	102.5008	110.6452	150.5029	212.9075
TOTAL INTERNATIONAL SYSTEM	137.3419	109.2155	118.2937	126.4380	161.5122	223.9168

COST IMPEDANCE WITH STS: DIRECT= 2.7580 VIA STS= 3.1583
COST IMPEDANCE RATIOS: DIRECT= 1.1128 VIA STS= 0.9718

****

K= 4 N= 1 G=0.70 DIRECT ACCESS TIME= 56.45 SATELLITE ACCESS TIME= 60.74 BENEFIT TO COST RATIO= 5.8

CAPITAL COST, NO STS= 137.3419 ADDITIONAL COST FOR STS= 24.17 USER COST DIFFERENTIAL= 0.92

****

Typical Sensitivity Run Output

FIGURE VIII-1

SATELLITE TERMINAL SENSITIVITY ANALYSIS

(HUB(J)) Peak Hourly Passengers -- 1970 = (TPHP70) 1990 = (TPHP90) Airport Access Trips = (QQ)
Service Area = (SMSA) CBD to Airport Distance = (DS) Access Highway Lanes, 1970 = (ESTL70)

**********TIME IMPEDANCE SUMMARY**********

TIME IMPEDANCE WITHOUT STS = (TNN)

Time Impedance Components

	Direct		Via STS	
	To	From	To	From
	(TA1)	(TA21)	(TS1)	(TS21)
	(TA2(K))	(TA22)	(TS2)	(TS22(K))
	(TA3(K))	(TA23)	(TS3(K))	(TS23(K))
	(TA4)	(TA24)	(TS4(K))	(TS24(K))
	(TA5(K))	(TA25)	(TS5(K))	(TS25)
	(TA6)	(TA26(K))	(TS6(K))	(TS26)
	(TA7)	(TA27)	(TS7)	(TS27)
	(TA8)		(TS8(K))	
	---	---	---	---
Impedances	(TAONE(K))	(TATWO(K))	(TSONE(K)	(TSTWO(K)

Time Impedance Ratios Direct: (TAIR(K)) Via STS: (TKT(K))

**********COST IMPEDANCE SUMMARY**********

COST IMPEDANCE WITHOUT STS = (DNS)

Capital Cost Components

Component	No STS	STS1	STS2	STS3	STS4	STS5
Access Highway	(AHN)	(AH1)	(AH2)	(AH3)	(AH4)	(AH5)
Circulation Roadway	(CRN)	(CR1)	(CR2)	(CR3)	(CR4)	(CR5)
Airport Parking Lot	(APN)	(AP1)	(AP2)	(AP3)	(AP4)	(AP5)
Airport Curb Spaces	(ACN)	(AC1)	(AC2)	(AC3)	(AC4)	(AC5)
Airport Terminal	(ATN)	(AT1)	(AT2)	(AT3)	(AT4)	(AT5)
Total Domestic Terminal	(TTLDN)	(TTLD1)	(TTLD2)	(TTLD3)	(TTLD4)	(TTLD5)
Total International Terminal	(TTLIN)	(TTLI1)	(TTLI2)	(TTLI3)	(TTLI4)	(TTLI5)
Cost per STS Terminal	(SATN)	(SAT1)	(SAT2)	(SAT3)	(SAT4)	(SAT5)
Total Domestic System	(CSYSDN)	(CSYSD1)	(CSYSD2)	(CSYSD3)	(CSYSD4)	(CSYSD5)
Total International System	(CSYSIN)	(CSYSI1)	(CSYSI2)	(CSYSI3)	(CSYSI4)	(CSYSI5)

Cost Impedance with STS: Direct = (DIC(K)) Via STS = (SIC(K))
Cost Impedance Ratios: Direct = (CKD(K)) Via STS = (CKS(K))

****

K = (K) N = (N) G = (G) Direct Access Time = (AIT(K)) Satellite Access Time = (SIT(K)) Benefit to Cost Ratio = (VRT(K))

Capital Cost, No STS = (CSYSIN) Additional Cost for STS = (CDIF(K)) User Cost Differential = (VAL(K))

****

Program Output Variable Names

Figure VIII-2

```
      WRITE (6,6) TLS,TP,TPZ,VA,VAC,VD,XA,XS
      WRITE (6,16)
      WRITE (6,15) K,LA,LIMIT,LS,N,ND,NL
      WRITE (6,510)
      WRITE (6,18) (QSV(I),I=1,5),(VS(I),I=1,5)
      WRITE (6,520)
      DO 90 J=1,5
   90 WRITE (6,22) J,ZEP(J),ZIP(J),ZOP(J),ZUP(J),ZAT,ZEB,ZEC,ZEP(J),ZEG
      WRITE (6,232)
C     ------------------------------------------------------------------
C     READ DATA FOR A SPECIFIC CITY
C     ------------------------------------------------------------------
      READ(5,33) (HUB(J), J=1,20),TPHP70, TPHP90, SMSA,ESTL70
      READ(5,88) NGAT7,AEP7,IP7,IP8,ICBD
C     ------------------------------------------------------------------
C     CALCULATE MARKET
C     ------------------------------------------------------------------
      QQ=RHO*TPHP90/2.
      CBD=ICBD
      DS=ALAMDA*ICBD
      SMSA=SMSA/2.
C*****------------------------------------------------------------------
C*****------------------------------------------------------------------
C     INSERT LOOP AT THIS POINT TO VARY THE PARAMETER DESIRED.  THE LOO
C     LIMIT SHOULD BE STATEMENT NUMBER 200.
      DO 200 I5=1,3
      QSV(4)=10*I5
C*****------------------------------------------------------------------
C*****------------------------------------------------------------------
      WRITE (6,501)
      WRITE (6,43)
      WRITE(6,44)
      WRITE (6,800) QSV(K)
  800 FORMAT (45X,  14HVEHICLE SIZE =,F5.1,1X,10HPASSENGERS)
      WRITE (6,4)  (HUB(J),J=1,20),TPHP70,TPHP90,QQ
      WRITE (6,2) SMSA,DS,ESTL70
      WRITE (6,660)
C     ------------------------------------------------------------------
C     BEGIN CYCLING
C     ------------------------------------------------------------------
      CYCLE=0.
      TKT(K)=TKTI
      CKS(K)=CKSI
  110 CALL STAB
      IF(G-0.95)111,111,200
  111 QS=QQ*(1-G)/N
      CALL TIME
      CALL COST
      CYCLE=CYCLE+1.
      IF (CYCLE.LE.LIMIT) GO TO 110
C     ------------------------------------------------------------------
C     LIMIT IS THE NUMBER OF ITERATIONS PERFORMED.  EXPERIENCE HAS SHOW
C     CONVERGENCE TO FOUR DECIMAL PLACES CONSISTANTLY WITH LIMIT  =  5
C     ------------------------------------------------------------------
  300 CONTINUE
C     ------------------------------------------------------------------
C     CALCULATE VALUE
C     ------------------------------------------------------------------
      VAL(K)=CO*(TNN-(G*AIT(K)+(1.-G)*SIT(K)))/60.+DNS-(G*DIC(K)+(1.-G)
     XSIC(K))
```

Location of Optional Write Statement and Format

FIGURE VIII-3

SATELLITE TERMINAL SYSTEM SENSITIVITY ANALYSIS

****

VEHICLE SIZE = 10.0 PASSENGERS

PHILADELPHIA PEAK HOURLY PASSENGERS -- 1970=1535.00 1990= 8283.0 AIRPORT ACCESS TRIPS=12424.50

SERVICE AREA=1776.50 CBD TO AIRPORT DISTANCE=13.50 ACCESS HIGHWAY LANES, 1970=2.0

**********TIME IMPEDANCE SUMMARY**********

TIME IMPEDANCE WITHOUT STS = 66.4833

TIME IMPEDANCE COMPONENTS

	DIRECT		VIA STS	
	TO	FROM	TO	FROM
	27.1015	3.7500	16.4561	3.7500
	5.0639	3.6111	4.5988	3.6111
	5.6627	2.3800	2.4436	0.9520
	2.3800	0.5712	20.7482	18.7440
	3.6836	6.2627	0.0	2.0203
	9.0652	5.0639	6.0000	5.5209
	0.0500	27.1015	0.0500	16.4561
	12.5833		12.5833	
	---	---	---	---
IMPEDANCES	65.5901	48.7403	62.8800	51.0545

TIME IMPEDANCE RATIOS DIRECT: 1.1630 VIA STS: 1.1670

**********COST IMPEDANCE SUMMARY**********

COST IMPEDANCE WITHOUT STS = 3.0692

CAPTIAL COST COMPONENTS

COMPONENT	NO STS	STS1	STS2	STS3	STS4	STS5
ACCESS HIGHWAY	38.2326	24.4691	23.1007	22.4164	22.4164	22.4164
CIRCULATION ROADWAY	15.9539	10.3221	10.3221	10.2116	10.1105	9.8894
AIRPORT PARKING LOT	30.8923	22.5705	22.5705	22.5705	22.5705	22.5705
AIRPORT CURB SPACES	2.6373	2.6373	2.6373	2.6373	1.9269	1.9269
AIRPORT TERMINAL	33.8329	33.8329	33.8329	30.0449	26.4900	24.7190
TOTAL DOMESTIC TERMINAL	121.5490	93.8320	92.4636	87.8808	83.5143	81.5223
TOTAL INTERNATIONAL TERMINAL	137.3419	109.6249	108.2564	103.6737	95.0529	93.0609
COST PER STS TERMINAL	0.0	2.3057	11.7478	23.5135	62.4634	121.6946
TOTAL DOMESTIC SYSTEM	121.5490	96.1377	104.2114	111.3943	145.9777	203.2169
TOTAL INTERNATIONAL SYSTEM	137.3419	111.9305	120.0043	127.1872	157.5163	214.7555

COST IMPEDANCE WITH STS: DIRECT= 2.7949 VIA STS= 3.6752

COST IMPEDANCE RATIOS: DIRECT= 1.0981 VIA STS= 0.8351

****

K= 4 N= 1 G=0.73 DIRECT ACCESS TIME= 57.17 SATELLITE ACCESS TIME= 56.97 BENEFIT TO COST RATIO= 6.2

CAPITAL COST, NO STS= 137.3419 ADDITIONAL COST FOR STS= 20.17 USER COST DIFFERENTIAL= 0.82

****

Output from Sample Problem 4

FIGURE VIII-4

IX SENSITIVITY PROGRAM SAMPLE RUNS

SAMPLE PROBLEM 3

For this example consider the effect of varying values of DS (the satellite to airport distance) on FASTSEM results. The range of DS from 9 to 15 is of interest.

Two cards are inserted in the program:

```
DO 200 I5 = 1,7
DS = CBD + (I5-1)
```

The initial value of CBD is 9.0, so the loop indeed will vary DS from 9.0 to 15. in increments of 1.0 miles.

A partial listing of the program is shown in Figure IX-1. The cards in question are located above line STS 1315. The data used is listed in Figure IX-2. It is the same as discussed in Section VII above.

A sample page of output for DS = 15 miles is shown in Figure IX-3.

SAMPLE PROBLEM 4

As mentioned in Section VIII, the program does not print out values for all of the parameters. Therefore when conducting sensitivity to one of these it may be desirable to add statements to include it on the output. For example, examine the sensitivity to different vehicle sizes.

The following cards are inserted above line STS1315 to vary QSV(4) from 10 to 30 in steps of 10:

```
DO 200 I5 = 1,3
QSV(4) = 10.*I5
```

```
      WRITE (6,6) TL5,TP,TPZ,VA,VAC,VD,XA,XS
      WRITE (6,16)
      WRITE (6,15) K,LA,LIMIT,LS,N,ND,NL
      WRITE (6,510)
      WRITE (6,18) (QSV(I),I=1,5),(VS(I),I=1,5)
      WRITE (6,520)
      DO 90 J=1,5
   90 WRITE (6,22) J,ZEP(J),ZIP(J),ZOP(J),ZUP(J),ZAT,ZEB,ZEC,ZEP(J),ZEG
      WRITE (6,232)
C     ------------------------------------------------------------------
C     READ DATA FOR A SPECIFIC CITY
C     ------------------------------------------------------------------
      READ(5,33) (HUB(J), J=1,20),TPHP70, TPHP90, SMSA,ESTL70
      READ(5,88) NGAT7,AEP7,IP7,IP8,ICBD
C     ------------------------------------------------------------------
C     CALCULATE MARKET
C     ------------------------------------------------------------------
      QQ=RHO*TPHP90/2.
      CBD=ICBD
      DS=ALAMDA*ICBD
      SMSA=SMSA/2.
C*****------------------------------------------------------------------
C*****------------------------------------------------------------------
C     INSERT LOOP AT THIS POINT TO VARY THE PARAMETER DESIRED.  THE LOOP
C     LIMIT SHOULD BE STATEMENT NUMBER 200.  IN THIS SAMPLE PROBLEM,
C     THE SENSITIVITY TO DS IS BEING STUDIED, AND THE FOLLOWING TWO CARD
C     ARE USED TO VARY DS OVER THE DESIRED RANGE
      DO 200 I5=1,7
      DS=CBD+(I5-1.)
C*****------------------------------------------------------------------
C*****------------------------------------------------------------------
      WRITE (6,501)
      WRITE (6,43)
      WRITE(6,44)
      WRITE (6,4)   (HUB(J),J=1,20),TPHP70,TPHP90,QQ
      WRITE (6,2) SMSA,DS,ESTL70
      WRITE (6,660)
C     ------------------------------------------------------------------
C     BEGIN CYCLING
C     ------------------------------------------------------------------
      CYCLE=0.
      TKT(K)=TKTI
      CKS(K)=CKSI
  110 CALL STAB
      IF(G-0.95)111,111,200
  111 QS=QQ*(1-G)/N
      CALL TIME
      CALL COST
      CYCLE=CYCLE+1.
      IF (CYCLE.LE.LIMIT) GO TO 110
C     ------------------------------------------------------------------
C     LIMIT IS THE NUMBER OF ITERATIONS PERFORMED.  EXPERIENCE HAS SHOW
C     CONVERGENCE TO FOUR DECIMAL PLACES CONSISTANTLY WITH LIMIT  =  5
C     ------------------------------------------------------------------
  300 CONTINUE
C     ------------------------------------------------------------------
C     CALCULATE VALUE
C     ------------------------------------------------------------------
      VAL(K)=CC*(TNN-(G*AIT(K)+(1.-G)*SIT(K)))/60.+DNS-(G*DIC(K)+(1.-G)
     XSIC(K))
```

Partial Listing of Sample Problem 3

Figure IX-1

```
1.5        -2.33      -1.23      .5         .6667      .6667      1080.      360.
.6         .2         .1         .1         .6         .2         .1         .1
3.         3.         8.         4.         2.         .68        4500.      .1
10.        12.        3.         2.         .15        12.        5.         3600.
.3         800.       .16275     50.        10.        1.25       700.       500.
500.       300.       300.       200.       400.       200.       300.       10.
300.       6834.      15.        10.        1000.      600.       10.        2.
5.         4.         1.         30.        15.        30.        3.         3.
3.         3.         3.         3.         3.         3.         3.         .4
.4         .4         .4         .4         .4         .4         .4         .4
8.
350.       350.       15.        30.        4.12       .5         10.        .07265
8000.      24000.     32500.     250000.    350000.    500000.    2000000.   7000000.
1.5        20.        1.2        1.8        20.        1.2        1.8        20.
20.        .0833      .0833      .0833      .0833      .0833      16.
         2          4        250          2
  4  1
  5
10.        30.        50.        20.        80.
30.        30.        40.        80.        100.
   1.38067    3.45166    0.41420    1.15055    1.55333
   0.62133    0.77667    1.15055    1.55333
   1.38067    3.45166    0.41420    1.15055    1.55333
   0.62133    0.77667    1.15055    1.55333
   1.38067    3.45166    0.41420    1.15055    1.55333
   0.62133    0.77667    1.15055    1.55333
   0.75933    1.89833    0.22780    0.94917    1.55333
   0.62133    0.77667    0.94917    1.55333
   0.75933    1.89833    0.22780    0.94917    1.55333
   0.62133    0.77667    0.94917    1.55333
PHILADELPHIA                 1535.     8283.     3553.          2.0
  28  3.068  37  70   9
```

Data Listing for Sample Problems 3 and 4

FIGURE IX-2

SATELLITE TERMINAL SYSTEM SENSITIVITY ANALYSIS

****

PHILADELPHIA PEAK HOURLY PASSENGERS -- 1970=1535.00 1990= 8283.0 AIRPORT ACCESS TRIPS=12424.50

SERVICE AREA=1776.50 CBD TO AIRPORT DISTANCE=15.00 ACCESS HIGHWAY LANES, 1970=2.0

**********TIME IMPEDANCE SUMMARY**********

TIME IMPEDANCE WITHOUT STS = 66.4833

TIME IMPEDANCE COMPONENTS

	DIRECT		VIA STS	
	TO	FROM	TO	FROM
	26.4725	3.7500	17.4499	3.7500
	5.0208	3.6111	4.5988	3.6111
	5.6627	2.3800	2.4436	0.9520
	2.3800	0.5712	23.2722	21.5357
	3.6836	6.2627	0.0	2.2717
	8.9709	5.0208	6.0000	5.5209
	0.0500	26.4725	0.0500	17.4499
	12.5833		12.5833	
	---	---	---	---
IMPEDANCES	64.8237	48.0683	66.3978	55.0912

TIME IMPEDANCE RATIOS DIRECT: 1.1778 VIA STS: 1.0945

**********COST IMPEDANCE SUMMARY**********

COST IMPEDANCE WITHOUT STS = 3.0692

CAPTIAL COST COMPONENTS

COMPONENT	NO STS	STS1	STS2	STS3	STS4	STS5
ACCESS HIGHWAY	38.2326	22.9034	21.4004	20.6489	20.6489	20.6489
CIRCULATION ROADWAY	15.9539	9.6785	9.6785	9.5578	9.4316	9.1980
AIRPORT PARKING LOT	30.8923	21.5352	21.5352	21.5352	21.5352	21.5352
AIRPORT CURB SPACES	2.6373	2.6373	2.6373	2.6373	1.8385	1.8385
AIRPORT TERMINAL	33.8329	33.8329	33.8329	29.5736	25.5764	23.5851
TOTAL DOMESTIC TERMINAL	121.5490	90.5873	89.0843	83.9527	79.0305	76.8056
TOTAL INTERNATIONAL TERMINAL	137.3419	106.3802	104.8772	99.7456	90.0397	87.8149
COST PER STS TERMINAL	0.0	2.8353	13.4165	26.6924	71.4724	136.1019
TOTAL DOMESTIC SYSTEM	121.5490	93.4227	102.5008	110.6452	150.5029	212.9075
TOTAL INTERNATIONAL SYSTEM	137.3419	109.2155	118.2937	126.4380	161.5122	223.9168

COST IMPEDANCE WITH STS: DIRECT= 2.7580 VIA STS= 3.1583

COST IMPEDANCE RATIOS: DIRECT= 1.1128 VIA STS= 0.9718

****

K= 4 N= 1 G=0.70 DIRECT ACCESS TIME= 56.45 SATELLITE ACCESS TIME= 60.74 BENEFIT TO COST RATIO= 5.8

CAPITAL COST, NO STS= 137.3419 ADDITIONAL COST FOR STS= 24.17 USER COST DIFFERENTIAL= 0.92

****

Output from Sample Problem 3

FIGURE IX-3

So that QSV(4) will be writen on each page, the following cards are inserted above line STS1340.

```
WRITE (6,800) QSV(K)
800 FORMAT(45X,14HVEHICLE SIZE = ,   F5.1, IX, 10HPASSENGERS)
```

These additions are seen in the partial listing of Figure VIII-3. The remainder of the program, and the input data used areidentical to that of Sample Problem 3.

Output is shown in Figure VIII-4. Note that QSV is printed on each page now, and only the original value of QSV(4) is printed on the input summary page.

APPENDIX A

FASTSEM Glossary

COMPUTER VARIABLE NAME	MEANING*
A	Empirically derived constant used in determining gamma.
AA	Dummy variable used as temporary storage in subroutine COST
A1,...A5	Airport circulation roadway area with STS types 1 through 5.
ABS	Fraction of satellite passengers (arriving by bus, taxi, rented and driven autos) who arrive by bus.
AC	Average area of a one vehicle curb space. (ft^2)
ACA	Total curb space area at the airport. (ft^2)
ACN	Cost of airport curb spaces without STS.
AC13	Airport curb space area with STS 1, 2, and 3. (ft^2)
AC45	Airport curb space area with STS 4 and 5. (ft^2)
ADDI	Additional terminal cost for providing international terminal facilities.
AEP7	Annual enplaned passengers, 1970 ($\times 10^{-6}$).
AEP9	Annual enplaned passengers, 1990 ($\times 10^{-6}$).
AH1,...AH5	Access highway cost with STS types 1 through 5.
AHN	Access highway cost without STS.
AIT	Average time impedance going directly to and from airport.
ALAMDA	Empirical coefficient relating satellite to airport DS and CBD to airport distance.
ALC	Empirical exponent in the equation for gamma.
ALPHA1,...ALPHA9	Empirically derived exponents in the delay model.

* Units of time are minutes, units of traffic volume are objects (people, vehicles, etc.) perhour, and units of cost are dollars in millions unless otherwise noted.

ALPHAB	Percent of airport curb traffic arriving by bus.
ALPHBE	Fraction of passengers with checked baggage.
ALT	Empirically derived exponent in the equation for GAMMA.
AN	Circulation roadway area, no STS.
AOP7	Peak hour aircraft operations, 1970.
AOP8	Peak hour aircraft operations, 1980.
AOP9	Peak hour aircraft operations, 1990.
AP1,...AP5	Airport parking lot area, STS 1 through 5.
APN	Airport parking lot area, no STS.
AS	Floor area per airport parking space.
ASC	Total satellite terminal floor area (parking, curbs, and terminal)
AT1,...AT5	Airport terminal costs, STS 1 through 5.
ATN	Airport terminal cost without STS.
AZAP	Time delay factor for parking service at airport.
B1,...B9	Empirically derived constant in delay model.
BASE	Absolute value of the benefit to capital cost ratio, VRT.
BGAIN	Net user benefits for best STS relative to no STS for a given city. ($)
B...	Prefix denoting the value of a variable in the design with the largest benefit to cost ratio. See Table 1.
CA	Circulation roadway capacity flow rate.
CAA	Cost of airport curb space ($/ft^2).
CAR	Unit operation for an automobile ($ mile).
CB	Average baggage recovery rate (passengers with bags/min.)
CBD	CBD to airport distance. (miles)
CC	Cost of airport terminal construction $/ft^2).
CCS	Satellite terminal curb space unit cost.
CDIF(K)	Total capital coat differential (STS type K less no STS cost).

CG	Airport gate processing rate.
CGAIN	Cumulative net user benefits for all cities tested.
CKD(K)	Cost impedance ratio: (direct, no STS) / (direct, STS type K).
CKS(K)	Cost impedance ratio: (direct, no STS) / (via STS type K).
CKS1	Initial value of CKS(K) in the convergence of demand loop.
CL	Capacity flow rate of the aircraft entrance.
CLA	Land cost at airport ($/ft^2).
CLIMO	Unit operating cost of a limousine ($/mile).
CLM	Cost per lane mile of access highway.
CLS	Loading rate of STS vehicle.
CLSS	Cost of land at the STS terminal ($/ft^2).
CNS	Cost of airport and access highway facilities without STS.
CO	System user's time value ($/hour).
CPK	Parking lot acceptance rate.
CPKA	Capital cost of airport parking facility.
CPKS	Capital cost of Satellite parking facility.
CR1,...CR5	Circulation roadway costs for STS 1 through 5.
CR	Capital recovery factor.
CRF	Capital recovery factor for vehicles.
CRN	Circulation roadway cost without STS.
CSC4	Satellite terminal circulation roadway cost (STS4).
CSC5	Satellite terminal circulation roadway cost (STS5).
CSH	Shelter cost for STS type two.

CSTS	Cost of STS system.
CSTSN	Cost of STS without STS (defined as zero).
CST3	Cost of satellite terminal building (STS3).
CST4	Cost of satellite terminal building (STS4).
CST5	Cost of satellite terminal building (STS5).
CSYSD1,...CSYSD5	Total domestic system cost with STS 1 through 5.
CSYSDN	Total domestic system cost without STS.
CSYSI1,...CSYSI5	Total international system cost with STS 1 through 5.
CSYSIN	Total international system cost without STS.
CTVW3	Capital cost of the terminal vehicle and way for STS type 3.
CTVW4	Capital cost of the terminal, vehicle, and way for STS type 4.
CTVW5	Capital cost of the terminal, vehicle, and way for STS type 5.
CV1	Cost per vehicle used in STS1.
CV2	Cost per vehicle used in STS2.
CV3	Cost per vehicle used in STS3.
CV4	Cost per vehicle used in STS4.
CV5	Cost per vehicle used in STS5.
CW3	Cost per mile of guideway for STS3.
CW4	Cost per mile of guideway for STS4.
CW5	Cost per mile of guideway for STS5.
CYCLE	Counter used in the convergence of demand loop.
DA	Average airline distance from O/D to airport (miles).
DAC	Average circulation roadway trip length (miles).
DAC1	Delay function in TA2.
DAC2	Delay function in TA2.

DBAR	Average distance from curb to gate. (ft)
DD	Average airline distance from O/O to satellite terminal. (miles)
DIC(K)	Cost impedance for direct access with STS Technology K ($).
DIF	STS capital cost increment to the system without STS (equivalent to CDIF).
DIFER	Additional cost of providing STS.
DMAX	Maximum distance from curb to gate (ft).
DN1	Circulation roadway delay function without STS.
DN2, DN22	Curb transfer delay functions with no STS.
DN23	Circulation roadway delay function with no STS.
DN3P	Airport parking delay function without STS.
DN4	Circulation roadway delay function, no STS.
DN5	Airport processing delay, no STS.
DNN	Direct operating cost share of STS user cost. ($).
DNN1	Circulation roadwya delay function without STS.
DNS	Cost impedance, direct access with no STS. ($).
DPMA	Airport people mover distance (ft.)
DPMS	Satellite people mover distance (ft.)
DQ	Increase in airport access people traffic (one-way) 1970-1990.
DQA	Portion of DQ that goes directly to the airport.
DQAV	DQA expressed as vehicle traffic.
DQS	Portion of DQ that goes to airport satellite systems.
DQSV	DQS expressed as satellite to apriport vehicle loads.
DQV	Increase in total airport vehicle access traffic (one-way) 1970-1990.

DRS	Parking lot ramp length at satellite (ft.).
DR	Parking lot ramp (ft.)
DS	Distance from satellite terminal to airport (miles).
DSS	Satellite terminal walking distance. (ft.)
DTP	Increase in typical peak hourly passengers, 1970 to 1990.
DWA	Airport terminal walking distance. (ft.)
DWS	Satellite parking lot walking distance (ft.)
EAC	(Average number of airport circulation vehicles/circulation passenger)$^{-1}$.
EB	Average occupancy of vehicles arriving at the airport parking lot.
EBS	Average occupancy of vehicles arriving at the satellite terminal parking area.
ECAI	Inverse average occupancies of vehicles arriving at the airport curb.
ESTL70	Number of access highway lanes in each direction, 1970.
G	Fraction of total traffic that chooses to go directly to the airport.
GAIN	Total user benefits (i.e., cost savings) for a given city.
GAMMA	Fraction of the traffic that goes directly to the airport regardless of the number of satellites.
GATE7	Number of airport gates, 1970.
GATE9	Number of airport gates, 1990.
GATES	Increase in airport gate capacity, 1970-1990.
HUB	City name.
ICBD	Major CBD to airport distance, equal to CBD (miles).
IP7	Peak hour acft. operations in 1970, equal to TP7.
IP8	Peak hour acft. operations in 1980, equal to TP8.

K	Index used to represent an STS technology (K = 1, 2, 3, 4, or 5).
LA	Number of levels of airport parking structure.
LIMIT	Number of cycles in the convergence of demand loop.
LS	Number of levels of parking at the STS terminal.
ML	Number of aircraft passenger loading points.
NL	Number of parking lot levels.
N	Number of STS terminals.
NCITY	Number of cities to be examined in the program.
ND	Number of days per year that the system is assumed to operate.
NGAT7	Number of gates at the airport, 1970, equal to GATE7.
OPTION	If OPTION = 0, then the program will examine each city and select that combination of K and N that results in the largest value of VRT. If OPTION ≠ 0, output is printed for each combination of K and N.
PAN	Airport parking area (no STS).
PAW	Airport parking area (with STS).
PPKS	Satellite terminal parking unit cost.
Q1A	Average occupancy of automobiles arriving at the airport curb.
Q2A	Average occupancy of busses arriving at the airport curb.
Q3A	Average occupancy of rental autos arriving at the airport curb.
Q4A	Average occupancy of rental autos arriving at the airport curb.
Q1S	Average occupancy of autos at the satellite terminal.
Q2S	Average occupancy of busses at the satellite terminal.

Q3S	Average occupancy of driven autos and taxis at the satellite terminal.
Q4S	Average occupancy of rented autos at the satellite terminal.
Q(K)	QQ for systems K - 1, 3; QAA for K - 4,5.
QA	Total direct access person trips.
QQ	Total airport passenger traffic.
QS	Total person traffic at a satellite terminal.
QSV(K)	Number of passengers per satellite vehicle for STS type K.
QV	Aircraft passenger capacity.
RB	Rate at which luggage arrives at the claim area.
RHO	Airport access traffic intensity. (person trips/air passenger).
RHOS	Satellite access traffic intensity.
RNOSAT	Average direct O/D to airport distance with no STS. (miles)
RP	Rate at which passengers arrive at the baggage claim area.
SAT1,...SAT5	Cost per satellite terminal for STS types 1 through 5.
SEPAT	Capital cost portion of direct access without STS user cost. ($/access person).
SIC(K)	Cost impedance for access via STS technology K = 1 through 5. ($).
SCA	Total satellite terminal floor area (parking, curb, and terminal).
SIT	Average access time via the satellite terminal.
SMSA	Area of the SMSA (mi.^{2}).
T1A	Percent of arriving/deplaning passengers using parking facilities.
T2A	Percent of deplaning passengers using the bus.
T3A	Percent of deplaning passengers using taxis or driven cars.
T4A	Percent of deplaning passengers using rented cars.

T1S	Fraction of satellite terminal arrivals who utilize parking.
T2S	Fraction of satellite terminal users arriving by bus.
T3S	Fraction of satellite terminal users arriving by driven auto and taxi.
T4S	Fraction of satellite terminal users arriving by rented auto.
TA1	Access to airport travel time.
TA2	Airport circulation roadway travel time.
TA3	Airport parking or curb transfer time.
TA4	Airport walking time.
TA5	Airport processing time.
TA6	Airport waiting time.
TA7	Aircraft loading time.
TA8	Predeparture ingression loss.
TA21	Aircraft unloading time.
TA22	Baggage claim time.
TA23	Airport walking time.
TA24	Transfer time to parking or curb loading area.
TA25	Time to recover automobile, or curb wainting time.
TA26	Airport circulation roadway travel time.
TA27	Access time to destination.
TAIR	Time impedance ratio: (time, direct with no STS/time direct with STS).
TAONE	Time impedance for going directly to the airport.
TAT	Airport transfer time.

TATWO	Time impedance for going directly from the airport.
TB	Bus interdeparture time (minutes).
TC	Average vehicle unloading time.
TCA	Average time a vehicle spends at the airport curb.
TCS	Average curb occupancy time per vehicle at the satellite terminal.
TCTA	Airport curb transfer time for arriving passengers.
TCTS	Satellite curb transfer time for arriving passengers.
TCWA	Airport curb transfer time for deplaning passengers.
TCWS	Satellite curb transfer time for deplaning passengers.
TDUR	Average airport parking duration.
TDURS	Average parking duration at the satellite terminal.
TKT	Time impedance ratio: (Time direct with no STS/time via STS).
TKTI	Initial value of TKT in the convergence of demand loop.
TL1	Loading time for the vehicle used in STS1.(hours)
TL2	Loading time for the vehicle used in STS2.(hours)
TL3	Loading time for the vehicle used in STS3.(hours)
TL4	Loading time for the vehicle used in STS4.(hours)
TL5	Loading time for the vehicle used in STS5.(hours)
TN1	Departing passenger time impedance, without STS.
TN2	Arriving passenger time impedance without STS.
TNN	Average time impedance, direct without STS.

TP	Total time per day the system is operated.
TP3	Airport parking time without STS.
TP7	Peak hour aircraft operations, 1970.
TP8	Peak hour aircraft operations, 1980.
TPHP70	Typical peak hour passengers, 1970.
TPHP90	Typical peak hour passengers, 1990.
TPKA	Airport parking time.
TPKS	Satellite parking time.
TPZ	(Same as TP).
TRA	Time to recover automobile at airport parking lot.
TRS	Time to recover automobile at satellite parking lot.
TS1	Satellite terminal access time.
TS2	Satellite parking or curb transfer time.
TS3	Satellite processing time.
TS4	Transit time to sirport.
TS5	Airport processing time.
TS6	Waiting and concession time.
TS7	Aircraft loading time.
TS8	Predeparture ingression loss.
TS21	Aircraft unloading time.
TS22	Baggage claim time.
TS23	Time to transfer to the satellite system
TS24	Transit time to the satellite terminal.
TS25	Satellite baggage claim time.
TS26	Time to recover automobile or curb waiting time at the satellite terminal.
TS27	Access time to destination.
TSC	Curb vehicle dwell time.
TSL	Vehicle loading time.
TSM	Time for movement to the airport.
TSONE	Time impedance for airport access via the STS.
TST	Satellite transfer time.
TSW	Satellite waiting time.

TTL1,....TTL5	Total international terminal cost with STS 1 through 5.
TTLN	Total international terminal cost without STS.
TTLDN	Total domestic terminal cost without STS.
TTLI1,...TTLI5	International terminal cost with STS 1 through 5.
TTLIN	International Terminal cost without STS.
TWC	Airport terminal passenger waiting and concession use times.
UA	Mean input processing rate at airport parking lot.
UPA	Average passenger service rate at airport counter.
UPS	Average passenger service rate at STS terminal counter.
US	Mean input processing rate at the satellite parking lot.
VA	Average direct access highway pseed (mph).
VAC	Design speed of output circulation roadway. (mph)
VAL	Weighted user cost differential, no STS less STS ($).
VC	Total vehicle fleet cost for STS type 2.
VD	Average access velocity in the satellite terminal market area. (mph).
VRT	Differential user benefit to capital cost ratio.
VS(K)	Satellite transit vehicle speed. (mph).
VW	Walking speed, assumed to be 3.5 f.p.s.
XA	Major dimension of airport parking lot (ft.)
XN	Number of satellite terminals.
XPT	Satellite terminal building user unit cost.
XS	Satellite parking lot dimension (ft.)
XSC	Satellite terminal circulation roadway unit cost.
XP	Satellite system terminals, vehicles, and way user unit cost.

XCT	Satellite terminal cost ($/passenger/terminal).
XF	Satellite vehicle fuel cost ($/mi).
XVP	Satellite vehicle cost ($/vehicle/day).
XWP	Satellite way cost ($/day/mi).

Traffic Delay Factors and Traffic Intensity Ratios

$$(TDF = (b + TIR)^{Alpha})$$

- Listed in order of Appearance in Program -

TDF		TIR	
Traffic Delay Factor	Used in Impedance Eq.	Traffic Intensity Ratio	Defined by
ZØT	DAC1 in TA2	-	-
ZAP	DAC2 in TA2	ZEP(K)	Q(K)/(EAC*CA)
AZAP	TPKA	ZIP(K)	T1A*Q(K)/(EA*UA)
ZA	TCTA	ZOP(K)	TG(1-T1A)*Q(K)/(60*EAC*CSA)
ZAA	TA5(K)	ZUP	Q(K)/(RHO*CPS)
ZAB	TPKS	ZAT	QST*T1S/(US*ECS)
ZB	TCTS	ZEB	TC*(1-T1S)*QS/(60*ECS*CSS)
ZC	TS3(K)	ZEC	QS/(RHOS*CPS)
ZD	TSL	-	-
ZE	TSL	—	—
ZF	TS5(K)	ZEF	Q(K)/(RHO*CAA(K))
ZG	TRS in TS26	ZEG	(same as ZAT)

```
BESVRT=VRT(K)
BASVRT=BASE
BK=K
BN=N
BG=G
BTNN=TNN
BAIR=TAIR(K)
BAIT=AIT(K)
BSIT=SIT(K)
BTKT=TKT(K)
BDNS=DNS
BDIC=DIC(K)
BSIC=SIC(K)
BCKS=CKS(K)
BVAL=VAL(K)
BDIF=CDIF(K)
BGAIN=GAIN(K)
BCKD=CKD(K)
BAONE=TAONE(K)
BATWO=TATWO(K)
BSONE=TSONE(K)
BSTWO=TSTWO(K)
BA1=TA1
BA21=TA21
BS1=TS1
BS21=TS21
BA2=TA2(K)
BA22=TA22
BS2=TS2
BS22=TS22(K)
BA3=TA3(K)
BA23=TA23
BS3=TS3(K)
BS23=TS23(K)
BA4=TA4
BA24=TA24
BS4=TS4(K)
BS24=TS24(K)
BA5=TA5(K)
BA25=TA25
BS5=TS5(K)
BS25=TS25
BA6=TA6
BA26=TA26(K)
BS6=TS6(K)
BS26=TS26
BA7=TA7
BA27=TA27
BS7=TS7
BS27=TS27
BA8=TA8
BS8=TS8(K)
BAHN=AHN
BAH1=AH1
BAH2=AH2
BAH3=AH3
BAH4=AH4
BAH5=AH5
BCRN=CRN
BCR1=CR1
BCR2=CR2
BCR3=CR3
BCR4=CR4
BCR5=CR5
BAPN=APN
BAP1=AP1
BAP2=AP2
BAP3=AP3
BAP4=AP4
BAP5=AP5
BACN=ACN
BAC1=AC1
BAC2=AC2
BAC3=AC3
BAC4=AC4
BAC5=AC5
BATN=ATN
BAT1=AT1
BAT2=AT2
BAT3=AT3
BAT4=AT4
BAT5=AT5
BTTLDN=TTLDN
BTTLD1=TTLD1
BTTLD2=TTLD2
BTTLD3=TTLD3
BTTLD4=TTLD4
BTTLD5=TTLD5
BTTLIN=TTLIN
BTTLI1=TTLI1
BTTLI2=TTLI2
BTTLI3=TTLI3
BTTLI4=TTLI4
BTTLI5=TTLI5
BSATN=SATN
BSAT1=SAT1
BSAT2=SAT2
BSAT3=SAT3
BSAT4=SAT4
BSAT5=SAT5
BSYSDN=CSYSDN
BSYSD1=CSYSD1
BSYSD2=CSYSD2
BSYSD3=CSYSD3
BSYSD4=CSYSD4
BSYSD5=CSYSD5
BSYSIN=CSYSIN
BSYSI1=CSYSI1
BSYSI2=CSYSI2
BSYSI3=CSYSI3
BSYSI4=CSYSI4
BSYSI5=CSYSI5
```

Table A-1

Variables and their temporary storage names

APPENDIX B

Program Readouts

This appendix contains a printed copy of the two FASTSEM decks. Columns 73 through 80 of each card are used for identification. Each card is numbered sequentially in these columns. The listings that follow contain only the contents of columns 1 through 72; columns 73 through 80 are omitted so that the proper left margin can be provided.

APPENDIX B

PROGRAM READOUTS

PART ONE: BASIC FASTSEM PROGRAM

```
$JOB
C*-----------------------------------------------------------------------
C     THIS PROGRAM COMPUTES COST AND TIME IMPEDANCES BY SUCCESSIVE
C     ITERATIONS VARYING DEMAND, KEEPING TRAFFIC INTENSITITES CONSTANT.
C     EITHER IMPEDANCE VALUES FOR ALL K AND N ARE PRINTED, OR, IF THE
C     VARIABLE "OPTION" IS EQUAL TO ZERO, THEN THE BEST STS TECHNOLOGY
C     AND NUMBER OF TERMINALS FOR A GIVEN CITY ARE DETERMINED.
C*-----------------------------------------------------------------------
      COMMON ALC,ALPHA1,ALPHA2,ALPHA3,ALPHA4,ALPHA5,ALPHA6,ALPHBE,ALT,
     XEAC,RHO,RHOS,T1A,T2A,T3A,T4A,T1S,T2S,T3S,T4S,UA,UPA,UPS,
     XUS,A,AEP7,AIT(5),B1,B2,B3,B4,B5,B6,CA,CAR,CB,CDIF(5),CG,CKD(5),
     XCKS(5),CL,CLIMO,CLS,CPA,CPK,CPS,CRF,CSA,CSS,DA,DAC,DBAR,DD,DIC(5),
     XDMAX,DNS,DPMA,DR,DRS,DS,DSS,DWA,DWS,ESTL70,G,GAMMA,HUB(20),ICBD,
     XIP7,IP8,K,ML,N,NGAT7,QAA,QO,QS,QSV(5),QV,RB,RP,SIC(5),SIT(5),SMSA,
     XT7,TAIR(5),TB,TC,TCS,TDUR,TKT(5),TNN,TPHP70,TPHP90,VA,VAC,VD,VS(5)
     X,XA,XS,ZAT,ZEB,ZEC,ZEF(5),ZEG,ZEP(5),ZIP(5),ZOP(5),ZUP(5)
     X,ALPHA7,ALPHA8,ALPHA9,B7,B8,B9,DPMS,RNOSAT
     X,TP,CYCLE,LIMIT
      COMMON          TS3(5),                TS5(5),TS6(5),TS8(5),TS22(5)
     X          ,TS23(5),          TS24(5),TSONE(5),TSTWO(5),TS4(5),
     X           TAONE(5),TATWO(5),TA2(5),TA3(5),TA5(5),TA26(5),TS2,
     XTA1,TA21,TS1,TS21,TA22,TA23,TA4,TA24,TA25,TS25,TA6,TS26,TA7,TA27,
     XTS7,TS27,TA8,AHN,AH1,AH2,AH3,AH4,AH5,CRN,CR1,CR2,CR3,CR4,CR5,APN,
     XAP1,AP2,AP3,AP4,AP5,ACN,AC1,AC2,AC3,AC4,AC5,ATN,AT1,AT2,AT3,AT4,
     XAT5,TTLDN,TTLD1,TTLD2,TTLD3,TTLD4,TTLD5,TTLIN,TTLI1,TTLI2,TTLI3,
     XTTLI4,TTLI5,SATN,SAT1,SAT2,SAT3,SAT4,SAT5,CSYSDN,CSYSD1,CSYSD2,
     XCSYSD3,CSYSD4,CSYSD5,CSYSIN,CSYSI1,CSYSI2,CSYSI3,CSYSI4,CSYSI5
     X                                ,AC,AS,CAA,CC,CLA,CLM,CLSS,CR
     X,CV1,CV2,CV3,CV4,CV5,CW3,CW4,CW5,EB,Q2A,Q3A,Q4A,Q2S,Q3S,Q4S,TCA,
     X    TL1,TL2,TL3,TL4,TL5,TPZ,     LA,      LS,NCITY,ND,NL, TSC
      DIMENSION VAL(5), VRT(5), GAIN(5)
      REAL NL
      INTEGER OPTION
C     ------------------------------------------------------------------
C     READ AND WRITE INPUT DATA
C     ------------------------------------------------------------------
      READ (5,10) ALAMDA,ALC,ALT,      ALPHBE,UPA,UPS,UA,US,T1A,T2A,T3A
     XT4A,T1S,T2S,T3S,T4S,RHO,RHOS,ECA,ECS,EAC,A,  CA,CAR,CB,CG,CKSI,CL
     XCLIMO,CLS,CO,CPA,CPK,CPS,CRF,CSA,CSS,DAC,DMAX,DR,DPMA,DPMS,DRS,
     XDSS,DWA,DWS,DBAR,ML,QV,   QAA,   RP,RB,XA,XS,TB,TC,TCS,TDUR,TKTI,
     XVA,VAC,VD,ALPHA1,ALPHA2,ALPHA3,ALPHA4,ALPHA5,ALPHA6,ALPHA7,ALPHA8
     XALPHA9,B1,B2,B3,B4,B5,B6,B7,B8,B9,TP
      READ (5,10)                          AC,AS,CAA,CC,CLA,CLM,CLSS,CR
     X,CV1,CV2,CV3,CV4,CV5,CW3,CW4,CW5,EB,Q2A,Q3A,Q4A,Q2S,Q3S,Q4S,TCA,
     XTSC ,TL1,TL2,TL3,TL4,TL5,TPZ
      READ (5,17) LA,LS,ND,NL
      READ (5,17) OPTION
      IOPT=OPTION
      READ (5,14) LIMIT, NCITY
      READ (5,12) (QSV(I),I=1,5)
      READ (5,12) (VS(I),I=1,5)
      DO 13 J=1,5
   13 READ (5,12) ZEP(J),ZIP(J),ZOP(J),ZUP(J),ZAT,ZEB,ZEC,ZEF(J),ZEG
      WRITE (6,501)
      WRITE (6,709)
      WRITE (6,231)
      WRITE (6,400)
      WRITE (6,3) ALC,ALPHA1,ALPHA2,ALPHA3,ALPHA4,ALPHA5,ALPHA6,ALPHA7,
     XALPHA8,ALPHA9
      WRITE (6,410)
```

```
      WRITE (6,3) ALT,B1,B2,B3,B4,B5,B6,B7,B8,B9
      WRITE (6,420)
      WRITE (6,3)        ALPHBE,EB,ECA,ECS,EAC,RHO,RHOS,UPA,UPS,UA
      WRITE (6,430)
      WRITE (6,3)     US,T1A,T2A,T3A,T4A,T1S,T2S,T3S,T4S,CRF
      WRITE (6,440)
      WRITE (6,3) A,AC,CA,CAR,CB,CC,CG,CKSI,CL,CLA
      WRITE (6,450)
      WRITE (6,3) CLIMO,CLM,CLS,CLSS,CPA,CPS,CR,CSA,CSS,CV1
      WRITE (6,460)
      WRITE (6,3) CV2,CV3,CV4,CV5,CW3,CW4,CW5,DAC,DMAX,DPMS
      WRITE (6,470)
      WRITE (6,3) DRS,DSS,DWA,DWS,DBAR,ML,QV,QAA,RB,RP
      WRITE (6,480)
      WRITE (6,3) TB,TC,TCA,TCS,TDUR,TKTI,TL1,TL2,TL3,TL4
      WRITE (6,490)
      WRITE (6,6) TL5,TP,TPZ,VA,VAC,VD,XA,XS
      WRITE (6,16)
      WRITE (6,15) IOPT,LA,LIMIT,LS,NCITY,ND,NL
      WRITE (6,510)
      WRITE (6,3) (QSV(I),I=1,5),(VS(I),I=1,5)
      WRITE (6,520)
      DO 90 J=1,5
   90 WRITE (6,22) J,ZEP(J),ZIP(J),ZOP(J),ZUP(J),ZAT,ZEB,ZEC,ZEF(J),ZEG
      WRITE (6,232)
C     ------------------------------------------------------------------
C     INITIALIZE COSTS
C     ------------------------------------------------------------------
      CGAIN=0.
      CITIES=0.
      CNS=0.
      CSTS=0.
      DO 800 I=1,NCITY
C     ------------------------------------------------------------------
C     READ DATA FOR A SPECIFIC CITY
C     ------------------------------------------------------------------
      READ(5,33) (HUB(J), J=1,20),TPHP70, TPHP90, SMSA,ESTL70
      READ(5,88)NGAT7,AEP7,IP7,IP8,ICBD
C     ------------------------------------------------------------------
C     CALCULATE MARKET
C     ------------------------------------------------------------------
      QQ=RHO*TPHP90/2.
      CBD=ICBD
      DS=ALAMDA*ICBD
      SMSA=SMSA/2.
      BASVRT=0.0
C     ------------------------------------------------------------------
C     BEGIN CYCLING
C     ------------------------------------------------------------------
  100 DO 200 K=1,5
      DO 200 N=1,5
  105 CYCLE=0.
      TKT(K)=TKTI
      CKS(K)=CKSI
  110 CALL STAB
      IF (G-.95) 111,111,197
  111 QS=QQ*(1-G)/N
      CALL TIME
      CALL COST
      CYCLE=CYCLE+1.
```

```
BA5=TA5 (K)
BA25=TA25
BS5=TS5 (K)
BS25=TS25
BA6=TA6
BA26=TA26 (K)
BS6=TS6 (K)
BS26=TS26
BA7=TA7
BA27=TA27
BS7=TS7
BS27=TS27
BA8=TA8
BS8=TS8 (K)
BAHN=AHN
BAH1=AH1
BAH2=AH2
BAH3=AH3
BAH4=AH4
BAH5=AH5
BCRN=CRN
BCR1=CR1
BCR2=CR2
BCR3=CR3
BCR4=CR4
BCR5=CR5
BAPN=APN
BAP1=AP1
BAP2=AP2
BAP3=AP3
BAP4=AP4
BAP5=AP5
BACN=ACN
BAC1=AC1
BAC2=AC2
BAC3=AC3
BAC4=AC4
BAC5=AC5
BATN=ATN
BAT1=AT1
BAT2=AT2
BAT3=AT3
BAT4=AT4
BAT5=AT5
BTTLDN=TTLDN
BTTLD1=TTLD1
BTTLD2=TTLD2
BTTLD3=TTLD3
BTTLD4=TTLD4
BTTLD5=TTLD5
BTTLIN=TTLIN
BTTLI1=TTLI1
BTTLI2=TTLI2
BTTLI3=TTLI3
BTTLI4=TTLI4
BTTLI5=TTLI5
BSATN=SATN
BSAT1=SAT1
BSAT2=SAT2
BSAT3=SAT3
```

```
      IF (CYCLE-LIMIT) 110,110,300
C     ------------------------------------------------------------------
C     LIMIT IS THE NUMBER OF ITERATIONS PERFORMED.  EXPERIENCE HAS SHOWN
C     CONVERGENCE TO FOUR DECIMAL PLACES CONSISTANTLY WITH LIMIT  =  5
C     ------------------------------------------------------------------
  300 CONTINUE
C     ------------------------------------------------------------------
C     CALCULATE VALUE
C     ------------------------------------------------------------------
      VAL(K)=CO*(TNN-(G*AIT(K)+(1.-G)*SIT(K)))/60.+DNS-(G*DIC(K)+(1.-G)*
     XSIC(K))
      GAIN(K)=TP*QQ*VAL(K)/4000
      VRT(K)=GAIN(K)/(CDIF(K)*CRF)
C     ------------------------------------------------------------------
C     CHOOSE BEST VALUES
C     ------------------------------------------------------------------
      IF (VAL(K).LE.0.0.AND.IOPT.EQ.0) GO TO 197
  302 BASE=ABS(VRT(K))
      IF (BASE.LE.BASVRT.AND.IOPT.EQ.0) GO TO 197
C     ------------------------------------------------------------------
C     SET UP DUMMY VARIABLES TO STORE BEST VALUES
C     ------------------------------------------------------------------
  303 BESVRT=VRT(K)
      BASVRT=BASE
      BK=K
      BN=N
      BG=G
      BTNN=TNN
      BAIR=TAIR(K)
      BAIT=AIT(K)
      BSIT=SIT(K)
      BTKT=TKT(K)
      BDNS=DNS
      BDIC=DIC(K)
      BSIC=SIC(K)
      BCKS=CKS(K)
      BVAL=VAL(K)
      BDIF=CDIF(K)
      BGAIN=GAIN(K)
       BCKD=CKD(K)
      BAONE=TAONE(K)
      BATWO=TATWO(K)
      BSONE=TSONE(K)
      BSTWO=TSTWO(K)
      BA1=TA1
      BA21=TA21
      BS1=TS1
      BS21=TS21
      BA2=TA2(K)
      BA22=TA22
      BS2=TS2
      BS22=TS22(K)
      BA3=TA3(K)
      BA23=TA23
      BS3=TS3(K)
      BS23=TS23(K)
      BA4=TA4
      BA24=TA24
      BS4=TS4(K)
      BS24=TS24(K)
```

```
      BSAT4=SAT4
      BSAT5=SAT5
      BSYSDN=CSYSDN
      BSYSD1=CSYSD1
      BSYSD2=CSYSD2
      BSYSD3=CSYSD3
      BSYSD4=CSYSD4
      BSYSD5=CSYSD5
      BSYSIN=CSYSIN
      BSYSI1=CSYSI1
      BSYSI2=CSYSI2
      BSYSI3=CSYSI3
      BSYSI4=CSYSI4
      BSYSI5=CSYSI5
      BSTS=CRF*CDIF(K) +BSYSIN
  197 CONTINUE
      IF (IOPT.EQ.0.AND.K.NE.5) GO TO 199
      IF (IOPT.EQ.0.AND.N.NE.5) GO TO 199
  198 CONTINUE
C     ------------------------------------------------------------------
C     OUTPUT INDIVIDUAL CITY RESULTS
C     ------------------------------------------------------------------
      WRITE (6,501)
      WRITE(6,44)
      WRITE (6,4)   (HUB(J),J=1,20),TPHP70,TPHP90,QQ
      WRITE (6,2) SMSA,DS,ESTL70
      WRITE (6,660)
      WRITE (6,240) BTNN
      WRITE (6,270)
      WRITE (6,680)
      WRITE (6,670)
      WRITE (6,210) BA1,BA21,BS1,BS21,BA2,BA22,BS2,BS22,BA3,BA23,BS3,BS2
     X3,BA4,BA24,BS4,BS24,BA5,BA25,BS5,BS25,BA6,BA26,BS6,BS26,BA7,BA27,B
     XS7,BS27
      WRITE (6,220) BA8,BS8
      WRITE (6,280)
      WRITE (6,250) BAONE,BATWO,BSONE,BSTWO
      WRITE (6,260) BAIR,BTKT
      WRITE (6,650)
      WRITE (6,600) DNS
      WRITE (6,720)
      WRITE (6,710)
      WRITE (6,711)BAHN,BAH1,BAH2,BAH3,BAH4,BAH5
      WRITE (6,712) BCRN,BCR1,BCR2,BCR3,BCR4,BCR5
      WRITE (6,713)BAPN,BAP1,BAP2,BAP3,BAP4,BAP5
      WRITE (6,714) BACN,BAC1,BAC2,BAC3,BAC4,BAC5
      WRITE (6,721) BATN,BAT1,BAT2,BAT3,BAT4,BAT5
      WRITE (6,715) BTTLDN,BTTLD1,BTTLD2,BTTLD3,BTTLD4,BTTLD5
      WRITE (6,716) BTTLIN,BTTLI1,BTTLI2,BTTLI3,BTTLI4,BTTLI5
      WRITE (6,717) BSATN,BSAT1,BSAT2,BSAT3,BSAT4,BSAT5
      WRITE (6,718) BSYSDN,BSYSD1,BSYSD2,BSYSD3,BSYSD4,BSYSD5
      WRITE (6,719) BSYSIN,BSYSI1,BSYSI2,BSYSI3,BSYSI4,BSYSI5
      WRITE (6,630) BDIC,BSIC
      WRITE (6,610) BCKD,BCKS
      WRITE (6,44)
      WRITE (6,180) BK,BN,BG,BAIT,BSIT,BESVRT
      WRITE (6,190) BSYSIN,BDIF,BVAL
      WRITE (6,44)
  199 CONTINUE
  200 CONTINUE
```

```
      IF (IOPT.NE.0) GO TO 399
      IF(BASVRT-1.00)666,666,222
  222 CGAIN=CGAIN+BGAIN
      CSTS=CSTS+BSTS
      GO TO 667
  666 CSTS=CSTS+BSYSIN
  667 CNS=CNS+BSYSIN
  399 CITIES=CITIES+1
  800 CONTINUE
      IF (IOPT.NE.0) GO TO 810
      DIFER=CSTS-CNS
C     ------------------------------------------------------------------
C     OUTPUT SUMMARY OF RESULTS
C     ------------------------------------------------------------------
      WRITE (6,501)
      WRITE(6,601)
      WRITE(6,602)CITIES,CGAIN,DIFER,CSTS,CNS
  810 CONTINUE
    2 FORMAT (15X,13HSERVICE AREA=,F7.2,5X,24HCBD TO AIRPORT DISTANCE=,
     XF5.2,5X,27HACCESS HIGHWAY LANES, 1970=,F3.1//)
    3 FORMAT (2X,10F12.4/)
    4 FORMAT (12X,20A1,5X,33HPEAK HOURLY PASSENGERS  --  1970=,F7.2,5X,
     X5H1990=, F7.1, 5X
     X21HAIRPORT ACCESS TRIPS=,F8.2)
    5 FORMAT (2X,9F12.4/)
    6 FORMAT (2X,8F12.4/)
 10   FORMAT (8F10.5)
 12   FORMAT (5F10.5)
   14 FORMAT (20I3)
   15 FORMAT (7X,10(I3,9X),3X/)
   16 FORMAT (8X,6HOPTION,7X,2HLA,   9X,5HLIMIT,  8X,2HLS,  8X,5HNCITY,
     X  9X,2HND,  10X,2HNL)
   17 FORMAT (8I10)
   22 FORMAT (8X,I3,3X,9F12.4)
   33 FORMAT(20A1,F11.2,3F10.2)
   44 FORMAT (20X,80H*****************************************************
     X*****************************//)
   88 FORMAT(I4,F7.3,3I4)
  180 FORMAT (1X,2HK=,F2.0,4X,2HN=,F2.0,   4X,2HG=F4.2,4X,  19HDIRECT AC
     XCESS TIME=,F6.2,    4X,22HSATELLITE ACCESS TIME=,  F6.2,4X,
     X 22HBENEFIT TO COST RATIO=,F8.1/)
  190 FORMAT (4X,21HCAPITAL COST, NO STS=,F10.4,4X,24HADDITIONAL COST FO
     XR STS=,F8.2,4X,  23HUSER COST DIFFERENTIAL=,F6.2//)
  210  FORMAT(13X,4F20.4)
  220  FORMAT(13X,F20.4,20X,F20.4)
  231 FORMAT (56X,4HDATA/)
  232 FORMAT (///52X,11HEND OF DATA//)
  240 FORMAT (42X,28HTIME IMPEDANCE WITHOUT STS =,F9.4/)
  250 FORMAT (3X,10HIMPEDANCES,4F20.4/)
  260 FORMAT (24X,21HTIME IMPEDANCE RATIOS,11X,7HDIRECT:,F7.4,10X,
     X8HVIA STS:,F7.4/)
  270 FORMAT (47X,25HTIME IMPEDANCE COMPONENTS)
  280 FORMAT (26X,7H-------,13X,7H-------,13X,7H-------,13X,7H-------)
  400 FORMAT (9X,3HALC,8X,6HALPHA1,6X,6HALPHA2,6X,6HALPHA3,6X,6HALPHA4,
     X6X,6HALPHA5,6X,6HALPHA6,6X,6HALPHA7,6X,6HALPHA8,6X,6HALPHA9)
  410 FORMAT (9X,3HALT,9X,2HB1,10X,2HB2,10X,2HB3,10X,2HB4,10X,2HB5,
     X10X,2HB6,10X,2HB7,10X,2HB8,10X,2HB9)
  420 FORMAT (8X,6HALPHBE,8X,2HEB,9X,3HECA,9X,3HECS,9X,3HEAC,9X,3HRHO,
     X9X,4HRHOS,8X,3HUPA,9X,3HUPS,8X,2HUA)
  430 FORMAT (9X,2HUS,10X,3HT1A,9X,3HT2A,9X,3HT3A,9X,3HT4A,    9X,3HT1S,
```

```
   X9X,3HT2S,     9X,3HT3S,9X,3HT4S,9X,3HCRF)
440 FORMAT (10X,1HA,10X,2HAC,10X,2HCA,10X,3HCAR,9X,2HCB,10X,2HCC,
   X10X,2HCG,10X,4HCKSI,8X,2HCL,10X,3HCLA)
450 FORMAT (9X,5HCLIMO,7X,3HCLM,9X,3HCLS,9X,4HCLSS,8X,
   X3HCPA,10X,3HCPS,9X,2HCR,10X,3HCSA,9X,3HCSS,8X,3HCV1)
460 FORMAT (8X,3HCV2,9X,3HCV3,9X,3HCV4,9X,3HCV5,9X,3HCW3,9X,3HCW4,
   X9X,3HCW5,10X,3HDAC,9X,4HDMAX,8X,4HDPMS)
470 FORMAT (9X,3HDRS,9X,3HDSS,9X,3HDWA,9X,3HDWS,8X,4HDBAR,10X,2HML,10X
   X,2HQV,9X,3HQAA,10X,2HRB,10X,2HRP)
480 FORMAT (9X,2HTB,10X,2HTC,10X,3HTCA,9X,3HTCS,9X,4HTDUR,8X,
   X4HTKTI,9X,3HTL1,9X,3HTL2,9X,3HTL3,9X,3HTL4)
490 FORMAT (10X,3HTL5,8X,2HTP,10X,3HTPZ,9X,2HVA,10X,3HVAC,9X,2HVD,
   X10X,2HXA,10X,2HXS)
501 FORMAT (1H1)
510 FORMAT (8X,6HQSV(1),6X,6HQSV(2),6X,6HQSV(3),6X,6HQSV(4),6X,6HQSV(5
   X),7X,5HVS(1),7X,5HVS(2),7X,5HVS(3),7X,5HVS(4),7X,5HVS(5))
520 FORMAT (10X,1HK, 9X,6HZEP(K),6X,6HZIP(K),6X,6HZOP(K),6X,
   X6HZUP(K),6X,6HZAT(K),8X,3HZEB,9X,3HZEC, 7X,6HZEF(K),8X,3HZEG)
600 FORMAT (42X,28HCOST IMPEDANCE WITHOUT STS =,F9.4/)
601 FORMAT (30X,58HTOTAL PROGRAM SUMMARY--OFF AIRPORT TERMINALS--($-MI
   XLLIONS)/)
602 FORMAT (30X,28HNUMBER OF CITIES INCLUDED  =,F4.0/30X,28HTOTAL NET
   XBENEFITS          =,F9.2,10H$ PER YEAR/30X,28HADDED COSTS OF STS PR
   XOGRAM =,  F9.2,10H$ PER YEAR//35X,  18HSTS SYSTEM COSTS =,F9.2,
   X  1H$/35X,18HCOST WITH NO STS =,  F9.2,1H$/)
603 FORMAT (//////////////////////////)
610 FORMAT (26X,34HCOST IMPEDANCE RATIOS:     DIRECT=,F7.4,
   X12X,8HVIA STS=,F7.4/)
630 FORMAT(/26X,34HCOST IMPEDANCE WITH STS:   DIRECT=,F7.4,12X,
   X8HVIA STS=,F7.4)
650 FORMAT (20X,80H*****************************COST IMPEDANCE SUMMARY*
   X****************************/)
660 FORMAT (20X,80H*******************************TIME IMPEDANCE SUMMARY
   X****************************/)
670 FORMAT (29X,2HTO,17X,4HFROM,17X,2HTO,17X,4HFROM)
680 FORMAT (35X,6HDIRECT,35X,7HVIA STS)
709 FORMAT (30X,53HTHIS IS A HYPOTHETICAL EXAMPLE FOR MODEL TESTING ON
   XLY///)
710 FORMAT (15X,9HCOMPONENT,24X,6HNO STS,5X,4HSTS1,6X,4HSTS2,6X,4HSTS3
   X,6X,4HSTS4,  6X, 4HSTS5)
711 FORMAT (15X,14HACCESS HIGHWAY,16X,6F10.4)
712 FORMAT (15X,19HCIRCULATION ROADWAY,11X,6F10.4)
713 FORMAT (15X,19HAIRPORT PARKING LOT,11X,6F10.4)
714 FORMAT (15X,19HAIRPORT CURB SPACES,11X,6F10.4)
715 FORMAT (15X,23HTOTAL DOMESTIC TERMINAL,7X,6F10.4)
716 FORMAT (15X, 28HTOTAL INTERNATIONAL TERMINAL,2X,6F10.4)
717 FORMAT (15X,21HCOST PER STS TERMINAL,9X,6F10.4)
718 FORMAT (15X,21HTOTAL DOMESTIC SYSTEM,9X,6F10.4)
719 FORMAT (15X,26HTOTAL INTERNATIONAL SYSTEM,4X,6F10.4)
720 FORMAT (49X,23HCAPITAL COST COMPONENTS)
721 FORMAT (15X,16HAIRPORT TERMINAL,14X,6F10.4)
    STOP
    END

    SUBROUTINE STAB
C   ------------------------------------------------------------------
C   A PROGRAM TO CALCULATE G AND GAMMA
C   ------------------------------------------------------------------
    COMMON ALC,ALPHA1,ALPHA2,ALPHA3,ALPHA4,ALPHA5,ALPHA6,ALPHBE,ALT,
   XEAC,RHO,RHCS,T1A,T2A,T3A,T4A,T1S,T2S,T3S,T4S,UA,UPA,UPS,
```

```
      XUS,A,AEP7,AIT(5),B1,B2,B3,B4,B5,B6,CA,CAR,CB,CDIF(5),CG,CKD(5),
      XCKS(5),CL,CLIMO,CLS,CPA,CPK,CPS,CRF,CSA,CSS,DA,DAC,DBAR,DD,DIC(5),
      XDMAX,DNS,DPMA,DR,DRS,DS,DSS,DWA,DWS,ESTL70,G,GAMMA,HUB(20),ICBD,
      XIP7,IP8,K,ML,N,NGAT7,QAA,QQ,QS,QSV(5),QV,RB,RP,SIC(5),SIT(5),SMSA,
      XT7,TAIR(5),TB,TC,TCS,TDUR,TKT(5),TNN,TPHP70,TPHP90,VA,VAC,VD,VS(5)
      X,XA,XS,ZAT,ZEB,ZEC,ZEF(5),ZEG,ZEP(5),ZIP(5),ZOP(5),ZUP(5)
      X,ALPHA7,ALPHA8,ALPHA9,B7,B8,B9,DPMS,RNOSAT
      X,TP,CYCLE,LIMIT
       COMMON          TS3(5),                TS5(5),TS6(5),TS8(5),TS22(5)
      X          ,TS23(5),          TS24(5),TSONE(5),TSTWO(5),TS4(5),
      X           TAONE(5),TATWO(5),TA2(5),TA3(5),TA5(5),TA26(5),TS2,
      XTA1,TA21,TS1,TS21,TA22,TA23,TA4,TA24,TA25,TS25,TA6,TS26,TA7,TA27,
      XTS7,TS27,TA8,AHN,AH1,AH2,AH3,AH4,AH5,CRN,CR1,CR2,CR3,CR4,CR5,APN,
      XAP1,AP2,AP3,AP4,AP5,ACN,AC1,AC2,AC3,AC4,AC5,ATN,AT1,AT2,AT3,AT4,
      XAT5,TTLDN,TTLD1,TTLD2,TTLD3,TTLD4,TTLD5,TTLIN,TTLI1,TTLI2,TTLI3,
      XTTLI4,TTLI5,SATN,SAT1,SAT2,SAT3,SAT4,SAT5,CSYSDN,CSYSD1,CSYSD2,
      XCSYSD3,CSYSD4,CSYSD5,CSYSIN,CSYSI1,CSYSI2,CSYSI3,CSYSI4,CSYSI5
      X                                   ,AC,AS,CAA,CC,CLA,CLM,CLSS,CR
      X,CV1,CV2,CV3,CV4,CV5,CW3,CW4,CW5,EB,Q2A,Q3A,Q4A,Q2S,Q3S,Q4S,TCA,
      X     TL1,TL2,TL3,TL4,TL5,TPZ,      LA,       LS,NCITY,ND,NL,TSC
       REAL ML
       GAMMA=1.-1./(1.+A*(TKT(K)**ALT)*(CKS(K)**ALC))
       G=(1.+GAMMA*N)/(N+1.)
       RETURN
       END

       SUBROUTINE TIME
       ------------------------------------------------------------------
       A PROGRAM TO EVALUATE SATELLITE TERMINAL SYSTEM TIME IMPEDANCES
       COMMON ALC,ALPHA1,ALPHA2,ALPHA3,ALPHA4,ALPHA5,ALPHA6,ALPHBE,ALT,
      XEAC,RHO,RHOS,T1A,T2A,T3A,T4A,T1S,T2S,T3S,T4S,UA,UPA,UPS,
      XUS,A,AEP7,AIT(5),B1,B2,B3,B4,B5,B6,CA,CAR,CB,CDIF(5),CG,CKD(5),
      XCKS(5),CL,CLIMO,CLS,CPA,CPK,CPS,CRF,CSA,CSS,DA,DAC,DBAR,DD,DIC(5),
      XDMAX,DNS,DPMA,DR,DRS,DS,DSS,DWA,DWS,ESTL70,G,GAMMA,HUB(20),ICBD,
      XIP7,IP8,K,ML,N,NGAT7,QAA,QQ,QS,QSV(5),QV,RB,RP,SIC(5),SIT(5),SMSA,
      XT7,TAIR(5),TB,TC,TCS,TDUR,TKT(5),TNN,TPHP70,TPHP90,VA,VAC,VD,VS(5)
      X,XA,XS,ZAT,ZEB,ZEC,ZEF(5),ZEG,ZEP(5),ZIP(5),ZOP(5),ZUP(5)
      X,ALPHA7,ALPHA8,ALPHA9,B7,B8,B9,DPMS,RNOSAT
      X,TP,CYCLE,LIMIT
       COMMON          TS3(5),                TS5(5),TS6(5),TS8(5),TS22(5)
      X          ,TS23(5),          TS24(5),TSONE(5),TSTWO(5),TS4(5),
      X           TAONE(5),TATWO(5),TA2(5),TA3(5),TA5(5),TA26(5),TS2,
      XTA1,TA21,TS1,TS21,TA22,TA23,TA4,TA24,TA25,TS25,TA6,TS26,TA7,TA27,
      XTS7,TS27,TA8,AHN,AH1,AH2,AH3,AH4,AH5,CRN,CR1,CR2,CR3,CR4,CR5,APN,
      XAP1,AP2,AP3,AP4,AP5,ACN,AC1,AC2,AC3,AC4,AC5,ATN,AT1,AT2,AT3,AT4,
      XAT5,TTLDN,TTLD1,TTLD2,TTLD3,TTLD4,TTLD5,TTLIN,TTLI1,TTLI2,TTLI3,
      XTTLI4,TTLI5,SATN,SAT1,SAT2,SAT3,SAT4,SAT5,CSYSDN,CSYSD1,CSYSD2,
      XCSYSD3,CSYSD4,CSYSD5,CSYSIN,CSYSI1,CSYSI2,CSYSI3,CSYSI4,CSYSI5
      X                                   ,AC,AS,CAA,CC,CLA,CLM,CLSS,CR
      X,CV1,CV2,CV3,CV4,CV5,CW3,CW4,CW5,EB,Q2A,Q3A,Q4A,Q2S,Q3S,Q4S,TCA,
      X     TL1,TL2,TL3,TL4,TL5,TPZ,      LA,       LS,NCITY,ND,NL
       DIMENSION Q(5),TAT(5),TSM(5),TWC(5)
       REAL ML
       XN=N
C      ------------------------------------------------------------------
C      INITIALIZE VALUES
C      ------------------------------------------------------------------
       IF(K-4) 10,11,11
   10  Q(K)=QQ
       GO TO 12
```

```
   11 Q(K)=QQ*G
  12  CONTINUE
C     ------------------------------------------------------------------
C     PATH ONE  TAONE  TO THE AIRPORT, DIRECT
C     ------------------------------------------------------------------
      DA=2*SQRT(G*SMSA/3.14159)/3.
      RNOSAT=2*SQRT(SMSA/3.14159)/3.
      TA1=60*DA/VA
      ZOT=CA*EAC/Q(K)
 100  DAC1=AMIN1(1.0,ZOT)
 101  ZAP=(B1+ZEP(K))**ALPHA1
      DAC2=AMAX1(1.0,ZAP)
      TA2(K)=60*((DAC/(VAC*DAC1))+DAC2/CA)
      AZAP=(B2+ZIP(K))**ALPHA2
      TPKA=(60/UA)*AMAX1(1.0,AZAP)+1.0+.00208*(XA+DR)+.0048*DWA+
     C.00278*DPMA
      ZA=(B3+ZOP(K))**ALPHA3
      TCTA=TC*AMAX1(1.0,ZA)
      TA3(K)=T1A*TPKA+(1-T1A)*TCTA
      TA4=.00238*(DBAR+DMAX)
  80  ZAA=(B4+ZUP(K))**ALPHA4
      TA5(K)=AMAX1(1.,ZAA)/UPA
      TA6=5+.3*DA
      TA7=1/(ML*CL)
      TA8=(2.+QV)/(2.*CG)
      TAONE(K)=TA1+TA2(K)+TA3(K)+TA4+TA5(K)+TA6+TA7+TA8
C     ------------------------------------------------------------------
C     PATH TWO    TATWO    FROM THE AIRPORT, DIRECT
C     ------------------------------------------------------------------
      TA21=QV/(4.*ML*CL)
      TA22=QV*(.5*(1/RB-1/RP)+RB/(6*RP**2))*ALPHBE
      TA23=TA4
      TA24=.00238*T1A*DWA
      ALPHAB=T2A/(T2A+T3A+T4A)
      TCWA=.5*TB*ALPHAB+TC*(1-ALPHAB)
      TA25=TPKA*T1A+TCWA*(1.-T1A)
      TA26(K)=TA2(K)
      TA27=TA1
      TATWO(K)=TA21+TA22+TA23+TA24+TA25+TA26(K)+TA27
C     ------------------------------------------------------------------
C     PATH THREE    TSONE    TO THE AIRPORT VIA STS
C     ------------------------------------------------------------------
      DD=2*SQRT((1.-G)*SMSA/(N*3.14159))/3.
      TS1=60*DD/VD
      ZAB=(B7+ZAT)**ALPHA7
      TPKS=60/US*AMAX1(1.0,ZAB)+1.0+.00208*XS+.0048*DWS+.00278*DPMS
      ZB=(B8+ZEB)**ALPHA8
      TCTS=TC*AMAX1(1.0,ZB)
      TS2  = T1S*TPKS+(1-T1S)*TCTS
      TS3(1)=0.0
      TS3(2)=0.0
      TS3(3)=0.0
      ZC=(B9+ZEC)**ALPHA9
      TS3(4)=AMAX1(1.0,ZC)/UPS
      TS3(5)=TS3(4)
      TSW=5+0.3*DD
      ZD=30*QSV(K)/QS
      ZE=QSV(K)/CLS
      TSL=AMAX1(ZD,ZE)
      IF(K-3)132,132,133
```

```
 132 TSM(K)=60.*DS/VS(K)+TA2(K)
     GO TO 134
 133 TSM(K)=60.*DS/VS(K)
 134 TAT(1)=TCTA+TA4
     TAT(2)=TAT(1)
     TAT(3)=TAT(1)
     TAT(5)=0.0
     DWS=DMAX-DBAR
     TAT(4)=0.5*QSV(4)/CLS+DWS/210
     TS4(K)=TSW+TSL+TSM(K)+TAT(K)
     ZF=(B5+ZEF(K))**ALPHA5
     TS5(1)=AMAX1(1.,ZF)/UPS
     TS5(2)=TS5(1)
     TS5(3)=TS5(1)
     TS5(4)=0.0
     TS5(5)=0.0
     TS6(K)=3*(6-K)
     TS7=TA7
     TS8(5)=2.0
     DO 160 I=1,4
 160 TS8(I)=TA8
     TSONE(K)=TS1+TS2   +TS3(K)+TS4(K)+TS5(K)+TS6(K)+TS7+TS8(K)
C    ------------------------------------------------------------------
C    PATH FOUR   TSTWO   FROM THE AIRPORT VIA STS
C    ------------------------------------------------------------------
     TS21=TA21
     TS22(5)=0.0
     DO 165 I=1,4
 165 TS22(I)=TA22
     TS23(4)=(DMAX-DBAR)*.00238
     TS23(5)=0.0
     DO 170 I=1,3
 170 TS23(I)=TA23
     TWC(K)=TS6(K)
     TST=TSL+DSS/210.
     TS24(K)=TWC(K)+TSL+TSM(K)+TST
     TS25=QV*(1-G)*ALPHBE/(2*N*CB)
     ZG=(B6+ZEG)**ALPHA6
     TRS=(60/US)*AMAX1(1.,ZG)+1.+.00208*(XS+DRS)+.0048*DWS+.00278*
    CDPMS
     ABS=T2S/(T2S+T3S+T4S)
     TCWS=(TB*ABS)/2+TC*(1-ABS)
     TS26=TRS*T1S+TCWS*(1-T1S)
     TS27=60*DD/VD
     TSTWO(K)=TS21+TS22(K)+TS23(K)+TS24(K)+TS25+TS26+TS27
C    ------------------------------------------------------------------
C    COMPUTE IMPEDANCE FOR THE SYSTEM WITH STS
C    ------------------------------------------------------------------
     AIT(K)=0.50*(TAONE(K)+TATWO(K))
     SIT(K)=0.50*(TSONE(K)+TSTWO(K))
C    ------------------------------------------------------------------
C    COMPUTE IMPEDANCE FOR THE NO SATELLITE CASE
C    ------------------------------------------------------------------
C*******************************************************************
C    ALTHOUGH THIS IS NOT DOCUMENTED IN REFERENCE 1 (SNELL, J.E, "A FIRST
C    APPROXIMATION SATELLITE TERMINAL SYSTEM EVALUATION MODEL," REPORT
C    FAA-AV-71-1, MARCH, 1971), REFERENCE TO PAGES 45 THROUGH 63 WILL
C    SHOW THE UNDERLYING LOGIC.  THE FOLLOWING EXPLAINS EACH COMPONENT:
C-------------------------------------------------------------------
C         TIME IMPEDANCE TO THE AIRPORT: TN1
```

```
C                ACCESS TO THE AIRPORT   60*RNOSAT/VA
C                AIRPORT CIRCULATION  DAC/(VAC*DNN1)+DN23/CA
C                CURB TRANSFER OR PARKING TIME  T1A*TP3+(1-T1A)*DN22
C                AIRPORT WALKING TIME   TA4
C                AIRPORT PROCESSING TIME  AMAX1(1.,SN5)/UPA
C                AIRCRAFT LOADING TIME  TA7
C                PREDEPARTURE INGRESSION LOSS  TA8
C-----------------------------------------------------------------------
C          TIME IMPEDANCE FROM THE AIRPORT: TN2
C                AIRCRAFT UNLOADING TIME  TA21
C                BAGGAGE CLAIM TIME  TA22
C                AIRPORT WALKING TIME  TA4
C                TRANSFER TIME TO PARKING OR CURB LOADING  TA24
C                TIME TO RECOVER AUTO OR CURB WAITING  T1A*TP3+(1-T1A)*TCWA
C                AIRPORT CIRCULATION  DAC/(VAC*DNN1)+DN23/CA
C                DESTINATION ACCESS TIME 60*RNOSAT/VA
C***********************************************************************
      DN1=CA*EAC/QQ
      DNN1=AMIN1(1.,DN1)
      DN3P=(B2+ZIP(1))**ALPHA2
       TP3=(60/UA)*AMAX1(1.0,DN3P)+1.0+.00208*(XA+DR)+.0048*DWA+
     C.00278*DPMA
      DN2=(B3+ZOP(1))**ALPHA3
      DN22=TC*AMAX1(1.,DN2)
      DN4=(B1+ZEP(1))**ALPHA1
      DN23=AMAX1(1.0,DN4)
      DN5=(B4+ZUP(1))**ALPHA4
      TN1=60.*RNOSAT/VA+60.*((DAC/(VAC*DNN1))+DN23/CA)+T1A*TP3+(1.-T1A)*
     XDN22+TA4+AMAX1(1.,DN5)/UPA+5.+.3*RNOSAT+TA7+TA8
      TN2=TA21+TA22+TA4+TA24+T1A*TP3+(1.-T1A)*TCWA+60.*((DAC/(VAC*DNN1))
     X+DN23/CA)+60.*RNOSAT/VA
      TNN=(TN1+TN2)/2.
C     ------------------------------------------------------------------
C     COMPUTE IMPEDANCE RATIOS
C     ------------------------------------------------------------------
      TAIR(K)=TNN/AIT(K)
      TKT(K)=TNN/SIT(K)
 1000 CONTINUE
      RETURN
      END

      SUBROUTINE COST
C     ------------------------------------------------------------------
C     A PROGRAM TO EVALUATE SATELLITE TERMINAL SYSTEM COST IMPEDANCES
C     ------------------------------------------------------------------
      COMMON ALC,ALPHA1,ALPHA2,ALPHA3,ALPHA4,ALPHA5,ALPHA6,ALPHBE,ALT,
     XEAC,RHO,RHOS,T1A,T2A,T3A,T4A,T1S,T2S,T3S,T4S,UA,UPA,UPS,
     XUS,A,AEP7,AIT(5),B1,B2,B3,B4,B5,B6,CA,CAR,CB,CDIF(5),CG,CKD(5),
     XCKS(5),CL,CLIMO,CLS,CPA,CPK,CPS,CRF,CSA,CSS,DA,DAC,DBAR,DD,DIC(5),
     XDMAX,DNS,DPMA,DR,DRS,DS,DSS,DWA,DWS,ESTL70,G,GAMMA,HUB(20),ICBD,
     XIP7,IP8,K,ML,N,NGAT7,QAA,QQ,QS,QSV(5),QV,RB,RP,SIC(5),SIT(5),SMSA,
     XT7,TAIR(5),TB,TC,TCS,TDUR,TKT(5),TNN,TPHP70,TPHP90,VA,VAC,VD,VS(5)
     X,XA,XS,ZAT,ZEB,ZEC,ZEF(5),ZEG,ZEP(5),ZIP(5),ZOP(5),ZUP(5)
     X,ALPHA7,ALPHA8,ALPHA9,B7,B8,B9,DPMS,RNOSAT
     X,TP,CYCLE,LIMIT
      COMMON          TS3(5),                TS5(5),TS6(5),TS8(5),TS22(5)
     X          ,TS23(5),          TS24(5),TSONE(5),TSTWO(5),TS4(5),
     X           TAONE(5),TATWO(5),TA2(5),TA3(5),TA5(5),TA26(5),TS2,
     XTA1,TA21,TS1,TS21,TA22,TA23,TA4,TA24,TA25,TS25,TA6,TS26,TA7,TA27,
     XTS7,TS27,TA8,AHN,AH1,AH2,AH3,AH4,AH5,CRN,CR1,CR2,CR3,CR4,CR5,APN,
```

```
      XAP1,AP2,AP3,AP4,AP5,ACN,AC1,AC2,AC3,AC4,AC5,ATN,AT1,AT2,AT3,AT4,
      XAT5,TTLDN,TTLD1,TTLD2,TTLD3,TTLD4,TTLD5,TTLIN,TTLI1,TTLI2,TTLI3,
      XTTLI4,TTLI5,SATN,SAT1,SAT2,SAT3,SAT4,SAT5,CSYSDN,CSYSD1,CSYSD2,
      XCSYSD3,CSYSD4,CSYSD5,CSYSIN,CSYSI1,CSYSI2,CSYSI3,CSYSI4,CSYSI5
      X                                        ,AC,AS,CAA,CC,CLA,CLM,CLSS,CR
      X,CV1,CV2,CV3,CV4,CV5,CW3,CW4,CW5,EB,Q2A,Q3A,Q4A,Q2S,Q3S,Q4S,TCA,
      X     TL1,TL2,TL3,TL4,TL5,TPZ,      LA,       LS,NCITY,ND,NL, TSC
       REAL ML
       XN=N
C      ------------------------------------------------------------------
C      AIRPORT COST FOR THIS N, NUMBER OF SATELLITES
C      ------------------------------------------------------------------
C      ------------------------------------------------------------------
C      COMPUTE GATE 90
C      ------------------------------------------------------------------
       AEP9=6.*AEP7
       AOP7=IP7
       AOP8=IP8
       GATE7=NGAT7
       AOP9=1.5*AOP8
        GATE9=(6.*(GATE7-2.)+2.)*AOP9*AEP7/(AOP7*AEP9)
       GATES=GATE9-GATE7
C      ------------------------------------------------------------------
C      COMPUTE BASIC FLOWS
C      ------------------------------------------------------------------
       Q=QQ
       QA=Q*G
       DTP=TPHP90-TPHP70
       DQ=RHO*(TPHP90-TPHP70)/2.
       DQV=DQ/EAC
       DQA=G*DQ
       DQAV=G*DQV
       DQS=((1.-G)/XN)*DQ
       DQSV1=DQS/QSV(1)
       DQSV2=DQS/QSV(2)
       DQSV3=DQS/QSV(3)
       DQSV4=DQS/QSV(4)
       DQSV5=DQS/QSV(5)
C      ------------------------------------------------------------------
C      ACCESS HIGHWAY COSTS
C      ------------------------------------------------------------------
       AHN=RNOSAT*((DQV/1800.)-.2*ESTL70)
      X*2*CLM
       AH1=DA*(((DQAV+XN*DQSV1)/1800.)-.2*ESTL70)
      X*2*CLM
       AH2=DA*(((DQAV+XN*DQSV2)/1800.)-.2*ESTL70)
      X*2*CLM
        AH3=DA*((DQAV/1800.)-.2*ESTL70)
      X*2*CLM
       AH4=AH3
       AH5=AH3
C      ------------------------------------------------------------------
C       AIRPORT PARKING - 1 TO 5 ARE SAME
C      ------------------------------------------------------------------
       PAN=(T1A*TDUR*AS/EB)*DQ
       PAW=PAN*G
       APN=.000001*PAN*(CLA/LA+1.25+1.07*LA)
       AP1=APN*G
       AP2=AP1
       AP3=AP1
```

```
      AP4=AP1
      AP5=AP1
C     ------------------------------------------------------------------
C     AIRPORT CURB COSTS
C     ------------------------------------------------------------------
      ECAI=T2A/Q2A+T3A/Q3A+T4A/Q4A
      ACA=ECAI*TCA*AC*DQ/60.
      ACN=.000001*ACA*CAA
      AC13=ECAI*TCA*AC*(DQAV+XN*DQSV1  )/60.
      AC1=.000001*AC13*CAA
      AC23=ECAI*TCA*AC*(DQAV+XN*DQSV2  )/60.
      AC2=.000001*AC23*CAA
      AC33=ECAI*TCA*AC*(DQAV+XN*DQSV3  )/60.
      AC3=.000001*AC33*CAA
      AC45=ECAI*TCA*AC*DQAV/60.
      AC4=.000001*AC45*CAA
      AC5=AC4
C     ------------------------------------------------------------------
C     CIRCULATION ROADWAY --- AREAS
C     ------------------------------------------------------------------
      AN=DQ* 146./RHO+ACA+PAN/NL +750.*GATES
      A1=DQ* 146./RHO+AC13+PAW/NL +750.*GATES
      A2=A1
      A3=DQ* (81.+65.*G)/RHO+AC13+PAW/NL +750.*GATES
      A4=DQ* (20.+126.*G)/RHO+AC45+PAW/NL +750.*GATES
      A5=DQ* G*(20.+146.*G)/RHO+AC45+PAW/NL +750.*GATES
C     ------------------------------------------------------------------
C     CIRCULATION ROADWAY -- COSTS
C     ------------------------------------------------------------------
      CRN=.000001*DQ*.153*SQRT(AN)*EAC
      CR1=.000001*DQ*.153*G*SQRT(A1)*EAC
      CR2=CR1
      CR3=.000001*DQ*.153*G*SQRT(A3)*EAC
      CR4=.000001*DQ*.153*G*SQRT(A4)*EAC
      CR5=.000001*DQ*.153*G*SQRT(A5)*EAC
C     ------------------------------------------------------------------
C     AIRPORT TERMINAL - DOMESTIC
C     ------------------------------------------------------------------
      ATN=.000001*(.5*CLA+CC)*(146.*DTP+1500.*GATES)
      AT1=ATN
      AT2=ATN
      AT3=.000001*(.5*CLA+CC)*((81.+65.*G)*DTP+1500.*GATES)
      AT4=.000001*(.5*CLA+CC)*((20.+126.*G)*DTP+1500.*GATES)
      AT5=G*ATN
      TTLDN=AHN+CRN+APN+ACN+ATN
      TTLD1=AH1+CR1+AP1+AC1+AT1
      TTLD2=AH2+CR2+AP2+AC2+AT2
      TTLD3=AH3+CR3+AP3+AC3+AT3
      TTLD4=AH4+CR4+AP4+AC4+AT4
      TTLD5=AH5+CR5+AP5+AC5+AT5
C     ------------------------------------------------------------------
C     AIRPORT TERMINAL - INTERNATIONAL
C     ------------------------------------------------------------------
      ADDI=(.5*CLA+CC)*73.*DTP*.000001
      TTLIN=TTLDN+ADDI
      TTLI1=TTLD1+ADDI
      TTLI2=TTLD2+ADDI
      TTLI3=TTLD3+ADDI
      TTLI4=TTLD4+ADDI*G
      TTLI5=TTLD5+ADDI*G
```

```
C     ------------------------------------------------------------------
C     SATELLITE SYSTEM COSTS PER TERMINAL
C     ------------------------------------------------------------------
      SATN=0.
      SAT1=.000001*(132.8+52.8*DS)*DQS
      SAT2=.000001*(21600.+(3685.+45.6*DS)*DQS)
      SAT3=.000001*(113374.+500000.*DS+(5057.5+77.7*DS)*DQS)
      SAT4=.000001*(44550.+4.*DQS**1.5+2000000.*DS+(8191.+340.*DS)*DQS)
      SAT5=.000001*(163800.+4.2*DQS**1.5+7000000.*DS+(8216.+109.5*DS)*DQ
     1S)
C     ------------------------------------------------------------------
C     TOTAL SYSTEM COSTS - ALL OPTIONS , THIS VALUE OF N
C     ------------------------------------------------------------------
      CSYSDN=TTLDN
      CSYSD1=TTLD1+SAT1*XN
      CSYSD2=TTLD2+SAT2*XN
      CSYSD3=TTLD3+SAT3*XN
      CSYSD4=TTLD4+SAT4*XN
      CSYSD5=TTLD5+SAT5*XN
      CSYSIN=TTLIN
      CSYSI1=TTLI1+SAT1*XN
      CSYSI2=TTLI2+SAT2*XN
      CSYSI3=TTLI3+SAT3*XN
      CSYSI4=TTLI4+SAT4*XN
      CSYSI5=TTLI5+SAT5*XN
      CDIF(1)=CSYSI1-CSYSIN
      CDIF(2)=CSYSI2-CSYSIN
      CDIF(3)=CSYSI3-CSYSIN
      CDIF(4)=CSYSI4-CSYSIN
      CDIF(5)=CSYSI5-CSYSIN
      CSTSN=0.
   80 CONTINUE
C     ------------------------------------------------------------------
C       COMPUTE COST IMPEDANCES
C       DIRECT ---- NO STS --- DNS
C     ------------------------------------------------------------------
      SEPAT=(CSYSIN-APN-AHN)*CRF/(ND*TP*Q)
      DNS=(RNOSAT*CAR+TDUR*CPK)*T1A+RNOSAT*CLIMO*(1.-T1A)+1000000.*SEPAT
      DNN=(DA*CAR+TDUR*CPK)*T1A+DA*CLIMO*(1.-T1A)
C     ------------------------------------------------------------------
C       DIRECT  WITH STS -----DIC(K)
C       SAME AS DNS FOR K=1,2,3
C     ------------------------------------------------------------------
      DIC(1)=DNN+1000000.*(TTLI1 -AP1-AH1)*CRF/(ND*TP*Q)
      DIC(2)=DNN+1000000.*(TTLI2 -AP2-AH2)*CRF/(ND*TP*Q)
      DIC(3)=DNN+1000000.*(TTLI3 -AP3-AH3)*CRF/(ND*TP*Q)
      DIC(4)=DNN+1000000.*(TTLI4 -AP4-AH4)*CRF/(ND*TP*QA)
      DIC(5)=DNN+1000000.*(TTLI5 -AP5-AH5)*CRF/(ND*TP*QA)
C     ------------------------------------------------------------------
C      VIA STS ----- SIC(K)
C     ------------------------------------------------------------------
      ECSI=T2S/Q2S+T3S/Q3S+T4S/Q4S
      CCS=AC*CAA*(1.15*CR *TSC *ECSI)/(ND*TPZ*.6*60.)
      PPKS=((CLSS/LS+1.25+1.07*LS)*AS*CR     +85.)*1.15/(2.5*ND*TDUR)
      XP   =  2.*(((CV1*CRF/ND)+10.*TPZ)*(DS/VS(1)+TL1)/TPZ+(.1+.005*
     XQSV(1))*DS)/QSV(1)
      SIC(1)= XP +.02    +1000000.*(TTLI1-AH1-AP1)*CRF/(250.*TP*Q)+
     1(DD*CAR+TDUR*CPK)*T1A+DD*CLIMO*(1-T1A)
      XVP=CV2*CRF/ND
      XP=.1+.005*QSV(2)
```

```
      XP=(2.*((XVP+10.*TPZ)*(DS/VS(2)+TL2)+DS*XF*TPZ)/QSV(2)
     X+720.*QSV(2)*CR/(ND*DQS))/TPZ
      SIC(2)=T1S*TDUR*PPKS/EB+(1.-T1S)*CCS+XP
     1+(DD*CAR+TDUR*CPK)*T1A+DD*CLIMO*(1.-T1A)
     X                                +1000000.*(TTLI2-AH2-AP2)*CRF/(250.*TP*Q)
      XPT=CR*(.5*CLS+CC)*104/(ND*TPZ)
      XVP=CV3*CRF/ND
      XF=.1+.005*QSV(3)
      XWP=CW3*CR/ND
      XCT=CR*27.5*(40.5*QSV(3)+40.*DQS*(DS/VS(3)+TL3))/ND
      XP=(2.*((XVP+10.*TPZ)*(DS/VS(3)+TL3)+DS*XF*TPZ)/QSV(3)
     X+(2.*XCT+XWP*DS)/DQS)/TPZ
      SIC(3)=T1S*TDUR*PPKS/EB+(1.-T1S)*CCS+XP+XPT
     X                                          +1000000.*(TTLI3-AH3-AP3)*CRF/
     1(250.*TP*Q)+
     1(DD*CAR+TDUR*CPK)*T1A+DD*CLIMO*(1-T1A)
      XPT=((.5*CLSS+CC)*204.*CR)/(ND*TPZ)
      XVP=CV4*CRF /ND
      XF=.1+.005*QSV(4)
      XPA=2.*((XVP+10.*TPZ)*(DS/VS(4)+TL4)+DS*XF*TPZ)/QSV(4)
      XCT  =   (40.5*QSV(4)+40.*DQS*(DS/VS(4)+TL4))*27.5*CR/ND
      CWP=CW4*CR /ND
      XP=(XPA+((2.*XCT+CWP*DS)/DQS))/TPZ
      SCA4=750.*GATES+DQS*(297.5*G+(20.+126.*G)/RHO)
      XSC=.315*SQRT(SCA4)*CR /(ND*TP)
      SIC(4)=XPT+XP+XSC+(T1S*TDUR/EB)*PPKS+(1.-T1S)*CCS+
     1(DD*CAR+TDUR*CPK)*T1A+DD*CLIMO*(1-T1A)
      SCA5=750.*G*GATES+DQS*(297.5*G+146.*G/RHO)
      XSC=4.23*SQRT(SCA5)*CR/(ND*TPZ)
      XPT=(.5*CLS+CC)*324.*CR/(ND*TPZ)
      XCT=CR*27.5*(40.5*QSV(5)+40.*DQS*(DS/VS(5)+TL5))/ND
      XVP=CV5*CRF/ND
      XWP=CW5*CR/ND
      XF=.1+.005*QSV(5)
      XP=(2.*((XVP+10.*TPZ)*(DS/VS(5)+TL5)+DS*XF*TPZ)/QSV(5)
     X+(2.*XCT+XWP*DS)/DQS)/TPZ
      SIC(5)=(T1S*TDUR/EB)*PPKS+(1.-T1S)*CCS+XPT+XP+XSC+
     1(DD*CAR+TDUR*CPK)*T1A+DD*CLIMO*(1-T1A)
      DO 311 I=1,5
      CKS(I)=DNS/SIC(I)
      CKD(I)=DNS/DIC(I)
  311 CONTINUE
      RETURN
      END

$ENTRY
```

APPENDIX B

PROGRAM READOUTS

PART TWO: SENSITIVITY PROGRAM

```
$JOB
C*-----------------------------------------------------------------------
C     THIS PROGRAM IS FOR USE IN SENSITIVITY ANALYSIS OF A GIVEN STS
C     TECHNOLOGY, NUMBER OF TERMINALS, AND LOCATION TO ANY PARAMETER
C     WITHIN THE PROGRAM.  FOR INSTRUCTIONS ON ITS USE, PLEASE SEE THE
C     SUPPLIED DOCUMENTATION.   COST AND TIME IMPEDANCES ARE COMPUTED
C     BY SUCCESSIVE ITERATIONS VARYING DEMAND, KEEPING TRAFFIC INTEN-
C     SITIES CONSTANT.
C*-----------------------------------------------------------------------
      COMMON ALC,ALPHA1,ALPHA2,ALPHA3,ALPHA4,ALPHA5,ALPHA6,ALPHBE,ALT,
     XEAC,RHO,RHOS,T1A,T2A,T3A,T4A,T1S,T2S,T3S,T4S,UA,UPA,UPS,
     XUS,A,AEP7,AIT(5),B1,B2,B3,B4,B5,B6,CA,CAR,CB,CDIF(5),CG,CKD(5),
     XCKS(5),CL,CLIMO,CLS,CPA,CPK,CPS,CRF,CSA,CSS,DA,DAC,DBAR,DD,DIC(5),
     XDMAX,DNS,DPMA,DR,DRS,DS,DSS,DWA,DWS,ESTL70,G,GAMMA,HUB(20),ICBD,
     XIP7,IP8,K,ML,N,NGAT7,QAA,QQ,QS,QSV(5),QV,RB,RP,SIC(5),SIT(5),SMSA,
     XT7,TAIR(5),TB,TC,TCS,TDUR,TKT(5),TNN,TPHP70,TPHP90,VA,VAC,VD,VS(5)
     X,XA,XS,ZAT,ZEB,ZEC,ZEF(5),ZEG,ZEP(5),ZIP(5),ZOP(5),ZUP(5)
     X,ALPHA7,ALPHA8,ALPHA9,B7,B8,B9,DPMS,RNOSAT
     X,TP,CYCLE,LIMIT,CSYSIN
     X                                   ,AC,AS,CAA,CC,CLA,CLM,CLSS,CR
     X,CV1,CV2,CV3,CV4,CV5,CW3,CW4,CW5,EB,Q2A,Q3A,Q4A,Q2S,Q3S,Q4S,TCA,
     X    TL1,TL2,TL3,TL4,TL5,TPZ,     LA,      LS,NCITY,ND,NL, TSC
      DIMENSION VAL(5), VRT(5), GAIN(5)
      REAL ML
      INTEGER CYCLE
C     ------------------------------------------------------------------
C     READ AND WRITE INPUT DATA
C     ------------------------------------------------------------------
    2 FORMAT (15X,13HSERVICE AREA=,F7.2,5X,24HCBD TO AIRPORT DISTANCE=,
     XF5.2,5X,27HACCESS HIGHWAY LANES, 1970=,F3.1//)
    3 FORMAT (2X,10F12.4/)
    4 FORMAT (12X,20A1,5X,33HPEAK HOURLY PASSENGERS  --  1970=,F7.2,5X,
     X5H1990=, F7.1, 5X
     X21HAIRPORT ACCESS TRIPS=,F8.2)
    5 FORMAT (2X,9F12.4/)
    6 FORMAT (2X,8F12.4/)
   10  FORMAT (8F10.5)
   12  FORMAT (5F10.5)
   14 FORMAT (20I3)
   15 FORMAT (7X,10(I3, 9X),3X/)
   16 FORMAT  (9X,1HK,  11X,2HLA,  8X,5HLIMIT,  11X,2HLS,  10X,1HN,  10
     XX,2HND,  10X,2HNL)
   17 FORMAT (8I10)
   18 FORMAT (/2X,10F12.4)
   22 FORMAT (8X,I3,3X,9F12.4)
   33 FORMAT(20A1,F11.2,3F10.2)
   43 FORMAT (37X,'SATELLITE TERMINAL SYSTEM SENSITIVITY ANALYSIS')
   44 FORMAT (20X,80H*****************************************************
     X*****************************//)
   88 FORMAT(I4,F7.3,3I4)
  231 FORMAT (56X,4HDATA/)
  232 FORMAT (///52X,11HEND OF DATA//)
  400 FORMAT (9X,3HALC,8X,6HALPHA1,6X,6HALPHA2,6X,6HALPHA3,6X,6HALPHA4,
     X6X,6HALPHA5,6X,6HALPHA6,6X,6HALPHA7,6X,6HALPHA8,6X,6HALPHA9)
  410 FORMAT (9X,3HALT,9X,2HB1,10X,2HB2,10X,2HB3,10X,2HB4,10X,2HB5,
     X10X,2HB6,10X,2HB7,10X,2HB8,10X,2HB9)
  420 FORMAT (8X,6HALPHBE,8X,2HEB,9X,3HECA,9X,3HECS,9X,3HEAC,9X,3HRHO,
     X9X,4HRHOS,8X,3HUPA,9X,3HUPS,8X,2HUA)
  430 FORMAT (9X,2HUS,10X,3HT1A,9X,3HT2A,9X,3HT3A,9X,3HT4A,    9X,3HT1S,
     X9X,3HT2S,    9X,3HT3S,9X,3HT4S,9X,3HCRF)
```

```
440 FORMAT (10X,1HA,10X,2HAC,10X,2HCA,10X,3HCAR,9X,2HCB,10X,2HCC,
   X10X,2HCG,10X,4HCKSI,8X,2HCL,10X,3HCLA)
450 FORMAT (9X,5HCLIMO,7X,3HCLM,9X,3HCLS,9X,4HCLSS,8X,
   X3HCPA,10X,3HCPS,9X,2HCR,10X,3HCSA,9X,3HCSS,8X,3HCV1)
460 FORMAT (8X,3HCV2,9X,3HCV3,9X,3HCV4,9X,3HCV5,9X,3HCW3,9X,3HCW4,
   X9X,3HCW5,10X,3HDAC,9X,4HDMAX,8X,4HDPMS)
470 FORMAT (9X,3HDRS,9X,3HDSS,9X,3HDWA,9X,3HDWS,8X,4HDBAR,10X,2HML,10X
   X,2HQV,9X,3HQAA,10X,2HRB,10X,2HRP)
480 FORMAT (9X,2HTB,10X,2HTC,10X,3HTCA,9X,3HTCS,9X,4HTDUR,8X,
   X4HTKTI,9X,3HTL1,9X,3HTL2,9X,3HTL3,9X,3HTL4)
490 FORMAT (10X,3HTL5,8X,2HTP,10X,3HTPZ,9X,2HVA,10X,3HVAC,9X,2HVD,
   X10X,2HXA,10X,2HXS)
501 FORMAT (1H1)
510 FORMAT (8X,6HQSV(1),6X,6HQSV(2),6X,6HQSV(3),6X,6HQSV(4),6X,6HQSV(5
   X),7X,5HVS(1),7X,5HVS(2),7X,5HVS(3),7X,5HVS(4),7X,5HVS(5))
520 FORMAT (10X,1HK, 9X,6HZEP(K),6X,6HZIP(K),6X,6HZOP(K),6X,
   X6HZUP(K),6X,6HZAT(K),8X,3HZEB,9X,3HZEC, 7X,6HZEF(K),8X,3HZEG)
660 FORMAT (20X,80H*****************************TIME IMPEDANCE SUMMARY
   X*****************************/)
709 FORMAT (30X,53HTHIS IS A HYPOTHETICAL EXAMPLE FOR MODEL TESTING ON
   XLY///)
    READ (5,10) ALAMDA,ALC,ALT,       ALPHBE,UPA,UPS,UA,US,T1A,T2A,T3A,
   XT4A,T1S,T2S,T3S,T4S,RHO,RHOS,ECA,ECS,EAC,A,  CA,CAR,CB,CG,CKSI,CL,
   XCLIMO,CLS,CO,CPA,CPK,CPS,CRF,CSA,CSS,DAC,DMAX,DR,DPMA,DPMS,DRS,
   XDSS,DWA,DWS,DBAR,ML,QV,   QAA,   RP,RB,XA,XS,TB,TC,TCS,TDUR,TKTI,
   XVA,VAC,VD,ALPHA1,ALPHA2,ALPHA3,ALPHA4,ALPHA5,ALPHA6,ALPHA7,ALPHA8,
   XALPHA9,B1,B2,B3,B4,B5,B6,B7,B8,B9,TP
    READ (5,10)                                AC,AS,CAA,CC,CLA,CLM,CLSS,CR
   X,CV1,CV2,CV3,CV4,CV5,CW3,CW4,CW5,EE,Q2A,Q3A,Q4A,Q2S,Q3S,Q4S,TCA,
   XTSC ,TL1,TL2,TL3,TL4,TL5,TPZ
    READ (5,17) LA,LS,ND,NL
    READ (5,14) K,N
    READ (5,14) LIMIT
    READ (5,12)(QSV(I),I=1,5)
    READ (5,12)(VS(I),I=1,5)
    DO 13 J=1,5
13  READ (5,12)ZEP(J),ZIP(J),ZOP(J),ZUP(J),ZAT,ZEB,ZEC,ZEF(J),ZEG
    WRITE (6,501)
    WRITE (6,709)
    WRITE (6,231)
    WRITE (6,400)
    WRITE (6,3) ALC,ALPHA1,ALPHA2,ALPHA3,ALPHA4,ALPHA5,ALPHA6,ALPHA7,
   XALPHA8,ALPHA9
    WRITE (6,410)
    WRITE (6,3) ALT,B1,B2,B3,B4,B5,B6,B7,B8,B9
    WRITE (6,420)
    WRITE (6,3)        ALPHBE,EB,ECA,ECS,EAC,RHO,RHOS,UPA,UPS,UA
    WRITE (6,430)
    WRITE (6,3)     US,T1A,T2A,T3A,T4A,T1S,T2S,T3S,T4S,CRF
    WRITE (6,440)
    WRITE (6,3) A,AC,CA,CAR,CB,CC,CG,CKSI,CL,CLA
    WRITE (6,450)
    WRITE (6,3) CLIMO,CLM,CLS,CLSS,CPA,CPS,CR,CSA,CSS,CV1
    WRITE (6,460)
    WRITE (6,3) CV2,CV3,CV4,CV5,CW3,CW4,CW5,DAC,DMAX,DPMS
    WRITE (6,470)
    WRITE (6,3) DRS,DSS,DWA,DWS,DBAR,ML,QV,QAA,RB,RP
    WRITE (6,480)
    WRITE (6,3) TB,TC,TCA,TCS,TDUR,TKTI,TL1,TL2,TL3,TL4
    WRITE (6,490)
```

```
      GAIN(K)=TP*QQ*VAL(K)/4000
      VRT(K)=GAIN(K)/(CDIF(K)*CRF)
C     ------------------------------------------------------------------
C     OUTPUT RESULTS
C     ------------------------------------------------------------------
      WRITE (6,44)
      WRITE (6,180) K,N,G,AIT(K),SIT(K),VRT(K)
      WRITE (6,190) CSYSIN,CDIF(K),VAL(K)
      WRITE (6,44)
  180 FORMAT (1X,2HK=,I2,4X,2HN=,I2,4X,2HG=,F4.2,4X,19HDIRECT ACCESS TIM
     XE=,F6.2,4X,22HSATELLITE ACCESS TIME=,F6.2,4X,22HBENEFIT TO COST RA
     XTIO=,F8.1/)
  190 FORMAT (4X,21HCAPITAL COST, NO STS=,F10.4,4X,24HADDITIONAL COST FO
     XR STS=,F8.2,4X,  23HUSER COST DIFFERENTIAL=,F6.2//)
  200 CONTINUE
  502 FORMAT(//////////////)
      STOP
      END

      SUBROUTINE STAB
C     ------------------------------------------------------------------
C     A PROGRAM TO CALCULATE G AND GAMMA
C     ------------------------------------------------------------------
      COMMON ALC,ALPHA1,ALPHA2,ALPHA3,ALPHA4,ALPHA5,ALPHA6,ALPHBE,ALT,
     XEAC,RHO,RHOS,T1A,T2A,T3A,T4A,T1S,T2S,T3S,T4S,UA,UPA,UPS,
     XUS,A,AEP7,AIT(5),B1,B2,B3,B4,B5,B6,CA,CAR,CB,CDIF(5),CG,CKD(5),
     XCKS(5),CL,CLIMO,CLS,CPA,CPK,CPS,CRF,CSA,CSS,DA,DAC,DBAR,DD,DIC(5),
     XDMAX,DNS,DPMA,DR,DRS,DS,DSS,DWA,DWS,ESTL70,G,GAMMA,HUB(20),ICBD,
     XIP7,IP8,K,ML,N,NGAT7,QAA,QQ,QS,QSV(5),QV,RB,RP,SIC(5),SIT(5),SMSA,
     XT7,TAIR(5),TB,TC,TCS,TDUR,TKT(5),TNN,TPHP70,TPHP90,VA,VAC,VD,VS(5)
     X,XA,XS,ZAT,ZEB,ZEC,ZEF(5),ZEG,ZEP(5),ZIP(5),ZOP(5),ZUP(5)
     X,ALPHA7,ALPHA8,ALPHA9,B7,B8,B9,DPMS,RNOSAT
     X,TP,CYCLE,LIMIT,CSYSIN
     X                                    ,AC,AS,CAA,CC,CLA,CLM,CLSS,CR
     X,CV1,CV2,CV3,CV4,CV5,CW3,CW4,CW5,EB,Q2A,Q3A,Q4A,Q2S,Q3S,Q4S,TCA,
     X    TL1,TL2,TL3,TL4,TL5,TPZ,      LA,       LS,NCITY,ND,NL
      INTEGER CYCLE
      REAL ML
      GAMMA=1.-1./(1.+A*(TKT(K)**ALT)*(CKS(K)**ALC))
      G=(1.+GAMMA*N)/(N+1.)
      RETURN
      END

      SUBROUTINE TIME
C     ------------------------------------------------------------------
C     A PROGRAM TO EVALUATE SATELLITE TERMINAL SYSTEM TIME IMPEDANCES
C     ------------------------------------------------------------------
C     ASSUME THROUGHOUT THAT WALKING VELOCITY=3.5 FPS
C     ------------------------------------------------------------------
      DIMENSION Q(5), TS3(5),TSM(5),TAT(5),TS5(5),TS6(5),TS8(5),TS22(5)
      DIMENSION TS23(5), TWC(5), TS24(5),TSONE(5),TSTWO(5),TS4(5)
      DIMENSION TAONE(5),TATWO(5),TA2(5),TA3(5),TA5(5),TA26(5)
      COMMON ALC,ALPHA1,ALPHA2,ALPHA3,ALPHA4,ALPHA5,ALPHA6,ALPHBE,ALT,
     XEAC,RHO,RHOS,T1A,T2A,T3A,T4A,T1S,T2S,T3S,T4S,UA,UPA,UPS,
     XUS,A,AEP7,AIT(5),B1,B2,B3,B4,B5,B6,CA,CAR,CB,CDIF(5),CG,CKD(5),
     XCKS(5),CL,CLIMO,CLS,CPA,CPK,CPS,CRF,CSA,CSS,DA,DAC,DBAR,DD,DIC(5),
     XDMAX,DNS,DPMA,DR,DRS,DS,DSS,DWA,DWS,ESTL70,G,GAMMA,HUB(20),ICBD,
     XIP7,IP8,K,ML,N,NGAT7,QAA,QQ,QS,QSV(5),QV,RB,RP,SIC(5),SIT(5),SMSA,
     XT7,TAIR(5),TB,TC,TCS,TDUR,TKT(5),TNN,TPHP70,TPHP90,VA,VAC,VD,VS(5)
     X,XA,XS,ZAT,ZEB,ZEC,ZEF(5),ZEG,ZEP(5),ZIP(5),ZOP(5),ZUP(5)
```

```
      WRITE (6,6) TL5,TP,TPZ,VA,VAC,VD,XA,XS
      WRITE (6,16)
      WRITE (6,15) K,LA,LIMIT,LS,N,ND,NL
      WRITE (6,510)
      WRITE (6,18) (QSV(I),I=1,5),(VS(I),I=1,5)
      WRITE (6,520)
      DO 90 J=1,5
   90 WRITE (6,22) J,ZEP(J),ZIP(J),ZOP(J),ZUP(J),ZAT,ZEB,ZEC,ZEF(J),ZEG
      WRITE (6,232)
C     ------------------------------------------------------------------
C     READ DATA FOR A SPECIFIC CITY
C     ------------------------------------------------------------------
      READ(5,33) (HUB(J), J=1,20),TPHP70, TPHP90, SMSA,ESTL70
      READ(5,88) NGAT7,AEP7,IP7,IP8,ICBD
C     ------------------------------------------------------------------
C     CALCULATE MARKET
C     ------------------------------------------------------------------
      QQ=RHO*TPHP90/2.
      CBD=ICBD
      DS=ALAMDA*ICBD
      SMSA=SMSA/2.
C*****------------------------------------------------------------------
C*****------------------------------------------------------------------
C     INSERT LOOP AT THIS POINT TO VARY THE PARAMETER DESIRED.  THE LOOP
C     LIMIT SHOULD BE STATEMENT NUMBER 200.
      DO 200 I5=1,3
      QSV(4)=10*I5
C*****------------------------------------------------------------------
C*****------------------------------------------------------------------
      WRITE (6,501)
      WRITE (6,43)
      WRITE(6,44)
      WRITE (6,800) QSV(K)
  800 FORMAT (45X,  14HVEHICLE SIZE =,F5.1,1X,10HPASSENGERS)
      WRITE (6,4)   (HUB(J),J=1,20),TPHP70,TPHP90,QQ
      WRITE (6,2) SMSA,DS,ESTL70
      WRITE (6,660)
C     ------------------------------------------------------------------
C     BEGIN CYCLING
C     ------------------------------------------------------------------
      CYCLE=0.
      TKT(K)=TKTI
      CKS(K)=CKSI
  110 CALL STAB
      IF(G-0.95)111,111,200
  111 QS=QQ*(1-G)/N
      CALL TIME
      CALL COST
      CYCLE=CYCLE+1.
      IF (CYCLE.LE.LIMIT) GO TO 110
C     ------------------------------------------------------------------
C     LIMIT IS THE NUMBER OF ITERATIONS PERFORMED.  EXPERIENCE HAS SHOWN
C     CONVERGENCE TO FOUR DECIMAL PLACES CONSISTANTLY WITH LIMIT  =  5
C     ------------------------------------------------------------------
  300 CONTINUE
C     ------------------------------------------------------------------
C     CALCULATE VALUE
C     ------------------------------------------------------------------
      VAL(K)=CC*(TNN-(G*AIT(K)+(1.-G)*SIT(K)))/60.+DNS-(G*DIC(K)+(1.-G)*
     XSIC(K))
```

```
     X,ALPHA7,ALPHA8,ALPHA9,B7,B8,B9,DPMS,RNOSAT
     X,TP,CYCLE,LIMIT,CSYSIN
     X                                    ,AC,AS,CAA,CC,CLA,CLM,CLSS,CR
     X,CV1,CV2,CV3,CV4,CV5,CW3,CW4,CW5,EB,Q2A,Q3A,Q4A,Q2S,Q3S,Q4S,TCA,
     X    TL1,TL2,TL3,TL4,TL5,TPZ,      LA,       LS,NCITY,ND,NL
      INTEGER CYCLE
      REAL ML
      XN=N
C     ------------------------------------------------------------------
C     INITIALIZE VALUES
C     ------------------------------------------------------------------
      IF(K-4) 10,11,11
   10 Q(K)=QQ
      GO TO 12
   11 Q(K)=QQ*G
  12  CONTINUE
C     ------------------------------------------------------------------
C     PATH ONE  TAONE  TO THE AIRPORT, DIRECT
C     ------------------------------------------------------------------
      DA=2*SQRT(G*SMSA/3.14159)/3.
      RNOSAT=2*SQRT(SMSA/3.14159)/3.
      TA1=60*DA/VA
      ZOT=CA*EAC/Q(K)
 100  DAC1=AMIN1(1.0,ZOT)
 101  ZAP=(B1+ZEP(K))**ALPHA1
      DAC2=AMAX1(1.0,ZAP)
      TA2(K)=60*((DAC/(VAC*DAC1))+DAC2/CA)
      AZAP=(B2+ZIP(K))**ALPHA2
      TPKA=(60/UA)*AMAX1(1.0,AZAP)+1.0+.00208*(XA+DR)+.0048*DWA+
     C.00278*DPMA
      ZA=(B3+ZOP(K))**ALPHA3
      TCTA=TC*AMAX1(1.0,ZA)
      TA3(K)=T1A*TPKA+(1-T1A)*TCTA
      TA4=.00238*(DBAR+DMAX)
  80  ZAA=(B4+ZUP(K))**ALPHA4
      TA5(K)=AMAX1(1.,ZAA)/UPA
      TA6=5+.3*DA
      TA7=1/(ML*CL)
      TA8=(2.+QV)/(2.*CG)
      TAONE(K)=TA1+TA2(K)+TA3(K)+TA4+TA5(K)+TA6+TA7+TA8
C     ------------------------------------------------------------------
C     PATH TWO    TATWO    FROM THE AIRPORT, DIRECT
C     ------------------------------------------------------------------
      TA21=QV/(4.*ML*CL)
      TA22=QV*(.5*(1/RB-1/RP)+RB/(6*RP**2))*ALPHBE
      TA23=TA4
      TA24=.00238*T1A*DWA
      ALPHAB=T2A/(T2A+T3A+T4A)
      TCWA=.5*TB*ALPHAB+TC*(1-ALPHAB)
      TA25=TPKA*T1A+TCWA*(1.-T1A)
      TA26(K)=TA2(K)
      TA27=TA1
      TATWO(K)=TA21+TA22+TA23+TA24+TA25+TA26(K)+TA27
C     ------------------------------------------------------------------
C     PATH THREE    TSONE    TO THE AIRPORT VIA STS
C     ------------------------------------------------------------------
      DD=2*SQRT((1.-G)*SMSA/(N*3.14159))/3.
      TS1=60*DD/VD
      ZAB=(B7+ZAT)**ALPHA7
      TPKS=60/US*AMAX1(1.0,ZAB)+1.0+.00208*XS+.0048*DWS+.00278*DPMS
```

```
      ZB=(B8+ZEB)**ALPHA8
      TCTS=TC*AMAX1(1.0,ZB)
      TS2   = T1S*TPKS+(1-T1S)*TCTS
      TS3(1)=0.0
      TS3(2)=0.0
      TS3(3)=0.0
      ZC=(B9+ZEC)**ALPHA9
      TS3(4)=AMAX1(1.0,ZC)/UPS
      TS3(5)=TS3(4)
      TSW=5+0.3*DD
      ZD=30*QSV(K)/QS
      ZE=QSV(K)/CLS
      TSL=AMAX1(ZD,ZE)
      IF(K-3)132,132,133
  132 TSM(K)=60.*DS/VS(K)+TA2(K)
      GO TO 134
  133 TSM(K)=60.*DS/VS(K)
  134 TAT(1)=TCTA+TA4
      TAT(2)=TAT(1)
      TAT(3)=TAT(1)
      TAT(5)=0.0
      DWS=DMAX-DBAR
      TAT(4)=0.5*QSV(4)/CLS+DWS/210
      TS4(K)=TSW+TSL+TSM(K)+TAT(K)
      ZF=(B5+ZEF(K))**ALPHA5
      TS5(1)=AMAX1(1.,ZF)/UPS
      TS5(2)=TS5(1)
      TS5(3)=TS5(1)
      TS5(4)=0.0
      TS5(5)=0.0
      TS6(K)=3*(6-K)
      TS7=TA7
  160 TS8(K)=TA8
      TS8(5)=2.0
      TSONE(K)=TS1+TS2    +TS3(K)+TS4(K)+TS5(K)+TS6(K)+TS7+TS8(K)
C     ------------------------------------------------------------------
C     PATH FOUR   TSTWO   FROM THE AIRPORT VIA STS
C     ------------------------------------------------------------------
      TS21=TA21
  165 TS22(K)=TA22
      TS22(5)=0.C
  170 TS23(K)=TA23
      TS23(4)=(DMAX-DBAR)*.00238
      TS23(5)=0.C
      TWC(K)=TS6(K)
      TST=TSL+DSS/210.
      TS24(K)=TWC(K)+TSL+TSM(K)+TST
      TS25=QV*(1-G)*ALPHBE/(2*N*CB)
      ZG=(B6+ZEG)**ALPHA6
      TRS=(60/US)*AMAX1(1.,ZG)+1.+.00208*(XS+DRS)+.0048*DWS+.00278*
     CDPMS
      ABS=T2S/(T2S+T3S+T4S)
      TCWS=(TB*ABS)/2+TC*(1-ABS)
      TS26=TRS*T1S+TCWS*(1-T1S)
      TS27=60*DD/VD
      TSTWO(K)=TS21+TS22(K)+TS23(K)+TS24(K)+TS25+TS26+TS27
C     ------------------------------------------------------------------
C     COMPUTE IMPEDANCE FOR THE SYSTEM WITH STS
C     ------------------------------------------------------------------
      AIT(K)=0.50*(TAONE(K)+TATWO(K))
```

```
  270 FORMAT (47X,25HTIME IMPEDANCE COMPONENTS)
  280 FORMAT (26X,7H-------,13X,7H-------,13X,7H-------,13X,7H-------)
  670 FORMAT (29X,2HTO,17X,4HFROM,17X,2HTO,17X,4HFROM)
  680 FORMAT (35X,6HDIRECT,35X,7HVIA STS)
      WRITE (6,240) TNN
      WRITE (6,270)
      WRITE (6,680)
      WRITE (6,670)
      WRITE(6,210) TA1,TA21,TS1,TS21,TA2(K),TA22,TS2    ,TS22(K),TA3(K),T
     XA23,TS3(K),TS23(K),TA4,TA24,TS4(K),TS24(K),TA5(K),TA25,TS5(K),TS25
     X,TA6,TA26(K),TS6(K),TS26,TA7,TA27,TS7,TS27
      WRITE (6,220) TA8,TS8(K)
      WRITE (6,280)
      WRITE(6,250) TAONE(K),TATWO(K),TSONE(K),TSTWO(K)
      WRITE(6,260) TAIR(K),TKT(K)
 1000 CONTINUE
      RETURN
      END

      SUBROUTINE COST
C     ------------------------------------------------------------------
C     A PROGRAM TO EVALUATE SATELLITE TERMINAL SYSTEM COST IMPEDANCES
C     ------------------------------------------------------------------
      COMMON ALC,ALPHA1,ALPHA2,ALPHA3,ALPHA4,ALPHA5,ALPHA6,ALPHBE,ALT,
     XEAC,RHO,RHOS,T1A,T2A,T3A,T4A,T1S,T2S,T3S,T4S,UA,UPA,UPS,
     XUS,A,AEP7,AIT(5),B1,B2,B3,B4,B5,B6,CA,CAR,CB,CDIF(5),CG,CKD(5),
     XCKS(5),CL,CLIMO,CLS,CPA,CPK,CPS,CRF,CSA,CSS,DA,DAC,DBAR,DD,DIC(5),
     XDMAX,DNS,DPMA,DR,DRS,DS,DSS,DWA,DWS,ESTL70,G,GAMMA,HUB(20),ICBD,
     XIP7,IP8,K,ML,N,NGAT7,QAA,QQ,QS,QSV(5),QV,RB,RP,SIC(5),SIT(5),SMSA,
     XT7,TAIR(5),TB,TC,TCS,TDUR,TKT(5),TNN,TPHP70,TPHP90,VA,VAC,VD,VS(5)
     X,XA,XS,ZAT,ZEB,ZEC,ZEF(5),ZEG,ZEP(5),ZIP(5),ZOP(5),ZUP(5)
     X,ALPHA7,ALPHA8,ALPHA9,B7,B8,B9,DPMS,RNOSAT
     X,TP,CYCLE,LIMIT,CSYSIN
     X                                    ,AC,AS,CAA,CC,CLA,CLM,CLSS,CR
     X,CV1,CV2,CV3,CV4,CV5,CW3,CW4,CW5,EB,Q2A,Q3A,Q4A,Q2S,Q3S,Q4S,TCA,
     X    TL1,TL2,TL3,TL4,TL5,TPZ,      LA,       LS,NCITY,ND,NL, TSC
      INTEGER CYCLE
      REAL ML
      XN=N
C     ------------------------------------------------------------------
C     AIRPORT COST FOR THIS N, NUMBER OF SATELLITES
C     ------------------------------------------------------------------
C     ------------------------------------------------------------------
C     COMPUTE GATE 90
C     ------------------------------------------------------------------
      AEP9=6.*AEP7
      AOP7=IP7
      AOP8=IP8
      GATE7=NGAT7
      AOP9=1.5*AOP8
       GATE9=(6.*(GATE7-2.)+2.)*AOP9*AEP7/(AOP7*AEP9)
      GATES=GATE9-GATE7
C     ------------------------------------------------------------------
C     COMPUTE BASIC FLOWS
C     ------------------------------------------------------------------
      Q=QQ
      QA=Q*G
      DTP=TPHP90-TPHP70
      DQ=RHO*(TPHP90-TPHP70)/2.
      DQV=DQ/EAC
```

```
      SIT(K)=0.5C*(TSONE(K)+TSTWO(K))
C     ------------------------------------------------------------------
C     COMPUTE IMPEDANCE FOR THE NO SATELLITE CASE
C     ------------------------------------------------------------------
C*****************************************************************************
C     ALTHOUGH THIS IS NOT DOCUMENTED IN REFERENCE 1 (SNELL, J.E, "A FIRST
C     APPROXIMATION SATELLITE TERMINAL SYSTEM EVALUATION MODEL," REPORT
C     FAA-AV-71-1, MARCH, 1971), REFERENCE TO PAGES 45 THROUGH 63 WILL
C     SHOW THE UNDERLYING LOGIC.  THE FOLLOWING EXPLAINS EACH COMPONENT:
C-----------------------------------------------------------------------------
C          TIME IMPEDANCE TO THE AIRPORT: TN1
C               ACCESS TO THE AIRPORT  60*RNOSAT/VA
C               AIRPORT CIRCULATION  DAC/(VAC*DNN1)+DN23/CA
C               CURB TRANSFER OR PARKING TIME  T1A*TP3+(1-T1A)*DN22
C               AIRPORT WALKING TIME   TA4
C               AIRPORT PROCESSING TIME  AMAX1(1.,SN5)/UPA
C               AIRCRAFT LOADING TIME  TA7
C               PREDEPARTURE INGRESSION LOSS  TA8
C-----------------------------------------------------------------------------
C          TIME IMPEDANCE FROM THE AIRPORT: TN2
C               AIRCRAFT UNLOADING TIME  TA21
C               BAGGAGE CLAIM TIME  TA22
C               AIRPORT WALKING TIME  TA4
C               TRANSFER TIME TO PARKING OR CURB LOADING  TA24
C               TIME TO RECOVER AUTO OR CURB WAITING  T1A*TP3+(1-T1A)*TCWA
C               AIRPORT CIRCULATION  DAC/(VAC*DNN1)+DN23/CA
C               DESTINATION ACCESS TIME 60*RNOSAT/VA
C*****************************************************************************
      DN1=CA*EAC/QQ
      DNN1=AMIN1(1.,DN1)
      DN3P=(B2+ZIP(1))**ALPHA2
       TP3=(60/UA)*AMAX1(1.0,DN3P)+1.0+.00208*(XA+DR)+.0048*DWA+
     C.00278*DPMA
      DN2=(B3+ZOP(1))**ALPHA3
      DN22=TC*AMAX1(1.,DN2)
      DN4=(B1+ZEP(1))**ALPHA1
      DN23=AMAX1(1.0,DN4)
      DN5=(B4+ZUP(1))**ALPHA4
      TN1=60.*RNOSAT/VA+60.*((DAC/(VAC*DNN1))+DN23/CA)+T1A*TP3+(1.-T1A)*
     XDN22+TA4+AMAX1(1.,DN5)/UPA+5.+.3*RNOSAT+TA7+TA8
      TN2=TA21+TA22+TA4+TA24+T1A*TP3+(1.-T1A)*TCWA+60.*((DAC/(VAC*DNN1))
     X+DN23/CA)+60.*RNOSAT/VA
      TNN=(TN1+TN2)/2.
C     ------------------------------------------------------------------
C     COMPUTE IMPEDANCE RATIOS
C     ------------------------------------------------------------------
      TAIR(K)=TNN/AIT(K)
      TKT(K)=TNN/SIT(K)
      IF (CYCLE.EQ.LIMIT) GO TO 998
      GO TO 1000
 998  CONTINUE
C     ------------------------------------------------------------------
C     OUTPUT
C     ------------------------------------------------------------------
 210  FORMAT(13X,4F20.4)
 220  FORMAT(13X,F20.4,20X,F20.4)
  240 FORMAT (42X,28HTIME IMPEDANCE WITHOUT STS =,F9.4/)
  250 FORMAT (3X,10HIMPEDANCES,4F20.4/)
  260 FORMAT (24X,21HTIME IMPEDANCE RATIOS,11X,7HDIRECT:,F7.4,10X,
     X8HVIA STS:,F7.4/)
```

```
      DQA=G*DQ
      DQAV=G*DQV
      DQS=((1.-G)/XN)*DQ
      DQSV1=DQS/QSV(1)
      DQSV2=DQS/QSV(2)
      DQSV3=DQS/QSV(3)
      DQSV4=DQS/QSV(4)
      DQSV5=DQS/QSV(5)
C     ------------------------------------------------------------------
C     ACCESS HIGHWAY COSTS
C     ------------------------------------------------------------------
      AHN=RNOSAT*((DQV/1800.)-.2*ESTL70)
     X*2*CLM
      AH1=DA*(((DQAV+XN*DQSV1)/1800.)-.2*ESTL70)
     X*2*CLM
      AH2=DA*(((DQAV+XN*DQSV2)/1800.)-.2*ESTL70)
     X*2*CLM
       AH3=DA*((DQAV/1800.)-.2*ESTL70)
     X*2*CLM
      AH4=AH3
      AH5=AH3
C     ------------------------------------------------------------------
C      AIRPORT PARKING - 1 TO 5 ARE SAME
C     ------------------------------------------------------------------
      PAN=(T1A*TDUR*AS/EB)*DQ
      PAW=PAN*G
      APN=.000001*PAN*(CLA/LA+1.25+1.07*LA)
      AP1=APN*G
      AP2=AP1
      AP3=AP1
      AP4=AP1
      AP5=AP1
C     ------------------------------------------------------------------
C     AIRPORT CURB COSTS
C     ------------------------------------------------------------------
      ECAI=T2A/Q2A+T3A/Q3A+T4A/Q4A
      ACA=ECAI*TCA*AC*DQ/60.
      ACN=.000001*ACA*CAA
      AC13=ECAI*TCA*AC*(DQA+XN*DQS)/60.
      AC1=.000001*AC13*CAA
      AC2=AC1
      AC3=AC1
      AC45=ECAI*TCA*AC*DQA/60.
      AC4=.000001*AC45*CAA
      AC5=AC4
C     ------------------------------------------------------------------
C     CIRCULATION ROADWAY --- AREAS
C     ------------------------------------------------------------------
      AN=DQ* 146./RHO+ACA+PAN/NL +750.*GATES
      A1=DQ* 146./RHO+AC13+PAW/NL +750.*GATES
      A2=A1
      A3=DQ* (81.+65.*G)/RHO+AC13+PAW/NL +750.*GATES
      A4=DQ* (20.+146.*G)/RHO+AC45+PAW/NL +750.*GATES
      A5=DQ* G*(20.+146.*G)/RHO+AC45+PAW/NL +750.*GATES
C     ------------------------------------------------------------------
C     CIRCULATION ROADWAY -- COSTS
C     ------------------------------------------------------------------
      CRN=.000001*DQ*.419*SQRT(AN)*EAC
      CR1=.000001*DQ*.419*G*SQRT(A1)*EAC
      CR2=CR1
```

```
      CR3=.000001*DQ*.419*G*SQRT(A3)*EAC
      CR4=.000001*DQ*.419*G*SQRT(A4)*EAC
      CR5=.000001*DQ*.419*G*SQRT(A5)*EAC
C     ------------------------------------------------------------------
C     AIRPORT TERMINAL - DOMESTIC
C     ------------------------------------------------------------------
      ATN=.000001*(.5*CLA+CC)*(146.*DTP+1500.*GATES)
      AT1=ATN
      AT2=ATN
      AT3=.000001*(.5*CLA+CC)*((81.+65.*G)*DTP+1500.*GATES)
      AT4=.000001*(.5*CLA+CC)*((20.+126.*G)*DTP+1500.*GATES)
      AT5=G*ATN
      TTLDN=AHN+CRN+APN+ACN+ATN
      TTLD1=AH1+CR1+AP1+AC1+AT1
      TTLD2=AH2+CR2+AP2+AC2+AT2
      TTLD3=AH3+CR3+AP3+AC3+AT3
      TTLD4=AH4+CR4+AP4+AC4+AT4
      TTLD5=AH5+CR5+AP5+AC5+AT5
C     ------------------------------------------------------------------
C     AIRPORT TERMINAL - INTERNATIONAL
C     ------------------------------------------------------------------
      ADDI=(.5*CLA+CC)*73.*DTP*.000001
      TTLIN=TTLDN+ADDI
      TTLI1=TTLD1+ADDI
      TTLI2=TTLD2+ADDI
      TTLI3=TTLD3+ADDI
      TTLI4=TTLD4+ADDI*G
      TTLI5=TTLD5+ADDI*G
C     ------------------------------------------------------------------
C     SATELLITE SYSTEM COSTS PER TERMINAL
C     ------------------------------------------------------------------
      SATN=0.
      SAT1=.000001*(132.8+52.8*DS)*DQS
      SAT2=.000001*(21600.+(3685.+45.6*DS)*DQS)
      SAT3=.000001*(113374.+500000.*DS+(5057.5+77.7*DS)*DQS)
      SAT4=.000001*(44550.+4.*DQS**1.5+2000000.*DS+(8191.+340.*DS)*DQS)
      SAT5=.000001*(163800.+4.2*DQS**1.5+7000000.*DS+(8216.+109.5*DS)*D
     1S)
C     ------------------------------------------------------------------
C     TOTAL SYSTEM COSTS - ALL OPTIONS , THIS VALUE OF N
C     ------------------------------------------------------------------
      CSYSDN=TTLDN
      CSYSD1=TTLD1+SAT1*XN
      CSYSD2=TTLD2+SAT2*XN
      CSYSD3=TTLD3+SAT3*XN
      CSYSD4=TTLD4+SAT4*XN
      CSYSD5=TTLD5+SAT5*XN
      CSYSIN=TTLIN
      CSYSI1=TTLI1+SAT1*XN
      CSYSI2=TTLI2+SAT2*XN
      CSYSI3=TTLI3+SAT3*XN
      CSYSI4=TTLI4+SAT4*XN
      CSYSI5=TTLI5+SAT5*XN
      CDIF(1)=CSYSI1-CSYSIN
      CDIF(2)=CSYSI2-CSYSIN
      CDIF(3)=CSYSI3-CSYSIN
      CDIF(4)=CSYSI4-CSYSIN
      CDIF(5)=CSYSI5-CSYSIN
      CSTSN=0.
   80 CONTINUE
```

```
C     ------------------------------------------------------------------
C       COMPUTE COST IMPEDANCES
C       DIRECT ---- NO STS --- DNS
C     ------------------------------------------------------------------
      SEPAT=(CSYSIN-APN-AHN)*CRF/(ND*TP*Q)
      DNS=(RNOSAT*CAR+TDUR*CPK)*T1A+RNOSAT*CLIMO*(1.-T1A)+1000000.*SEPAT
      DNN=(DA*CAR+TDUR*CPK)*T1A+DA*CLIMO*(1.-T1A)
C     ------------------------------------------------------------------
C       DIRECT  WITH STS -----DIC(K)
C       SAME AS DNS FOR K=1,2,3
C     ------------------------------------------------------------------
      DIC(1)=DNN+1000000.*(TTLI1 -AP1-AH1)*CRF/(ND*TP*Q)
      DIC(2)=DNN+1000000.*(TTLI2 -AP2-AH2)*CRF/(ND*TP*Q)
      DIC(3)=DNN+1000000.*(TTLI3 -AP3-AH3)*CRF/(ND*TP*Q)
      DIC(4)=DNN+1000000.*(TTLI4 -AP4-AH4)*CRF/(ND*TP*QA)
      DIC(5)=DNN+1000000.*(TTLI5 -AP5-AH5)*CRF/(ND*TP*QA)
C     ------------------------------------------------------------------
C      VIA STS ----- SIC(K)
C     ------------------------------------------------------------------
      ECSI=T2S/Q2S+T3S/Q3S+T4S/Q4S
      CCS=AC*CAA*(1.15*CR *TSC*ECSI)/(ND*TPZ*.6*60.)
      PPKS=((CLSS/LS+1.25+1.07*LS)*AS*CR     +85.)*1.15/(2.5*ND*TDUR)
      XP  =  2.*(((CV1*CRF/ND)+10.*TPZ)*(DS/VS(1)+TL1)/TPZ+(.1+.005*
     XQSV(1))*DS)/QSV(1)
      SIC(1)= XP +.02    +1000000.*(TTLI1-AH1-AP1)*CRF/(250.*TP*Q)+
     1(DD*CAR+TDUR*CPK)*T1A+DD*CLIMO*(1-T1A)
      XVP=CV2*CRF/ND
      XF=.1+.005*QSV(2)
      XP=(2.*((XVP+10.*TPZ)*(DS/VS(2)+TL2)+DS*XF*TPZ)/QSV(2)
     X+720.*QSV(2)*CR/(ND*DQS))/TPZ
      SIC(2)=T1S*TDUR*PPKS/EB+(1.-T1S)*CCS+XP
     1+(DD*CAR+TDUR*CPK)*T1A+DD*CLIMO*(1.-T1A)
     X                          +1000000.*(TTLI2-AH2-AP2)*CRF/(250.*TP*Q
      XPT=CR*(.5*CLS+CC)*104/(ND*TPZ)
      XVP=CV3*CRF/ND
      XF=.1+.005*QSV(3)
      XWP=CW3*CR/ND
      XCT=CR*27.5*(40.5*QSV(3)+40.*DQS*(DS/VS(3)+TL3))/ND
      XP=(2.*((XVP+10.*TPZ)*(DS/VS(3)+TL3)+DS*XF*TPZ)/QSV(3)
     X+(2.*XCT+XWP*DS)/DQS)/TPZ
      SIC(3)=T1S*TDUR*PPKS/EB+(1.-T1S)*CCS+XP+XPT
     X                                  +1000000.*(TTLI3-AH3-AP3)*CRF
     1(250.*TP*Q)+
     1(DD*CAR+TDUR*CPK)*T1A+DD*CLIMO*(1-T1A)
      XPT=((.5*CLSS+CC)*204.*CR)/(ND*TPZ)
      XVP=CV4*CRF /ND
      XF=.1+.005*QSV(4)
      XPA=2.*((XVP+10.*TPZ)*(DS/VS(4)+TL4)+DS*XF*TPZ)/QSV(4)
      XCT  =   (40.5*QSV(4)+40.*DQS*(DS/VS(4)+TL4))*27.5*CR/ND
      CWP=CW4*CR /ND
      XP=(XPA+((2.*XCT+CWP*DS)/DQS))/TPZ
      SCA4=750.*GATES+DQS*(297.5*G+(20.+126.*G)/RHO)
      XSC=.315*SQRT(SCA4)*CR /(ND*TP)
      SIC(4)=XPT+XP+XSC+(T1S*TDUR/EB)*PPKS+(1.-T1S)*CCS+
     1(DD*CAR+TDUR*CPK)*T1A+DD*CLIMO*(1-T1A)
      SCA5=750.*G*GATES+DQS*(297.5*G+146.*G/RHO)
      XSC=4.23*SQRT(SCA5)*CR/(ND*TPZ)
      XPT=(.5*CLS+CC)*324.*CR/(ND*TPZ)
      XCT=CR*27.5*(40.5*QSV(5)+40.*DQS*(DS/VS(5)+TL5))/ND
      XVP=CV5*CRF/ND
```

```
      XWP=CW5*CR/ND
      XP=.1+.005*QSV(5)
      XP=(2.*((XVP+10.*TPZ)*(DS/VS(5)+TL5)+DS*XP*TPZ)/QSV(5)
     X+(2.*XCT+XWP*DS)/DQS)/TPZ
      SIC(5)=(T1S*TDUR/EB)*PPKS+(1.-T1S)*CCS+XPT+XP+XSC+
     1(DD*CAR+TDUR*CPK)*T1A+DD*CLIMO*(1-T1A)
      CKS(K)=DNS/SIC(K)
      CKD(K)=DNS/DIC(K)
      IF (CYCLE.NE.LIMIT) GO TO 313
      WRITE (6,650)
      WRITE (6,600) DNS
      WRITE (6,720)
      WRITE (6,710)
      WRITE (6,711) AHN,AH1,AH2,AH3,AH4,AH5
      WRITE (6,712) CRN,CR1,CR2,CR3,CR4,CR5
      WRITE (6,713) APN,AP1,AP2,AP3,AP4,AP5
      WRITE (6,714) ACN,AC1,AC2,AC3,AC4,AC5
      WRITE (6,721) ATN,AT1,AT2,AT3,AT4,AT5
      WRITE (6,715) TTLDN,TTLD1,TTLD2,TTLD3,TTLD4,TTLD5
      WRITE (6,716) TTLIN,TTLI1,TTLI2,TTLI3,TTLI4,TTLI5
      WRITE (6,717) SATN,SAT1,SAT2,SAT3,SAT4,SAT5
      WRITE (6,718) CSYSDN,CSYSD1,CSYSD2,CSYSD3,CSYSD4,CSYSD5
      WRITE (6,719) CSYSIN,CSYSI1,CSYSI2,CSYSI3,CSYSI4,CSYSI5
      WRITE (6,630) DIC(K),SIC(K)
      WRITE (6,610) CKD(K),CKS(K)
  600 FORMAT (42X,28HCOST IMPEDANCE WITHOUT STS =,F9.4/)
  610 FORMAT (26X,34HCOST IMPEDANCE RATIOS:     DIRECT=,F7.4,
     X12X,8HVIA STS=,F7.4/)
  630 FORMAT(/26X,34HCOST IMPEDANCE WITH STS:   DIRECT=,F7.4,12X,
     X8HVIA STS=,F7.4)
  650 FORMAT (20X,80H*****************************COST IMPEDANCE SUMMARY
     X*****************************/)
  710 FORMAT (15X,9HCOMPONENT,24X,6HNO STS,5X,4HSTS1,6X,4HSTS2,6X,4HSTS
     X,6X,4HSTS4,  6X, 4HSTS5)
  711 FORMAT (15X,14HACCESS HIGHWAY,16X,6F10.4)
  712 FORMAT (15X,19HCIRCULATION ROADWAY,11X,6F10.4)
  713 FORMAT (15X,19HAIRPORT PARKING LOT,11X,6F10.4)
  714 FORMAT (15X,19HAIRPORT CURB SPACES,11X,6F10.4)
  715 FORMAT (15X,23HTOTAL DOMESTIC TERMINAL,7X,6F10.4)
  716 FORMAT (15X, 28HTOTAL INTERNATIONAL TERMINAL,2X,6F10.4)
  717 FORMAT (15X,21HCOST PER STS TERMINAL,9X,6F10.4)
  718 FORMAT (15X,21HTOTAL DOMESTIC SYSTEM,9X,6F10.4)
  719 FORMAT (15X,26HTOTAL INTERNATIONAL SYSTEM,4X,6F10.4)
  720 FORMAT (49X,23HCAPTIAL COST COMPONENTS)
  721 FORMAT (15X,16HAIRPORT TERMINAL,14X,6F10.4)
  313 CONTINUE
      RETURN
      END

$ENTRY
```

TRAFFIC INTENSITIES PROGRAM

APPENDIX C

An auxiliary program is supplied with the FASTSEM package; its purpose is to calculate the traffic intensities ZEP, ZIP, ZOP, ZUP, ZAT, ZEB, ZEC, ZEF and ZEG required as input data by both FASTSEM programs.

Running the auxiliary program is a straightforward process. Input data required is illustrated in Figure C1. The same values should be used as in the FASTSEM program. Input data are punched according to format 8F10.5, as required by the main programs.

Two forms of output are used by this auxiliary program. First, cards are punched with the proper format for insertion in the main programs' data deck. Secondly, the output is printed by the on-line printer. Figure C2 shows a typical job and its output using the values of Figure C1 as input.

New runs of the intensities program need to be made only when any of the input parameters of Figure C1 are changed.

3.	.4	4500.	800.	50.	10.	2.	8.
4.	1864.	3.	3.	.6	.6	2.	1080.
360.	1864.						
3600.	3600.	3600.	2400.	2400.			
12426.	12426.	12426.	6834.	6834.			

Sensitivity Program Data Deck Listing

FIGURE C-1

```
C     ------------------------------------------------------------------
C     A PROGRAM TO CALCULATE TRAFFIC INTENSITIES FOR SIS EVALUATIONS
C     ------------------------------------------------------------------
      DIMENSION CAA(5), ZEP(5), ZIP(5), ZOP(5), ZUP(5), ZEF(5), Q(5)
C     ------------------------------------------------------------------
C     READ DATA
C     ------------------------------------------------------------------
   10 FORMAT (2X,9F10.4,I4)
   11 FORMAT (///7X,3HZEP,7X,3HZIP,7X,    3HZOP,7X,  3HZUP,    7X,3HZAT,
     X      7X,3HZEB, 7X,  3HZEC,  7X, 3HZEF,   7X, 3HZEG,   5X, 1HK/)
   12 FORMAT (5F10.5)
   13 FORMAT (8F10.5)
   14 FORMAT(8X,9F8.4/)
   15 FORMAT (1H1)
      READ (5,13) ALPHA,B,CA,CPS,CSA,CSS,EAC,ECA,ECS,QA,RHO,RHOS,T1A,T1S
     1,TC,UA,US,QS
      READ (5,12) (CAA(J),J=1,5)
      READ (5,12) (Q(J),J=1,5)
C     ------------------------------------------------------------------
C     COMPUTE INTENSITIES
C     ------------------------------------------------------------------
      DO 30 K=1,5
      ZEP(K)=Q(K)/(EAC*CA)
      ZIP(K)=Q(K)*T1A/(UA*EAC)
      ZOP(K)=TC*Q(K)*(1.-T1A)/(ECA*60.*CSA)
      ZUP(K)=Q(K)/(RHO*CAA(K))
      ZAT=QS*T1S/(US*EAC)
      ZEB=(QS*TC*(1.-T1S))/(ECS*60.*CSS)
      ZEC=QS/(RHOS*CPS)
      ZEF(K)=Q(K)/(RHO*CAA(K))
      ZEG=(QS*T1S)/(US*EAC)
   30 CONTINUE
C     ------------------------------------------------------------------
C     WRITE DATA, INTENSITIES AND PUNCH INTENSITIES
C     ------------------------------------------------------------------
      WRITE (6,11)
      DO 50 K=1,5
      WRITE(6,10) ZEP(K), ZIP(K), ZOP(K), ZUP(K), ZAT, ZEB, ZEC,
     1ZEF(K), ZEG,K
      WRITE (7,12) ZEP(K),ZIP(K),ZOP(K),ZUP(K),ZAT,ZEB,ZEC,ZEF(K),ZEG
   50 CONTINUE
      WRITE (6,15)
      STOP
```

Traffic Intensities Program and Data

FIGURE C-2.

ZEP	ZIP	ZOP	ZUP	ZAT	ZEB	ZEC	ZEF	ZEG	K
1.3807	3.4517	0.4142	1.1506	1.5533	0.6213	0.7767	1.1506	1.5533	1
1.3807	3.4517	0.4142	1.1506	1.5533	0.6213	0.7767	1.1506	1.5533	2
1.3807	3.4517	0.4142	1.1506	1.5533	0.6213	0.7767	1.1506	1.5533	3
0.7593	1.8983	0.2278	0.9492	1.5533	0.6213	0.7767	0.9492	1.5533	4
0.7593	1.8983	0.2278	0.9492	1.5533	0.6213	0.7767	0.9492	1.5533	5

21816

FIGURE C-2 continued