COPY
ACD-
32092
2

FEDERAL AVIATION ADMINISTRATION

MAY 11 1992

FAA WJH Technical Center
00093311

TECHNICAL CENTER LIBRARY
ATLANTIC CITY INT'L ARPRT, NJ 08405

DOT/FAA/CT-ACD32092/2

ATC DATA LINK TESTBED
EXTERNAL INTERFACE DEFINITIONS

George Chandler

March 19, 1992

Engineering, Research, and Development Service
Concepts Analysis Division
FAA Technical Center
Atlantic City International Airport, N.J. 08405

MEMORANDUM

To: Interested Parties
Subject: ATC Data Link Testbed External Interface Definitions Document
Date: 13 March 1992

Attached is version 8.80 of the ATC Data Link Testbed External Interface Definitions document. The Revision History section lists the portions of the document having significant changes from previous versions.

Please note that this is an engineering working level type document subject to frequent and unannounced changes/additions. For configuration management purposes, Data Link Testbed test plans should reference the version of this interface document that is relevant to the particular testing involved.

George Chandler
ACD-320A

ATC Data Link Testbed
External Interface Definition
Table Of Contents

-- Revision History
A2 VAX/Motorola External Interfaces
- A2.0 Overview of ATC Data Link Testbed
  - A2.0.1 Flight Simulator Interface Overview
  - A2.0.2 Target Generation Facility (TGF) Interface Overview
  - A2.0.3 ISSS Prototype Interface Overview
  - A2.0.4 DATAS Interface Overview
  - A2.0.5 NAS Interfacility Interface Overview
- A2.1 Motorola <==> Flight Simulator "Link" Level Interface Definition
  - A2.1.0 Description Of "Link" Level Interface
  - A2.1.1 Data Message Format
    - A2.1.1.1 Data Message Format For Non-DLAC Messages
    - A2.1.1.2 Data Message Format For DLAC Encoded/Decoded Messages
  - A2.1.2 Status Message Format
  - A2.1.3 Acknowledgement Message Format
- A2.2 Motorola <==> NSSF TGF "Link" Level Interface Definition
  - A2.2.0 Description Of "Link" Level Interface
  - A2.2.1 Data Message Format
  - A2.2.2 Status Message Format
  - A2.2.3 Acknowledgement Message Format
- A2.3 Motorola <==> ISSS Prototype "Link" Level Interface Definition
  - A2.3.0 Description Of "Link" Level Interface
  - A2.3.1 Data Message Format
  - A2.3.2 Status Message Format
  - A2.3.3 Acknowledgement Message Format
- A2.4 Motorola <==> DATAS "Link" Level Interface Definition
  - A2.4.0 Description Of "Link" Level Interface
  - A2.4.1 Data Message Format
  - A2.4.2 Status Message Format
  - A2.4.3 Acknowledgement Message Format
- A2.5 Motorola <==> VAX "Link" Level Interface Definition
  - A2.5.0 Description Of "Link" Level Interface
  - A2.5.1 Data Message Format
  - A2.5.2 Status Message Format
  - A2.5.3 Acknowledgement Message Format

A3 Interface Application Message Formats
- A3.0 ATC Sequence Numbers
- A3.1 Motorola <==> Flight Simulator Application Message Formats
  - A3.1.1 En-Route ATC Services
    - A3.1.1.1 Motorola ==> Simulator Messages
      - A3.1.1.1.1 ATC Service Initiation
      - A3.1.1.1.2 Control/Status
      - A3.1.1.1.3 ATC Service Response
    - A3.1.1.2 Simulator ==> Motorola Messages
      - A3.1.1.2.1 Pilot Response
      - A3.1.1.2.2 Control/Status
      - A3.1.1.2.3 Emergency Communications Downlink (CD) ATC Service Initiation
  - A3.1.2 Terminal ATC Services

A3.1.2.1 Motorola ==> Simulator Messages
A3.1.2.1.1 Initial Contact (IC/AR) ATC Service Initiation
A3.1.2.1.2 Terminal Information (TI) ATC Service Initiation
A3.1.2.1.3 Menu Text (MT) ATC Service Initiation
A3.1.2.1.4 Transfer of Control (TC) ATC Service Initiation
A3.1.2.1.5 Free Text (FT) ATC Service Initiation
A3.1.2.1.6 Control/Status
A3.1.2.2 Simulator ==> Motorola Messages
A3.1.2.2.1 Initial Contact (IC/AR) ATC Service Response
A3.1.2.2.2 Terminal Information (TI) ATC Service Response
A3.1.2.2.3 Menu Text (MT) ATC Service Response
A3.1.2.2.4 Transfer of Control (TC) ATC Service Response
A3.1.2.2.5 Free Text (FT) ATC Service Response
A3.1.2.2.6 Control/Status
A3.1.3 Weather Products
A3.1.3.1 Motorola ==> Simulator Messages
A3.1.3.1.1 Motorola ==> Simulator Weather Product Data
A3.1.3.2 Simulator ==> Motorola Messages
A3.1.3.2.1 Simulator ==> Motorola WX Product Request
A3.1.3.2.2 Simulator ==> Motorola Pilot Report
A3.1.4 Navigation Data Messages
A3.1.4.1 Motorola ==> Simulator Messages
A3.1.4.1.1 Initialization Message
A3.1.4.1.2 Change-Of-Status Message
A3.1.4.1.3 Sim-Time-Change Message
A3.1.4.1.4 Clear Text Message
A3.1.4.2 Simulator ==> Motorola Messages
A3.1.4.2.1 Beacon Change Message
A3.1.4.2.2 Ident Message
A3.1.4.2.3 Push-To-Talk-On-Off Message
A3.1.4.2.4 Communications Frequency Message
A3.1.4.2.5 Extended-Lat-Long-Aircraft Update Message
A3.1.4.2.6 Extended X/Y Aircraft-Update Message
A3.1.4.2.6 Clear Text Message
A3.2 Motorola <==> NSSF Target Generation Facility Application Messages
A3.2.1 Motorola <==> NSSF TGF Interface #1 Messages
A3.2.1.1 NSSF TGF Interface #1 ==> Motorola Messages
A3.2.1.1.1 FP Flight Plan Message
A3.2.1.1.2 TR Time Synchronization Message
A3.2.2 Motorola <==> NSSF TGF Interface #2 Messages
A3.2.2.1 Motorola ==> NSSF TGF Interface #2 Messages
A3.2.2.1.1 Uplink ATC Service Initiation Message
A3.2.2.1.2 Downlink ATC Service Response Message
A3.2.2.1.3 Motorola ==> TGF Aircraft Update Message
A3.2.2.1.4 ATC Service Status Message
A3.2.2.1.5 Auto-Wilco Option Select Message
A3.2.2.1.6 TC Handoff of ATC Service Option Select Message
A3.2.2.2 NSSF TGF Interface #2 ==> Motorola Messages
A3.2.2.2.1 System Initialization Message
A3.2.2.2.2 Time Synchronization Message
A3.2.2.2.3 Downlink ATC Service Initiation Message
A3.2.2.2.4 Uplink ATC Service Response Message
A3.2.2.2.5 TGF ==> Motorola Aircraft Update Message
A3.2.2.2.6 TGF ==> Motorola Aircraft Flight Plan Message

A3.3 Motorola <==> ISSS Prototype Application Messages
A3.4 Motorola <==> DATAS Application Messages
A3.5 Motorola <==> Host Application Message Formats
A3.5.1 NAS TR Message
A3.5.1.1 Host ==> Motorola Track Initiation TR Message
A3.5.1.2 Host ==> Motorola Time Synchronization TR Message
A3.5.1.3 Host ==> Motorola Track Cancellation TR Message
A3.5.1.4 Host ==> Motorola Sim-Tape Number Archive
A3.5.1.5 Host ==> Motorola Test Run Initialize
A3.5.2 NAS DT Message
A3.5.3 NAS GI Message
A3.5.4 NAS DL Message
A3.5.4.1 Host => Motorola DL Messages
A3.5.4.1.1 NAS DL ATC Service Initiation
A3.5.4.1.2 NAS DL Control/Status
A3.5.4.1.3 NAS DL ATC Service Response
A3.5.4.2 Motorola => Host DL Messages
A3.5.4.2.1 NAS DL PVD/List Display
A3.5.4.2.2 NAS DL Control/Status
A3.5.4.2.3 NAS DL Emergency Communications Downlink (CD) ATC Service Initiation
A3.6 Motorola <==> ARTS-IIIA Application Message Formats
A3.6.1 NAS TR Message
A3.6.2 NAS DL Message
A3.6.2.1 ARTS-IIIA => Motorola DL Messages
A3.6.2.1.1 Initial Contact (IC) ATC Service Response (Original, Aircraft Initiated Version)
A3.6.2.1.2 Initial Contact (IC/AR) ATC Service Initiation (Later, Ground Initiated Version)
A3.6.2.1.3 Terminal Information (TI) ATC Service Initiation
A3.6.2.1.4 Menu Text (MT) ATC Service Initiation
A3.6.2.1.5 Transfer of Control (TC) ATC Service Initiation
A3.6.2.1.6 Free Text (FT) ATC Service Initiation
A3.6.2.1.7 NAS DL Control/Status
A3.6.2.2 Motorola => ARTS-IIIA DL Messages
A3.6.2.2.1 Initial Contact (IC) ATC Service Initiation (Original, Aircraft Initiated Version)
A3.6.2.2.2 Initial Contact (IC/AR) ATC Service Response (Later, Ground Initiated Version)
A3.6.2.2.3 Terminal Information (TI) ATC Service Response
A3.6.2.2.4 Menu Text (MT) ATC Service Response
A3.6.2.2.5 Transfer of Control (TC) ATC Service Response
A3.6.2.2.6 Free Text (FT) ATC Service Response
A3.6.2.2.7 NAS DL Control/Status

Revision History

Version 8.80 13 March 1992

General

A2.*.0	Changed unused bytes in link level Acknowledgement and Status messages from 0XFF to 0X20.
A2.*.0	Added description of checksum computation
A2.5.2	Added Status I/O port coding in message type field
A3.0	Added description of use of ATC sequence numbers
A3.2.2	Added TGF Data Link message definitions
A3.5.4.1.1	Added list of recognizable phrases for TGF applications
A3.6.2.1.3	Added list of recognizable phrases for TGF applications
A3.6.2.1.4	Added list of recognizable phrases for TGF applications
A3.6.2.1.6	Added list of recognizable phrases for TGF applications

Version 7.70 17 January 1991

General

First baseline version split off from main VAX ATC software document
Major reorganization for ease of referencing specific interfaces
Index added
Added brief overviews of system and individual interfaces
Revised VAX<==>Motorola link level message formats
Added "stubs" for ISSS Prototype and DATAS interfaces

En-Route ATC Services

ATC service cancellation added
DYSIM simulator navigation messages revised
Added simulation start TR message

Terminal ATC Services

Initial Contact via TC WILCO option added
ATC service cancellation revised

Flight Simulators

Revised Navigation interface DYSIM mode to be as close as possible to NSSF mode
DLAC message formats defined
Terminal Initial Contact via TC WILCO option added
En-Route ATC service cancellation added
Terminal ATC service cancellation revised
Added Motorola==>simulator status message advising of error in previous simulator message

A2 VAX/Motorola External Interfaces

Sections A2 and A3 of the VAX ATC Data Link Documentation is intended to serve as a stand-alone description of the external interfaces to the VAX/Motorola Ground Data Link Processor element of the FAA Technical Center ATC Data Link Testbed. As all of the external interfaces are covered in this one document, the document is organized such that personnel interested in any specific interface can limit their review of the document to those sections relevant to that interface. For example, personnel interested in the flight simulator interfaces should review, in order, the following paragraphs, with associated sub-paragraphs:

A2.0 Overview of ATC Data Link Testbed
A2.0.1 Flight Simulator Interface Overview
A2.1 Motorola <==> Flight Simulator "Link" Level Interface Def
A3.0 ATC Sequence Numbers
A3.1 Motorola <==> Flight Simulator Application Message Fmts

A2.0 Overview of ATC Data Link Testbed

The ATC Data Link Testbed, located at the FAA Technical Center, is an R&D tool utilized to provide a realistic simulation, from the perspective of air traffic controllers and flight simulator pilots, in order to evaluate the effectiveness of data link services in an air traffic control environment. As an R&D tool, the testbed is not intended to be an exact duplication of a fielded NAS air traffic control system, but rather is oriented towards those NAS elements having the most impact on ATC controller and pilot interaction.

Currently, the testbed is configured to operate in either an En-Route ATC environment, centered about the ARRTC Host computer system and CDC display lab, or in a Terminal ATC environment, centered about the ARTS-IIIA computer system and DEDS display lab. Work is under way to eventually tie the En-Route and Terminal portions together into an integrated En-Route/Terminal testbed.

For either En-Route or Terminal operations, two simulation modes of operation are utilized. For the highest degree of simulation fidelity, the assets of the National Simulation Support Facility (NSSF) are utilized for radar track generation and non flight simulator pilot support. As the NSSF is utilized for many programs within the Tech Center, time on same is very limited, and must be scheduled months or years in advance. Hence, for initial ATC service evaluation, or other testing not requiring the highest degree of fidelity, a second simulation mode is employed, utilizing the built in field training capabilities of the Host (DYSIM) or ARTS (ETG) computer systems to provide track generation and pilot support.

Figures A2-1 and A2-2 are basic "block diagrams" of the DYSIM and NSSF simulation modes for the En-Route portion of the testbed. Note that these figures are not accurate system schematic diagrams, but are intended only to show basic signal flows. These diagrams and the following descriptions of same apply also to the Terminal ARTS-IIIA environment if the "En-Route ARRTC Host", "CDC display lab", and "DYSIM" labels are replaced by "Terminal ARTS-IIIA", "DEDS display lab", and "ETG" respectively.

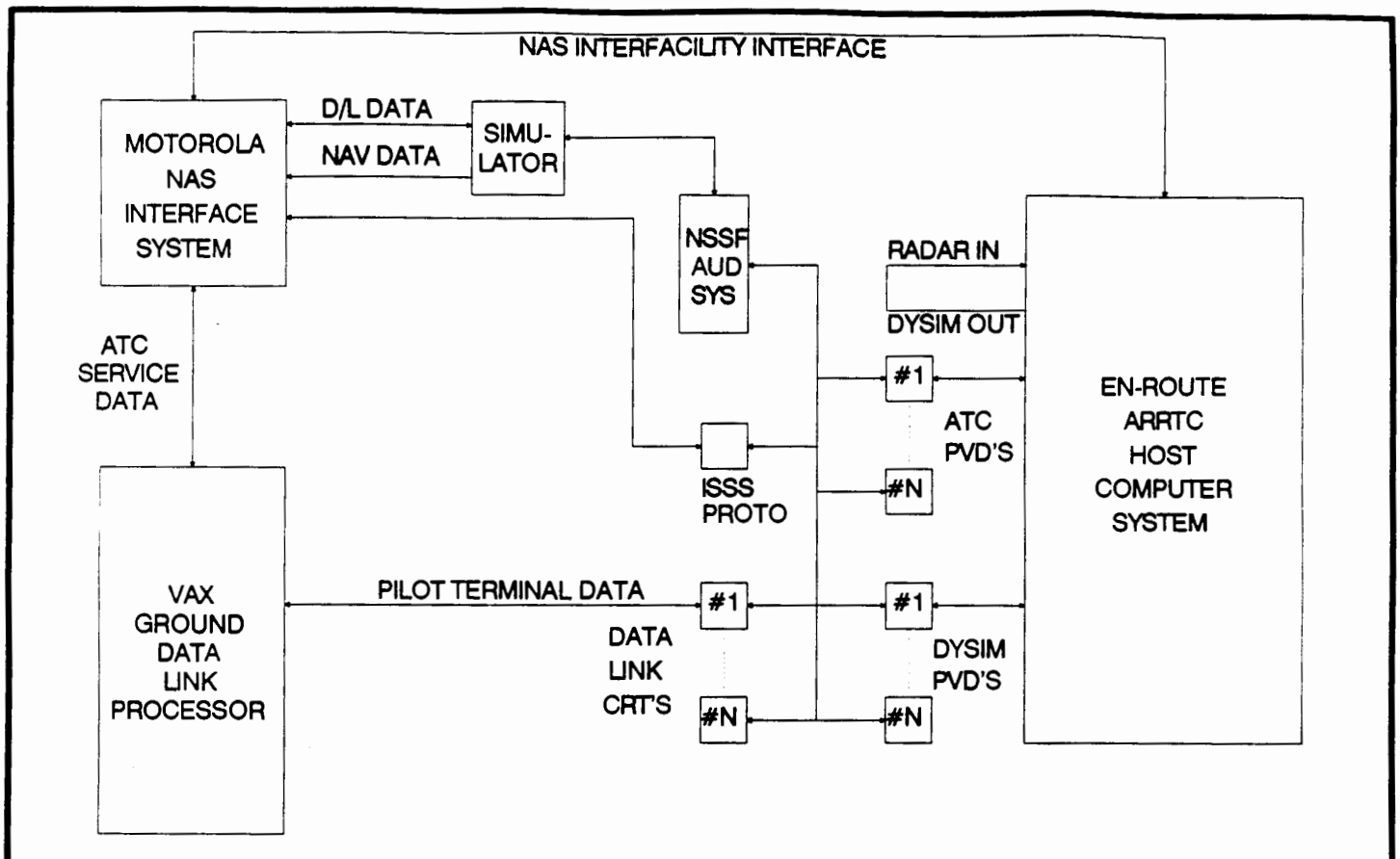

FIGURE A2-1: EN-ROUTE/DYSIM LOGICAL SIGNAL FLOW

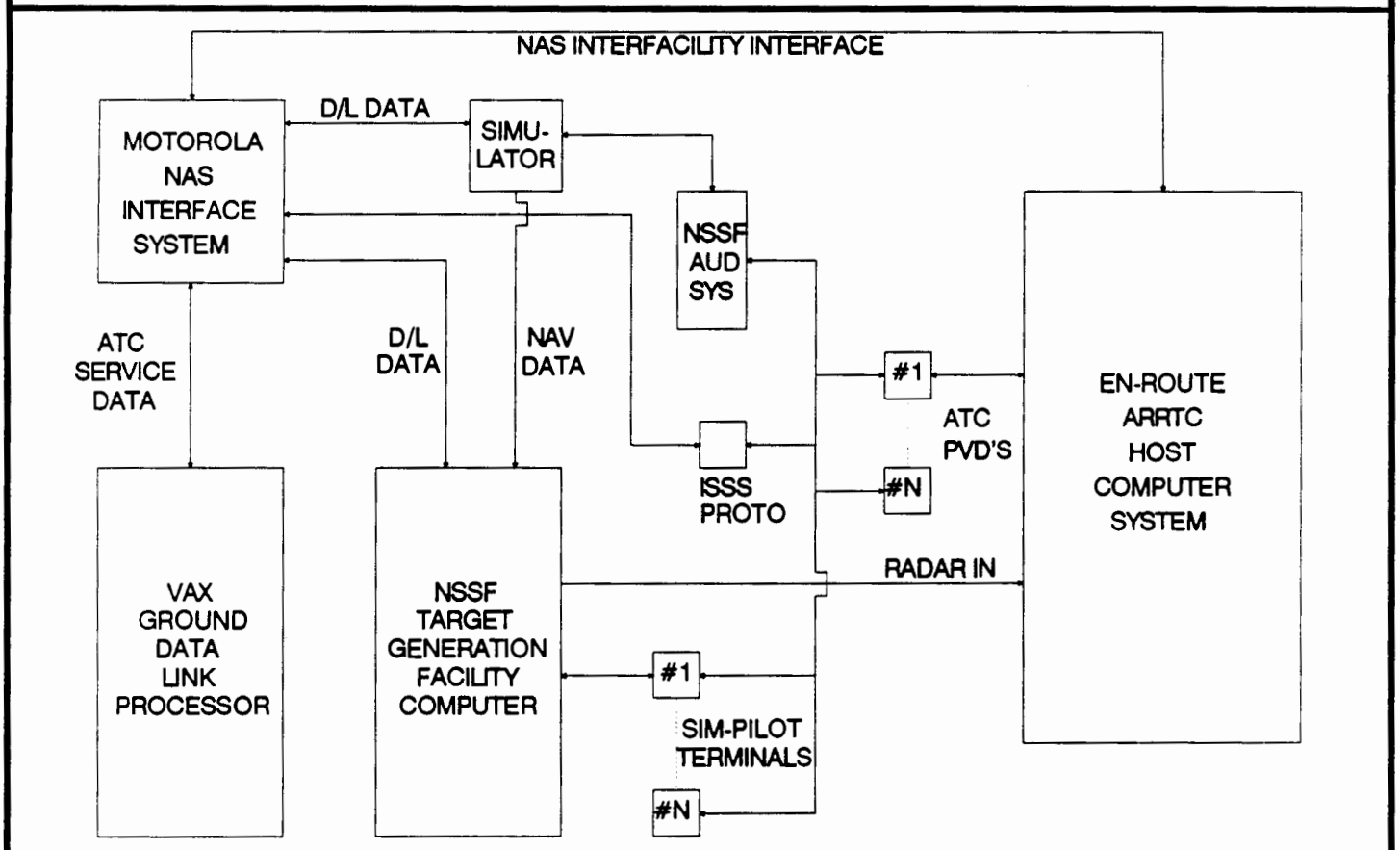

FIGURE A2-2 EN-ROUTE/NSSF LOGICAL SIGNAL FLOW

In the DYSIM mode of operation, each ATC controller sector position in the CDC display lab is paired with a DYSIM pilot position within the same lab, utilizing identical type hardware. Simulated radio links, utilizing the NSSF audio system, connect each controller/pilot combination. The Host DYSIM training program is utilized to generate radar tracks on the controllers PVD's, and to enable the DYSIM pilots to make heading, altitude, airspeed, etc. changes to aircraft tracks in response to instructions from the controllers. For a typical simulation test run, a predefined scenario of aircraft flight plans and track starts is loaded into the Host via a Sim Tape so that controller performance can be realistically and repetitively evaluated. With respect to data link operations, the Host is interfaced to a VAX-11/750 Ground Data Link Processor (GDLP) via a VME 68020 based Motorola NAS Interface System. The VAX GDLP in turn is interfaced to ANSI CRT data link terminals, physically located at each DYSIM pilot position. During the course of a simulation run, each ATC controller can issue data link services to his/her DYSIM pilot. The DYSIM pilot utilizes the data link CRT to receive and acknowledge data link services, and enters all data link commanded aircraft state data changes into the DYSIM terminal. Any aircraft flight simulators utilized for a given test run are interfaced to the Motorola system for navigation and data link functions, and to the NSSF audio system for audio functions.

In the NSSF mode of operation, each ATC controller sector position in the CDC display lab is paired with a group of Sim-Pilots located in the NSSF Sim-Pilot lab. Simulated radio links, utilizing the NSSF audio system, connect each controller/pilot sector combination. The NSSF Target Generation Facility (TGF) is utilized to generate radar track data, based upon predefined test scenarios, which is routed to the Host computer system. The TGF drives an integrated CRT display for each Sim-Pilot that incorporates the functions of both aircraft control and data link interface, and assigns the aircraft currently within a given sector equally among the Sim-Pilots assigned to that sector. The Sim-Pilots can receive instructions for aircraft control either via voice, or via the data link interface function within the Sim-Pilot terminal, and can effect aircraft state changes from that terminal. Any aircraft flight simulators utilized for a given testing run are interfaced to the TGF computer for navigation data functions, to the Motorola system for data link functions, and to the NSSF audio system for audio functions.

A2.0.1 Flight Simulator Interface Overview

Each flight simulator has three interfaces to the ATC data link testbed for navigation, data link, and audio functions.

The navigation interface is utilized for the simulator to periodically update the testbed as to its current position (latitude, longitude, airspeed, altitude, heading, etc), and to coordinate with the testbed on other relevant items such as test run start/stop, NAS time, aircraft AID, and ident. When the testbed is running in NSSF mode, the simulator navigation interface is defined per the National Airspace System Simulation Support Facility To Cockpit Simulator Software Interface Control Document, dated October 12 1990, and is connected to the TGF computer which converts the simulator input data into radar track data which is routed to the Host computer system. When the testbed is running in DYSIM mode, the simulator navigation interface is defined per the above NSSF document (with minor changes as described in section A3 of this document), and is connected to the

Motorola NAS Interface System which converts the simulator input data into DYSIM update information which is routed to the Host computer system via the NAS Interfacility interface.

The simulator data link interface is connected to the Motorola NAS Interface System in either DYSIM or NSSF operational modes. All ATC controller initiated data link services are routed from the Host computer system to the Motorola system via the NAS Interfacility interface, then are routed by the Motorola to the VAX GDLP. If the data link service is directed to an aircraft AID correlating to a flight simulator, the VAX generates the appropriate service initiation message, and sends it back to the Motorola which in turn routes it to the proper simulator. The simulator, in turn, sends the pilot response to the ATC service to the Motorola which routes same back to the VAX. The VAX then generates the appropriate response message to the ATC controller and forwards it to the Motorola, which then relays it back to the Host. For aircraft initiated data link services, the same sequence of events applies in reverse. For non-ATC, weather related data link services, the Motorola system incorporates a number of "canned" weather products (defined to support specific testing scenarios) which are available to the simulators upon request. Link level interface messages have been defined below to accomodate either straight ASCII text or DLAC encoding (compatible with Version 1.2 of the Massachusetts Institute of Technology DLAC Decoder Software, authored by Robert D. Grappel, dated October 1991; dictionaries to be negotiated for each series of tests) for ATC and weather data link services and responses.

The simulator audio interface is connected to the NSSF audio system, and consists of a pilot audio channel, channel switching and PTT data, and test coordination audio channels. This interface has not as yet been defined.

A2.0.2 Target Generation Facility (TGF) Interface Overview

When the testbed is operating in NSSF mode, the TGF Sim-Pilot terminals are utilized for aircraft control and data link interaction for aircraft that are being simulated by the TGF (as opposed to flight simulators or live aircraft). All ATC controller initiated data link services are routed from the Host computer system to the Motorola system via the NAS Interfacility interface, then are routed by the Motorola to the VAX GDLP. If the data link service is directed to an aircraft AID being simulated by the TGF, the VAX generates an ASCII display text message for the Sim-Pilot and sends it to the Motorola, which then forwards it to the TGF computer. The TGF then sends the display text message to the Sim-Pilot terminal which has been assigned the aircraft to which the data link service has been directed. When the Sim-Pilot responds to the data link service, the TGF relays the response data back through the Motorola system to the VAX. If a data link service which has been WILCO'd by a Sim-Pilot is either a structured service containg aircraft change data (altitude assignment, frequency change, etc.), or else is a menu/free text message that the VAX is able to decode as containing aircraft change data, the VAX will generate an aircraft update data message and send same to the TGF through the Motorola to directly effect the commanded aircraft state change without need for Sim-Pilot manual update. The Sim-Pilot display text message will be annotated to show which por-

tion(s) of the message do not require Sim-Pilot manual update upon WILCO.

For Terminal/NSSF testbed operations only, a second TGF computer interface is provided to the Motorola NAS Interface System that is not shown in Figure A2-2. This second interface is utilized to relay flight plans from the TGF computer to the ARTS-IIIA.

A2.0.3 ISSS Prototype Interface Overview

MITRE/FAATC has developed a stand-alone Integrated Sector Suite System (ISSS) prototype utilizing a Sun workstation with special video driver card, and a 20" color CRT display. This prototype has been utilized for early evaluation of ATC data link services in the ISSS environment. It is planned to integrate this ISSS prototype into the overall En-Route testbed environment, utilizing the Motorola system to relay data between the prototype and the Host computer system.

A2.0.4 DATAS Interface Overview

A Motorola NAS Interface System interface port has been allocated for possible future use with the Data Link and Transponder Analysis System (DATAS). If utilized, this DATAS interface will provide a gateway to the Data Link Processor (DLP) for live weather or live aircraft testbed applications.

A2.0.5 NAS Interfacility Interface Overview

Operational Host and ARTS-IIIA computer systems each contain at least one NAS Interfacility port, which are utilized to link En-Route Host systems to neighboring ARTS Terminal systems. These NAS ports operate in a 2400 baud, serial, EBCDIC encoded mode, utilizing special NAS message protocols. Within the Data Link Testbed, the Motorola NAS Interface System is currently linked to the Host and ARTS-IIIA computer systems via these NAS Interfacility ports for data link communications with these two systems. Currently the testbed runs separate and independent En-Route and Terminal testing. At such time as the testbed is configured to operate in a combined En-Route and Terminal mode, the Motorola system will interface to the Host during combined testing, and the Host will serve as a relay for Motorola<==>Arts-IIA messages. This arrangement is necessary because the testbed ARTS-IIIA has only one NAS Interfacility port, and this port must be directly connected to the Host for combined En-Route/Terminal testing applications.

A2.1 Motorola <==> Flight Simulator "Link" Level Interface Definition

The Motorola NAS Interface System communicates with the flight simulators via RS-232, full duplex, asynchronous ports, employing hardware handshaking. Communications characteristics are 9600 baud, no parity, 8 data bits, 1 stop bit (9600 N81). For each simulator, one interface port is utilized for data link applications (utilizing the "link" level interface detailed below), and a second interface port is utilized for navigation data (utilizing straight ASCII text). Note that this second, navigation data port is routed to the TGF during testbed operations utilizing NSSF.

A2.1.0 Description Of "Link" Level Interface

In order to provide elementary communications error detection and recovery capabilities and to facilitate Motorola data flow con-

trol, an elementary "ACK-only" interface protocol is utilized for the Motorola <==> Flight Simulator data link application interfaces. Note that the Motorola <==> Flight Simulator navigation data interfaces do not utilize this protocol, but rather operate in straight ASCII.

The basic principle behind this ack-only protocol is that a data originating interface sends a Data or Status type message to a data destination interface, utilizing the message formats below (note that for a Data type message, the contents of the data field within the message correspond to one of the application messages listed in section A3 of this document). The destination interface decodes the Data or Status message, and if the contents of same appear to be uncorrupted (proper start byte, word count, checksum, end byte), the destination interface returns an Acknowledgement message to the originating interface. If the destination interface detects a problem with the Data or Status message, it disregards that message and returns nothing to the originating interface. If the originating interface does not receive an Acknowledgement message within a predefined (currently 4 seconds) period of time, it repeats transmission of the original Data or Status message. An originating interface may not initiate transmission of a Data or Status message to a destination interface prior to receipt of the Acknowledgement message for its last previous Data or Status message to that destination interface.

For each of the three message types, a checksum is computed on the message bytes beginning with the message type byte, and ending with the byte immediately preceding the first encoded checksum byte. The checksum is computed by adding together all of the included bytes, and utilizing the least significant byte of the result. This checksum byte is then encoded into two bytes to ensure the uniqueness of the message start and end bytes.

Two different Data message formats are defined. For messages incorporating DLAC encoding/decoding, the Data message data field must be encoded to accommodate DLAC non-ASCII characters while ensuring unique Data message start and end characters. For non-DLAC messages, the data field is not encoded in order to conserve data bandwidth.

A2.1.1 Data Message Format

A2.1.1.1 Data Message Format For Non-DLAC Messages

1 02H Start Byte

2 Message Type

- 24H - En-Route ATC service initiation message or Pilot response utilizing ASCII data
- 25H - Terminal ATC service initiation message or Pilot response utilizing ACSII data
- 26H - Motorola ==> simulator WX product or Pilot request for same utilizing ASCII data
- 27H - Simulator ==> Motorola PIREP utilizing ASCII data

3 Message Number of This Message (20H thru FFH)

4 Number of Data Bytes + 20H offset

5 Data Byte #1 (All Data Must Be ASCII Characters)

FAA WJH Technical Center
00093311

6 Data Byte #2
.
.
N+4 Data Byte #N
N+5 (MS nibble of hex checksum on bytes 2 thru (N+4)) + 40H offset
N+6 (LS nibble of hex checksum on bytes 2 thru (N+4)) + 40H offset
N+7 0DH Message End Byte

A2.1.1.2 Data Message Format For DLAC Encoded/Decoded Messages

1 02H Start Byte
2 Message Type
- 2AH - En-Route ATC service initiation message or Pilot response utilizing DLAC encoded data
- 2BH - Terminal ATC service initiation message or Pilot response utilizing DLAC encoded data
- 2CH - Motorola ==> simulator WX product or Pilot request for same utilizing DLAC encoded data
- 2DH - Simulator ==> Motorola PIREP utilizing DLAC encoded data

3 Message Number of This Message (20H thru FFH)
4 Number of Data Bytes + 20H offset
5 MS Nibble of Data Byte #1 + 40H
6 LS Nibble of Data Byte #1 + 40H
7 MS Nibble of Data Byte #2 + 40H
8 LS Nibble of Data Byte #2 + 40H
.
.
2N+3 MS Nibble of Data Byte #N + 40H
2N+4 LS Nibble of Data Byte #N + 40H
2N+5 (MS nibble of hex checksum on bytes 2 thru (2N+4)) + 40H offset
2N+6 (LS nibble of hex checksum on bytes 2 thru (2N+4)) + 40H offset
2N+7 0DH Message End Byte

A2.1.2 Status Message Format

1 02H Start Byte
2 23H Message Type
3 Message Number of This Message (20H thru FFH)
4 20H
5 Status Code
- 20H - Status test message; return Acknowledgement message only.

6 Message Number of Message on Which Status is Being Returned
7 (MS nibble of checksum on bytes 2 thru 6) + 40H offset
8 (LS nibble of checksum on bytes 2 thru 6) + 40H offset

9	0DH Message End Byte

A2.1.3 Acknowledgement Message Format

1	02H Start Byte
2	21H Message Type
3	Message Number of Message Being Acknowledged
4	20H
5	Status of Message Being acknowledged 20H message was bad 21H message was good
6	20H
7	(MS nibble of checksum on bytes 2 thru 6) + 40H offset
8	(LS nibble of checksum on bytes 2 thru 6) + 40H offset
9	0DH Message End Byte

A2.2 Motorola <==> NSSF TGF "Link" Level Interface Definition

The Motorola NAS Interface System communicates with the NSSF TGF computer via two RS-232, full duplex, asynchronous ports, employing hardware handshaking. One of these interface ports is utilized for data link applications, and utilizes the link level protocol described below. The second interface port is utilized for NAS flight plans during Terminal/NSSF testing only, and utilizes straight ASCII without the link level protocol described below. Communications characteristics for each port are 9600 baud, no parity, 8 data bits, 1 stop bit (9600 N81).

A2.2.0 Description Of "Link" Level Interface

In order to provide elementary communications error detection and recovery capabilities and to facilitate Motorola data flow control, an elementary "ACK-only" interface protocol is utilized for the Motorola <==> TGF data link interface. Note that the Motorola <==> TGF flight plan interface does not utilize this protocol, but rather operates in straight ASCII.

The basic principle behind this ack-only protocol is that a data originating interface sends a Data or Status type message to a data destination interface, utilizing the message formats below (note that for a Data type message, the contents of the data field within the message correspond to one of the application messages listed in section A3 of this document). The destination interface decodes the Data or Status message, and if the contents of same appear to be uncorrupted (proper start byte, word count, checksum, end byte), the destination interface returns an Acknowledgement message to the originating interface. If the destination interface detects a problem with the Data or Status message, it disregards that message and returns nothing to the originating interface. If the originating interface does not receive an Acknowledgement message within a predefined (currently 4 seconds) period of time, it repeats transmission of the original Data or Status message. An originating interface may not initiate transmission of a Data or Status message to a destination interface prior to receipt of the Acknowledgement message for its last previous Data or Status message to that destination interface.

For each of the three message types, a checksum is computed on the message bytes beginning with the message type byte, and ending

with the byte immediately preceding the first encoded checksum byte. The checksum is computed by adding together all of the included bytes, and utilizing the least significant byte of the result. This checksum byte is then encoded into two bytes to ensure the uniqueness of the message start and end bytes.

A2.2.1 Data Message Format

1	02H Start Byte
2	Message Type 24H Data Message
3	Message Number of This Message (20H thru FFH)
4	Number of Data Bytes + 20H offset
5	Data Byte #1 (All Data Must Be ASCII Characters)
6	Data Byte #2
.	
.	
N+4	Data Byte #N
N+5	(MS nibble of hex checksum on bytes 2 thru (N+4)) + 40H offset
N+6	(LS nibble of hex checksum on bytes 2 thru (N+4)) + 40H offset
N+7	0DH Message End Byte

A2.2.2 Status Message Format

1	02H Start Byte
2	Message Type 23H Status Message
3	Message Number of This Message (20H thru FFH)
4	20H
5	Status Code 20H - Status test message; return Acknowledgement message only.
6	Message Number of Message on Which Status is Being Returned
7	(MS nibble of checksum on bytes 2 thru 6) + 40H offset
8	(LS nibble of checksum on bytes 2 thru 6) + 40H offset
9	0DH Message End Byte

A2.2.3 Acknowledgement Message Format

1	02H Start Byte
2	Message Type 21H Acknowledgement Message
3	Message Number of Message Being Acknowledged
4	20H
5	Status of Message Being acknowledged 20H message was bad 21H message was good
6	20H
7	(MS nibble of checksum on bytes 2 thru 6) + 40H offset
8	(LS nibble of checksum on bytes 2 thru 6) + 40H offset

9 0DH Message End Byte

A2.3 Motorola <==> ISSS Prototype "Link" Level Interface Definition

The Motorola NAS Interface System communicates with the ISSS Prototype via an RS-232, full duplex, asynchronous port, employing hardware handshaking. Communications characteristics are 9600 baud, no parity, 8 data bits, 1 stop bit (9600 N81).

A2.3.0 Description Of "Link" Level Interface

In order to provide elementary communications error detection and recovery capabilities and to facilitate Motorola data flow control, an elementary "ACK-only" interface protocol is utilized for the Motorola <==> ISSS prototype interface.

The basic principle behind this ack-only protocol is that a data originating interface sends a Data or Status type message to a data destination interface, utilizing the message formats below (note that for a Data type message, the contents of the data field within the message correspond to one of the application messages listed in section A3 of this document). The destination interface decodes the Data or Status message, and if the contents of same appear to be uncorrupted (proper start byte, word count, checksum, end byte), the destination interface returns an Acknowledgement message to the originating interface. If the destination interface detects a problem with the Data or Status message, it disregards that message and returns nothing to the originating interface. If the originating interface does not receive an Acknowledgement message within a predefined (currently 4 seconds) period of time, it repeats transmission of the original Data or Status message. An originating interface may not initiate transmission of a Data or Status message to a destination interface prior to receipt of the Acknowledgement message for its last previous Data or Status message to that destination interface.

For each of the three message types, a checksum is computed on the message bytes beginning with the message type byte, and ending with the byte immediately preceding the first encoded checksum byte. The checksum is computed by adding together all of the included bytes, and utilizing the least significant byte of the result. This checksum byte is then encoded into two bytes to ensure the uniqueness of the message start and end bytes.

A2.3.1 Data Message Format

1	02H Start Byte
2	Message Type 24H Data Message
3	Message Number of This Message (20H thru FFH)
4	Number of Data Bytes + 20H offset
5	Data Byte #1 (All Data Must Be ASCII Characters)
6	Data Byte #2
.	
.	
N+4	Data Byte #N
N+5	(MS nibble of hex checksum on bytes 2 thru (N+4)) + 40H offset
N+6	(LS nibble of hex checksum on bytes 2 thru (N+4))

+ 40H offset
N+7 0DH Message End Byte

A2.3.2 Status Message Format

1 02H Start Byte
2 Message Type
23H Status Message
3 Message Number of This Message (20H thru FFH)
4 20H
5 Status Code
20H - Status test message; return Acknowledgement message only.
6 Message Number of Message on Which Status is Being Returned
7 (MS nibble of checksum on bytes 2 thru 6) + 40H offset
8 (LS nibble of checksum on bytes 2 thru 6) + 40H offset
9 0DH Message End Byte

A2.3.3 Acknowledgement Message Format

1 02H Start Byte
2 Message Type
21H Acknowledgement Message
3 Message Number of Message Being Acknowledged
4 20H
5 Status of Message Being acknowledged
20H message was bad
21H message was good
6 20H
7 (MS nibble of checksum on bytes 2 thru 6) + 40H offset
8 (LS nibble of checksum on bytes 2 thru 6) + 40H offset
9 0DH Message End Byte

A2.4 Motorola <==> DATAS "Link" Level Interface Definition

The Motorola NAS Interface System communicates with the DATAS via an RS-232, full duplex, asynchronous port, employing hardware handshaking. Communications characteristics are 9600 baud, no parity, 8 data bits, 1 stop bit (9600 N81).

A2.4.0 Description Of "Link" Level Interface

In order to provide elementary communications error detection and recovery capabilities and to facilitate Motorola data flow control, an elementary "ACK-only" interface protocol is utilized for the Motorola <==> DATAS interface.

The basic principle behind this ack-only protocol is that a data originating interface sends a Data or Status type message to a data destination interface, utilizing the message formats below (note that for a Data type message, the contents of the data field within the message correspond to one of the application messages listed in section A3 of this document). The destination interface decodes the Data or Status message, and if the contents of same appear to be

uncorrupted (proper start byte, word count, checksum, end byte), the destination interface returns an Acknowledgement message to the originating interface. If the destination interface detects a problem with the Data or Status message, it disregards that message and returns nothing to the originating interface. If the originating interface does not receive an Acknowledgement message within a predefined (currently 4 seconds) period of time, it repeats transmission of the original Data or Status message. An originating interface may not initiate transmission of a Data or Status message to a destination interface prior to receipt of the Acknowledgement message for its last previous Data or Status message to that destination interface.

For each of the three message types, a checksum is computed on the message bytes beginning with the message type byte, and ending with the byte immediately preceding the first encoded checksum byte. The checksum is computed by adding together all of the included bytes, and utilizing the least significant byte of the result. This checksum byte is then encoded into two bytes to ensure the uniqueness of the message start and end bytes.

A2.4.1 Data Message Format

1	02H Start Byte
2	Message Type 24H Data Message
3	Message Number of This Message (20H thru FFH)
4	Number of Data Bytes + 20H offset
5	Data Byte #1 (All Data Must Be ASCII Characters)
6	Data Byte #2
.	
.	
N+4	Data Byte #N
N+5	(MS nibble of hex checksum on bytes 2 thru (N+4)) + 40H offset
N+6	(LS nibble of hex checksum on bytes 2 thru (N+4)) + 40H offset
N+7	0DH Message End Byte

A2.4.2 Status Message Format

1	02H Start Byte
2	Message Type 23H Status Message
3	Message Number of This Message (20H thru FFH)
4	20H
5	Status Code 20H - Status test message; return Acknowledgement message only.
6	Message Number of Message on Which Status is Being Returned
7	(MS nibble of checksum on bytes 2 thru 6) + 40H offset
8	(LS nibble of checksum on bytes 2 thru 6) + 40H offset
9	0DH Message End Byte

A2.4.3 Acknowledgement Message Format

1	02H Start Byte
2	Message Type 21H Acknowledgement Message
3	Message Number of Message Being Acknowledged
4	20H
5	Status of Message Being acknowledged 20H message was bad 21H message was good
6	20H
7	(MS nibble of checksum on bytes 2 thru 6) + 40H offset
8	(LS nibble of checksum on bytes 2 thru 6) + 40H offset
9	0DH Message End Byte

A2.5 Motorola <==> VAX "Link" Level Interface Definition

The Motorola NAS Interface System communicates with the VAX via an RS-232, full duplex, asynchronous port, employing hardware handshaking. Communications characteristics are 9600 baud, no parity, 8 data bits, 1 stop bit (9600 N81).

A2.5.0 Description Of "Link" Level Interface

In order to provide elementary communications error detection and recovery capabilities and to facilitate Motorola data flow control, an elementary "ACK-only" interface protocol is utilized for the Motorola <==> VAX interface.

The basic principle behind this ack-only protocol is that a data originating interface sends a Data or Status type message to a data destination interface, utilizing the message formats below (note that for a Data type message, the contents of the data field within the message correspond to one of the application messages listed in section A3 of this document). The destination interface decodes the Data or Status message, and if the contents of same appear to be uncorrupted (proper start byte, word count, checksum, end byte), the destination interface returns an Acknowledgement message to the originating interface. If the destination interface detects a problem with the Data or Status message, it disregards that message and returns nothing to the originating interface. If the originating interface does not receive an Acknowledgement message within a predefined (currently 4 seconds) period of time, it repeats transmission of the original Data or Status message. An originating interface may not initiate transmission of a Data or Status message to a destination interface prior to receipt of the Acknowledgement message for its last previous Data or Status message to that destination interface.

For each of the three message types, a checksum is computed on the message bytes beginning with the message type byte, and ending with the byte immediately preceding the first encoded checksum byte. The checksum is computed by adding together all of the included bytes, and utilizing the least significant byte of the result. This checksum byte is then encoded into two bytes to ensure the uniqueness of the message start and end bytes.

Note that the message type field of the Data & Status messages

are encoded to reflect the ultimate source/destination of the message. This approach has been utilized to facilitate the Motorola relay of VAX messages to/from other interfaces.

A2.5.1 Data Message Format

```
1       02H Start Byte
2       Message Type
             MS Nibble - Message Origination/Destination:
                  2*H - Primary NAS Interfacility Port
                  3*H - Secondary NAS Interfacility Port
                  4*H - NSSF TGF Flight Plan Interface
                  5*H - NSSF TGF Data Link Interface
                  6*H - ISSS Prototype Interface
                  7*H - DATAS Interface
                  8*H - Flight Simulator #1
                  9*H - Flight Simulator #2
                  A*H - Flight Simulator #3
                  B*H - Flight Simulator #4
                  C*H - Flight Simulator #5
                  D*H - Flight Simulator #6
                  E*H - Flight Simulator #7
                  F*H - Flight Simulator #8
             LS Nibble - Dependent Upon Msg Source/Sink:
                  NAS Interfacility Port:
                       *4H - NAS TR message
                       *5H - NAS DT message
                       *6H - NAS GI message
                       *7H - NAS DL message
                       *8H - Undefined NAS message
                  TGF Data Link Interface:
                       *4H - Data message
                  ISSS Prototype Interface:
                       *4H - Data message
                  DATAS Interface:
                       *4H - Data message
                  Flight Simulator Interface:
                       *4H - En-Route ATC service init-
                             iation message or Pilot
                             response
                       *5H - Terminal ATC service init-
                             iation message or Pilot
                             response
                       *6H - Motorola ==> simulator WX
                             product or Pilot request for
                             same
                       *7H - Simulator ==> Motorola PIREP
3       Message Number of This Message (20H thru FFH)
4       Number of Data Bytes + 20H Offset
5       Data Byte #1 (All Data Must Be ASCII Characters)
6       Data Byte #2
.
.
N+4     Data Byte #N
N+5     (MS nibble of hex checksum on bytes 2 thru (N+4))
```

```
                    + 40H offset
N+6                 (LS nibble of hex checksum on bytes 2 thru (N+4))
                    + 40H offset
N+7                 0DH Message End Byte
```

A2.5.2 Status Message Format

```
1          02H Start Byte
2          Message Type
                MS Nibble - Message Origination/Destination:
                     2*H - Primary NAS Interfacility Port
                     3*H - Secondary NAS Interfacility Port
                     4*H - NSSF TGF Flight Plan Interface
                     5*H - NSSF TGF Data Link Interface
                     6*H - ISSS Prototype Interface
                     7*H - DATAS Interface
                     8*H - Flight Simulator #1
                     9*H - Flight Simulator #2
                     A*H - Flight Simulator #3
                     B*H - Flight Simulator #4
                     C*H - Flight Simulator #5
                     D*H - Flight Simulator #6
                     E*H - Flight Simulator #7
                     F*H - Flight Simulator #8
                LS Nibble - *3H
3          Message Number of This Message (20H thru FFH)
4          FFH
5          Status Code - Dependent Upon Msg Source/Sink:
                NAS Interfacility Port:
                          21H NAS DA msg received in response
                          NAS msg (everything AOK in NAS msg)
                          22H NAS DR msg received in response
                          NAS msg (error in contents of data
                          body of NAS msg)
                          23H NAS DX msg received in response
                          NAS msg (error in header of NAS
                          message, indicating probable xmsn
                          error between NAS and Motorola)
                     24H Motorola has sent same msg 5 times
                          to NAS without receiving NAS DA
                          message.
                TGF Data Link Interface:
                     24H Motorola has sent same msg 3 times
                          to TGF without receiving
                          Acknowledgement message.
                ISSS Prototype Interface:
                     24H Motorola has sent same msg 3 times
                          to ISSS Prototype without receiving
                          Acknowledgement message.
                DATAS Interface:
                     24H Motorola has sent same msg 3 times
                          to DATAS without receiving
                          Acknowledgement message.
                Flight Simulator Interface:
                     24H Motorola has sent same msg 3 times
```

to Flight Simulator without receiving Acknowledgement message.

6 Message Number of Message on Which Status is being Returned

7 (MS nibble of hex checksum on bytes 2 thru 6) + 40H offset

8 (LS nibble of hex checksum on bytes 2 thru 6) + 40H offset

9 0DH Message End Byte

A2.5.3 Acknowledgement Message Format

1 02H Start Byte

2 Message Type
21H Acknowledgement Message

3 Message Number of Message Being Acknowledged

4 FFH

5 Status of Message Being acknowledged
20H message was bad
21H message was good

6 FFH

7 (MS nibble of hex checksum on bytes 2 thru 6) + 40H offset

8 (LS nibble of hex checksum on bytes 2 thru 6) + 40H offset

8 0DH Message End Byte

A3 Interface Application Message Formats

A3.0 ATC Sequence Numbers

Many of the application message formats described throughout this section A3 include the parameter named "ATC Sequence Number". This numeric parameter, ranging from 000 thru 999, is utilized to "keep track" of an ATC service throughout its life. An ATC sequence number is assigned to a service by the entity originating the service. For example, if the ARTS-IIIA sends a transfer of communication ATC service to an aircraft, the ARTS_IIIA increments its internal sequence number counter, and assigns the resulting ATC sequence number to the new service. This unique sequence number is utilized by the VAX, TGF, Flight Simulator, etc to reference the particular service in subsequent response and status messages. When the ARTS issues its next ATC service, it again increments its internal counter, and assigns a different sequence number to that next service. When the ARTS internal counter exceeds its upper limit, the counter is "reset" to its lower limit, and the range of sequence numbers is reused. The allowable range of sequence numbers is large enough such that no two ARTS-IIIA ATC services will simultaneously exist with the same sequence number value.

ATC services can be initiated by many of the elements within the ATC Data Link Testbed, to include the ARTS-IIIA, HOST, VAX, TGF, ISSS Prototype, and Flight Simulators. In order to ease the task of identifying the original source of an ATC service, each of the initiating elements utilize a portion of the overall 000-999 ATC sequence number range. These ranges are allocated as follows:

ARTS-IIIA	000-099
HOST	200-399
VAX	400-499
ISSS	600-699
FLGHT SIM	800-899
TGF	900-999

A3.1 Motorola <==> Flight Simulator Application Message Formats

A3.1.1 En-Route ATC Services

A3.1.1.1 Motorola ==> Simulator Messages

A3.1.1.1.1 ATC Service Initiation

Upon receipt of a Host initiated En-Route ATC service, the VAX will relay to the appropriate flight simulator the Host generated ATC service initiation message defined in paragraph A3.5.4.1.1, starting with the "DL" NAS message type identifier.

A3.1.1.1.2 Control/Status

The following is a detailed description of the message format utilized by the VAX to send a control or status message back to a flight simulator. The "Posn" column represents the byte position in the message as sent to the VAX, starting with position #1

Bytes	Posn	Function
7	1-7	Aircraft AID, or ASCII blanks if not relevant
1	8	0X20 ASCII space
3	9-11	"XXX" Control/Status identifier
1	12	0X20 ASCII space

1 13 Control/Status action code

"T" - VAX has generated a "TIMEOUT" Pilot response to referenced ground initiated ATC service, and will not accept further simulator Pilot responses for that ATC service. This status message is only sent if Pilot timeout is considered to be a service terminating condition for the given test run.

"D" - Referenced flight simulator initiated ATC service has been delivered to ATC Controller

"C" - VAX has generated a "TIMEOUT" ATC Controller response to referenced flight simulator initiated ATC service.

"X" - VAX has received notice of the cancellation of referenced ground initiated ATC service, and will not accept further simulator Pilot responses for that service.

"P" - VAX has detected a problem with a simulator data link response or initiation message (invalid sequence number, etc).

N 14-(N+13) Specific control/status dependent data

(A) "T", "C", "D", "X" Action Codes:

Bytes	Posn	Function
1	14	0X20 ASCII space
3	15-17	VAX generated ATC sequence number for relevant ATC service

(A) "P" Action Code:

Bytes	Posn	Function
1	14	0X20 ASCII space
0-20	15-?	Readback of simulator initiated message, 20 characters maximum

A3.1.1.1.3 ATC Service Response

Upon receipt of the ATC controller response to a flight simulator initiated En-Route ATC service, the VAX will relay to the appropriate flight simulator the Host generated ATC service response message defined in paragraph A3.5.4.1.3, starting with the "DL" NAS message type identifier.

A3.1.1.2 Simulator ==> Motorola Messages

A3.1.1.2.1 Pilot Response

The following is a detailed description of the message format utilized to send a flight simulator pilot response for a given ATC service back to the VAX. The "Posn" column represents the byte position in the message as sent to the VAX, starting with position #1

Bytes	Posn	Function

```
1        1      Pilot Response to ATC Service
                 "W"  WILCO
                 "U"  UNABLE
                 "T"  TIMEOUT (non-operational response  used
                       only in testbed)
    1        2      (ASCII space 0X20)
    3        3-5    ATC sequence number of relevant ATC servic
***1         6      (ASCII space 0X20)
***3         7-9    3-Character current assigned altitude
```

*** NOTE: These fields are included *ONLY* in WILCO responses to TC Transfer of Control ATC services where the 3-digit current assigned altitude was included within the original service initiation message (see A3.5.4.1.1).

A3.1.1.2.2 Control/Status

The following is a detailed description of the message format utilized to send a flight simulator contol or status message back to the VAX. The "Posn" column represents the byte position in the message as sent to the VAX, starting with position #1

```
Bytes  Posn    Function
7      1-7     Aircraft AID, or ASCII blanks if not relevant
1        8     0X20 ASCII space
3      9-11    "XXX" Control/Status identifier
1       12     0X20 ASCII space
1       13     Control/Status action code
                "D" - Referenced ground initiated ATC
                      service has been delivered to Pilot
N   14-(N+13) Specific control/status dependent data
  (A) ATC service delivered:
      Bytes  Posn    Function
      1       14     0X20 ASCII space
      3      15-17   VAX generated ATC sequence number for
                      relevant ATC service
```

A3.1.1.2.3 Emergency Communications Downlink (CD) ATC Service Initiation

The following is a detailed description of the message format utilized to initiate an Emergency Communications Backup (CD) downlink ATC service to the VAX. The "Posn" column represents the byte position in the message as sent to the VAX, starting with position #1

```
Bytes  Posn    Function
7      1-7     Aircraft AID
1        8     0X20 ASCII space
3      9-11    "DFT" Emergency Communications Backup
1       12     0X20 ASCII Space
N   13-(N+12) Text, 40 characters max
```

A3.1.2 Terminal ATC Services

A3.1.2.1 Motorola ==> Simulator Messages

A3.1.2.1.1 Initial Contact (IC/AR) ATC Service Initiation

Upon receipt of an ARTS-IIIA initiated Initial Contact (IC) ATC service, the VAX will relay to the appropriate

flight simulator the ARTS generated ATC service initiation message defined in paragraph A3.6.2.1.1, starting with the "DL" NAS message type identifier.

A3.1.2.1.2 Terminal Information (TI) ATC Service Initiation
Upon receipt of an ARTS-IIIA initiated Terminal Information (TI) ATC service, the VAX will relay to the appropriate flight simulator the ARTS generated ATC service initiation message defined in paragraph A3.6.2.1.3, starting with the "DL" NAS message type identifier.

A3.1.2.1.3 Menu Text (MT) ATC Service Initiation
Upon receipt of an ARTS-IIIA initiated Menu Text (MT) ATC service, the VAX will relay to the appropriate flight simulator the ARTS generated ATC service initiation message defined in paragraph A3.6.2.1.4, starting with the "DL" NAS message type identifier.

A3.1.2.1.4 Transfer of Control (TC) ATC Service Initiation
Upon receipt of an ARTS-IIIA initiated Transfer of Control (TC) ATC service, the VAX will relay to the appropriate flight simulator the ARTS generated ATC service initiation message defined in paragraph A3.6.2.1.5, starting with the "DL" NAS message type identifier.

A3.1.2.1.5 Free Text (FT) ATC Service Initiation
Upon receipt of an ARTS-IIIA initiated Free Text (FT) ATC service, the VAX will relay to the appropriate flight simulator the ARTS generated ATC service initiation message defined in paragraph A3.6.2.1.6, starting with the "DL" NAS message type identifier.

A3.1.2.1.6 Control/Status
The following is a detailed description of the message format utilized by the VAX to send a control or status message back to a flight simulator. The "Posn" column represents the byte position in the message as sent to the VAX, starting with position #1

Bytes	Posn	Function
7	1-7	Aircraft AID, or ASCII blanks if not relevant
1	8	0X20 ASCII space
3	9-11	"XXX" Control/Status identifier
1	12	0X20 ASCII space
1	13	Control/Status action code

"T" - VAX has generated a "TIMEOUT" Pilot response to referenced ground initiated ATC service, and will not accept further simulator Pilot responses for that ATC service. This status message is only sent if Pilot timeout is considered to be a service terminating condition for the given test run.

"X" - VAX has received notice of the

cancellation of referenced ground initiated ATC service, and will not accept further simulator Pilot responses for that service.

"P" - VAX has detected a problem with a simulator data link response or initiation message (invalid sequence number, etc).

N 14-(N+13) Specific control/status dependent data

(A) Timeout:

Bytes	Posn	Function
1	14	0X20 ASCII space
3	15-17	VAX generated ATC sequence number for relevant ATC service

(A) ATC service cancellation:

Bytes	Posn	Function
1	14	0X20 ASCII space
3	15-17	VAX generated ATC sequence number for relevant ATC service

(A) Simulator message problem:

Bytes	Posn	Function
1	14	0X20 ASCII space
0-20	15-?	Readback of simulator initiated message, 20 characters maximum

A3.1.2.2 Simulator ==> Motorola Messages

A3.1.2.2.1 Initial Contact (IC/AR) ATC Service Response

The following is a detailed description of the message format utilized to send a flight simulator pilot response for a given IC ATC service back to the VAX. The "Posn" column represents the byte position in the message as sent to the VAX, starting with position #1

Bytes	Posn	Function
1	1	Pilot Response to ATC Service "W" WILCO "U" UNABLE "T" TIMEOUT (non-operational response used only in testbed)
1	2	(ASCII space 0X20)
3	3-5	ATC sequence number of relevant ATC service
1	6	(ASCII space 0X20)
3	7-9	Current assigned aircraft altitude, in hundreds of feet

A3.1.2.2.2 Terminal Information (TI) ATC Service Response

The following is a detailed description of the message format utilized to send a flight simulator pilot response for a given TI ATC service back to the VAX. The "Posn" column represents the byte position in the message as sent to the VAX, starting with position #1

Bytes	Posn	Function
1	1	Pilot Response to ATC Service "W" WILCO "U" UNABLE

		"T" TIMEOUT (non-operational response used only in testbed)
1	2	(ASCII space 0X20)
3	3-5	ATC sequence number of relevant ATC service

A3.1.2.2.3 Menu Text (MT) ATC Service Response

The following is a detailed description of the message format utilized to send a flight simulator pilot response for a given MT ATC service back to the VAX. The "Posn" column represents the byte position in the message as sent to the VAX, starting with position #1

Bytes	Posn	Function
1	1	Pilot Response to ATC Service
		"W" WILCO
		"U" UNABLE
		"T" TIMEOUT (non-operational response used only in testbed)
1	2	(ASCII space 0X20)
3	3-5	ATC sequence number of relevant ATC service

A3.1.2.2.4 Transfer of Control (TC) ATC Service Response

The following is a detailed description of the message format utilized to send a flight simulator pilot response for a given TC ATC service back to the VAX. The "Posn" column represents the byte position in the message as sent to the VAX, starting with position #1

Bytes	Posn	Function
1	1	Pilot Response to ATC Service
		"W" WILCO
		"U" UNABLE
		"T" TIMEOUT (non-operational response used only in testbed)
1	2	(ASCII space 0X20)
3	3-5	ATC sequence number of relevant ATC service
1	6	(ASCII space 0X20)
3	7-9	3-digit aircraft assigned altitude in hundreds of feet (needed for WILCO response during test runs employing Initial Contact function appended to TC WILCO. Altitude may be returned for other Pilot responses, but will not be utilized by VAX)

A3.1.2.2.5 Free Text (FT) ATC Service Response

The following is a detailed description of the message format utilized to send a flight simulator pilot response for a given FT ATC service back to the VAX. The "Posn" column represents the byte position in the message as sent to the VAX, starting with position #1

Bytes	Posn	Function
1	1	Pilot Response to ATC Service
		"W" WILCO
		"U" UNABLE
		"T" TIMEOUT (non-operational response used only in testbed)

1	2	(ASCII space 0X20)
3	3-5	ATC sequence number of relevant ATC service

A3.1.2.2.6 Control/Status

The following is a detailed description of the message format utilized to send a flight simulator contol or status message back to the VAX. The "Posn" column represents the byte position in the message as sent to the VAX, starting with position #1

Bytes	Posn	Function
7	1-7	Aircraft AID, or ASCII blanks if not relevant
1	8	0X20 ASCII space
3	9-11	"XXX" Control/Status identifier
1	12	0X20 ASCII space
1	13	Control/Status action code "D" - Referenced ground initiated ATC service has been delivered to Pilot
N	14-(N+13)	Specific control/status dependent data

(A) ATC service delivered:

Bytes	Posn	Function
1	14	0X20 ASCII space
3	15-17	VAX generated ATC sequence number for relevant ATC service

A3.1.3 Weather Products

For demonstration purposes, the Motorola NAS Interface System will provide a limited number of "canned" weather product messages that will be keyed to locations utilized during the NAS test runs. To retrieve a canned weather product message, the flight simulator will send the Motorola a weather product request message per A3.1.3.2 below. The Motorola will then send the requested product (or an indication of the lack of same).

A3.1.3.1 Motorola ==> Simulator Messages

A3.1.3.1.1 Weather Product Data

The following is a detailed description of the message format utilized by the Motorola to send a requested weather product to a flight simulator. The "POSN" column represents the byte position in the message, starting with position #1.

Bytes	Posn	Function
7	1-7	Aircraft AID
6	8-13	Weather product code and station identifier as received from simulator weather product request
1	14	0X20 ASCII space
1	15	Weather Product Status Code "0" - Requested product is not available "1" - Requested product is available. Data following is not last line of product. "2" - Requested product is available. Data following is last line of product.
1	16	0X20 ASCII space

0-80 17-96 Weather Product Data, 80 characters max

A3.1.3.2 Simulator ==> Motorola Messages

A3.1.3.2.1 Weather Product Request

The following is a detailed description of the message format utilized by the flight simulator to request a weather product from the Motorola. The "Posn" column represents the byte position in the message as received from the Motorola, starting with position #1.

Bytes	Posn	Function
7	1-7	Aircraft AID
1	8	0X20 ASCII space
3	9-11	Weather Product Identifier "SAO" - Surface Observation "FTA" - Terminal Forecast "RNS" - Narrative Radar Summary "FD1" - Winds Aloft Forecast
3	12-14	3-Letter Station Identifier

A3.1.3.2.2 Pilot Report

For demonstration purposes, the Motorola will accept Pilot Reports from the flight simulators, keyed to 3 letter station identifiers. The Motorola will not do anything with these PIREPS.

Bytes	Posn	Function
7	1-7	Aircraft AID
1	8	0X20 ASCII space
3	9-11	"PIR" Weather Product Identifier
3	12-14	3-Letter Station Identifier of station nearest to aircraft position
1	15	0X20 ASCII Space
1-80	16-95	Text of Pilot Report, 80 characters max

A3.1.4 Navigation Data Messages

For data link testbed operations utilizing flight simulators and DYSIM support, the flight simulator(s) navigation interface(s) will be routed to the Motorola NAS Interface System, which will convert the simulator data to a format suitable for the Host computer system DYSIM support program. The following simulator navigation application messages are patterned after the National Airspace System Simulation Support Facility To Cockpit Simulator Software Interface Control Document utilized as the interface standard for testbed operations utilizing NSSF support, and are intended to make simulator operations in the DYSIM environment as close as possible to operations in the NSSF environment.

A3.1.4.1 Motorola ==> Simulator Messages

A3.1.4.1.1 Initialization Message

The Initialization message is the first message sent to the simulator at the beginning of a test run. The simulator should not send any messages to the Motorola system prior to receipt of the Initialization message. At the start of a test run, when a simulator is scheduled to be

entered into the test scenario, the Host system will send the Motorola a start-track message for the aircraft AID corresponding to the simulator. The Motorola at that point will send the simulator an Initialization message, and the simulator will then initiate its periodic position update messages.

The following is a detailed description of the message format. The "POSN" column represents the byte position in the message, starting with position #1.

Bytes	Posn	Function
3	1-3	Message Identification "%51" - Initialization Message
7	4-10	Aircraft Identification, left justified, blank filled. Note that AID's begin with "XXX" for the testbed version of DYSIM Example: "XXXN40 "
12	11-22	Date Identification, 'MMM DD, YYYY' Example: "JUN 23, 1988"
8	23-30	System Time Identification, 'HH:MM:SS' Example: "12:30:45"
8	31-38	Simulation Time Identification 'HH:MM:SS' Example: "00:12:35"
3	39-41	Run Number Identification Example: "001"
1	42	Message Termination Character, 0D Hex

A3.1.4.1.2 Change-Of-Status Message

The Change-Of-Status message is sent by the Motorola system to inform the simulator of a change in simulation status. Three simulation states are defined by this message. The "FREEZE" state indicates that the simulation has been temporarily suspended, and that the simulator should stop sending data. The "GO" state indicates that the simulation has resumed following a "FREEZE" state, and that the simulator should resume sending data. The "TERMINATE" state indicates that the simulation has been completed, and that the simulator should stop sending data until the Initialization message is received for any subsequent test run.

The following is a detailed description of the message format. The "POSN" column represents the byte position in the message, starting with position #1.

Bytes	Posn	Function
3	1-3	Message Identification "%52" - Change-Of-Status Message
7	4-10	Aircraft Identification, left justified, blank filled. Note that AID's begin with "XXX" for the testbed version of DYSIM Example: "XXXN40 "
9	11-19	New Status Identification - One of the following: "FREEZE " "GO " "TERMINATE"
1	20	Message Termination Character, 0D Hex

A3.1.4.1.3 Sim-Time-Change Message

The Sim-Time-Change message is sent to the simulator by the Motorola periodically in order to maintain simulation time synchronization. The period between Sim-Time_Change message updates shall be between one and six seconds.

The following is a detailed description of the message format. The "POSN" column represents the byte position in the message, starting with position #1.

Bytes	Posn	Function
3	1-3	Message Identification "%53" - Sim-Time-Change Message
7	4-10	Aircraft Identification, left justified, blank filled. Note that AID's begin with "XXX" for the testbed version of DYSIM Example: "XXXN40 "
8	11-18	Simulation Time Identification 'HH:MM:SS' Example: "00:12:35"
1	19	Message Termination Character, 0D Hex

A3.1.4.1.4 Clear Text Message

The Clear Text message is utilized to send coordination messages from the Motorola System to the simulator.

The following is a detailed description of the message format. The "POSN" column represents the byte position in the message, starting with position #1.

Bytes	Posn	Function
3	1-3	Message Identification "%54" - Clear Text Message
7	4-10	Aircraft Identification, left justified, blank filled. Note that AID's begin with "XXX" for the testbed version of DYSIM Example: "XXXN40 "
N	11-(10+N)	Informal Text Message, 80 ASCII characters maximum
1	11+N	Message Termination Character, 0D Hex

A3.1.4.2 Simulator ==> Motorola Messages

A3.1.4.2.1 Beacon Change Message

The Beacon Change message is utilized by the simulator to indicate that the pilot has selected a new transponder mode 3/A code. The Motorola system will relay the new beacon code to the Host computer system, and the radar track for the aircraft will be updated with the new code.

The following is a detailed description of the message format. The "POSN" column represents the byte position in the message, starting with position #1.

Bytes	Posn	Function
3	1-3	Message Identification "%02" - Beacon Change Message
7	4-10	Aircraft Identification, left justified, blank filled. Note that AID's begin with "XXX" for the testbed version of DYSIM

		Example: "XXXN40 "
4	11-14	New Beacon Code, right justified octal integer field, blank filled
1	15	Message Termination Character, 0D Hex

A3.1.4.2.2 Ident Message

The Ident message is utilized by the simulator to indicate that the pilot has depressed the transponder ident button. The Motorola system will relay the Ident command to the Host computer system, which will generate enhanced video for the aircraft radar track for 15 seconds.

The following is a detailed description of the message format. The "POSN" column represents the byte position in the message, starting with position #1.

Bytes	Posn	Function
3	1-3	Message Identification "%03" - Ident Message
7	4-10	Aircraft Identification, left justified, blank filled. Note that AID's begin with "XXX" for the testbed version of DYSIM Example: "XXXN40 "
1	11	Message Termination Character, 0D Hex

A3.1.4.2.3 Push-To-Talk-On-Off Message

This message will not be utilized during DYSIM testbed operations.

A3.1.4.2.4 Communications Frequency Message

This message will not be utilized during DYSIM testbed operations.

A3.1.4.2.5 Extended-Lat-Long-Aircraft Update Message

This message is periodically sent by the simulator to indicate its current positioning information. The simulator shall send this message at a maximum rate of once per second, and a minimum rate of once every six seconds.

The following is a detailed description of the message format. The "POSN" column represents the byte position in the message, starting with position #1.

Bytes	Posn	Function
3	1-3	Message Identification "%06" - Extended-Lat-Long-A/C-Update Message
7	4-10	Aircraft Identification, left justified, blank filled. Note that AID's begin with "XXX" for the testbed version of DYSIM Example: "XXXN40 "
9	11-19	Latitude Identification, in degrees, fixed point real field, blank filled Example: "123.56789"
9	20-28	Longitude Identification, in degrees, fixed point real field, blank filled Example: " 23.56789"
8	29-36	Altitude, in feet, fixed point real field, blank filled

		Example: " 10000"
3	37-39	IN or OUT of Simulation Indicator - This field will not be used for DYSIM testbed operations, but must be filled with either " IN" or "OUT".
9	40-48	Heading Identification, in degrees, fixed point real field, blank filled Example: " 45.00000"
8	49-56	Indicated Air Speed Identification, in knots, fixed point real field, blank filled Example: " 225.000"
8	57-64	True Air Speed Identification, in knots, fixed point real field, blank filled Example: " 350.000"
8	65-72	Climb/Descent Rate Information, in feet/sec, fixed point real field, blank filled Example: " 25.123"
3	73-75	Push-To-Talk On/Off Status Indicator - This field will not be used for DYSIM testbed operations, but must be filled with either " ON" or "OFF".
1	76	Frequency Number Indication - This field will not be used for DYSIM testbed operations, but must be filled an ASCII numeric character between "0" and "7" inclusive.
1	77	Message Termination Character, 0D Hex

A3.1.4.2.6 Extended X/Y Aircraft-Update Message

This message will not be utilized during DYSIM testbed operations.

A3.1.4.2.6 Clear Text Message

The Clear Text message is utilized to send coordination messages from the simulator to the Motorola system.

The following is a detailed description of the message format. The "POSN" column represents the byte position in the message, starting with position #1.

Bytes	Posn	Function
3	1-3	Message Identification "%08" - Clear Text Message
7	4-10	Aircraft Identification, left justified, blank filled. Note that AID's begin with "XXX" for the testbed version of DYSIM Example: "XXXN40 "
N	11-(10+N)	Informal Text Message, 80 ASCII characters maximum
1	11+N	Message Termination Character, 0D Hex

A3.2 Motorola <==> NSSF Target Generation Facility Application Messages

Two interfaces have been established between the Motorola NAS Interface System and the NSSF Target Generation Facility (TGF) in the FAATC Red Brick Building. The first (and original) of these interfaces is a straight ASCII link to provide the TGF with an interfacility bus interface to be

utilized to transfer flight plan information from the TGF to the ARTS-IIIA computer for Terminal ATC Data Link testing, and for some non-Data Link program NSSF testing. Use of the VAX/TGF flight plan routing is necessary for Data Link Terminal testing because the ARTS has only one interfacility interface and that interface must be tied to the VAX/Motorola. The second Motorola <==> TGF interface is utilized for data link applications.

A3.2.1 Motorola <==> NSSF TGF Interface #1 Messages

A3.2.1.1 NSSF TGF Interface #1 ==> Motorola Messages

A3.2.1.1.1 FP Flight Plan Message

The following describes the contents of the NAS standard Flight Plan Message (FP) sent from the NSSF TGF computer to the Motorola system, for routing to the ARTS-IIIA. The flight plans are sent to the Motorola at the start of the test scenario, at one second intervals. NOTE: - This message is sent in straight ASCII text, without using the Ack-only protocol described in A2.2 above.

Bytes	Posn	Function
2	1-2	"FP" NAS message type
1	3	0X20 ASCII space
?	4-N	Remainder of NAS FP message
1	N+1	0X0D terminator
1	N+2	0X0A terminator (optional)

A3.2.1.1.2 TR Time Synchronization Message

(NOTE: The following message was developed for use with the original NSSF SEL computer interface. Use of this particular message by the TGF is not required, but Motorola must be time synchronized prior to the receipt of the first flight plan at the start of a run.)

The following describes the contents of the 4-20 character TR message alphanumeric character text field for a special TR message used by the NSSF TGF computer to inform the Motorola system of the current NAS current time. The Motorola system uses the message contents to reset its internal clock, but does not send the TR message on to the ARTS. The time synchronization message is required to ensure that the Motorola is in time synchronization with the TGF and ARTS-IIIA computers. NOTE: - This message is sent in straight ASCII text, without using the Ack-only protocol described in A2.2 above.

Bytes	Posn	Function
2	1-2	"TR" NAS message type
1	3	0X20 ASCII space
3	4-6	Motorola NAS site ID
1	7	0X20 ASCII space
1	8	"!" NAS clear weather symbol
1	9	"2" Time Synchronization prefix character
1	10	0X20 ASCII space
2	11-12	NAS time hours, 00-23
2	13-14	NAS time minutes, 00-59
2	15-16	NAS time seconds, 00-59

1	17	0X0D terminator
1	18	0X0A terminator (optional)

A3.2.2 Motorola <==> NSSF TGF Interface #2 Messages

A3.2.2.1 Motorola ==> NSSF TGF Interface #2 Messages

A3.2.2.1.1 Uplink ATC Service Initiation Message

The following is the definition of the message sent from the Motorola to the TGF for each ground initiated ATC service. This message, generated in the VAX, contains the data portion(s) of the ATC service, for presentation to the Sim-Pilot. Any portion(s) of the ATC service that are of a pre-defined structure that the VAX is able to recognize will be contained within angle brackets ("<>"). If the ATC service is WILCO'd by the Sim-Pilot, the VAX will automatically generate update messages to the TGF for the portions of the service contained within the angle brackets. The Sim-Pilot must manually scan any message portions not within angle brackets to determine whether additional manual TGF updates are required. If the ATC service contains multiple sub-messages, these will be delineated by semicolons.

Bytes	Posn	Function
2	1-2	"SP" TGF Aircraft Data Format (AFO) uplink ATC service message type
1	3	0X20 ASCII space
7	4-10	Aircraft AID, 7-ASCII characters, left justified, with trailing blanks
1	11	0X20 ASCII space
3	12-14	Motorola generated ATC sequence number for ATC service
1	15	0X20 ASCII space
N	16-(N+15)	NAS generated uplink ATC service initialization message, 150 characters max

A3.2.2.1.2 Downlink ATC Service Response Message

The following is the definition of the message sent from the Motorola to the TGF containing a response to a TGF Sim-Pilot initiated downlink ATC service. Each TGF initiated ATC service will receive two responses. The first response message will be a DELIVERED notification, telling the Sim-Pilot that the downlink service has been delivered to the ATC Controller. The second response message will either contain the Controller's response to the ATC service or a timeout notification, indicating no Controller response within a pre-determined period of time.

Bytes	Posn	Function
2	1-2	"RP" TGF Response Data Format (RFO) aircraft initiated ATC service response msg
1	3	0X20 ASCII space
7	4-10	Aircraft AID, 7-ASCII characters, left justified, with trailing blanks
1	11	0X20 ASCII space

3	12-14	TGF generated ATC sequence number for ATC service
1	15	0X20 ASCII space
1	16	Response to ATC service: "D" - DELIVERED "W" - WILCO "U" - UNABLE "R" - ROGER "S" - STANDBY "A" - APPROVED "T" - TIMEOUT

A3.2.2.1.3 Motorola ==> TGF Aircraft Update Message

The following is the definition of the message sent from the Motorola to the TGF containing aircraft update data. This message will be generated by the VAX for each WILCO'd ground initiated ATC service containing structured commands that the VAX is able to recognize. As described in A3.2.1.1, these recognizable portions will be enclosed in angle brackets to inform the Sim-Pilot that no manual update is required.

Bytes	Posn	Function
2	1-2	"CO" TGF Aircraft Data Format (AFO) TGF update message
1	3	0X20 ASCII space
7	4-10	Aircraft AID, 7-ASCII characters, left justified, with trailing blanks
1	11	0X20 ASCII space
3	12-14	Motorola generated ATC sequence number for TGF update message
1	15	0X20 ASCII space
N	16-(15+N)	Commands for TGF to process, separated by semicolons. Command phraseology follows: "HDG nnn" "TURN R nnn" "TURN L nnn" "SPD nnn" "ALT nnn" "XFER nnn.nnn"

A3.2.2.1.4 ATC Service Status Message

The following is the definition of the message sent from the Motorola to the TGF describing a change in status of a currently outstanding (no response from Sim-Pilot) ATC service. This message will be issued if a service cancellation message has been received from NAS, or if the VAX Pilot response timeout timer has timed out (not applicable if the TGF is keeping track of Pilot response time).

Bytes	Posn	Function
2	1-2	"RP" TGF Response Data Format (RFO) ATC service status message
1	3	0X20 ASCII space
7	4-10	Aircraft AID, 7-ASCII characters, left justified, with trailing blanks

1	11	0X20 ASCII space
3	12-14	NAS generated ATC sequence number for ATC service
1	15	0X20 ASCII space
1	16	ATC service status: "T" - Pilot response timeout timer has elapsed, and no further Pilot response to the ATC service will be accepted. "C" - Referenced ATC service has been cancelled by NAS, and no further Pilot response will be accepted.

A3.2.2.1.5 Auto-Wilco Option Select Message

The following is the description of the message sent from the Motorola to the TGF defining a change in state of the Auto-WILCO mode of operation. In Auto-WILCO mode, the VAX automatically generates a WILCO response for each ground initiated ATC service after a period of time predefined according to the type of testing involved. In Auto-WILCO mode, no Sim-Pilot responses are required, or will be accepted by the VAX. The default condition is Auto-WILCO mode off.

Bytes	Posn	Function
2	1-2	"AW" TGF System Data Format (SFO) Auto-WILCO mode select message
1	3	0X20 ASCII space
1	4	Auto-WILCO mode: "E" - Enable Auto-WILCO operation "D" - Disable Auto-WILCO operation

A3.2.2.1.6 TC Handoff of ATC Service Option Select Message

The following is the description of the message sent from the Motorola to the TGF to define a change in state of the ATC service handoff option. When the ATC service handoff option has been selected, a WILCO'd Transfer of Communication (TC) ATC service will transfer any other outstanding ATC services for the aircraft involved to the new TGF Sim-Pilot position defined by the transfer frequency. If the ATC service handoff is not selected, the TGF must inhibit any Sim-Pilot response to a TC service if there are any other outstanding ATC services to the aircraft. The default mode is ATC service handoff option selected.

Bytes	Posn	Function
2	1-2	"HO" TGF System Data Format (SFO) Data Link service handoff option message
1	3	0X20 ASCII space
1	4	Data Link service handoff mode: "E" - Enable handoff of aircraft having outstanding ATC services, transferring those services to the new sector/position "D" - Disallow handoff of an aircraft having outstanding ATC services

A3.2.2.2 NSSF TGF Interface #2 ==> Motorola Messages

A3.2.2.2.1 System Initialization Message

The following is the description of the message sent from the TGF to the Motorola to signify the beginning of a test run.

Bytes	Posn	Function
2	1-2	"IR" TGF System Data Format (SFO) system initialization message

A3.2.2.2.2 Time Synchronization Message

The following is the description of the TGF to Motorola message utilized to synchronize the Motorola system to NAS time. This message will be sent at the beginning of each test run and periodically during the run.

Bytes	Posn	Function
2	1-2	"TS" TGF System Data Format (SFO) time synchronization message
1	3	0X20 ASCII space
6	4-9	Current NAS time, hhmmss

A3.2.2.2.3 Downlink ATC Service Initiation Message

The following is the description of the message sent from the TGF to the Motorola to initiate an air to ground ATC data link service. If the TGF is simulating the Mode-S antenna delays, this message will be sent to the Motorola at the point of next antenna coverage of the relevant aircraft.

Bytes	Posn	Function
2	1-2	"PR" TGF Aircraft Data Format (AFO) downlink ATC service message type
1	3	0X20 ASCII space
7	4-10	Aircraft AID, 7-ASCII characters, left justified, with trailing blanks
1	11	0X20 ASCII space
3	12-14	TGF generated ATC sequence number for ATC service
1	15	0X20 ASCII space
N	16-(N+15)	Sim-Pilot entered ATC service message, 40 characters max

A3.2.2.2.4 Uplink ATC Service Response Message

The following is the description of the message sent from the TGF to the Motorola to respond to a ground initiated ATC service. For each ATC service, two responses are possible. If the TGF is simulating the Mode-S antenna delays, the first response will be a DELIVERED indication when the relevant aircraft is next under antenna coverage. The second response message is utilized to convey the Sim-Pilots response to the service. The TIMEOUT response is utilized only if the TGF is keeping track of the Pilot response timeout timer, and no Sim-Pilot response was entered within the allotted period of time.

Bytes	Posn	Function
2	1-2	"RP" TGF Response Data Format (RFO) ground initiated ATC service response message
1	3	0X20 ASCII space
7	4-10	Aircraft AID, 7-ASCII characters, left justified, with trailing blanks
1	11	0X20 ASCII space
3	12-14	NAS generated ATC sequence number for ATC service
1	15	0X20 ASCII space
1	16	Response to ATC service: "D" - DELIVERED "W" - WILCO "U" - UNABLE "T" - TIMEOUT
3	17-19	Current aircraft assigned altitude, in hundreds of feet

A3.2.2.2.5 TGF ==> Motorola Aircraft Update Message

The following is the description of the message sent from the TGF to the Motorola each time a Sim-Pilot makes a manual aircraft update of altitude or frequency. This message is also sent if a Sim-Pilot enters a change in state of aircraft data link equipment status.

Bytes	Posn	Function
2	1-2	"CH" TGF Aircraft Data Format (AFO) aircraft update message
1	3	0X20 ASCII space
7	4-10	Aircraft AID, 7-ASCII characters, left justified, with trailing blanks
1	11	0X20 ASCII space
3	12-14	TGF generated ATC sequence number for update message
1	15	0X20 ASCII space
3	16-18	Current aircraft assigned altitude, in hundreds of feet
1	19	0X20 ASCII space
7	20-26	Current aircraft assigned frequency, including decimal point
1	27	0X20 ASCII space
1	28	Data Link equipment status: "E" - Equipment enabled "D" - Equipment disabled

A3.2.2.2.6 TGF ==> Motorola Aircraft Flight Plan Message

The following is the description of the message sent from the TGF to the Motorola to convey an aircraft flight plan. The Motorola then forwards the flight plan to the ARTS-IIIA via the NAS interfacility link. This flight plan is the equivalent of that in A3.2.1.1 utilizing the ack-only link level protocol.

Bytes	Posn	Function
2	1-2	"FP" TGF Aircraft Flight Plan Message
1	3	0X20 ASCII space

N	4-(N+3)	NAS flight plan per NAS-MD-610 (data portion, beginning with "FP")

A3.3 Motorola <==> ISSS Prototype Application Messages
(To be determined at a later date)

A3.4 Motorola <==> DATAS Application Messages
(To be determined at a later date)

A3.5 Motorola <==> Host Data Formats

As of ATC services software Versions 8.20, five types of data messages have been defined, corresponding to the various NAS messages that are handled in the operational ATC software. These messages are as follows:

04 - NAS TR message
05 - NAS DT message
06 - NAS GI message
07 - NAS DL message
08 - Unknown NAS message (used for NAS DA, DR, DX ack/nack messages)

So far as the VAX ATC software I/O program is concerned, the TR, DT, GI, and DL message formats are essentially identical except for data field and (obviously) message type. The NAS DA, DR, and DX messages are handled by the Motorola NAS Interfacility interface, and status messages are sent to the VAX for any DR or DX problems. All message data between the VAX and the Motorola utilizes industry standard ASCII encoding - the Motorola software contains the encryption/decryption algorithms needed to convert the data to and from the Host/IBM EBCDIC format. The data fields for the currently defined TR, DT, GI, and DL messages follow - note that only upper-case letters are utilized:

A3.5.1 NAS TR message to/from VAX

Bytes	Function
*1	Last character of three character message source identification
*3	Numeric message #, 000 thru 999, generated by TR message source
*1	(ASCII space 0X20)
2	"TR" message type
1	(ASCII space 0X20)
3	Alphanumeric TR message destination identifier (for VAX/Motorola is nominally "ZCD", for Host is nominally "UDS")
1	(ASCII space 0X20)
1	"!" Clear weather symbol
2	"C1" TR message destination sub-address (only for messages originated by NAS)
1	(ASCII space 0X20)
4-20	Alphanumeric character message text

* NOTE: On messages going from VAX to Motorola, these characters will be ignored by the Motorola, which will generate these data fields on it's own prior to sending the message to NAS.

A3.5.1.1 Host ==> VAX Track Initiation TR Message

The following describes the contents of the 4-20 character TR message alphanumeric character text field for a special TR message used by the Host to inform the VAX that an aircraft track has been initiated. This TR message will be generated in the Host Sim-Tape, to be transmitted at the approximate time that the Sim-Tape initiates the aircraft track. If a number of aircraft tracks are initiated at the same NAS time, the TR target initiation messages should be spaced out over time so as not to overload the NAS interfacility bus interface to the Motorola.

Bytes	Posn	Function
1	1	"1" Track Initiation prefix character
1	2	0X20 ASCII space
2-7	3-N	Aircraft identification
1	N+1	0X20 ASCII space
1-2	N+2, N+3	Starting sector number

Examples:

1 NWA23 7
1 N8417P 10

A3.5.1.2 Host ==> VAX Time Synchronization TR Message

The following describes the contents of the 4-20 character TR message alphanumeric character text field for a special TR message used by the Host to inform the VAX of the current NAS time. This time synchronization message is required because the VAX uses time of day, and the Host utilizes Sim-Tape initiated UDS time during test runs. The VAX will utilize the UDS time during data reduction to generate a time offset which can be applied to VAX generated statistics to put them in time-sync with the Host and NSSF data reduction tapes. The Time Synchronization TR message should be sent by the Sim-Tape every 2 minutes during a test run. The exact spacing of the messages is not important, but each message must, of course, contain the value of NAS time that corresponds to the actual time that the message was sent.

Bytes	Posn	Function
1	1	"2" Time Synchronization prefix character
1	2	0X20 ASCII space
2	3-4	NAS time hours, 00-23
2	5-6	NAS time minutes, 00-59
2	7-8	NAS time seconds, 00-59

Examples:

2 125945
2 131108

A3.5.1.3 Host ==> VAX Track Cancellation TR Message

The following describes the contents of the 4-20 character TR message alphanumeric character text field for a special TR message used by the Host to inform the VAX that an aircraft

track has been terminated so that the VAX can delete that aircraft from the relevant Pilot display. This TR message will be generated in the Host Sim-Tape, to be transmitted at the approximate time that the Sim-Tape expects the aircraft to reach the end of its assigned route. If a number of aircraft tracks are terminated at the same NAS time, the TR target termination messages should be spaced out over time so as not to overload the NAS interfacility bus interface to the Motorola.

Bytes	Posn	Function
1	1	"3" Track Cancellation prefix character
1	2	0X20 ASCII space
2-7	3-N	Aircraft identification

Examples:
3 PAA22
3 N5268D

A3.5.1.4 Host ==> VAX Sim-Tape Number Archive

The following describes the contents of the 4-20 character TR message alphanumeric character text field for a special TR message used by the Host to inform the VAX of the number of the NAS Sim-Tape that is being utilized for the current run. This data is normally sent to the VAX once, at the beginning of the test run.

Bytes	Posn	Function
1	1	"4" Sim-Tape archive prefix character
1	2	0X20 ASCII space
1-10	3-N	Sim-Tape number (10 characters maximum)

A3.5.1.5 Host ==> Motorola Test Run Initialize

The following describes the contents of the 4-20 character TR message alphanumeric character text field for a special TR message used by the Host to inform the Motorola system of the start of a test run. If the test run is being conducted using Host/Dysim, the Motorola system uses this message as a cue to send Initialization messages to any flight simulators participating in the test run.

Bytes	Posn	Function
1	1	"5" Test Run Initialize prefix character
1	2	0X20 ASCII space
2	3-4	NAS time hours, 00-23
2	5-6	NAS time minutes, 00-59
2	7-8	NAS time seconds, 00-59
1	9	0X20 ASCII space
3	10-12	Sim-tape number

Examples:
2 125945 135
2 131108 010

A3.5.2 NAS DT message - a DT message is sent in response to a TR dat message - ATCIO.C will only receive these messages from the Motorola.

Bytes	Function

1	Last character of three character message source identification
3	Numeric message #, 000 thru 999, generated by DT message source
1	(ASCII space 0X20)
2	"DT" message type
1	(ASCII space 0X20)
1	Last character of three character alphanumeric source identification of associated TR message
3	Numeric message number of associated TR message
1	(ASCII space 0X20)
1	Echo of associated TR message "!" clear weather symbol
2	Echo of associated TR message "C1" destination sub- add
1	Echo of ASCII space (0X20)
4-20	Echo of associated TR message alphanumeric character message text

A3.5.3 NAS GI message

Bytes	Function
*1	Last character of three character message source identification
*3	Numeric message #, 000 thru 999, generated by TR message source
*1	(ASCII space 0X20)
2	"GI" message type
1	(ASCII space 0X20)
3	Alphanumeric GI message destination identifier
1	Ld IOT Position Identification (????!!) "E" - Hardware Maintenance Terminal "W" - Controller Supervisor Terminal
1	(ASCII space 0X20)
1	"!" Clear weather symbol
2	"C1" TR message destination sub-address (only for messages originated by NAS)
1	(ASCII space 0X20)
4-??	Alphanumeric character message text

* NOTE: On messages going from VAX to Motorola, these characters will be ignored by the Motorola, which will generate these data fields on it's own prior to sending the message to NAS.

A3.5.4 NAS DL Message

A3.5.4.1 Host => VAX DL Messages

A3.5.4.1.1 NAS DL ATC Service Initiation

The following is a detailed description of the NAS DL message format, utilized to issue ATC services from the Host to the VAX. The "Posn" column represents the byte position in the message as received from the Motorola, starting with the first byte of the "DL" message type.

Bytes	Posn	Function
1		Last character of three character message source identification

```
3                Numeric message #, 000 thru 999, generated
                  by DL message source
1                (ASCII space 0X20)
2        1-2     "DL" message type
1        3       (ASCII space 0X20)
7        4-10    Aircraft identification, left justified,
                  padded if necessary with 0X20 ASCII spaces
1        11      (ASCII space 0X20)
4        12-15   IFF Mode 3/A code
1        16      (ASCII space 0X20)
2        17-18   Type of service
                           "AC"/"AA" - Altitude Confirmation/
                             Assignment
                         "IA" - Interim Altitude Assignment
                                (Within VAX, handled the same as
                                AC/AA, but provided for use by
                                cockpit flight simulators to
                                distinguish between interim and
                                final altitude assignments)
                           "TC" - Transfer of Control
                         "RF" - Change Radio Frequency
                           "EM" - En Route Minimum Safe Altitud
                                 Warning (EMSAW)
                         "FT" - Free Text Message
                         "MT" - Menu Text Message
1        19      (ASCII space 0X20)
3        20-22   Sequential ATC service number, 000-999, to
                  provide additional parameter for message
                  matching
1        23      Communication action code
                         "V" - Normal voice communications
                           operational procedure
                         "N" - No voice communication expected -
                           pilot must respond to data link
                           message
         24-(as required) ATC service specific data, left
                  justified, followed by one 0X20  ASCII space
   (1A) AA/AC/IA altitude assignment service (without menu
          text):
     Posn        Data
     24          Prefix text
                         "0" - "MAINTAIN"
                         "1" - "CLIMB & MAINTAIN"
                         "2" - "DESCEND & MAINTAIN"
                         "3" - Prefix text not employed
     25          Altitude units
                         "0" - Feet
                         "1" - Flight Level
     26-28       Altitude, in 100's of feet
                         (Ex - 5500 ft  ==>  055)
                         ("VFR" ==> maintain VFR clearances)
                         ("OTP" ==> stay on top of ceiling)
     29-31       Altimeter setting, least 3 sig. digits
                         (Ex - 29.75  ==>  975)
```

```
                    ("-M-" ==> no baro setting available)
  32          0X20 ASCII blank character
(1B) AA/AC/IA altitude assignment service (with menu
       text):
  Posn        Data
  24-26       Altitude, in 100's of feet
                    (Ex - 5500 ft  ==>  055)
                    ("VFR" ==> maintain VFR clearances)
                    ("OTP" ==> stay on top of ceiling)
  27          0X20 ASCII blank character
  28          1st character of menu text message
  29          2nd character of menu text message
  ..          ....................
  (27+N)      last character of menu text message
  (27+N+1)    0X20 ASCII blank character
  Note - "N" = # of menu text characters = 16 maximum
(1C) AA/AC/IA altitude assignment service (blocked
       altitude):
  Posn        Data
  24          Prefix text
                    "0" - "MAINTAIN"
                    "1" - "CLIMB & MAINTAIN"
                    "2" - "DESCEND & MAINTAIN"
                    "3" - Prefix text not employed
  25          Altitude units
                    "0" - Feet
                    "1" - Flight Level
  26-28       Lower altitude limit, in 100's of feet
                    (Ex - 5500 ft  ==>  055)
                    ("VFR" ==> maintain VFR clearances)
                    ("OTP" ==> stay on top of ceiling)
  29          "B" for blocked altitude mode
  30-32       Upper altitude limit, in 100's of feet
  33-35       Altimeter setting, least 3 sig. digits
                    (Ex - 29.75  ==>  975)
                    ("-M-" ==> no baro setting available)
  36          0X20 ASCII blank character
(2A) TC Transfer of Control service, without Initial
       Contact option:
  24-30       New radio frequency, including decimal point
                    (Ex - 123.450)
  31-33       Altimeter setting, least 3 sig. digits
                    (Ex - 29.75  ==>  975)
                    ("-M-" ==> no baro setting available)
  34          0X20 ASCII blank character
(2B) TC Transfer of Control service, with Initial
       Contact option selected (the 3-digit current
       assigned altitude field prompts the VAX to return
       assigned altitude within any WILCO response):
  24-30       New radio frequency, including decimal point
                    (Ex - 123.450)
  31-33       Altimeter setting, least 3 sig. digits
                    (Ex - 29.75  ==>  975)
                    ("-M-" ==> no baro setting available)
```

```
  34          0X20 ASCII blank character
  35-37       Current A/C assigned altitude (Ex - 170)
  38          0X20 ASCII blank character
(3) Radio failure service:
  Posn        Data
  24-30       New radio frequency, including decimal point
                   (Ex - 123.450)
  31-33       Altimeter setting, least 3 sig. digits
                   (Ex - 29.75  ==>  975)
                   ("-M-" ==> no baro setting available)
  34          0X20 ASCII blank character
(4) EMSAW service:
  Posn        Data
  24-26       Minimum safe altitude, in 100's of feet
                   (Ex - 5500 ft  ==>  055)
  27-29       Altimeter setting, least 3 sig. digits
                   (Ex - 29.75  ==>  975)
                   ("-M-" ==> no baro setting available)
  30          0X20 ASCII blank character
(5) Free Text service:
  Posn        Data
  24          1st character of free text message
  25          2nd character of free text message
  ..          ....................
  (23+N)      last character of free text message
  (23+N+1)    0X20 ASCII blank character
  Note - "N" = # of free text characters = 20 maximum
  Note - When operating with TGF, the following strings
         will be recognized by the VAX, which will
         generate automatic TGF update messages if the
         ATC service is WILCO'd (nnn is numeric value):
                  "CTAM nnn"
                  "DTAM nnn"
                  "INC SPD TO nnn"
                  "RDC SPD TO nnn"
                  "FLY HDG nnn"
                  "FLY Hnnn"
                  "TURN LEFT HDG nnn"
                  "TURN RIGHT HDG nnn"
(6) Menu Text service:
  Posn        Data
  24          1st character of menu text message
  25          2nd character of menu text message
  ..          ....................
  (23+N)      last character of menu text message
  (23+N+1)    0X20 ASCII blank character
  Note - "N" = # of menu text characters = 20 maximum
  Note - When operating with TGF, the following strings
         will be recognized by the VAX, which will
         generate automatic TGF update messages if the
         ATC service is WILCO'd (nnn is numeric value):
                  "CTAM nnn"
                  "DTAM nnn"
                  "INC SPD TO nnn"
```

"RDC SPD TO nnn"
"FLY HDG nnn"
"FLY Hnnn"
"TURN LEFT HDG nnn"
"TURN RIGHT HDG nnn"

********** NOTE **********

The initial implementations of the En-Route ATC Data Link services incorporated only one message per data link service. Subsequent software versions allow a maximum of three messages per data link service, with all messages in a given data link service being treated as a common group so far as Pilot response is concerned. If more than one message is included within a single ATC service described above, each additional message shall be appended to the overall data link service as follows:

Bytes	Posn	Function
1		"$" Delimiter, specifying that a second (or third) message is to be included in ATC service.
1		0X20 ASCII space
2		2-Letter code (AA, TC, FT, etc) identifying ATC service type of second/third message.
1		0X20 ASCII space
N		ATC service specific data for second/third message, beginning with "Posn" byte 24, as specified above for the first message, terminating in the specified 0X20 ASCII space.

A3.5.4.1.2 NAS DL Control/Status

The following is a detailed description of the NAS DL message format, utilized to issue special control and status messages from the Host to the VAX. The "Posn" column represents the byte position in the message as received from the Motorola, starting with the first byte of the "DL" message type.

Bytes	Posn	Function
1		Last character of three character message source identification
3		Numeric message #, 000 thru 999, generated by DL message source
1		(ASCII space 0X20)
2	1-2	"DL" message type
1	3	(ASCII space 0X20)
7	4-10	Aircraft identification (if relevant), left justified, padded if necessary with 0X20 ASCII spaces
1	11	(ASCII space 0X20)
4	12-15	IFF Mode 3/A code
1	16	(ASCII space 0X20)
2	17-18	Type of service "XX" - Special Control/Status Message
1	19	(ASCII space 0X20)

3	20-22	Sequence Number, 000-999, to provide additional parameter for message matching
1	23	Communication action code "V" - Normal voice communications operational procedure "N" - No voice communication expected - pilot must respond to data link message
1	24	Control/Status Function Identifier "0" - Acknowledgement of VAX originated Control/Status message "1" - Start aircraft track. VAX acknowledgement of this message is not required. "2" - Drop aircraft track. VAX acknowledgement of this message is not required. "3" - Cancellation of outstanding ATC service. VAX acknowledgement of this message is not required.
1	25	(ASCII space 0X20)

26-(as required) Control/Status msg specific data

(1A) Acknowledgement of VAX originated Control/Status message:

Posn	Data
26-28	VAX sequence number of message being acknowledged
29	(ASCII space 0X20)

(1B) Start aircraft track

Posn	Data
26-27	2-digit number of starting NAS sector
28	(ASCII space 0X20)
29-31	Current assigned altitude
32	(ASCII space 0X20)
33	Data Link equipage status "0" - Aircraft not Data Link equipped "1" - Aircraft is Data Link equipped
34	(ASCII space 0X20)
35	Terminal ATC area aircraft status "0" Aircraft either En-Route only, or else is Terminal overflight "1" Aircraft is Terminal arrival
36	(ASCII space 0X20)

(1C) Drop aircraft track

(no additional data required)

(1D) Cancellation of outstanding ATC service:

Posn	Data
26-28	VAX sequence number of message being cancelled
29	(ASCII space 0X20)

A3.5.4.1.3 NAS DL ATC Service Response

The following is a detailed description of the NAS DL message format utilized by the Host to respond to an Emergency Communications Backup downlink ATC service issued by the VAX. The "Posn" column represents the byte position

in the message as received from the Motorola, starting with the first byte of the "DL" message type.

Bytes	Posn	Function
1		Last character of three character message source identification
3		Numeric message #, 000 thru 999, generated by DL message source
1		(ASCII space 0X20)
2	1-2	"DL" message type
1	3	(ASCII space 0X20)
7	4-10	Aircraft identification, left justified, padded if necessary with 0X20 ASCII spaces.
1	11	(ASCII space 0X20)
4	12-15	IFF Mode 3/A code
1	16	(ASCII space 0X20)
2	17-18	Type of service "CD" - Emergency Communications Downlink
1	19	(ASCII space 0X20)
3	20-22	VAX generated Sequence Number, 000-099.
1	23	Communication action code (not utilized, but retained for compatibility with other messages) "V" - Normal voice communications operational procedure "N" - No voice communication expected - pilot must respond to data link message
1	24	Response to ATC service "D" - ATC service delivered to ATC controller console "S" - Standby "R" - Roger "W" - WILCO "A" - Approved "U" - Unable
1	25	(ASCII space 0X20)

A3.5.4.2 VAX => Host DL Messages

A3.5.4.2.1 NAS DL PVD/List Display

The following is a detailed description of the NAS DL message format, utilized to send ATC service pertinent status and display messages from the VAX to the Host. The "Posn" column represents the byte position in the message as sent from the Motorola to the Host, starting with the first byte of the "DL" message type.

Bytes	Posn	Function
*1		Last character of three character message source identification
*3		Numeric message #, 000 thru 999, generated by DL message source
*1		(ASCII space 0X20)
2	1-2	"DL" message type
1	3	(ASCII space 0X20)
7	4-10	Aircraft identification, left justified,

		padded if necessary with 0X20 ASCII spaces
1	11	(ASCII space 0X20)
4	12-15	IFF Mode 3/A code
1	16	(ASCII space 0X20)
2	17-18	Type of service "AC" - Altitude Confirmation "TC" - Transfer of Control "RF" - Change Radio Frequency "EM" - En Route Minimum Safe Altitude Warning (EMSAW) "FT" - Free Text Message "MT" - Menu Text "CD" - Communications Downlink
1	19	(ASCII space 0X20)
3	20-22	Sequential ATC service number, 000-999, to provide additional parameter for message matching
1	23	(ASCII space 0X20)
1	24	FDB Field code indicating field in PVD full data block to be manipulated (include leader, position symbol). "0" - No field to be manipulated "1" - Aircraft ID "2" - B1-B3 assigned altitude "3" - Reported altitude "4" - Computer ID "5" - Groundspeed/Misc "6" - Position indicator
1	25	(ASCII space 0X20)
1	26	FDB Display code indicating FDB display attribute (blinking, character size, intensity, etc.). "0" - No blink, normal size, low inten "2" - Oversize, field A (AID) "4" - High Intensity, entire FDB "8" - Oversize, DL symbol only
1	27	(ASCII space 0X20)
7	28-34	FDB Data, left justified, padded if necessary with 0X20 ASCII spaces
1	35	(ASCII space 0X20)
1	36	List Action Code "N" - No change to list entry "C" - Change (will be interpreted as add no matching data in list to be changed) "D" - Delete list entry
1	37	(ASCII space 0X20)
1	38	List Display code indicating List display attribute (blinking, character size, intensity, etc.). "0" - No blink, normal size, low inten "1" - Blink, normal size, low inten "2" - No blink, oversize, low inten "3" - Blink, oversize, low inten

"4" - No blink, normal size, hi inten
"5" - Blink, normal size, hi inten
"6" - No blink, oversize, hi inten
"7" - Blink, oversize, hi inten

1	39	(ASCII space 0X20)
10	40-49	Characters to be displayed in service field in list entry, left justified, padded if necessary with 0X20 ASCII spaces
***1	50	(ASCII space 0X20)
***3	51-53	3-Character current assigned altitude

* NOTE: On messages going from VAX to Motorola, these characters will be ignored by the Motorola, which will generate these data fields on it's own prior to sending the message to NAS.
*** NOTE: These fields are included *ONLY* in WILCO responses to TC Transfer of Control ATC services where the 3-digit current assigned altitude was included within the original service initiation message (see A3.5.4.1.1).

A3.5.4.2.2 NAS DL Control/Status

The following is a detailed description of the NAS DL message format, utilized to issue special control and status messages from the VAX to the Host. The "Posn" column represents the byte position in the message as received from the Motorola, starting with the first byte of the "DL" message type.

Bytes	Posn	Function
1		Last character of three character message source identification
3		Numeric message #, 000 thru 999, generated by DL message source
1		(ASCII space 0X20)
2	1-2	"DL" message type
1	3	(ASCII space 0X20)
7	4-10	Aircraft identification (if relevant), left justified, padded if necessary with 0X20 ASCII spaces
1	11	(ASCII space 0X20)
4	12-15	IFF Mode 3/A code
1	16	(ASCII space 0X20)
2	17-18	Type of service "XX" - Special Control/Status Message
1	19	(ASCII space 0X20)
3	20-22	Sequence Number, 000-099, generated by the VAX, to provide additional parameter for message matching.
1	23	(ASCII space 0X20)
1	24	Control/Status Function Identifier "0" - Acknowledgement of Host originated Control/Status message "1" - Data Link inhibited for specified A/C (on board equipment failure, etc). Host acknowledgement of this message is not required.

"2" - Data Link enabled for specified A/C. Host acknowledgement of this message is not required.
"3" - Simulator aircraft data update

1 25 (ASCII space 0X20)
26-(as required) Control/Status msg specific data

(1A) Acknowledgement of Host originated Control/Status message:

Posn	Data
26-28	Host sequence number of message being acknowledged
29	(ASCII space 0X20)

(1B) Data Link inhibited for specified A/C (no additional data required)

(1C) Data Link enabled for specified A/C (no additional data required)

(1D) Simulator aircraft data update - subdivided by type of data update. Remember that all data is in printable ASCII characters.

(1D-1) - Beacon Code Change Message

Posn	Data
26-27	"BC" identifier
28	0X20 ASCII space
29-32	New beacon code, 4 octal digits Example: "7700"
33	0X20 ASCII space

(1D-2) - Ident Message

Posn	Data
26-27	"ID" identifier
28	0X20 ASCII space

(1D-3) - Simulator Position Update Message

Posn	Data
26-27	"PU" identifier
28	0X20 ASCII space
29-31	Current magnetic heading, integer degrees, with leading zeros
32	0X20 ASCII space
33-36	Current A/C true airspeed (ground speed), integer knots, with leading zeros
37	0X20 ASCII space
38-40	Current altitude, integer hundreds of feet, with leading zeros
41	0X20 ASCII space
42-44	Current climb/descent rate, signed integer, hundreds of feet per minute, with leading zeros Example: "-09"
45	0X20 ASCII space
46-51	Current Latitude, 'DDMMSS' format, with leading zeros
52	0X20 ASCII space
53-58	Current Longitude, 'DDMMSS' format, with leading zeros

59 0X20 ASCII space

A3.5.4.2.3 NAS DL Emergency Communications Downlink (CD) ATC Service Initiation

The following is a detailed description of the NAS DL message format, utilized to initiate the Emergency Communications Backup Downlink (CD) ATC service (aka Downlink Free Text) from the VAX to the Host. The "Posn" column represents the byte position in the message as sent from the Motorola to the Host, starting with the first byte of the "DL" message type.

Bytes	Posn	Function
*1		Last character of three character message source identification
*3		Numeric message #, 000 thru 999, generated by DL message source
*1		(ASCII space 0X20)
2	1-2	"DL" message type
1	3	(ASCII space 0X20)
7	4-10	Aircraft identification, left justified, padded if necessary with 0X20 ASCII spaces
1	11	(ASCII space 0X20)
4	12-15	IFF Mode 3/A code
1	16	(ASCII space 0X20)
2	17-18	Type of service "CD" - Emergency Communications Downlink
1	19	(ASCII space 0X20)
3	20-22	Sequential ATC service number, 000-099, generated by the VAX, to provide additional parameter for message matching
1	23	(ASCII space 0X20)
1	24	FDB Field code indicating field in PVD full data block to be manipulated (include leader, position symbol). "0" - No field to be manipulated "1" - Aircraft ID "2" - B1-B3 assigned altitude "3" - Reported altitude "4" - Computer ID "5" - Groundspeed/Misc "6" - Position indicator
1	25	(ASCII space 0X20)
1	26	FDB Display code indicating FDB display attribute (blinking, character size, intensity, etc.). "0" - No blink, normal size, low inten "2" - Oversize, field A (AID) "4" - High Intensity, entire FDB "8" - Oversize, DL symbol only
1	27	(ASCII space 0X20)
7	28-34	FDB Data, left justified, padded if necessary with 0X20 ASCII spaces
1	35	(ASCII space 0X20)
1	36	List Action Code

"N" - No change to list entry
"C" - Change (will be interpreted as add no matching data in list to be changed)
"D" - Delete list entry

1	37	(ASCII space 0X20)
1	38	List Display code indicating List display attribute (blinking, character size, intensity, etc.). "0" - No blink, normal size, low inten "1" - Blink, normal size, low inten "2" - No blink, oversize, low inten "3" - Blink, oversize, low inten "4" - No blink, normal size, hi inten "5" - Blink, normal size, hi inten "6" - No blink, oversize, hi inten "7" - Blink, oversize, hi inten
1	39	(ASCII space 0X20)
10	40-49	Characters to be displayed in service field in list entry, left justified, padded if necessary with 0X20 ASCII spaces
1	50	(ASCII space 0X20)
1-40	51-N	Text message, 40 characters maximum
1	N+1	(ASCII space 0X20)

* NOTE: On messages going from VAX to Motorola, these characters will be ignored by the Motorola, which will generate these data fields on it's own prior to sending the message to NAS.

One additional note - normal NAS identifications are as follows:

VAX/Motorola "ZCD"
RBB Host "UDS"

A3.6 Motorola <==> ARTS-IIIA Application Message Formats

A3.6.1 NAS TR Message

(No specific TR messages have as yet been defined)

A3.6.2 NAS DL Message

A3.6.2.1 ARTS-IIIA => VAX DL Messages

A3.6.2.1.1 Initial Contact (IC) ATC Service Response

The following is a detailed description of the NAS DL message issued from the ARTS-IIIA to respond to an Initial Contact (IC) ATC service issued by the VAX (for original, aircraft initiated version of IC ATC service). The "Posn" column represents the byte position in the message as received from the Motorola, starting with the first byte of the "DL" message type.

***** THIS MESSAGE FORMAT NO LONGER UTILIZED *****

Bytes	Posn	Function
3		Three character message source ID
4		Four character time field
3		Numeric message #, 000 thru 999, generated by DL message source

1		0X20 ASCII space delimiter
2	1-2	"DL" message type
1	3	0X20 ASCII space delimiter
1	4	"T" Terminal ATC indicator for use by Host in integrated En-Route/Terminal testbed for message addressing
1	5	0X20 ASCII space delimiter
2	6-7	"IC" ATC service type
1	8	0X20 ASCII space delimiter
3	9-11	VAX generated ATC sequence number utilized in IC service initiation message
1	12	0X20 ASCII space delimiter
	13-(as required)	IC ATC response data dependent upon ARTS-IIA acceptance of IC service ATIS code and altitude data:

(A) ATIS code and altitude data both correct

Posn	Data
13	0X20 ASCII space delimiter

(B) ATIS code only is incorrect

Posn	Data
13	Correct ATIS code
14	0X20 ASCII space delimiter

(A) altitude data only is incorrect

Posn	Data
13-15	Three numeric digit correct altitude
16	0X20 ASCII space delimiter

(A) ATIS code and altitude data both incorrect

Posn	Data
13	Correct ATIS code
14-16	Three numeric digit correct altitude
17	0X20 ASCII space delimiter

A3.6.2.1.2 Initial Contact (IC/AR) ATC Service Initiation

The following is a detailed description of the NAS DL message issued from the ARTS-IIIA to initiate an Initial Contact (IC) ATC service to the VAX (for later, ground initiated version of IC ATC service). Note that the ATC service type field has been named "AR" rather than "IC" in order to avoid possible confusion with the original version of the IC service. The "Posn" column represents the byte position in the message as received from the Motorola, starting with the first byte of the "DL" message type.

Bytes	Posn	Function
3		Three character message source ID
4		Four character time field
3		Numeric message #, 000 thru 999, generated by DL message source
1		0X20 ASCII space delimiter
2	1-2	"DL" message type
1	3	0X20 ASCII space delimiter
1	4	"T" Terminal ATC indicator for use by Host in integrated En-Route/Terminal testbed for message addressing
1	5	0X20 ASCII space delimiter

2	6-7	"AR" ATC service type
1	8	0X20 ASCII space delimiter
3-7		3-7 character aircraft ID
1		0X20 ASCII space delimiter
3		3 digit ARTS generated ATC sequence number (000-099)
1		0X20 ASCII space delimiter

A3.6.2.1.3 Terminal Information (TI) ATC Service Initiation

The following is a detailed description of the NAS DL message issued from the ARTS-IIIA to initiate a Terminal Information (TI) ATC service to the VAX. The "Posn" column represents the byte position in the message as received from the Motorola, starting with the first byte of the "DL" message type.

	Bytes	Posn	Function
	3		Three character message source ID
	4		Four character time field
	3		Numeric message #, 000 thru 999, generated by DL message source
	1		0X20 ASCII space delimiter
	2	1-2	"DL" message type
	1	3	0X20 ASCII space delimiter
	1	4	"T" Terminal ATC indicator for use by Host in integrated En-Route/Terminal testbed for message addressing
	1	5	0X20 ASCII space delimiter
	2	6-7	"TI" ATC service type
	1	8	0X20 ASCII space delimiter
	3-7		3-7 character aircraft ID
	1		0X20 ASCII space delimiter
	3		3 digit ARTS generated ATC sequence number (000-099)
	1		0X20 ASCII space delimiter
***	2		2 digit character count of data message to follow, 42 characters maximum
***	1		0X20 ASCII space delimiter
***	N		Message data characters
***	1		0X20 ASCII space delimiter

*** Note: Initial TI implementation will contain a single message per ATC service. If subsequent development of the TI ATC service requires more than one message per service, the fields marked "***" will be repeated for each message. Maximum total service length is 97 characters, starting with "DL T...". 3 messages maximum per service.

Note: When operating with TGF, the following will be recognized by the VAX, which will generate automatic TGF update messages if the ATC service is WILCO'd (nnn is numeric value):

"CTAM nnn"

"DTAM nnn"
"INC SPD TO nnn"
"RDC SPD TO nnn"
"FLY HDG nnn"
"FLY Hnnn"
"TURN LEFT HDG nnn"
"TURN RIGHT HDG nnn"

A3.6.2.1.4 Menu Text (MT) ATC Service Initiation

The following is a detailed description of the NAS DL message issued from the ARTS-IIIA to initiate a Menu Text (MT) ATC service to the VAX. The "Posn" column represents the byte position in the message as received from the Motorola, starting with the first byte of the "DL" message type.

	Bytes	Posn	Function
	3		Three character message source ID
	4		Four character time field
	3		Numeric message #, 000 thru 999, generated by DL message source
	1		0X20 ASCII space delimiter
	2	1-2	"DL" message type
	1	3	0X20 ASCII space delimiter
	1	4	"T" Terminal ATC indicator for use by Host in integrated En-Route/Terminal testbed for message addressing
	1	5	0X20 ASCII space delimiter
	2	6-7	"MT" ATC service type
	1	8	0X20 ASCII space delimiter
	3-7		3-7 character aircraft ID
	1		0X20 ASCII space delimiter
	3		3 digit ARTS generated ATC sequence number (000-099)
	1		0X20 ASCII space delimiter
***	2		2 digit character count of data message to follow, 42 characters maximum
***	1		0X20 ASCII space delimiter
***	N		Message data characters
***	1		0X20 ASCII space delimiter

*** Note: Initial MT implementation will contain a single message per ATC service. If subsequent development of the TI ATC service requires more than one message per service, the fields marked "***" will be repeated for each message. Maximum total service length is 97 characters, starting with "DL T...". 3 messages maximum per service.

Note: When operating with TGF, the following will be recognized by the VAX, which will generate automatic TGF update messages if the ATC service is WILCO'd (nnn is numeric value):

"CTAM nnn"

"DTAM nnn"
"INC SPD TO nnn"
"RDC SPD TO nnn"
"FLY HDG nnn"
"FLY Hnnn"
"TURN LEFT HDG nnn"
"TURN RIGHT HDG nnn"

A3.6.2.1.5 Transfer of Communications (TC) ATC Service Initiation

The following is a detailed description of the NAS DL message issued from the ARTS-IIIA to initiate a Transfer of Communications (TC) ATC service to the VAX. The "Posn" column represents the byte position in the message as received from the Motorola, starting with the first byte of the "DL" message type.

Bytes	Posn	Function
3		Three character message source ID
4		Four character time field
3		Numeric message #, 000 thru 999, generated by DL message source
1		0X20 ASCII space delimiter
2	1-2	"DL" message type
1	3	0X20 ASCII space delimiter
1	4	"T" Terminal ATC indicator for use by Host in integrated En-Route/Terminal testbed for message addressing
1	5	0X20 ASCII space delimiter
2	6-7	"TC" ATC service type
1	8	0X20 ASCII space delimiter
3-7		3-7 character aircraft ID
1		0X20 ASCII space delimiter
3		3 digit ARTS generated ATC sequence number (000-099)
1		0X20 ASCII space delimiter
7		New radio communications frequency, including decimal point (example - "127.750")
1		0X20 ASCII space delimiter

A3.6.2.1.6 Free Text (FT) ATC Service Initiation

The following is a detailed description of the NAS DL message issued from the ARTS-IIIA to initiate a Free Text (FT) ATC service to the VAX. The "Posn" column represents the byte position in the message as received from the Motorola, starting with the first byte of the "DL" message type.

Bytes	Posn	Function
3		Three character message source ID
4		Four character time field
3		Numeric message #, 000 thru 999, generated by DL message source
1		0X20 ASCII space delimiter
2	1-2	"DL" message type
1	3	0X20 ASCII space delimiter

1	4	"T" Terminal ATC indicator for use by Host in integrated En-Route/Terminal testbed for message addressing
1	5	0X20 ASCII space delimiter
2	6-7	"FT" ATC service type
1	8	0X20 ASCII space delimiter
3-7		3-7 character aircraft ID
1		0X20 ASCII space delimiter
3		3 digit ARTS generated ATC sequence number (000-099)
1		0X20 ASCII space delimiter
2		2 digit character count of data message to follow, 42 characters maximum
1		0X20 ASCII space delimiter
N		Message data characters
1		0X20 ASCII space delimiter

Note: When operating with TGF, the following will be recognized by the VAX, which will generate automatic TGF update messages if the ATC service is WILCO'd (nnn is numeric value):

"CTAM nnn"
"DTAM nnn"
"INC SPD TO nnn"
"RDC SPD TO nnn"
"FLY HDG nnn"
"FLY Hnnn"
"TURN LEFT HDG nnn"
"TURN RIGHT HDG nnn"

A3.6.2.1.7 NAS DL Control/Status

The following is a detailed description of the NAS DL message format, utilized to issue special control and status messages from the ARTS-IIIA to the VAX. The "Posn" column represents the byte position in the message as received from the Motorola, starting with the first byte of the "DL" message type.

Bytes	Posn	Function
3		Three character message source ID
4		Four character time field
3		Numeric message #, 000 thru 999, generated by DL message source
1		0X20 ASCII space delimiter
2	1-2	"DL" message type
1	3	0X20 ASCII space delimiter
1	4	"T" Terminal ATC indicator for use by Host in integrated En-Route/Terminal testbed for message addressing
1	5	0X20 ASCII space delimiter
2	6-7	"XX" ATC service type - Special Control/ Status Message
1	8	0X20 ASCII space delimiter
3-7		3-7 character aircraft ID
1		0X20 ASCII space delimiter

```
3              3 digit ARTS generated ATC sequence number
                 (000-099)
1              0X20 ASCII space delimiter
1              Control/Status Function Identifier
                "0" - Acknowledgement of VAX originated
                      Control/Status message
                "1" - Start aircraft track. VAX acknowledge-
                      ment of this message is not required.
                "2" - Drop aircraft track. VAX acknowledge-
                      ment of this message is not required.
                "3" - Cancellation of outstanding ATC
                      service. VAX acknowledgement of this
                      message is not required.
1              0X20 ASCII space delimiter
          (as required) Control/Status msg specific data
     (0) Acknowledgement of VAX originated Control/
         Status message:
        Bytes     Data
          3       VAX sequence number of message being
                   acknowledged
          1       (ASCII space 0X20)
     (1) Start aircraft track:
        Bytes     Data
          1       1-digit alphabetic character for
                   starting position.
          1       (ASCII space 0X20)
          3       Current assigned altitude (100's of
                   feet) (field will be set to "000" if
                   assigned altitude is invalid or not
                   available)
          1       (ASCII space 0X20)
          4       Assigned transponder mode 3/A code
          1       (ASCII space 0X20)
          1       Data Link equipage status
                    "0" - Aircraft not Data Link equipped
                    "1" - Aircraft is Data Link equipped
          1       (ASCII space 0X20)
     (2) Drop aircraft track:
                  (no additional data required)
     (3) Cancellation of outstanding ATC service:
        Bytes     Data
          3       VAX sequence number of message being
                   cancelled
          1       (ASCII space 0X20)
```

A3.6.2.2 VAX => ARTS-IIIA DL Messages

A3.6.2.2.1 Initial Contact (IC) ATC Service Initiation

The following is a detailed description of the NAS DL message issued by the VAX to initiate an Initial Contact (IC) ATC service to the ARTS-IIIA (for original, aircraft initiated version of IC ATC service). The "Posn" column represents the byte position in the message as transmitted by the Motorola, starting with the first byte of the "DL" message type.

***** THIS MESSAGE FORMAT NO LONGER UTILIZED *****

Bytes	Posn	Function
3		Three character message source ID
4		Four character time field
3		Numeric message #, 000 thru 999, generated by DL message source
1		0X20 ASCII space delimiter
2	1-2	"DL" message type
1	3	0X20 ASCII space delimiter
1	4	"T" Terminal ATC indicator for use by Host in integrated En-Route/Terminal testbed for message addressing
1	5	0X20 ASCII space delimiter
2	6-7	"IC" ATC service type
1	8	0X20 ASCII space delimiter
3-7	9-N	3-7 character aircraft ID
1	=>N+1	0X20 ASCII space delimiter
3	=>N+4	VAX generated ATC sequence number (100-199)
1	=>N+5	0X20 ASCII space delimiter
	13-(as required)	ATIS code and/or altitude data, dependent upon aircraft status:
	(A) Terminal ATC area arrival aircraft	
	Posn	Data
	=>N+6	Current ATIS code
	=>N+9	3-digit, numeric, current assigned altitude
	=>N+10	0X20 ASCII space delimiter
	(B) Terminal ATC area departure or overflight A/C	
	=>N+8	3-digit, numeric, current assigned altitude
	=>N+9	0X20 ASCII space delimiter

A3.6.2.2.2 Initial Contact (IC/AR) ATC Service Response

The following is a detailed description of the NAS DL message issued from the VAX to respond to an Initial Contact (IC) ATC service issued by the ARTS (for later, ground initiated version of IC ATC service). Note that the ATC service type field has been named "AR" rather than "IC" in order to avoid possible confusion with the original version of the IC service. The "Posn" column represents the byte position in the message as sent to the Motorola, starting with the first byte of the "DL" message type.

Bytes	Posn	Function
3		Three character message source ID
4		Four character time field
3		Numeric message #, 000 thru 999, generated by DL message source
1		0X20 ASCII space delimiter
2	1-2	"DL" message type
1	3	0X20 ASCII space delimiter
1	4	"T" Terminal ATC indicator for use by Host in integrated En-Route/Terminal testbed for message addressing
1	5	0X20 ASCII space delimiter
2	6-7	"AR" ATC service type
1	8	0X20 ASCII space delimiter

3-7	3-7 character aircraft ID
1	0X20 ASCII space delimiter
3	3 digit ARTS sequence number generated by ARTS in ATC service initiation message
1	0X20 ASCII space delimiter
3	3 digit aircraft current assigned altitude (000 to 999), or 3 character status code as follows: "DLV" Technical Acknowledge indicating that ATC service initiation message was successfully delivered to aircraft. "NAK" Technical Non-Acknowledge indicating that ATC service initiation message was not delivered to aircraft. "UNA" Pilot entered UNABLE response "TIM" Pilot entered, or automatically generated "TIMEOUT" response "NDL" No Data Link error, caused by ARTS sending data link message to an aircraft defined by VAX to be not data link equipped "ERR" Data Error indicating that VAX has detected a data error in ARTS ATC service initiation message
1	0X20 ASCII space delimiter

A3.6.2.2.3 Terminal Information (TI) ATC Service Response

The following is a detailed description of the NAS DL message issued from the VAX to respond to a Terminal Information (TI) ATC service issued by the ARTS. The "Posn" column represents the byte position in the message as sent to the Motorola, starting with the first byte of the "DL" message type.

Bytes	Posn	Function
3		Three character message source ID
4		Four character time field
3		Numeric message #, 000 thru 999, generated by DL message source
1		0X20 ASCII space delimiter
2	1-2	"DL" message type
1	3	0X20 ASCII space delimiter
1	4	"T" Terminal ATC indicator for use by Host in integrated En-Route/Terminal testbed for message addressing
1	5	0X20 ASCII space delimiter
2	6-7	"TI" ATC service type
1	8	0X20 ASCII space delimiter
3-7		3-7 character aircraft ID
1		0X20 ASCII space delimiter
3		3 digit ARTS sequence number generated by ARTS in ATC service initiation message
1		0X20 ASCII space delimiter

3	3 character ATC service status code "DLV" Technical Acknowledge indicating that ATC service initiation message was successfully delivered to aircraft. "NAK" Technical Non-Acknowledge indicating that ATC service initiation message was not delivered to aircraft. "WIL" Pilot entered WILCO response "UNA" Pilot entered UNABLE response "TIM" Pilot entered, or automatically generated "TIMEOUT" response "NDL" No Data Link error, caused by ARTS sending data link message to an aircraft defined by VAX to be not data link equipped "ERR" Data Error indicating that VAX has detected a data error in ARTS ATC service initiation message
1	0X20 ASCII space delimiter

A3.6.2.2.4 Menu Text (MT) ATC Service Response

The following is a detailed description of the NAS DL message issued from the VAX to respond to a Menu Text (MT)) ATC service issued by the ARTS. The "Posn" column represents the byte position in the message as sent to the Motorola, starting with the first byte of the "DL" message type.

Bytes	Posn	Function
3		Three character message source ID
4		Four character time field
3		Numeric message #, 000 thru 999, generated by DL message source
1		0X20 ASCII space delimiter
2	1-2	"DL" message type
1	3	0X20 ASCII space delimiter
1	4	"T" Terminal ATC indicator for use by Host in integrated En-Route/Terminal testbed for message addressing
1	5	0X20 ASCII space delimiter
2	6-7	"MT" ATC service type
1	8	0X20 ASCII space delimiter
3-7		3-7 character aircraft ID
1		0X20 ASCII space delimiter
3		3 digit ARTS sequence number generated by ARTS in ATC service initiation message
1		0X20 ASCII space delimiter
3		3 character ATC service status code "DLV" Technical Acknowledge indicating that ATC service initiation message was successfully delivered to aircraft. "NAK" Technical Non-Acknowledge

indicating that ATC service initiation message was not delivered to aircraft.
"WIL" Pilot entered WILCO response
"UNA" Pilot entered UNABLE response
"TIM" Pilot entered, or automatically generated "TIMEOUT" response
"NDL" No Data Link error, caused by ARTS sending data link message to an aircraft defined by VAX to be not data link equipped
"ERR" Data Error indicating that VAX has detected a data error in ARTS ATC service initiation message

1 0X20 ASCII space delimiter

A3.6.2.2.5 Transfer of Communication (TC) ATC Service Response

The following is a detailed description of the NAS DL message issued from the VAX to respond to a Transfer of Communication (TC) ATC service issued by the ARTS. The "Posn" column represents the byte position in the message as sent to the Motorola, starting with the first byte of the "DL" message type.

Bytes	Posn	Function
3		Three character message source ID
4		Four character time field
3		Numeric message #, 000 thru 999, generated by DL message source
1		0X20 ASCII space delimiter
2	1-2	"DL" message type
1	3	0X20 ASCII space delimiter
1	4	"T" Terminal ATC indicator for use by Host in integrated En-Route/Terminal testbed for message addressing
1	5	0X20 ASCII space delimiter
2	6-7	"TC" ATC service type
1	8	0X20 ASCII space delimiter
3-7		3-7 character aircraft ID
1		0X20 ASCII space delimiter
3		3 digit ARTS sequence number generated by ARTS in ATC service initiation message
1		0X20 ASCII space delimiter
3		3 character ATC service status code
		"DLV" Technical Acknowledge indicating that ATC service initiation message was successfully delivered to aircraft.
		"NAK" Technical Non-Acknowledge indicating that ATC service initiation message was not delivered to aircraft.
		"WIL" Pilot entered WILCO response
		"UNA" Pilot entered UNABLE response

"TIM" Pilot entered, or automatically generated "TIMEOUT" response
"NDL" No Data Link error, caused by ARTS sending data link message to an aircraft defined by VAX to be not data link equipped
"ERR" Data Error indicating that VAX has detected a data error in ARTS ATC service initiation message

1 0X20 ASCII space delimiter

********** NOTE **********
The following fields apply only to a TC ATC service that has been WILCO'd by the Pilot when the Initial Contact via TC WILCO option is being utilized.
****

3 3-digit aircraft assigned altitude in hundreds of feet
1 0X20 ASCII space delimiter

A3.6.2.2.6 Free Text (FT) ATC Service Response

The following is a detailed description of the NAS DL message issued from the VAX to respond to a Free Text (FT) ATC service issued by the ARTS. The "Posn" column represents the byte position in the message as sent to the Motorola, starting with the first byte of the "DL" message type.

Bytes	Posn	Function
3		Three character message source ID
4		Four character time field
3		Numeric message #, 000 thru 999, generated by DL message source
1		0X20 ASCII space delimiter
2	1-2	"DL" message type
1	3	0X20 ASCII space delimiter
1	4	"T" Terminal ATC indicator for use by Host in integrated En-Route/Terminal testbed for message addressing
1	5	0X20 ASCII space delimiter
2	6-7	"FT" ATC service type
1	8	0X20 ASCII space delimiter
3-7		3-7 character aircraft ID
1		0X20 ASCII space delimiter
3		3 digit ARTS sequence number generated by ARTS in ATC service initiation message
1		0X20 ASCII space delimiter
3		3 character ATC service status code

"DLV" Technical Acknowledge indicating that ATC service initiation message was successfully delivered to aircraft.
"NAK" Technical Non-Acknowledge indicating that ATC service initiation message was not

delivered to aircraft.
"WIL" Pilot entered WILCO response
"UNA" Pilot entered UNABLE response
"TIM" Pilot entered, or automatically generated "TIMEOUT" response
"NDL" No Data Link error, caused by ARTS sending data link message to an aircraft defined by VAX to be not data link equipped
"ERR" Data Error indicating that VAX has detected a data error in ARTS ATC service initiation message

1 0X20 ASCII space delimiter

A3.6.2.2.7 NAS DL Control/Status

The following is a detailed description of the NAS DL message format, utilized to issue special control and status messages from the VAX to the ARTS-IIIA. The "Posn" column represents the byte position in the message as sent to the Motorola, starting with the first byte of the "DL" message type.

Bytes	Posn	Function
3		Three character message source ID
4		Four character time field
3		Numeric message #, 000 thru 999, generated by DL message source
1		0X20 ASCII space delimiter
2	1-2	"DL" message type
1	3	0X20 ASCII space delimiter
1	4	"T" Terminal ATC indicator for use by Host in integrated En-Route/Terminal testbed for message addressing
1	5	0X20 ASCII space delimiter
2	6-7	"XX" ATC service type - Special Control/ Status Message
1	8	0X20 ASCII space delimiter
3-7		3-7 character aircraft ID
1		0X20 ASCII space delimiter
3		3 digit VAX generated ATC sequence number (000-099)
1		0X20 ASCII space delimiter
1		Control/Status Function Identifier "0" - Acknowledgement of ARTS originated Control/Status message
1		0X20 ASCII space delimiter

(as required) Control/Status msg specific data

(1A) Acknowledgement of VAX originated Control/ Status message:

Bytes	Data
3	ARTS generated sequence number of msg being acknowledged
1	(ASCII space 0X20)