FAA-CT-ACD 32090/9

ACD
9

COPY 2

FAA WJH Technical Center
00093288

DOT/FAA/CT-ACD32090/9

DATA LINK INITIAL TERMINAL ATC SERVICES TEST PLAN

John Zvanya, et al.

April 1990

FEDERAL AVIATION ADMINISTRATION

APR 30 Rec'd

TECHNICAL CENTER LIBRARY
ATLANTIC CITY, N.J. 08405

Engineering, Research, and Development Service
Concepts Analysis Division
FAA Technical Center
Atlantic City International Airport, N.J. 08405

TABLE OF CONTENTS

		Page
1.0	OBJECTIVE	1
2.0	BACKGROUND	1
3.0	SCOPE	2
4.0	TEST BED DESCRIPTION	3
5.0	TEST CONDUCT OVERVIEW	6
6.0	DESIGN VERIFICATION	6
	6.1 Purpose	6
	6.2 Duration	8
	6.3 Method	8
	6.4 Procedures	8
	6.5 Scenarios	9
	6.6 Data Collection	9
	6.7 Data Reduction & Analysis	9
	6.8 Test Results	9
7.0	RESOURCES	10
	7.1 Personnel	10
	7.2 Facilities	10
	7.3 Test Equipment	10
8.0	MINI-STUDIES	11
	8.1 Purpose	11
	8.2 Duration	11
	8.3 Method	11
	8.4 Procedures	12
	8.5 Scenarios	13
	8.6 Data Collection	13
	8.6.1 Test Subjects/Observer Questionnaires	14
	8.6.2 Data Reduction and Analysis	14
	8.6.3 Test Results	14
	8.7 Facilities	15
9.0	OPERATIONAL EVALUATION	15
	9.1 Purpose	15
	9.2 Duration	15
	9.3 Method	15

TABLE OF CONTENTS (con't)

		Page
9.4	Test Conduct	15
9.5	Test Scenarios	16
9.6	Data Collection	17
9.7	Data Reduction and Analysis	17
9.8	Test Results	17
10.0	RESULTS - TECHNICAL DATA PACKAGE	17

LIST OF ILLUSTRATIONS

Figure		Page
1a	Stand Alone ARTS IIIA/Terminal Data Link Test Bed	4
1b	Fully Configured Data Link Test Bed	5
2	Test Phases	7

1.0 OBJECTIVE.

The purpose of testing the Terminal Data Link Services is to provide objective and subjective data that will define functional requirements for initial Air Traffic Control (ATC) services in the Mode S Data Link system. Tests will be conducted to evaluate technical and operational issues using the Federal Aviation Administration Technical Center (FAATC) Data Link Test Bed facilities to simulate an ATC operational environment. The resultant data will be used to develop a Technical Data Package (TDP) for the contractual development of operational Data Link software in the National Airspace System (NAS).

2.0 BACKGROUND.

The United States began federal operation of its air traffic control system in 1936. Since that time, there has been a dramatic increase in the amount of air traffic which this system is required to manage in a safe, orderly, and efficient manner. In 1981 the Federal Aviation Administration (FAA) made an assessment of current air traffic control requirements and the ability of the system to meet the future needs of airborne transportation. A major finding of this evaluation was that, although the present system was adequate for contemporary demands, the projected doubling of air traffic by the year 2000 would rapidly overwhelm its capabilities.

The result of this foresight was the development of the National Airspace System (NAS) Plan. An essential component of the NAS Plan is the Advanced Automation System (AAS) which will offer computer assistance to air traffic controllers and permit a digital data link between ground based operations and aircraft. This data link will be provided by a Secondary Surveillance Radar (SSR) known as the Mode Select Beacon System (Mode S).

The Mode S System will replace the current Air Traffic Control Radar Beacon System (ATCRBS). Mode S will continue to provide the same functions as ATCRBS with enhanced accuracy and capacity. Mode S will also offer the additional capability of Data Link. The discrete address capability of the Mode S secondary surveillance radar provides a communication system without using VHF voice channels. Flight data, air traffic control information, weather information, and services based on surveillance information can be transmitted in digital format contributing to enhanced levels of safety and reduction of pilot/controller workload.

Because of its flexibility and capacity, the Mode S Data Link promises to be a key to increased future automation of the air traffic control system. One of the primary ways in which this potential will be achieved will be through the impact of Data Link on the tasks of the air traffic controller.

In 1987 the FAA established an accelerated Data Link program which incorporates the applications previously defined in the NAS Plan as well as new concept proposals utilizing ground or avionics data. The accelerated program includes the definition of set weather and air traffic control applications. The development of a system architecture to support the defined applications is also a requirement. Extensive development work will be required in order to finalize Data Link services prior to deployment in the field. The FAA Technical Center has been tasked with providing a structured development Test Bed for identified services and applications. Many candidate services have been identified, however, explicit implementation procedures need to be developed and fully tested. The present Data Link Test Bed established at the FAA Technical Center will be used primarily to evaluate ATC services in NAS equipment and will be modified to support the various candidate services as they are identified. The Test Bed will also support the evaluation of ATC and non-ATC services in an integrated test.

The current Data Link Test Bed consists of the ARTS IIIA computer system in the Terminal System Support Facility, the NAS Simulation Support Facility (NSSF), and a VAX Computer. The ARTS IIIA has been modified to accommodate new Data Link functions for evaluation purposes. In 1991, the Test Bed will be enhanced to interface with a production Mode S sensor and avionics equipments at the FAA Technical Center.

The Test Bed is intended for use by controllers in exercises representing realistic air traffic control scenarios. In order to insure the improvements in safety and efficiency of ATC services for Data Link, it will be necessary to assess its effects on the workload and performance capabilities of the controllers. This will be accomplished by using advanced assessment techniques and methodological tools for identification of potential workload problems associated with the implementation of services. Results will be analyzed and recommendations for the development of controller procedures in the Data Link environment will be defined.

The FAA Technical Center is responsible to develop, define, evaluate, and demonstrate suitable Data Link services and operational procedures for their use. Future applications will extend to general message transmission, clearance delivery, in-flight plan amendment and a variety of other services requiring interactions among controllers, pilots, and the automated system. The Test Bed is viewed as the focal facility for Data Link development.

3.0 SCOPE.

It is the intent of this Test Plan to describe the test approach for Data Link ATC services. Each Data Link service will be

investigated and analyzed both on an individual basis and together with other services on an integrated basis.

The subject Test Plan is divided into three sections: design verification testing, mini-studies, and operational evaluation. Design verification testing describes the engineering requirements to be validated prior to controller evaluations. The Mini-Studies are being conducted in order to further define and reduce to a manageable number the appropriate Data Link procedures and display options for each service.

The operational evaluation defines the Data Link functions and procedures in the context of full-scale ATC operations and results in the formulation of functional requirements for each service to be included in a Technical Data Package (TDP) for Data Link implementation.

4.0 TEST BED DESCRIPTION.

The Technical Center Data Link Test Bed was developed to support the design and test of the various candidate ATC services for Data Link System implementation. The ultimate goal of the Test Bed is to integrate all NAS elements and computer systems at the Technical Center required to define, develop, validate Data Link services for implementation.

The Data Link (DL) test environment hardware configurations for Terminal DL development and testing will consist of two configurations as shown in figures 1a and 1b. One configuration will be a stand alone system consisting of the Data Link Processor (DLP) and one of the ARTS IIIA system. The other configuration will be fully configured consisting of the DLP, one of the ARTS IIIA system, the Host system and the National Simulation Support Facility (NSSF).

The stand alone configuration will primarily be used for debugging, DL message development and some initial demonstrations. In this configuration the DLP will communicate with the ARTS IIIA through the ARTS IIIA Interfacility Communications Adapter (ICA). The Laboratory Signal Switching System (LSSS) will provide the connection between the DLP and the ICA. The ARTS IIIA will receive DL data in the same format as it will subsequently receive from the Host system and will respond to the DLP in the same format as if it were responding to a Host system. The ARTS IIIA internal Training Target Generator (TTG) will be used to provide target data and flight plan data via scenarios.

The Fully Configured Data Link Test Bed will be configured as it is currently anticipated to be in an operational setting with the exception that target data will be provided to the ARTS IIIA and the Host system via the NSSF to allow repeatable scenarios for debugging and demonstrations. In this configuration the DLP will

STAND ALONE ARTS IIIA / TERMINAL DATA LINK TEST BED

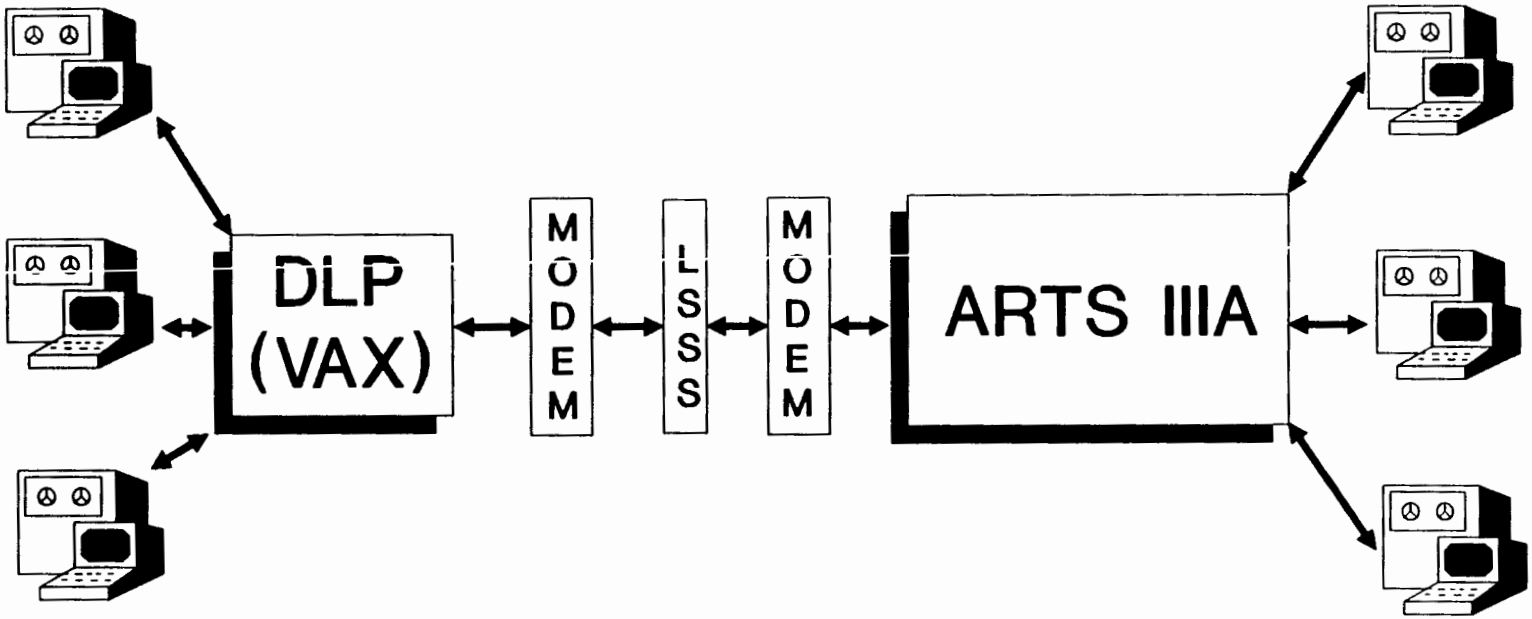

FIGURE 1A

FULLY CONFIGURED DATA LINK TEST BED

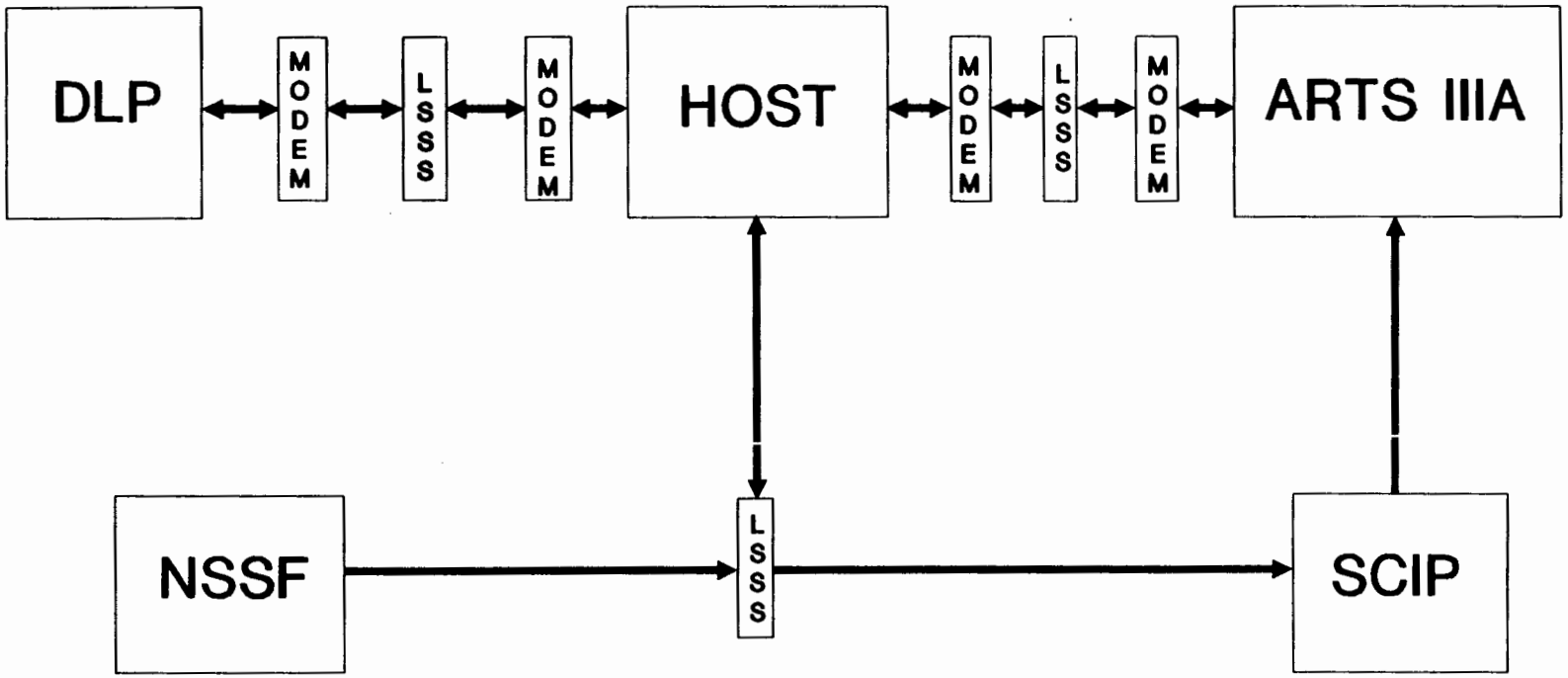

FIGURE 1B

only communicate with the Host system. The Host will do the appropriate processing of those messages relating to Aircraft under Host control and transmit the appropriate responses to the DLP.

In addition, the Host will store and forward those messages that originate in the DLP and are addressed to the ARTS IIIA and vice versa.

5.0 TEST CONDUCT OVERVIEW.

As mentioned in the Scope of this document, testing of ATC services package one will be accomplished in three phases: design verification, mini-studies, and operational evaluation (see figure 2). It is the intent of this Test Plan to describe the three phases of the testing. Specific details of required tests are subject to change due to the evolutionary nature of the testing. Detailed test procedures for the Mini-Study phase and the Operational Evaluation phase will be available prior to commencement of the actual testing.

It should be noted that while testing proceeds on ATC services package one, package two may be defined. This will consist of a parallel design and evaluation effort. Many of the procedures and methodologies described herein likely will apply to package two evaluation efforts.

The design verification phase consists of building test scenarios, validating interfaces, exercising test bed options, and analyzing results using modified data reduction programs.

The mini-studies phases encompasses controlled evaluation of test subjects; assessing operational suitability, controller preferences and workload; and documenting service definitions for the operational evaluation phase.

The operational evaluation phase will include: running realistic traffic scenarios; using the Test Target Generator (TTG) and actual site adaptations; running scenarios with and without Data Link; using structured controller/observer questionnaires and debriefings; performing data collection and analysis; and coordination efforts with Air Traffic Requirement service (ATR).

6.0 DESIGN VERIFICATION.

6.1 Purpose.

The purpose of the Design Verification Testing is to verify that the Data Link Test Bed is functionally consistent with the engineering design.

Figure 2 TEST PHASES

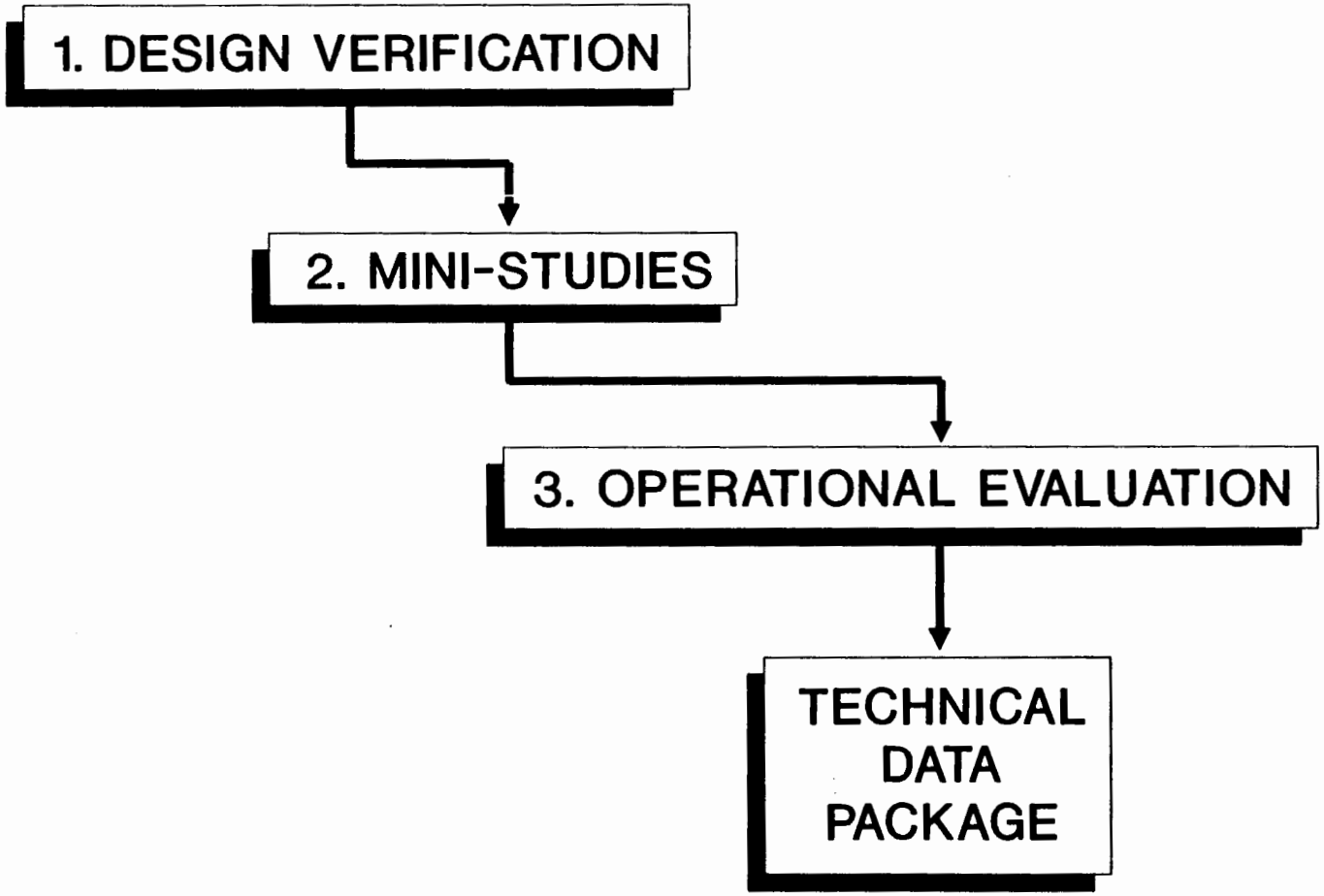

FAA WJH Technical Center
00093288

6.2 Duration.

Initial Contact will be the first Data Link service tested. Design Verification Testing for the Initial Contact Service is required after the completion of the modifications to the ARTS III^A operational software. The remaining services, Transfer of Communications and Terminal Information Service will be tested upon completion of the First Service testing. Testing will continue until the Test Bed functions according to engineering design and problems identified during testing are resolved.

6.3 Method.

The following sections describe the method for Design Verification Testing. This includes a description of the Procedures, the Data Reduction and Analysis, the Scenarios, and the Performance Measures.

6.4 Procedures.

The tests will use scenarios designed to exercise all the available display options in the Data Link Test Bed. Problems identified during the testing will be logged in a problem data base using the Data Link Coordination/Trouble Report form and assigned to the appropriate personnel for resolution. Design Verification Testing will terminate when the problems identified during testing have been resolved.

Scenarios will be built that include test cases that were created to test the Data Link services using a variety of aircraft interactions. Initially, the scenarios will be designed using the TTG.

After the scripts have been checked and the Data Link Test Bed options are functioning correctly, Design Verification Testing will continue using the TTG. Scenarios will be available that will use four sectors as controller positions and two sectors as pilot positions. Scripts will be used by each position to test the Data Link options and continue to verify that the Test Bed is functioning properly.

After testing is completed, Design Verification Testing will continue using the NSSF. This testing will verify correct operation of the interface between the Test Bed and the NSSF. Personnel at the NSSF pilot positions will communicate with personnel at sector positions in the Display Laboratory using headsets. The NSSF pilots will respond to controller requests on the NSSF terminals and on the VAX pilot terminals as indicated in the scripts. This testing will verify that the NSSF personnel are able to perform the VAX Data Link pilot actions as well as the NSSF pilot actions. In addition, the testing will verify that the

NSSF, Test Bed procedures, and scripts are ready for evaluations by controllers.

6.5 Scenarios.

The scenarios will be built to test package one services using the TTG. The Design Verification Testing will use four sector positions in the display laboratory for the controller positions. The four sector positions will include a combination of high and low altitude sectors within the airspace to create a traffic sample that includes ascending and descending aircraft. Scripts will contain inputs for altitude amendments that match the traffic sample. Actions will be scripted to test each of the Test Bed options at each sector for list display, automatic or manual mode for Data Link messages, and pilot responses using entries at the VAX simulation pilot terminals.

6.6 Data Collection.

On the VAX computer system, disk files will be recorded to provide an audit trail of the pilot terminal inputs and the Data Link messages transmitted between the VAX and the ARTS IIIA. In addition, a terminal connected to the Heurikon 68000 processor will be used to provide an on-line display of the messages transmitted between the ARTS IIIA and the VAX.

6.7 Data Reduction and Analysis.

Data collected during the tests will be reduced and analyzed off-line. The results of the data collected during the test will be used to verify correct operation of the Data Link Test Bed. Observer logs will also be used to record significant events and to identify problems during the testing.

The disk audit trail recorded on the VAX will be examined using the existing VAX editor capabilities as needed. The editors will be used to select portions of the audit trail for problem investigation. The selected portions will be printed as needed for comparison with the ARTS IIIA data reduction outputs.

6.8 Test Results.

Since the purpose of Design Verification Testing is to identify problems in the test bed, test logs will be maintained to identify the options tested, the expected results, and the actual results. If problems are identified, the logs will describe the problem and identify the recorded data to aid the developers in resolving the problem. A Data Link Coordination/Trouble Report will be used to log and track the problems and their solution. In addition, weekly status reports will be prepared to identify the Test Bed status and determine if activities are on schedule. The status reports will

also be used to prioritize the problems found during the testing to identify critical problems that will affect the other scheduled activities.

At the end of Design Verification Testing, a comprehensive report will be written providing details about the options tested, the status of each option, and changes to options or processing that would enhance the operation of the Test Bed. The report will include the VAX outputs analyzed during testing and the test logs prepared for each test. A report of outstanding problems will also be prepared including the expected resolution if available and an assigned priority for fixing the problems.

7.0 RESOURCES.

The following sections identify the personnel, facilities, and test equipment necessary to conduct Design Verification Testing.

7.1 Personnel.

The Design Verification Testing will be conducted by FAA ACD-320 and TMA personnel. In addition, TMA personnel will be available to resolve problems identified during the testing. When testing, six people will be needed to operate the simulated pilot and Data Link terminal positions.

7.2 Facilities.

Operation of the Data Link ATC services Test Bed requires the FAA Technical Center NAS laboratories and the ACD-100 general laboratory.

In the ACD-100 laboratory, the ACD-320 DEC VAX 11/750 is required, along with dedicated use of the Heurikon 68000 interface processor. VAX controlled Pilot and Echo display terminals will be placed in the NAS en route and NSSF labs. These computer terminals will interface to the VAX via dedicated short-haul modems.

7.3 Test Equipment.

Specialized and/or dedicated test equipment is not required for the testing of the Data Link ATC services Test Bed, with the exception of a data analyzer for monitoring the condition of the VAX/Heurikon - Host modem line. Testing that is required beyond normal system operation will be accomplished utilizing in-house hardware or software. Additionally, the VAX and the Heurikon 68000 interface processor can operate in a "self-test" mode, independent of any other Test Bed element, to verify operation.

8.0 MINI-STUDIES.

8.1 Purpose.

The Mini-Studies are small-scale en route ATC simulations of alternative ways of performing a particular Data Link service. Evaluation by former or currently active controllers is needed to select the best procedure for each of the proposed package one services. The procedures selected will then be incorporated into a full-scale Data Link simulation for field controller operational evaluation.

Reduction of the alternative procedural candidates for accomplishing each of the three package one Data Link services is the purpose of this phase of testing. The three package one services to be evaluated are:

1. Initial Contact,
2. Transfer of Communication, and
3. Terminal Information

8.2 Duration.

The test duration per Mini-Study subject team (from one to four controllers at a time, given availability) is one week. The test duration for completion of the three package one Mini-Studies is three weeks.

8.3 Method.

The main Operational Test and Evaluation (OT&E) technique to be used for the Mini-Studies is called Subjective Workload Assessment Technique (SWAT). "Projected" SWAT will also be utilized. These techniques calibrate expert subjects prior to event testing. Subjects are asked to visualize the "mental workout" for their jobs at three levels of difficulty (1=Low, 2-Mid, 3=High) for three factors: time, mental effort, and stress (TES). This 3x3 matrix gives 27 combinations which are ranked by the expert subjects according to degree of mental workload (from TEST=111 to TES=333). This ranking is normalized by Monotonic Analysis of Variance Techniques (MANOVA) and scaled by goodness-of-fit tests to become interval-type percentile scores. Thus, each of the 27 matrix combinations' rankings equals a percentage of workload capacity; (e.g., TES=122 = 45% workload, TES=322 = 85% workload). In this way, each subject is self-calibrated for any future SWAT or Pro-SWAT rating he should give at workload events. This calibration is performed once before testing, but should be checked at the end of the test to assure consistency.

The Mini-Studies are divided into two phases: The "projected" or Pro-SWAT phase, and the SWAT phase. Pro-SWAT is the same technique as SWAT, but utilized for the evaluation of "projected" events.

Subjects are given a short demonstration of the candidate procedures (not in dynamic simulation) and asked to visualize the ramifications of using them. Pro-SWAT ratings are used to reduce the number of permutations of procedural alternatives. After Pro-SWAT, the resultant optimal procedures are subjected to an evolutionary SWAT evaluation in real time simulation. The most practical counterbalanced SWAT repeated measures design will be utilized for the simulation depending on subject availability and option multiplicity.

The following prerequisites must be completed prior to commencement of the Mini-Studies:

1. System verification
2. Dry runs with available controllers to:

    1. Determine Test Bed readiness,
    2. Validate system measurement techniques,
    3. Refine observer and interviewer techniques,
    4. Incorporate controllers' comments.

The following five types of measurement data are proposed:

1. Workload - using SWAT (Subjective Workload Assessment Technique) and pro-SWAT metrics.

2. Performance - using NSSF SEL computer data.

3. Preference - using questionnaires and interviews.

4. Acceptability - using questionnaires and interviews.

5. Physiological and embedded tasks (if appropriate).

8.4 Procedures.

Several programs at the FAA Technical Center have field controllers scheduled in the near future. The Mini-Studies will use these controllers on an "as available" basis, otherwise in-house controllers will be used. Initially, the subjects (up to four at a time) are given a background questionnaire prior to orientation. After orientation the subjects are familiarized with SWAT. SWAT profiles are obtained which will be used as a baseline for all subsequent SWAT and Pro-SWAT tests. Next, subjects are trained on the Data Link procedural options in the sector. Pro-SWAT ratings are taken, "visualizing" utilization of the candidate procedures. This technique eliminates by consensus any untenable options and reduces the number of options for phase two. During phase two, one or two simulated aircraft at a time are run through the sectors for dynamic simulation of control events per procedure. SWAT and other controller subject data collected to evaluate each procedure to find the optimum recommendation for full-scale simulation testing.

8.5 Scenarios.

In essence, they are mini-scenarios tailored for each service evaluated. The mini-scenarios will involve only one or two aircraft at a time in the NSSF for the Mini-Studies. For Pro-SWAT, only the pilot/controller interchange aspects are evaluated in the NSSF per procedure (although the ramifications are "visualized"). For SWAT, the entire gamut of control events is evaluated in the NSSF per procedure.

The scenarios will consist of an array of interactive controller activities. Normal operations, such as handoffs and vectors could have an affect on a particular procedure if given in close proximity to the service evaluated. Weather instigates complex control activity. Pilot/controller decision reversals should be simulated. Errors by pilot, controller, and the Data Link system must be addressed. Lack of pilot response and processing delays may disrupt the system. Conflicts should be planned to see if resolution is accomplished. An embedded task may determine time available for accomplishment of this resolution.

The scenarios are driven primarily by simop scripts, but are also driven by observer scripts to inform the controller that the controller has changed his mind or must perform some other activity.

8.6 Data Collection.

The following tests will result in quantitative metrics:

1. Pro-SWAT and rating scales for acceptability tests
2. SWAT mental workload tests
3. Performance measures
4. Structured interviews
5. Questionnaires.

Pro-SWAT is a subjective test to determine the best procedural options. The options are listed in appendix D. Pro-SWAT data is necessary to reduce the options to a few choice candidates for the SWAT tests. For instance, a binary choice for 13 variables results in over 8,000 test permutations.

SWAT mental workload tests result in interval data for estimates of workload, and post-run structured interview rating scales. Also, observer data details controller comments and system glitches.

The NSSF SEL computer counts and compares all pilot and controller actions, durations, and system criteria violations. These performance measures will be recorded, reviewed, and documented.

8.6.1 Test Subjects/Observer Questionnaires.

There are four types of controller questionnaires:

1. Preliminary questionnaire - to determine subject background and attitude.

2. Post-training questionnaire - to determine readiness for testing or if more training is required.

3. Post-run questionnaire - a structured interview questionnaire for comments concerning the run.

4. Wrap-up questionnaire - for overall summation.

The observers will assist the subject controllers as well as take data. They will note the number and type of "help" queries and comments. Impromptu comments are encouraged and logged during the test. Comments will be discussed at the end of the session and a structured interview will be administered. Observers will document:

1. Controller comments during the data runs.
2. System operational adequacy during runs.
3. Controller's understanding of the concept evaluated.
4. Assistance given.

8.6.2 Data Reduction and Analysis.

Different methodologies will be utilized for data collection.

1. Pro-SWAT and SWAT scores - Support contractors will provide software and training to accomplish conjoint/measures. ANOVA, MANOVA, t-test (statistical analysis techniques for data reduction).

2. Performance scores - typical accuracy and timeliness data will be collected and retained in the NSSF SEL computer. Univariate 1-way ANOVA. Post hoc test on means.

3. Preference and acceptability ratings - ANOVA tests on rating scales. Nonparametric tests.

4. Narrative comments will be organized to see how many controllers made similar observations.

8.6.3 Test Results.

Results from the Pro-SWAT, and SWAT phases of the Mini-Studies will be documented in written reports. Data will be analyzed for incorporation into the full-scale simulation Data Link Operation Evaluation for package one.

8.7 Facilities.

The following facilities will be utilized:

1. NSSF - simulated Terminal TRACON. Four Plan View Displays (PVDs) are available using adaptation compatible with the ARTS IIIA airspace that is defined.

2. VAX Lab - Data Link message processing.

3. ARTS IIIA Computer System.

9.0 OPERATIONAL EVALUATION.

9.1 Purpose.

1. To define Data Link functions and procedures in the context of full-scale ATC operations.

2. To develop functional requirements for a technical data package for Data Link implementation.

9.2 Duration.

The operational evaluation phase for Package One is expected to span four months.

9.3 Method.

The operational evaluation phase will comprise of full-scale simulation exercises. The simulation exercises will be conducted using realistic traffic scenarios. The NSSF will be used in these exercises to provide the needed pilot-controller interactions. Data Link avionics equipment, currently under development at the FAA Technical Center may be used in these exercises.

9.4 Test Conduct.

Under the operational evaluation phase, air traffic control exercises will be run using realistic traffic scenarios representing actual situation normally occurring in TRACONs. Field controllers, who will be the main test subjects in these exercises, will provide qualitative and quantitative data on the suitability and impact of introducing Data Link into the terminal system.

Initially, the tests will be conducted using the TTG at the FAA Technical Center. Subsequently, adaptations of actual terminal centers will be used. The Atlantic City TRACON adaptation is a likely candidate because a special HCS build for this adaptation is now under development at the FAA Technical Center. Using actual field adaptations, and preferably controllers familiar with these

adaptations, offers the opportunity to improve the realism of the exercises and the relevance of test results.

Each scenario will be re-run several times to provide a basis for comparison of Data Link options and the evaluation of their operational suitability. Initially, runs will be made with the Data Link function inhibited to provide a baseline against which the impact of Data Link can be measured. Subsequently, runs will be made using various acceptable options of Data Link as concluded through the Mini-Studies. These options refer to modes of Data Link operations, e.g., manual vs. automatic activation of uplinks; controller display features, e.g., and system parameter selection, e.g., timeouts for non-receipts of expected pilot responses.

The exercises will be run using various mixes of Data Link-equipped and non-equipped aircraft to help assess the impact on controller workload of having to distinguish between the two types. The Test Bed will be configured to represent realistic uplink and downlink transmission delays expected to occur in the field due to antenna rotation and communications processing overhead. These delays will be randomly distributed with a predetermined mean and standard deviation.

The test subjects, who for the most part will be field controllers, will operate the four controller positions in the FAA Technical Center ARTS lab, and will communicate with the simulation pilots in the NSSF. Each controller will be accompanied by a test observer who will make notes of all relevant test events. A debriefing session will take place following each lab exercise to review test results and controllers' reactions.

9.5 Test Scenarios.

A series of traffic scenarios simulating realistic air traffic control situations will be developed. The scenarios will be designed to represent situations involving the three Data Link services of package one. The scenarios will represent varying levels of difficulty from the standpoint of controller workload and decision making.

Each scenario will span approximately one hour and include a 15-minute period to allow for traffic buildup.

A controller/pilot script will be developed for each exercise. This script will specify controller and pilot actions that need to take place during each exercise in order to enhance test realism or activate desired Data Link functions. For example, the scripts will call for pilot requests for altitude assignments, pilot requests for weather information, and controller activation of specific Data Link options.

9.6 Data Collection.

The data collected will be of two types:

1. Computer recorded data.

2. Controller/observer questionnaires/debriefings.

The computer recorded data will provide a log of all Data Link communications, flight data, and radar data in the ARTS IIIA Computer System, VAX Computer, and the NSSF.

The controller/observer questionnaires/debriefings will be used to log controller reactions and preferences to the various options of Data Link. These questionnaires will be especially designed to address specific Data Link issues and obtain data to support test analysis. During the test exercises, the questionnaires will be filled out by the test observers while the controllers work the traffic. Additional data on controllers' and observers' reactions will be recorded during the briefing sessions.

9.7 Data Reduction and Analysis.

The data analysis will attempt to draw significant conclusions from the recorded data. Some conclusions will be of a qualitative nature while others will be quantitative. The latter will be based on the following measures:

1. Controller workload (in terms of voice communications and keyboard entries).

2. Controller preference.

3. Human factors (TBD).

9.8 Test Results.

Test reports will be prepared documenting events and results of each test exercise.

A final test report will be issued at the completion of the operational evaluation phase.

10.0 RESULTS - TECHNICAL DATA PACKAGE.

The Technical Data Package (TDP) will contain the functional hardware and software requirements for operational implementation of Data Link in the ARTS IIIA Computer System. The functional requirements in the TDP will pertain to the Ground Data Link Processor (GDLP), the ARTS IIIA, and the interface between the two systems. The TDP will include the following elements:

Functional Specification,
Interface Requirements,
Design Guidelines,
ARTS IIIA Software Changes,
Data Link Applications Standard.

The Functional Specification will include a description of the software design for the GDLP and the ARTS IIIA for the package one services: Transfer of Communication, Initial Contact, and Terminal Information Service. After operational testing is concluded, the Data Link Test Bed options will be reviewed using the controller preferences and the analysis data obtained during Data Reduction. The selected options for the operational Data Link will be included in the functional description. In addition, the support software modifications for Data Link will be specified. The existing documentation from the Test Bed development will be used as much as possible. The Functional Specification will use the current definition of the GDLP functions and avoid duplication of functions between the GDLP and the HCS. It will also functionally describe the Data Link messages that will be transferred between the HCS and the GDLP.
The Interface Requirements will include a description of the message protocol for the data exchanged between the ARTS IIIA and VAX.

Design Guidelines will be established to ensure correctness, reliability, efficiency, and maintainability of the software and to adequately plan and execute the software development process. The guidelines will support system modification, enhancement, and expansion as necessary for adding new Data Link services.
The TDP will also include a description of the ARTS IIIA design and modifications as implemented in the Data Link Test Bed. These modifications will be used to develop the operational implementation of Data Link as much as possible.