COPY 1

5

DOT/FAA/CT-ACD33093/8

Satellite Voice Trials Test Plan

William C. Wanner

AVAILABLE IN ELECTRONIC FORMAT

June 1993

FEDERAL AVIATION ADMINISTRATION
TECHNICAL CENTER LIBRARY
ATLANTIC CITY INTL AIRPORT, NJ 08405

Engineering, Research, and Development Service
Directorate for Aviation Technology
FAA Technical Center
Atlantic City International Airport, NJ 08405

DOT/FAA
/CT-ACD
33093/8
c.1

FAA WJH Technical Center
Tech Center Library
Atlantic City, NJ 08405

AVAILABLE IN
ELECTRONIC FORMAT

SATELLITE VOICE TRIALS TEST PLAN

William C. Wanner

July 21, 1993

Table of Contents

		Page
EXECUTIVE SUMMARY		iii
1.0	INTRODUCTION	1
1.1	Objective	
1.2	Document Organization	1
1.3	Background	2
1.3.1	Satellite Data Communications vs. Satellite Voice Communications	2
1.3.2	Satellite Voice Communications vs. High Frequency (HF) Voice Communications	3
1.3.3	Unresolved Aspects of Satellite Voice System	3
2.0	RELATED DOCUMENTATION/PROJECTS	4
3.0	EQUIPMENT	4
3.1	Satellite System	4
3.2	Satellites	5
3.3	Ground Earth Stations	5
3.4	Airline	5
3.5	Aircraft	5
3.6	Avionics	5
3.7	Cockpit Interface	6
3.8	Data Collection Equipment	6
3.8.1	Aircraft Data Collection Equipment	6
3.8.2	Ground Data Collection Equipment	6
4.0	DATA COLLECTION PARAMETERS	7
4.1	Voice Recordings	7
4.2	Call Setup Time	7
4.3	Voice Intelligibility	7
4.4	Voice Connection Success Rates	7
5.0	DATA REDUCTION	7
6.0	TEST CONFIGURATION	8
6.1	Test Configurations	8
6.2	ARTCC Location	8
6.3	ARINC Comm Center Locations	8

		Page
7.0	TEST DESCRIPTIONS	8
7.1	General	8
7.1.1	Dialing Procedures	9
7.1.2	Pilot Interface for These Trials	9
7.2	Ground Test	10

APPENDIXES

A - Phase I Test Description
B - Phase II Test Description
C - Cockpit Interface Description
D - Questionnaire
E - Voice Intelligibility Scores
F - Log Sheets

EXECUTIVE SUMMARY

Current high frequency (HF) voice-based oceanic systems have supported aviation users adequately in the past; however, ever increasing traffic congestion and message throughput requirements will continue to strain this HF voice-based system.

With the advent of aeronautical satellite data and voice communications, it becomes necessary to evaluate their performance as a potential oceanic air traffic control (ATC) communications system. This test plan, to be executed by the Federal Aviation Administration Technical Center (FAATC), Aeronautical Radio Incorporated (ARINC), Communications Satellite Corporation (COMSAT), and Northwest Airlines details the evaluation of the voice portion of the Aeronautical Mobile Satellite Service (AMSS). The potential emergency communications, non-routine communications, and backup to satellite data communications would utilize this voice service. The evaluations will not only focus on the reliability and intelligibility of satellite voice, but will also look at operational and procedural impacts of satellite voice upon oceanic ATC communications.

Satellite Voice Trials Schedule

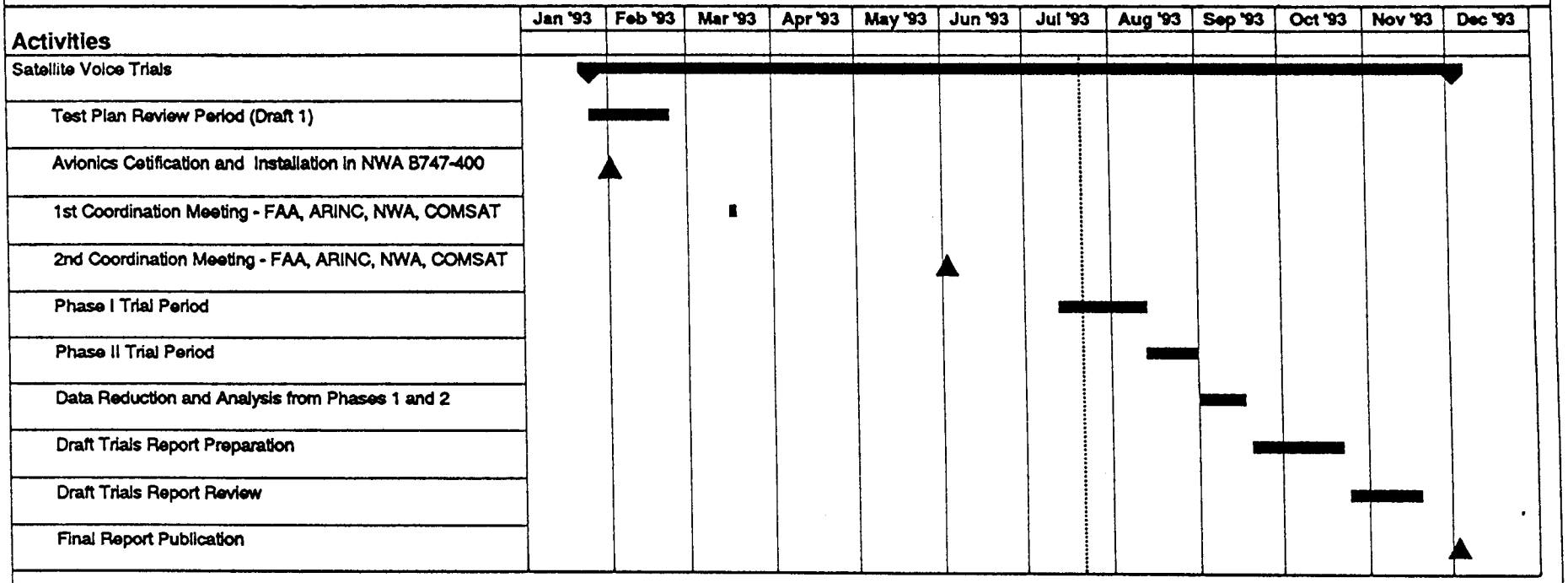

Project: Satellite Voice Trials
Date: 7/21/93

Activity in Progress — Milestone — Summary

Summary of Satellite Voice Trials

Phase	Objective	Benefits	Configuration	Parameters Measured
I	1. technically evaluate satellite voice communication	1. reduction in message errors due to better voice quality 2. faster pilot/controller access times than most HF contacts 3. greater channel capacity than HF	evaluation will be between the aircraft, ARINC Comm Center, and the FAATC	1. call setup time 2. voice intelligibility 3. voice connection rates
II	1. technically evaluate satellite voice communication 2. evaluate direct pilot/controller voice communications (including via the ARINC Comm Center)	1. benefits of phase I 2. more timely reporting of emergency and non-routine situations	evaluation will be both from the aircraft directly to the FAATC and from the aircraft to the FAATC via the ARINC Comm Center	1. call setup time 2. voice intelligibility 3. voice connection rates

1.0 INTRODUCTION

1.1 Objective

Both satellite data and satellite voice are expected to play an important role in the future oceanic air traffic control environment. The role that each form of communication will play is being discussed by the Federal Aviation Administration (FAA) Satellite Operational Implementation Team (SOIT). The use of digitized voice via satellite for air traffic services (ATS) is one part of the FAA Satellite Operational Implementation Plan, currently being written by participants of the SOIT. The objective of the trials described herein is to demonstrate the use of digitized voice communications via satellite in emergency and non-routine situations, and as a backup to satellite data. These trials will consist of two phases. The first phase will examine the use of satellite voice communications between the pilot and the Aeronautical Radio Incorporated (ARINC) radio operator (RO) located in the ARINC Comm Center. In this phase of the trials the pilot procedures will have a minor change while controller procedures will remain unchanged. However, during the second phase of the trials, the pilot will directly contact the FAA Technical Center (FAATC), which will act as the Air Route Traffic Control Center (ARTCC). During this phase of the trials the pilot will either call the FAATC or will contact the FAATC via the ARINC Comm Center, and therefore, in the first instance, both the pilot and the controller procedures will change. The trials will also assess the advantages and disadvantages of having direct pilot-controller communications, and will solicit opinions from pilots, RO's, and possibly controllers on the quality of satellite voice and the impact that satellite voice may have upon them. Finally, these trials will demonstrate the feasibility and level of performance of satellite voice in the air traffic control environment.

1.2 Document Organization

Section 1: This section contains background information on satellite communications and, specifically, satellite voice.

Section 2: The related documents and projects are listed in this section.

Section 3: All equipment used for the trials is described in this section. The equipment includes the aircraft, satellite subnetwork, terrestrial networks, and user interfaces.

Section 4: The data collection parameters that will be collected and analyzed are described in this section.

Section 5: This section defines how data reduction will be handled for each test.

Section 6: The test configurations for the trials are explained in this section.

Section 7: General information for the tests are explained in this section. Also, the ground test is described in this section.
Appendix A: The Phase I detailed test description is contained in this appendix.

Appendix B: This appendix contains the Phase II detailed test description.

Appendix C: This appendix contains the description of the cockpit interface in the Northwest Airlines aircraft.

Appendix D: The questionnaire to be filled out by the pilots is contained in this appendix.

Appendix E: A description of the ICAO readability scale that will be used by participants in the test to give a score for the satellite voice calls.

Appendix F: The log sheets used by the particiapants in the test to record the parameters that will be collected in the test.

1.3 Background

1.3.1 Satellite Data Communications vs. Satellite Voice Communications

Satellite data communications are expected to replace high frequency (HF) voice communications and handle the bulk of routine contacts between the controller and cockpit in the future air traffic control (ATC) environment. However, many emergency and non-routine situations exist where satellite voice will be the preferred method of communications.

The well-defined structure of the formats of typical data messages, coupled with data communications' ability to drive end systems, make it an attractive system for routine ATC communications. The structure and consistency will help eliminate errors (call sign problems, misinterpretation, etc) associated with present day voice communications. The ability of data communications to drive end systems will allow these systems to monitor and assess the oceanic environment to levels of detail not currently possible with converted HF voice messages.

However, the very rigid structure of data communications becomes a burden in non-routine and emergency situations. In such situations, communications tend to be diagnostic and a detailed description is essential. Large amounts of information may need to be transmitted, and the information that is transmitted may be very atypical to the aeronautical environment (e.g., a medical emergency). To preclude the cumbersome and lengthy "free text" entry of this type of information into a data link communications system, it would be advantageous to use satellite voice communications in such circumstances.

The following is a list of potential situations, by no means exhaustive, in which satellite voice could be the preferred medium of communications.

1) Emergency Situations
    a. Medical
    b. Equipment failure (loss of engine)

c. Cargo compartment fire
d. Fuel leak
e. Loss of cabin pressure
f. Hijacking

2) Non-Routine Situations
a. Weather difficulties
b. Maintenance/equipment questions
c. Emergency ATC communications

Additionally, satellite voice is a capable operational back-up to satellite data for routine communications if the satellite data system faults lie within the data portion of the satellite subsystem or within the ground data networks.

1.3.2 Satellite Voice Communications vs. HF Voice Communications

Satellite voice communication has the potential to offer many benefits for use as an oceanic ATC communications system. Not only will it solve problems encountered in the current HF voice system, but it also offers many benefits beyond the capabilities of the current HF system. The combination of satellite data and satellite voice together could provide additional benefits in the oceanic airspace, such as a possible reduction in separation standards and the ability of the aircraft to fly more desirable routes.

Due to its lower sensitivity on weather and atmospheric conditions, the digitized voice communications associated with the satellite system should offer substantially better and more consistent voice quality than HF voice communications. The digital voice encoding scheme, channel error correction, and dynamic power adjustment capabilities of the satellite system all combine to provide users with near-toll quality voice communications.

Since the satellite system is capable of assigning voice channel frequencies on demand, the satellite voice system would alleviate the need for cockpit members to constantly adjust, retune and fine tune HF radios. The satellite system should offer cockpit members quick access to ARINC radio operator (RO) without the waiting time associated with busy HF frequencies. The same is true when the RO is out of the loop and direct pilot-controller communication is utilized. The use of satellite communications should have the additional effect of reducing the demand for HF channels thereby effectively lowering the frequency congestion of this system.

1.3.3 Unresolved Aspects of the Satellite Voice Service Not Solved by These Tests

While there are many apparent benefits to satellite voice communications there still remain many unresolved issues that are being addressed by various industry groups. Though all of these issues will not be resolved by these tests, several issues will be evaluated during these tests.

The telephone signaling nature of the satellite voice service generates many questions

concerning the implementation of satellite voice into the cockpit of an airplane. In contrast to the radio environment of HF voice, calls over the satellite voice system are placed just like an ordinary telephone call; this does not mean that the pilot needs to dial a phone to talk to the controller. The dialing function could easily be accomplished in the satellite avionics or multi-control display unit (MCDU). The only requirement is that the correct ATC telephone number be generated on the aircraft and transmitted to the ground. The type of handset to be used, its integration with other cockpit audio systems, and the steps required to actually place and receive the calls are all cockpit procedure issues that are, to some extent, airline/airplane manufacturer dependent. This test plan focuses on quality testing of the satellite voice link and its potential use in oceanic air traffic control. However, any cockpit implementation test scenarios must be developed with the airline(s) participating in these tests.

Additional unresolved aspects include detailed numbering, priority, and signaling issues within the satellite subsystem. The resolution of these particular satellite subsystem issues will not have an impact on voice quality but may have significant effects upon call setup times. Due to the lengthy process of standards alteration and actual implementation of any changes, it will not be possible to test these satellite subsystem issues within the context of these voice trials. Another issue is the determination of conditions under which a pilot or a controller would use satellite voice instead of satellite data. Procedures must be established which define a non-routine or emergency situation.

2.0 RELATED DOCUMENTATION/TRIALS

1. Pacific Engineering Trials
2. Draft Section 8 of the International Civil Aviation Organization(ICAO) Aeronautical Mobile Satellite Service (AMSS) Standards and Recommended Practices (SARPs)
3. International Maritime Satellite Organization (INMARSAT) AMSS System Definition Manual (SDM)
4. ARINC Characteristic 741
5. RTCA Special Committee 165 Minimum Operational Performance Standards (MOPS) for AMSS
6. Circuit Mode Call Setup Test Results for AMSS Panel by Richard Wank; AMSSP/WG-A/3-WP/7, July 1991
7. Communication Satellite Corporation (COMSAT) Aeronautical Services User's Instructions for Air to Ground Calling, May 1991
8. COMSAT Aeronautical Services User's Instructions for Ground to Air Calling, May 1991

3.0 EQUIPMENT

3.1 Satellite System

The satellite system to be used in these trials is the INMARSAT satellite system. This system provides global mobile aeronautical coverage (except in polar regions) through the use of four geostationary satellites. The complete description of this system is contained

within the INMARSAT AMSS System Definition Manual (SDM).

3.2 Satellites

The tests will utilize the Pacific Ocean Region (POR) satellite and the Atlantic Ocean West (AOR-W) satellite. The satellites being used are the second generation INMARSAT satellites, INMARSAT II's. Presently, there are no plans to conduct these trials in the Atlantic Ocean Region. However, the coverage of the AOR-W satellite overlaps into the POR, so there is a chance that the aircraft may log on to the AOR-W satellite before handover to the POR satellite.

3.3 Ground Earth Stations

The following INMARSAT Signatories and their associated Ground Earth Stations (GESs) will participate in these tests:

Pacific Ocean Region:

1: COMSAT - Santa Paula, CA, USA
2: Singapore Telecom - Sentosa, Singapore

Atlantic Ocean West Region:

1: COMSAT - Southbury, CT, USA
2: British Telecom - Goonhilly, U.K.

3.4 Airline

In conjunction with the FAA Technical Center, COMSAT, and ARINC, the tests will be conducted by the following airline:

Northwest Airlines

3.5 Aircraft

Each aircraft participating in these tests will have either been commissioned to operate a high gain voice system in the INMARSAT satellite system or will obtain a waiver to temporarily do so. Each aircraft will also have received approval from the appropriate FAA organizations. The following aircraft will be utilized by each of the airlines participating in these tests:

Airline: Northwest Airlines

Airplane A: Boeing 747-400

3.6 Avionics

Each set of satellite communication (SATCOM) avionics used in these tests must have obtained type certification for use on board the given aircraft and have been access approved and commissioned for use within the INMARSAT satellite system. The following is a list of all avionics to be used by each aircraft participating in these tests.

Equipment configuration A:

Airline: Northwest Airlines
Aircraft: Boeing 747-400

High Gain Antenna: Toyocomm

Low Noise Amplifier(LNA)/Diplexer: Toyocomm

Beam Steering Unit: Toyocomm

High Powered Amplifier: Honeywell-Racal

Radio Frequency Unit: Honeywell-Racal

Satellite Data Unit: Honeywell-Racal

Cockpit Handset: Global Wulfsburg

3.7 Cockpit Interface

The cockpit interface is a Global Wulfsburg handset. The interface is described in Appendix C.

3.8 Data Collection Equipment

3.8.1 Airplane Data Collection Equipment

All aircraft participating in the voice trials will be equipped with an audio tape recorder to record all satellite voice conversations that occur in conjunction with these tests.

Certain tests will require the use of a cockpit observer (most likely from ARINC air/ground operations) to minimize the amount of effort required by pilots who participate in these tests. This cockpit observer will have the ability to record/write observations made by himself/herself and/or the flight crew. Additionally, he/she will possess a stopwatch to record air-to-ground call set up times (as described in Appendix A and Appendix B).

3.8.2 Ground Data Collection Equipment

All ARINC Communication (Comm) Centers are currently equipped with tape recorders to

record all satellite conversations that occur in conjunction with these tests. Tape recorders will also be used at the FAATC (the simulated ARTCC).

4.0 DATA COLLECTION PARAMETERS

4.1 Voice Recordings

All uplink and downlink conversations will be recorded on cassettes located in both the cockpit, at the ARINC Comm Center, and at the FAATC. These voice recordings may be used to generate additional input from people unable to participate in the live tests. Pilots will listen to the tapes recorded in the cockpit and controllers will listen to tapes generated at the FAATC.

4.2 Call Setup Time

As detailed in section 1.2.3, the satellite voice system operates like a telephone system, requiring the user to dial phone numbers when placing a call (exactly how a call is placed is described in section 7.1.1 and Appendix C). Due to the telephone characteristics of the system, there is a period between the initiation of the call and the actual start of the communications. This period is referred to as the call setup time. Call setup times exist in both the air-to-ground and the ground-to-air directions. As an example, ground-to-air call setup times to simulators have been previously measured to be about 12 seconds [Reference 6].

Different call setup times will be measured for each phase of the trials and for different connection paths. Phase I call setup times will be measured for the satellite subnetwork, and from the GES to the ARINC Comm Center. Phase II call setup times will be measured for the satellite subnetwork, from the GES to the ARINC Comm Center, and from the comm center to the FAATC. Phase II call setup times will also be measured for the satellite subnetwork, and from the GES to the FAATC, when that configuration is employed.

4.3 Voice Intelligibility

Voice intelligibility will be measured in accordance with ICAO readability scale as listed in Appendix E and a general questionnaire (Appendix D) for individual flights. Specific attempts will be made to measure the voice intelligibility when the aircraft is flying at or near the expected edge of satellite coverage area by scheduling voice contacts when that situation occurs.

4.4 Voice Connection Success Rate

The voice connection success rate measures the number of attempts needed to successfully route the call to the correct destination. This parameter is related to the call setup time.

5.0 DATA REDUCTION

Data reduction will be specific for each test performed. This is described in Appendix A and Appendix B.

6.0 TEST CONFIGURATION

6.1 Test Configurations

Figure A-1 and Figure B-1 show the test configuration for each phase of the test.

6.2 ARTCC Location

FAATC located in Atlantic City, NJ will act as the simulated ARTCC for these trials.

6.3 ARINC Comm Center Locations

The ARINC Comm Centers are located in Foster City, CA, Honolulu, HI, and Bohemia, NY. All flights of the test will be in the Pacific Ocean Region.

7.0 TEST DESCRIPTIONS

7.1 General

The flight tests for these trials will be conducted in two phases. During Phase II the FAATC will act as the ARTCC.

ARINC currently has a Public Swithced Telephone Network (PSTN) telephone line between the Santa Paula GES and the ARINC Comm Center. This line will be utilized in both phases. A dedicated voice line will also be installed between the Santa Paula GES and the FAATC. This line will be used only for Phase II. For Phase II an existing line at the FAATC connected to the ADNS network will be utilized.

NOTE: If a cockpit observer is present during a flight, then the cockpit observer will perform the data collection duties of the pilot.

Call setup times for these trials will be recorded by equipment at the GES and by the pilot. The GES is capable of measuring the call setup time for the satellite subnetwork and for the terrestrial network. The pilot will use a stopwatch to measure the call setup times for the end-to-end link in the air-to- ground tests.

Several days before a flight test, all personnel for this test (includes personnel at ARINC, COMSAT, FAATC, and Northwest Airlines) will be informed of the time and the duration of the test. This will be done in time for all the personnel to have an opportunity to setup all necessary equipment for the tests. All personnel will be contacted on the day of the test to ensure that the necessary equipment is ready for the test.

When possible, a cockpit observer will be on board the aircraft for the duration of a test

flight. The cockpit observer will:
1. alert the crew when a call is to be made;
2. answer a call if a member of the crew is not able to answer it;
3. tell the crew the number to call;
4. record all scores and observations on a log sheet;
5. ensure that calls are being recorded on the cockpit tape recorder;
6. measure end-to-end call setup time with a stopwatch.

7.1.1 Dialing Procedures

The following dialing procedures are based on the COMSAT user guide for ground-to-air and air-to-ground dialing.

1. Ground-to-Air Call Dialing Procedure

Any aircraft that is logged on to the INMARSAT system and is equipped with the appropriate avionics can be called. First, dial the international dialing prefix. Next, dial the access code, which corresponds to the ocean region which the aircraft is flying and is equivalent to a country code. The final numbers to dial is an eight digit aircraft identification number. This number is based on the 24-bit ICAO address for the aircraft.

Example:

This example is for an aircraft flying in the POR with an aircraft ID number of 87654321.

a. Dial 011
b. Dial 872-5 (this corresponds to the access code for the POR)
c. Dial 87654321

Therefore, the entire phone number is: 0118725876543212.

NOTE: For these trials all the fields in the above example are valid except for the aircraft ID field.

2. Air-to-Ground Dialing Procedure

For dialing in the air-to-ground direction the pilot needs only to dial a two digit code. This code is not a speed dial code programmed into the handset but is a code programmed into the GES, specifically for these trials. Programming the code into the GES allows the pilot to be able to dial the same code regardless of the ground destination of the call. The routing of the call is accomplished at the GES.

The code dialed by the pilot will be supplied by COMSAT. This code and procedure for dialing will be specified in a bulletin to the pilots.

7.1.2 Pilot Interface for These Voice Trials

In the cockpit the pilots will be placing and receiving calls via a handset. This handset is shown in Figure C-1 in Appendix C of this test plan. However, there are several concerns about the use of a handset by the crew in these trials. Some of these concerns are:

1. One hand of the pilot is tied up holding the handset, therefore making it difficult for the pilot to transcribe messages received over the satellite voice.

2. Only one crew member will be able to hear the conversation using a handset. Since the main use of satellite voice will be for emergency and non-routine situations, it would be useful in such a stressful situation for more than one crew member to hear the directions from a controller.

The handset is not the envisioned pilot interface for the future satellite voice system. It is anticipated that satellite voice will be incorporated into the cockpit audio system.

7.2 Ground Test

7.2.1 Objective

This test will verify that the SATCOM equipment is operating properly. All ground tests should be performed no more than five days (5) prior to the actual voice trials.

7.2.2 Description

The date of this test will depend upon the availability of the aircraft. This availability is dictated by the schedule of the airline.

Each leg of the system needs to be evaluated during the ground test. This means that calls must be made in the following scenarios:

1. From the aircraft to the ARINC Comm Center
2. From the ARINC Comm Center to the FAATC
3. From the aircraft to the FAATC via the dedicated line
4. From the FAATC to the aircraft via the ARINC Comm Center
5. From the FAATC to the aircraft via the dedicated line

Proper operation of the ADNS circuit to the FAATC should also be verified.

Proper operation of each leg of the system must be verified before flight testing can begin. During the ground tests, the same data that will be compiled during flight tests should be collected.

Appendix A - Phase I Test Description

Objective

Phase one will be conducted to technically evaluate the satellite voice system. The test configuration for this phase is shown in Figure A-1. The parameters to be assessed include: (1)call setup time, (2)voice intelligibility, and (3)voice connection rates (i.e., the number of times a call needs to be placed to reach its destination), and (4) signal units of the satellite subnetwork recorded at the COMSAT GES will also be analyzed. The call setup times will be measured within the satellite subnetwork, between the GES and the ARINC Comm Center, and for the end-to-end link. Voice intelligibility will be measured using the ICAO readability scale shown in Appendix E.

Benefits

1. Reduction in message errors due to improved voice quality

2. Faster pilot/controller access time

3. Greater channel capacity

Description

All calls will be generated in the cockpit and will be directed to the ARINC Comm Center. The airline will be furnished with a quick dial code by COMSAT for the Comm Center's satellite phone circuit. This code should be loaded into the handset's memory so the pilot can dial the Comm Center using the least number of digits possible. This code will be provided by COMSAT. One call will be made per hour (immediately following the mandatory HF position report). During the call, the pilot will repeat the HF position report he just gave over HF radio. Both of these position reports will be directed via the ADNS network to the FAATC ADNS drop. The address of the FAATC ADNS drop is ACYXGXA.

NOTE: Though the HF position report is being reported directly to the simulated controller at the FAATC, this does not mean that an actual controller (at the ARTCC) will accept position reports or other routine requests directly from the pilot.

Air-to-Ground Tests

After the pilot reports the aircraft position over HF radio he will again report the position via satellite voice. Before making the satellite voice call, the pilot will turn on the audio tape recorder in the cockpit to record the conversation; after that he will record on the log sheet the time (to the minute in UTC) of the call placement. When the pilot finishes dialing the code, he (or the cockpit observer, if there is one present) will begin recording with a stopwatch the end-to-end call setup time. When there is an indication that the call is available to the RO, the pilot (or cockpit observer) will stop timing and will record on the log sheet the measured end-to-end call setup time. To start the test, the pilot will state that the call is for the satellite voice trials and will also state the number of the call. For

example, in the first call to the ground by the pilot, the pilot could say, "This is a call for the satellite voice trials, call number one." The RO will acknowledge, and the pilot will report the position of the aircraft just like an HF radio position report. The RO will acknowledge, and both parties will then hang up.

After both parties hang up, the pilot will score the call according to the ICAO readability scale; he will then record the score on the log sheet. The RO will also record on the log sheet his score according to the ICAO readability scale.

The following is a chronological summary of the procedures for the Phase I air-to-ground test:

1. Pilot makes mandatory HF position report.
2. The radio operator transmits the HF position report via ADNS to the FAA Technical Center.
3. Audio tape recorder is turned on in the cockpit.
4. Pilot makes call to ARINC Comm Center via satellite voice (while simultaneously recording the call setup time)
5. Pilot reports same position report he made over HF radio to the ARINC radio operator.
6. The radio operator transmits the position report via ADNS to the FAA Technical Center.
7. The pilot and the radio operator record in the log sheet the ICAO readability scale score for the call.

Postflight

The pilot will fill out the questionnaire (shown in Appendix D) provided and will attach it to the log sheet. Any other comments from the pilot may also be written on the questionnaire.

The log sheets and questionnaires should be left in the aircraft in the specified location. A NWA employee will be responsible for retrieving the log sheets and questionnaire. Both forms should be sent to Dwight Bowling from NWA in Minneapolis, and finally to William Wanner at the FAA Technical Center.

Data Reduction

The call setup times for uplink and downlink conversations will be recorded. For this phase, the call setup times will be measured within the satellite subnetwork, between the GES and the Comm Center, and for the end-to-end link. Maximum, minimum, and mean/median call setup times for each leg and for the end-to-end link will be calculated. Also, the number of tries to successfully place a call (voice connection success rate) will be analyzed. The HF position reports and the satellite voice position reports will be compared. The signal units recorded at the COMSAT GES for each call will also be analyzed. Finally, the results of the questionnaire will be analyzed.

Maximum, minimum, and mean/median voice intelligibility scores from the pilots and the

radio operators, according to the ICAO readability scale, will also be calculated.

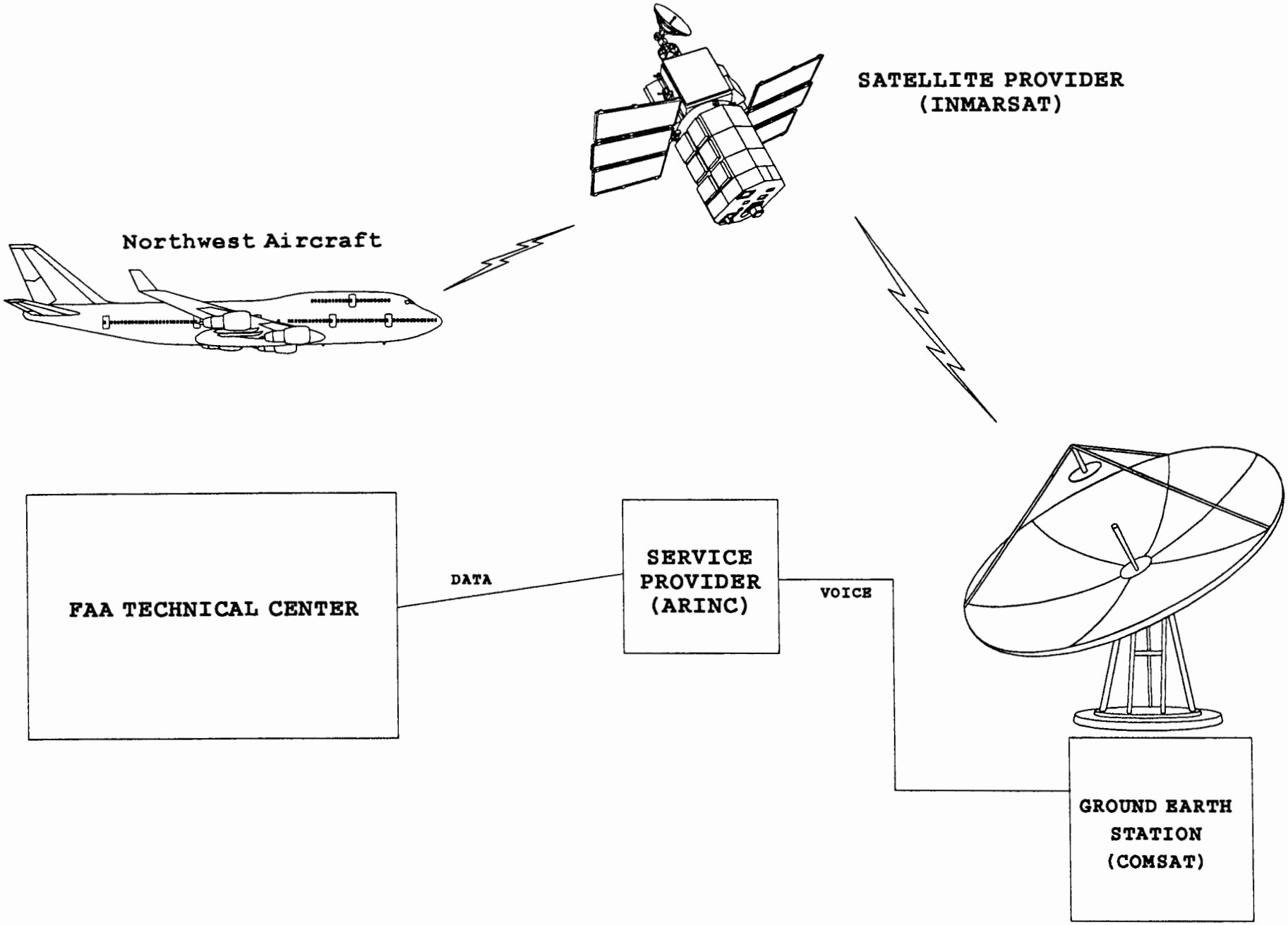

PHASE I TEST CONFIGURATION

Appendix B - Phase II Test Description

Objective

During Phase II of the satellite voice trials the pilot will speak directly to a simulated ARTCC (the FAATC) for each contact made. The test configuration for this test is shown in Figure B-1. The RO will patch the pilot and the FAATC 'controller' lines together for direct communication, the FAATC will call the pilot directly, or the pilot will call the FAATC directly. This will mean a change in procedures for the pilot and the RO. The Phase II tests will evaluate: (1)changes in procedures for the pilot and the RO, and (2) the same technical parameters that were evaluated in Phase I.

Benefits

1. Reduction in message errors due to better voice quality

2. Faster pilot/controller access time

3. Greater channel capacity

4. More timely reporting of non-routine and emergency situations

Description

As in Phase I of the trials, the pilot will make air-to-ground calls immediately after reporting the aircraft's position on HF radio. However, in this phase, the call will be routed through the ARINC Comm Center to the FAATC, or directly to the FAATC using the dedicated line between COMSAT's Santa Paula GES and the FAATC. The link to be tested will be established before the flight begins. However, the pilot does not need to know which link will be tested because he will use the same air-to-ground calling procedures regardless of the link used.

In Phase II, there also will be ground-to-air calling. The call will be initiated by the FAATC 'controller'. The calls will be made several times per flight at various intervals.

NOTE: Though the HF position report is being reported directly to the simulated controller at the FAATC, this does not mean that an actual controller (at the ARTCC) will accept position reports or other routine requests directly from the pilot.

Air-to-Ground Tests (via ARINC Comm Center)

At the time the call is to be made, the pilot will turn on the audio tape recorder in the cockpit to record the conversation; after that he will enter in the log sheet the time (to the minute in UTC) of the call placement. When the pilot finishes dialing the number, he (or the cockpit observer, if one is present) will begin recording with a stopwatch the end-to-end call setup time. When there is an indication that the call is available to the FAATC 'controller' (this will be after the RO patches the call to the FAATC), the pilot will stop timing and will record on the log sheet the measured end-to-end call setup time. To start

the test the pilot will state the number of the call. The FAATC 'controller' will acknowledge, and the pilot will report the aircraft's position the same as the HF position report.

After both parties hang up, the pilot will score the call according to the ICAO readability scale; he will then record the score on the log sheet. After the call, the FAATC 'controller' will also record on the log sheet his score according to the ICAO readability scale.

The following is a chronological summary of the procedures for the Phase II air-to-ground (via ARINC Comm Center) test:

1. Pilot makes mandatory HF position report.
2. Audio tape recorder is turned on in the cockpit.
3. Pilot makes call to ARINC Comm Center via satellite voice (while simultaneously recording the call setup time)
5. Pilot requests the ARINC radio operator to patch the call to the FAATC.
6. The radio operator patches the call
7. The pilot reports his position the same as the previous HF position report.
7. The pilot and the FAATC 'controller' record in the log sheet the ICAO readability scale score for the call.

Air--to-Ground Tests (Directly to FAATC)

At the time the call is to be made, the pilot will turn on the audio tape recorder in the cockpit to record the conversation; after that he will enter in the log sheet the time (to the minute in UTC) of the call placement. When the pilot finishes dialing the number, he will begin measuring with a stopwatch the end-to-end call setup time. When there is an indication that the call is available to the FAATC 'controller', the pilot will stop timing and will record on the log sheet the measured end-to-end call setup time. To start the test the pilot will state that the call is for the satellite voice trials and will also state the number of the call. For example, in the first call to the ground by the pilot, the pilot could say, "This is a call for the satellite voice trials, call number one." The FAATC 'controller' will acknowledge, and the pilot will relate the aircraft's position, the same as the HF position report, to the FAATC 'controller'.

After both parties hang up, the pilot will score the call according to the ICAO readability scale. He will then record the score on the log sheet. After the call, the FAATC 'controller' will also record on the log sheet his score according to the ICAO readability scale.

The following is a chronological summary of the procedures for the Phase II air-to-ground (directly to FAATC) test:

1. Pilot makes mandatory HF position report.
2. Audio tape recorder is turned on in the cockpit.
3. Pilot makes call to FAATC via satellite voice (while simultaneously recording the call setup time)

4. The pilot reports his position the same as the previous HF position report.
5. The pilot and the FAATC 'controller' record in the log sheet the ICAO readability scale score for the call.

Ground-to-Air Tests (via ARINC Comm Center)

The FAATC 'controller' will initiate the call to the aircraft. After the 'controller' finishes dialing the number, he will begin recording with a stopwatch the call setup time. When there is an indication that the call is available to the RO, the 'controller' will stop timing and will record the call setup time. The 'controller' will state that this is a call for the satellite voice trials and he will ask the RO to be patched to the appropriate aircraft. The RO will acknowledge and will then call the aircraft. When there is an indication that the call is being placed, the 'controller' will again begin measuring the call setup time with a stopwatch. When the aircraft answers, the RO will state that a ground-to-air call is being made for the satellite voice trials. The RO will then patch the lines for direct pilot/controller communication. When the patch is complete and the FAATC 'controller' can talk to the aircraft, the FAATC 'controller' will stop timing and will then record the call setup time. The total of the two call setup time measurements is the end-to-end call setup time. The FAATC 'controller' will state the number of the call and the pilot will turn on the audio tape recorder in the cockpit to record the conversation. Each party will acknowledge that they are connected and the pilot will relate the aircraft's position, the same as the HF position report, to the FAATC 'controller'.

After both parties hang up, the pilot will score the call according to the ICAO readability scale; he will then record the score on the log sheet. After the call the FAATC 'controller' will also record on the log sheet his score according to the ICAO readability scale.

The following is a chronological summary of the procedures for the Phase II ground-to-air (via ARINC Comm Center) test:

1. FAATC 'controller' initiates a call to the ARINC Comm Center (while simultaneously measuring call setup time).
2. The FAATC 'controller' requests the call be patched to the aircraft.
3. The RO patches the call.
4. The FAATC 'controller' will ask the pilot to relate the aircraft's position, similar to an HF position report.
5. The pilot and the FAATC 'controller' record in the log sheet the ICAO readability scale score for the call.

Ground-to-Air Tests (Directly to the Aircraft)

The FAATC 'controller' will initiate the call to the aircraft. After the 'controller' finishes dialing the number, he will then begin recording with a stopwatch the end-to-end call setup time. When there is an indication that the call is available to the aircraft, the FAATC 'controller' will stop timing and will record on the log sheet the measured end-to-end call setup time. To start the test, the FAATC 'controller' will state that the call is for the satellite voice trials and will also state the number of the call. The pilot will turn on the audio tape recorder in the cockpit to record the conversation. The pilot will acknowledge and the pilot

will relate the aircraft's position, the same as the HF position report, to the FAATC 'controller'.

After both parties hang up, the pilot will score the call according to the ICAO readability scale; he will then record the score on the log sheet. After the call, the FAATC 'controller' will also record on the log sheet his score according to the ICAO readability scale.

The following is a chronological summary of the procedures for the Phase II ground-to-air (via directly to the aircraft) test:

1. FAATC 'controller' initiates a call to the aircraft (while simultaneously measuring call setup time).
2. The FAATC 'controller' will ask the pilot to relate the aircraft's position, similar to an HF position report.
5. The pilot and the FAATC 'controller' record in the log sheet the ICAO readability scale score for the call.

Postflight

The pilot will fill out the questionnaire provided and will attach it to the log sheet. Any other comments from the pilot may also be written on the questionnaire.

The log sheets and questionnaires should be left in the aircraft in a specified location. A NWA employee will be responsible for retrieving the log sheets and questionnaire. Both forms should be sent to Dwight Bowling at NWA in Minneapolis, and finally to William Wanner at the FAA Technical Center.

The FAATC 'controller' will also fill out the questionnaire. The FAATC 'controller' may write any additional comments on the questionnaire.

Data Reduction

The call setup times for uplink and downlink conversations will be recorded. For this phase the call setup times will be measured within the satellite subnetwork, between the GES and the Comm Center, between the Comm Center and the FAATC, and for the end-to end link. Maximum, minimum, and mean/median call setup times for each leg and for the end-to-end link will be calculated. Also, the number of tries to successfully place a call (voice connection rate) will be analyzed. Finally, the results of the questionnaire will be evaluated.

Maximum, minimum, and mean/median voice intelligibility scores from the pilots and the controllers, according to the ICAO readability scale, will also be calculated.

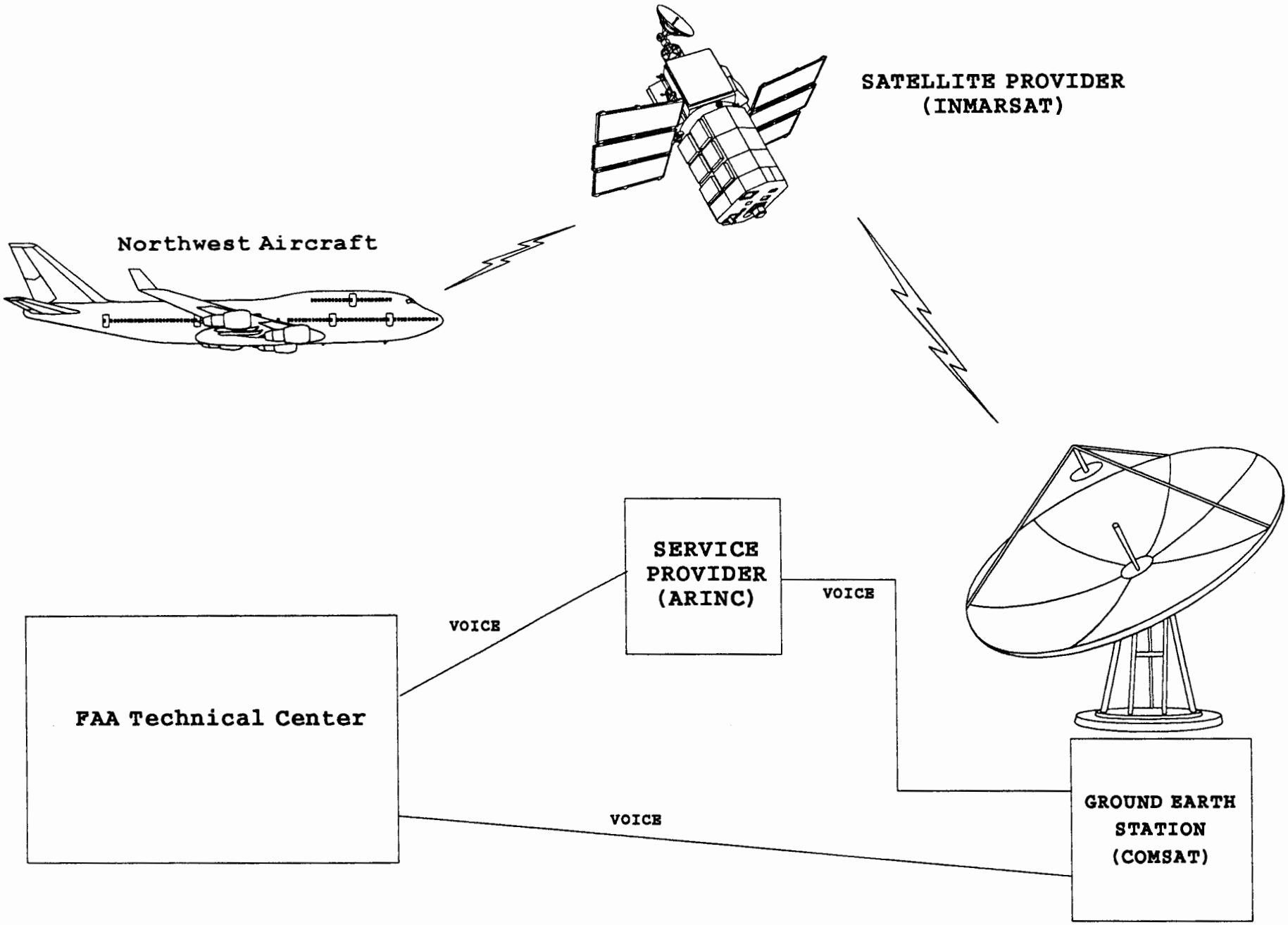

PHASE II TEST CONFIGURATION

Appendix C - Cockpit Interface Description

The cockpit interface for the satellite voice trials will be a Wulfburg handset. This handset is shown in Figure C-1. The placement of the handset and the configuration of the control panel is shown in Figure C-2. Also, the total equipage configuration is shown in figure C-3.

The indicator lamps, with a short description, located in the cockpit are:

1. FAIL - Equipment
2. NOT READY - Service unavailable
3. IN USE - Line in use
4. LAMP/CHIME/BELL - Incoming call

The following procedures are used to place a phone call:

1. Check that the FAIL, NOT READY, and IN USE lamps are not illuminated
2. Lift handset
3. Listen for continuous dialtone
4. Dial the access code (00), country code, city/area code, and the telephone number
5. Listen for voice message: "Please wait, connecting your call"

The users guide from Racal indicates that a delay of up to one minute may occur while the call is being connected. Also, if a call fails to connect, a voice message will indicate the reason.

To receive a call:

1. Wait for an indication of an incoming call (indicator LAMP, CHIME, or BELL)
2. Lift handset to receive call

The following features are also present with this system:

1. Redial last number
2. Dial a stored telephone number (up to 10 stored numbers)
3. Bar outgoing calls (restrict use to incoming calls only)
4. Clear the bar (to permit outgoing calls after they were barred)

Global Wulfsberg Systems

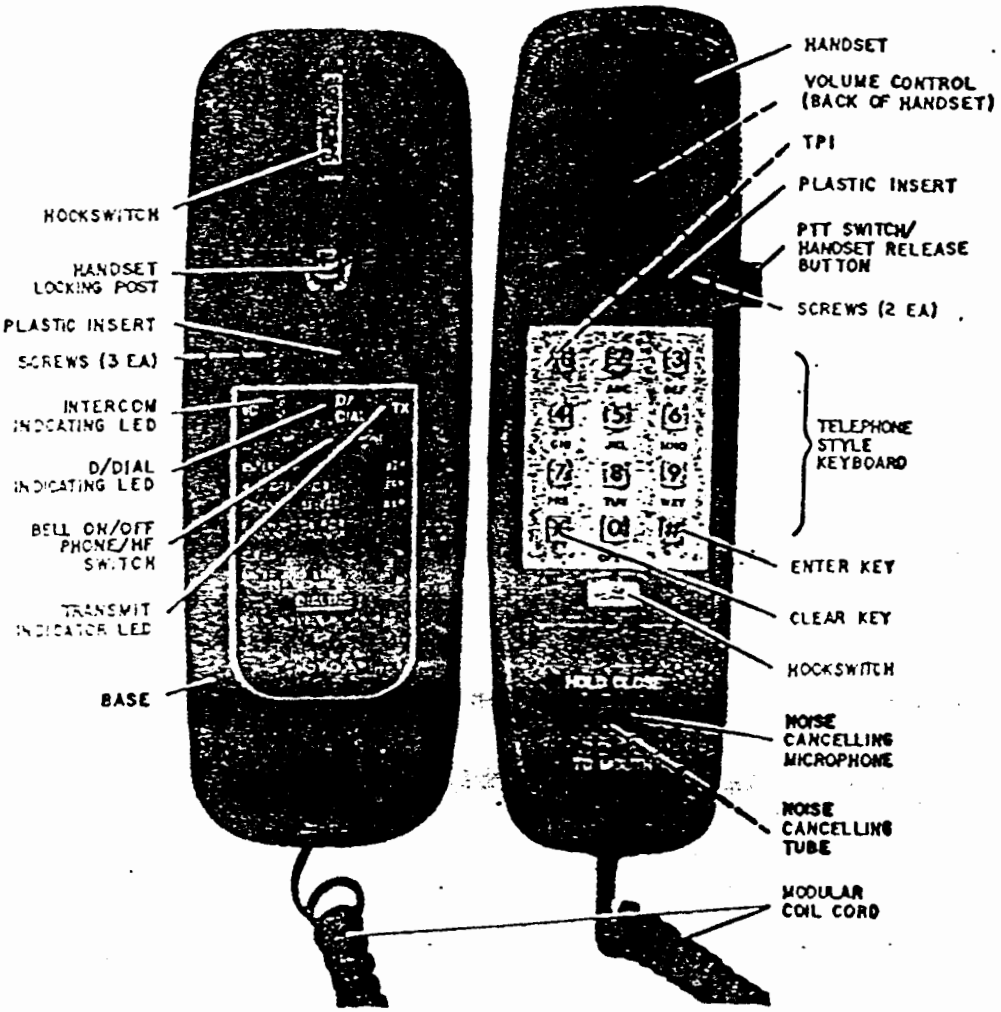

FIGURE C-1

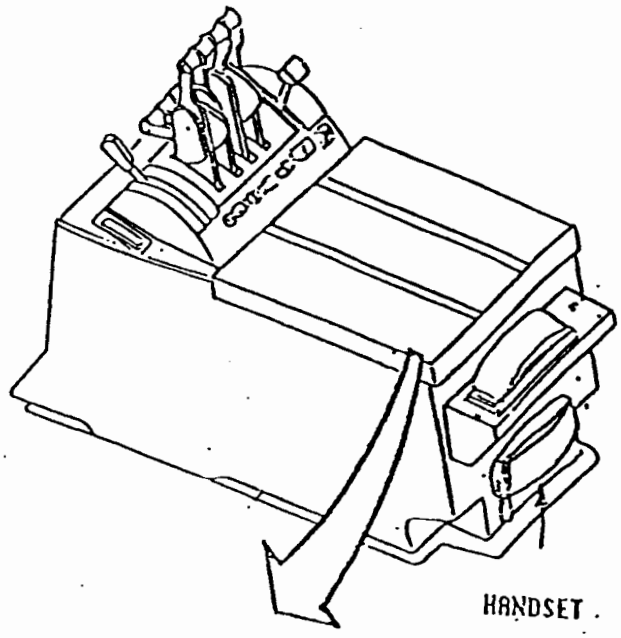

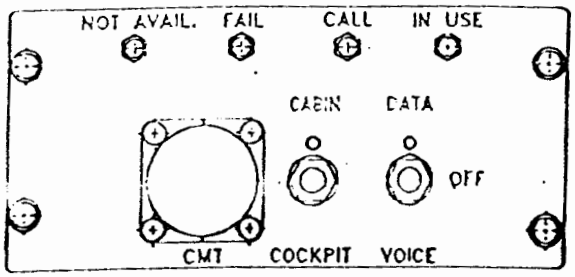

CONRTOL PANEL

FIGURE C-2

NWA SATFONE CONFIGURATION

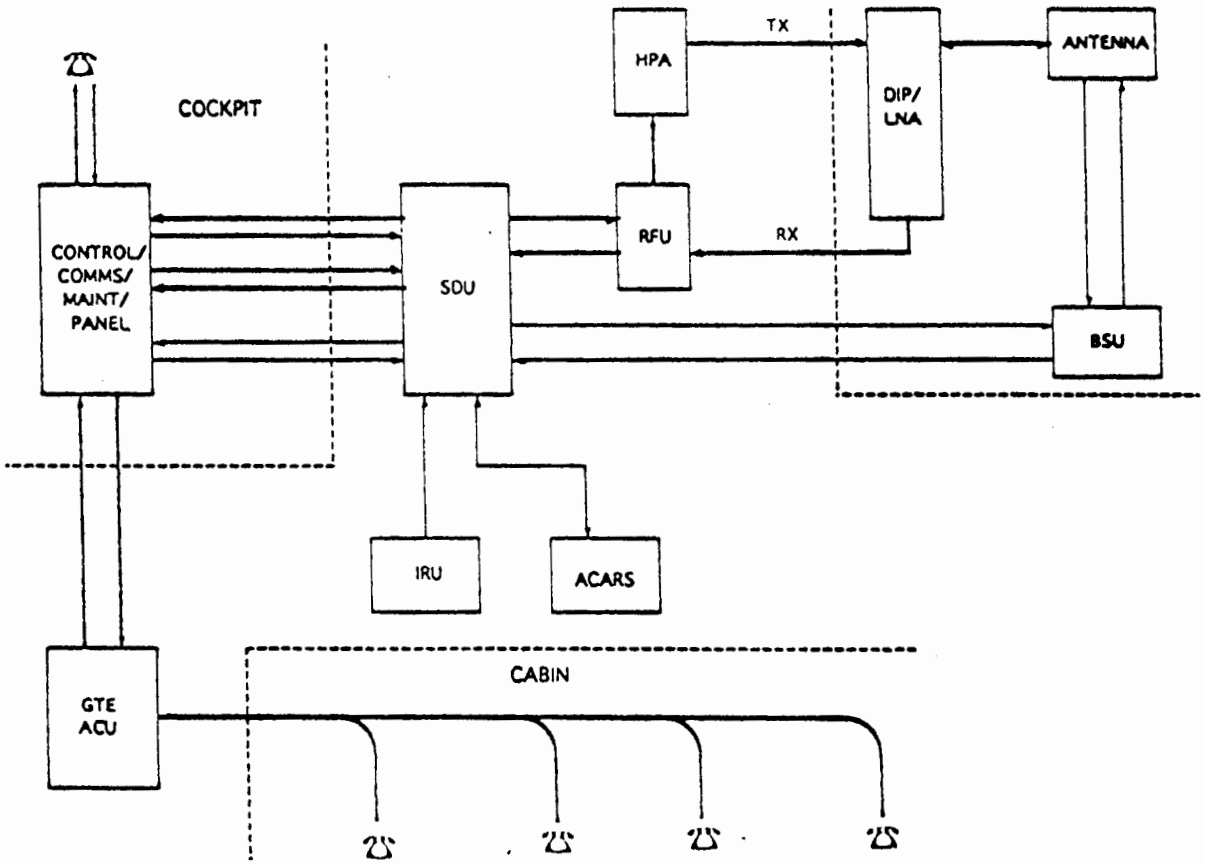

Figure C-3

Appendix D - Questionnaire

1. Overall, compared to HF radio communications, would you say that the satellite voice is (circle one)

a. much better than
b. slightly better than
c. about the same as
d. slightly worse than
e. much worse than

HF radio communications?

2. How acceptable is the end-to-end call setup delay?

a. completely acceptable
b. mostly acceptable
c. acceptable
d. marginally acceptable
e. unacceptable

3. Do you notice any voice transmission delay (voice delay between two people conversing) using satellite voice?

a. Yes b. No

4. If you answered 'Yes' in question 3, do you feel that the voice transmission delay of satellite voice is tolerable?

a. completely tolerable
b. mostly tolerable
c. tolerable
d. marginally tolerable
e. intolerable

Please comment:

5. Overall, how acceptable is satellite voice for ATC use?

a. completely acceptable
b. mostly acceptable
c. acceptable
d. marginally acceptable

e. unacceptable

6. How acceptable is satellite voice for emergency and non-routine situations?

a. completely acceptable
b. mostly acceptable
c. acceptable
d. marginally acceptable
e. unacceptable

Please comment briefly on the use of handsets, both positive and negative, for cockpit use. Take into account placing calls, receiving calls, and the impact of using a handset during flight.

Other Comments:

Appendix E- Voice Intelligibility Scores

The voice intelligibility scores are based on the ICAO readability scale. This scale measures both the signal strength and the readability of the voice being heard.

1. Signal strength

Rating	Description
5	Excellent
4	Good
3	Fair
2	Poor
1	Barely audible

2. Readability Scale

Rating	Description
5	Perfectly readable
4	Readable
3	Readable but with difficulty
2	Readable now and then
1	Unreadable

Appendix F - Log Sheets

Date _____
Tail # _____
Flight # _____

Pilot_____
Cockpit Obs_____

Please Return To:
Dwight Bowling
NWA Company Mail
ATTN: Satellite Voice Trials
Mail Stop: MSPC8913

Call #	Time (UTC)	ICAO Score Signal Strength	ICAO Score Readability	Call Setup Time (Secs.)	Position	Bank Angle	True Heading	Comments
1								
2								
3								
4								
5								
6								
7								
8								
9								
10								
11								
12								
13								
14								
15								
16								
17								
18								
19								
20								

NOTE: Information on the ICAO scores and call setup time is on the back of this log sheet.
(Cockpit Log Sheet) Additional Comments:

Pilot Instructions For Log Sheets

1. Fill out the log sheet for every call that is placed, and if the call is not connected, state this in the log sheet.

2. After completing a flight, place the completed log sheets and questionnaire in the aircraft log book.

3. Some of the parameters in the log sheet are defined below.

A. ICAO Scores for Signal Strength and Readability

The voice intelligibility scores are based on the ICAO readability scale. This scale measures both the signal strength and the readability of the voice being heard.

Signal strength

Rating	Description
5	Excellent
4	Good
3	Fair
2	Poor
1	Barely audible

Readability Scale

Rating	Description
5	Perfectly readable
4	Readable
3	Readable but with difficulty
2	Readable now and then
1	Unreadable

B. Call Setup Time

This is the time from when the last button is pressed on the handset to the time that an indication that the phone is ringing on the other end.

Radio Operator Name_____ Date_____

Call #	Time (UTC)	ICAO Score Signal Strength	ICAO Score Readability	Comments
1				
2				
3				
4				
5				
6				
7				
8				
9				
10				
11				
12				
13				
14				
15				
16				
17				
18				
19				
20				

(Comm Center Log Sheet) Additional Comments:

Controller Name_____ Date_____

Call #	Time (UTC)	Call Setup Time (Secs.)	ICAO Score Signal Strength	ICAO Score Intelligibility	Comments
1					
2					
3					
4					
5					
6					
7					
8					
9					
10					
11					
12					
13					
14					
15					
16					
17					
18					
19					
20					

(FAATC Log Sheet) Additional Comments: