COPY 2

ACD 34093/2

ACD34093/2

U. S. Department
of Transportation

Federal Aviation
Administration

AVAILABLE IN
ELECTRONIC FORMAT

FAA TECHNICAL CENTER

TRAFFIC MANAGEMENT ADVISOR (TMA)

FUNCTIONAL AND NON-INTERFERENCE

DEMONSTRATION PROCEDURES

(DENVER CONFIGURATION)

November 9, 1992

Engineering, Research, and Development Service
Research Directorate for Aviation Technology
FAA Technical Center
Atlantic City International Airport, NJ 08405

DOT/FAA
/CT-ACD
34093/2
c.2

FOREWORD

The development of these procedures would not have been possible without the help of participants in the FAA TATCA Program Office (ARD-40), NAS System Engineering Service (ASE-1), Advanced Systems and Facilities Division (ATR-300), NASP and Future Systems Branch (ATR-330), Office of Traffic System Management, Office of Civil Operations (ATM-100), FAA Technical Center ATC Technology Branch (ACD-340), NASA Ames Research Center, and CTA Incorporated. The following individuals were instrumental in the development of this demonstration procedures document:

FAA TATCA Program Office, ARD-40:
Chuck Friesenhahn
Craig Marina
Bill Bamberg
Janice Hooten
Mike Rymond
Joan Snowden

FAA Headquarters, NAS System Engineering Service, ASE-1:
Ron Morgan

FAA Headquarters, Advanced Systems and Facilities Division, ATR-300:
Pete Swears

FAA Headquarters, NASP and Future Systems Branch, ATR-330:
Joe Pitts
Charles Johnson

FAA Headquarters, Office of Traffic Management, Office of Civil Operations, ATM-100:
Bill Marx
Barbara Smith

FAA Technical Center, ATC Technology Branch, ACD-340:
Lee Paul
Don Roberts
Jim Thomas
Bud Timoteo
Phil Zinno

NASA Ames Research Center:
Chris Brinton
Tom Davis

CTA INCORPORATED:
Chris Ciolorito
Joe Pointkowski

It is my privilege to submit this demonstration procedures document to the program office for its use in the TATCA Program.

Richard D. Page, ACD-340
Senior Technical Program Manager
FAA Technical Center

TABLE OF CONTENTS

LIST OF ILLUSTRATIONS ii

LIST OF ACRONYMS iii

GLOSSARY iv

SUMMARY viii

1. INTRODUCTION 1
   1.1 BACKGROUND 1
   1.2 PURPOSE 2
   1.3 SCOPE 2
   1.4 DOCUMENT ORGANIZATION 3

2. REFERENCE DOCUMENTS 4

3. DEMONSTRATION PREPARATION 5
   3.1 SOFTWARE CONFIGURATION 5
   3.2 HARDWARE CONFIGURATION 7
   3.3 DEMONSTRATION DIRECTOR'S ROLE 10

4. CENTER HOST NON-INTERFERENCE DEMONSTRATION OVERVIEW 12

5. TMA FUNCTIONAL DEMONSTRATION OVERVIEW 13

APPENDIX A. CENTER HOST NON-INTERFERENCE DEMONSTRATION PROCEDURES A-1

APPENDIX B. TMA FUNCTIONAL DEMONSTRATION PROCEDURES B-1

APPENDIX C. TMA DEMONSTRATION REPORT FORM C-1

APPENDIX D. SYSTEM CONFIGURATIONS FOR TMA DEMONSTRATION . . . D-1

ATTACHMENT A. 24 HOUR PROCEDURES . . . . . Attachment A-1

LIST OF ILLUSTRATIONS

Figure 3.1-1 FAA Technical Center TMA Demonstration Laboratory Configuration . . . 6
Figure 3.1-2 TMA Demonstration Software Configuration 8
Figure 3.2-1 TMA Demonstration Hardware Configuration 9
Figure 3.2-2 HOST/TMA Interface 11

LIST OF ACRONYMS

AAS	Advanced Automation System
ARTCC	Air Route Traffic Control Center
ASP	Arrival Sequencing Program
ATC	Air Traffic Control
CM	Communications Manager
CPU	Central Processing Unit
CTAS	Center-TRACON Automation System
DA	Descent Advisor
EDP	Expedite Departure Path
ETA	Estimated Time of Arrival
FAA	Federal Aviation Administration
FAST	Final Approach Spacing Tool
GPO	General Purpose Output
IFR	Instrument Flight Rules
LAN	Local Area Network
NAS	National Airspace System
NASA	National Aeronautics and Space Administration
PAMRI	Peripheral Adapter Module Replacement Item
PTA	Planned Time of Arrival
PVD	Plan-View Display
STA	Scheduled Time of Arrival
TATCA	Terminal Air Traffic Control Automation
TM	Traffic Manager
TMA	Traffic Management Advisor
TMC	Traffic Management Coordinator
TMU	Traffic Management Unit
TRACON	Terminal Radar Approach Control
TTMA	TRACON Traffic Management Advisor

GLOSSARY

AIRPORT ACCEPTANCE RATE (AAR) - A dynamic input parameter specifying the number of arriving aircraft which an airport can accept from the Air Route Traffic Control Center (ARTCC) per hour. The AAR is used to calculate the desired interval between successive arrival aircraft.

BLOCKED TIME INTERVAL - An interval of time in which aircraft are not allowed to be scheduled. This could be used for a specified number of departures.

BLOCKED TIME SLOT - A time interval set aside as a place holder in the schedule for an aircraft not being tracked by the Center radar but expected to land at the given time. This may be designated as a heavy, large, or small aircraft, and the TMA logic will compute the required spacing for this slot based on the aircraft behind it in the landing schedule. This could be used for pop-ups or tower en route aircraft.

CENTER-TRACON AUTOMATION SYSTEM PROJECT (CTAS) - A project within the TATCA Program to evaluate and implement a set of automation tools within candidate Centers and TRACONs. The CTAS term is also used to refer to the collection of integrated software tools developed at National Aeronautics and Space Administration (NASA) Ames Research Center and used as a basis for the CTAS project.

DELAY TIME - The amount of time that the arrival must lose to cross the meter fix at the assigned meter fix time.

DESCENT ADVISOR (DA) - Software and user interface to provide the Center sector radar controllers with optional advisories that enable them to direct individual aircraft for merging and descent. The resultant flight profiles are computed to meet the TMA-generated schedules accurately with fuel efficient descent from cruise altitudes.

ESTIMATED TIME OF ARRIVAL (ETA) - This is the estimated time at which the aircraft will land or cross a selected waypoint, assuming that there will be no conflicts with other aircraft in the process. It is based on either (a) the aircraft's current position and velocity as measured by the tracking radar, the expected speed profile that the aircraft will follow to reach the waypoint, and the wind estimate used by the CTAS trajectory computations, or (b) the expected times as derived from the flight plans within the Center Host computer, which are used prior to when the aircraft can be tracked by the Center radar. For tracked aircraft, the ETAs are updated about twice per minute.

FEEDER FIX - The fix depicted on Instrument Approach Procedure Charts which establishes the starting point of the feeder route.

FEEDER ROUTE - A route depicted on instrument approach procedure charts to designate routes for aircraft to proceed from the en route structure to the initial approach fix.

FINAL APPROACH FIX - The fix from which the final approach Instrument Flight Rules (IFR) to an airport is executed and which identifies the beginning of the final approach segment. It is designated on the Government charts by the Maltese Cross symbol for non-precision approaches and the lighting bolt symbol for precision approaches; or when Air Traffic Control (ATC) directs a lower-than-published Glideslope/path Intercept Altitude, it is the resultant actual point of the glideslope/path intercept.

FIX - A geographical position determined by visual reference to the surface, by reference to one or more radio NAVAIDs, by celestial plotting, or by another navigational device.

FLIGHT PLAN - Information relating to the intended flight that is followed with a Flight Service Station or an ATC facility.

FREEZE HORIZON - The time at which aircraft are frozen in schedule. It is shown on the ETA time-line of the TMA as a short horizontal blue bar marking the end of the scheduling window. Aircraft with a fixed Scheduled Time of Arrival will be the catalyst for future CTAS-generated trajectories through the Center and TRACON airspace to runway threshold.

GATE BALANCING - Distributing arrival aircraft among several arrival routes to evenly level sector load. This is a CTAS function.

LOGICAL DISPLAY - A window on a physical display. Multiple logical displays can be viewed on one physical display.

METERING - A method of time-regulating arrival traffic flow into a TRACON area so as not to exceed a predetermined TRACON acceptance rate.

METERING FIX - A fix along an established route over which aircraft will be metered prior to entering TRACON airspace. Normally, this fix should be established at a distance from the airport which will facilitate a profile descent 10,000 feet above airport elevation or above.

PHYSICAL DISPLAY - A hardware device capable of displaying text or graphics.

REAL DATA - Live or recorded Center Host data consisting of tracking, flight plan, and metering data.

RUNWAY CONFIGURATION - The particular set of runways in use at an airport for departures and arrivals and the types of operations allowed at each.

RUSH ALERT - A mechanism provided by the TMA to allow the TMC to monitor a number of aircraft within a specified block of time against the current acceptance rate. The TMC will be notified when the current acceptance rate is exceeded.

SCHEDULE - In this plan, the term "schedule" does not refer to the traditional usage (i.e., the airlines' schedule). The CTAS definition of a schedule is (a) the specific order, or sequence, in which each aircraft shall cross either a certain waypoint or the landing threshold, and (b) the specific time at which they are to cross a waypoint or land.

SCHEDULED TIME OF ARRIVAL (STA) - This is the desired time that the aircraft should land or cross a selected waypoint. It is computed based on the interval of elapsed time to be spent in flying from the aircraft current position to landing or crossing the selected waypoint. The STA is generated automatically by the scheduling software, or it can be set manually by the traffic manager or the radar controller whose sector the aircraft is in.

SCHEDULING HORIZON - An interval specified by the TM. It determines when an aircraft is first added to the list of aircraft currently being scheduled, referred to as the scheduled list. An aircraft is added to this list when its time to landing based on its current ETA first penetrates (becomes less than the time of) the scheduling horizon. The top of the scheduling window is sometimes known as the scheduling horizon.

SCHEDULING WINDOW - An interval specified by the TM in which aircraft are actively sequenced and scheduled by the TMA scheduling software. It is shown only on the ETA time-line with a runway threshold reference and is marked by a vertical yellow line beside the time-line. The window remains in a fixed position on the TMA screen, a specified number of minutes above (before) the threshold reference at the bottom of the ETA time-line, as time passes.

TERMINAL AIR TRAFFIC CONTROL AUTOMATION PROGRAM (TATCA) - This is an Federal Aviation Administration (FAA) program consisting of several projects that will lead to (a) limited national deployment of selected ATC automation functions in the pre-Advanced Automation System (AAS) environment, followed by (b) eventual AAS national implementation.

TIME-LINE - A display format where aircraft data are placed on an axis corresponding to the arrival time of aircraft at the runway threshold, a metering fix, or final approach fix.

TRAFFIC MANAGEMENT ADVISOR (TMA) - Software, graphics, and user input devices to allow the traffic manager to control the scheduled flow of traffic within the TRACON area. Starting about 200 nmi. out from touchdown in the Center airspace and again at the TRACON boundary.

TRACON TRAFFIC MANAGEMENT ADVISOR (TTMA) - The automation system provided by TATCA to allow the TRACON radar controllers to monitor the traffic into the

TRACON area. The process starts within 15 to 20 minutes of the meter fix. This permits an automatic and continuous updated coordination of the traffic transition from Center to TRACON airspace.

SUMMARY

As a result of a January 28, 1991 meeting of FAA Associate Administrators, the Terminal Air Traffic Control Automation (TATCA) Program received permission to proceed with field test and development of selected TATCA functions. Subsequently, the Associate Administrator for Air Traffic designated Denver and Dallas TRACONs and their associated Centers as the field test and development sites.

The initial Traffic Management Advisor (TMA) was demonstrated to Air Traffic personnel at the FAA Technical Center, October, 1991. Following this demonstration, results were submitted to the Air Traffic Service and the TATCA Program Office defining TMAs readiness to begin field development and evaluation at Denver Center.

The Traffic Management Advisor (TMA) will be the first CTAS automation tool to be formally evaluated. This formal assessment at the Denver Center will be limited in scope, as the TMA will not be used operationally during the period. Instead, the capabilities of TMA will be displayed off-line to acquire relevant comments from the Traffic Management Coordinators (TMCs). The information acquired during the formal assessment will be used to develop the TMA's potential as an operational tool.

The TMA functions and non-interference aspect of the H/TMA interface will be demonstrated at the FAA Technical Center (FAATC) prior to the field test and development effort at the Denver and Fort Worth Centers. Once the FAATC demonstration has been accomplished, and Air Traffic Service provides the approval, activities will commence first at Denver, and later at Fort Worth Centers.

This document contains the detailed procedures to be used during the TMA demonstration at the FAA Technical Center. It is based on information contained in the TMA Demonstration Plan [1], which has been previously published by the FAA Technical Center.

1. INTRODUCTION

This document comprises the Federal Aviation Administration (FAA) Traffic Management Advisor (TMA) Functional and Non-Interference Demonstration Procedures. The TMA will be demonstrated at the FAA Technical Center prior to formal assessment at the Denver Center. TMA is an automation tool which is part of the Center-TRACON Automation System (CTAS) developed by NASA Ames Research Center. CTAS is an integral part of the FAA Terminal Air Traffic Control Automation (TATCA) Program.

1.1 BACKGROUND

The FAA initiated the TATCA Program in 1986 to provide solutions to the growth in air traffic and increased TRACON area delays. The goal of TATCA is to provide automation tools which will aid in the handling of larger volumes of departing and arrival aircraft in major TRACON areas. The program's objectives are to provide effective automation prior to the Advanced Automation System (AAS) and to develop plans to achieve increased automation for the AAS in the late 1990's. The FAA is in the process of evaluating an integrated set of automation tools, developed by the NASA Ames Research Center, known as CTAS.

CTAS was developed primarily to aid the Traffic Management Coordinator (TMC), and the Center and the Terminal Radar Approach Control (TRACON) controller to sequence and schedule arrival traffic at major center and TRACON areas. The automation tool set was developed to optimize traffic flow, increase fuel efficiency, reduce delays, and improve TMC and controller productivity. CTAS sequences, schedules, and generates clearance advisories to assist, not replace, the TMC and controller in making decisions.

CTAS comprises four primary automation components:

a. **the TMA** which gives the TMC at the Traffic Management Unit (TMU) automation tools to efficiently schedule and sequence arrival traffic;

b. **the Descent Advisor (DA)** which provides controllers recommended control actions to help aircraft meet the TMA schedule;

c. **the Final Approach Spacing Tool (FAST)** which assists TRACON controllers in sequencing and spacing aircraft on final approach so as to optimize runway throughput and reduce delays; and,

d. **the Expedite Departure Path (EDP)** tool which provides a method to merge satellite departures into the arrival stream at the primary airport.

1.2 PURPOSE

This document describes procedures that will be used to demonstrate limited TMA functions at the FAA Technical Center to show that the automation tool is suitable for formal assessment at the Denver Center. The demonstration will also show that there is no operational impact on the Denver Center Host computer performance as a result of the TMA interface. Real (live) radar tracking and flight plan data from the Denver Center Host will be used during the demonstration.

In order to begin the formal development and evaluation efforts at Denver and then Fort Worth Centers, an initial baseline system of TMA hardware and software will be demonstrated at the FAATC.

Once the demonstration of the enhanced TMA system design has been completed successfully at the FAA Technical Center, a formal assessment will be conducted at the Denver Center. Once the Denver formal assessment is completed, and approved recommendations, if any, are incorporated into the TMA system, then additional formal development and evaluation efforts will be undertaken.

1.3 SCOPE

TMA functions, which do not require clearances to active arrival aircraft, will be shown in a non-operational environment. Non-interference between the TMA and the Denver Center Host computer will be shown. During the FAATC demonstration, the TMA will receive inputs from the Denver Center Host interface. Since this is a passive one-way interface, no data will be transmitted from the TMA to the Denver Center Host computer.

FAA Technical Center personnel in coordination with Air Traffic personnel have developed criteria for the TMA Demonstration. The Demonstration will be considered successful if all the cases contained in Appendix A (Center Host Non-Interference) and Appendix B (TMA Functionality) are completed successfully (pass or pass with comments).

At the completion of the demonstration, a decision as to whether or not to proceed with the formal assessment at the Denver Center will be made by the FAA TATCA Program Manager (ARD-40) and Associate Program Manager (ATR-300) representatives. The Denver formal

assessment will commence at the conclusion of a successful demonstration at the FAA Technical Center.

A summation of the FAA Technical Center's demonstration, including events and recommendations, will subsequently be prepared and validated by representatives of the FAA TATCA Program Manager, ARD-40, and Associate Program Manager, ATR-300.

1.4 DOCUMENT ORGANIZATION

This document is organized into five sections, four appendices, and one attachment. They are presented as follows:

a. section 1 provides background information on the TMA demonstration;

b. section 2 provides a list of all reference materials used in the creation of the demonstration procedures;

c. section 3 addresses the preparations necessary for demonstrating the TMA;

d. section 4 presents an overview of the non-interference demonstration;

e. section 5 presents an overview of the TMA functional demonstration;

f. appendix A contains the non-interference demonstration procedures;

g. appendix B contains the TMA functional demonstration procedures;

h. appendix C contains an example of a Demonstration Report Form; and,

i. appendix D contains a the system configurations to be used for the TMA demonstration.

j. attachment A contains continuous operations procedures to be followed by the test participant and Denver Center personnel.

2. REFERENCE DOCUMENTS

The following documents were used in developing the demonstration procedures:

1. FAA Technical Center Traffic Management Advisor Functional and Non-Interference Demonstration Plan (Denver Configuration), November 9, 1992, FAA Technical Center.

2. Traffic Management Advisor (TMA) Reference Manual, ATC Field Systems Office, October 5, 1992, NASA Ames Research Center.

3. Traffic Management Advisor (TMA) Reference Manual, Supervisor's Supplement, ATC Field Systems Office, October 5, 1992, NASA Ames Research Center.

4. Working Paper, Functional Description, and Plan for Evaluation of the Traffic Management Advisor, July 1, 1991, J.L. Garcia, F. Neuman, L. Tobias.

A procedure is defined for each subsection of Sections 4 and 5 of the TMA Demonstration Plan [1].

3. DEMONSTRATION PREPARATION

This section describes the software and hardware configuration required to demonstrate the TMA at the FAA Technical Center. The demonstration emphasis is to exhibit TMA functionality from an Air Traffic perspective. The TMA and associated software will reside on a network of SUN Microsystems computers located at the FAA Technical Center. This is the same hardware configuration that will be used for field test and development, with the exception of a modem interface, which will be replaced by a serial connection. This hardware and software comprises the TMA Demonstration System. A passive one-way interface from the Denver Host computer to the TMA Demonstration System will provide live radar data.

3.1 SOFTWARE CONFIGURATION

The TMA demonstration will use suitably configured Denver Host and CTAS software. The Host software will consist of the operational Denver Host software configuration, which has been modified to include the software patch necessary to send data to the CTAS. This patch was developed for the purpose of sending live data to NASA Ames Research Center for CTAS software testing, and is currently being used at Denver Center and the FAA Technical Center, with no Host impact. It will be used to send live data to the FAA Technical Center for the TMA demonstration.

The demonstration software at the FAA Technical Center will consist of the TMA and a portion of the DA. TMA software release (ctas_v1.3.1t) will be used during this demonstration. The primary TMA components, in addition to the standard TMA scheduling software, are:

a. the Communications Manager (CM);
b. the Radar Daemon;
c. the Weather Daemon; and,
d. the Statistics Collection software.

Please note: For demonstration purposes the weather profile information will be shown on the Plan View Display (PVD).

Figure 3.1-1 depicts the TATCA Laboratory equipment layout for the TMA Functional and Non-Interference demonstration.

The TMA workstation software controls three logical displays (windows):

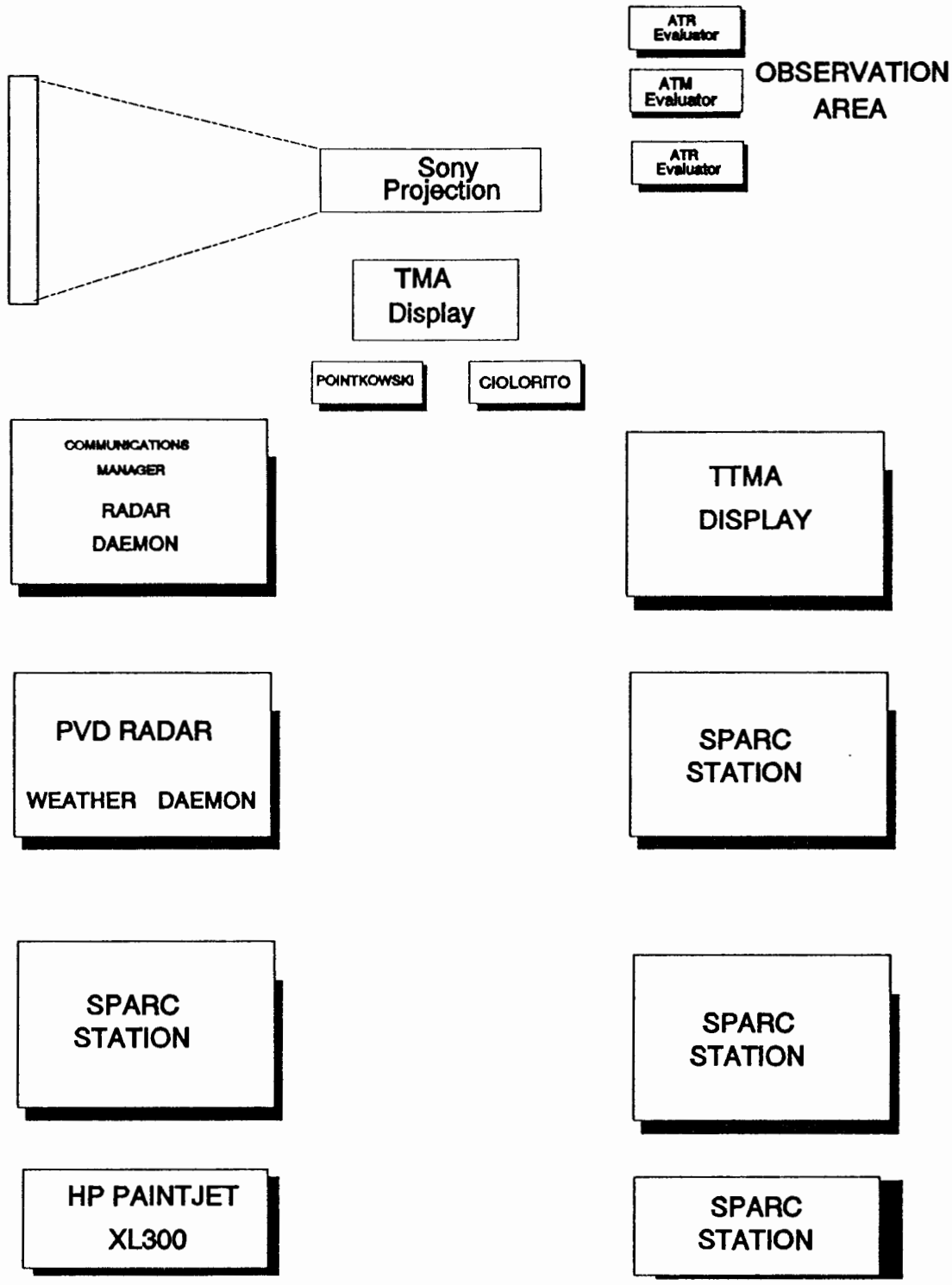

Figure 3.1-1 FAA Technical Center TMA Demonstration Laboratory

a. the Time-line display which allows the TMC or Traffic Manager to visually sequence and schedule arrival aircraft in a mixed graphic and alphanumeric format;

b. the Situation display, a small PVD-like display which allows the TMC to monitor center arrival traffic; and,

c. the Traffic Load Graph display which allows the TMC to monitor information about the number of aircraft in a specified block of time.

The DA software is comprised of three major components:

a. the Trajectory Synthesizer Algorithms; and,
b. the Descent Advisory Generation.

Only the DA Trajectory Synthesizer Algorithm component will be used during the demonstration. The other components will either be turned off or their outputs ignored. The Trajectory Synthesizer Algorithm component is necessary to run the TMA, as it processes data and generates estimated time of arrivals (ETAs) which are used by the TMA. ***The TMA will not run without this DA component.*** Figure 3.1-2 depicts the interrelationships between the TMA and the DA.

3.2 HARDWARE CONFIGURATION

The hardware to be used to demonstrate the TMA at the FAA Technical Center is as follows:

a. SUN SPARCStations with color monitors which consists of:

1. one Traffic Management Advisor Display workstation, a SONY Projection device may be used to project display presentation onto a large screen;
2. one PVD workstation (not a demonstratable component);
3. one TRACON Traffic Management Advisor Display workstation; and,
4. one Communications Manager workstation (not a demonstrable component).

b. two Paradyne Model DL424 modems;
c. one Ethernet Local Area Network (LAN); and,
d. SONY Projection device.

The configuration is depicted in Figure 3.2-1. The PVD will be used to monitor live traffic in the Denver Center airspace.

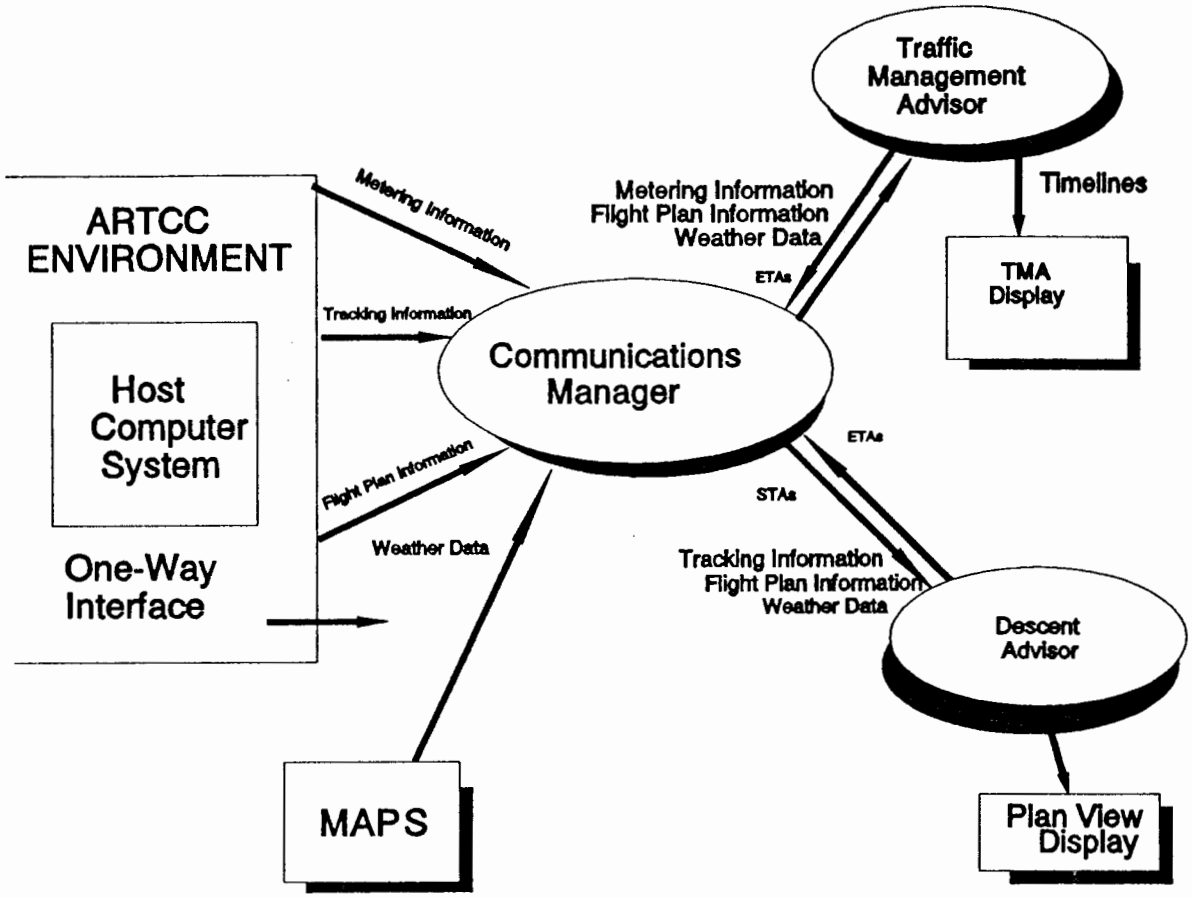

Figure 3.1-2 TMA Demonstration Software Configuration

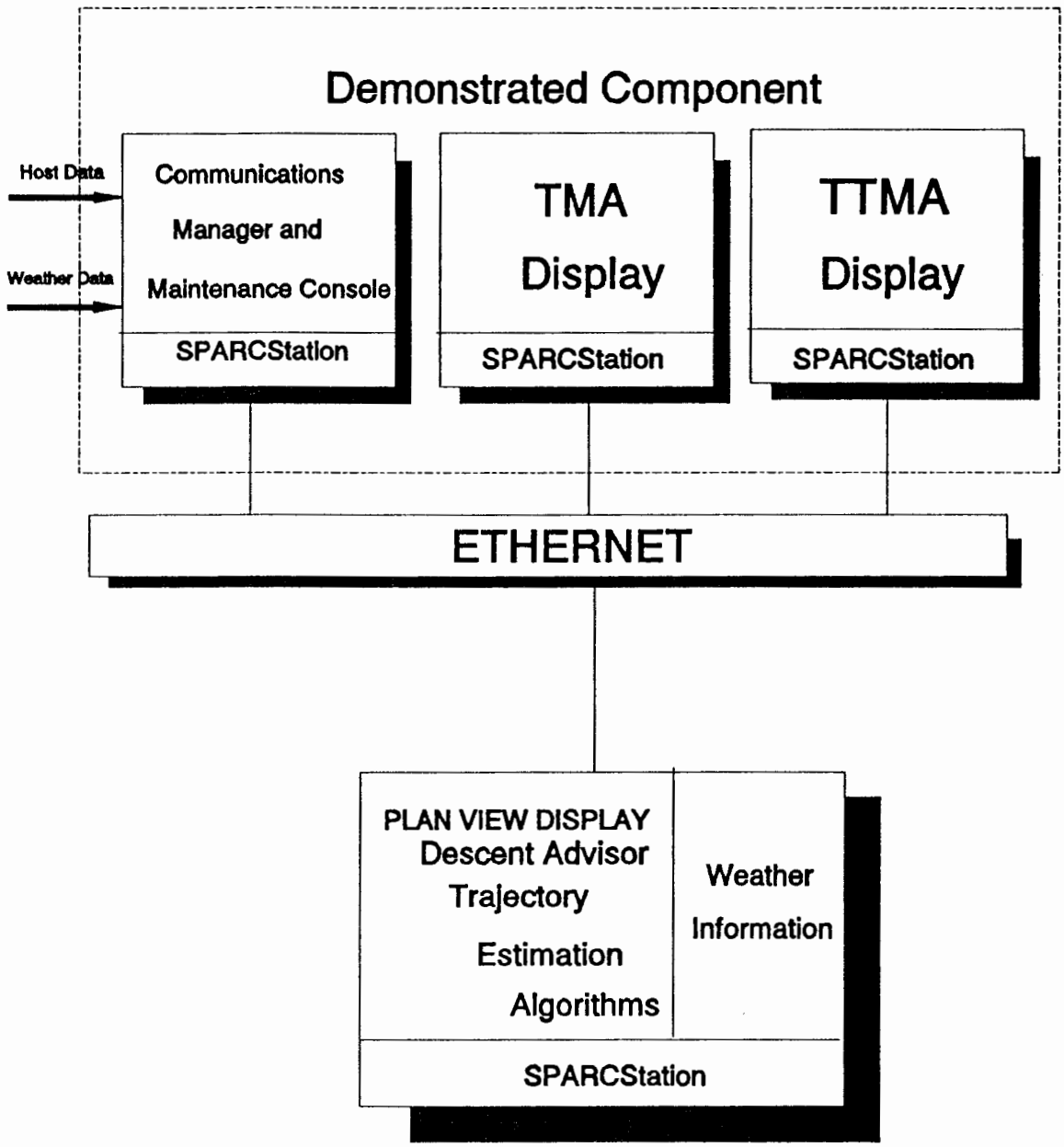

Figure 3.2-1 TMA Demonstration Hardware Configuration

The operational Denver Host hardware configuration will be employed. A Peripheral Adapter Module Replacement Item (PAMRI) General Purpose Output (GPO) port will be configured through adaptation to provide the physical interface to the TMA Demonstration System at the FAA Technical Center TATCA Laboratory. Figure 3.2-2 depicts the Denver Host and TMA interface. This configuration is currently being used at the Denver Air Route Traffic Control Center (ARTCC) on a daily basis. No adverse impact on the Denver Host computer system has been observed.

The following interface will be employed during the demonstration:

Denver Center Host computer interface, which will provide flight plan, track, and metering data to the FAA Technical Center TMA Demonstration system.

The Denver Center Host interface is a passive one-way link in that data is only sent from the Host to the TMA. Reference [1] contains interface information.

3.3 DEMONSTRATION DIRECTOR'S ROLE

The Demonstration Director is a member of the FAA Technical Center and will oversee all aspects of the TMA Demonstration including preparation of the final report. The Demonstration Director responsibilities include the following:

a. Inviting the appropriate personnel;

b. Ensuring that the hardware and software are properly configured;

c. Supplying the personnel resources necessary to run the TMA Demonstration, including a Demonstration operator who will follow the TMA Procedures, and a Demonstration engineer who will monitor system hardware and software during the demonstration;

d. Coordinating with Air Traffic and the TATCA Program office; and

e. Conducting the demonstration.

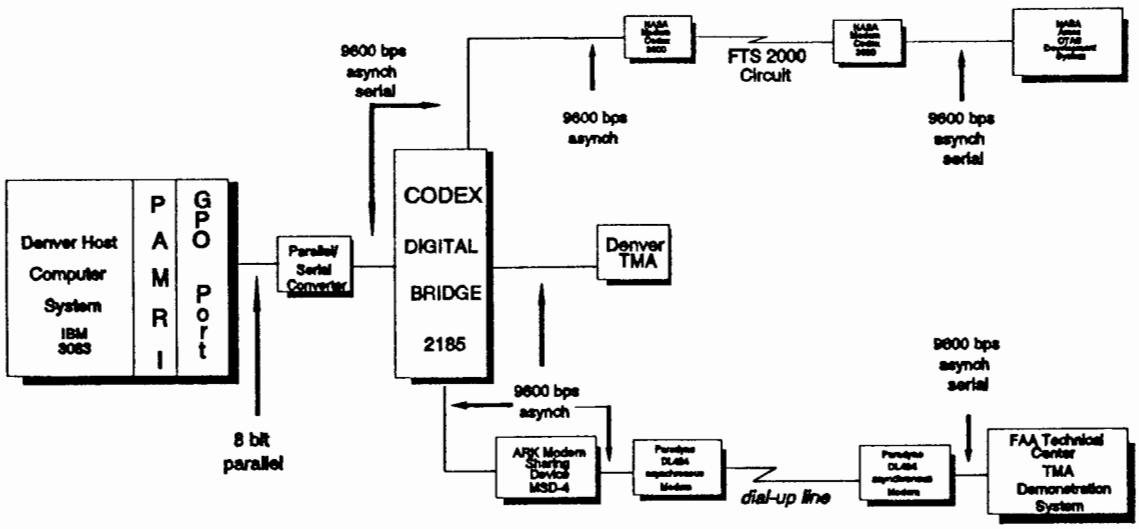

Figure 3.2-2 Host/TMA Interface

4. CENTER HOST NON-INTERFERENCE DEMONSTRATION OVERVIEW

One of the principle objectives of the FAA Technical Center TMA Demonstration is to show that there is no adverse impact on the Denver Center Host computer due to the TMA interface or TMA operation. The FAA Technical Center TMA system uses an existing interface. Denver Center Host performance and failure independence will be demonstrated to show that this objective has been met. The Denver Center Host non-interference demonstration procedures are contained in Appendix A.

Performance

The purpose of this demonstration is to show that there is no adverse impact upon Center Host computer performance as a result of the TMA interface. The Host performance impact can be quantitatively assessed using available Host software tools that measure loading. Host Central Processing Unit (CPU) loading will be measured when the TMA is both operational and non-operational. These measurements will be taken during the same traffic period. (The traffic densities when the two CPU loading measurements are taken should be similar so that the measurements can be compared). The TMA impact can then be estimated by examining the two Host loading measurements. Expected results will indicate no operational impact on the Host due to TMA operation.

Failure Independence

The purpose of this demonstration is to show that any problems experienced by the TMA will not affect a Host computer system. Host failure independence will be demonstrated by disconnecting and re-connecting an active TMA demonstration system to the Host Computer System. This may cause a TMA failure; however, this action will be shown to have no adverse impact on the Center Host computer system. Since the TMA is being demonstrated, and not being used operationally, TMA failure is acceptable during the demonstration.

Continuous Operations

The TMA software will be run for a continuous 24 hour period. This will demonstrate that the TMA will function at all levels of operational activity normally encountered at Denver Center. Arrangements will be made with the Denver Center TMU to coordinate operational configuration and runway changes as they occur at Denver Center so that the TMA Demonstration System at the FAA Technical Center reflects the actual operational configuration being employed. Traffic flow configurations will be validated every four hours to verify that the TMA Demonstration System conforms to the operational environment.

5. TMA FUNCTIONAL DEMONSTRATION OVERVIEW

Time-lines, operational configuration, and auxiliary displays are the major TMA functions that will be demonstrated at the FAA Technical Center. Denver Center live radar data will be used for demonstrating TMA functional capabilities. The TMA functional demonstration procedures are contained in Appendix B.

Time-lines

The TMA presents metering data in a graphical time-line format. The time-line may show any combination of planned time of arrivals (PTAs), the current ETAs, and the STAs as computed by the TMA scheduler for a given sequence of aircraft. The time-line extends upward with increasing future time or distance.

The time-line demonstration procedures will show that the scheduled landing sequence is displayed in time-line format. Also shown is the ability to automatically and manually schedule aircraft based on a pre-determined scheduling algorithm and air traffic conditions.

Operational Configuration

The TMA functions associated with airspace and/or runway configuration changes will be demonstrated. These functions include changing the airport acceptance rate, blocking time intervals, gate balancing, and airspace configurations for changing traffic flows and sector combinations.

Auxiliary Logical Displays

TMA capabilities have been developed to display traffic situation and traffic load graph information. The traffic situation display gives the TMC the capability of monitoring the Denver Center traffic. The traffic load graph display gives the TMC the capability to monitor predicted workload at the Denver Center in a specified block of time. The workloads are based on ETAs, STAs, (Arrival Sequencing Program (ASP) times, average delays, flow rates, or aircraft types.

APPENDIX A. CENTER HOST NON-INTERFERENCE DEMONSTRATION PROCEDURES

Case Name: Performance

Case No.: 4-1 **Cross Reference:** 4.1

Purpose: Demonstrate that there is no adverse impact upon Center Host performance as a result of the TMA interface.

Assumptions/Constraints: Assumes that the traffic density does not change while this procedure is being executed.

Procedures:

1. Contact the Center Host system engineer and have the NASA Ames patch turned off. Wait 5 minutes.

2. Contact the Center Host system engineer and request CPU utilization statistics (a National Airspace System (NAS) CPU message).

3. Note the CPU utilization statistics on the observer form.

4. After receiving the statistics verbally, have the Center Host begin sending data to the TMA by turning on the NASA Ames patch.

5. Wait 10 minutes.

6. Request the CPU utilization statistics from the system engineer while the TMA is receiving data from the Host computer system.

7. Note the CPU utilization statistics on the observer form.

8. Compare before and after CPU utilization measurements and calculate difference.

Expected Results: A very small jump in CPU utilization (1 - 2% at most) may occur.

Remarks: (1) The Denver Center Host computer will be used for this performance impact demonstration. (2) TMA software has been previously shown to have no adverse impact on the Denver Center Host computer. This was shown when the interface to NASA Ames was implemented.

Case Name: Failure Independence (a) RS232-C Cable Disconnect

Case No.: 4-2 **Cross Reference:** 4.2

Purpose: Demonstrate that a TMA system failure, when connected remotely, has no affect on the Center Host computer system.

Assumptions/Constraints: Assumes that the Center Host computer system is operational and is sending data to the FAATC TMA system.

Procedures:

1. Contact the Center Host system engineer. Request the Center Host computer system status (the system is either operational or non-operational) and note the status on the observer form.

2. While the TMA is receiving data from the Center Host, disconnect the TMA system to simulate a TMA system failure. (The TMA will be disconnected by unplugging the RS-232C cable that connects the modem to the SUN workstation receiving the Host data). Wait 2 minutes.

3. Request Center Host computer system status again from the system engineer and note the status on the observer form.

4. Re-connect the RS-232C cable and re-establish the link with Denver Center Host.

Expected Results: The Center Host status should remain unchanged (i.e., the Host computer system should remain operational) when the TMA system is disconnected. No switch-overs, startups, or restarts should occur.

Remarks: This case refers specifically to a remote (telecommunications) interface between the Host and TMA.

Case Name: Failure Independence (b) Phone Line Disconnect

Case No.: 4-3 **Cross Reference:** 4.2

Purpose: Demonstrate that a TMA system failure, when connected remotely, has no affect on the Center Host computer system.

Assumptions/Constraints: Assumes that the Center Host computer system is operational and is sending data to the FAATC TMA system.

Procedures:

1. Contact the Center Host system engineer. Request the Center Host computer system status (the system is either operational or non-operational) and note the status on the observer form.

2. While the TMA is receiving data from the Center Host, disconnect the TMA system to simulate a TMA system failure. (The TMA will be disconnected by unplugging the phone line connected to the modem receiving Denver Center Host data). Wait 2 minutes.

3. Request Center Host computer system status again from the system engineer and note the status on the observer form.

4. Re-connect the phone line and re-establish the link with Denver Center Host.

Expected Results: The Center Host status should remain unchanged (i.e., the Host computer system should remain operational) when the TMA system is disconnected. No switch-overs, startups, or restarts should occur.

Remarks: This case refers specifically to a remote (telecommunications) interface between the Host and TMA.

Case Name: Failure Independence (c) TM Software Failure

Case No.: 4-4 **Cross Reference:** 4.2

Purpose: Demonstrate that a TMA system failure, when connected remotely, has no affect on the Center Host computer system.

Assumptions/Constraints: Assumes that the Center Host computer system is operational and is sending data to the FAATC TMA system.

Procedures:

1. Contact the Center Host system engineer. Request the Center Host computer system status (the system is either operational or non-operational) and note the status on the observer form.

2. While the TMA is receiving data from the Center Host, abort the TM software program to simulate a TMA system failure. (The TM is aborted by pushing the stop key and following the instructions in the dialog box). Wait 2 minutes.

3. Request Center Host computer system status again from the system engineer and note the status on the observer form.

4. Restart the TM and use Option C time-line configuration file.

Expected Results: The Center Host status should remain unchanged (i.e., the Host computer system should remain operational) when the TM program is aborted. No switch-overs, startups, or restarts should occur.

Remarks: This case refers specifically to a remote (telecommunications) interface between the Host and TMA.

Case Name: Failure Independence (d) CM Software Failure

Case No.: 4-5 **Cross Reference:** 4.2

Purpose: Demonstrate that a TMA system failure, when connected remotely, has no affect on the Center Host computer system.

Assumptions/Constraints: Assumes that the Center Host computer system is operational and is sending data to the FAATC TMA system.

Procedures:

1. Contact the Center Host system engineer. Request the Center Host computer system status (the system is either operational or non-operational) and note the status on the observer form.

2. While the TMA is receiving data from the Center Host, abort the CM software program to simulate a TMA system failure. (The CM is aborted by clicking the left mouse button on the quit button in the CM panel, then confirming the quit action). Wait 2 minutes.

3. Request Center Host computer system status again from the system engineer and note the status on the observer form.

4. Restart the CM, TM, and the PVD programs (all CTAS programs except the Radar Daemon).

Expected Results: The Center Host status should remain unchanged (i.e., the Host computer system should remain operational) when the CM program is aborted. No switch-overs, startups, or restarts should occur.

Remarks: This case refers specifically to a remote (telecommunications) interface between the Host and TMA.

Case Name: Failure Independence (e) Radar Daemon Software Failure

Case No.: 4-6 **Cross Reference:** 4.2

Purpose: Demonstrate that a TMA system failure, when connected remotely, has no affect on the Center Host computer system.

Assumptions/Constraints: Assumes that the Center Host computer system is operational and is sending data to the FAATC TMA system.

Procedures:

1. Contact the Center Host system engineer. Request the Center Host computer system status (the system is either operational or non-operational) and note the status on the observer form.

2. While the TMA is receiving data from the Center Host, abort the radar daemon software program to simulate a TMA system failure. The radar daemon is aborted as follows:

   a. In a shell window (i.e., command line window) enter *ps -aux | grep radar* to get the radar daemon process ID number, denoted *pid*.

   b. In the same window, enter *kill -9 pid*.

3. Wait 2 minutes.

4. Request Center Host computer system status again from the system engineer and note the status on the observer form.

5. Restart the Radar Daemon.

Expected Results: The Center Host status should remain unchanged (i.e., the Host computer system should remain operational) when the TM program is aborted. No switch-overs, startups, or restarts should occur.

Remarks: This case refers specifically to a remote (telecommunications) interface between the Host and TMA. The radar daemon software accepts Host data from the serial port and transfers it to the Communications Manager program.

Case Name: TMA Continuous Operations

Case No.: 4-7 **Cross Reference:** 4.3

Purpose: Demonstrate a continuous TMA operational capability.

Assumptions/Constraints: Assumes that the Center Host computer system is operational and is sending data to the FAATC TMA system. This demonstration will be performed over a 24 hour period. ACD-340 will designate 3 observers to monitor the system during the 24-hour period (3 eight hour shifts). Each observer must complete a copy of this form.

Procedures: 1) - OPERATIONAL RUNWAY(S) AT DENVER:
During the first, fourth, and eighth (final) hour of each eight-hour shift, the ACD-340 designated observer will enter the following information:

SHIFT:_____
HOUR:_____ RUNWAY(S) IN USE:_____
HOUR:_____ RUNWAY(S) IN USE:_____
HOUR:_____ RUNWAY(S) IN USE:_____

2) - DEMONSTRATION FUNCTIONS:

The following functions will be completed and recorded during each 8-hour shift by the ACD-340 designated observer:

a)- START a NAPRS report at the beginning of each 8 hour shift and print a NAPRS report at the end of each shift.
b)- Reschedule 1 or more aircraft.
c)- Change runway configuration.
d)- Block 1 arrival runway.
e)- Change time-line configuration (Appendix D: Option A, B, C, or D).
f)- Change airport acceptance rate.
g)- Block a time interval on a time-line.
h)- Print a traffic count.
i)- Build a Load Graph Display.
j)- Change a proposed departure on the departure time-line. (Appendix D: Option D).
k)- Display a Rush Alert on a time-line.
l)- Display the TMA PVD window.

Expected Results: The system should respond to the ACD-340 observer input actions. The system should not abort during the 24 hour period.

Remarks: I certify that the above items were accomplished during my assigned watch:
Observer:_____ Date:_____

APPENDIX B. TMA FUNCTIONAL DEMONSTRATION PROCEDURES

Case Name: Configuration Set-Up

Case No.: 5-1 **Cross Reference:** 5.1.1

Purpose: Demonstrate how the time-line configuration can be modified.

Assumptions/Constraints: The default TMA time-line configuration will be used. Option A will be used for cases 5-2 through 5-9.

Procedures:

See Remarks.

Expected Results:

Remarks: Time-line configuration functions consist of demonstrating several sub-functions. Detailed demonstration procedures for each sub-function are contained in cases 5-2 through 5-6.

Case Name: Time-Line Appearance: (a) Switch ETA and STA

Case No.: 5-2 **Cross Reference:** 5.1.1.1

Purpose: Demonstrate time-line manipulation by switching the ETA and STA sides.

Assumptions/Constraints: Option A default TMA time-line configuration will be used.

Procedures:

1. Depress Shift-F9 to display the Time-line Options Panel.
2. Scroll down by positioning the cursor on the left vertical slider and left-click until the Host section is located.
3. Change the left side of time-line 1 by left-clicking on the ETA button.
4. Change the right side of time-line 1 by left-clicking on the "Schedule" button.
5. Observe that the actual (ETA) and scheduled (STA) sides of the time-line are interchanged.
6. Scroll up by positioning on the left vertical slider bar and right-click until the Time-line file is located at the top.
7. Left-click on LOAD to restore the original time-line display file.
8. Depress Shift-F9 and observe the original time-line is displayed.

Expected Results: The aircraft ETA tags will appear on the right, and the aircraft STA tags will appear on the left.

Remarks:

Case Name: Time-Line Appearance: (b) Extent

Case No.: 5-3 **Cross Reference:** 5.1.1.1

Purpose: Demonstrate time-line manipulation by changing the extent (i.e. the length of the time-line).

Assumptions/Constraints: Option A default TMA time-line configuration will be used.

Procedures:

1. Depress Shift-F9 to display the Time-line Options Panel.

2. Scroll down by left-clicking on the left vertical slider until the Length section is located.

3. Scroll to the right by left-clicking on the bottom horizontal slider until the Length of time-line 5 is located.

4. Left-click within the Length slider bar of time-line 5 until 30 minutes is selected.

5. Depress Shift-F9 to remove Time-line Options Panel.

6. Observe the change in the length of time-line 5.

7. Depress Shift-F9 and scroll to the left by right-clicking on the bottom horizontal slider.

8. Scroll to the top of the Time-line Options Panel by right-clicking on left vertical slider until the Time-line file is located.

9. Left-click on LOAD to restore the original time-line display file.

10. Depress Shift-F9 and observe the original time-line is displayed.

Expected Results: The time interval displayed will correspond to the selected interval.

Remarks:

Case Name: Time-Line Appearance: (c) Termination Time Gap

Case No.: 5-4 **Cross Reference:** 5.1.1.1

Purpose: Demonstrate time-line manipulation by adjusting the time-line termination time gap at the bottom of the time-line.

Assumptions/Constraints: Option A default TMA time-line configuration will be used.

Procedures:

1. Depress Shift-F9 to display the Time-line Options Panel.
2. Scroll up by left-clicking on the bottom horizontal slider until the Gap of time-line 6 is located.
3. Left-click within the Gap slider bar of time-line 6 until 25 minutes is selected.
4. Depress Shift-F9 to remove Time-line Options Panel.
5. Observe the change gap of time-line 6.
6. Depress Shift-F9 and scroll to the left by right-clicking on the bottom horizontal slider.
7. Left-click on LOAD to restore the original time-line display file.
8. Depress Shift-F9 and observe the original time-line is displayed.

Expected Results: The time-line termination time gap will be pushed back 25 minutes in comparison with the other time-lines. A double solid line will be displayed at the bottom of the time-line indicating the duration of the gap is 25 minutes.

Remarks:

Case Name: Time-Line Appearance: (d) Change Font Size

Case No.: 5-5 **Cross Reference:** 5.1.1.1

Purpose: Demonstrate time-line manipulation by adjusting the aircraft font size on a given time-line.

Assumptions/Constraints: Option A default TMA time-line configuration will be used.

Procedures:

1. Depress Shift-F9 to display the Time-line Options Panel.
2. Locate Font section of panel and left-click Medium within Time-line 2.
3. Depress Shift-F9 to remove Time-line Options Panel.
4. Observe the change in font size on Time-line 2.
5. Depress Shift-F9.
6. Left-click on LOAD to load the original time-line display.
7. Depress Shift-F9 and observe the original time-line is displayed.

Expected Results: The time-line Aircraft Id font is changed.

Remarks: Useful during heavy traffic situations.

Case Name: Time-Line Appearance: (e) Distance

Case No.: 5-6 **Cross Reference:** 5.1.1.1

Purpose: Demonstrate time-line manipulation by showing distance instead of time.

Assumptions/Constraints: Option A default TMA time-line configuration will be used.

Procedures:

1. Depress Shift-F9 to display the Time-line Options Panel.
2. Locate Type section of panel and left-click Distance on time-line 1.
3. Depress Shift-F9 to remove Time-line Options Panel.
4. Observe the change in time-line 1.
5. Depress Shift-F9.
6. Left-click on LOAD to load the original time-line display file.
7. Depress Shift-F9 and observe the original time-line is displayed.

Expected Results: The time-line is changed to a distance line.

Remarks:

Case Name: Scheduling Window

Case No.: 5-7 **Cross Reference:** 5.1.1.2

Purpose: Demonstrate control over the location and length of the scheduling window.

Assumptions/Constraints: Option A default TMA time-line configuration will be used. If more than one gate is associated with a time-line, the location and length of all associated scheduling windows must be changed to have the same values.

Procedures:

1. Depress Shift-F10 to display the Scheduling Options Panel.
2. Move the cursor to the DRAKO feeder gate Center window within the scheduling panel.
3. Left-hold and drag until the scheduling window length of 14 minutes is selected.
4. Optionally, repeat step 2 and 3 for other feeder gate center windows if the time-line selected is displaying more than one gate.
5. Observe that the length of the vertical bar is changed.
6. Move the cursor to the DRAKO feeder gate Center Horizon.
7. Left-click and drag within the DRAKO feeder gate Center Horizon corresponding to the scheduling freeze time of 30 minutes.
8. Optionally, repeat step 6 and 7 for other feeder gate center windows if the time-line selected is displaying more than one gate.
9. Observe that the location of the vertical bar representing the scheduling window is shifted.
10. Restore the feeder gate Center Window/s and Horizon/s to their original settings by left-clicking the LOAD button to restore original Scheduler file.
11. Depress shift-F10 to remove the panel.

Expected Results: The length of the scheduling window will change to reflect the selected length. The freeze horizon will change to reflect the selected value. Any aircraft within the scheduling window will be rescheduled.

Remarks:

Case Name: Automatic Scheduling

Case No.: 5-8 **Cross Reference:** 5.1.2

Purpose: Demonstrate the automatic scheduling features of the TMA.

Assumptions/Constraints: Option A default time-line configuration will be used.

Procedures:

See Remarks.

Expected Results: Aircraft will be scheduled and delays assigned without human intervention.

Please observe color of time-line aircraft tags:

a) "green" on the ETA time-line denote all aircraft.
b) "yellow" on the STA time-line denote aircraft still being scheduled.
c) "blue" on the STA time-line denote aircraft that were automatically or manually scheduled and are frozen.
d) "orange" on the STA time-line denote aircraft entered Center airspace below scheduling window.
e) "green w/orange size symbol" on STA time-line denote aircraft that have flight plans but are not being tracked.

Remarks: Automatic scheduling is the standard TMA operating mode. The two major sub-functions related to automatic scheduling are demonstrated using procedures described in case 5-7.

Case Name: (Automatic) Schedule Generation

Case No.: 5-9 **Cross Reference:** 5.1.2.1

Purpose: Observe the automatic scheduling of aircraft by the TMA.

Assumptions/Constraints: Option A default time-line configuration will be used. Scheduling window configured normally.

Procedures:

1. Observe aircraft as they enter and depart the scheduling window.

Expected Results: The aircraft ID color will change from yellow to blue.

Remarks: This function can only be observed, since it is performed automatically by the system.

Case Name: Airspace Configuration

Case No.: 5-10 **Cross Reference:** 5.2.4

Purpose: Demonstrate that different operational configurations can be set.

Assumptions/Constraints: Refer to System Configurations for TMA Demonstration, Appendix D, Denver Runway Configuration and TMA time-line display configuration Option C.

Procedures:

See Remarks.

Expected Results:

Remarks: This function is composed of four sub-functions. Detailed procedures demonstrating each of the four configuration changes are contained in cases 5-11 through 5-15. Option C of Appendix D will be used during cases 5-11 through 5-15. The order of the configurations represents a typical weather system moving through the Denver area from Northwest to Southeast.

Case Name: "Runway 26LR at 80 Airport Acceptance Rate (AAR)" Configuration

Case No.: 5-11 **Cross Reference:** 5.2.4

Purpose: Demonstrate that the Denver airspace configuration referred to as Runway 26L/R at 80 AAR is functional.

Assumptions/Constraints: Runway 26 at 80 AAR lands 26L and 26R.

Procedures:

See Remarks.

Expected Results: All aircraft should be shown going to Runways 26L or 26R.

Remarks: This configuration will be used throughout the demonstration.

Case Name: "Runway 8R and 17L at 60 AAR" Configuration

Case No.: 5-12 **Cross Reference:** 5.2.4

Purpose: Demonstrate that the Denver airspace configuration referred to as Runway 8R and 17L at 60 AAR is functional.

Assumptions/Constraints: Aircraft land 8R and 17L.

Procedures:

1. Depress F4 to display the Flow Parameters Panel.
2. Select the acceptance rate by left-clicking on Threshold
3. Select all runways.
4. Left-hold and drag on the Future Acceptance Rate slider bar to 60. This represents a 60 airport acceptance rate in this configuration.
5. Select Minutes till Change to 10 and change the acceptance rate by left-clicking on Set.
6. Observe the number 60 appears in orange on the STA-side of the current runway configuration.
7. Depress F4.
8. Depress F1 to display the Airport Configuration Panel.
9. Move the cursor to the future configuration option box (#18) and left-click.
10. Position the cursor to the Minutes till Change slider bar.
12. Select 10 by clicking on left-holding and dragging.
13. Set the future runway configuration change by left-clicking on Set.
14. Observe C18 appears in orange on the STA-side of the current runway configuration.
15. Depress F1 to remove Airport Configuration Panel.
16. Once C18 has crossed the threshold reference the reconfiguration is complete.

Expected Results: An orange bar should appear on the time line at the time the change is to occur. The new acceptance rate will be reflected in the Flow Parameters Panel and the new airport runway configuration will be shown in the Airport Configuration Panel. The time lines should automatically reconfigure to reflect the new runway assignments to be used. The aircraft should be shown on the correct time line for the correct runway regardless of the gate.

Remarks:

Case Name: "Runway 8 at 32 AAR" Configuration

Case No.: 5-13 **Cross Reference:** 5.2.4

Purpose: Demonstrate that the Denver airspace configuration referred to as Runway 8 at 32 AAR is functional.

Assumptions/Constraints: Runway 8 at 32 AAR lands 8R only.

Procedures:

1. Depress F4 to display the Flow Parameters Panel.
2. Select the acceptance rate by left-clicking on Threshold.
3. Select all runways.
4. Left-hold and drag on the Future Acceptance Rate slider bar to 32. This represents a 32 acceptance rate in this configuration.
5. Select Minutes til Change to 10 and change the acceptance rate by left-clicking on Set.
6. Observe the number 32 appears in orange on the STA-side of the current runway configuration.
7. Depress F4.
8. Depress F1 to display the Airport Configuration Panel.
9. Left-click on the future configuration option box (#9).
10. Position the cursor to the time to change text for the current configuration.
11. Type 10 (representing 10 minutes until change).
12. Set the future runway configuration change by clicking on Set.
13. Observe C9 appears in orange on the STA-side of the current runway configuration.
14. Depress F1 to remove Airport Configuration Panel.
15. Once C9 has crossed the threshold reference the reconfiguration is complete.

Expected Results: An orange bar should appear on the time line at the time the change is to occur. At the time of the change to the new configuration and AAR, the configuration panel should update, reflecting the new configuration and AAR. The time lines should automatically reconfigure to reflect the new runway assignments to be used. The aircraft should be shown on the correct time line for the correct runway based on their gate.

Remarks:

Case Name: "Runway 26 at 45 AAR" Configuration

Case No.: 5-14 **Cross Reference:** 5.2.4

Purpose: Demonstrate that the Denver airspace configuration referred to as Runway 26 at 45 AAR is functional.

Assumptions/Constraints: Runway 26 at 45 AAR lands 26L only.

Procedures:

1. Depress F4 to display the Flow Parameters Panel.
2. Select the acceptance rate left-clicking on Threshold.
3. Select all runways.
4. Left-hold and drag on the Future Acceptance Rate slider bar and set to 45. This represents a 45 acceptance rate in this configuration.
5. Select Minutes til Change to 10 and change the acceptance rate by left-clicking on Set.
6. Observe the number 45 appears in orange on the STA-side of the current runway configuration.
7. Depress F4.
8. Depress F1 to display the Airport Configuration Panel.
9. Left-click on the future configuration 26L_Single_IFR box (#2).
10. Position the cursor to the time to change text for the current configuration.
11. Type 10 (representing 10 minutes until change).
12. Set the future runway configuration change by clicking on Set.
13. Observe C2 appears in orange on the STA-side of the current runway configuration.
14. Depress F1 to remove Airport Configuration Panel.
15. Once C2 has crossed the threshold reference the reconfiguration is complete.

Expected Results: An orange bar should appear on the time line at the time the change is to occur. At the time of the change to the new configuration and AAR, the configuration panel should update, reflecting the new configuration and AAR. The time lines should automatically reconfigure to reflect the new runway assignments to be used. The aircraft should be shown on the correct time line for the correct runway based on their gate.

Remarks: This simulates a reduced flow rate situation.

Case Name: "Runway 26 at 80 Airport Acceptance Rate (AAR)" Configuration

Case No.: 5-15 **Cross Reference:** 5.2.4

Purpose: Return the Denver airspace configuration referred to as Runway 26 at 80 AAR to it's original state.

Assumptions/Constraints: Runway 26 at 80 AAR lands 26L and 26R. Option C time line display will be returned.

Procedures:

1. Depress Shift-F9 and load option_c time-line display by right-clicking to the right of the "< >" symbol.
2. Select option_c by moving cursor to desired location and right-clicking.
3. Load the time line display file by left-clicking on Load.
4. Depress Shift-F9 to remove the Time-line Options Panel.
5. Depress F4 to display the Flow Parameters Panel.
6. Select the acceptance rate by left-clicking on Threshold
7. Select all runways.
8. Left-hold and drag on the Future Acceptance Rate slider bar and set to 80. This represents a 80 acceptance rate in this configuration.
9. Select Minutes til Change to 10 and change the acceptance rate by left-clicking on Set.
10. Observe the number 80 appears in orange on the STA-side of the current runway configuration.
11. Depress F4.
12. Depress F1 to display the Airport Configuration Panel.
13. Left-click on the future configuration 26L_26R_VFR box (#1).
14. Position the cursor to the time to change text for the current configuration.
15. Type 10 (representing 10 minutes until change).
16. Set the future runway configuration change by left-clicking on Set.
17. Observe C1 appears in orange on the STA-side of the current runway configuration.
18. Depress F1 to remove Airport Configuration Panel.
19. Once C1 has crossed the threshold reference the reconfiguration is complete.

Expected Results: All aircraft should be shown going to Runways 26L or 26R.

Remarks:

Case Name: Airport Acceptance Rate (AAR) Change

Case No.: 5-16 **Cross Reference:** 5.2.1

Purpose: Change the future runway acceptance rate without changing the runway configuration.

Assumptions/Constraints: This case assumes the demonstrator returned to the initial configuration of Runway 26L/R VFR #1 with an 80 AAR.

Procedures:

1. Depress F4 to display the Flow Parameters Panel.
2. Select the acceptance rate by left-clicking on Threshold.
3. Select all runways.
4. Left hold and drag on the Future Acceptance Rate slider bar and set to 30.
5. Select Minutes til Change to 10 and change the acceptance rate by left-clicking on Set.
6. Observe the number 30 appears in orange on the STA-side of the current runway configuration.
7. Depress F4.

Expected Results: Immediately, the new acceptance rate will be represented on the time line by an orange horizontal line at the time the change is to occur. In addition the new acceptance rate will be displayed beside the line. When the change takes place, the F4 panel current acceptance rate will be updated and the scheduled times should reflect the new restriction.

Remarks: This item should be repeated with various acceptance rates to demonstrate how the acceptance rate affects the scheduling of aircraft. It may be necessary to extend the length of the time line to view results.

Case Name: Manual Scheduling
Case No.: 5-17 **Cross Reference:** 5.1.3
Purpose: Demonstrate the manual scheduling features of the TMA.
Assumptions/Constraints: Refer to Option A configuration in Appendix D.
Procedures: See Remarks.
Expected Results:
Remarks: This function is composed of several sub-functions. Detailed procedures demonstrating these manual scheduling sub-functions are contained in cases 5-17 through 5-22.

Case Name: Blocked Time Intervals

Case No.: 5-18 **Cross Reference:** 5.1.3.1

Purpose: Insert a blocked time interval into the STA time-line.

Assumptions/Constraints: None.

Procedures:

1. Place the cursor inside the STA time-line within the scheduling window at the desired start of the blocked time interval.

2. Middle-hold and drag the cursor to the desired end of the blocked time interval, then release the middle mouse button.

3. Observe the vertical bar representing the blocked time interval and the automatic rescheduling of aircraft within the blocked interval.

4. Remove the blocked time interval by placing the cursor within the blocked time interval and middle-clicking.

5. Observe the original position of the scheduled aircraft previously blocked.

6. Place the cursor before the scheduling window. Block a time interval.

7. While the cursor is over one of the aircraft within the blocked time interval, right-click. Select "reschedule,global,all" in the sub-menus provided by right-clicking.

8. Observe that frozen aircraft will be rescheduled before the block time interval.

9. Remove the block time interval by clicking the left mouse button.

Expected Results: A vertical orange bar will be drawn just inside the STA time-line. These bars denote the blocked time interval. Any aircraft initially scheduled within the blocked time interval will be rescheduled if aircraft are in the scheduling window.

Remarks: Blocked time intervals can be used for departures or runway clearing operations. Frozen aircraft will require rescheduling to show the effects of the blocked time interval.

Case Name: Blocked Time Slots

Case No.: 5-19 **Cross Reference:** 5.1.3.2

Purpose: Reserve a slot for an unscheduled aircraft.

Assumptions/Constraints: None.

Procedures:

1. Place the cursor inside the STA time-line within the scheduling window at the desired location near a yellow (scheduling) aircraft.
2. Press F8 and dwell on the aircraft to be selected.
3. Observe the current runway of the aircraft.
4. Move the cursor inside the time-line and right-click once. A menu will appear.
5. Select the desired slot type (heavy, large, or small) by placing the cursor on the corresponding menu entry and right-clicking.
6. Observe that a blocked time slot has been inserted into the time-line and aircraft before the reserved slot will be automatically rescheduled.
7. Press F8 and dwell on the aircraft to be selected next.
8. Observe the current runway of the aircraft.
9. Remove the blocked time slot by middle-clicking on the blocked time slot.
10. Observe the original position of the scheduled aircraft previously blocked.
11. Place the cursor before the scheduling window. Block a time slot as in step 3.
12. While the cursor is over one of the rescheduled aircraft, right-click. Select "reschedule, global, all" in the sub-menus provided by right-clicking.
13. Observe that frozen aircraft will be rescheduled before the block time interval.
14. Remove the block time interval by left-clicking.

Expected Results: An orange horizontal bar will appear just inside the STA time-line. A letter designating the slot type (H for heavy aircraft, L for large aircraft, or S for small aircraft) and the runway will appear outside the time-line next to the orange bar. Aircraft in the scheduling window will be rescheduled to accommodate the slot if needed.

Remarks: Blocked time slots can be used to reserve a landing slot for a TRACON or tower en route aircraft. Frozen aircraft will require rescheduling to show the effects of the slot.

Case Name: Reschedule Aircraft

Case No.: 5-20 **Cross Reference:** 5.1.3.3

Purpose: Change the scheduled time of arrival for one aircraft.

Assumptions/Constraints: None.

Procedures:

1. Place the cursor over a scheduled aircraft tag.
2. Middle-hold drag the aircraft tag to the desired location on the scheduled time-line, then release.
3. Observe that if the aircraft is moved back in time a delay will occur.
4. Observe that the aircraft tag will appear in its original scheduled position on the STA time-line.

Expected Results: The aircraft ID will change to bright blue and will appear at the selected location. An exclamation mark ("!") will appear next to the aircraft tag which denotes the aircraft has been manually scheduled and will be broadcast to the DA.

Remarks:

Case Name: Suspend/Resume Scheduling: (a) Suspend Scheduling

Case No.: 5-21 **Cross Reference:** 5.1.3.4

Purpose: Suspend one aircraft from scheduling.

Assumptions/Constraints: None.

Procedures:

1. Move cursor to aircraft tag and right-click.
2. A menu will appear.
3. Right-click on "suspend" option. The menu will disappear and a dialog box will appear.
4. Click on "yes" in the dialog box using the left mouse button.
5. Observe the resultant screen change.

Expected Results: The aircraft tag will be removed from the STA time line. The ETA time line will continue to show the ETA.

Remarks:

Case Name: Suspend/Resume Scheduling: (b) Resume Scheduling

Case No.: 5-22 **Cross Reference:** 5.1.3.4

Purpose: Resume Scheduling of a Suspended Aircraft

Assumptions/Constraints: None.

Procedures:

1. Right-click on the suspended aircraft tag on the ETA time-line.
2. A menu will appear.
3. Right-click on the "Resume" menu option.
4. Observe the resultant screen changes, the suspended aircraft will reappear.

Expected Results: The aircraft tag if not in the scheduling window will appear on the time line in orange indicating that it is a available for scheduling, but is not currently scheduled. If it is in the scheduling window it will be scheduled into the current traffic flow, automatically.

Remarks:

Case Name: Pop-ups

Case No.: 5-23 **Cross Reference:** 5.1.3.5

Purpose: Demonstrate how pop-ups can be scheduled.

Assumptions/Constraints: None.

Procedures:

1. Place the cursor inside the STA time-line within the scheduling window at the desired location near a yellow (scheduling) aircraft tag.
2. Right-click once and a menu will appear.
3. Press F8 and dwell on the aircraft to be selected.
4. Observe the current runway of the aircraft.
5. Select the desired slot type (heavy aircraft, large aircraft, or small aircraft) by placing the cursor on the appropriate menu entry and right-click.
6. Observe that a blocked time slot has been inserted into the time-line and aircraft after the block slot will be automatically rescheduled.
7. Remove the blocked time slot by left-clicking on the indicated slot.

Expected Results: An orange horizontal bar will appear inside the time-line. A letter designating the slot type (H for heavy, L for large, or S for small) will appear outside the time-line next to the orange bar.

Remarks: This procedure is the same one used to reserve time slots (Case 5-19). A slot will be reserved for an aircraft which pops up within the Center area destined for Denver arrivals.

Case Name: Runway Blocking

Case No.: 5-24 **Cross Reference:** 5.2.2

Purpose: Demonstrate the blocking of a runway.

Assumptions/Constraints: None.

Procedures:

1. Place the cursor inside the STA time-line within the scheduling window at the desired start of the blocked time interval.

2. Middle-hold and drag the cursor to the desired end of the blocked time interval, then release the middle mouse button.

3. Observe the vertical bar representing the blocked time interval and the automatic rescheduling of aircraft within the blocked interval.

4. Remove the blocked time interval by placing left-clicking within the interval.

5. Observe the original position of the scheduled aircraft previously blocked.

6. Place the cursor before the scheduling window. Block a time interval.

7. Right-click on the aircraft within the blocked time interval. Select "reschedule, global, all" in the menus provided by right-clicking.

8. Observe that frozen aircraft will be rescheduled after the block time interval.

9. Left-click to remove the block time interval.

Expected Results: A vertical orange bar will be drawn on the STA time-line denoting the blocked time interval. Any aircraft initially scheduled within the blocked time interval will be rescheduled.

Remarks: This procedure is the same one used to block time intervals (Case No. 5-18).

Case Name: Gate Balancing

Case No.: 5-25 **Cross Reference:** 5.2.3

Purpose: Demonstrate manual gate balancing of a single aircraft.

Assumptions/Constraints: None.

Procedures:

1. Position cursor over any aircraft tag and right-click.
2. The aircraft menu will appear.
3. Position the cursor at the end of the line of the "feeder" option over the arrow. Without pressing any buttons, the feeder sub-menu will appear.
4. Right-click on the desired new feeder gate.

Expected Results: The aircraft will be removed from the ETA and STA time line. Tags will reappear on their appropriate time line(s) at their new ETA.

Remarks:

Case Name: TMA Planview Display: (a) Windowed

Case No.: 5-26 **Cross Reference:** 5.3.2

Purpose: Display the TMA Planview Display

Assumptions/Constraints: None.

Procedures:

1. Depress Shift-F11 to display the TMA Planview Display.
2. Depress Shift-F11 again and the Planview Display is reduced in size.
3. Depress Shift-F11 once again to remove the Planview Display.
4. Observe that the screen data underlying the Planview Display has been restored.

Expected Results: The Planview Display will appear in the upper right hand corner of the screen. Each aircraft will be represented by a diamond pointing to an aircraft identification tag. The aircraft displayed will represent the current traffic situation.

Remarks: The TMA Planview Display is referred to as the mini pvd.

Case Name: TMA Planview Display: (b) Dragged

Case No.: 5-27 **Cross Reference:** 5.3.2

Purpose: Demonstrate that the TMA Planview Display can be moved anywhere on the screen.

Assumptions/Constraints: None.

Procedures:

1. Depress Shift-F11 to cause the Planview Display to appear.
2. Move the cursor to the top left border of the Planview Display. A small circle will appear.
3. Middle-hold and drag the window to the desired location.
4. Release the mouse button.
5. Observe that the Planview Display has been moved.
6. Push Shift-F11 when finished to remove the Planview Display.

Expected Results: The TMA Planview Display will move to the selected location.

Remarks:

Case Name: TMA Planview Display: (c) Expanded

Case No.: 5-28 **Cross Reference:** 5.3.2

Purpose: Demonstrate that the TMA Planview Display can be enlarged.

Assumptions/Constraints: None.

Procedures:

1. Push Shift-F11 to cause the TMA Planview Display to appear.
2. Move the cursor to the left border of the TMA Planview Display. A small circle will appear.
3. Hold the control key down while middle-holding and moving the window to the desired location on the screen.
4. Observe that the screen size of the Planview Display has been increased.
5. Push Shift- F11 when finished to remove the TMA Planview Display.

Expected Results: The TMA Planview Display window is enlarged to the selected size.

Remarks:

Case Name: Load Graph Display

Case No.: 5-29 **Cross Reference:** 5.3.3

Purpose: Define the Traffic Load Information graph based on ETA, STA, ASP times, average delays, and flow rates at all runways.

Assumptions/Constraints: An 80 CTAS AAR Configuration.

Procedures:

1. Depress F2 to view the Load Graph Display Panel.
2. Select 4 graphs for this Load Graph Display.
3. Left-click on Define.
4. Define graph 1 by clicking on left mouse button on 1.
5. Select graph 1 reference as threshold.
6. Select graph 1 duration to be 60 minutes.
7. Select graph 1 offset as future time by left-holding and dragging to 0.
8. Select Graph Window to be 15 minutes.
9. Select Graph Scale to be 30 aircraft.
10. Select Graph Load Limit to be 20 aircraft.
11. Select Graph Window Movement to sliding to show a continuous graph.
12. Select the Drako gate for graph 1.
13. Select all runways.
14. Select UTC Time for graph 1.
15. Select Define Plot 1 for graph 1.
16. Select Plot On.

(CONTINUED ON NEXT PAGE)

Expected Results:

Remarks:

Case Name: Load Graph Display

Case No.: 5-29 (Continued) **Cross Reference:** 5.3.3

Purpose: Define the Traffic Load Information graph based on ETA, STA, ASP times, average delays, and flow rates at all runways.

Assumptions/Constraints: An 80 CTAS AAR Configuration.

Procedures:

17. Display the Expected (ETAs) on Plot 1 in green.
18. Use CTAS for the source of our aircraft data for Plot 1.
19. Show all aircraft types on Plot 1.
20. Show all engine types on Plot 1.
21. Select Off under Flight-plans to display tracked aircraft only.
22. Select only the Peak (highest) number to be shown on the selected plot.
23. Enable the Label Legend for plot 1.
24. Left-click to activate Label and title plot 1 "CTAS ETAS" and press <return>
25. Repeat Step 14 thru 22 for plot 2 by displaying Planned (STAs) on Plot 2 in blue and title plot 2 "CTAS STAs" and press <return>
26. Repeat Step 4 thru 23 for the Byson, Keann, and Kiowa feeder gates for graph 2, 3, and 4.
27. Define graph 5 as a comparison of ASP expected and CTAS planned traffic.
28. Define graph 6 as a comparison of CTAS average delay in minutes and CTAS hourly flow rate.
29. Save the graph set up by clicking the left mouse button on Save.
30. Click left mouse button on Done when complete.

Expected Results:

Six Load Graphs will be displayed. The first four represent the four feeder gates at Denver for all runways, time referenced at the threshold. The right-most graphs represent ASP and CTAS expected, planned, average delay, and hourly flow rate for all feeder gates and runways, time referenced at the threshold. The red horizontal bar represents the load limit for each feeder is 20 based on a 80 AAR.

Remarks:

Case Name: Weather Display

Case No.: 5-30 **Cross Reference:** 5.3.1

Purpose: Demonstrate ability to display weather information on the PVD.

Assumptions/Constraints: None.

Procedures:

1. Depress L9 on the PVD.
2. Observe Altimeter setting.
3. Observe winds, including direction and speed.
4. Observe temperature.

Expected Results: Weather information will be readable.

Remarks: Artificial weather information will be shown.

Case Name: Additional TMA Functions

Case No.: 5-31 **Cross Reference:** 5.1.4

Purpose: Demonstrate the additional TMA enhancements since the last TMA Demonstration.

Assumptions/Constraints: None.

Procedures:

See Remarks.

Expected Results:

Remarks: This section is composed of several sub-functions. Detailed procedures demonstrating the new TMA sub-functions are contained in cases 5-32 through 5-35.

Case Name: Traffic Count Overlay

Case No.: 5-32 **Cross Reference:** 5.1.4.1

Purpose: Provides the TMC a tabular list of expected arrivals, planned arrivals, and actual feeder gate crossings for a given interval. Data can be recorded and printed in report format.

Assumptions/Constraints: None.

Procedures:

1. Depress F5 to display the Traffic Count Window.
2. Left-click over the Display On selection.
3. Observe the Denver Arrival Traffic Counts in 15 minute UTC intervals.
4. Move the Traffic Count Display by left-clicking on Move.
5. Observe the message displayed on the bottom of the Traffic Count Window.
6. Move the cursor to the desired location on the time line display and left-click.
7. Observe the Denver Arrival Traffic Count Display is relocated.
8. Print the Traffic Count by left-clicking on Print.
9. Modify the Traffic Count UTC starting hour in the report by positioning the cursor within the Traffic Count Window.
10. Depress the delete key twice and type the desired starting hour for the report.
11. Left-click on Print.
12. Observe the change in the report.
13. Left-click on Display Off to turn off the Traffic Count overlay.
14. Depress F5 to disable the Traffic Count Window.

Expected Results:

Remarks: Traffic count overlay automatically counts the arrival traffic.

Case Name: Rush Alert

Case No.: 5-33 **Cross Reference:** 5.1.4.2

Purpose: Notifies the TMC when a rush will occur within a predefined time interval.

Assumptions/Constraints: The rush alert will be triggered from the hourly acceptance rate set.

Procedures:

1. Depress Shift-F12 to display the Rush Alert Configuration Panel.
2. Select the Rush Window to be a 15 minute interval.
3. Select the Airport Acceptance Rate Source to be ASP.
4. Select the Rush Alert Display Options as Text Description, Time-line Bars, Flashing Alert, and Full Pop-up Text positioning to each and clicking the left mouse button, respectively.
5. Select the Alert Diameter to be 90.
6. Depress Shift-F12 again.
7. Depress Shift-F9 to display the Time-line Options Panel and select Rush Alert on any one of the time-lines displayed.
8. Depress Shift-F9 to remove the Time-line Options Panel.
9. Observe the red flashing dot in the left hand corner of the screen.
10. Dwell on the dot and a text overlay appears indicating the number of arrivals and the rush interval.
11. Observe the red brackets on the time-line which indicate the earliest interval in which the acceptance rate is exceeded.

Expected Results: When the acceptance rate is 40 aircraft per hour and a 15 minute interval is predefined, the rush alert will be triggered for the earliest 15 minute interval in which at least 11 aircraft are expected.

Remarks: Unlike the traffic count where the interval referred to specific 15 minute blocks of time, the rush alert examines every 15 minute interval, i.e. [00,14],[01,15],[02,16], etc.

Case Name: National Airspace Performance Reporting System (NAPRS) Delay Reporting

Case No.: 5-34 **Cross Reference:** 5.1.4.3

Purpose: Method of recording delay data for aircraft in Center airspace, and provides a printed report of the statistics.

Assumptions/Constraints: None.

Procedures:

1. Depress F6 to display the Status Window.
2. Left-click on the Start NAPRS button.
3. Observe the minimum aircraft delay in minutes is set to 15 before aircraft are entered into the NAPRS report.
4. Left-click on End NAPRS and Print Forms to conclude the reporting process.

Expected Results: The TMA NAPRS delay report will include three pages - one arrival sheet covering all gates for ASP data labeled ZDV ARRIVAL DELAYS (ASP), one arrival page covering all gates for CTAS data labeled ZDV ARRIVAL DELAYS (CTAS), and a page for departures labeled ZDV DEPARTURE DELAYS.

Remarks: In case of an unanticipated system shutdown, the NAPRS data is saved to a file every 30 seconds. After the TMA is brought back up and you select to start NAPRS delay reporting again, a window will appear asking to continue the previous run or start again with the date and time of the previous run.

Case Name: Satellite Airport Departure Release Time

Case No.: 5-35 **Cross Reference:** 5.1.4.4

Purpose: Demonstrate a scheduled slot for proposed aircraft that have not yet departed satellite airports.

Assumptions/Constraints: Option D default time-line configuration will be used.

Procedures:

1. Middle-click on aircraft tag on the departure time line to display the Departure Time Window.
2. Change the proposed flight time (departure time) by left-clicking to the right of the number to change, delete existing number, and type new one.
3. Left-click on the SCHEDULE button to schedule a slot for the aircraft in the CTAS sequence.
4. Left-click on the CLOSE button to remove the Departure Time Window.

Expected Results: Aircraft will moved on the ETA and STA sides of the departure time line as appropriate.

Remarks: This allows the TMC to change the proposed departure time to a later release if there is delay with planned airborne delays.

APPENDIX C. TMA DEMONSTRATION REPORT FORM

Case Name:	
Case No.:	**Cross Reference:**
Observed Results:	
Deviations:	
Remarks:	
Demonstration Case Results: **Passed:** ☐ **Passed with Comments:** ☐ **Failed:** ☐	

APPENDIX D. SYSTEM CONFIGURATIONS FOR TMA DEMONSTRATION

1. DENVER RUNWAY CONFIGURATIONS

Note: The following runway configurations will be utilized for demonstration purposes. Live traffic at Denver will be used. The actual runway in use at Denver during the "Demonstration" is irrelevant. The configuration numbers and runway descriptions depicted below are contained in the airport configuration options available in the Airport Configuration Panel by using the F1 function key.

a. #1 = 26L_R_VFR (RWYS 26L/R) at an 80 acceptance rate.
b. #18 = 17L_8_IFR (RWYS 17L/8) at a 60 acceptance rate.
c. #9 = 8R_SINGLE_IFR (RWY 17L) at a 32 acceptance rate.
d. #2 = 26L_SINGLE_IFR (RWY 26L) at a 45 acceptance rate.

During the demonstration the above configurations, a, b, c, and d, will be performed in stages relating to cases 5-10 through 5-15.

2. TMA TIME-LINE DISPLAYS

The TMA configuration displays will be configured with six time-lines as depicted below, e.g. Option A, B, C, and D. The runway configurations during the TMA functional demonstrations will be as #1 above (RWYS 26L/R AT AN 80 RATE). ETAs will be depicted on the right side of the time-lines and STAs will be depicted on the left.

Option A: (ARTCC Depiction - RWYs 26L/R)

Time-line #1 - DRAKO feeder gate reference, no gap.
Time-line #2 - KEANN feeder gate reference, no gap.
Time-line #3 - BYSON feeder gate reference, no gap.
Time-line #4 - KIOWA/IOC feeder gate reference, no gap.
Time-line #5 - Threshold reference, left-side of time-line KE KI/right-side of time-line KE KI feeder gates, 10 minute gap.
Time-line #6 - Threshold reference, left-side of time-line DR BY/right-side of time-line DR BY feeder gates, 10 minute gap.

Option B: (ARTCC and TRACON Depiction - RWYs 26L/R)

Time-line #1 - TRACON, Threshold reference, all feeder gates, no gap.
Time-line #2 - Distance (TRACON), Threshold reference, all feeder gates, no gap.
Time-line #3 - CENTER, DRAKO and KEANN feeder gates referenced, no gap.
Time-line #4 - CENTER, BYSON and KIOWA feeder gates referenced, no gap.
Time-line #5 - CENTER, all feeder gates referenced, no gap.
Time-line #6 - Distance (Center), threshold referenced, all feeder gates, 65 mile gap.

Option C: (ARTCC Depiction - RWYs 26L/R, RWYs 8L/R, and RWYs 17L/R)

Time-line #1 - CENTER, Threshold referenced, RWYs 26L/R, DRAKO and KEANN feeder gates, 10 minute gap.
Time-line #2 - CENTER, Threshold referenced, RWYs 8L/R, DRAKO and KEANN feeder gates, 10 minute gap.
Time-line #3 - CENTER, Threshold referenced, RWYs 17L/R, DRAKO and KEANN feeder gates, 10 minute gap.
Time-line #4 - CENTER, Threshold referenced, RWYs 26L/R, BYSON and KIOWA feeder gates, 10 minute gap.
Time-line #5 - CENTER, Threshold referenced, RWYs 8L/R, BYSON and KIOWA feeder gates, 10 minute gap.
Time-line #6 - CENTER, Threshold referenced, RWYs 17L/R, BYSON and KIOWA feeder gates, 10 minute gap.

Option D: (ARTCC Depiction - All RWYs)

Time-line #1 - CENTER, DRAKO feeder gate referenced, no gap.
Time-line #2 - CENTER, KEANNE feeder gate referenced, no gap.
Time-line #3 - CENTER, BYSON feeder gate referenced, no gap.
Time-line #4 - CENTER, KIOWA feeder gate referenced, no gap.
Time-line #5 - CENTER, Threshold referenced, All feeder gates 10 minute gap.

Time-line #6 - CENTER, Satellite referenced, All feeder gates, -5 minute gap, planned arrivals only.

Time-line Options Display (Shift-F9) settings will be as follows:

1. TYPE (of traffic): Actual.
2. REFERENCE: Threshold and Feeder as appropriate.
4. FONT: Large.
5. RUSH ALERT: Not selected.
6. LENGTH (length of time-line in minutes): 45.
7. GAP (base of time-line): 0 (zero).
8. TIME DISPLAY: Active and Planned.
9. Host: CTAS.
10. Host: ETAs on right, STAs on left (of each time-line).
11. INCLUDED AREAS: Center and TRACON.
12. INCLUDED GATES: As required.
13. INCLUDED RUNWAYS: As required.
14. Distance time-lines will be set to:
    TRACON = 0 (zero) to 68 miles
    CENTER = 65 to 300 miles.
12. Schedule Horizons (for option A):
    START at 32 minutes (start of ARTCC schedule window).
    DURATION will be set at 10 (length of ARTCC schedule window).

3. PVD DISPLAY

There will be one PVD Display depicting current live radar traffic. Refer to FAA Technical Center TMA Demonstration Laboratory Configuration, Figure 3.1-1.

The PVD will display the ZDV Sector 55 (all feeder gate traffic) 200 nmi from the threshold. Time-line length will be set to 30 minutes with a gap of 10 minutes.

ATTACHMENT A. 24 HOUR PROCEDURES.

24 Hour Procedures:

1. ACD-340 representatives will monitor TMA functionality for a continuous 24 hour period.

2. During each 8 hour monitor shift the following functions will be accomplished at least once by the designated ACD-340 observer:

   a. START a NAPRS report at the beginning of each 8 hour shift and print a NAPRS report at the end of each shift.
   b. Reschedule 1 or more aircraft.
   c. Change runway configuration.
   d. Block 1 arrival runway.
   e. Change time-line configuration (Appendix D: Option A, B, C, or D).
   f. Change airport acceptance rate.
   g. Block a time interval on a time-line.
   h. Print a traffic count.
   i. Build a Load Graph Display.
   j. Change a proposed departure on the departure time-line. (Appendix D: Option D).
   k. Display a Rush Alert on a time-line.
   l. Display the TMA PVD window.

3. Accomplishment of the above functions during each shift will be documented and validated by each participant using a "TMA Demonstration Report Form". Forms shall be signed and retained with other demonstration documents.