ACD
34093
4

COPY 1

AVAILABLE IN
ELECTRONIC FORMAT

ACD34093/4

U. S. Department
of Transportation

Federal Aviation
Administration

FEDERAL AVIATION ADMINISTRATION
JAN 27 1993
TECHNICAL CENTER LIBRARY
ATLANTIC CITY

FAA TECHNICAL CENTER

TRAFFIC MANAGEMENT ADVISOR (TMA)

FUNCTIONAL AND NON-INTERFERENCE

DEMONSTRATION PLAN

(DENVER CONFIGURATION)

RELEASE 1.3.2t

December 16, 1992

Engineering, Research, and Development Service
Research Directorate for Aviation Technology
FAA Technical Center
Atlantic City International Airport, NJ 08405

DOT/FAA
/CT-ACD
34093/4
c.1

FOREWORD

This plan would not have been possible without the help of participants in the FAA TATCA Program (Office (ARD-40), NAS System Engineering Service (ASE-1), Advanced Systems and Facilities Division (ATR-300), NASP and Future Systems Branch (ATR-330), Office of Traffic System Management, Office of Civil Operations (ATM-100), FAA Technical Center ATC Technology Branch (ACD-340), NASA Ames Research Center, and CTA Incorporated. The following individuals were instrumental in the development of this plan:

FAA Headquarters, TATCA Program Office, ARD-40:
Chuck Friesenhahn
Craig Marina
Bill Bamberg
Janis Hooten
Mike Rymond
Joan Snowden

FAA Headquarters, NAS System Engineering Service, ASE-1:
Ron Morgan

FAA Headquarters, Advanced Systems and Facilities Division, ATR-300:
Pete Swears

FAA Headquarters, NASP and Future Systems Branch, ATR-330:
Joe Pitts
Charles Johnson

FAA Headquarters, Office of Traffic Management, Office of Civil Operations, ATM-100;
Bill Marx
Barbara Smith

FAA Technical Center, ATC Technology Branch, ACD-340:
Lee Paul
Don Roberts
Jim Thomas
Bud Timoteo
Phil Zinno

NASA Ames Research Center:
Chris Brinton
Tom Davis

CTA INCORPORATED:
Chris Ciolorito
Joe Pointkowski

It is my privilege to submit this demonstration plan to the program office for its use in the TATCA Program.

Richard D. Page, ACD-340
Senior Technical Program Manager
FAA Technical Center

TABLE OF CONTENTS

LIST OF ILLUSTRATIONS ii

LIST OF ACRONYMS iii

GLOSSARY iv

1. INTRODUCTION 1
   1.1 BACKGROUND 1
   1.2 PURPOSE 2
   1.3 SCOPE 2
   1.4 SCHEDULE 3
   1.5 DOCUMENT ORGANIZATION 3

2. REFERENCE DOCUMENTS 6

3. DEMONSTRATION ENVIRONMENT 7
   3.1 SOFTWARE CONFIGURATION 7
   3.2 HARDWARE CONFIGURATION 11
   3.3 INTERFACES 14
   3.4 PERSONNEL RESOURCES 14

4. CENTER HOST NON-INTERFERENCE DEMONSTRATION 16
   4.1 PERFORMANCE 16
   4.2 FAILURE INDEPENDENCE 16
   4.3 CONTINUOUS OPERATIONS 17

5. TMA FUNCTIONAL DEMONSTRATION 18
   5.1 TIME-LINES 18
   5.2 OPERATIONAL CONFIGURATIONS 22
   5.3 AUXILIARY LOGICAL DISPLAYS 22

6. TMA NON-DEMONSTRABLE FUNCTIONS 24
   6.1 DESCENT ADVISOR DEPENDENT 24
   6.2 FINAL APPROACH SPACING TOOL DEPENDENT 24
   6.3 EXPEDITE DEPARTURE PATH DEPENDENT 24

LIST OF ILLUSTRATIONS

Figure 1.4-1 TMA Demonstration Structure 4
Figure 3.1-1 FAA Technical Center TATCA Laboratory TMA Demonstration Design . . 9
Figure 3.1-2 TMA Demonstration Software Configuration 10
Figure 3.2-1 TMA Demonstration Hardware Configuration 12
Figure 3.2-2 HOST/TMA Interface 13

LIST OF ACRONYMS

AAR	Airport Acceptance Rate
AAS	Advanced Automation System
ARTCC	Air Route Traffic Control Center
ASP	Arrival Sequencing Program
ATC	Air Traffic Control
CM	Communications Manager
CPU	Central Processing Unit
CTAS	Center-TRACON Automation System
DA	Descent Advisor
DARC	Direct Access Radar Channel
EDP	Expedite Departure Path
ETA	Estimated Time of Arrival
FAA	Federal Aviation Administration
FAST	Final Approach Spacing Tool
GPO	General Purpose Output
IFR	Instrument Flight Rules
LAN	Local Area Network
MAPS	Measure Scale Analysis and Prediction System
NAPRS	National Airspace Performance Reporting System
NAS	National Airspace System
NASA	National Aeronautics and Space Administration
NMI	Nautical Miles
PAMRI	Peripheral Adapter Module Replacement Item
PVD	Plan View Display
SDT	System Development Team
STA	Scheduled Time of Arrival
TATCA	Terminal Air Traffic Control Automation
TM	Traffic Manager
TMA	Traffic Management Advisor
TMC	Traffic Management Coordinator
TMU	Traffic Management Unit
TRACON	Terminal Radar Approach Control
TTMA	TRACON Traffic Management Advisor

GLOSSARY

AIRPORT ACCEPTANCE RATE (AAR) - A dynamic input parameter specifying the number of arriving aircraft which an airport can accept from the Air Route Traffic Control Center (ARTCC) per hour. The AAR is used to calculate the desired interval between successive arrival aircraft.

BLOCKED TIME INTERVAL - An interval of time in which aircraft are not allowed to be scheduled. The Traffic Manager (TM) can manually enter such intervals into the Traffic Management Advisor (TMA) database. Air Traffic Control (ATC) uses a blocked time interval to give controllers time to temporarily close a runway, allow room between arrivals for one or more departures, or handle an emergency.

BLOCKED TIME SLOT - A time interval set aside as a place holder in the schedule for aircraft originating from nearby feeder airports or aircraft that fly at altitudes too low to be tracked by Center radar. This may be designated as a heavy, large, or small aircraft, and the TMA scheduler will compute the required spacing for this slot based on the aircraft behind it in the landing schedule. This could be used for pop-ups or tower en route aircraft.

CENTER-TRACON AUTOMATION SYSTEM PROJECT (CTAS) - A project within the TATCA Program to evaluate and implement a set of automation tools within candidate Centers and Terminal Radar Approach Controls (TRACONs). The CTAS term is also used to refer to the collection of integrated software tools developed at National Aeronautics and Space Administration (NASA) Ames Research Center and used as a basis for the CTAS project.

DELAY TIME - The amount of time that the arrival must lose to cross the meter fix at the assigned meter fix time.

DESCENT ADVISOR (DA) - Software and a user interface that provides the ARTCC radar controllers with optional advisories that help them to direct individual aircraft for merging and descent into the terminal area. The resulting flight profiles are computed to meet the TMA-generated schedules accurately, with fuel efficient descent from cruise altitudes.

ESTIMATED TIME OF ARRIVAL (ETA) - The estimated time at which the aircraft will land or cross a selected waypoint, assuming that there will be no conflicts with other aircraft in the process. It is based on either (a) the aircraft's current position and velocity as measured by the tracking radar, the expected speed profile that the aircraft will follow to reach the waypoint, and the wind estimate used by the Final Approach Spacing Tool (FAST) trajectory computations; or (b) the expected times as derived from the flight plans within the Center Host computer. From tracked aircraft, the ETAs are updated about twice per minute.

FEEDER FIX - The fix depicted on Instrument Approach Procedure Charts which establishes the starting point of the feeder route.

FEEDER ROUTE - A route depicted on instrument approach procedure charts to designate routes for aircraft to proceed from the en route structure to the initial approach fix.

FINAL APPROACH FIX - The fix from which the final approach Instrument Flight Rules (IFR) to an airport is executed and which identifies the beginning of the final approach segment. It is designated on the Government charts by the Maltese Cross symbol for non-precision approaches and the lighting bolt symbol for precision approaches; or when ATC directs a lower-than-published Glideslope/path Intercept Altitude, it is the resultant actual point of the glideslope/path intercept.

FIX - A geographical position in the airspace determined by either visual reference to the ground, reference to one or more radio NAVAIDs, celestial plotting, or by another navigational device, to which an aircraft by be directed to fly.

FLIGHT PLAN - Information relating to the intended flight that is followed with a Flight Service Station or an ATC facility.

FREEZE HORIZON - The time at which aircraft are frozen in schedule. It is shown on the ETA time-line of the TMA as a short horizontal blue bar marking the end of the scheduling window. Aircraft with a fixed Scheduled Time of Arrival will be the catalyst for future CTAS-generated trajectories through the Center and Terminal airspace to runway threshold.

GATE BALANCING - Distributing arrival aircraft among several arrival routes to evenly level sector load. This is a CTAS function.

INTERNET - Wide-area network connecting a variety of different machine architectures around the world.

LOGICAL DISPLAY - A window on a physical display. Multiple logical displays can be viewed on one physical display.

METERING - A method of time-regulating arrival traffic flow into a terminal area so as not to exceed a predetermined terminal acceptance rate.

METERING FIX - A fix along an established route over which aircraft will be metered prior to entering terminal airspace. Normally, this fix should be established at a distance from the airport which will facilitate a profile descent 10,000 feet above airport elevation or above.

PHYSICAL DISPLAY - A hardware device capable of displaying text or graphics.

REAL DATA - Live or recorded Center Host data consisting of tracking, flight plan, and metering data.

RUNWAY CONFIGURATION - The particular set of runways in use at an airport for departures and arrivals and the types of operations allowed on each.

RUSH ALERT - A mechanism provided by the TMA to allow the Traffic Management Coordinator (TMC) to monitor a number of aircraft within a specified block of time against the current acceptance rate. The TMC will be notified when the current acceptance rate is exceeded.

SCHEDULE - In this plan, the term "schedule" does not refer to the traditional usage (i.e., the airlines' schedule). The CTAS definition of a schedule is (a) the specific order, or sequence, in which each aircraft shall cross either a certain waypoint or the landing threshold, and (b) the specific time at which they are to cross a waypoint or land.

SCHEDULED TIME OF ARRIVAL (STA) - This is the desired time that the aircraft should land or cross a selected waypoint. It is computed based on the interval of elapsed time to be spent in flying from the aircraft's current position to landing or crossing the selected waypoint. The STA is generated automatically by the TMA scheduling software, or it can be set manually by the Traffic Manager (TM) or the radar controller whose sector the aircraft is flying.

SCHEDULING HORIZON - An interval specified by the TM. It determines when an aircraft is first added to the list of aircraft currently being scheduled, referred to as the scheduled list. An aircraft is added to this list when its time to landing based on its current ETA first penetrates (becomes less than the time of) the scheduling horizon. The top of the scheduling window is sometimes known as the scheduling horizon.

SCHEDULING WINDOW - An interval specified by the TM in which aircraft are actively sequenced and scheduled by the TMA scheduling software. It is shown only on the ETA time-line with a runway threshold reference and is marked by a vertical yellow line beside the time-line. The window remains in a fixed position on the TMA screen, a specified number of minutes above (before) the threshold reference at the bottom of the ETA time-line, as time passes.

TERMINAL AIR TRAFFIC CONTROL AUTOMATION PROGRAM (TATCA) - This is an Federal Aviation Administration (FAA) program consisting of a series of projects that will lead to a near-term national implementation of terminal ATC automation functions in the pre-Advanced Automation System (AAS) environment, followed by eventual AAS implementation. TATCA includes all elements of the CTAS and CRDA efforts.

TIME-LINE - A display format where aircraft data are placed on an axis corresponding to the arrival time of aircraft at the runway threshold, a metering fix, or final approach fix.

TRAFFIC MANAGEMENT ADVISOR (TMA) - The automation system provided by TATCA to allow the Center traffic manager to control the flow of traffic into the terminal area. The process starts about 200 nautical miles (NMI) from touchdown in the Center airspace and again at the TRACON boundary.

TRACON TRAFFIC MANAGEMENT ADVISOR (TTMA) - The automation system provided by TATCA to allow the TRACON radar controllers to monitor the traffic into the terminal area. The process starts within 15 to 20 minutes of the meter fix. This permits an automatic and continuously updated coordination of the traffic transition from Center to TRACON airspace.

SUMMARY

As a result of a January 28, 1991 meeting of FAA Associate Administrators, the Terminal Air Traffic Control Automation (TATCA) Program received permission to proceed with initial field development and evaluation of selected TATCA functions. Subsequently, the Associate Administrator for Air Traffic designated Denver and Dallas/Fort Worth TRACONs and their associated Centers as the field development and evaluation sites.

The initial Traffic Management Advisor (TMA) was demonstrated to Air Traffic personnel at the FAA Technical Center, October, 1991. Following this demonstration, results were submitted to the Air Traffic Service and the TATCA Program Office defining TMAs readiness to begin field development and evaluation at the Denver Center.

The TMA has undergone software modification based on new TMA functionality developed from Air Traffic's comments gathered as part of the System Development Team (SDT) efforts, and results of the informal evaluation at Denver Center. The Air Traffic Service and the TATCA Program Office have required that TMA be demonstrated incorporating the new functionalities and also show non-interference with the existing Denver Center Host prior to conducting a formal assessment at Denver Center.

The TMA will be the first CTAS automation tool to be formally evaluated. This formal assessment at the Denver Center will be limited in scope, as the TMA will not be used operationally during the period. Instead, the capabilities of TMA will be displayed off-line to acquire relevant comments from the Traffic Management Coordinators (TMCs). The information acquired during the formal assessment will be used to develop the TMA's potential as an operational tool.

TMA functions and the non-interference aspect of the Host/TMA interface will be demonstrated at the FAA Technical Center prior to the formal assessment at the Denver Center. This effort will demonstrate the latest TMA functional modifications as well as show the non-interference with the existing Denver Center Host. Once the FAA Technical Center demonstration has been accomplished, and Air Traffic Service provides the approval, the TMA Formal Assessment will commence at Denver Center.

This plan describes the overall philosophy to be used for the FAA Technical Center TMA demonstration. Detailed procedures for the demonstration are contained in the TMA Functional and Non-Interference Demonstration Procedures document. Results of the demonstration will be submitted to Air Traffic and the TATCA Program Office prior to the formal assessment effort.

1. INTRODUCTION

This document comprises the Federal Aviation Administration (FAA) Traffic Management Advisor (TMA) Functional and Non-Interference Demonstration Plan. The TMA will be demonstrated at the FAA Technical Center prior to formal assessment at the Denver Center. TMA is an automation tool which is part of the Center-TRACON Automation System (CTAS) developed by NASA Ames Research Center. CTAS is an integral part of the FAA Terminal Air Traffic Control Automation (TATCA) Program.

1.1 BACKGROUND

The FAA initiated the TATCA Program in 1986 to provide solutions to the growth in air traffic and increased terminal area delays. The goal of TATCA is to provide automation tools which will aid in the handling of larger volumes of departing and arrival aircraft in major terminal areas. The program's objectives are to provide effective automation prior to the Advanced Automation System (AAS) and to develop plans to achieve increased automation for the AAS in the late 1990's. The FAA is in the process of evaluating an integrated set of automation tools, developed by the NASA Ames Research Center, known as CTAS.

CTAS was developed primarily to aid the Traffic Management Coordinator (TMC), and the Center and the Terminal Radar Approach Control (TRACON) controller to sequence and schedule arrival traffic at major center and terminal areas. The automation tool set was developed to optimize traffic flow, increase fuel efficiency, reduce delays, and improve TMC and controller productivity. CTAS sequences, schedules, and generates clearance advisories to assist, not replace, the TMC and controller in making decisions.

CTAS comprises four primary automation components:

a. **the TMA** which gives the TMC at the Traffic Management Unit (TMU) automation tools to efficiently schedule and sequence arrival traffic;

b. **the Descent Advisor (DA)** which provides Center controllers recommended control actions to help aircraft meet the TMA schedule;

c. **the Final Approach Spacing Tool (FAST)** which assists TRACON controllers in sequencing and spacing aircraft on final approach so as to optimize runway throughput and reduce delays; and,

d. **the Expedite Departure Path (EDP)** tool which provides a method to merge

satellite airport departures into the arrival stream at the primary airport.

1.2 PURPOSE

This document presents a plan to demonstrate limited TMA functions at the FAA Technical Center to show that the automation tool is suitable for formal assessment at the Denver Center. The demonstration will also show that there is no operational impact on the Denver Center Host computer performance as a result of the TMA interface. Real (live and pre-recorded) radar tracking data and flight plans from the Denver Center Host will be used during the demonstration.

In order to begin the formal development and evaluation efforts at Denver and then Fort Worth Centers, an initial baseline system of TMA hardware and software will be established and demonstrated at the FAA Technical Center.

Once the demonstration of the enhanced TMA system design has been completed successfully at the FAA Technical Center, a formal assessment will be conducted at the Denver Center. Once the Denver formal assessment is completed, and approved recommendations, if any, are incorporated into the TMA system, then additional formal development and evaluation efforts will be undertaken.

1.3 SCOPE

This demonstration plan identifies the TMA functional capabilities that will be demonstrated using the hardware and software which will be utilized at the Denver Center formal assessment. The plan is limited in scope. TMA functions, which do not require clearances to active arrival aircraft, will be shown in a non-operational environment for demonstration purposes only. Non-interference between the TMA and the Denver Center Host computer will be shown. Additionally, the ability to incorporate a remote TMA monitor for the TRACON will be shown. During the FAA Technical Center demonstration, the TMA will receive inputs from the Denver Center Host interface. Since this is a one-way interface, no data will be transmitted from the TMA to the Denver Center Host computer.

Prior to the FAA Technical Center demonstration, criteria will be developed, jointly with Air Traffic representatives, to assist in evaluating the success of the demonstration. At the completion of the demonstration, a decision as to whether or not to proceed with the formal assessment at the Denver Center will be made. A Denver Center formal assessment will not commence until a successful TMA demonstration has been completed at the Technical Center. A summation of the FAA Technical Center's demonstration, including events and

recommendations, will subsequently be prepared and validated by representatives of the FAA TATCA Program Manager, ARD-40, and Associate Program Manager, ATR-300.

1.4 SCHEDULE

The FAA Technical Center's functional and non-interference demonstration will encompass interface and functional issues contained in Sections 4 and 5, respectively. Detailed procedures outlining specific activities will be developed and used during the demonstration.

The TMA demonstration will be accomplished in three phases.

Phase 1. Host/TMA failure independence will be demonstrated using the Denver Center Host Computer System. TMA failure will be induced and its effects on the Denver Center Host Computer System will be observed.

Phase 2. The TMA functions will be demonstrated using live data from the Denver Host computer. The actual Denver operational airspace configuration, including the route structure, sectorization, and traffic flow, will therefore be reflected in the demonstration.

Phase 3. This will encompass an agreement by ARD & AAT of TMA suitability for a Denver Center formal assessment.

The personnel responsible for determining TMA suitability for formal assessment at Denver Center are to be present at the FAA Technical Center during the demonstration.

1.5 DOCUMENT ORGANIZATION

This document is organized into six major areas. Figure 1.4-1 depicts the TMA Functional and Non-Interference demonstration structure. They are presented as follows:

a. section 1 describes the introduction of the demonstration plan;

b. section 2 provides a list of all reference materials used in the organization and creation of this demonstration plan;

c. section 3 addresses the resources required for exhibiting the TMA;

d. section 4 describes the non-interference demonstration with the Denver Center Host computer during receipt of live data;

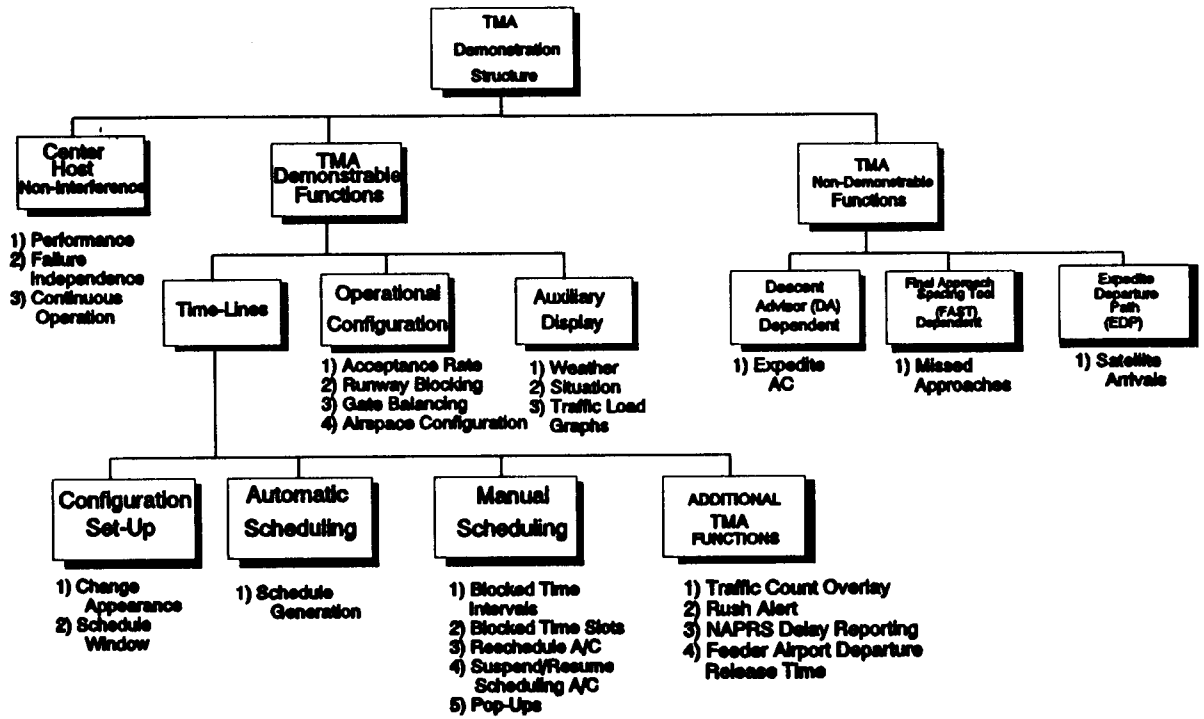

Figure 1.4-1 TMA Demonstration Structure

e. section 5 presents the demonstrable TMA functions including time-lines, airspace configuration, and auxiliary displays; and,

f. section 6 lists the non-demonstrable TMA functions.

2. REFERENCE DOCUMENTS

1. Air Traffic Control Handbook, Order 7110.65F, September 21, 1989, FAA Air Traffic Operations Service.

2. CTAS Description To Support An Operational Concept Document, November 1990, Seagull Technology, Inc.

3. Denver Traffic Management Advisor (TMA) Assessment Plan, Initial Draft, October 9, 1992, NASA Ames Research Center.

4. Design of Automated System for Management of Arrival Traffic, June 1989, NASA-Ames Research Center.

5. One-way Transmission of Selected Air Traffic Data to NASA-Ames Research Center, National Airspace System (NAS) Change Proposal, February 18, 1992, FAA AT/DISC/NASA.

6. Traffic Management Advisor (TMA) Reference Manual, ATC Field Systems Office, October 5, 1992, NASA Ames Research Center.

7. Traffic Management Advisor (TMA) Reference Manual, Supervisor's Supplement, ATC Field Systems Office, October 5, 1992, NASA Ames Research Center.

8. Traffic Management Coordinator User's Guide for ESP/ASP, R.L. Cherone, P.A. Ostwald, September 1990, the MITRE Corporation MTR-90W00111.

9. Working Paper, Functional Description, and Plan for Evaluation of the Traffic Management Advisor, July 1, 1991, J.L. Garcia, F. Neuman, L. Tobias.

3. DEMONSTRATION ENVIRONMENT

This section describes the software and hardware configuration, the interfaces, and the personnel resources required to demonstrate the TMA at the FAA Technical Center TATCA Laboratory. The demonstration emphasis is to exhibit TMA functionality from an Air Traffic perspective. Formal testing of software internals ***will not form*** part of the demonstration; however, exercising of TMA functions depicted in Section 5 will be performed. The TMA and associated software will reside on a network of SUN Microsystems computers. This is the same hardware configuration that will be used for formal Denver assessment, with the exception of a modem interface, which will be replaced by a direct serial connection. This hardware and software comprises the TMA Demonstration System. A one-way interface from the Denver Host computer to the TMA Demonstration System will provide the live data.

The Direct Access Radar Channel (DARC) will not form part of the TMA demonstration environment.

3.1 SOFTWARE CONFIGURATION

The TMA demonstration will use suitably configured Denver Host and CTAS software. The Host software will consist of the operational Denver Host software configuration, which has been modified to include the software patch [6] necessary to send data (see Section 3.3.1) to the CTAS. This patch was developed for the purpose of sending live data to NASA Ames Research Center for CTAS software testing, and is currently being used successfully at Denver Center for this purpose, with no Host impact. It will be used to send live data to the FAA Technical Center for the TMA Functional and Non-Interference demonstration.

The demonstration software at the FAA Technical Center will consist of the TMA and a portion of the DA. The primary TMA components to be used during the demonstration, in addition to the standard TMA scheduling software, are:

a. the Communications Manager (CM);
b. the Radar Daemon;
c. the Weather Daemon; and,
d. the Statistics Collection software.

Please note: For demonstration purposes weather profile information will be shown on the Plan View Display (PVD).

Figure 3.1-1 depicts the TATCA Laboratory equipment layout for the TMA Functional and Non-Interference demonstration.

The TMA workstation software controls three primary logical displays (windows):

a. the Time-line display which allows the TMC or Traffic Manager to visually sequence and schedule arrival aircraft in a mixed graphic and alphanumeric format;

b. the Situation display, a small PVD-like display which allows the TMC to monitor center arrival traffic; and,

c. the Traffic Load Graph display which allows the TMC to monitor information about the number of aircraft in a specified block of time.

The DA software is comprised of four major components:

a. the Trajectory Synthesizer Algorithms;
b. the Plan-View Display (PVD);
c. the Descent Advisory Generation; and
d. the Atmospheric Data Profiler/Weather information.

The DA Trajectory Synthesizer Algorithm component and the Atmospheric data profiler will be used during the demonstration. The other components will either be turned off or their outputs ignored. The Trajectory Synthesizer Algorithm component is necessary to run the TMA, as it processes data and generates Estimated Time of Arrivals (ETAs) which are used by the TMA. ***The TMA will not run without this DA component.*** The Atmospheric Data Profiler displays wind, pressure, and temperature needed for accurate DA ETA calculations. Figure 3.1-2 depicts the interrelationships between the TMA and the DA.

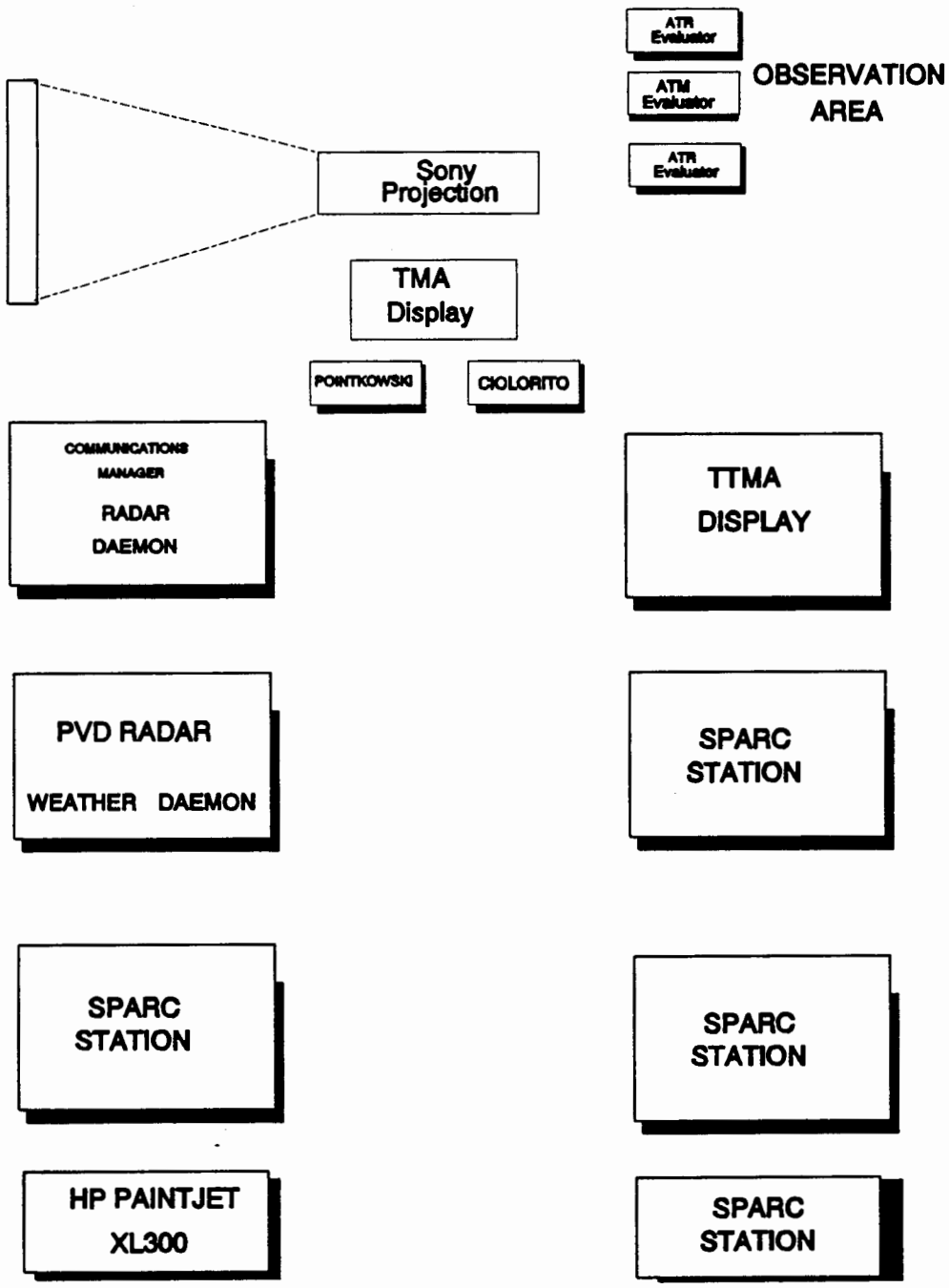

Figure 3.1-1 FAA Technical Center TMA Demonstration Laboratory

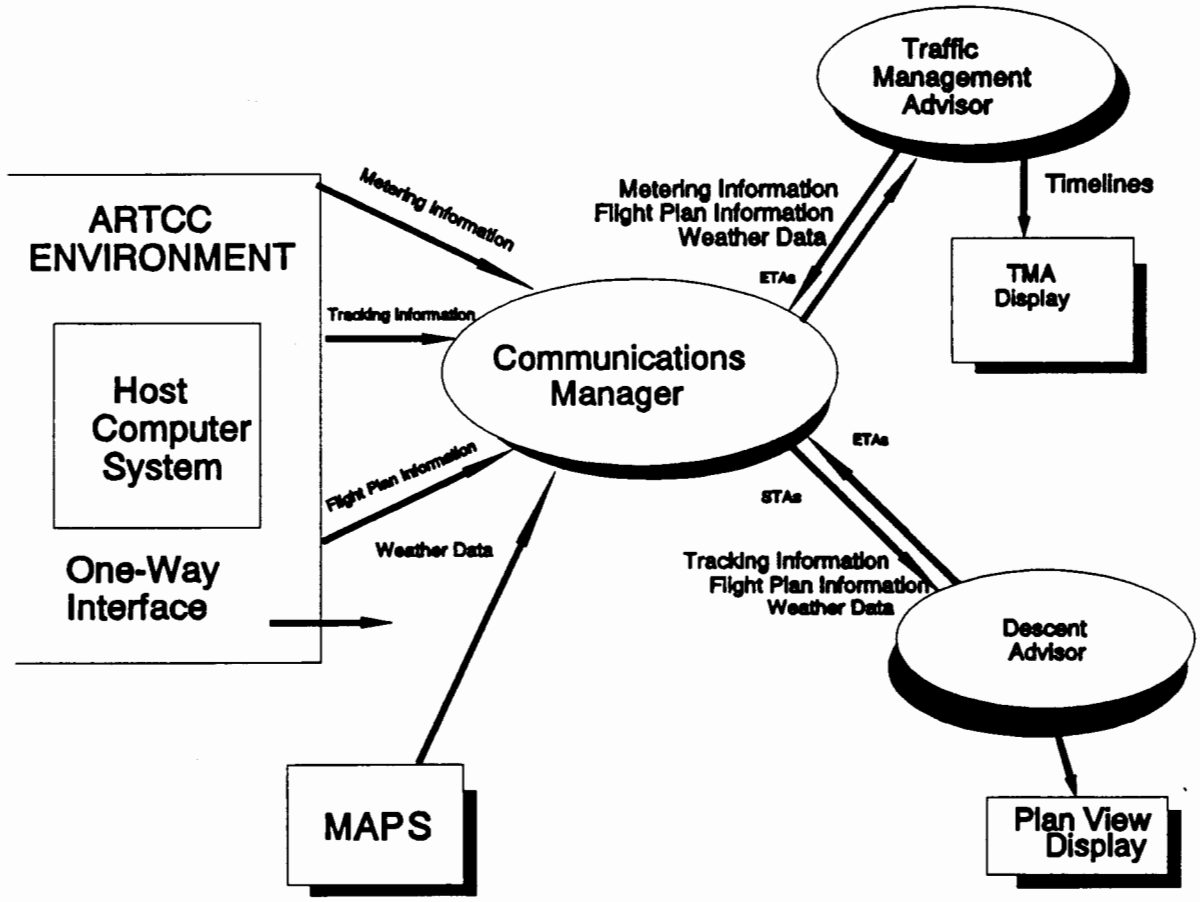

Figure 3.1-2 TMA Demonstration Software Configuration

3.2 HARDWARE CONFIGURATION

The hardware to be used to demonstrate the TMA at the FAA Technical Center is as follows:

a. SUN SPARCStations with color monitors which consists of:

1. one TMA Display workstation, a SONY Projection device will be used to project display presentation onto a large screen;
2. one PVD workstation (not a demonstrable component);
3. one TRACON TMA Display workstation; and,
4. one Communications Manager workstation (not a demonstrable component).

b. two Paradyne Model DL424 modems;
c. one Ethernet Local Area Network (LAN); and
d. SONY Projection device.

This hardware configuration is being used for convenience of the demonstration, e.g. slaving the Traffic Manager Display onto the large projection screen. The configuration is depicted in Figure 3.2-1. The PVD will be used to monitor live traffic in the Denver Center airspace.

The operational Denver Host hardware configuration will be employed. A Peripheral Adapter Module Replacement Item (PAMRI) General Purpose Output (GPO) port will be configured through adaptation to provide the physical interface to the TMA Demonstration System at the FAA Technical Center TATCA Laboratory. Figure 3.2-2 depicts the Denver Host and TMA interface. This configuration has been previously tested at the Denver Air Route Traffic Control Center (ARTCC) and the FAA Technical Center.

A TMA remote monitoring capability will be demonstrated. This capability will be useful in presenting Center TMA data to TRACON personnel during formal assessment at the Denver Center. The TRACON Traffic Management Advisor (TTMA) position at the TRACON will only be used for monitoring purposes during the formal assessment. Refer to Figure 3.1-1.

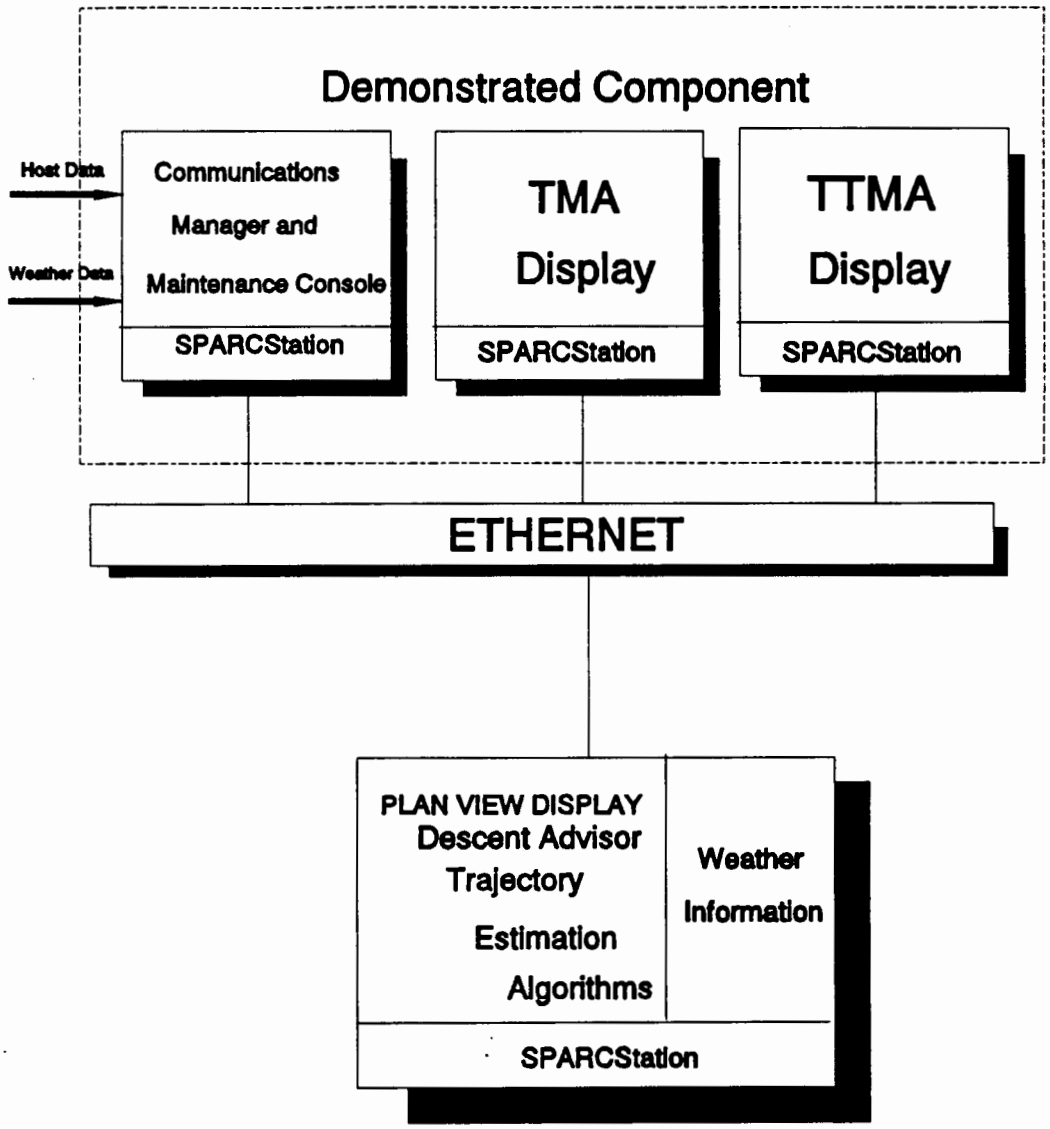

Figure 3.2-1 TMA Demonstration Hardware Configuration

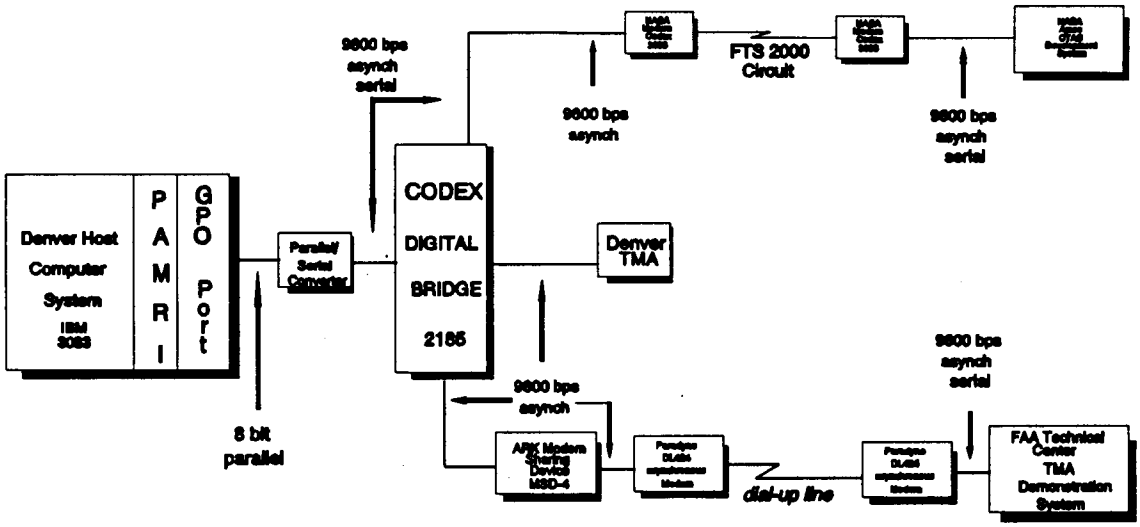

Figure 3.2-2 Host/TMA Interface

3.3 INTERFACES

3.3.1 Host Interface

A real-time interface with the Denver Host computer will be used for the TMA demonstration. This is a one-way interface from the Host to the TMA Demonstration System. The live data will also be recorded from the interface for play-back at a later time, if needed. Recorded data provides a backup in case interface problems are experienced during the demonstration.

An interface to the Host Computer System was developed to support CTAS testing at the NASA Ames Research Center [6]. New National Airspace System (NAS) messages were defined to provide data to the CTAS as follows:

a. the NASA Flight Plan Information (FN) Message;
b. the NASA Delete Flight Plan (DN) Message;
c. the NASA Proposed Flight Plan Information (PN) Message;
d. the NASA Tracking Information (TN) Message; and,
c. the NASA Metering Information (MN) Message.

Though originally developed for a specific purpose, these messages provide a generic interface to a Host computer system. The TMA Demonstration System located at the FAA Technical Center will receive and process the above Denver Center Host messages in real time.

3.3.2 Measure Scale Analysis and Prediction System (MAPS) Interface

A real-time interface with the MAPS will be used during the demonstration. The PVD atmospheric data profile window on the PVD will depict weather information from this interface. In addition, the DA requires this information for computation of ETAs (wind, pressure, and temperature data).

3.4 PERSONNEL RESOURCES

The TMA demonstration will involve exercising of TMA functions depicted in Section 5. Detailed procedures will be developed to demonstrate all TMA system components and functions not dependent on clearance modification. Demonstration results will be documented.

The FAA Technical Center, ACD-340, will conduct and supervise the TMA demonstration at the Technical Center. The FAA Air Traffic Service TATCA Associate Program Manager, ATR-300, or designated representative(s), will participate in the demonstration and will determine if the TMA system performed capabilities and functions satisfactorily.

4. CENTER HOST NON-INTERFERENCE DEMONSTRATION

One of the principle objectives of the FAA Technical Center TMA demonstration is to show that there is no adverse impact on the Center Host computer due to the TMA interface or TMA operation. This section describes the two major areas that will be demonstrated to show that this objective has been met.

4.1 PERFORMANCE

The purpose of this demonstration is to show that there is no adverse impact upon Center Host computer performance as a result of the TMA interface. The Host computer sends messages as appropriate to the TMA [6]. Some messages (the NASA Flight Plan Information, the NASA Flight Plan Deletion, the NASA Proposed Flight Plan Information, and the NASA Metering Information messages) are sent asynchronously to the TMA when the data becomes available. One message (the NASA Tracking Information message) is sent periodically (once every 12 seconds) to the TMA. A Host software modification has been developed and implemented as a patch to collect and transmit the above information at the appropriate times. The patch is installed at the Denver ARTCC.

The Host performance impact can be quantitatively assessed using available Host software tools that measure loading. (An existing NAS message will cause the display of Host Central Processing Unit (CPU) utilization in real time.) Loading will be measured when the TMA is both active and inactive, assuming that the measurements occur during statistically similar traffic periods. The TMA impact can then be estimated by examining the Host loading statistics for the two periods. Expected results will indicate no operational impact on the Host due to TMA operation.

4.2 FAILURE INDEPENDENCE

The purpose of this demonstration is to show that any problems experienced by the TMA will not affect a Host computer system. The Host/TMA link is one-way: information is sent from the Host to the TMA only.

Host failure independence will be demonstrated by disconnecting and re-connecting an active TMA demonstration system to the Denver Center Host Computer System. This may cause a TMA failure; however, this action will be shown to have no adverse impact on the Center Host computer system. Since the TMA is being demonstrated, and not being used operationally, TMA failure is acceptable during the demonstration.

4.3 CONTINUOUS OPERATIONS

The TMA software will be run for a continuous 24 hour period. This will demonstrate that the TMA will function at all levels of operational activity normally encountered at Denver Center. Arrangements will be made with the Denver Center TMU to coordinate operational configuration and runway changes as they occur at Denver Center so that the TMA Demonstration System at the FAA Technical Center reflects the actual operational configuration being employed. Traffic flow configurations will be validated every four hours to verify that the TMA Demonstration System conforms to the operational environment.

5. TMA FUNCTIONAL DEMONSTRATION

The following sections describe the major TMA functions that will be demonstrated at the FAA Technical Center. These include time-lines, operational configuration, and auxiliary displays. Live data will be used for demonstrating TMA functional capabilities. Statistics will be collected and printed for review during and after the demonstration.

5.1 TIME-LINES

The TMA presents metering data in a graphical time-line format. The time-line may show any combination of Planned Time of Arrivals (PTAs), the current ETAs, and the STAs as computed by the TMA scheduler for a given sequence of aircraft. The time-line extends upward with increasing future time or distance.

The time-line demonstration will show that the scheduled landing sequence is displayed in time-line format in a manner useful for the TMC. Also shown is the ability to configure the appearance of the time-lines and select scheduling algorithms based on the air traffic conditions. Additional TMA functions will also be demonstrated.

5.1.1 Configuration Set-Up

The time-line data will be presented in various formats, the scheduling window will be changed, and the algorithms used by the automatic and manual scheduling functions will be selected. Time-lines incorporate several features to present the data in different ways and to change system parameters. The appearance of the time-line and the time window in which the scheduling takes place are configurable parameters. The algorithms used to generate the STA list can be selected dynamically.

Function key-activated menus will be used to select various configurations of the time-lines and scheduling parameters. The configuration of the time-lines and the arrival times displayed will change according to the parameters selected.

5.1.1.1 Time-Line Appearance

The time-lines displayed on the TMA may be independently configured to display the desired combinations of arrival times.

The default format will show ETAs on the right of the time-line and STAs on the left. The time-line may be dynamically configured to display various combinations of PTAs, ETAs and STAs. The extent of the time-line into the future may be changed as well as the marked

time increments. Time-lines may be shown in distance format also. These parameters change the way the data is presented but do not affect the scheduling algorithms. The time-lines will re-display the data as instructed.

5.1.1.2 Schedule Window

The period during which aircraft are scheduled will be dynamically adjusted on the time-lines.

The scheduling window indicates the interval of time before landing when aircraft will be scheduled. It determines when an aircraft is first added to the list of aircraft being scheduled, based on the aircraft's ETA and current time. The two scheduling window delimiters, the freeze horizon and the scheduling horizon, may be changed dynamically.

The change of the scheduling window will be reflected in the time-lines and any aircraft falling within the new window will be automatically scheduled.

5.1.2 Automatic Scheduling

Arrival sequences for aircraft will be generated based on the aircraft's ETA in current time. The "automatic scheduling" feature is the processing basis for the time-lines.

The automatic scheduling function uses the ETAs of a given sequence of aircraft to generate an optimal arrival sequence, within the scheduling parameters, using the selected scheduling algorithm. The aircraft entering the scheduling window will be automatically scheduled and their STAs will appear on the time-lines.

5.1.2.1 Schedule Generation

A list of STAs will be generated for aircraft within scheduling windows. These STAs are generated within the constraints imposed by the scheduling algorithm. The STAs represent an optimal schedule and sequence to the runway threshold. The generated STAs will be displayed on the time-lines.

5.1.3 Manual Scheduling

The range of capabilities of the TMA to allow manipulation of the aircraft schedule will be shown. Individual landing slots may be reserved for various types of aircraft. A block of time may be entered during which no aircraft will be scheduled. Aircraft may be moved manually within the landing sequence and may be added to or deleted from the scheduling process. The above functions invoke the scheduling algorithms to reschedule, if necessary, affected aircraft. Aircraft that fall below the scheduling window are frozen; however, and

can only be rescheduled manually. The aircraft tags of the affected aircraft will be redisplayed when manual scheduling is performed.

5.1.3.1 Blocked Time Intervals

An interval will be blocked, prohibiting the scheduling of aircraft during the interval. Any aircraft currently scheduled to arrive during the interval will be rescheduled.

Blocked time intervals will be inserted and removed from the time-lines. Aircraft scheduled to arrive within the blocked interval and all subsequent aircraft will be rescheduled. The blocked interval will be displayed on the time-lines and the aircraft tags of the affected aircraft will be redisplayed.

5.1.3.2 Blocked Time Slots

A reserved slot for an individual aircraft will be inserted and removed from the time-line display and the scheduled aircraft list. Slots for different types of aircraft may be specified.

Aircraft scheduled to arrive within the blocked time slot and all subsequent aircraft will be rescheduled. The blocked time slot will be displayed on the time-lines and the aircraft tags of the affected aircraft will be redisplayed.

5.1.3.3 Reschedule Aircraft

An aircraft will be manually moved in the landing sequence, and the affected aircraft will be rescheduled. An aircraft may be moved without constraint. The manually scheduled aircraft tag will be displayed at the new position on the time-line with markings identifying it as such.

5.1.3.4 Suspend/Resume Scheduling Aircraft

An aircraft will be added to and removed from the scheduling process. All affected aircraft will be rescheduled and redisplayed.

Another manual scheduling feature is sequence alteration and blocking of aircraft. Aircraft may be switched in the scheduled landing sequence, and the STAs changed automatically for the affected aircraft.

5.1.3.5 Pop-ups

As long as a pop-up aircraft is designated as a Denver arrival, it will be scheduled and appropriately handled by the TMA during the demonstration.

5.1.4 Additional TMA Functions

Additional TMA enhancements will be shown during the demonstration. These functions were developed since the previous FAA Technical Center demonstration.

5.1.4.1 Traffic Count Overlay

This tool provides the TMC with a tabular list of expected arrivals, planned arrivals, and actual/scheduled feeder gate crossings for a prescribed interval of time. This data can be recorded throughout the day and printed in report format.

5.1.4.2 Rush Alert

Aircraft displayed on individual time-lines are scheduled using a predefined acceptance rate. The rush alert notifies the TMC when a push occurs within an interval of time and exceeds the acceptance rate.

5.1.4.3 National Airspace Performance Reporting System (NAPRS) Delay Reporting

Aircraft which fly through the Center's airspace may be delayed. This delay is recorded automatically in a printout format similar to the one used in the current manual recording method.

5.1.4.4 Feeder Airport Departure Release Time

Departure aircraft at satellite airports can be shown on satellite time-lines. A mechanism to schedule slots for proposed aircraft that have not yet departed satellite airports is provided.

5.2 OPERATIONAL CONFIGURATIONS

The TMA functions associated with airspace and/or runway configuration changes will be demonstrated. These functions include changing the airport acceptance rate, blocking time intervals at runways, and airspace configurations for changing traffic flows and sector combinations. Changing any of the above airspace configuration parameters will affect the scheduling algorithms and rescheduled aircraft STAs will be redisplayed.

5.2.1 Set Airport Acceptance Rate

The AAR will be adjusted. Aircraft will be automatically rescheduled according to the new airport acceptance rate and the new STAs will be displayed.

5.2.2 Runway Blocking

Blocked time intervals may be used to restrict traffic flow into a runway. Aircraft will be automatically rescheduled as required by the operational situation or configuration, and the new STAs will be displayed.

5.2.3 Gate Balancing

The gate balancing feature will allow the TMC to reschedule an aircraft to overfly a different metering gate from the previous one assigned. The demonstration will show that an aircraft will be removed from its ETA and STA time-line associated with its original gate designation and reappear on the appropriate ETA time-line at their new ETA. The term gate is synonymous with metering fix.

5.2.4 Airspace Configuration

Denver Center operational configurations will be demonstrated so that the TMA can be evaluated during a weather disturbance. Varied Denver sector configurations will be demonstrated to reflect airspace changes required for combining/decombining operational positions. Additionally, varied runway configuration changes will be demonstrated. Aircraft will automatically be rescheduled to reflect these changes.

5.3 AUXILIARY LOGICAL DISPLAYS

Other TMA display capabilities have been developed to include weather data, traffic situation, and traffic load graphs. All logical displays will be selectively presented on the

TMA workstation except the weather information which will be presented on the PVD workstation for convenience. The weather presentation allows the TMC to monitor wind speed, pressure, and temperature conditions of the Denver airspace. The situation display gives the TMC the capability of monitoring the Denver Center sector traffic. The traffic load graph display will show the number of aircraft in a specified block of time, either past or future, based on ETAs, STAs, Arrival Sequencing Program (ASP) time, average delays, flow rates, or aircraft types.

5.3.1 Weather Information

The weather information feature allows the TMC to monitor up-to-date wind speed, pressure, and temperature conditions for the Denver airspace. The atmospheric data profile window periodically shows interpolated wind speed, wind direction, pressure, and temperature at the airport at six different altitudes.

During the FAA Technical Center Functional and Non-Interference Demonstration real-time weather information will be utilized.

5.3.2 Situation Display

The situation display option of the TMA will allow the TMC to monitor Denver Center arrival traffic. The display can be windowed, dragged, expanded, and zoomed anywhere on the TMA display. The presentation of this display appears similar to data depicted on a PVD.

5.3.3 Traffic Load Graph Display

The traffic load graph display will allow the TMC to monitor predicted workload at the Denver Center in a specified block of time. The demonstration will show graphs past and/or future, based on ETAs, STAs, ASP times, average delays, flow rates, or aircraft types.

6. TMA NON-DEMONSTRABLE FUNCTIONS

Certain TMA functions require the issuance of air traffic control clearances to aircraft in order to show functional capability. Consequently, these functions will not be demonstrated at the FAA Technical Center nor assessed at the Denver Center. This section briefly describes these functions.

6.1 DESCENT ADVISOR DEPENDENT

The only TMA function that is DA-dependent and therefore not demonstrable is:

Expedite an aircraft. Land the selected aircraft as quickly as possible.

6.2 FINAL APPROACH SPACING TOOL DEPENDENT

In addition to being unable to issue operational clearances, this demonstration is limited to the center airspace environment. The TMA function described below is performed in the TRACON airspace and is dependent on the FAST.

Missed Approaches. Aircraft that miss their approach must be rescheduled within the TRACON airspace.

6.3 EXPEDITE DEPARTURE PATH DEPENDENT

This component will not be utilized or displayed during the FAA Technical Center demonstration.