CT
110
88
6

COPY 2

CT-110-88-6

AUG 26 Recd

TECHNICAL CENTER LIBRARY
ATLANTIC CITY, N.J. 08405

TEST PLAN FOR THE EVALUATION OF ENHANCEMENTS TO THE LOW LEVEL WIND SHEAR ALERT SYSTEM (LLWAS) AT STAPLETON INTERNATIONAL AIRPORT

Prepared By

The LLWAS Program Staff
FAA Technical Center
Atlantic City Airport, N.J.

Submitted By

Paul J. O'Brien
FAATC LLWAS Program Manager, ACT-110

July 1987

Approved By

Dan Rebhun 7/22/87

Dan Rebhun, APM-650 Date
FAA LLWAS Program Manager

TABLE OF CONTENTS

	Page
INTRODUCTION	1
Purpose	1
Objectives	1
System Modifications	1
DISCUSSION	2
The Denver, Colorado Test Bed	2
The Air Traffic Control Tower Meteorologist	5
The Radar Site Meteorologist	5
Technical Approach	7
Scoring Procedures	8
Project Responsibilities	9

APPENDICES

A - System Description of the Denver Stapleton LLWAS

B - Denver Tower Human Factors Evaluation Briefing Procedures and Exhibits of the Local Controller Questionnaire Forms to be Used

C - Exhibit of the ATC Tower Meteorologist LLWAS Advisory Two Page Worksheet

D - Exhibits of the Radar Site Meteorologist LLWAS Advisory Worksheet, Radar Event Log and Locator Chart Forms

E - Exhibit of the NCAR Pilot Questionnaire

LIST OF ILLUSTRATIONS

Figure		Page
1	LLWAS Remote Station Sites at Denver, Colorado Test Bed	3
2	Denver Stapleton Airport Test Bed	4
3	Milestone Event Schedule	10

LIST OF TABLES

Table		
1	Shift Rotation Schedule - Participants Performing ATC Tower/Radar Meteorologist Functions	6

INTRODUCTION

PURPOSE.

The purpose of this test plan is to describe the procedural approach and analytical methods to be employed in the conduct of the test and evaluation of potential enhancements to the Low Level Wind Shear Alert System (LLWAS) at Stapleton International Airport, Denver, Colorado.

OBJECTIVES.

1. Determine the effectiveness of a wind shear detection algorithm in establishing the presence of hazardous wind shears near the airport.

2. Determine the effectiveness of a wind shear detection algorithm in reducing the false alarm rate.

3. Determine the effectiveness of a microburst detection algorithm in detecting the presence of hazardous microbursts near the airport.

4. Determine the false alarm rate associated with the microburst detection algorithm.

5. Determine the effectiveness of runway component algorithms in estimating the shear along the runway during hazardous shear events near the airport.

6. Evaluate the usefulness and effectiveness of the display message format and the air traffic controller's message to pilots.

7. Obtain reactions of local air traffic controllers to cathode ray tube (CRT) displays. Results will be used as inputs to human factors studies as well as follow-on display design.

8. Prepare and submit an interim report by October 15, 1987, containing conclusions and recommendations for consideration by the Deployment Readiness Review Committee.

SYSTEM MODIFICATIONS.

Modifications to be implemented for the test and evaluation at Denver are:

1. A master station consisting of a DEC PDP-11/73 computer with 1 Megabyte (MB) of RAM, a Winchester RD53 71MB hard disk drive, a TK50 cartridge tape drive (95MB capacity per reel), and a real time clock. The new master station was needed because of the greater complexity in the calculations to be performed and the need for more memory to store and operate the program.

2. Two commercial quality, office type cathode ray tube (CRT) displays initially will be used as local controller displays. These CRT displays will contain lightly-etched faceplates, no integral bonded safety panel, and temporary modifications to allow operator adjustment of contrast and brightness. Designated as VT-240's, they are manufactured by the Digital Equipment Corporation. The VT-240 is considered to be advantageous in that a change in the display format can be made through software if needed.

3. Three special purpose algorithms including a more complex wind shear microburst detection (WSMD) algorithm as a replacement for the currently used centerfield average (CFA) algorithm. The WSMD algorithm affords the dual capability for detecting wind shear and confirming the event as a microburst. (The CFA algorithm lacks the ability to distinguish between types of wind shear, e.g., it cannot identify a microburst.) The two other special purpose algorithms are a runway oriented loss (ROL) algorithm and a runway oriented gain (ROG) algorithm. The purpose of the ROL algorithm is to furnish data as to wind speed loss along each affected runway during microburst events. The purpose of the ROG algorithm is to provide information relative to wind speed gain along a runway when there is a wind shear alarm but no microburst alarm associated with the runway.

DISCUSSION

THE DENVER, COLORADO TEST BED.

The test bed at the Denver, Colorado Stapleton Airport was established in 1985 as part of a continuing program to study low altitude wind shear events. More recently, the test bed has been expanded through the addition of weather data gathering facilities by the Massachusetts Institute of Technology (MIT) Lincoln Laboratory and the National Center for Atmospheric Research (NCAR). Lincoln Laboratory and NCAR, in support of the FAA program, are conducting experimental measurements using Doppler weather radars, a system of automatic weather stations and instrumented aircraft to obtain detailed information from storms occurring in the Stapleton airport area. The test bed for the evaluation will have the capability of providing data from five types of source facilities including LLWAS. The others are three Doppler radars and a network of FAA/Lincoln Laboratory Operational Weather Studies (FLOWS) automatic weather stations.

Figure 1 shows the 12 LLWAS remote station (sensor) sites and their respective locations in relation to the four primary runways at the Denver Airport; namely, two north/south runways (35/17) and two east/west runways (8/26). The LLWAS anemometer sensor at station 0 is referred to as the centerfield (CF) sensor; all others as boundary remote sensors. Pertinent data from LLWAS consists of remote station windspeed and direction applied as input to the PDP 11/73, and output data to controller displays in a runway oriented windshear and microburst alert format. A detailed description of LLWAS is provided in Appendix A.

Figure 2 shows the locations of the various systems and equipment items being used at the Denver test bed. FL-2 shown in the figure is a state-of-the-art Doppler weather radar built and operated by Lincoln Laboratory and uses a 28-ft diameter antenna in acquiring data. FL-2 is located at the Buckley Air National Guard Base and distance-wise is approximately 15 kilometers (km) from the mid-point of the airport's north/south runways.
A second Doppler weather radar, identified as UND in the figure, is operated by the University of North Dakota. This system is somewhat smaller, having a 12-ft. diameter antenna. The FL-2 and UND radar beams are at right angles to one another. The right angle beam configuration will provide very good dual doppler case studies of microburst events occurring in the airport environment.

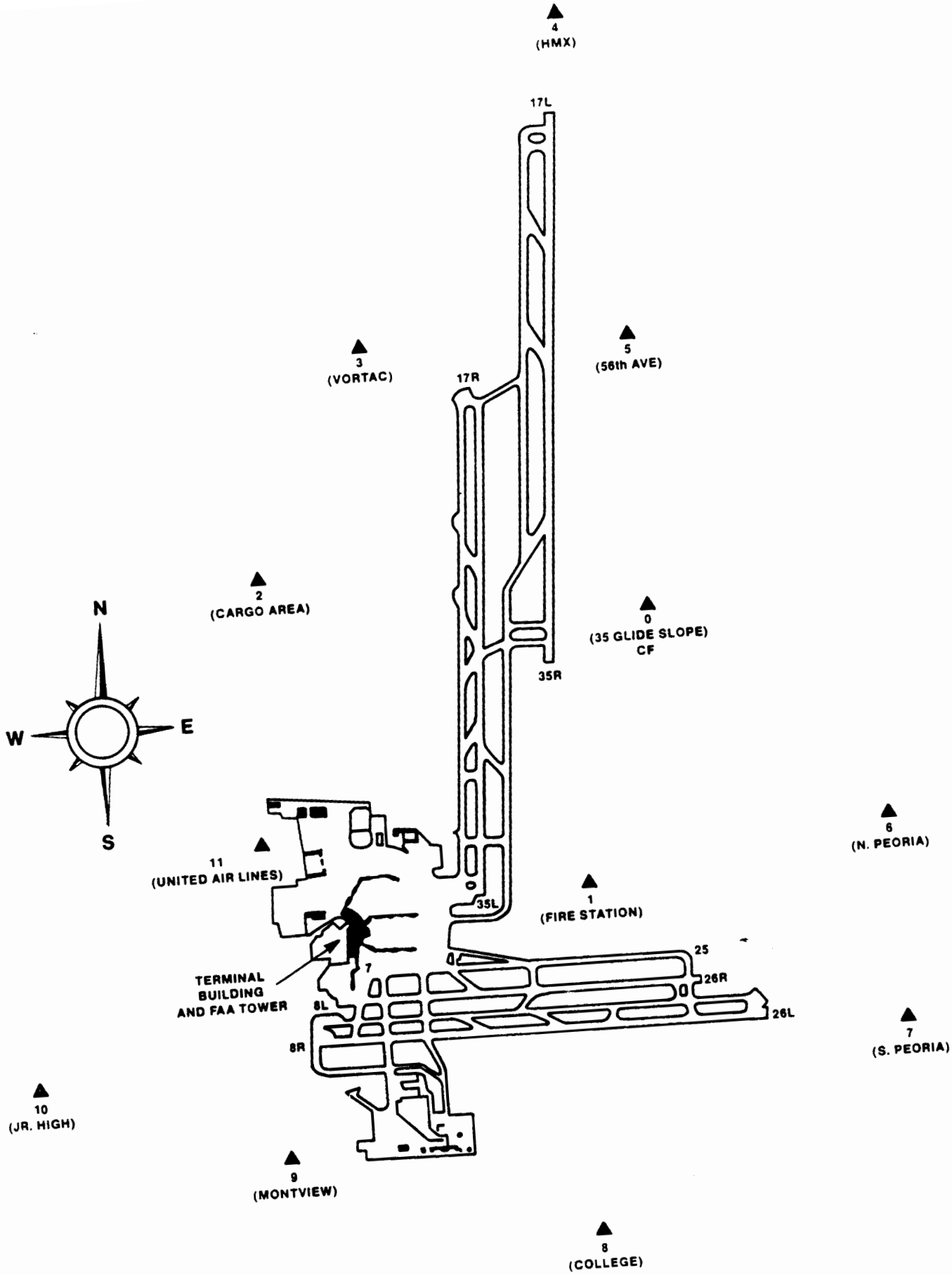

FIGURE 1 - LLWAS REMOTE STATION SITES AT DENVER, COLORADO TEST BED

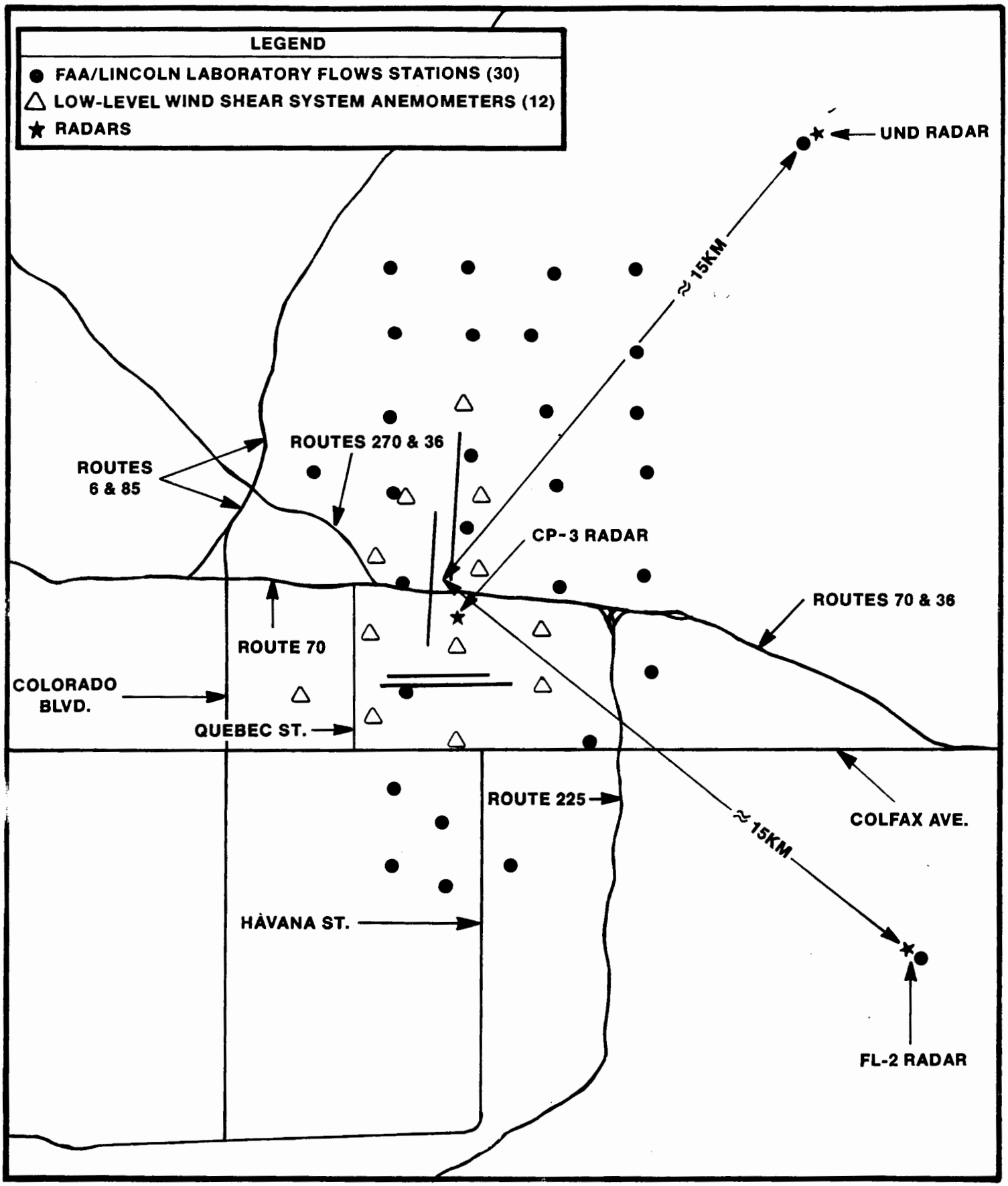

FIGURE 2 - DENVER STAPLETON AIRPORT TEST BED

A third Doppler weather radar, identified as CP-3 in the figure, is operated by NCAR. Its characteristics are comparable to the UND radar. The CP-3 radar will provide good case studies of velocity data for the Stapleton north/south runways.

A network of 30 FLOWS automatic weather stations will be collecting data on wind speed, wind direction, rainfall, temperature, humidity, and pressure. The wind data from these PAM stations is to be used to validate the wind shear detection performance of the Doppler radars. The other types of PAM station data are to be used for meteorological analysis of wind shear events.

THE AIR TRAFFIC CONTROL TOWER METEOROLOGISTS.

Two meteorologists will be stationed at the ATC tower at Stapleton Airport. One will be provided by the FAATC, the other by the NCAR. They will monitor controller-pilot communications, observe weather conditions on the airport, and monitor LLWAS displays.

At any one time, there are two local controllers on duty in the Stapleton ATC tower. One handles arriving aircraft; the other departing aircraft. One of the meteorologists will monitor the LLWAS display and radio frequency for arrivals; the other will monitor the LLWAS display and frequency for departures. They will not communicate with either controller during the test and evaluation.

The meteorologists will record information pertinent to LLWAS wind shear and microburst alarms on a worksheet similar to the one shown in figures C-1 and C-2 of Appendix C. The meteorologists will note whether the alarm is false by visual observation of the weather over the runways. They will also note whether the local controller issued an advisory to approaching or departing aircraft, or ignored the alarm either because it was obvious that a shear condition did not exist or there were not any aircraft to advise.

Six FAATC meteorologists will participate in the capacity of ATC tower meteorologists during the operational test. A shift rotation schedule appears in Table 1.

THE RADAR SITE METEOROLOGIST.

A meteorologist will be stationed at the Lincoln Laboratory weather radar site. His functions will be to observe and log all shear events detected within 5 miles of the Stapleton Airport. At his disposal will be displays of real-time velocity and reflectivity data from the FL-2 Doppler radar along with displays of real-time LLWAS information identical to that provided to controllers at the ATC tower.

For each wind shear or microburst event detected by the LLWAS, the radar, or both the LLWAS and radar, the meteorologist will enter information pertinent to that event on an LLWAS worksheet and a radar event log. Exhibits of the forms to be used are shown in Appendix Figures D-1 and D-2. On the radar event log form, he will record information regarding event location, affected runways, and if a microburst, the velocity differential (V) between approaching and receding centers and the distance between these centers for each tilt in which an event is detected.

The radar site meteorologist will note if the radar information confirms the LLWAS wind shear and microburst alarms. In addition, he will note delays in detection by either the LLWAS or the radar system as well as the loss of detection by one system while the other continues to detect the phenomenon.

In addition to the displays of real-time velocity and reflectivity, Lincoln Laboratory will superimpose on the velocity display the locations of detected microbursts (using rectangles) and gust fronts (using curves). This information is provided by automated gust front and microburst detection algorithms applied to the radar data in real-time. The radar site meteorologist will record detections by these radar algorithms on the worksheet.

A locator chart showing the Stapleton airport runway layout appears in Appendix Figure D-3. The chart is divided into six sections. The meteorologist will indicate on the chart the appropriate section in which the radar detected the event.

Six meteorologists will participate as radar site meteorologists during the operational test. The shift rotation schedule is shown in Table 1.

TABLE 1. SHIFT ROTATION SCHEDULE - PARTICIPANTS PERFORMING ATC TOWER/RADAR SITE METEOROLOGIST FUNCTIONS

Test and Evaluation Timeframe	ATC Tower Meteorologist Designator	Radar Site Meteorologist Designator
Sat. 7/31 - Fri. 8/6	2	1
Fri. 8/6 - Thurs. 8/12	3	5
Thurs. 8/12 - Wed. 8/18	4	6
Wed. 8/18 - Tues. 8/24	1	2
Tues. 8/24 - Mon. 8/30	5	3
Mon. 8/30 - Sat. 9/5	6	4

TECHNICAL APPROACH.

In this section the actions to be taken and resources required by the FAA Technical Center in meeting each of the objectives of the test and evaluation are listed.

Each numbered item in this section corresponds to an objective with the same number in the sequential listing of objectives.

1. The effectiveness of the wind shear detection algorithm in detecting wind shear events will be determined by correlating algorithm results with wind shear detections by other sensors in the test bed and with pilot reports of their encounters with wind shear. The sensors to be used in meeting this objective are the three Doppler radars (FL-2, UND, and CP-3), the mesonet stations in the immediate airport area, and the LLWAS. Single- and dual-Doppler radar data are required. There will be sources of information from pilots: voice tapes and a questionnaire distributed to pilots by NCAR. An exhibit of this pilot questionnaire appears in Appendix E.

The effectiveness of the 12-station wind shear detection algorithm to provide an improvement in detection of wind shear events over the detection capability of the 6-station CFA algorithm will be determined by correlating wind shear results of a Denver data base first applied to 6-stations, then applied to 12-stations.

2. The effectiveness of the wind shear detection algorithm in providing an acceptably low false alarm rate will be determined by correlating algorithm results with wind shear detections by the three Doppler radars, the mesonet stations, and the LLWAS, as well as observations by the tower and radar site meteorologists, voice tapes, and pilot questionnaires are required to meet this objective.

The effectiveness of the 12-station wind shear detection algorithm to reduce false alarms as compared to the 6-station CFA algorithm will be determined by correlating total numbers and categories of alarms with the same data base used similarly for objective number 1.

3. The effectiveness of the microburst detection algorithm in identifying a wind shear event as a microburst will be determined by correlating algorithm results with detections by the other sensors in the test bed. Data from the Doppler radars, the mesonet stations, and the LLWAS are required to meet this objective.

4. The effectiveness of the microburst detection algorithm in providing an acceptably low false alarm rate will be determined by correlating algorithm results with wind shear detections by the three Doppler radars, the mesonet stations, and the LLWAS, as well as observations by the tower and radar site meteorologists, air traffic voice tapes, and pilot questionnaires are required to meet this objective.

5. The effectiveness of the runway component algorithms in providing an accurate computation of gain in headwind during a wind shear event or loss in headwind during a microburst event along the runway will be determined by

comparison of these computations with runway shear estimates from single- and dual-Doppler radar data. Dual-Doppler radar data from FL-2 and UND, as well as single-Doppler radar data from CP-3 are required to meet this objective.

6. The evaluation of the usefulness and effectiveness of the display message format and the air traffic controller's (ATC's) message to pilots will be accomplished by means of the questionnaire data collection instruments shown in Appendix B. Form A will be administered to the ATC's prior to installation of the modified LLWAS. Form B will be administered three times after its installation. The first administration will be one week after installation, the second at about halfway through the test period (or after any significant changes in the test configuration) and the third at the end of the test period.

Numerical values will be assigned to responses to the questions and then analyzed using robust statistics. Histograms and other descriptive statistics will be computed. The questions will be subjected to the nonparametric binomial sign test to determine if there is a statistically significant agreement among the respondents.

Narrative answers will be input into a computer data base and categorized. Counts of answers falling into similar categories will be made.

7. The reactions of local ATCs to cathode ray tube (CRT) displays will be obtained by means of the questionnaire data collection instruments shown in Appendix B. The procedural approvals for administering questionnaire forms A and B and the statistical methods applied to the data will be the same as technical approach response number 6.

8. An interim report, providing conclusions and recommendations based on the analysis of the data results and findings of the test and evaluation, will be submitted by October 16, 1987, (per schedule) for inclusion in the Deployment Readiness Review document.

The interim report will provide preliminary findings pertinent to each of the other objectives.

SCORING PROCEDURES.

A meeting was held on July 9, 1987 at the Buckley Air National Guard TDWR Site in Denver for purposes of establishing a set of ground rules and procedures for scoring of the performance effectiveness of the LLWAS wind shear detection algorithms. Attendees consisted of the FAA LLWAS Program Manager, the FAA Technical Center LLWAS Program Manager, and representatives from M.I.T.'s Lincoln Laboratory, NCAR, and the Martin Marietta Corp.

As a basis for determining the accuracy of the wind shear detection algorithms, data will be collected from a number of sources, then analyzed and compared. These sources of data consist of:

Observations made by meteorologists in the tower
Logs from the TDWR site: NCAR/LL/FAATC
Pilot reports (PIREPS)

Pilot questionnaires
Single-Doppler ground truth analysis from FL-2 radar
Single-Doppler ground truth analysis from CP-3 radar
Selected dual-Doppler analysis from FL-2 and UND radars
FAA - Lincoln Laboratory mesonet data

In the comparison of data between data sources, the likelihood exists of contradictory and inconsistent results because no reference exists. Each of the three radars is developmental and the portable mesonet has no prior history in the Denver test bed. The evidence, therefore, must be weighed and conclusions reached as to the best determination. Contradictory and inconsistent results will be assessed collectively by the principal organizations participating in the test and evaluation. The following characteristics of each wind shear event will be determined:

Nature of the event (microburst, wind shear line, other)
Location, size and direction (if applicable) of the event
Duration of the event (Start and stop times limited by measurement device tolerances approximating 30 seconds)
Intensity of the event
Magnitude of runway component

The statistical measures for scoring will include the following:

Probability of detection
Probability of false detection during clear periods
Probability of false alarm
Probability of timely detection

The difficulties to be expected with the scoring procedures will include instances of sheltering, equipment problems and communication errors.

PROJECT RESPONSIBILITIES.

The principle organizations which will be participating in the test and evaluation of the Denver Stapleton Enhanced LLWAS include: (a) the FAA Technical Center (FAATC); (b) the system engineering and integration contractor (SEIC) to the FAA - the Martin Marietta Corp.; (c) the MIT Lincoln Laboratory (LL); and (d) the National Center for Atmospheric Research (NCAR). The FAATC has the overall responsibility for the conduct and coordination of the test and evaluation. Specific responsibilities of each of the aforementioned organizations are listed in order below. Thereafter, responsibilities are listed for two FAA organizational units at Denver, Colorado who will be providing support type functions; namely: DEN-30 and AFSFO-1.

A milestone event schedule is provided in Figure 3. This schedule illustrates the major milestone events for associated functions of the principle organizations over the time span of the project. Double milestones on event schedules refer to requirements needed for both the interim and final reports.

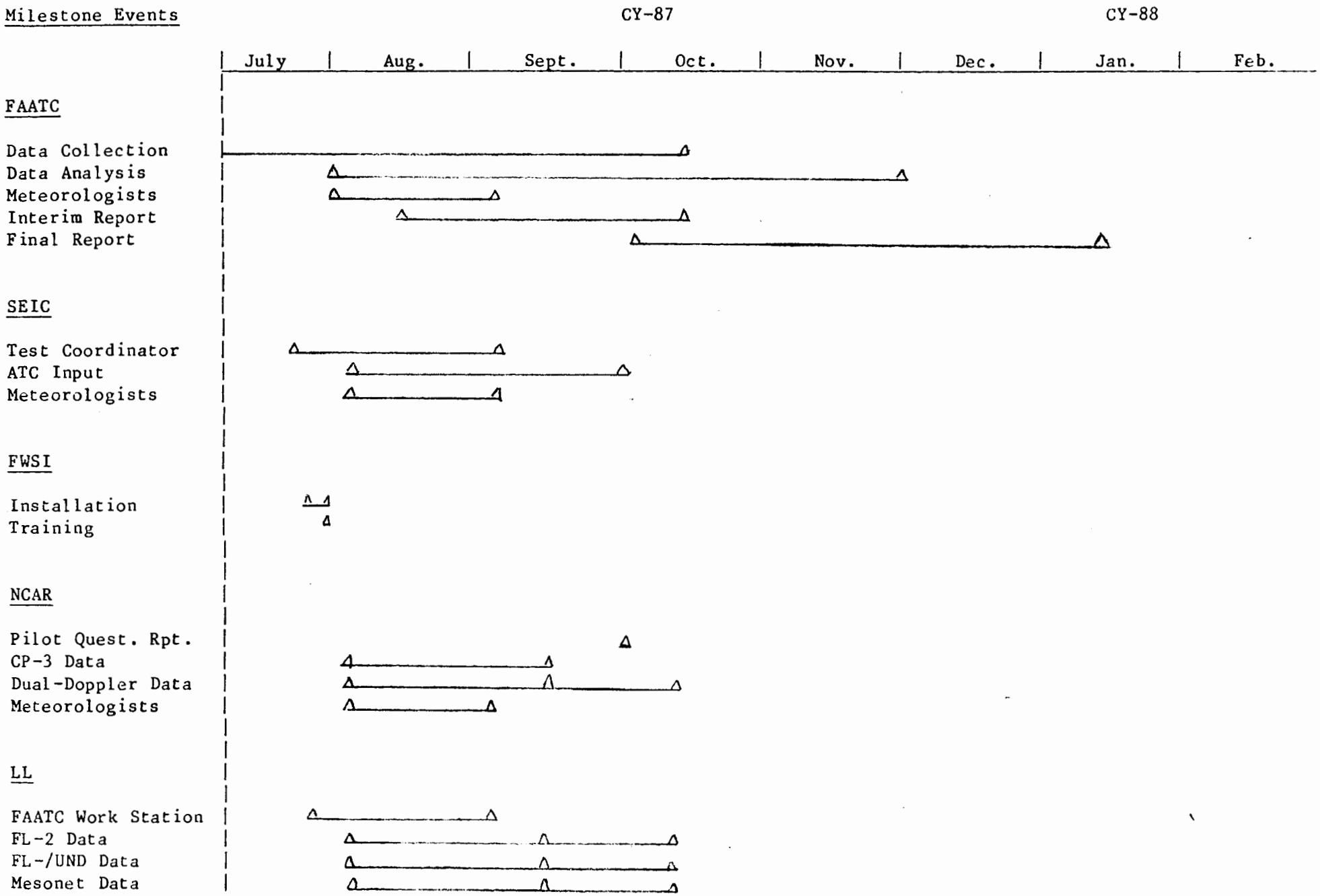

FIGURE 3. MILESTONE EVENT SCHEDULE

1. FAATC

a. Provide two meteorologists to act as test participants in the ATC tower cab and the Terminal Doppler Weather Radar (TDWR) site.

b. Collect all pertinent LLWAS data (all unprocessed sensor and tower display data) and all available test bed source data.

c. Analyze LLWAS and all other test bed source data.

d. Prepare a project interim report by October 15, 1987. This report is to be a preliminary assessment of each of the eight objectives listed in the technical approach.

e. Prepare a project final report by January, 1988.

2. SEIC, Martin Marietta

a. Provide a test coordinator who will be responsible for day-to-day logistics, scheduling and coordination between FAATC, NCAR, LL, Air Traffic (AT), Airway Facilities (AF) and other offices and agencies as required.

b. Provide four meteorologists for shift rotation functions as test participants in the ATC tower cab and at the TDWR site.

c. Collect all ATC tower voice tape recordings and prepare chronological listings of all eligible wind shear events. Forward these data to the FAATC for analysis by September 30, 1987.

d. Collect completed worksheets and logs from:

(1) NCAR, SEIC and the FAATC for their respective ATC tower meteorologist test participants.

(2) SEIC and the FAATC for their respective TDWR site meteorologist test participants. Collect local controller completed questionnaires. Forward all related data collection forms to the FAATC for analysis by September 30, 1987.

e. Prepare operations analysis from the tower voice tapes for both the interim and final reports.

3. Lincoln Laboratory

a. Provide an FAATC work station in the LL trailer at the TDWR site. The work station is to be comprised of two DEC monitors, model VT-240, and a Videotek color monitor, model CD-19HR. The CD-19HR color monitor shall have the capability to display either velocity or reflectivity data.

b. Forward to the FAATC by September 30, 1987 the following data on 9-track tape, 1600 bits per inch (BPI) in accordance with the format specified:

(1) Examples of both FL-2 and UND Doppler radar wind shear events in Universal Format.

(2) A minimum of five FL-2/UND dual-Doppler wind shear events in Cartesian Exchange Format. Event selections are to be coordinated with NCAR to eliminate possible duplication of events.

(3) Examples of FLOWS Mesonet wind shear events in Common Instrument Data Format.

c. Complete the forwarding of all requested wind shear events to the FAATC by October 15, 1987.

4. National Center for Atmospheric Research (NCAR)

a. Provide meteorologists for shift rotation functions as test participants in the ATC tower cab.

b. Forward to the FAATC by September 30, 1987, the following information:

(1) interim results of pilot questionnaire studies pertaining to the test objectives; (2) copies of all questionnaires received to verify occurrences of wind shear and microburst events; (3) examples of CP-3 single-Doppler radar wind shear events. These data are to be provided on 9-track tape, 1600 BPI in Universal format; and (4) a minimum of five examples of FL-2/UND dual-Doppler wind shear events. These data are to be provided on 9-track tape, 1600 BPI in Cartesian Exchange format. Selection of events will be coordinated with LL to eliminate possible duplication of events.

c. Complete the forwarding of all requested wind shear events to the FAATC by October 15, 1987.

5. Planning and Procedures, AT, Denver, CO (DEN-30)

Provide ATC tower supervisor and controller participants for the human factors evaluation of LLWAS local controller displays.

6. Airways Facilities Sector Field Office, Denver, CO (AFSFO-1)

a. Provide work space in the equipment room for the test coordinator.

b. Install headset jacks at the ATC tower cab meteorologist positions for reception of both arrival and departure radio frequencies.

c. Install two 4-circuit telephone cables from FAATC furnished modems to the ATC Tower telephone company mainframe.

d. Install signal lines between the ATC tower cab and the equipment room as specified by Fairchild Weston Systems, Inc.

APPENDIX A

SYSTEM DESCRIPTION OF THE DENVER STAPLETON LLWAS

LIST OF ILLUSTRATIONS

Figure		Page
A-1	LLWAS Functional Relationship of Units	A-3
A-2	Typical LLWAS	A-4
A-3	Denver Stapleton Microburst Detection Triangles	A-6

The LLWAS is a real-time, computer controlled, electro-mechanical data acquisition, analysis and display system installed at major airports. Its primary function is to serve as a detection and warning device for alerting controllers and pilots of the presence of thunderstorm induced wind shears in the vicinity of airport runways.

The LLWAS installed at the Denver Stapleton Airport gathers wind speed and wind direction data from twelve geographic areas of the airport. It compares the wind speed and direction of each wind collecting boundary remote station to the two-minute average of a centerfield remote station. The eleven boundary remote stations are strategically placed in proximity to approach and takeoff areas of the various runways while the centerfield remote station is located in the middle of the airport.

The Denver LLWAS was procured from Fairchild Weston Systems Incorporated (FWSI), Sarasota, Florida. Equipment items comprising this FWSI LLWAS include:

1. Twelve remote stations for gathering wind data. Each remote station consists of an anemometer, status/controller, analog/digital converter, a transceiver with modem, an antenna, and a power supply with an uninterruptible power system.

2. A master station consisting of a Digital Equipment Corporation (DEC) PDP-11/23 computer with 512 Kilobytes of Random Access Memory (RAM), two DEC RL02 hard disk drives with 10.4 Megabytes (MB), a Cipher Model 100 tape drive, a transceiver with modem, an antenna, and a power supply.

3. Seven displays, including two local controller displays (LCDs), four centerfield wind displays (CWD), and one Maintenance Terminal display.

The following subparagraphs provide a functional description of the LLWAS.

Remote Stations. At the remote stations, each of the anemometers continuously generates three analog signals. Two of the analog signals represent the vector components needed by LLWAS to compute wind direction and wind speed. The third signal is tachometer wind speed which is only used at the centerfield remote station for wind gust. The remote station converts these analog signals to digital, arranges the data in a specific message format and, when interrogated by the Master Control Unit, transmits the message.

Master Control Unit. The Master Control Unit is the nerve center of the LLWAS. It controls the timing of all transmissions. Approximately once every seven seconds, the PDP-11/23 computer of the Master Control Unit polls each remote station and stores the data in memory. Additionally, the PDP-11/23 carries out final formatting of wind data for the displays, performs system checks and stores data to the hard disk drive. The tape drive is used to back up data off the hard disk drive so that data can be later processed at the FAA Technical Center.

Displays. Each of the two local controller displays provides the controllers with continuously updated data as to centerfield wind direction, wind speed, wind gust (when gusts occur), and the occurrences of wind shear

alarms. The CWD provides data as to centerfield wind speed, direction, and gust. The maintenance terminal display enables status monitoring of system performance as well as a means for controlling the loading of the system program and diagnostics.

The functional relationship of the individual LLWAS units and ancillary equipment items is illustrated in figure A-1. A geographical depiction of a typical six station LLWAS, as exists at all 110 airports in the United States except for Denver and New Orleans, is shown in figure A-2.

Algorithms. The algorithm currently used with the Denver Stapleton LLWAS for detecting wind shear is known as the centerfield average (CFA) algorithm. Approximately once every seven second (sec) polling cycle, a 30 sec average of measurements from each remote is obtained and compared with a two minute (min) running average of measurements at centerfield. If the magnitude of the vector difference between the average at centerfield and the average at a remote is in excess of 15 knots (kt), a wind shear exists and the LLWAS alarms.

Laboratory evaluations of the CFA algorithm at the Federal Aviation Administration Technical Center (FAATC) have shown that the CFA does not perform as well as other algorithms (e.g., the Airport Area Average algorithm) for detecting wind shear. Moreover, the CFA algorithm lacks the ability to distinguish between types of wind shear, e.g., it cannot identify a microburst.

The CFA algorithm will be replaced for the field evaluation with a more complex wind shear microburst detection (WSMD) algorithm. The intent of this algorithm is to afford the dual capability for detecting wind shear as well as confirm the event as a microburst. Other proposed software will consist of a runway oriented loss (ROL) algorithm and a runway oriented gain (ROG) algorithm. The purpose of the ROL algorithm is to furnish data as to wind speed loss along each affected runway during microburst events. The purpose of the ROG algorithm is to provide information relative to wind speed gain along a runway when there is a wind shear alarm but no microburst alarm associated with the runway.

The WSMD algorithm consists of three procedures which are executed for each polling cycle. The first is the temporal shear detection (TSD) procedure. It monitors temporal changes in wind measurement at each individual station. The TSD procedure affects the issuance of a wind shear alarm or microburst alarm as follows: If there is slight temporal shear, then the threshold is increased, making the issuance of an alarm more difficult. If there is moderate temporal shear, the threshold is not changed. If there is significant increase in temporal shear, then the threshold is decreased, facilitating the issuance of an alarm.

The second procedure is the wind shear detection (WSD) procedure. In the WSD procedure the vector difference between a spatial average of the sensor network mean and each individual sensor is computed and compared with a chi-squared threshold. (The spatial average may or may not include a contribution from each sensor because statistical outliers are removed.) If the vector difference exceeds the chi-squared threshold, an alarm is issued.

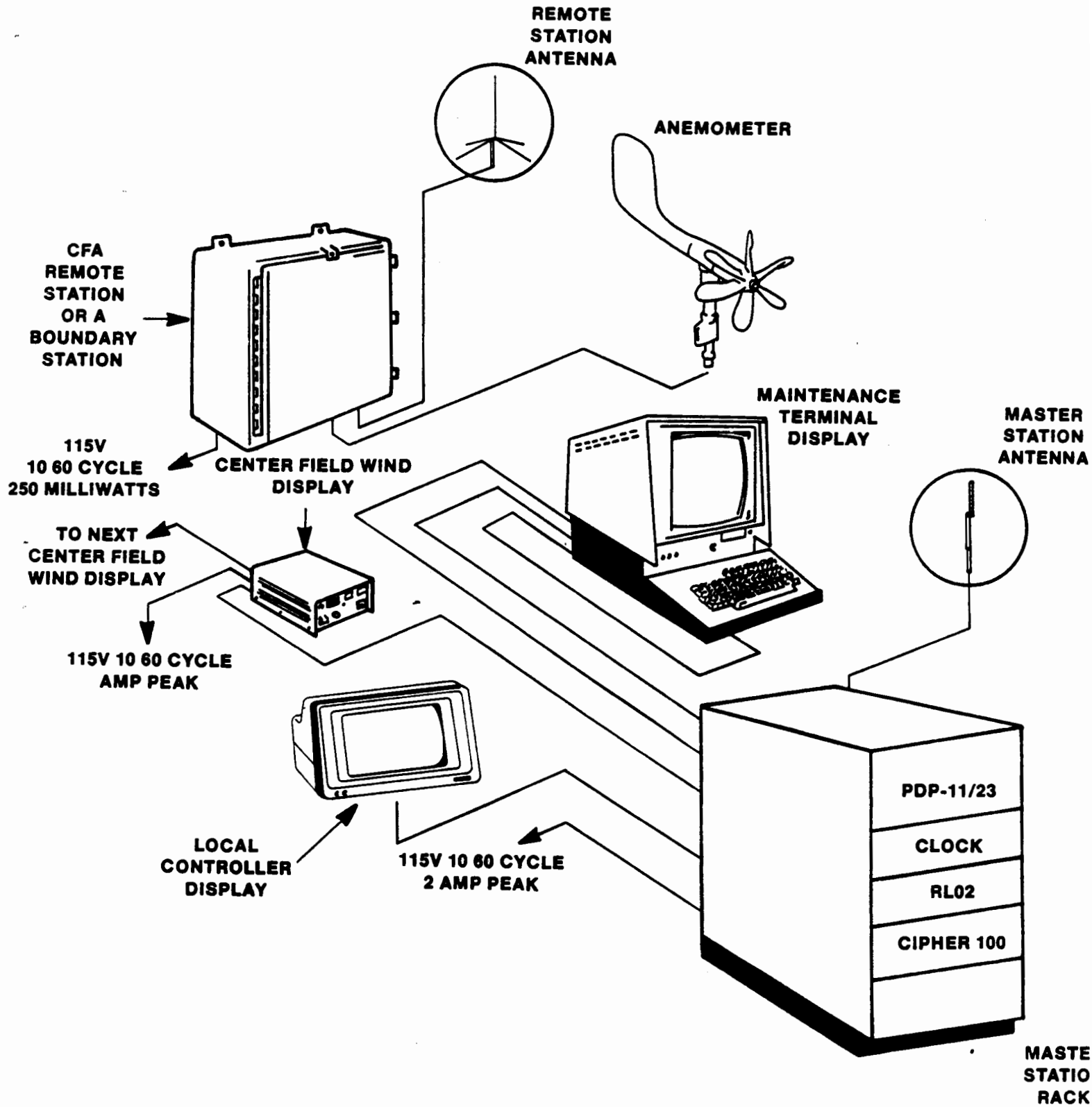

FIGURE A-1. LLWAS FUNCTIONAL RELATIONSHIP OF UNITS

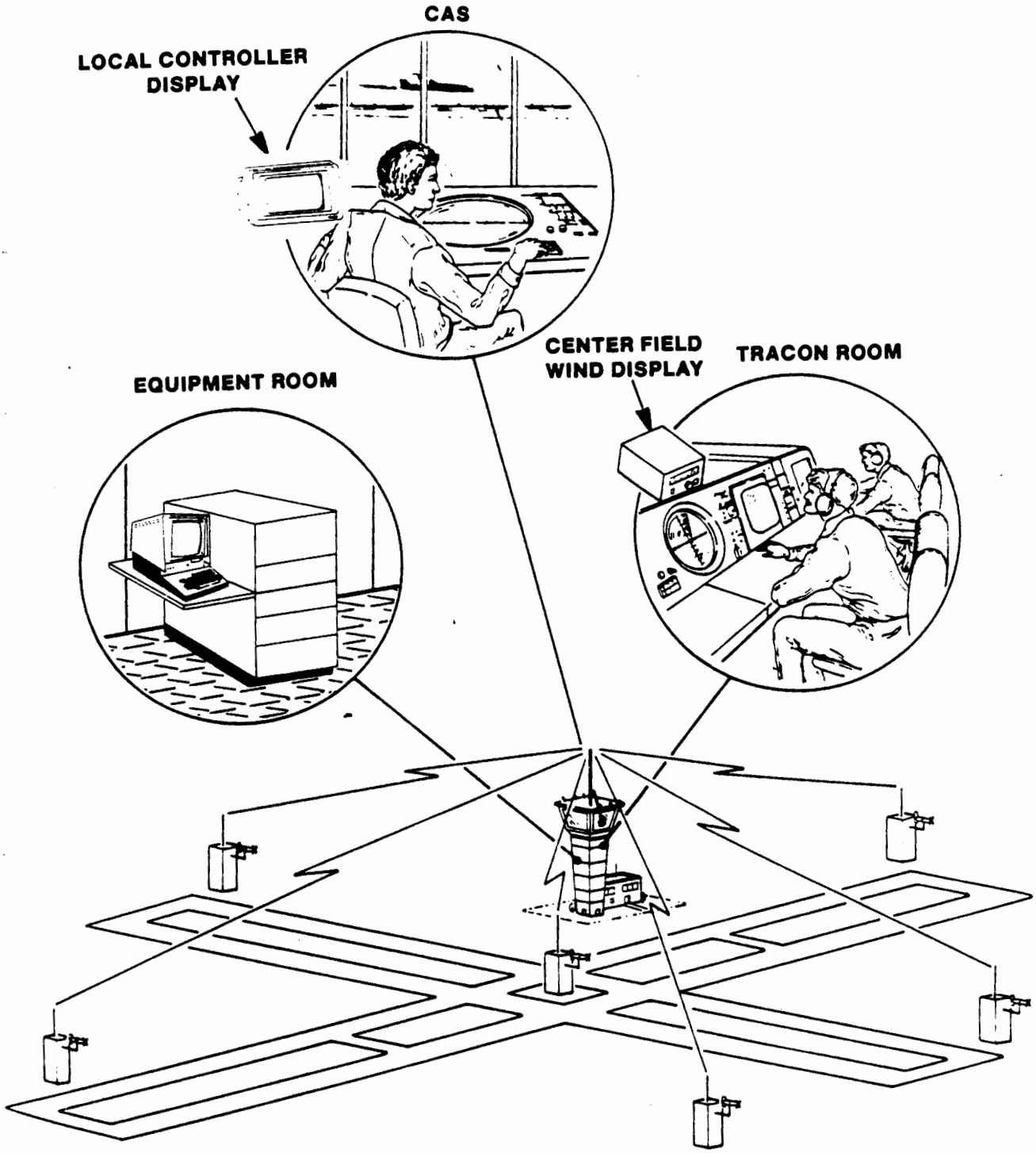

FIGURE A-2. TYPICAL LLWAS

The third procedure is the microburst detection (MD) procedure. It is designed to detect the motion of air within a triangular area where the vertices of the triangle are three LLWAS stations. Seventeen of the 69 possible triangles for the Denver LLWAS station network are shown in Figure A-3. Note that the triangles share edges and overlap. Two types of divergence are calculated: edge (linear) divergence and triangle (area) divergence. A microburst is identified and associated with a triangle if one of the following conditions is satisfied: (a) the threshold for one or more of the edges is exceeded, or (b) the threshold for the area divergence is exceeded.

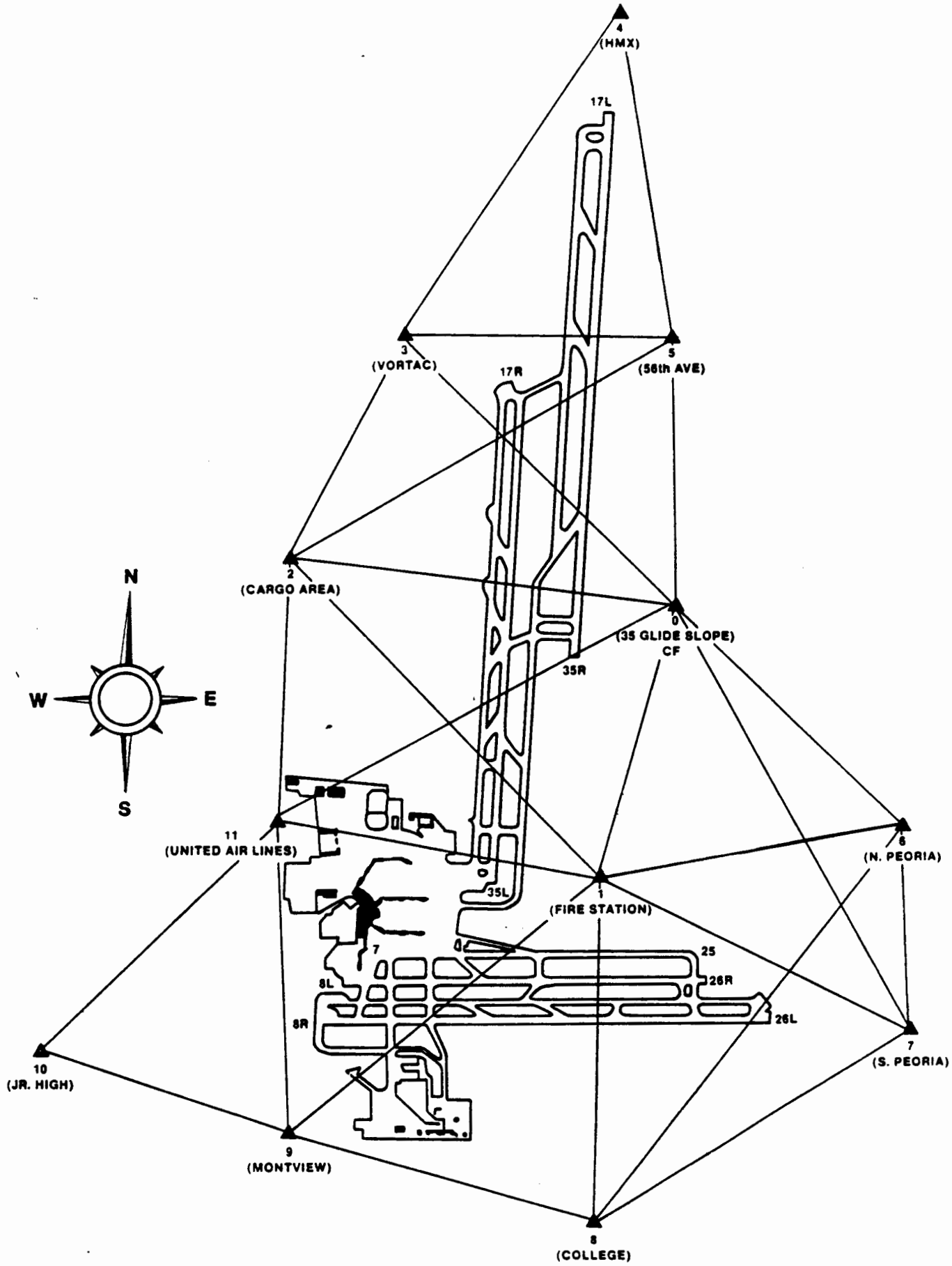

FIGURE A-3. DENVER STAPLETON MICROBURST DETECTION TRIANGLES

APPENDIX B

DENVER TOWER HUMAN FACTORS EVALUATION BRIEFING PROCEDURES AND EXHIBITS OF THE LOCAL CONTROLLER QUESTIONNAIRE FORMS TO BE USED

BRIEFING ON THE HUMAN FACTORS EVALUATION OF LLWAS AT THE DENVER TOWER
FOR TOWER SUPERVISORS AND CONTROLLER PARTICIPANTS

The FAA Technical Center is supporting the test of the experimental LLWAS at Denver. One of our support roles is the collection and analysis of user evaluations from you, the Denver controller/users of the system. We are collecting data by means of questionnaires. There are two questionnaire forms: A and B. We want to get your evaluation of the LLWAS now in use ("current" in Form A) prior to the installation of the new LLWAS ("modified" in Form B) and then your evaluation of the new LLWAS after it is installed.

Forms A and B are both 3 pages long and are very similar. Form A differs from Form B in that it does not contain questions 7 and 8 and has had the choices for question 1.p. blanked out. You will be asked to complete Form A once prior to the installation of the modified LLWAS and Form B three times following the installation according to the following schedule:

ORDER	FORM	WHEN ADMINISTERED
1st	A	Prior to installation of the new LLWAS
2nd	B	About 1 week after installation of the new LLWAS
3rd	B	About halfway through the test period
4th	B	At the end of the test period.

Why should you have to fill out the questionnaire four times? Typically most of us get used to a given system and, when changes are made, we tend to resist them and have problems just because the new setup is different. The above timing in the administration of the questionnaires will allow us to see how you rate the present system and then to see how your rating of the new system changes over time as you become familiar with it.

We realize that you are busy and have designed the questionnaires to minimize the time and effort needed to complete them. Your considered inputs as users of LLWAS and its display/control interface are very important in this effort to improve airport weather hazard detection and the display interface.

Please read over the questions carefully. If any of them are unclear, ask the FAA Technical Center representative for clarification. The reason for briefing you on this data collection effort is to establish an analytical mental set, to alert you to things to look for and to think about when you use the LLWAS. This should be helpful to you when you come to completing the questionnaires.

It is important that you answer based on your own perception of the LLWAS. Please do not share your answers with your coworkers. It is essential for the evaluation to have as many independent viewpoints as possible. Thank you for your cooperation in this effort.

Paul J. O'Brien

Paul J. O'Brien, Technical Program Manager, ACT-110

Form A Current LLWAS Evaluation Project Number T1203B
ATCS Operating Initials _____ Form Completion Date _____

U.S. Department of Transportation
Federal Aviation Administration

QUESTIONNAIRE FOR LOCAL CONTROLLERS AT DENVER TOWER

HUMAN FACTORS EVALUATION OF CURRENT LLWAS

Please complete this form and return to the representative of the FAA Technical Center. Place your operating initials and the date of completing the form at the top of each page. Your answers will be held in confidence.

1. Please rate different aspects of the current LLWAS using the following scale: (Place check marks in appropriate columns.)

+3 = Very Good
+2 = Good
+1 = Fairly Good
0 = Fair
-1 = Fairly Poor
-2 = Poor
-3 = Very Poor
? = Don't Know

ASPECT OF CURRENT LLWAS	RATING SCALE							
	+3	+2	+1	0	-1	-2	-3	?
a. Daytime readability of the display								
b. Nighttime readability of the display								
c. Readability of display in glare								
d. Noticeability of blinking messages								
e. Audibility of the alarm beeper								
f. Placement of the display								
g. Completeness of the displayed info								
h. Accuracy of the displayed info								
i. Absence of false alarms								
j. Timeliness of the displayed info								
k. Usefulness of the displayed info								
l. Freedom from misinterpretation								
m. Ease of accessing needed wind info								
n. Speed of system response								
o. Info grouping and order within rows								
p. Aptness of message abbreviations	ZZZZ	ZZZZ	ZZZZ	ZZZZ	ZZZZ	ZZZZ	ZZZZ	ZZZ
q. Naturalness of spoken phraseology								
r. Ease of changing runway configuration								
s. Speed of recovery from power failure								
t. Effectiveness under sensor outages								
u. Suitability for continued field use								

Any comments on the above? _____

_____

_____

ATCS Operating Initials _____ Form Completion Date _____

2. Do you see current LLWAS as a help or a hindrance to you in your job of controlling local traffic? (Please circle one letter below.)

a. A great help
b. A help
c. A slight help
d. Neither help nor hindrance
e. A slight hindrance
f. A hindrance
g. A great hindrance
h. Don't know

Any comments? _____

3. Do you see current LLWAS as a help or a hindrance to the pilot? (Please circle one letter below.)

a. A great help
b. A help
c. A slight help
d. Neither help nor hindrance
e. A slight hindrance
f. A hindrance
g. A great hindrance
h. Don't know

Any comments? _____

4. What's good about the current LLWAS? What benefits do you see?

_____

5. What's poor about the current LLWAS? What problems do you see?

_____

ATCS Operating Initials _____ Form Completion Date _____

6. Please rate the relative magnitude of benefits and problems of the current LLWAS by circling the appropriate letter below.

a. Benefits greatly exceed problems. Any comments? _____
b. Benefits exceed problems.
c. Benefits slightly exceed problems. _____
d. Benefits equal problems.
e. Problems slightly exceed benefits. _____
f. Problems exceed benefits.
g. Problems greatly exceed benefits. _____
h. Don't know.

Please list here any changes you feel should be made to the current LLWAS.

_____

_____

_____

_____

_____

_____

_____

_____

_____

_____

_____

_____

As an experienced ATCS and user of this equipment, your input is valuable to us in our efforts to improve it and to increase the efficiency and safety of the National Airspace System. Thank You.

U.S. Department of Transportation
Federal Aviation Administration

QUESTIONNAIRE FOR LOCAL CONTROLLERS AT DENVER TOWER

HUMAN FACTORS EVALUATION OF MODIFIED LLWAS

Please complete this form and return to the representative of the FAA Technical Center. Place your operating initials and the date of completing the form at the top of each page. Your answers will be held in confidence.

1. Please rate different aspects of the modified LLWAS using the following scale: (Place check marks in appropriate columns.)

+3 = Very Good
+2 = Good
+1 = Fairly Good
0 = Fair
-1 = Fairly Poor
-2 = Poor
-3 = Very Poor
? = Don't Know

ASPECT OF MODIFIED LLWAS	RATING SCALE							
	+3	+2	+1	0	-1	-2	-3	?
a. Daytime readability of the display								
b. Nighttime readability of the display								
c. Readability of display in glare								
d. Noticeability of blinking messages								
e. Audibility of the alarm beeper								
f. Placement of the display								
g. Completeness of the displayed info								
h. Accuracy of the displayed info								
i. Absence of false alarms								
j. Timeliness of the displayed info								
k. Usefulness of the displayed info								
l. Freedom from misinterpretation								
m. Ease of accessing needed wind info								
n. Speed of system response								
o. Info grouping and order within rows								
p. Aptness of message abbreviations								
q. Naturalness of spoken phraseology								
r. Ease of changing runway configuration								
s. Speed of recovery from power failure								
t. Effectiveness under sensor outages								
u. Suitability for continued field use								

Any comments on the above? _____

_____

_____

ATCS Operating Initials _____ Form Completion Date _____

2. Do you see modified LLWAS as a help or a hindrance to you in your job of controlling local traffic? (Please circle one letter below.)

a. A great help
b. A help
c. A slight help
d. Neither help nor hindrance
e. A slight hindrance
f. A hindrance
g. A great hindrance
h. Don't know

Any comments? _____

_____

_____

_____

3. Do you see modified LLWAS as a help or a hindrance to the pilot? (Please circle one letter below.)

a. A great help
b. A help
c. A slight help
d. Neither help nor hindrance
e. A slight hindrance
f. A hindrance
g. A great hindrance
h. Don't know

Any comments? _____

_____

_____

_____

4. What's good about the modified LLWAS? What benefits do you see?

_____

_____

_____

_____

_____

_____

5. What's poor about the modified LLWAS? What problems do you see?

_____

_____

_____

_____

_____

_____

ATCS Operating Initials _____ Form Completion Date _____

6. Please rate the relative magnitude of benefits and problems of the modified LLWAS by circling the appropriate letter below.

a. Benefits greatly exceed problems. Any comments? _____
b. Benefits exceed problems.
c. Benefits slightly exceed problems. _____
d. Benefits equal problems.
e. Problems slightly exceed benefits. _____
f. Problems exceed benefits.
g. Problems greatly exceed benefits. _____
h. Don't know.

7. Compare the overall effectiveness of the modified LLWAS (runway-oriented winds) to the prior LLWAS (boundary winds). Choose a phrase below to fill the blank, "The modified LLWAS is _____ the prior LLWAS.

a. Much better than Any comments? _____
b. Better than
c. Slightly better than _____
d. About the same as
e. Slightly worse than _____
f. Worse than
g. Much worse than _____
h. Don't know

8. Based on your present knowledge, please rate the modified LLWAS's suitability for widespread operational use in the field. Please circle one of the letters a. through h.

a. Suitable, install and use, fine as is, don't make any changes.
b. Suitable, install and use, minor adjustments optional.
c. Suitable, install and use, but some changes beneficial.
d. Marginally suitable, proceed with installation but make changes before use.
e. Unsuitable, don't install, changes definitely needed prior to installation.
f. Unsuitable, don't install, concept OK, but extensive rework mandatory.
g. Unsuitable, don't install, entire concept inappropriate.
h. Don't know.

Please list here any changes you feel should be made to the modified LLWAS.

_____

_____

_____

_____

As an experienced ATCS and user of this equipment, your input is valuable to us in our efforts to improve it and to increase the efficiency and safety of the National Airspace System. Thank You.

APPENDIX C

EXHIBIT OF THE ATC TOWER METEOROLOGIST
LLWAS ADVISORY TWO PAGE WORKSHEET

OBSERVER:_____ TIME:_____ DATE:_____

EVENT: START _____ END _____

RUNWAY CONFIGURATION: ARRIVALS _____ _____ DEPARTURES _____ _____

LLWAS DISPLAY WINDSHEAR INDICATION:

RUNWAY(S) _____

EVENT IDENTIFICATION: MICROBURST _____ WINDSHEAR _____

MAXIMUM HEADWIND INCREASE _____ LOSS _____

TIME OF MAXIMUM HEADWIND INCREASE _____ LOSS _____

MAXIMUM THRESHOLD WIND _____/_____

MAXIMUM CENTERFIELD WIND _____/_____

ADVISORY ISSUED:

N-S CONTROLLER: START____ END____, NOT ISSUED: FALSE ALARM____NO A/C_____

E-W CONTROLLER: START____ END____, NOT ISSUED: FALSE ALARM____NO A/C_____

METEOROLOGIST OBSERVATION:_____

_____

_____

_____

_____

CONFIRMED, WINDSHEAR EVENT NOT DETECTED BY LLWAS:_____

_____

_____

FALSE ALARMS:_____

_____

_____

FIGURE C-1. ATC TOWER METEOROLOGIST LLWAS ADVISORY WORKSHEET

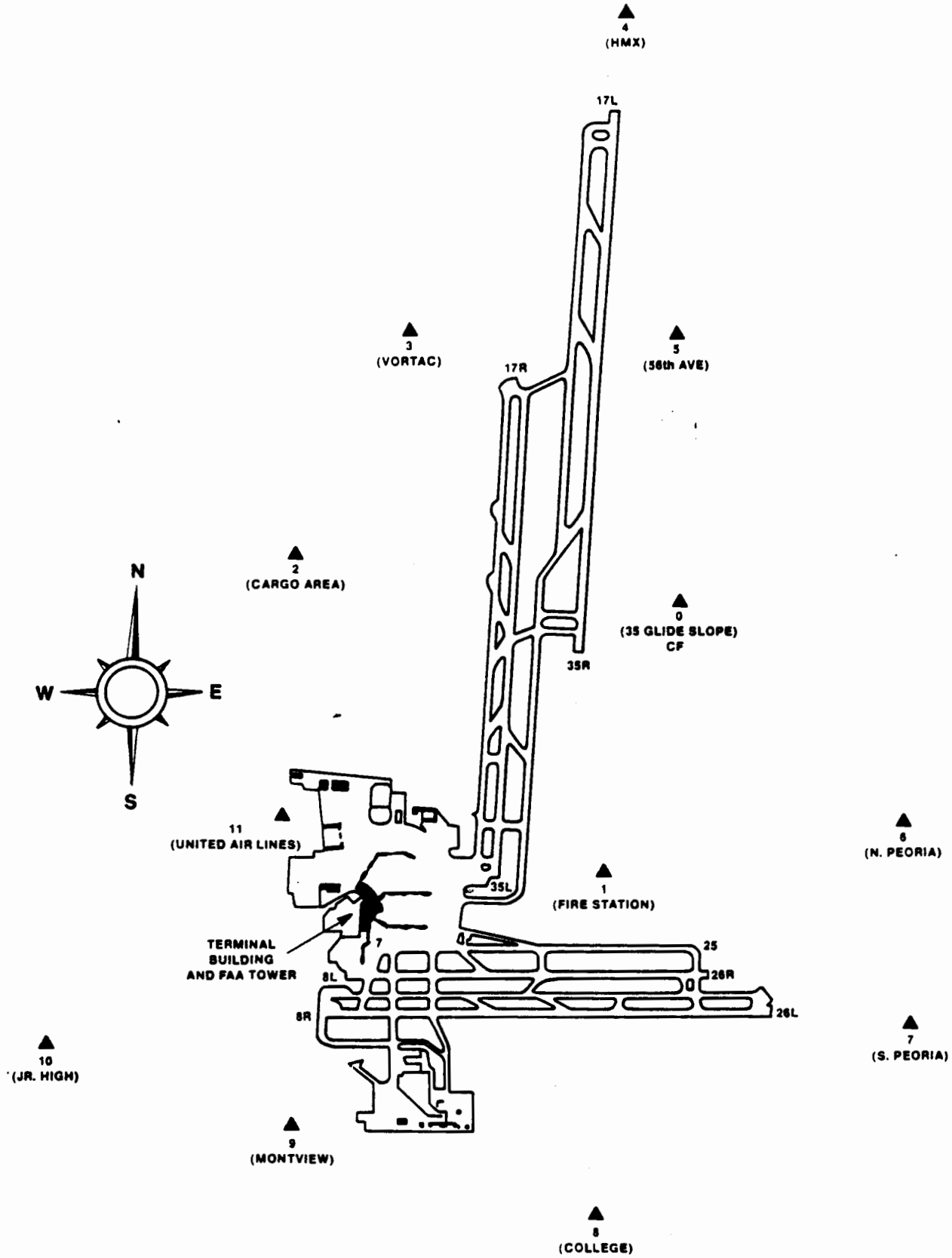

FIGURE C-2 LLWAS REMOTE STATION SITES AT DENVER, COLORADO TEST BED

APPENDIX D

EXHIBITS OF THE RADAR SITE METEOROLOGIST LLWAS ADVISORY WORKSHEET, RADAR EVENT LOG AND LOCATOR CHART FORMS

LIST OF ILLUSTRATIONS

Figure		Page
D-1	Radar Site Meteorologist Observer LLWAS Advisory Worksheet	D-1
D-2	Radar Event Log - Denver Test and Evaluation	D-2
D-3	Windshear/Microburst Event Locator Chart - Denver Stapleton Runways	D-3

OBSERVER: _____ TIME: _____ DATE: _____

EVENT: START _____ END _____

RUNWAY CONFIGURATION: ARRIVALS _____ _____ DEPARTURES _____ _____

LLWAS DISPLAY WINDSHEAR INDICATION:

RUNWAY(S) _____

EVENT IDENTIFICATION: MICROBURST _____ WINDSHEAR _____

MAXIMUM HEADWIND INCREASE _____ LOSS _____

TIME OF MAXIMUM HEADWIND INCREASE _____ LOSS _____

MAXIMUM THRESHOLD WIND _____/_____

MAXIMUM CENTERFIELD WIND _____/_____

METEOROLOGIST OBSERVATION: _____

_____

_____

_____

_____

CONFIRMED, WINDSHEAR EVENT NOT DETECTED BY LLWAS: _____

_____

_____

FALSE ALARMS: _____

_____

_____

FIGURE D-1. RADAR SITE METEOROLOGIST OBSERVER LLWAS ADVISORY WORKSHEET

Observer _____ Date _____

Time (MDT)	Elev. (deg)	Range (km)	Azim. (deg)	Z (dBZ)	Δ v (ms^{-1})	distance (km)	affected runways: Δ v along runway	affected runways: Δ v across runway	Comments

FIGURE D-2 - RADAR EVENT LOG- DENVER TEST AND EVALUATION

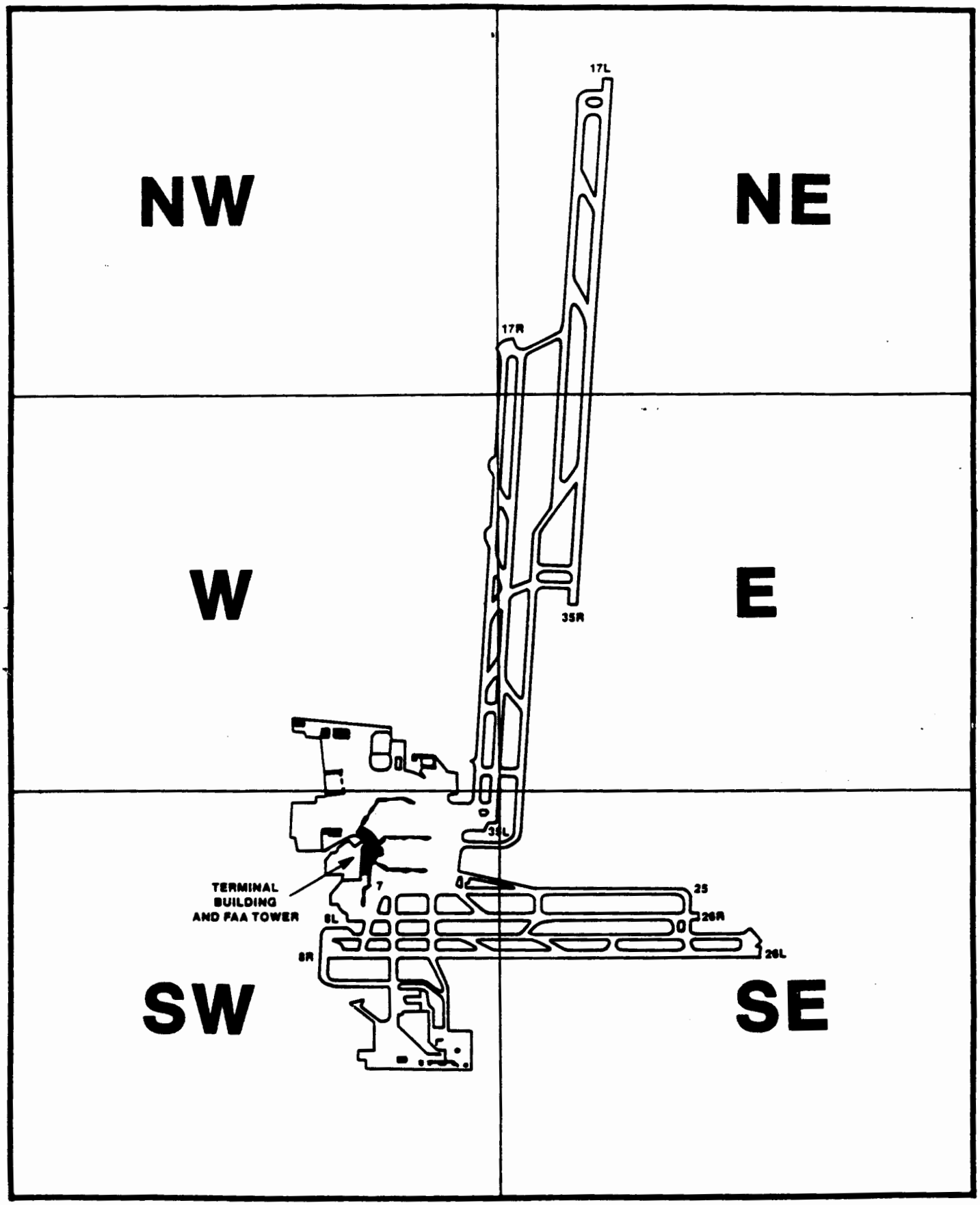

FIGURE D-3 - WIND SHEAR / MICROBURST EVENT LOCATOR CHART - DENVER STAPLETON RUNWAYS

APPENDIX E

EXHIB OF THE NCAR PILOT QUESTIONNAIRE

PILOT QUESTIONNAIRE

WINDSHEAR AND TURBULENCE DETECTION TEST

DENVER STAPLETON INTERNATIONAL AIRPORT

(Use between 18 May and 4 September 1987)

DATE _____ AIRCRAFT TYPE _____ FLIGHT NO. _____

TRANSPONDER CODE _____ FLIGHT PHASE (circle): ARRIVAL, DEPARTURE

WINDSHEAR AND TURBULENCE ENCOUNTER INFORMATION

1. Did you encounter any significant windshear below 1000 feet AGL during takeoff or approach? Yes ____ No ____

   If "Yes", complete: Approximate time of encounter _____ (Z)

   Airspeed Loss (-) and/or Gain (+) _____

   Altitude of Encounter _____

   Altitude Loss (-) or Gain (+) _____

   Location: ____ Over the runway

   ____ 0-1 mile from the runway

   ____ 1-2 miles from the runway

   ____ 2-3 miles from the runway

2. Was a microburst or windshear warning issued to you by ATC at any time during takeoff or approach? Yes ____ No ____

3. If you answered "Yes" to both questions 1 and 2, please complete the following:

   Was the warning useful? Yes ____ No ____

   What type of warning was it? Microburst ____ Windshear ____

   What windspeed loss or shear value was issued? _____

4. Did you encounter any moderate or more intense turbulence while operating in the Denver Terminal Area? Yes ____ No ____

   If "Yes", complete: Time of encounter _____ (Z)

   Magnitude: Moderate ____ Severe ____ Extreme ____

   Altitude of encounter _____

   Location (DEN VORTAC) _____

We are attempting to improve real-time turbulence and low-altitude windshear warnings. Any pertinent comments are appreciated. (Use the reverse side if necessary.)

_____

_____

_____

_____

Please return this form in the envelope provided. Your participation and assistance is greatly appreciated!