CT-82-100-120LR

FAA WJH Technical Center
00092661

MAR 82 Rec'd

TECHNICAL CENTER LIBRARY
ATLANTIC CITY, N.J. 08405

FAA TECHNICAL CENTER LETTER REPORT

SERIAL DATA REFORMATTER EQUIPMENT DESCRIPTION

by

Edward F. Mancus

December 1982

U. S. DEPARTMENT OF TRANSPORTATION
FEDERAL AVIATION ADMINISTRATION
TECHNICAL CENTER
Atlantic City Airport, N.J. 08405

TABLE OF CONTENTS

PURPOSE 1

INTRODUCTION 1

RELATED DOCUMENTS 2

DESCRIPTION OF EQUIPMENT 2

- GENERAL DESCRIPTION 2
- SERIAL DATA REFORMATTING CHANNELS 3
- CHANNEL REFORMATTING SOFTWARE 3
- SIMULATION & DIAGNOSTIC MODULE 5
- SDM DIAGNOSTIC SOFTWARE 6
- SDM SCENARIO SOFTWARE 9

SUMMARY 9

APPENDIX A BASELINE FORMATS FOR THE MODE S/ARTS IIIA INTERFACE TESTS

APPENDIX B DETAILED LOGIC SCHEMATICS FOR THE SERIAL DATA REFORMATTER EQUIPMENT

APPENDIX C PROGRAM LISTING FOR REFORMATTER CHANNELS

APPENDIX D PROGRAM LISTING FOR SIMULATION AND DIAGNOSTIC MODULE

APPENDIX E EQUIPMENT INSTALLATION AND OPERATION

LIST OF ILLUSTRATIONS

FIGURE		PAGE
1	Serial Data Reformatter Equipment Functional Block Diagram	2A
2	Reformatter Equipment Front Elevation	2B
3	Serial Data Reformatter Channel Block Diagram	3A
4	Functional Flowchart for Input Service Routine	4A
5	Functional Flowchart for Output Service Routine	4B
6	Functional Flowchart for Data Reformatting Routine	4C
7	Flowchart for Beacon Report Reformatting Routine	5A
8	Mode S & CD-2/ASR-9 Beacon Report Formats	5B
9	Mode S CPME & CD-2/ASR-9 Beacon Report Formats	5C
10	Mode S BCN Strobe & CD-2/ASR-9 BCN RTQC Message Formats	5D
11	Flowchart for Search Report Reformatting Routine	5E
12	Mode S & CD-2/ASR-9 Search Report Formats	5F
13	Mode S Synch Message and CD-2/ASR-9 Search RTQC Message Formats	5G
14	Flowchart for Status Message Output Routine	5H
15	Block Diagram of Simulation and Diagnostic Module	5I

LIST OF TABLES

TABLE		PAGE
1	Data Transmit Table #1	7
2	Data Lookup Table	7
3	Data Transmit Table #2	7

PURPOSE.

The intent of this document is to provide a functional description of the serial data reformatter equipment, and to enumerate it's capabilities and uses.

INTRODUCTION.

The Federal Aviation Administration (FAA) has, since 1979, been engaged in the test and evaluation (T&E) of three sensors built by Texas Instruments, Inc. To date, Mode S beacon and search radar baseline tracking capabilities have been established. Limited data has been collected, however, on the performance of other systems that will eventually utilize Mode S surveillance data when Mode S is implemented. It was decided that a test effort was required to investigate a prototype interface between the Mode S sensor and the automated radar terminal system (ARTS IIIA) utilizing the Mode S surveillance data to establish tracking performance of the ARTS IIIA. The ARTS IIIA system was selected since it will be one of the primary users of Mode S surveillance data.

Mode S integration with the ARTS IIIA will be implemented in the field in two phaes. In the initial phase, modifications to the ARTS IIIA operational software will be minimal. The ARTS IIIA will receive scan-to-scan uncorrelated reports from the Mode S sensor and perform all tracking functions. In the second phase, hardware and software enhancments will be developed to allow the ARTS IIIA to take advantage of the more accurate sensor data and the discrete addressing functions derived from the Mode S. The ARTS IIIA will also receive track data from the Mode S while retaining its own track files to maintain ground speed and position prediction information on aircraft.

The T&E effort scheduled to begin Janurary 1983 will focus on evaluating the initial interface between the Mode S site and the ARTS IIIA system for the first implementation phase. To accomplish this it was determined that a special piece of test equipment was necessary to satisfy the surveillance interface requirements set forth in this effort. Although the 'Formatting and Dissemination' function of the Mode S operational software could be modified to meet these requirements it would take a substantial programming effort to do so. In addition, it was desirable to have greater flexability to modify the formatting and dissemination routines quickly if it became necessary. The serial data reformatter equipment was designed and fabricated for this reason.

The serial data reformatter equipment modifies the current surveillance interface between the Mode S sensor and the terminal automation test facility (TATF)/ARTS IIIA system. This new interface is similar to an interface that is planned during the initial Mode S implementation phase. The Mode S surveillance data will be reformatted similar to common digitizer (CD-2) format, modified for use by terminal facilities. This format will be refered to as the CD-2/Air Surveillance Radar (ASR-9) format within this document. Two real time quality control targets (RTQC's), one beacon and one search,

will be disseminated each scan at predetermined positions. In addition, status messages will be disseminated at random intervals to the ARTS IIIA to deminstrate system software recognition.

RELATED DOCUMENTS.

a. DABS/ATC Surveillance and Communications Message Formats, FAA-ER-80-14, April 1980.

b. Mode S/ARTS IIIA Interface Testing Project Plan, CT-82-100-119LR.

DESCRIPTION OF EQUIPMENT.

The following paragraphs provide a functional description of the serial data reformatter equipment.

GENERAL DESCRIPTION. The serial data reformatter equipment is a dual channel serial data reformatter with self diagnostic capability. It was designed and built by personnel of the FAA Technical Center to support Mode S/ARTS IIIA system integration tests. In general, the serial data reformatter equipment will receive and send serial data over a standard EIA-RS-232C or MIL-STD-188C interface. Programs resident in firmware enables the reformatter equipment to accept serial data formatted, as specified, in report No. FAA-RD-80-14 and reformat the data as descriped in appendix A prior to retransmission. A moduler block diagram of the reformatter equipment is shown on figure 1. Detailed logic schemetics for each module is provided in appendix B.

The reformatter equipment is physically housed in a chassis which mounts in a standard 19-inch rack. The chassis includes a ten unit card cage, D.C. power supplies, and a muffin fan for cooling. As shown in figure 2 the front panel is divided into three principle sections. Two sections labled channel 1 and channel 2 are basically identical. Each section has an input connector and an output connector compatible with the existing 25-pin cinch connecters of the sensor and modems. Four identical connecting cables, 10 foot in length, are provided to simplify the installation of the equipment between the sensor's two surveillance output ports and the digital side of two modems. Each channel has two line indicators, one indicating the presents of the modem clock and the other indicating activity on the data line. Also included is an 8-bit light emitter diode (LED) display for on-line monitoring of each channel's status and operation. The third functional section enables an operator to run off-line diagnostic and simulation routines. This section consists of an 8-bit LED display, 16 address switches, an address mode control switch, system reset button, and the system on/off power switch. A detailed description of the unit's operation is given in appendix E.

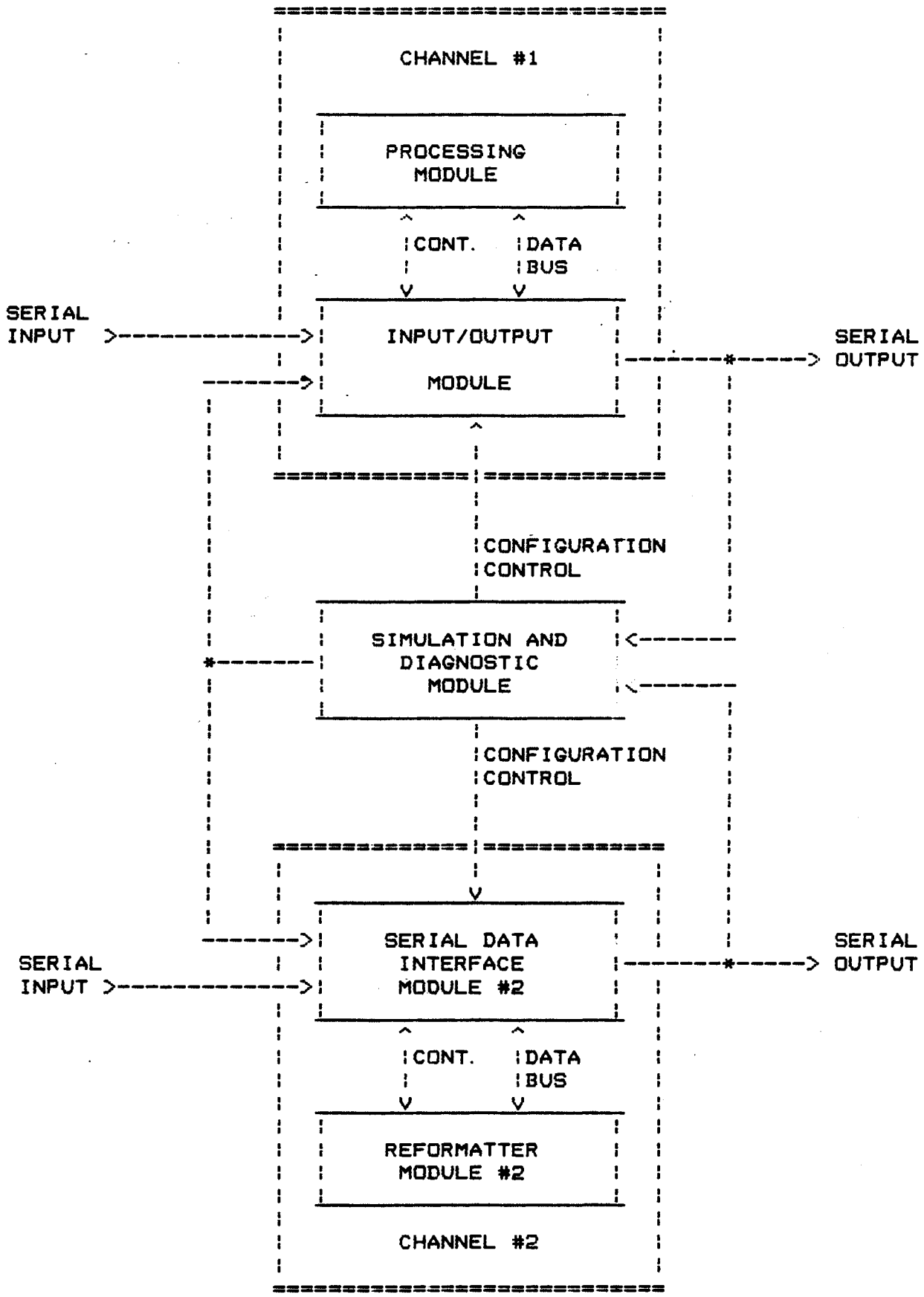

FIGURE 1. SERIAL DATA REFORMATTER EQUIPMENT MODULAR BLOCK DIAGRAM

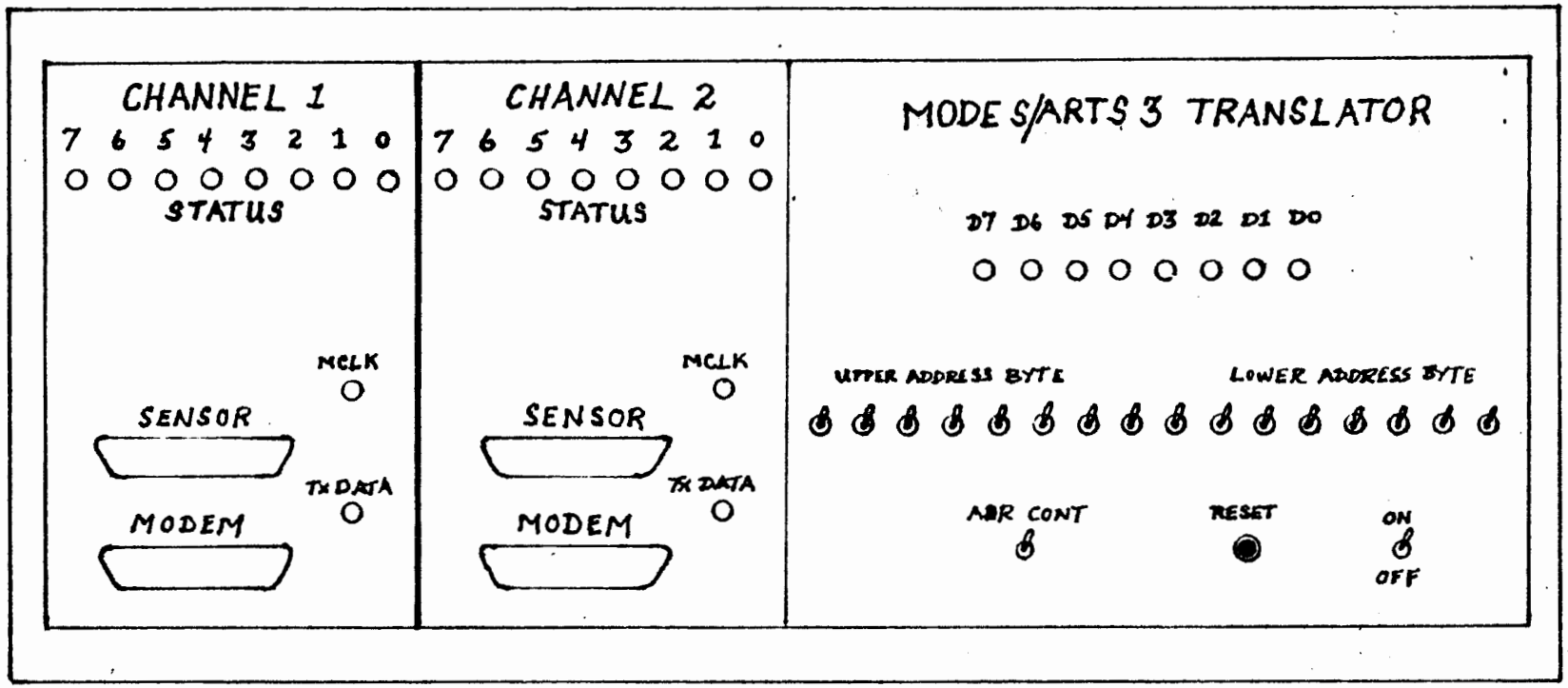

FIGURE 2. REFORMATTER EQUIPMENT
FRONT VIEW

SERIAL DATA REFORMATTING CHANNELS. The serial data reformatter equipment consists of two independent and identical serial data reformatting channels. Each channel is made up of two modules refered to as the 'processing' module and the 'input/output' (I/O) module. Each module is fabricated on its own logic card. Refering to figure 3, the functional blocks of the processing module are the microprocessor unit, 4K of erasable programmable read only memory (EPROM), 1K of random access memory (RAM), and interrupt handling control logic (not shown on the figure). The functional blocks of the I/O module are the serial input and serial output shift registers, parity checker, parity generator, and two peripheral interface adapters for servicing data transfers between the processing module and the shift registers. The channel performance monitor, an 8-bit LED display, is located on the front panel of the reformatter.

The I/O module provides the interface link between the serial data input stream and the processing module, and between the processing module and the serial data output stream. It receives a clock from a MODEM and uses the clock as the basic timing source for receiving and transmitting data. Mode S data is received serially by a serial-to-parallel shift register. The data is shifted through the register in one bit steps every modem clock period. An input service request (input interrupt) is generated for each modem clock period and sent to the processing module for service. An output service request is generated for each 13-modem clock interval and sent to the processing module for service as well. Reformatted data is loaded into a parallel-to-serial shift register and is shifted out at the same modem clock rate.

The processing module performs all the tasks necessary to convert the Mode S surveillance output port to one compatible with the ARTS IIIA surveillance input port. The processing module initially intercepts and stores all Mode S surveillance data in RAM. After a complete message is received the processing module determines whether the message will be purged or reformatted. In addition, it is tasked to output a simulated status message at random intervals, approximately one per scan averaged over a long period of time. The channel performance monitor provides the following information when the channel operating software is running.

D0 - Channel synchronized to Mode S data stream
D1 - Incorrect Mode S message detected
D2 - Reformatted Mode S data being disseminated
D3 - Mode S message parity error
D4 - No Mode S messages detected
D5 - Beacon/Search RTQC toggle - on for beacon/off for search
D6 - Software interrupt detected
D7 - Currently unused

CHANNEL REFORMATTING SOFTWARE. The channel reformatting software consists of the following three major routines:

Input Service Routine (ISR)
Output Service Routine (OSR)

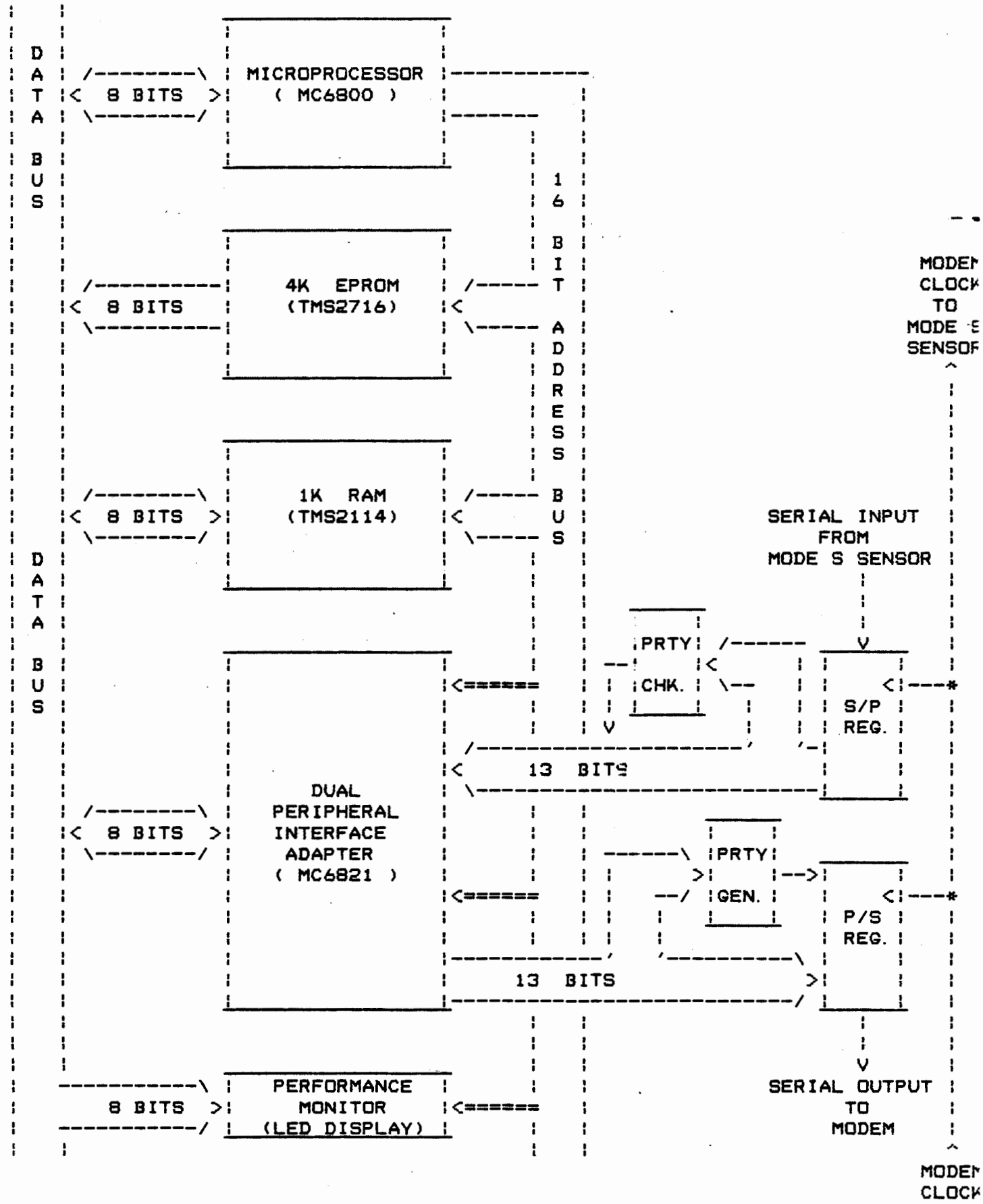

FIGURE 3. SERIAL DATA REFORMATTER CHANNEL BLOCK DIAGRAM

Data Reformatting Routine (DRR)

1. Input Service Routine - The principle functions of the ISR is to synchronize to the input data stream, detect and store all incoming messages, and notify the DRR that a complete message is available for processing. This routine is executed each time an input service request is received from the I/O module. Listings for this routine along with the following two routines is provided in appendix C.

A flowchart of the ISR is presented in figure 4. During initial start up, the ISR examines the input data stream, each modem clock interval in search of an idle character. When an idle character is detected, a flag is set indicating that the ISR is synchronized to the input data stream and a bit counter is initialized to zero. The bit counter is incremented for each input service request until a count of 13 is reached, indicating that a new frame has shifted into the input shift register. The bit counter is set back to zero to repeat the sequence for the next frame to be received. At this time the ISR examines the frame to determine if it is another idle character or a message header. If the frame is an idle character no further action is taken. If the frame is a message header, the ISR presets the frame counter equal to the number of frames contained in the message. An idle character is stored in the input data buffer prior to the message header and the frame counter is decremented. The frame counter is decremented for each seceeding frame stored until it reaches zero, indicating a complete message is stored in the input data buffer. At this time, a sequence-complete flag is raised signaling the DRR that a complete message is available for processing.

2. Output Service Routine - The primary function of the OSR is to output reformatted data or output idle characters when no data is available to the ARTS IIIA. The OSR is executed each time an output service request is received from the I/O module.

A flowchart for the OSR is presented in figure 5. When the OSR receives an output service request it first determines if data is available in the output buffer. If the buffer contains data the next available frame is loaded into the output shift register and shifted out. If the output buffer is empty an idle character is loaded into the output shift register.

3. Data Reformatting Routine - The DRR contains all the routines necessary to transform the Mode S surveillance output port to one acceptable to the ARTS IIIA surveillance input port. In addition, this routine initializes both reformatting channels when power is first switched on and each time the system is reset. The basic flow of the DRR is shown in figure 6. The DRR contains the follows four specific interface conversion routines:

Beacon Report Reformatting Routine (BRRR)
Search Report Reformatting Routine (SRRR)
Weather Message Purge Routine (WMPR)
Status Message Output Routine (SMOR)

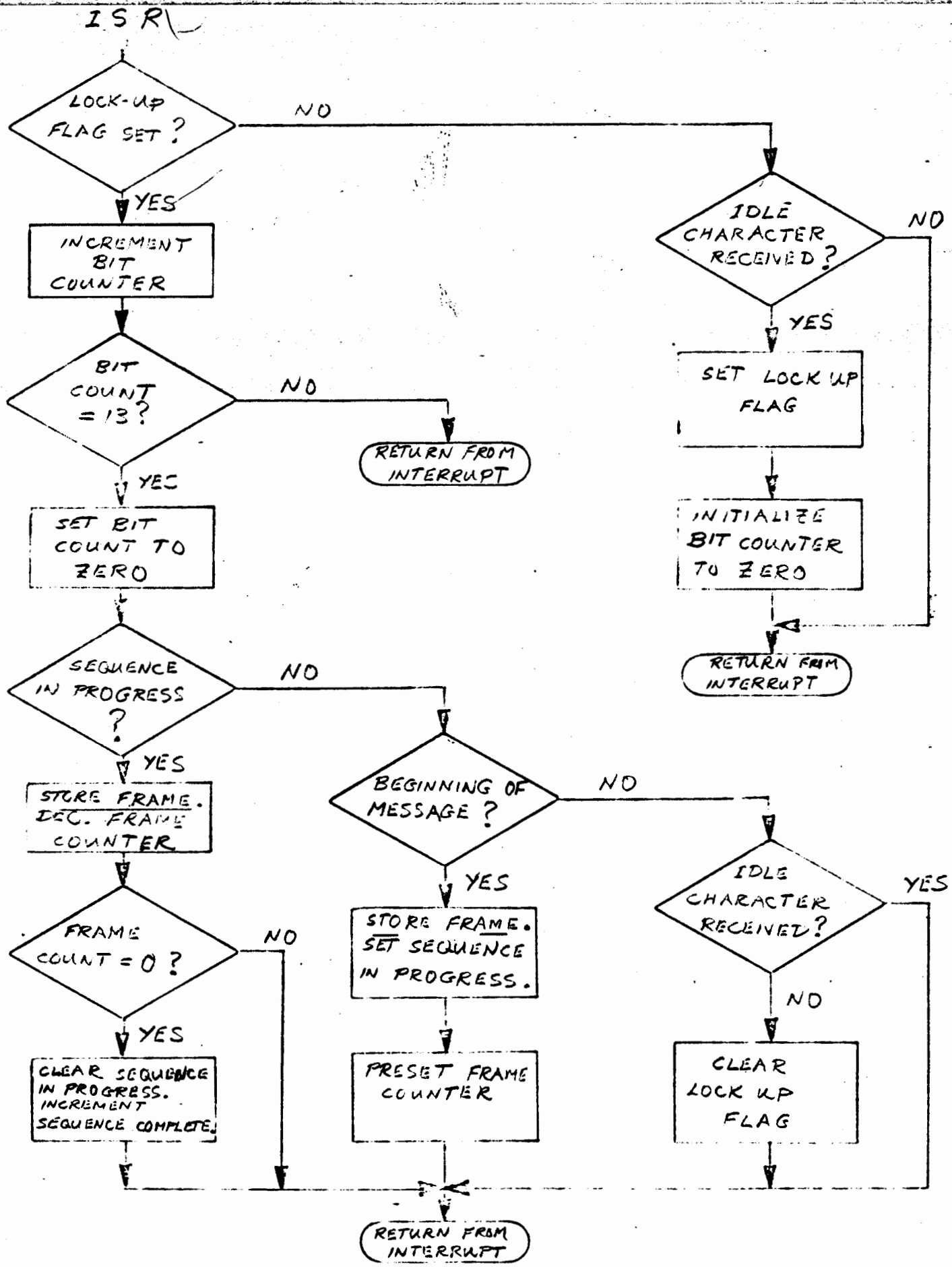

FIGURE 4. FUNCTIONAL FLOWCHART FOR INPUT SERVICE ROUTINE

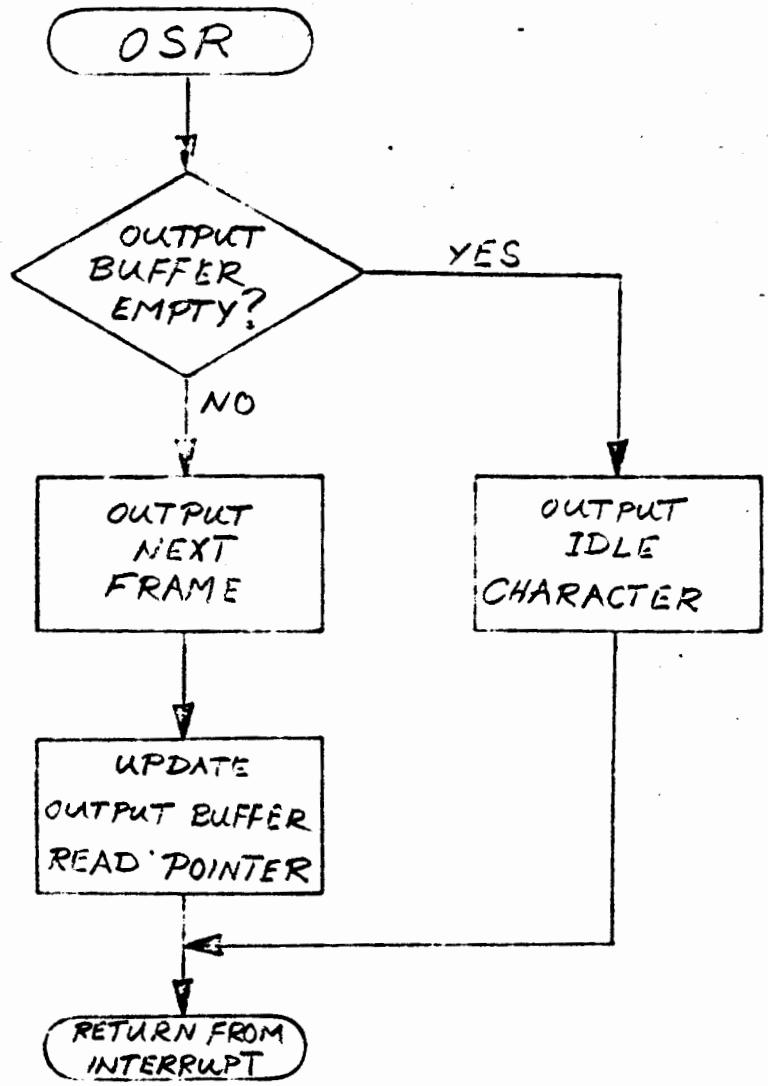

FIGURE 5. FUNCTIONAL FLOWCHART FOR OUTPUT SERVICE REQUEST

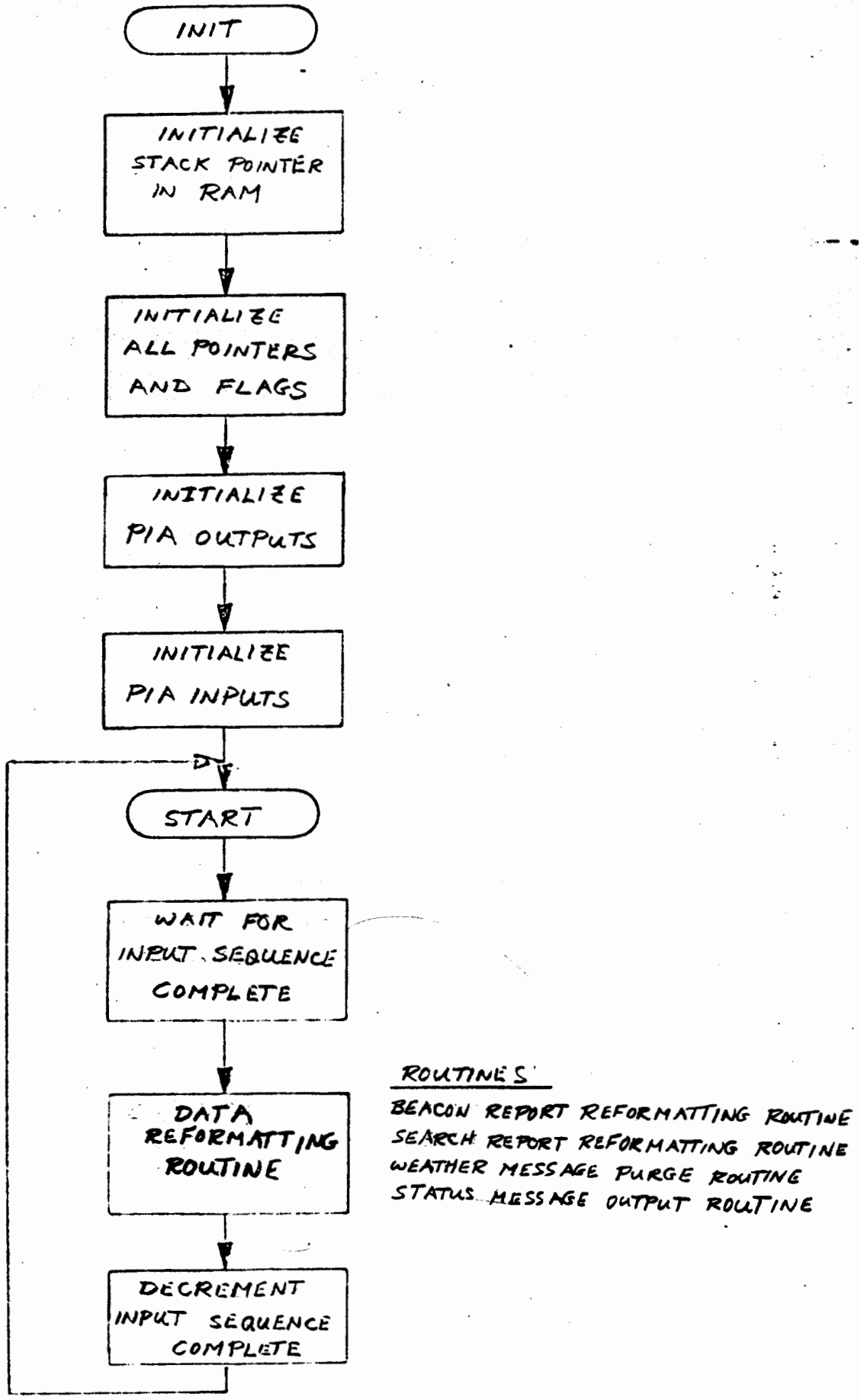

FIGURE 6. FUNCTIONAL FLOWCHART OF DATA REFORMATTING ROUTINE

a. The BRRR performs two specific functions: reformats Mode S air traffic control radar beacon system (ATCRBS) reports and the ATCRBS calibration and performance monitoring equipment (CPME) report into regular CD-2/ASR-9 formatted beacon reports; and outputs a pre-defined beacon RTQC report when a special purpose beacon strobe message is received from the Mode S sensor. A functional flowchart of the BRRR is shown in figure 7. Figures 8, 9, and 10 show the format of the regular Mode S ATCRBS beacon report, ATCRBS CPME report, and beacon strobe, respectively, along with their corresponding formats after BRRR reformatting.

The Mode S formatting and dissemination function will reformat Mode S beacon reports to ATCRBS reports prior to dissemination. This is required to obtain the discrete code of Mode S transponder-equipped aircraft. Also the Mode S sensor will output a special beacon strobe message to the reformatter equipment. The BRRR will recognize this message as a signal to immediately output a beacon RTQC message.

b. The SRRR performs two specific functions; reformats Mode S search reports to CD-2/ASR-9 formatted search reports, and outputs a canned search RTQC report when a azimuth synchronization message is received. A functional flowchart of the SRRR is shown in figure 11. Figure 12 shows the general output format of the Mode S search message along with the corresponding CD-2/ASR-9 format after SRRR reformatting. Figure 13 shows the azimuth synchronization message along with the CD-2/ASR-9 formatted Search RTQC message after SRRR processing.

c. The WMPR purges all weather messages loaded into the input data buffer.

d. The purpose of the SMOR is to load a simulated status message in the output buffer for transmission. Status messages are disseminated randomly at an approximate rate of one per scan averaged over a period of 10 minutes or longer. The SMOR is executed each time a Mode S surveillance message is successfully reformatted.

A functional flowchart for the SMOR is presented in figure 14. Refering to figure 14, each time the SMOR is executed a 15-bit maximum sequence counter is updated. The content of this counter is then compared to an upper and lower threshold. If the count falls between the two thresholds the routine will output a status message. The thresholds are set to allow one status message to be transmitted for every 128 surveillance messages.

<u>SIMULATION AND DIAGNOSTIC MODULE (SDM).</u> The purpose of the SDM is to assist in debugging the serial data reformatter equipment during fabrication and later as a verification tool prior to each test. This module can verify the operational status of each reformatter channel without external test equipment. Also the integrity of the SDM can be verified in a self diagnostic mode. The functional blocks of the SDM, figure 15, are similar to those of the reformatting channels.

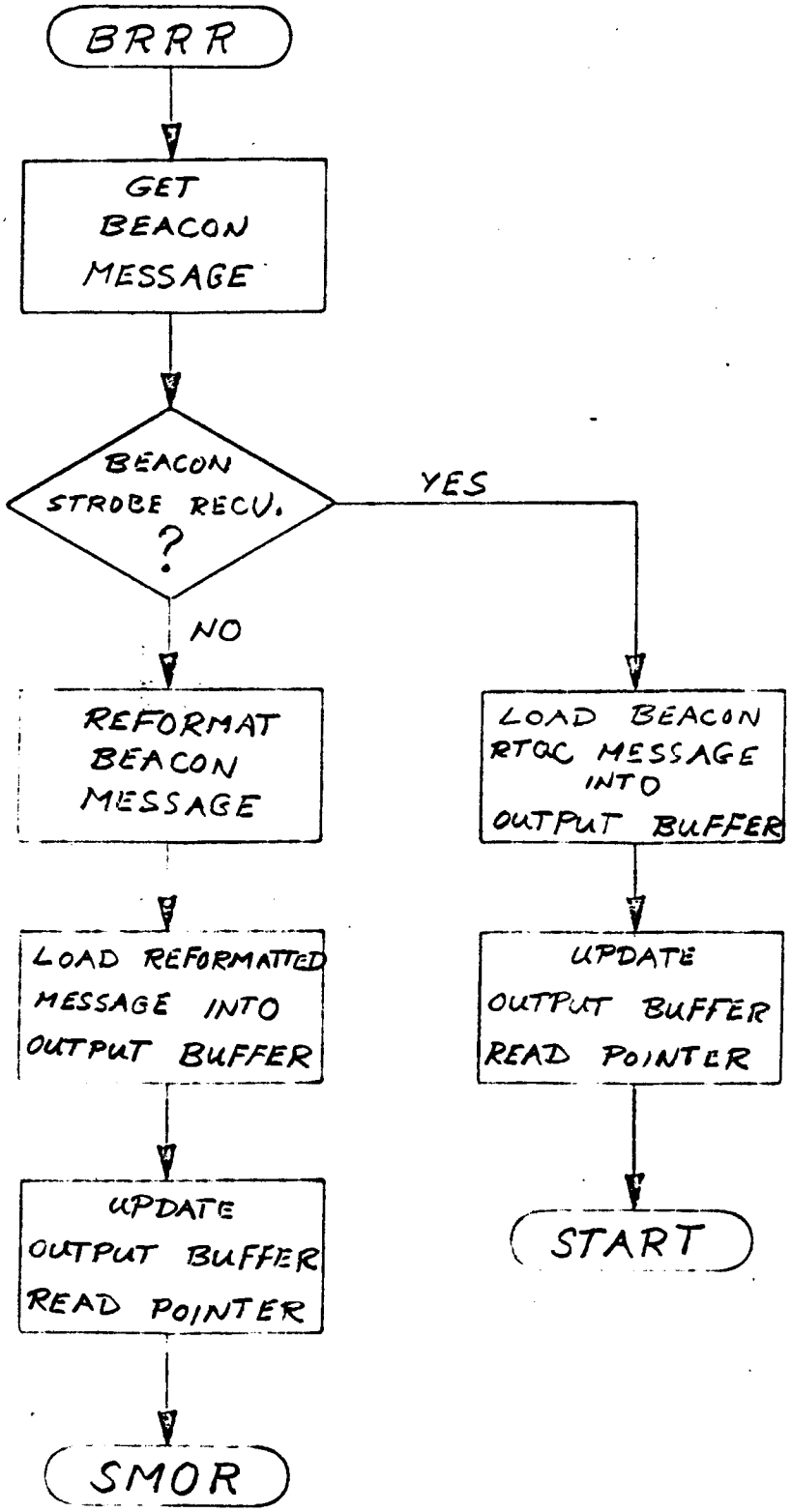

FIGURE 7. FLOWCHART FOR BEACON REPORT REFORMATTING ROUTINE

```
\ BIT| 12 | 11 | 10 |  9 |  8 |  7 |  6 |  5 |  4 |  3 |  2 |  1 |  0 |
  \  |    |    |    |    |    |    |    |    |    |    |    |    |    |
FRM \
     |  0 |  1    1    0 |  X |  X |  X |  X ;  X |  X |  1 |  0 |  X |
  IN |    |              |    |    |    |    ;    |    |    |    | ODD|
 1   |TEST| MESSAGE IDENT| 3/A|  C |IDNT| R/R;7700|7600| FAA| RDR|PRTY|
     |  0 |  1    1    0 |  X |  X |  X |  X ;  X |  X |  1 |  1 |    |
 OUT |    |              |    |    |    |    ;    |    |    |    | ODD|
     |TEST| MESSAGE IDENT| 3/A|  C |IDNT| R/R;7700|7600| FAA| AF |PRTY|
     |=====================================;=======================|
     | MSB = 128 NM.                       ;                       |    |
  IN |                                     ;                       | ODD|
 2   | <----------------------- RANGE ----------------------->     |PRTY|
     | MSB = 32 NM.                        ;     LSB = 1/64 NM.    |    |
 OUT |                                     ;                       | ODD|
     | <----------------------- RANGE ----------------------->     |PRTY|
     |=====================================;=======================|
     |LSB = 1/128 NM| MSB = 180            ;                       |    |
  IN |              |                      ;                       | ODD|
 3   | <-- RG --> | <------------- AZIMUTH ---------------->       |PRTY|
     | MSB = 180                           ;        LSB = .088     |    |
 OUT |                                     ;                       | ODD|
     | <---------------------- AZIMUTH ---------------------->     |PRTY|
     |=====================================;=======================|
     |        LSB = .044 |    |    |    |  ;  X    X    X    X    |    |
  IN |                   |    |CODE|    |RLAY;  1 | 1/2| 1/4| 1/8| ODD|
 4   | <-----  AZ  ----> |CONF|TRAN| FTF|MODE; <----  TIS  ----> |PRTY|
     |  0 |  0    0 |  0 |  0 |  0 |  X    X ;  X    X | 0 | 0 |    |
 OUT |    |         |    |    |    |  1 | 1/2; 1/4| 1/8| R/L| MTI| ODD|
     |AIMS|  S    S |DISC| M2 |M3/A| <---- TIS ----> |FLAG|FLAG|PRTY|
     |=====================================;=======================|
     |                                     ;                       |    |
  IN |                                     ;                       | ODD|
 5   | <---------------------- MODE 3/A ---------------------->    |PRTY|
     |                                     ;                       |    |
 OUT |                                     ;                       | ODD|
     | <---------------------- MODE 3/A ---------------------->    |PRTY|
     |=====================================;=======================|
     |                                     ;                       |    |
  IN |                                     ;                       | ODD|
 6   | <------------------------ SFN -----;---------------->       |PRTY|
     |                                     ;                       |    |
 OUT |                                     0000 (OCT)              | ODD|
     | <------------------------ MODE 2 ---------------------->    |PRTY|
     |=====================================;=======================|
     |                                     ;                       |    |
  IN |                                     ;                       | ODD|
 7   | <------------------------ MODE C ---------------------->    |PRTY|
     |                                     ;                       |    |
 OUT |                                     ;                       | ODD|
     | <------------------------ MODE C ---------------------->    |PRTY|
```

FIGURE 8. MODE S ATCRBS BCN REPORT AND
CD-2/ASR-9 BCN REPORT FORMATS

```
\ BIT| 12 | 11 | 10 |  9 |  8 |  7 |  6 |  5 |  4 |  3 |  2 |  1 |  0 |
 \   |    |    |    |    |    |    |    |    |    |    |    |    |    |
FRM \
     |  1 |  1    1    0 |  X |  X |  X |  X |  X |  X |  1 |  0 |    |
 IN  |    |                |    |    |    |    |    |    |    |    | ODD|
 1   |TEST| MESSAGE IDENT| 3/A|  C |IDNT| R/R|7700|7600| FAA| RDR|PRTY|
     |  0 |  1    1    0 |  X |  X |  X |  X |  X |  X |  1 |  1 |    |
 OUT |    |                |    |    |    |    |    |    |    |    | ODD|
     |TEST| MESSAGE IDENT| 3/A|  C |IDNT| R/R|7700|7600| FAA| AF |PRTY|
     |=====================================|=========================|
     | MSB = 128 NM.                       |                         |
 IN  |                                     |                         | ODD|
 2   | <------------------------ RANGE ------------------------> |PRTY|
     | MSB = 32 NM.                        |   LSB = 1/64 NM.        |
 OUT |                                     |                         | ODD|
     | <------------------------ RANGE ------------------------> |PRTY|
     |=====================================|=========================|
     |LSB = 1/128 NM| MSB = 180            |                         |
 IN  |              |                      |                         | ODD|
 3   | <-- RG --> | <-------------- AZIMUTH ---------------> |PRTY|
     | MSB = 180                           |        LSB = .088       |
 OUT |                                     |                         | ODD|
     | <---------------------- AZIMUTH ----------------------> |PRTY|
     |=====================================|=========================|
     |        LSB = .044 |  0 |  0 |  0 |  0 |  X    X    X    X |    |
 IN  |                   |    |CODE|    |RLAY|  1 | 1/2| 1/4| 1/8| ODD|
 4   | <----- AZ ----> |CONF|TRAN| FTF|MODE| <---- TIS ----> |PRTY|
     |  0 |  0    0 |  0 |  0 |  0 |  X    X |  X    X |  0 |  0 |    |
 OUT |    |          |    |    |    |  1 | 1/2| 1/4| 1/8| R/L| MTI| ODD|
     |AIMS|  S    S |DISC| M2 |M3/A| <---- TIS ----> |FLAG|FLAG|PRTY|
     |=====================================|=========================|
     |  1    1    1    0    1    0    1    0 |  1    1    1    0 |    |
 IN  |                                     |  7256 (OCT)             | ODD|
 5   | <---------------------- MODE 3/A ---------------------> |PRTY|
     |                                     |                         |    |
 OUT |                                     |  7256 (OCT)             | ODD|
     | <---------------------- MODE 3/A ---------------------> |PRTY|
     |=====================================|=========================|
     |                                     |                         |    |
 IN  |                                     |                         | ODD|
 6   | <------------------------ SFN ------------------------> |PRTY|
     |                                     |                         |    |
 OUT |                                     |  0000 (OCT)             | ODD|
     | <------------------------ MODE 2 ---------------------> |PRTY|
     |=====================================|=========================|
     |                                     |                         |    |
 IN  |                                     |                         | ODD|
 7   | <------------------------ MODE C ---------------------> |PRTY|
     |                                     |                         |    |
 OUT |                                     |                         | ODD|
     | <------------------------ MODE C ---------------------> |PRTY|
```

FIGURE 9. MODE S ATCRBS CPME REPORT AND CD-2/ASR-9 BCN REPORT FORMATS

FRM \ BIT	12	11	10	9	8	7	6	5	4	3	2	1	0
1 IN	1	1	1	0	1	0	0	0	0	0	1	0	ODD PRTY
	TEST	MESSAGE IDENT			3/A	C	IDNT	R/R	7700	7600	FAA	RDR	
OUT	1	1	1	0	1	0	0	0	0	0	1	1	ODD PRTY
	TEST	MESSAGE IDENT			3/A	C	IDNT	R/R	7700	7600	FAA	AF	
2 IN	0	0	1	1	1	0	0	0	0	0	0	0	ODD PRTY
	<---------- RANGE ---------->							56 NAUTICAL MILES					
OUT	1	1	1	0	0	0	0	0	0	0	0	0	ODD PRTY
	<---------- RANGE ---------->							56 NAUTICAL MILES					
3 IN	0	0	0	1	0	0	0	0	0	0	0	0	ODD PRTY
	<-- RG -->			<---------- AZIMUTH ---------->									
OUT	1	0	0	0	0	0	0	0	0	0	0	0	ODD PRTY
	<---------- AZIMUTH ---------->							180 DEGREES					
4 IN	0	0	0	0	0	0	0	0	X	X	X	X	ODD PRTY
	LSB = .044				CONF	CODE TRAN	FTF	RLAY MODE	1	1/2	1/4	1/8	
	<----- AZ ----->								<---- TIS ---->				
OUT	0	0	0	0	0	0	X	X	X	X	1	0	ODD PRTY
	<------ RUN LENGHT ----->						1	1/2	1/4	1/8	R/L FLAG	MTI FLAG	
							<---- TIS ---->						
5 IN	7777 (OCT)												ODD PRTY
	<---------- MODE 3/A ---------->												
OUT	7777 (OCT)												ODD PRTY
	<---------- MODE 3/A ---------->												
6 IN	0000 (OCT)												ODD PRTY
	<---------- SFN ---------->												
OUT	0000 (OCT)												ODD PRTY
	<---------- MODE 2 ---------->												
7 IN	0000 (OCT)												ODD PRTY
	<---------- MODE C ---------->												
OUT	0000 (OCT)												ODD PRTY
	<---------- MODE C ---------->												

FIGURE 10. MODE S BCN STROBE MESSAGE AND CD-2/ASR-9 BCN RTQC MESSAGE FORMATS

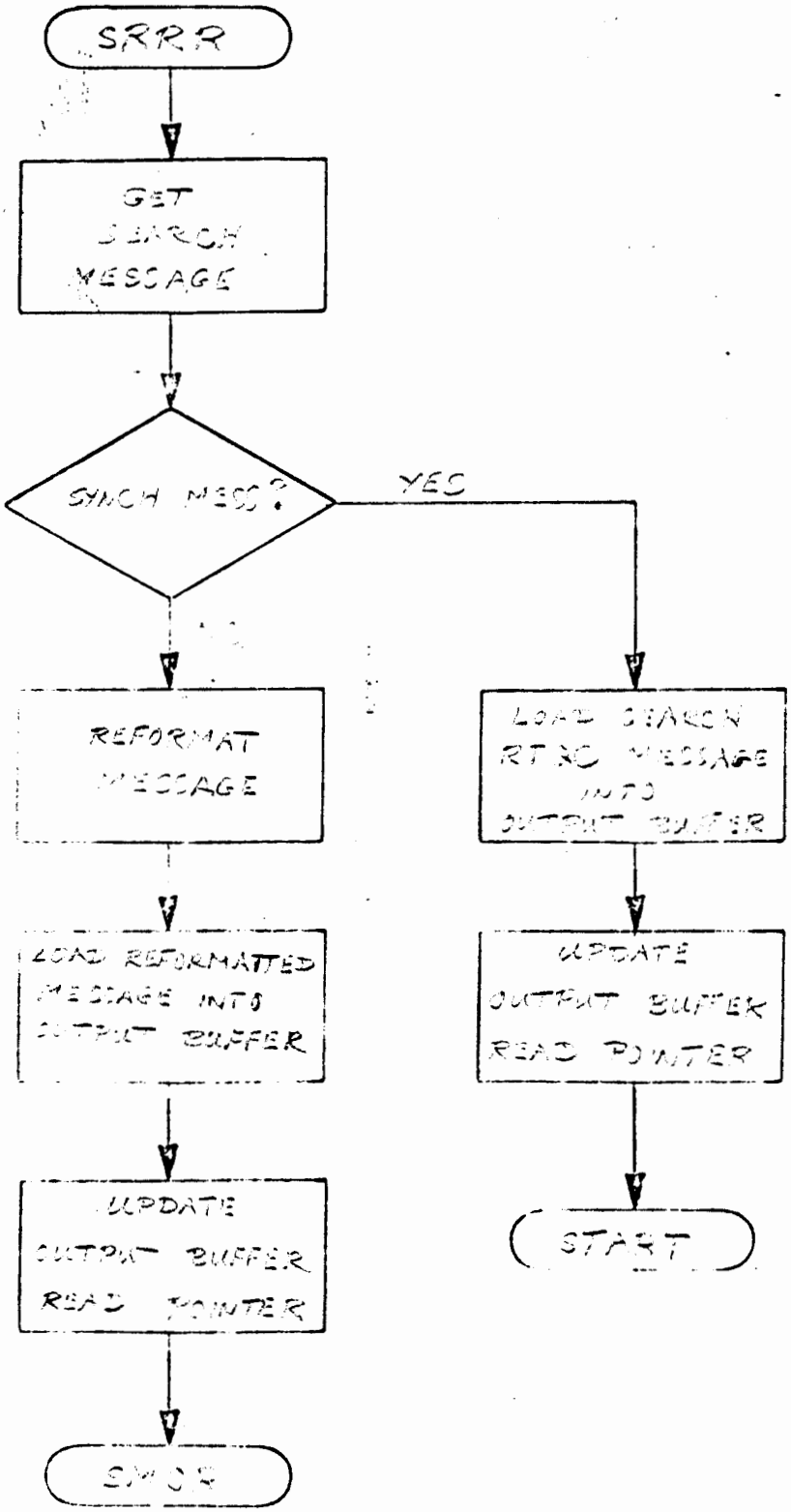

FIGURE 11. FLOWCHART FOR SEARH REPORT REFORMATTING ROUTINE

FRM \ BIT	12	11	10	9	8	7	6	5	4	3	2	1	0
1 IN	0	1	1	0	0	0	0	0	0	0	1	1	ODD PRTY
	TEST	MESSAGE IDENT			S	S	S	S	S	S	FAA	RDR	
1 OUT	0	0	0	1	1	0	1	1	0	0	1	1	ODD PRTY
	TEST	SEARCH HEADER									FAA	AF	
2 IN	MSB = 128 NM.												ODD PRTY
	<---------- RANGE ---------->												
2 OUT	MSB = 32 NM.								LSB = 1/64 NM.				ODD PRTY
	<---------- RANGE ---------->												
3 IN	LSB = 1/128 NM		MSB = 180										ODD PRTY
	<-- RG -->		<---------- AZIMTUH ---------->										
3 OUT	MSB = 190								LSB = .088				ODD PRTY
	<---------- AZIMUTH ---------->												
4 IN	LSB = .044				0	0	X	X	X	X	X	X	ODD PRTY
	<----- AZ ---->				AIMS	S	4	2	1	1/2	1/4	1/8	
							<---- TIME-IN-STORAGE --->						
4 OUT	0	0	0	X	X	X	X	X	X	X	0	0	ODD PRTY
	AIMS	S	CORR FLAG	QT	CONF		1	1/2	1/4	1/8	S	MTI FLAG	
							<---- TIS ---->						
5 IN	<------ DOPPLER #1 ----->						<------ DOPPLER #2 ----->						ODD PRTY
5 OUT	<---------- IDLE ---------->												EVEN PRTY
6 IN	<---------- SFN ---------->												ODD PRTY
6 OUT	<---------- IDLE ---------->												EVEN PRTY
7 IN	X	X	X	X	X	X			0	1/0	1	0	ODD PRTY
	QT		<---- CONF --->				FTF	GF	S				
7 OUT	<---------- IDLE ---------->												EVEN PRTY

FIGURE 12. MODE S SEARCH REPORT AND CD-2/ASR-9 SEARCH REPORT FORMATS

```
\ BIT¦ 12 ¦ 11 ¦ 10 ¦  9 ¦  8 ¦  7 ¦  6 ¦  5 ¦  4 ¦  3 ¦  2 ¦  1 ¦  0 ¦
 \   ¦    ¦    ¦    ¦    ¦    ¦    ¦    ¦    ¦    ¦    ¦    ¦    ¦    ¦
FRM \
     ¦  0 ¦  1    1    0 ¦  0    0    0    0 ;  0    0 ¦  1 ¦  1 ¦    ¦
 IN  ¦    ¦                ¦                 ;         ¦    ¦    ¦ ODD¦
 1   ¦    ¦ MESSAGE IDENT¦  S    S    S    S ;  S    S ¦ FAA¦ RDR¦PRTY¦
     ¦  1 ¦  0    0    1 ¦  0    0    1    0 ;  0    0 ¦  1 ¦  1 ¦    ¦
 OUT ¦    ¦                ¦                 ;         ¦    ¦    ¦ ODD¦
     ¦TEST¦ <--------  SEARCH RTQC HEADER  ----------> ¦ FAA¦ AF ¦PRTY¦
     ¦=================================================================¦
     ¦  1    1    1    1    1    1    1    1 ;  1    1    1    1 ¦    ¦
 IN  ¦ MSB = 128 NM.                          ;                      ¦ ODD¦
 2   ¦ <-----------------------  RANGE  -----------------------> ¦PRTY¦
     ¦  1    1    1    0    0    0    0    0 ;  0    0    0    0 ¦    ¦
 OUT ¦ MSB = 32 NM.                           ;   LSB = 1/64 NM. ¦ ODD¦
     ¦ <-----------------------  RANGE  -----------------------> ¦PRTY¦
     ¦=================================================================¦
     ¦  1    1    1 ¦  0    0    0    0    0 ;  0    0    0    0 ¦    ¦
 IN  ¦LSB = 1/128 NM¦ MSB = 180 DEGREES      ;                      ¦ ODD¦
 3   ¦ <--  RG  --> ¦ <--------------  AZIMUTH  --------------> ¦PRTY¦
     ¦  0    0    0    0    0    0    0    0 ;  0    0    0    0 ¦    ¦
 OUT ¦                                        ;                      ¦ ODD¦
     ¦ <-----------------------  AZIMTUH  --------------------> ¦PRTY¦
     ¦=================================================================¦
     ¦                      ¦  0 ¦  0 ¦  X    X ;  X    X    X    X ¦    ¦
 IN  ¦        LSB = .044    ¦    ¦    ¦  4 ¦  2 ;  1 ; 1/2; 1/4; 1/8¦ ODD¦
 4   ¦ <-----  AZ  ----->¦AIMS¦  S ¦ <---  TIME-IN-STORAGE  ---> ¦PRTY¦
     ¦  0    0    0    0    0    0 ¦  X    X ;  X    X ¦  0    0 ¦    ¦
 OUT ¦                             ¦  1   1/2; 1/4  1/8¦         ¦ ODD¦
     ¦ <------ RUN LENGTH  ------> ¦ <----  TIS  ----> ¦  S    S ¦PRTY¦
     ¦=================================================================¦
     ¦                             ¦          ;                      ¦    ¦
 IN  ¦                             ¦          ;                      ¦ ODD¦
 5   ¦ <------  DOPPLER #1  -----> ¦ <------  DOPPLER #2  -----> ¦PRTY¦
     ¦                             ¦          ;                      ¦    ¦
 OUT ¦                                        ;                      ¦EVEN¦
     ¦ <-----------------------  IDLE  -----------------------> ¦PRTY¦
     ¦=================================;=================================¦
     ¦                                        ;                      ¦    ¦
 IN  ¦                                        ;                      ¦ ODD¦
 6   ¦ <-----------------------  SFN  -----------------------> ¦PRTY¦
     ¦                                        ;                      ¦    ¦
 OUT ¦                                        ;                      ¦EVEN¦
     ¦ <-----------------------  IDLE  -----------------------> ¦PRTY¦
     ¦=================================;=================================¦
     ¦          ¦                    ¦    ¦    ;  0    0    0    0 ¦    ¦
 IN  ¦          ¦                    ¦    ¦    ;                      ¦ ODD¦
 7   ¦    QT    ¦ <---  CONF  ----> ¦ FTF¦ GF ;  S    S    S    S ¦PRTY¦
     ¦                                        ;                      ¦    ¦
 OUT ¦                                        ;                      ¦EVEN¦
     ¦ <-----------------------  IDLE  -----------------------> ¦PRTY¦
```

FIGURE 13. MODE S SYNCH MESSAGE AND
CD-2/ASR-9 SEARCH RTQC MESSAGE FORMATS

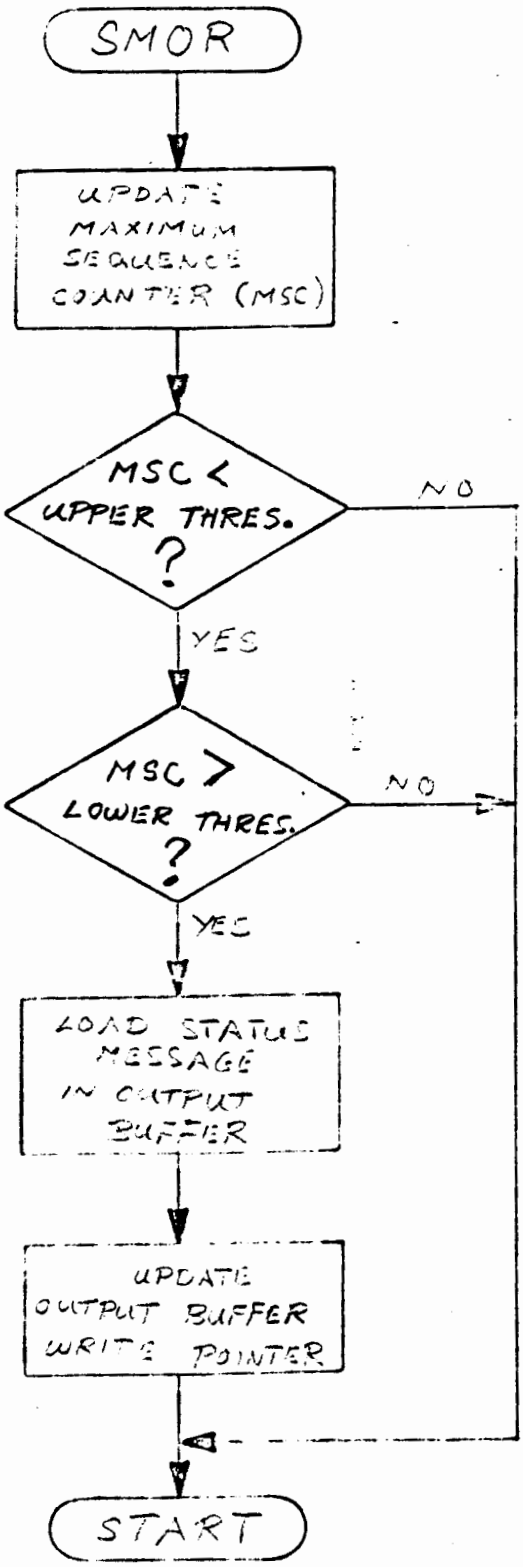

FIGURE 14. FLOWCHART FOR STATUS MESSAGE OUTPUT ROUTINE

FAA WJH Technical Center
00092661

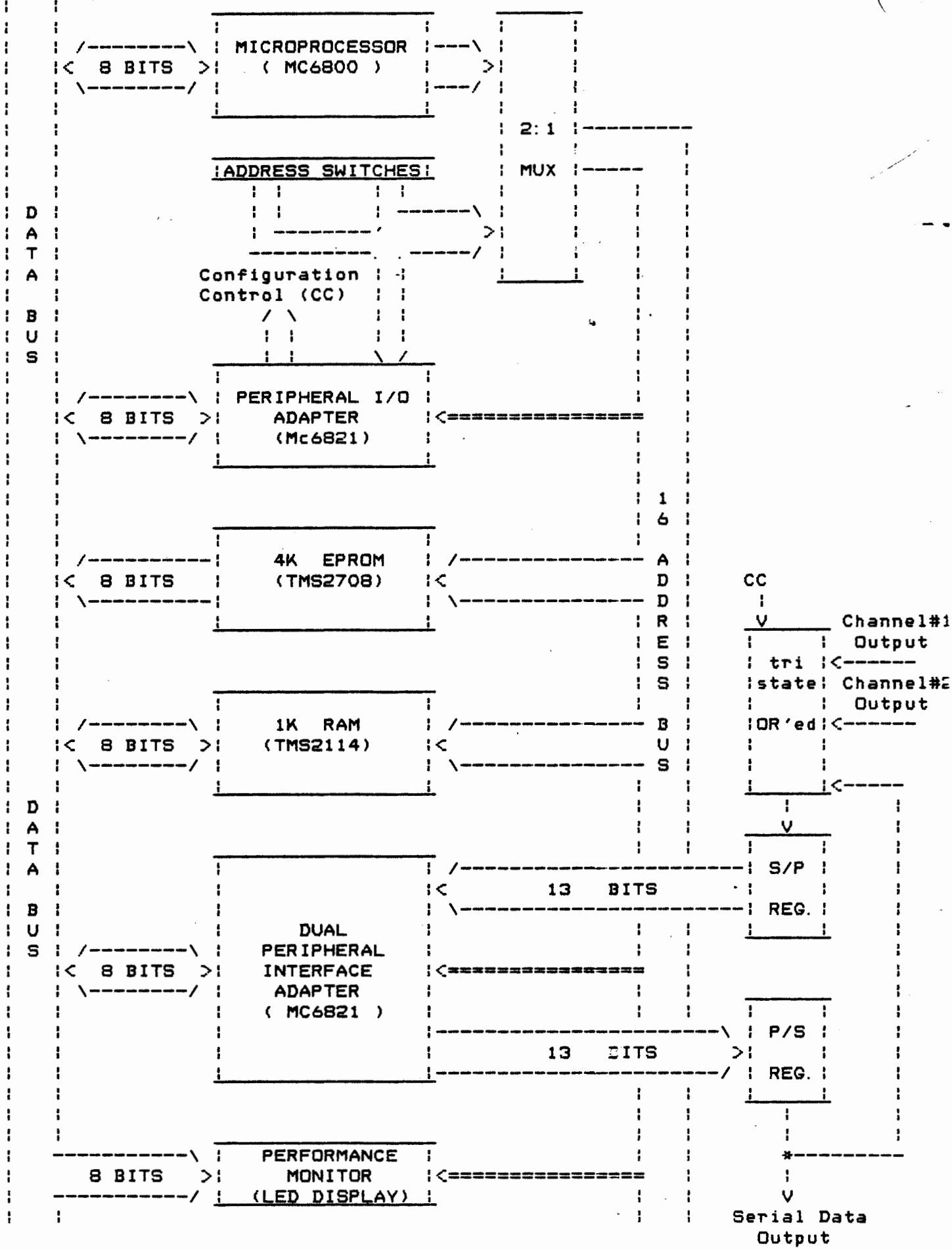

FIGURE 15. FUNCTIONAL BLOCK DIAGRAM OF THE SIMULATION AND DIAGNOSTIC MODULE

The operator interacts with this module through 16 address switches and an address mode select switch located on the front panel. The operator can select either the normal mode, the by-pass mode, or the test mode of operation. In the normal mode the channels are configured to accept external clock signals from the modems and receive external data from the Mode S via the front panel connecters. In the by-pass mode the channels are logically removed to allow Mode S surveillance data to pass to the modems unmodified. In the test mode both channels receive simulated modem clock and simulated Mode S surveillance data from the SDM and transmit reformatted surveillance data back to the SDM. The SDM and channel input and output lines are automatically configured for the appropriate test routine selected. When each test routine is completed the equipment automatically reconfigures back to the normal mode.

The serial data reformatter can generate target scenarios providing a fourth mode of operation. The target scenario is resident in PROMs which replace the SDM PROMs housing the diagnostic routines. The SDM transmits reports to the channels defined by the target scenario. These reports are in the format specified in report No. FAA-RD-80-14. The target reports are reformatted by the channels and then appropriately disseminated.

<u>SDM DIAGNOSTIC SOFTWARE.</u> Six diagnostic and simulation programs currently make up the test package for the serial data reformatter equipment. The six test programs are as follows:

Continuous Message Dissemination (CMD)
Status Dissemination Check (SDC)
SDM Verification Routine (SVR)
Channel #1 Verification Routine (CVR-1)
Channel #2 Verification Routine (CVR-2)
Verification Routine Check (VRC)

All six programs are similar in operating principle. Each program transmits a predetermined data set either to a channel or back to the SDM, and receives returning data. The data received is then compared to a data set that is expected. Program listings for the SDM are provided in appendix D.

Each program builds a transmit file from two available transmit data sets. Each transmit set is divided into eight blocks, each block contains eight frames. A Mode S surveillance message succeeded by an idle character is stored in each block except for the first block which has all idle characters. Table 1 shows the seven messages in the order they appear in transmit data set 1. Table 2 shows the reformatted message types that correspond to table 1. This table is refered to as the lookup data set and consists of seven blocks.

Transmit data set 2 contains similar messages to those of transmit data set 1. However each message in this set either has incorrect parity, an inproper header, or different message content. Table 3 lists the messages along with their changes in the order in which they appear in the transmit set. This set is used only by VRC.

Table 1. Transmit Data Set #1

Block No.	Mode S Message Type
1	Idle Characters
2	ATCRBS CPME Report
3	Special Beacon Strobe Message
4	First Regular Beacon Report
5	First Regular Search Report
6	Azimuth Synchronization Message
7	Second Regular Search Report
8	Second Regular Beacon Report

Table 2. Lookup Data Set

Block No.	CD-2/ASR-9 Message Type
1	Regular Beacon Report
2	Beacon RTQC Report
3	First Regular Beacon Report
4	First Regular Search Report
5	Search RTQC Report
6	Second Regular Search Report
7	Second Regular Beacon Report

Table 3. Transmit Data Set #2

Block No.	Mode S Message Type
1	Idles preceeding Weather Message
2	ATCRBS CPME Report/Frame 4 bad parity
3	Special Beacon Strobe Message/Diff. time-in-storage
4	First Regular Beacon Report/Frame 2 bad parity
5	First Regular Search Report/Diff. Azimuth
6	Azimuth Synchronization Message/Diff. time-in-storage
7	Second Regular Search Report/Header incorrect
8	Second Regular Beacon Report/Diff. range & 3/A code

1. Continuous Message Dissemination - The purpose of this test routine was to primarily assist in debugging system hardware and software. When executed the CMD continuously transmits a single message to both channels and to itself. Each message transmitted is seperated by an idle character. The particular message is selected from transmit data set 1 via address switches 5, 6, and 7. This high repetition mode enables the use of an osciloscope to quickly probe hardware problems or the use of a logic analyzer for software debugging.

2. Status Dissemination Check - The purpose of the SDC was initially to verify the operation of a software implemented 15-bit maximum sequence generator. It is also used to verify the upper and lower threshold settings which determine the rate status messages are generated by each channel. The SDC accomplishes this by continuously transmitting the first regular Mode S search message to channel #1 and monitoring its output. While the SDC is running the number of messages being reformatted or the number of status messages being received can be monitored on the SDM LED display. The information displayed is selected via address switches 5, 6, and 7. The routine automatically terminates when one complete sequence by the maximum sequence generator is detected. The number of reformatted messages counted represents the maximum sequence count and the ratio of the number of status messages counted to the number of reformatted messages counted represents the status dissemination rate.

3. SDM Verification Routine - The purpose of the SVR test is to verify the operational status of the SDM. The routine accomplishes this by transmitting the first 2 blocks of transmit data set 1 through the parallel-to-serial register and immediately receiving the data back through the serial-to-parallel register. The operational integrity of the SDM is verified by comparing the data transmitted with the data received. For this test both data sets should be identical.

4. Channel #1 Verification Routine - The purpose of CVR-1 is to verify the operational status of channel #1. The routine accomplishes this by transmitting the data in transmit data set 1 to channel #1 and storing the reformatted data returned from channel #1 in RAM. The stored data is then compared to data in the lookup data set. The routine will provide general information based on the results of the comparison. The information provided, such as, which message or messages were formatted incorrectly or were not received, is stored in a system status file resident in RAM.

5. Channel #2 Verification Routine - The CVR-2 verifies the operational status of Channel #2 by performing the same functions as CVR-1.

6. Verification Routine Check - The purpose of VRC is to verify the integrity of the fault detection routines of the channel verification programs. This program is basically the same as the channel verification programs except that one message from transmit set 2 replaces its corresponding message in transmit set 1 when the transmit file is built. The particular fault massage is selected via

the address switches 5, 6, and 7. The fault messages are designed for two reasons. The first reason is to exercise various routines in channel software, such as, detecting messages with incorrect parity, purging weather messages, and resynchronizing to the input data stream after receiving an illegal message. The second reason is to exercise various fault determining rouitnes of the verification programs, such as, identifying missing messages or identifying incorrectly formatted messages.

SDM SCENARIO SOFTWARE. One target scenario routine is currently available. The purpose of this scenario routine is to assist in debugging ARTS IIIA software by providing a known surveillance input to the ARTS IIIA. While this routine is running the serial data reformatter equipment disseminates two real time quality control reports each scan, thereby simulating a scan rate of 4.7 seconds. This routine generates surveillance reports in a pattern of two rings of targets. Each ring contains 16 target reports equally seperated in azimuth. One ring consists of beacon reports at a range of 45 nautical miles. The second ring consists of search reports at a range of 40 nautical miles. The operator has the option of disseminating the beacon reports and/or, the search reports via address switches 1 and 2, respectively.

SUMMARY.

The purpose for the serial data reformatter equipment is to support the test and evaluation of a prototype interface to be used with the implementation of the Mode S. In general, the reformatter consists of two serial reformatting channels which are connected between the two Mode S surveillance input/output ports and the digital side of two modems using four connecting cables which are provided. Beacon and search reports outputted by the Mode S are reformatted to the CD-2/ASR-9 format and then disseminated to the ARTS IIIA. A beacon RTQC report or a search RTQC report is generated each time a special beacon strobe message or an azimuth syncn message is received, respectively. These messages will be used by the ARTS IIIA to maintain azimuth synchronization as well as to check Mode S validity. In addition, status messages are randomly disseminated to the ARTS IIIA to demonstrate that the ARTS IIIA can receive and recognize such messages. The reformatter also contains a diagnostic package to aid in isolating internal hardware and software faults.

APPENDIX A

BASELINE FORMATS FOR THE MODE S/ARTS IIIA INTERFACE TESTS

May 18, 1982
REVISION-1

BIT CNT	12	11	10	9	8	7	6	5	4	3	2	1	0	
FLD CNT											1	1		
1	TEST	1	1	MODE 2	MODE 3/A	MODE C	IDENT	RADAR REINF	7700	7600	FAA	AF	PRTY	
	1	2	3	4	5	6	7	8	9	10	11#	12#	13	MSG BIT NO.
2	MSB 32 nmi	16	8	4	2	1	1/2	1/4	1/8	1/16	1/32	LSB 1/64 nmi	PRTY	
					R A N G E (12)									
	14	15	16	17	18	19	20	21	22	23	24	25	26	MSG BIT NO.
3	MSB 2048 ACP	1024	512	256	128	64	32	16	8	4	2	LSB 1 ACP	PRTY	
					A Z I M U T H (12)									
	27	28	29	30	31	32	33	34	34	34	37	38	39	MSG BIT NO.
4	AIMS PRES-ENT	MSB	LSB	DIS-CRETE	MODE 2 "X"	MODE 3/A"X"	MSB 1 SEC	1/2	1/4	LSB 1/8 SEC	0 R/L FLAG	MTI FLAG	PRTY	
		AIMS CODE (2)					TIME IN STORAGE (4)							
	40	41	42	43	44	45	46	47	48	49	50	51	52	MSG BIT NO.

Beacon Target Message Format (Part 1)

May 14, 1982

BIT CNT	12	11	10	9	8	7	6	5	4	3	2	1	0	
FLD CNT														
5	A4	A2	A1	B4	B2	B1	C4	C2	C1	D4	D2	D1	PRTY	
					M O D E 3/A C O D E (12)									
	53	54	55	56	57	58	59	60	61	62	63	64	65	MSG BIT NO.
6	D4	C1	A1	C2	A2	C4	A4	B1	D1	B2	D2	B4	PRTY	
					M O D E 2 C O D E (12)									
	66	67	68	69	70	71	72	73	74	75	76	77	78	MSG BIT NO.
7	SIGN 0=+ 1=-	102400	51200	25600	12800	6400	3200	1600	800	400	200	100	PRTY	
				M O D E C A L T I T U D E (11)										
	79	80	81	82	83	84	85	86	87	88	89	90	91	MSG BIT NO.

Beacon Target Message Format (Part 2)

May 18, 1982
REVISION-1

BIT CNT	12	11	10	9	8	7	6	5	4	3	2	1	0	
FLD CNT				0				0	0	0	1	1		
1	1	1	1	MODE 2	MODE 3/A	MODE C	IDENT	RADAR REINF	7700	7600	FAA	AF	PRTY	
	1	2	3	4	5	6	7	8	9	10	11	12#	13	MSG BIT NO.
2	MSB 32 nmi	16	8	4	2	1	1/2	1/4	1/8	1/16	1/32	LSB 1/64 nmi	PRTY	
	R A N G E (12)													
	14	15	16	17	18	19	20	21	22	23	24	25	26	MSG BIT NO.
3	MSB 2048 ACP	1024	512	256	128	64	32	16	8	4	2	LSB 1 ACP	PRTY	
	A Z I M U T H (12)													
	27	28	29	30	31	32	33	34	34	34	37	38	39	MSG BIT NO.
4	0	0	0	0	0	0					1	0		
	MSB 64 ACP	32	16	8	4	LSB 2 ACP	MSB 1 SEC	1/2	1/4	LSB 1/8 SEC	R/L FLAG	MTI FLAG	PRTY	
	BEACON RUNLENGTH REPORTING (6)						TIME IN STORAGE (4)							
	40	41	42	43	44	45	46	47	48	49	50	51	52	MSG BIT NO.

Beacon RTQC Message Format (Part 1)

May 14, 1982

BIT CNT	12	11	10	9	8	7	6	5	4	3	2	1	0	
FLD CNT														
5	A4	A2	A1	B4	B2	B1	C4	C2	C1	D4	D2	D1	PRTY	
					M O D E 3/A C O D E (12)									
	53	54	55	56	57	58	59	60	61	62	63	64	65	MSG BIT NO.
6	D4	C1	A1	C2	A2	C4	A4	B1	D1	B2	D2	B4	PRTY	
					M O D E 2 C O D E (12)									
	66	67	68	69	70	71	72	73	74	75	76	77	78	MSG BIT NO.
7	SIGN 0=+ 1=-	102400	51200	25600	12800	6400	3200	1600	800	400	200	100	PRTY	
				M O D E C A L T I T U D E (11)										
	79	80	81	82	83	84	85	86	87	88	89	90	91	MSG BIT NO.

Beacon RTQC Message Format (Part 2)

May 18, 1982
REVISION-1

BIT CNT	12	11	10	9	8	7	6	5	4	3	2	1	0	
FLD CNT											1	1		
1	TEST	0	0	1	1	0	1	1	0	0	FAA	AF	PRTY	
	1	2	3	4	5	6	7	8	9	10	11#	12#	13	MSG BIT NO.
2	MSB 32 nmi	16	8	4	2	1	1/2	1/4	1/8	1/16	1/32	LSB 1/64 nmi	PRTY	
						RANGE (12)								
	14	15	16	17	18	19	20	21	22	23	24	25	26	MSG BIT NO.
3	MSB 2048 ACP	1024	512	256	128	64	32	16	8	4	2	LSB 1 ACP	PRTY	
						AZIMUTH (12)								
	27	28	29	30	31	32	33	34	34	34	37	38	39	MSG BIT NO.
4	0 AIMS PRES-ENT	0 MSB AIMS CODE	RADAR INDI-CATOR	QUAL-ITY BIT	MSB	LSB	MSB 1 SEC	1/2	1/4	LSB 1/8 Sec	0	0 MTI FLAG	PRTY	
					CONFIDENCE(2)		TIME IN STORAGE (4)							
	40	41	42#	43	44	45	46	47	48	49	50	51	52	MSG BIT NO.

Search Message Format

May 18, 1982
REVISION-1

BIT CNT	12	11	10	9	8	7	6	5	4	3	2	1	0	
FLD CNT											1	1		
1	1	0	0	1	0	0	1	0	0	0	FAA	AF	PRTY	
	1	2	3	4	5	6	7	8	9	10	11	12#	13	MSG BIT NO.
2	MSB 32 nmi	16	8	4	2	1	1/2	1/4	1/8	1/16	1/32	LSB 1/64 nmi	PRTY	
						RANGE (12)								
	14	15	16	17	18	19	20	21	22	23	24	25	26	MSG BIT NO.
3	MSB 2048 ACP	1024	512	256	128	64	32	16	8	4	2	LSB 1 ACP	PRTY	
						AZIMUTH (12)								
	27	28	29	30	31	32	33	34	34	34	37	38	39	MSG BIT NO.
4	0 MSB 256 ACP	0 128	0 64	0 32	0 16	0 LSB 8 ACP	MSB 1 SEC	1/2	1/4	LSB 1/8 SEC	0	0	PRTY	
		RUN LENGTH (6)					TIME IN STORAGE (4)							
	40	41	42	43	44	45	46	47	48	49	50	51	52	MSG BIT NO.

Search RTQC Message Format

May 18, 1982
REVISION-1

BIT CNT	12	11	10	9	8	7	6	5	4	3	2	1	0	
FLD CNT											1	1		
1	TEST	0	0	0	1	1	0	0	0	0	FAA	AF	PRTY	
	1	2	3	4	5	6	7	8	9	10	11#	12#	13	MSG BIT NO.
	0	0	0	0	0	0	0	0	0	0	0	0		
2													PRTY	
	14	15	16	17	18	19	20	21	22	23	24	25	26	MSG BIT NO.
	0	0	0	0	0	0	0	0	0	0	0	0		
3													PRTY	
	27	28	29	30	31	32	33	34	34	34	37	38	39	MSG BIT NO.
	0	0	0	0	0	0	0	0	0	0	0	0		
4													PRTY	
	40	41	42	43	44	45	46	47	48	49	50	51	52	MSG BIT NO.

Status Message Format

May 14, 1982

BIT CNT	12	11	10	9	8	7	6	5	4	3	2	1	0	
FLD CNT														
0	0	0	0	1	1	1	1	1	1	1	1	1	1	
	1	2	3	4	5	6	7	8	9	10	11	12	13	MSG BIT NO.

Idle Message Format

APPENDIX B

DETAILED LOGIC SCHEMATICS
FOR THE
SERIAL DATA REFORMATTER EQUIPMENT

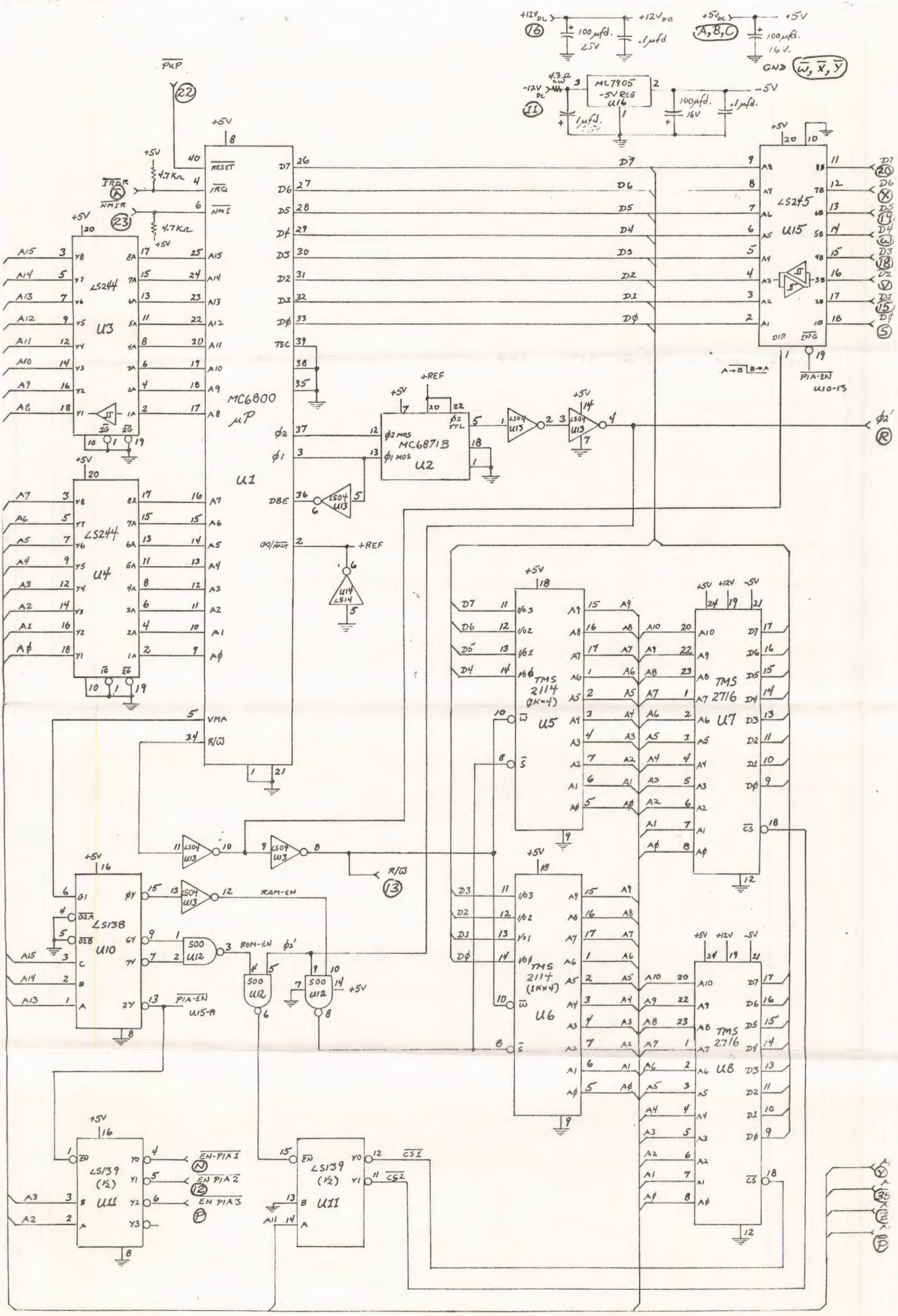
+12V DC
+12V DC
100 µfd. 25V
.1 µfd
+5V DC
+5V
100 µfd. 16V.
GND
-12V DC
4.3Ω 2W
MC7905 -5V REG U16
-5V
1 µfd.
100 µfd. 16V
.1 µfd.
PUP
IRQR
NMIR
4.7KΩ
+5V
RESET
IRQ
NMI
MC6800 µP
U1
LS244
U3
U4
MC6871B
U2
+REF
LS04 U13
U14 LS14
DBE
VMA
R/W
LS245
U15
DIR
ENG
PIA-EN
U10-13
A→B B→A
TMS 2114 (1K×4)
U5
U6
TMS 2716
U7
U8
LS138
U10
RAM-EN
ROM-EN
S00 U12
PIA-EN
U15-19
LS139 (1/2)
U11
EN-PIA1
EN PIA2
EN PIA3
CS1
CS2

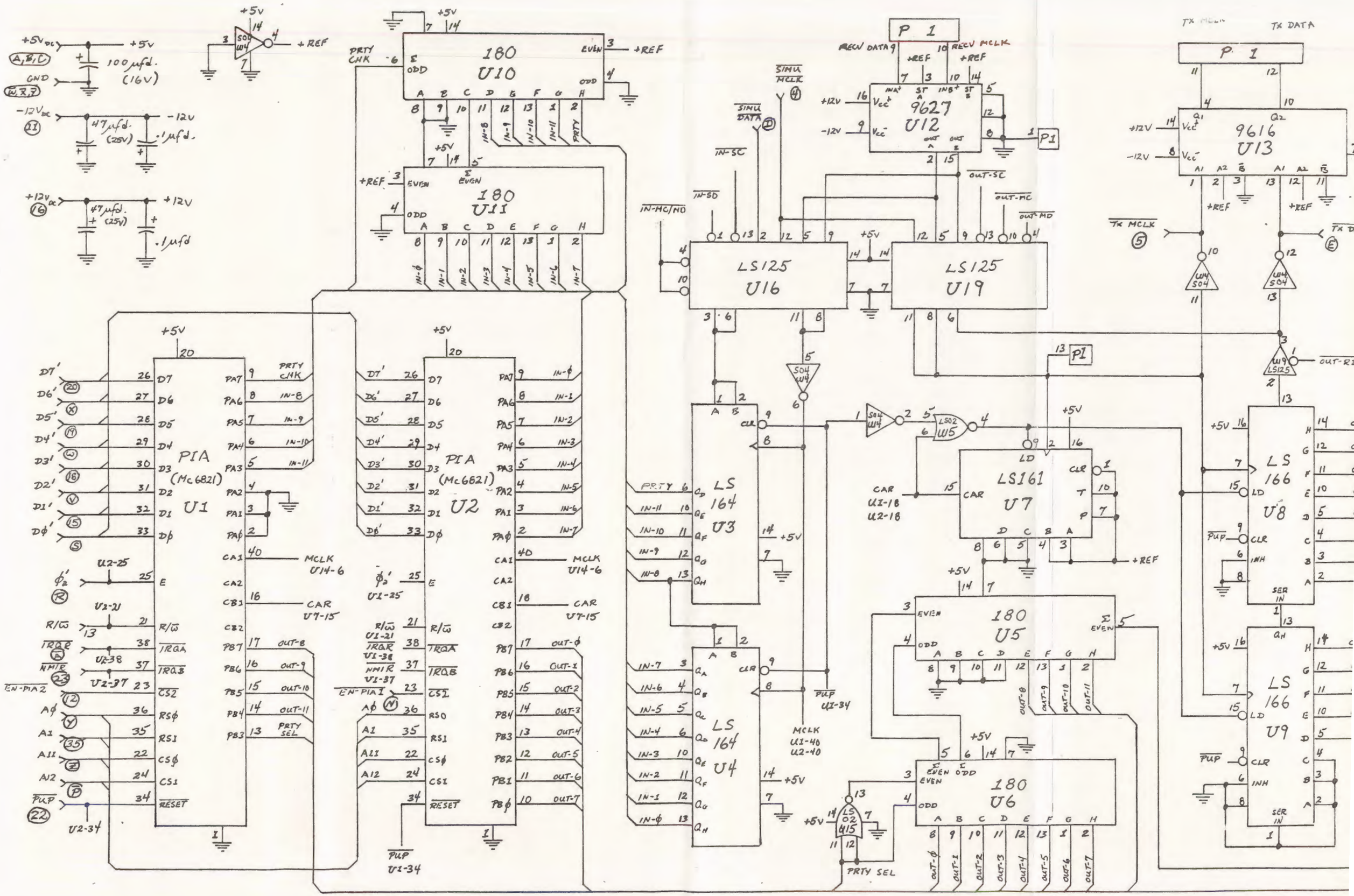

I/O PERIPHERAL CARD #1

NOTE: 3KΩ PULL-UP
RESISTER ON ALL
THREE CONTROL SIGNALS.

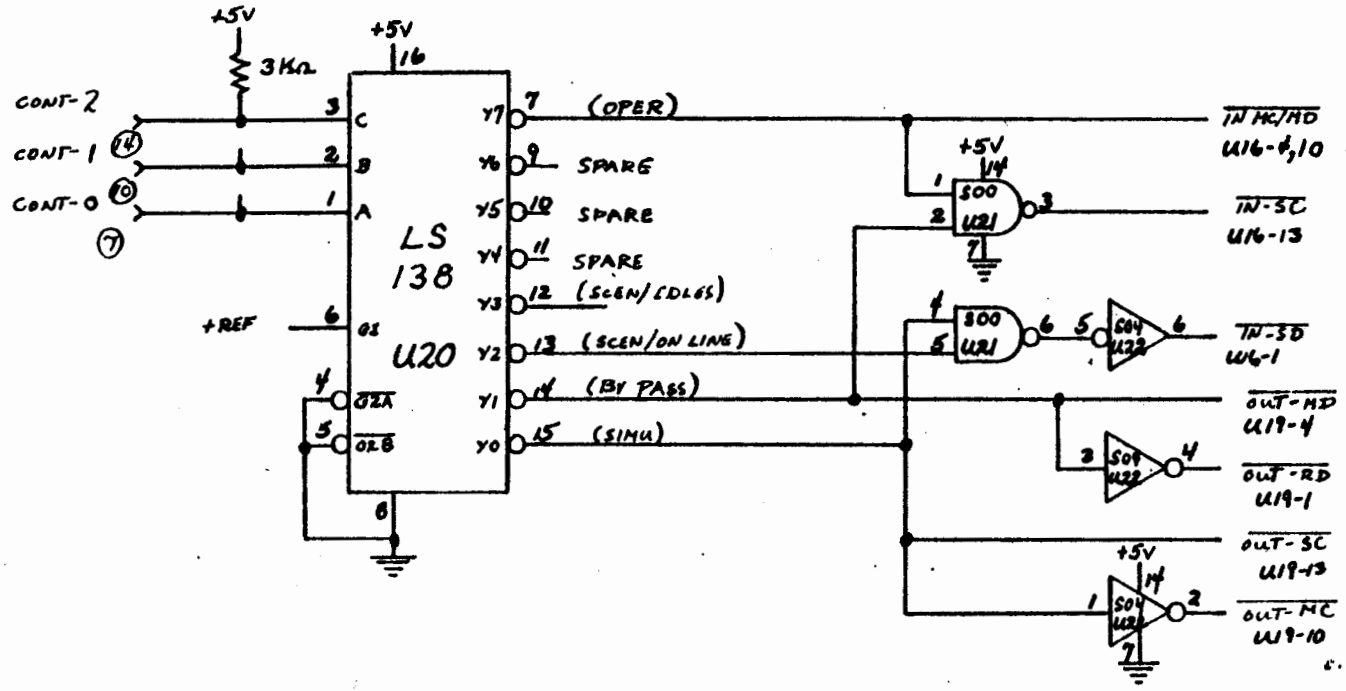

I/O PERIPHERAL CARD #1

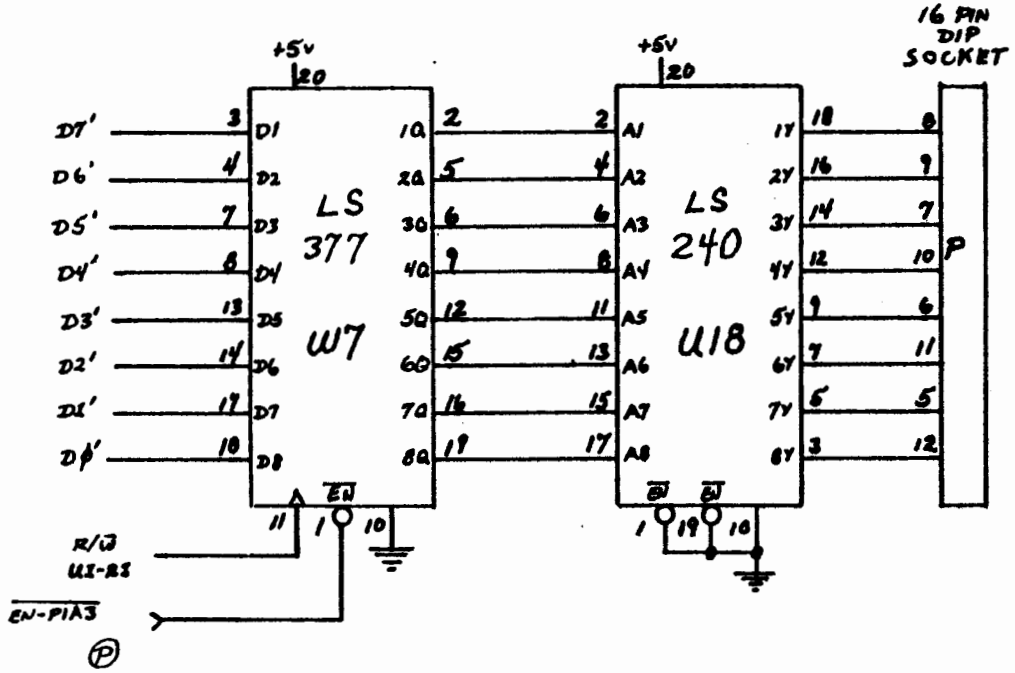

I/O PERIPHERAL, CARD #1

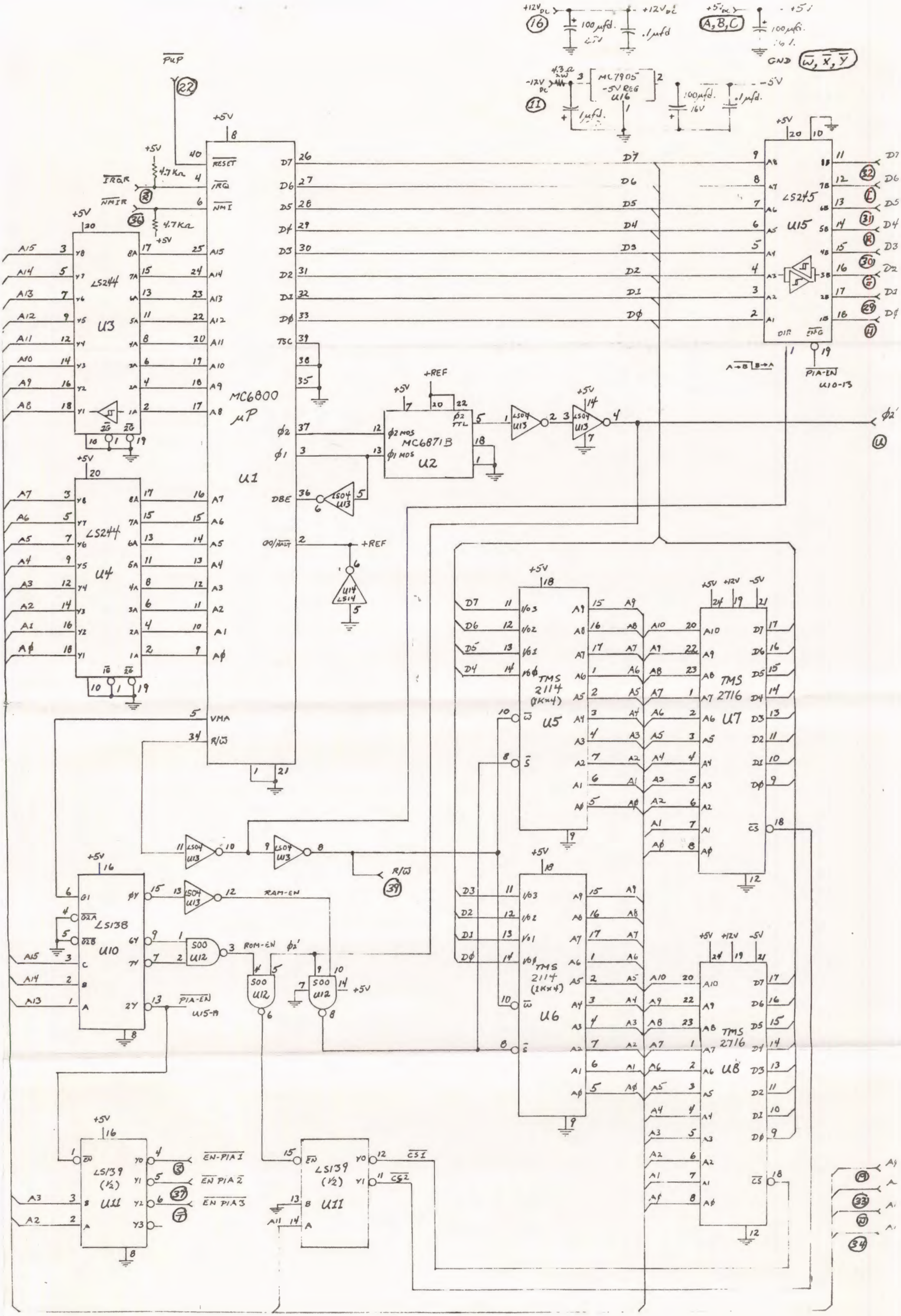
MC6800 μP
U1
U2
MC6871B
U3
U4
U5
U6
U7
U8
U10
U11
U12
U13
U14
U15
U16
LS244
LS245
LS138
LS139
TMS 2114 (1K×4)
TMS 2716
MC7905 -5V REG
RESET
IRQ
NMI
VMA
R/W
DBE
RAM-EN
ROM-EN
PIA-EN
EN-PIA1
EN PIA2
EN PIA3
CS1
CS2
+REF
GND

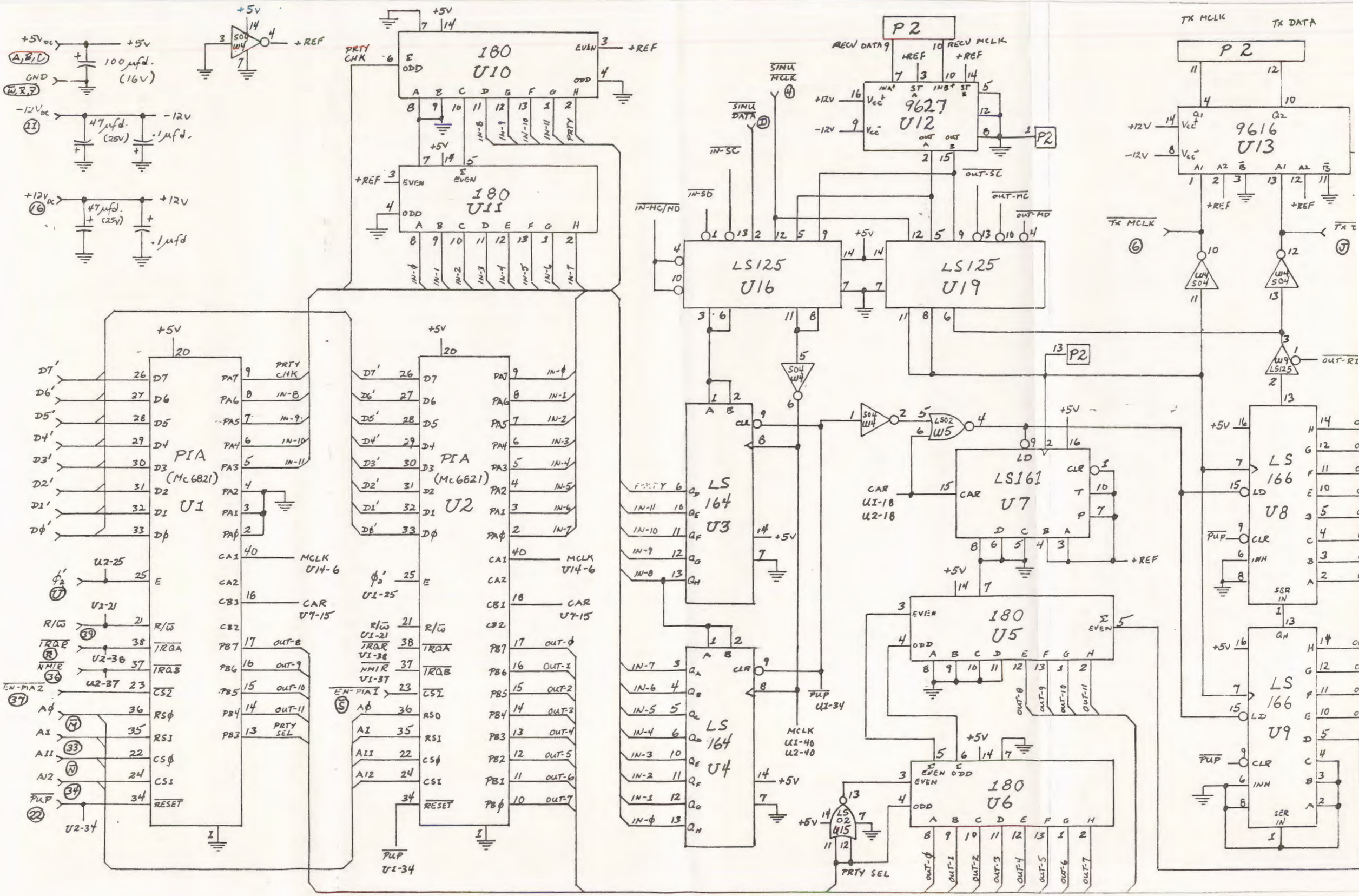
+5V DC
A,B,C
GND
W,X,Y
+5V
100 µfd. (16V)
-12V DC
Z
-12V
47 µfd. (25V)
.1 µfd.
+12V DC
16
+12V
47 µfd. (25V)
.1 µfd
+5V
SO4 W4
+REF
PRTY CHK
180 U10
EVEN
ODD
180 U11
PIA (Mc6821) U1
PIA (Mc6821) U2
MCLK U14-6
CAR U7-15
OUT-8
OUT-9
OUT-10
OUT-11
PRTY SEL
OUT-0
OUT-1
OUT-2
OUT-3
OUT-4
OUT-5
OUT-6
OUT-7
IN-0
IN-1
IN-2
IN-3
IN-4
IN-5
IN-6
IN-7
IN-8
IN-9
IN-10
IN-11
EN-PIA2
EN-PIA1
PUP
U2-34
U1-34
U2-25
U2-21
U2-36
U2-37
U1-21
U1-36
U1-37
P2
RECV DATA
RECV MCLK
SINU MCLK
SINU DATA
IN-SC
IN-SD
IN-MC/MD
OUT-SC
OUT-MC
OUT-MD
9627 U12
LS125 U16
LS125 U19
LS 164 U3
LS 164 U4
LS161 U7
180 U5
180 U6
LS 166 U8
LS 166 U9
9616 U13
TX MCLK
TX DATA
OUT-RI
LS02 W5
SO4 W4
W9 LS125
LS 02 415
CAR U1-18 U2-18
MCLK U1-40 U2-40

NOTE: 3KΩ PULL-UP
RESISTER ON ALL
THREE CONTROL SIGNALS.

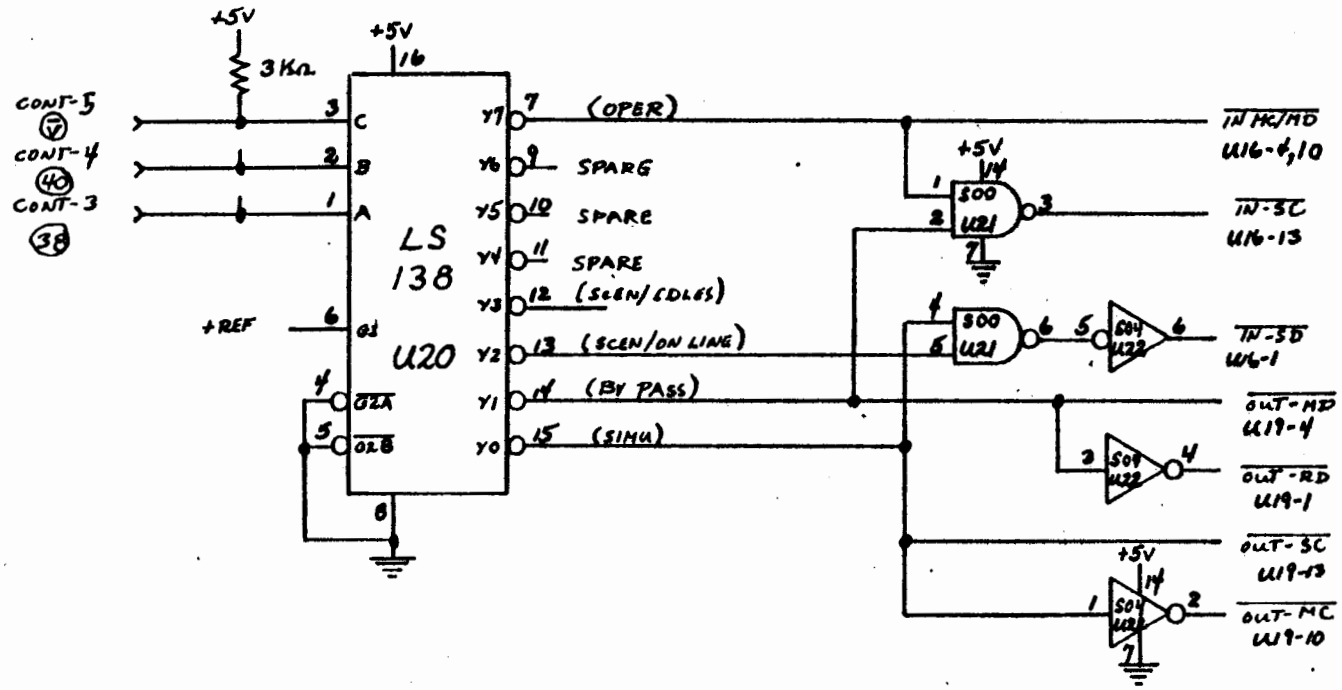

I/O PERIPHERAL CARD #2

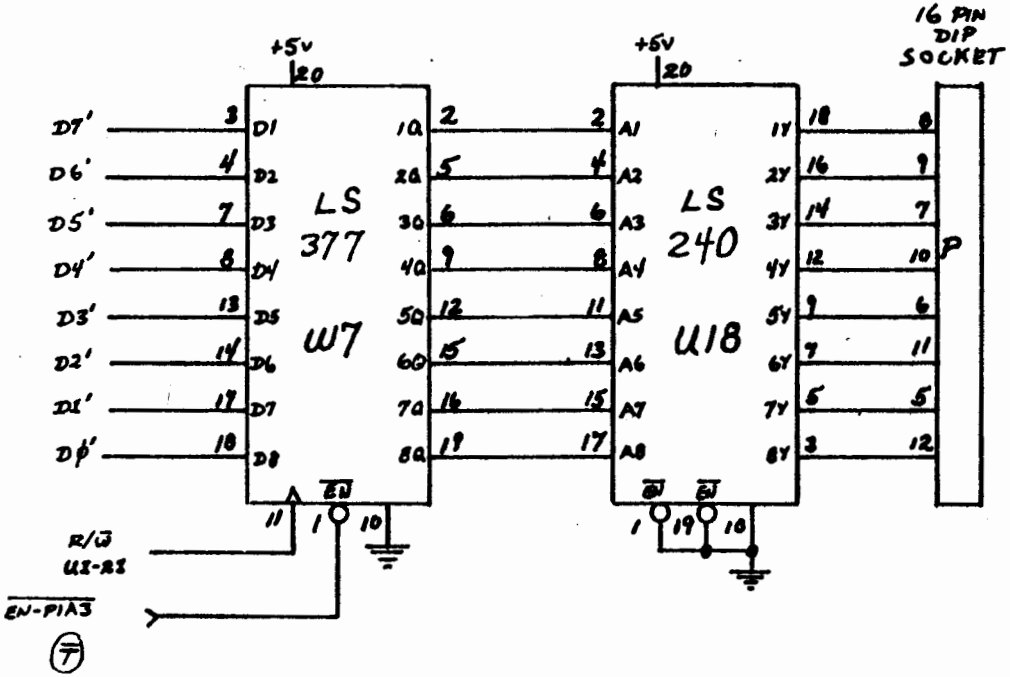

I/O PERIPHERAL CARD #2

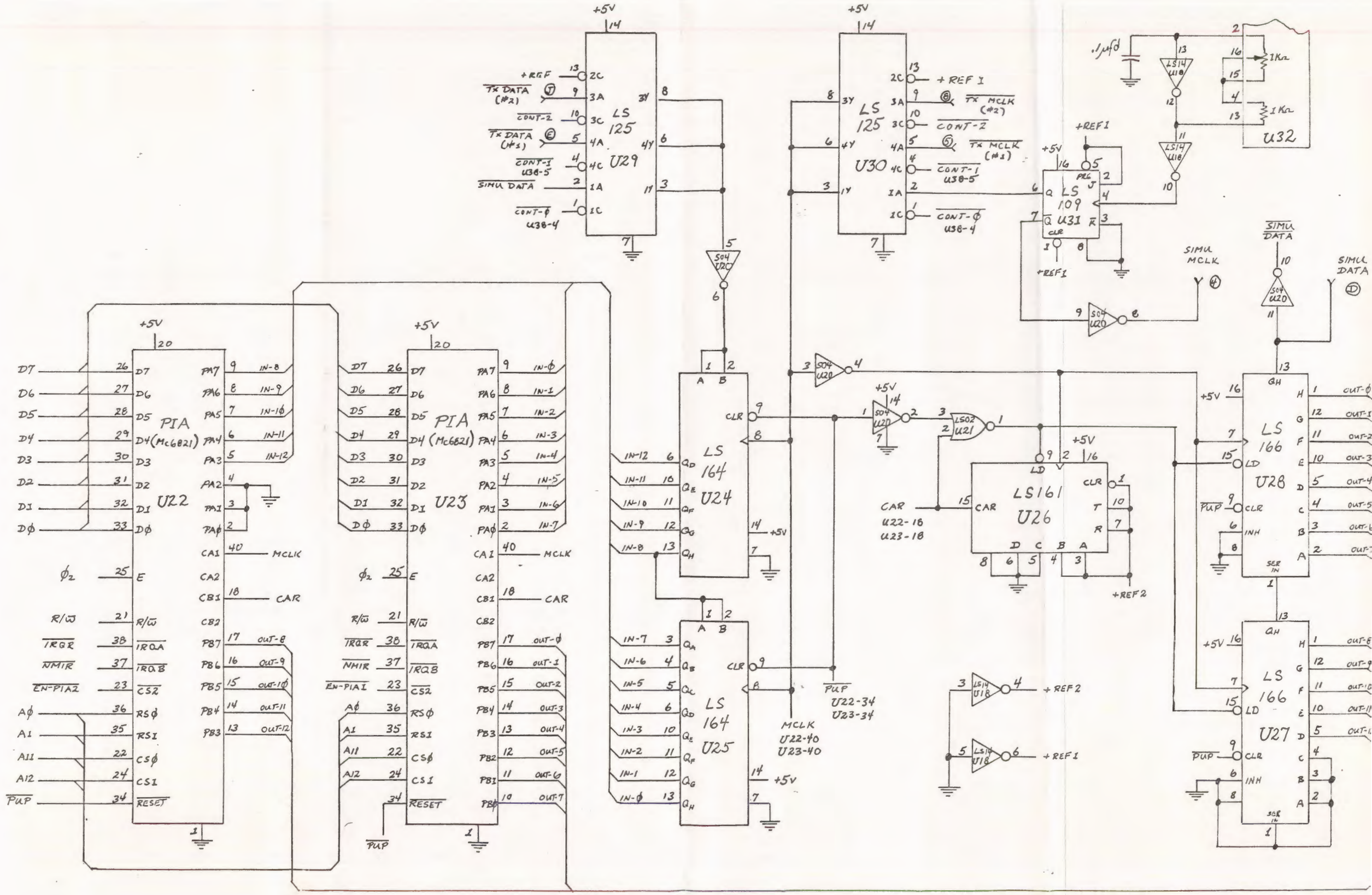

SIMULATION CARD

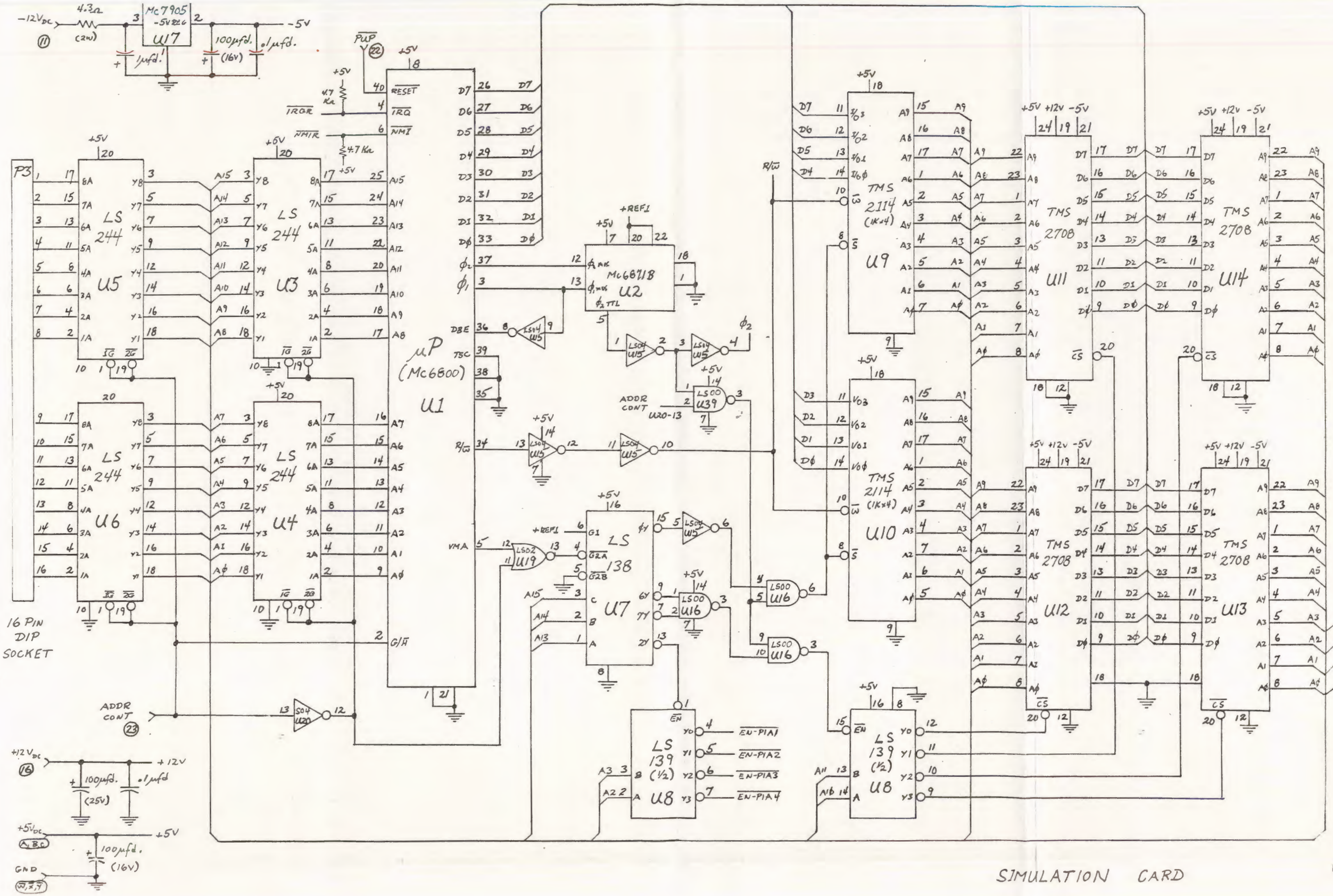

SIMULATION CARD

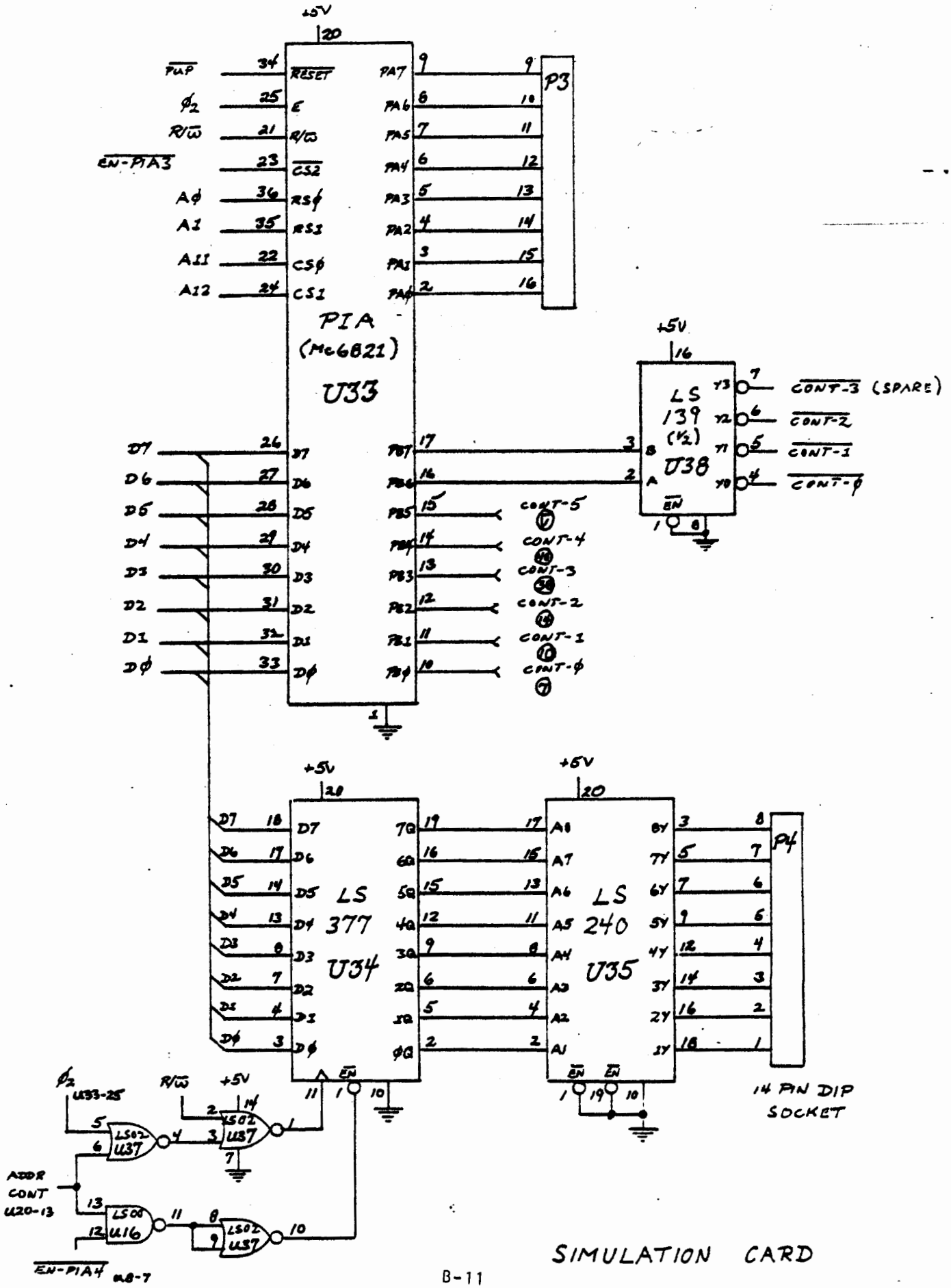
+5V
PIA
(MC6821)
U33
RESET
E
R/W
CS2
RS0
RS1
CS0
CS1
PA7
PA6
PA5
PA4
PA3
PA2
PA1
PA0
PB7
PB6
PB5
PB4
PB3
PB2
PB1
PB0
D7
D6
D5
D4
D3
D2
D1
D0
P3
LS 139 (1/2) U38
CONT-3 (SPARE)
CONT-2
CONT-1
CONT-0
CONT-5
CONT-4
CONT-3
CONT-2
CONT-1
CONT-0
LS 377 U34
LS 240 U35
P4
14 PIN DIP SOCKET
EN-PIA3
EN-PIA4
ADDR CONT U20-13
LS02 U37
LS00 U16
SIMULATION CARD

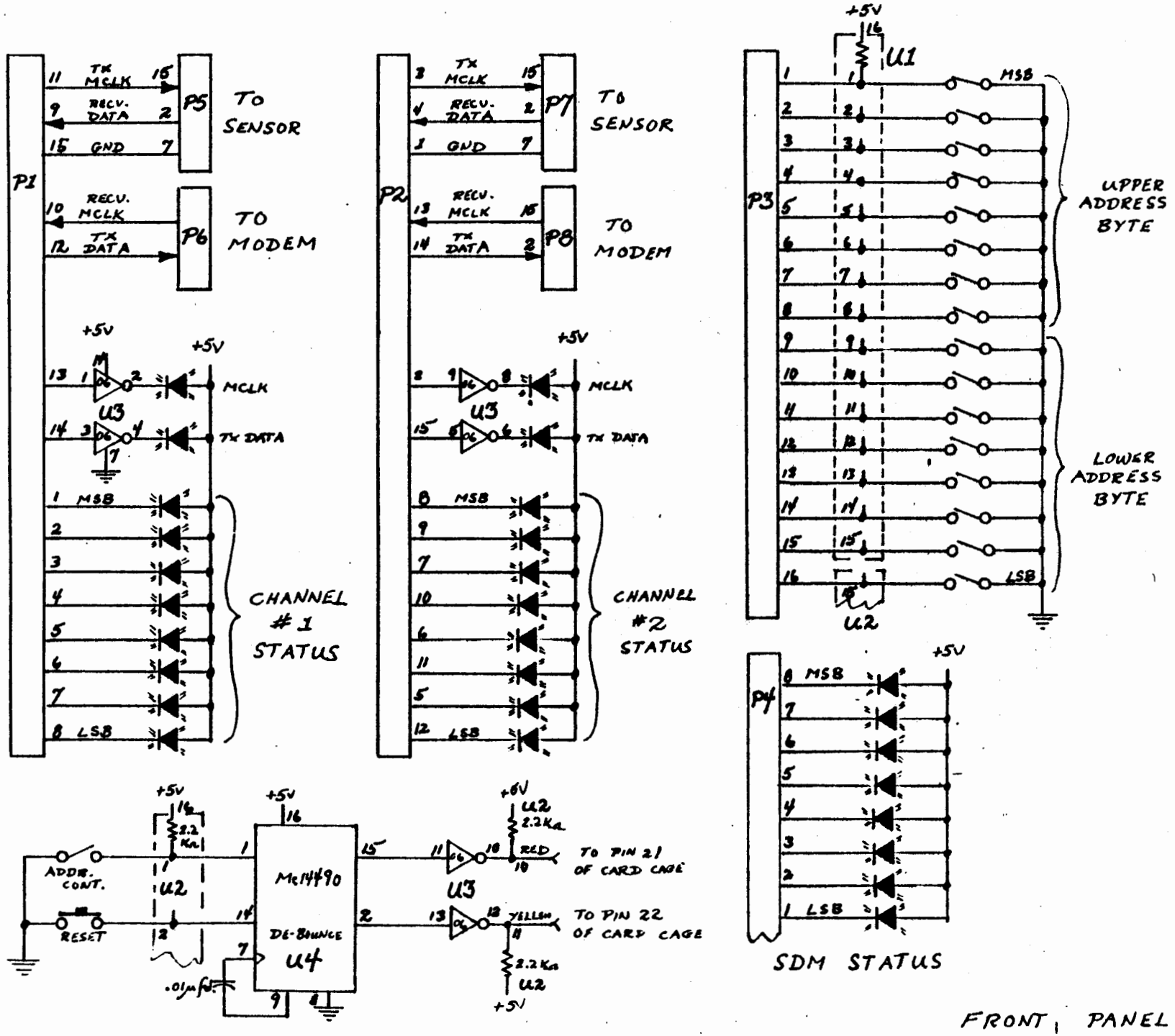
P1
TX MCLK
RECV. DATA
GND
P5
TO SENSOR
RECV. MCLK
TX DATA
P6
TO MODEM
+5V
U3
MCLK
TX DATA
MSB
LSB
CHANNEL #1 STATUS
P2
P7
TO SENSOR
P8
TO MODEM
CHANNEL #2 STATUS
P3
U1
U2
UPPER ADDRESS BYTE
LOWER ADDRESS BYTE
P4
SDM STATUS
ADDR. CONT.
RESET
.01μfd.
MC14490
DE-BOUNCE
U4
+6V
2.2KΩ
RED
YELLOW
TO PIN 21 OF CARD CAGE
TO PIN 22 OF CARD CAGE
FRONT PANEL

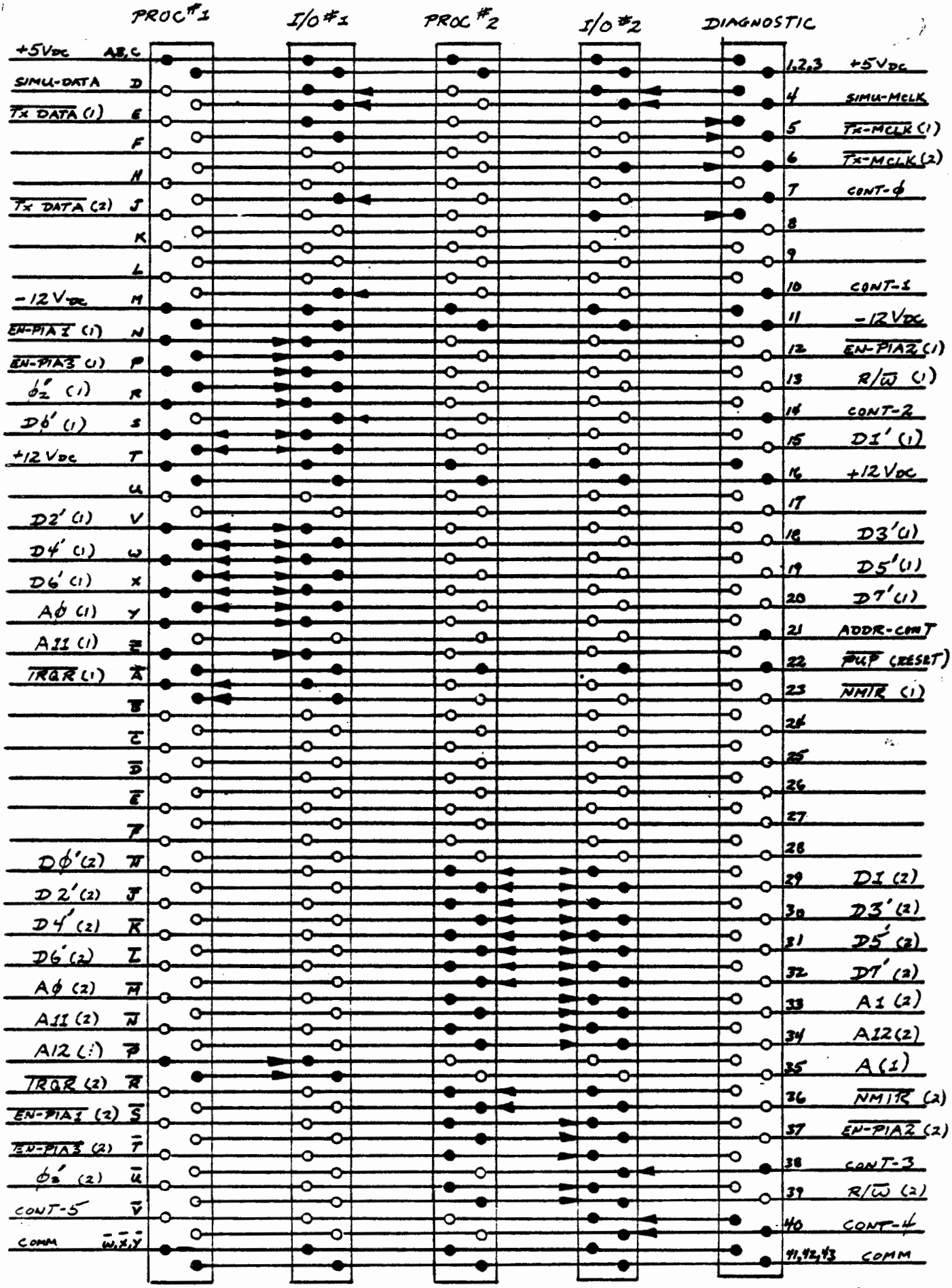

CARD CAGE BACKPLANE

APPENDIX C

PROGRAM LISTING FOR REFORMATTING CHANNELS

M68SAM IS THE PROPERTY OF MOTOROLA SPD, INC.
COPYRIGHT 1974 TO 1975 BY MOTOROLA INC

MOTOROLA M6800 CROSS ASSEMBLER, RELEASE 1.2

```
                        NAM    MODE     S/ARTS IIIA INTERFACING
                 ***************************************************************
                 *                                      9-07-82
                 *                                      TAPE: P100/18496
                 *   HARDWARE DEFINITION                USER.EFM.MT01
                 *
                 *
                 *   RAM        0000 - 03FF
                 *
                 *   PIA0       5800 - 5803
                 *
                 *   PIA1       5804 - 5807
                 *
                 *   DISPLAY    5808          SYSTEM MONITOR
                 *
                 *   PROM       C000 - CFFF   MEMORY ALLOCATION
                 *
                 *                 OUTPUT INTERRUPT ROUTINE    C800 - C8FF
                 *                 INPUT INTERRUPT ROUTINE     C900 - C9FF
                 *                 MAIN PROGRAM                CA00 - CFF7
                 *                 INTERRUPT VECTORS           CFF8 - CFFF
                 *
                 *
                 ***************************************************************
                 ******************    RAM DATA BUFFERS    ***********************
                 ***************************************************************
0000                    ORG    0
0000 0068        INBUF  RMB    $68      INPUT DATA BUFFER
0068 0068        OUTBUF RMB    $68      OUTPUT DATA BUFFER
                 ***************************************************************
                 ***************    RAM DATA BUFFER POINTERS    ******************
                 ***************************************************************
00D0 0000        WIN    FDB    0        INPUT BUFFER WRITE POINTER
00D2 0000        RIN    FDB    0        INPUT BUFFER READ POINTER
00D4 0000        WOT    FDB    0        OUTPUT BUFFER WRITE POINTER
00D6 0000        ROT    FDB    0        OUTPUT BUFFER READ POINTER
00D8 0000        RNG    FDB    0        RANDOM NO. GEN. SHIFT REGISTER
                 ***************************************************************
                 ****************     BUFFER FIXED BOUNDARIES    ****************
                 ***************************************************************
     0000        BEGIN  EQU    INBUF    INPUT BUFFER LOWER BOUNDARY
     0068        ENDIN  EQU    INBUF+104   INPUT BUFFER UPPER BOUNDARY
     0068        BEGOT  EQU    OUTBUF   OUTPUT BUFFER LOWER BOUNDARY
     00D0        ENDOT  EQU    OUTBUF+104   OUTPUT BUFFER UPPER BOUNDARY
                 ***************************************************************
                 ****************   BUFFER ADJUSTABLE BOUNDARIES   ***************
                 ***************************************************************
```

```
00048 00DA 00      DENDIN FCB    0        INPUT BUF. ADJ. UPPER BOUNDYARY
00049 00DB 00      DENDOT FCB    0        OUTPUT BUF. ADJ. UPPER BOUNDYARY
00050              ****************************************************************
00051              ************************   CONSTANTS   ************************
00052              ****************************************************************
00053       001F   IDLE0  EQU    $1F      UPPER BYTE OF IDLE CHARACTER
00054       00F8   IDLE1  EQU    $F8      LOWER BYTE OF IDLE CHARACTER
00055       00FF   RTQC0  EQU    $FF      UPPER BYTE OF TRIGGER 3/A CODE
00056       00F0   RTQC1  EQU    $F0      LOWER BYTE OF TRIGGER 3/A CODE
00057       000C   STAT0  EQU    $0C      UPPER BYTE OF STATUS HEADER
00058       0030   STAT1  EQU    $30      LOWER BYTE OF STATUS HEADER
00059       0001   WTHX0  EQU    $01      UPPER BYTE OF WEATHER HEADER
00060       0030   WTHXL  EQU    $30      LOWER BYTE OF WEATHER HEADER (LIGHT)
00061       0050   WTHXH  EQU    $50      LOWER BYTE OF WEATHER HEADER (HEAVY)
00062       003E   THRS1  EQU    $3E      UPPER BYTE OF DISSEMINATION THRESHOLD
00063       00DF   THRS2  EQU    $DF      LOWER BYTE OF DISSEMINATION THRESHOLD
00064              ****************************************************************
00065              **********************   TEMPERARY  STORAGE   ******************
00066              ****************************************************************
00067 00DC 0001    TEMP   RMB    1
00068 00DD 0002    SCRTCH RMB    2
00069              ****************************************************************
00070              **********************   FLAGS AND COUNTERS   ******************
00071              ****************************************************************
00072 00DF 00      BITCNT FCB    0        BIT COUNT OF FRAME
00073 00E0 00      WRDCNT FCB    0        NO. OF FRAMES PER MESSAGE
00074 00E1 00      MESCNT FCB    0        RESET PARITY ERROR TIME OUT
00075 00E2 00      SEQFLG FCB    0        SEQUENCE IN PROCESS
00076 00E3 00      SEQCOM FCB    0        SEQUENCE COMPLETE
00077 00E4 00      LOCKUP FCB    0        SYNCHRONIZED TO INPUT DATA STREAM
00078 00E5 00      STATUS FCB    0        SURVEILLANCE CHANNEL STATUS FLAGS
00079 00E6 00      EXCLOR FCB    0        OUTPUT OF SOFTWARE EXCLUSIVE-OR
00080              ****************************************************************
00081              ******************     PIA ADDRESSES     ********************
00082              ****************************************************************
00083       5800   PIAPA0 EQU    $5800
00084       5801   PIACA0 EQU    $5801
00085       5802   PIAPB0 EQU    $5802
00086       5803   PIACB0 EQU    $5803
00087       5804   PIAPA1 EQU    $5804
00088       5805   PIACA1 EQU    $5805
00089       5806   PIAPB1 EQU    $5806
00090       5807   PIACB1 EQU    $5807
00091              ****************************************************************
00092              ******************    SYSTEM MONITOR    ************************
00093              ****************************************************************
00094       5808   SYSMON EQU    $5808
00095              ****************************************************************
00096              *
00097              *
00098              *   SYSTEM STATUS AND ERRORS
00099              *
```

```
00048 00DA 00      DENDIN FCB    0        INPUT BUF. ADJ. UPPER BOUNDYARY
00049 00DB 00      DENDOT FCB    0        OUTPUT BUF. ADJ. UPPER BOUNDYARY
00050              ****************************************************************
00051              *************************   CONSTANTS   ************************
00052              ****************************************************************
00053       001F   IDLE0  EQU    $1F      UPPER BYTE OF IDLE CHARACTER
00054       00F8   IDLE1  EQU    $F8      LOWER BYTE OF IDLE CHARACTER
00055       00FF   RTQC0  EQU    $FF      UPPER BYTE OF TRIGGER 3/A CODE
00056       00F0   RTQC1  EQU    $F0      LOWER BYTE OF TRIGGER 3/A CODE
00057       000C   STAT0  EQU    $0C      UPPER BYTE OF STATUS HEADER
00058       0030   STAT1  EQU    $30      LOWER BYTE OF STATUS HEADER
00059       0001   WTHX0  EQU    $01      UPPER BYTE OF WEATHER HEADER
00060       0030   WTHXL  EQU    $30      LOWER BYTE OF WEATHER HEADER (LIGHT)
00061       0050   WTHXH  EQU    $50      LOWER BYTE OF WEATHER HEADER (HEAVY)
00062       003E   THRS1  EQU    $3E      UPPER BYTE OF DISSEMINATION THRESHOLD
00063       00DF   THRS2  EQU    $DF      LOWER BYTE OF DISSEMINATION THRESHOLD
00064              ****************************************************************
00065              **********************   TEMPERARY  STORAGE   *******************
00066              ****************************************************************
00067 00DC 0001    TEMP   RMB    1
00068 00DD 0002    SCRTCH RMB    2
00069              ****************************************************************
00070              **********************   FLAGS AND COUNTERS   *******************
00071              ****************************************************************
00072 00DF 00      BITCNT FCB    0        BIT COUNT OF FRAME
00073 00E0 00      WRDCNT FCB    0        NO. OF FRAMES PER MESSAGE
00074 00E1 00      MESCNT FCB    0        RESET PARITY ERROR TIME OUT
00075 00E2 00      SEQFLG FCB    0        SEQUENCE IN PROCESS
00076 00E3 00      SEQCOM FCB    0        SEQUENCE COMPLETE
00077 00E4 00      LOCKUP FCB    0        SYNCHRONIZED TO INPUT DATA STREAM
00078 00E5 00      STATUS FCB    0        SURVEILLANCE CHANNEL STATUS FLAGS
00079 00E6 00      EXCLOR FCB    0        OUTPUT OF SOFTWARE EXCLUSIVE-OR
00080              ****************************************************************
00081              *******************      PIA ADDRESSES      ********************
00082              ****************************************************************
00083       5800   PIAPA0 EQU    $5800
00084       5801   PIACA0 EQU    $5801
00085       5802   PIAPB0 EQU    $5802
00086       5803   PIACB0 EQU    $5803
00087       5804   PIAPA1 EQU    $5804
00088       5805   PIACA1 EQU    $5805
00089       5806   PIAPB1 EQU    $5806
00090       5807   PIACB1 EQU    $5807
00091              ****************************************************************
00092              *******************    SYSTEM MONITOR    *********************
00093              ****************************************************************
00094       5808   SYSMON EQU    $5808
00095              ****************************************************************
00096              *
00097              *
00098              *   SYSTEM STATUS AND ERRORS
00099              *
```

```
00100                 *   D7   CURRENTLY UNUSED!
00101                 *   D6   SOFTWARE INTERRUPT ERROR (SWI)
00102                 *   D5   BEACON/SEARCH RTQC MESSAGE GENERATED (MAIN)
00103                 *   D4   NO IDLE CHARACTER FOUND - REINITIALIZE PROGRAM (MAIN)
00104                 *   D3   PARITY ERROR (MAIN)
00105                 *   D2   REFORMATTED DATA BEING TRANSMITTED (NMI)
00106                 *   D1   UNKNOWN MESSAGE FOUND (IRQ)
00107                 *   D0   SYSTEM SYNCHRONIZED TO INPUT DATA STREAM (IRQ)
00108                 *
00109                 *
00110                 ***************************************************************
00111                 *******************   INTERRUPT VECTORS   **********************
00112                 ***************************************************************
00113 CFF8                  ORG    $CFF8
00114 CFF8 C900             FDB    IRQ       INPUT INTERRUPT
00115 CFFA C9EF             FDB    SWI       SOFTWARE INTERRUPT (NOT USED)
00116 CFFC C800             FDB    NMI       OUTPUT INTERRUPT
00117 CFFE CA00             FDB    INIT      POWER UP INTERRUPT
00118                 ***************************************************************
00119                 ****************    OUTPUT INTERRUPT ROUTINE    ****************
00120                 ***************************************************************
00121 C800                  ORG    $C800
00122 C800 96 D7      NMI   LDA A  ROT+1     END OF OUTPUT BUFFER?
00123 C802 8B 01            ADD A  #1        IF NOT, TEST FOR DATA AVAILABLE.
00124 C804 91 DB            CMP A  DENDOT
00125 C806 23 09            BLS    B2
00126 C808 86 D0            LDA A  #ENDOT    IF YES, SET THE ADJUSTABLE UPPER
00127 C80A 97 DB            STA A  DENDOT    BOUNDARY TO MAXIMUM AND OUTPUT
00128 C80C 86 68            LDA A  #BEGOT    READ POINTER TO BEGINNING OF BUFFER.
00129 C80E 97 D7            STA A  ROT+1
00130 C810 4C               INC A
00131 C811 4A         B2    DEC A
00132 C812 91 D5            CMP A  WOT+1     OUTPUT BUFFER EMPTY?  IF YES,
00133 C814 27 1D            BEQ    B1        GENERATE AN IDLE CHARACTER.
00134 C816 DE D6            LDX    ROT       IF NOT, OUTPUT NEXT FRAME
00135 C818 8B 02            ADD A  #2        AND UPDATE OUTPUT READ POINTER.
00136 C81A 97 D7            STA A  ROT+1
00137 C81C A6 00            LDA A  0,X
00138 C81E B7 5802          STA A  PIAPB0
00139 C821 A6 01            LDA A  1,X
00140 C823 B7 5806          STA A  PIAPB1
00141 C826 96 E5            LDA A  STATUS    SET 'REFORMATTED DATA' FLAG.
00142 C828 8A 04            ORA A  #%00000100
00143 C82A 97 E5            STA A  STATUS
00144 C82C B6 5802          LDA A  PIAPB0    CLEAR OUTPUT INTERRUPT FLAG.
00145 C82F B6 5806          LDA A  PIAPB1
00146 C832 3B               RTI
00147 C833 86 1F      B1    LDA A  #IDLE0    OUTPUT IDLE CHARACTER.
00148 C835 B7 5802          STA A  PIAPB0
00149 C838 86 F8            LDA A  #IDLE1
00150 C83A B7 5806          STA A  PIAPB1
00151 C83D B6 5802          LDA A  PIAPB0    CLEAR OUTPUT INTERRUPT FLAG.
```

```
00152 C840 B6 5806          LDA A  PIAPB1
00153 C843 96 E5            LDA A  STATUS   CLEAR 'REFORMATTED DATA' FLAG.
00154 C845 84 FB            AND A  #%11111011
00155 C847 97 E5            STA A  STATUS
00156 C849 3B               RTI
00157                 ****************************************************************
00158                 *******************   INPUT INTERRUPT ROUTINE   ******************
00159                 ****************************************************************
00160 C900                  ORG    $C900
00161 C900 96 E4    IRQ     LDA A  LOCKUP   INTERFACE SYNCHRONIZED TO INPUT
00162 C902 26 1B            BNE    A1       DATA STREAM?  IF YES, TEST FOR
00163                 *                     NEXT AVAILABLE FRAME.
00164 C904 B6 5800          LDA A  PIAPA0   CLEAR INPUT INTERRUPT FLAG.
00165 C907 F6 5804          LDA B  PIAPA1   ATTEMPT TO SYNCHRONIZE INTERFACE TO
00166 C90A 81 1F            CMP A  #IDLE0   INPUT DATA STREAM BY LOCKING ON AN
00167 C90C 26 10            BNE    A2       IDLE CHARACTER.  IF NO IDLE IS DE-
00168 C90E C1 F8            CMP B  #IDLE1   TECTED WAIT FOR NEXT INTERRUPT AND
00169 C910 26 0C            BNE    A2       TRY AGAIN.
00170 C912 7C 00E4          INC    LOCKUP   WHEN AN IDLE CHARACTER IS DETECTED
00171 C915 7F 00DF          CLR    BITCNT   SET THE LOCKUP FLAG AND INITIALIZE
00172 C918 96 E5            LDA A  STATUS   THE DATA BIT COUNTER.  ALSO, SET THE
00173 C91A 8A 01            ORA A  #%00000001   'SYNCHRONIZED TO DATA STREAM' FLAG.
00174 C91C 97 E5            STA A  STATUS
00175 C91E 3B       A2      RTI
00176 C91F 7C 00DF  A1      INC    BITCNT   IS THE NEXT FRAME READY?  IF NOT,
00177 C922 96 DF            LDA A  BITCNT   WAIT FOR THE NEXT INTERRUPT AND TEST
00178 C924 81 0D            CMP A  #13      AGAIN.  IF YES, RESET BIT COUNTER
00179 C926 27 07            BEQ    A11      FOR NEXT FRAME.
00180 C928 B6 5800          LDA A  PIAPA0
00181 C92B B6 5804          LDA A  PIAPA1   CLEAR INPUT INTERRUPT FLAG.
00182 C92E 3B               RTI
00183 C92F 7F 00DF  A11     CLR    BITCNT
00184 C932 96 E2            LDA A  SEQFLG   NEW MESSAGE?  IF YES,
00185 C934 27 1E            BEQ    A3       DETERMINE MESSAGE TYPE.
00186 C936 DE D0            LDX    WIN      STORE FRAME IN INPUT BUFFER.
00187 C938 B6 5800          LDA A  PIAPA0
00188 C93B F6 5804          LDA B  PIAPA1   INPUT INTERRUPT FLAG CLEARED.
00189 C93E A7 00            STA A  0,X
00190 C940 E7 01            STA B  1,X
00191 C942 96 D1            LDA A  WIN+1    UPDATE INPUT BUFFER
00192 C944 8B 02            ADD A  #2       WRITE POINTER.
00193 C946 97 D1            STA A  WIN+1
00194 C948 7A 00E0  A6      DEC    WRDCNT   DECREMENT FRAME COUNTER.  THE
00195 C94B 26 D1            BNE    A2       COMPLETE MESSAGE IS STORED IF THE
00196                 *                     FRAME COUNT IS ZERO.
00197 C94D 7C 00E3          INC    SEQCOM   WHEN THE COMPLETE MESSAGE IS STORED,
00198 C950 7F 00E2          CLR    SEQFLG   SET THE 'SEQUENCE COMPLETE' FLAG AND
00199 C953 3B               RTI             CLEAR THE 'SEQUENCE IN PROCESS' FLAG.
00200 C954 B6 5800  A3      LDA A  PIAPA0
00201 C957 F6 5804          LDA B  PIAPA1   INPUT INTERRUPT FLAG CLEARED.
00202 C95A 97 DC            STA A  TEMP     IS THIS MESSAGE A SURVEILLANCE
00203 C95C 84 70            AND A  #$70     REPORT?  IF NOT, GO TO A4 AND TEST
```

```
00204 C95E 81 60          CMP A  #$60      FOR POSSIBLE WEATHER MESSAGE.
00205 C960 26 35          BNE    A4
00206 C962 96 E5          LDA A  STATUS    A SURVEILLANCE MESSAGE WAS CORRECTLY
00207 C964 84 FD          AND A  #%11111101   DETECTED.  CLEAR 'UNDEFINED MESSAGE'
00208 C966 97 E5          STA A  STATUS    FLAG.
00209 C968 96 D1          LDA A  WIN+1     DETERMINE IF THE COMPLETE MESSAGE
00210 C96A 8B 10          ADD A  #16       PLUS AN IDLE CHARACTER CAN BE STORED
00211 C96C 81 68          CMP A  #ENDIN    IN THE INPUT BUFFER WITHOUT EXCEED-
00212 C96E 23 08          BLS    A5        ING THE INPUT BUFFER MAXIMUM UPPER
00213 C970 96 D1          LDA A  WIN+1     BOUNDARY.  IF UPPER BOUNDARY IS
00214 C972 97 DA          STA A  DENDIN    EXCEEDED UPDATE THE ADJUSTABLE INPUT
00215 C974 86 00          LDA A  #BEGIN    BUFFER UPPER BOUNDARY AND SET WRITE
00216 C976 97 D1          STA A  WIN+1     POINTER TO BEGINNING OF INPUT BUFFER.
00217 C978 7C 00E2 A5     INC    SEQFLG    SET 'SEQUENCE IN PROCESS' FLAG
00218 C97B DE D0          LDX    WIN       INITIALIZE THE WORD COUNTER TO
00219 C97D 86 07          LDA A  #7        SEVEN.
00220 C97F 97 E0          STA A  WRDCNT
00221 C981 86 1F          LDA A  #IDLE0    LOAD AN IDLE CHARACTER
00222 C983 A7 00          STA A  0,X       IN THE INPUT BUFFER.
00223 C985 86 F8          LDA A  #IDLE1
00224 C987 A7 01          STA A  1,X
00225 C989 96 DC          LDA A  TEMP      LOAD THE FIRST FRAME OF THE MESSAGE
00226 C98B A7 02          STA A  2,X       IN THE INPUT BUFFER.
00227 C98D E7 03          STA B  3,X
00228 C98F 96 D1          LDA A  WIN+1     UPDATE INPUT BUFFER
00229 C991 8B 04          ADD A  #4        WRITE POINTER.
00230 C993 97 D1          STA A  WIN+1
00231 C995 20 B1          BRA    A6
00232 C997 96 DC    A4    LDA A  TEMP      IS THIS MESSAGE A WEATHER REPORT?
00233 C999 91 01          CMP A  WTHX0     IF NOT, GO TO 7$ AND TEST FOR
00234 C99B 26 3E          BNE    A7        POSSIBLE IDLE CHARACTER.
00235 C99D D1 30          CMP B  WTHXL
00236 C99F 27 04          BEQ    A12
00237 C9A1 D1 50          CMP B  WTHXH
00238 C9A3 26 3E          BNE    A9
00239 C9A5 96 E5    A12   LDA A  STATUS    A WEATHER MESSAGE WAS CORRECTLY
00240 C9A7 84 FD          AND A  #%11111101   DETECTED.  CLEAR 'UNDEFINED MESSAGE'
00241 C9A9 97 E5          STA A  STATUS    FLAG.
00242 C9AB 96 D1          LDA A  WIN+1     DETERMINE IF THE COMPLETE MESSAGE
00243 C9AD 8B 0A          ADD A  #10       PLUS AN IDLE CHARACTER CAN BE STORED
00244 C9AF 81 68          CMP A  #ENDIN    IN THE INPUT BUFFER WITHOUT EXCEED-
00245 C9B1 23 08          BLS    A8        ING THE INPUT BUFFER MAXIMUM UPPER
00246 C9B3 96 D1          LDA A  WIN+1     BOUNDARY.  IF UPPER BOUNDARY IS
00247 C9B5 97 DA          STA A  DENDIN    EXCEEDED UPDATE THE ADJUSTABLE INPUT
00248 C9B7 86 00          LDA A  #BEGIN    BUFFER UPPER BOUNDARY AND SET WRITE
00249 C9B9 97 D1          STA A  WIN+1     POINTER TO BEGINNING OF INPUT BUFFER
00250 C9BB 7C 00E2 A8     INC    SEQFLG    SET 'SEQUENCE IN PROCESS' FLAG.
00251 C9BE DE D0          LDX    WIN       INITIALIZE THE FRAME
00252 C9C0 86 04          LDA A  #4        COUNTER TO 4.
00253 C9C2 97 E0          STA A  WRDCNT
00254 C9C4 86 1F          LDA A  #IDLE0    LOAD AN IDLE CHARACTER
00255 C9C6 A7 00          STA A  0,X       IN THE INPUT BUFFER.
```

```
00256 C9C8 86 F8          LDA A  #IDLE1
00257 C9CA A7 01          STA A  1,X
00258 C9CC 96 DC          LDA A  TEMP      LOAD THE FIRST FRAME OF THE MESSAGE
00259 C9CE A7 02          STA A  2,X       IN THE INPUT BUFFER.
00260 C9D0 E7 03          STA B  3,X
00261 C9D2 96 D1          LDA A  WIN+1     UPDATE INPUT BUFFER
00262 C9D4 8B 04          ADD A  #4        WRITE POINTER.
00263 C9D6 97 D1          STA A  WIN+1
00264 C9D8 7E C948        JMP    A6
00265 C9DB 81 1F   A7     CMP A  #IDLE0    IS THIS MESSAGE AN IDLE CHARACTER?
00266 C9DD 26 04          BNE    A9        IF YES, RETURN FROM INTERRUPT.
00267 C9DF C1 F8          CMP B  #IDLE1
00268 C9E1 27 0B          BEQ    A10
00269 C9E3 7F 00E4 A9     CLR    LOCKUP    IF NO, RESYNCHRONIZE INTERFACE TO
00270 C9E6 96 E5          LDA A  STATUS    INPUT DATA STREAM.  ALSO, SET THE
00271 C9E8 8A 02          ORA A  #%00000010   'UNDEFINED MESSAGE' FLAG AND CLEAR
00272 C9EA 84 FE          AND A  #%11111110   THE 'SYNCHRONIZED TO DATA STREAM'
00273 C9EC 97 E5          STA A  STATUS    FLAG.
00274 C9EE 3B      A10    RTI
00275              ******************************************************************
00276              ********************    SWI INTERRUPT    *************************
00277              ******************************************************************
00278 C9EF 96 E5   SWI    LDA A  STATUS    SET 'SWI ERROR' FLAG.
00279 C9F1 8A 40          ORA A  #%01000000
00280 C9F3 97 E5          STA A  STATUS
00281 C9F5 3B             RTI
00282              ****************************************************************
00283              ***************  INITIALIZATION (START UP ONLY)  ***************
00284              ****************************************************************
00285 CA00                ORG    $CA00
00286 CA00 8E 03FF INIT   LDS    #$3FF     INITIALIZE STACK POINTER.
00287 CA03 86 2F          LDA A  #$2F      SET UP THE A-SIDE OF PIA'S
00288 CA05 B7 5801        STA A  PIACA0    AS INPUT.
00289 CA08 B7 5805        STA A  PIACA1
00290 CA0B 73 5802        COM    PIAPB0    SET UP THE B-SITE OF PIA'S
00291 CA0E 73 5806        COM    PIAPB1    AS OUTPUT.
00292 CA11 86 27          LDA A  #$27
00293 CA13 B7 5803        STA A  PIACB0
00294 CA16 B7 5807        STA A  PIACB1
00295 CA19 0F      INITA1 SEI               DISABLE INPUT INTERRUPTS.
00296 CA1A 86 00          LDA A  #$00      INITIALIZE INPUT BUFFER
00297 CA1C 97 D2          STA A  RIN       BOUNDARIES AND POINTERS.
00298 CA1E 97 D3          STA A  RIN+1
00299 CA20 97 D0          STA A  WIN
00300 CA22 97 D1          STA A  WIN+1
00301 CA24 97 DF          STA A  BITCNT
00302 CA26 97 E0          STA A  WRDCNT
00303 CA28 97 E1          STA A  MESCNT
00304 CA2A 97 E2          STA A  SEQFLG
00305 CA2C 97 E3          STA A  SEQCOM
00306 CA2E 97 E4          STA A  LOCKUP
00307 CA30 97 D6          STA A  ROT
```

```
00308 CA32 97 D4          STA A  WOT
00309 CA34 97 D9          STA A  RNG+1     INIT RANDOM NO. GEN.
00310 CA36 43             COM A
00311 CA37 97 E6          STA A  EXCLOR
00312 CA39 86 3F          LDA A  #$3F
00313 CA3B 97 D8          STA A  RNG
00314 CA3D 86 68          LDA A  #104
00315 CA3F 97 DA          STA A  DENDIN
00316 CA41 97 D7          STA A  ROT+1
00317 CA43 97 D5          STA A  WOT+1
00318 CA45 86 D0          LDA A  #208
00319 CA47 97 DB          STA A  DENDOT
00320 CA49 86 10          LDA A  #%00010000
00321 CA4B 97 E5          STA A  STATUS    SET 'NO IDLE' FLAG.
00322 CA4D 0E             CLI              ENABLE INPUT INTERRUPTS.
00323              ***************************************************************
00324              ********************   MAIN PROGRAM   **************************
00325              ***************************************************************
00326 CA4E 96 E5   START  LDA A  STATUS    DISPLAY CURRENT STATUS.
00327 CA50 B7 5808        STA A  SYSMON
00328 CA53 96 E3          LDA A  SEQCOM    LOOP UNTIL A COMPLETE MESSAGE IS
00329 CA55 27 F7          BEQ    START     AVAILABLE FOR PROCESSING.
00330 CA57 96 D3          LDA A  RIN+1     TEST FOR ADJUSTABLE END OF INPUT
00331 CA59 8B 01          ADD A  #1        BUFFER.
00332 CA5B 91 DA          CMP A  DENDIN
00333 CA5D 23 08          BLS    STRTA1
00334 CA5F 86 68          LDA A  #ENDIN    IF ADJ. END OF INPUT BUFFER IS FOUND
00335 CA61 97 DA          STA A  DENDIN    IF YES, SET THE ADJUSTABLE UPPER
00336 CA63 86 00          LDA A  #BEGIN    BOUNDARY TO MAXIMUM AND INPUT READ
00337 CA65 97 D3          STA A  RIN+1     POINTER TO BEGINNING OF BUFFER.
00338 CA67 DE D2   STRTA1 LDX    RIN       FIND IDLE CHARACTER PRECEEDING
00339 CA69 A6 00          LDA A  0,X       EACH MESSAGE.  IF NOT FOUND THE
00340 CA6B E6 01          LDA B  1,X       BUFFER POINTERS ARE ASSUMED
00341 CA6D 81 1F          CMP A  #IDLE0    INCORRECT AND PROGRAM REINITIALIZA-
00342 CA6F 26 A8          BNE    INITA1    TION SHOULD BE PERFORMED.
00343 CA71 C1 F8          CMP B  #IDLE1
00344 CA73 26 A4          BNE    INITA1
00345 CA75 96 E5          LDA A  STATUS    CLEAR 'NO IDLE' FLAG.
00346 CA77 84 EF          AND A  #%11101111
00347 CA79 97 E5          STA A  STATUS
00348 CA7B A6 02          LDA A  2,X       TEST UPPER BYTE OF FRAME FOR TARGET
00349 CA7D 84 70          AND A  #$70      MESSAGE I.D.  IF FOUND DETERMINE
00350 CA7F 81 60          CMP A  #$60      ATCRBS OR SEARCH.  IF NOT, GO TO
00351 CA81 27 03          BEQ    STRTA2    'WXA1' FOR WEATHER MESSAGE.
00352 CA83 7E CBB5        JMP    WXA1
00353 CA86 A6 03   STRTA2 LDA A  3,X
00354 CA88 48             ASL A            CHECK FOR CORRECT PARITY.
00355 CA89 24 03          BCC    SRCH12
00356 CA8B 7E CBA3        JMP    SRCHA4
00357 CA8E 84 10   SRCH12 AND A  #$10      TEST BIT 12 TO DETERMINE IF REPORT
00358 CA90 26 03          BNE    SRCH      IS ATCRBS OR SEARCH.  IF ATCRBS GO
00359 CA92 7E CBBE        JMP    BCN       TO 'BCN', OTHERWISE CONTINUE.
```

```
00360                  ********************   SEARCH MESSAGE   ************************
00361 CA95 96 D5       SRCH   LDA A  WOT+1    TEST TO SEE IF A COMPLETE SEARCH
00362 CA97 8B 0A              ADD A  #10      MESSAGE PLUS IDLE CHARACTER CAN BE
00363 CA99 81 D0              CMP A  #ENDOT   STORED IN THE OUTPUT BUFFER WITHOUT
00364 CA9B 23 08              BLS    SRCHA1   EXCEEDING THE UPPER BOUNDARY.  IF
00365 CA9D 96 D5              LDA A  WOT+1    THE BOUNDARY IS EXCEEDED, UPDATE THE
00366 CA9F 97 DB              STA A  DENDOT   ADJUSTABLE UPPER BOUNDARY AND SET
00367 CAA1 86 68              LDA A  #BEGOT   THE OUTPUT WRITE POINTER  TO
00368 CAA3 97 D5              STA A  WOT+1    BEGINNING OF BUFFER.
00369                  ***********   SEARCH MESSAGE REFORMATTING ROUTINE    **********
00370 CAA5 DE D4       SRCHA1 LDX    WOT      REFORMAT FIRST FRAME.
00371 CAA7 86 1B              LDA A  #$1B
00372 CAA9 C6 30              LDA B  #$30
00373 CAAB A7 00              STA A  0,X
00374 CAAD E7 01              STA B  1,X      FIRST FRAME REFORMATTED.
00375 CAAF DE D2              LDX    RIN      REFORMAT NEXT FRAME.
00376 CAB1 A6 06              LDA A  6,X      \R\R\R\A\A\A\A\A\   ACC 'A'
00377 CAB3 44                 LSR A
00378 CAB4 44                 LSR A
00379 CAB5 44                 LSR A
00380 CAB6 44                 LSR A           \0\0\0\0\R\R\R\A\   ACC 'A'
00381 CAB7 E6 05              LDA B  5,X      \P\R'\R'\R\R\0\0\0\ ACC 'B'
00382 CAB9 58                 ASL B           \R'\R'\R\R\0\0\0\0\ ACC 'B'  C\P\
00383 CABA 24 03              BCC    SRCHA7   CHECK FOR CORRECT PARITY.
00384 CABC 7E CBA3            JMP    SRCHA4
00385                  ***************************************************************
00386                  *
00387                  *  TEST FOR VIDEO RECONSTITUTOR SYNCHRONIZATION MESSAGE.
00388                  *  THE RANGE FIELD OF THIS MESSAGE IS SET TO MAXIMUM (ALL
00389                  *  ONE'S).  THE 'CARRY' WILL BE SET AFTER ADDING ONE TO THE
00390                  *  LSB OF THE RANGE FIELD ONLY IF THE RANGE FIELD WAS SET
00391                  *  TO MAXIMUM RANGE.
00392                  *
00393                  ***************************************************************
00394 CABF 1B           SRCHA7 ABA             \R'\R'\R\R\R\R\R\A\ ACC 'A'  LO BYTE
00395 CAC0 8B 02              ADD A  #2       ADD 1/128 NMI. TO RANGE FIELD.
00396 CAC2 E6 04              LDA B  4,X      \R'\R'\R\R\R\R\R\R\ ACC 'B'  HI BYTE
00397 CAC4 C9 00              ADC B  #0       ACC B + ZERO + CARRY -->  ACC B
00398 CAC6 24 50              BCC    SRCHA2
00399                  ***************************************************************
00400                  *
00401                  *   THE FOLLOWING ROUTINE WILL LOAD A SIMULATED SEARCH RTOC
00402                  *   MESSAGE IN THE OUTPUT BUFFER EACH TIME A SYNCH MESSAGE
00403                  *   IS RECEIVED.
00404                  *
00405                  ***************************************************************
00406 CAC8 DE D4              LDX    WOT
00407 CACA 86 92              LDA A  #$92     SEARCH RTOC HEADER.
00408 CACC C6 30              LDA B  #$30
00409 CACE A7 00              STA A  0,X
00410 CAD0 E7 01              STA B  1,X      FIRST FRAME LOADED.
00411 CAD2 86 E0              LDA A  #$E0     RANGE = 56 NAUTICAL MILES.
```

```
00412 CAD4 5F                CLR B
00413 CAD5 A7 02             STA A  2,X
00414 CAD7 E7 03             STA B  3,X       SECOND FRAME LOADED.
00415 CAD9 E7 04             STA B  4,X       AZIMUTH = 0 DEGREES.
00416 CADB E7 05             STA B  5,X       THIRD FRAME LOADED.
00417 CADD DE D2             LDX    RIN
00418 CADF A6 07             LDA A  7,X
00419 CAE1 48                ASL A
00420 CAE2 24 03             BCC    SRCHA8
00421 CAE4 7E CBA3           JMP    SRCHA4
00422 CAE7 A6 0B    SRCHA8   LDA A  11,X
00423 CAE9 48                ASL A
00424 CAEA 24 03             BCC    SRCHA9
00425 CAEC 7E CBA3           JMP    SRCHA4
00426 CAEF A6 0D    SRCHA9   LDA A  13,X
00427 CAF1 48                ASL A
00428 CAF2 24 03             BCC    SRCH10
00429 CAF4 7E CBA3           JMP    SRCHA4
00430 CAF7 A6 0F    SRCH10   LDA A  15,X
00431 CAF9 48                ASL A
00432 CAFA 24 03             BCC    SRCH11
00433 CAFC 7E CBA3           JMP    SRCHA4
00434 CAFF A6 09    SRCH11   LDA A  9,X
00435 CB01 48                ASL A            CHECK FRAMES 3 THRU 7
00436 CB02 24 03             BCC    SRCH13
00437 CB04 7E CBA3           JMP    SRCHA4    FOR CORRECT PARITY.
00438 CB07 48       SRCH13   ASL A
00439 CB08 48                ASL A            \T\T\0\0\0\0\0\0\   ACC 'A'
00440 CB09 DE D4             LDX    WOT       TRANSFER 'TIS' OF SYNCH MESSAGE
00441 CB0B E7 06             STA B  6,X       TO SEARCH RTOC MESSAGE.
00442 CB0D A7 07             STA A  7,X       FORTH FRAME LOADED.
00443 CB0F 96 E5             LDA A  STATUS
00444 CB11 84 DF             AND A  #%11011111
00445 CB13 97 E5             STA A  STATUS    CLEAR 'RTOC' FLAG.
00446 CB15 7E CB85           JMP    SRCHA5
00447 CB18 58       SRCHA2   ASL B            \R'\R\R\R\R\R\R\0\  ACC 'B'
00448 CB19 48                ASL A            \R"\R\R\R\R\R\A\0\  ACC 'A'  C\R"\
00449 CB1A C9 00             ADC B  #0        \R'\R\R\R\R\R\R"\ ACC 'B'
00450 CB1C 58                ASL B            \R\R\R\R\R\R\R"\0\  ACC 'B'
00451 CB1D 48                ASL A            \R\R\R\R\R\A\0\0\   ACC 'A'  C\R"\
00452 CB1E C9 00             ADC B  #0        \R\R\R\R\R\R\R"\R"\ ACC 'B'  HI BYTE
00453 CB20 84 F0             AND A  #$F0      \R\R\R\R\0\0\0\0\   ACC 'A'  LO BYTE
00454 CB22 DE D4             LDX    WOT
00455 CB24 E7 02             STA B  2,X
00456 CB26 A7 03             STA A  3,X       SECOND FRAME REFORMATTED.
00457 CB28 DE D2             LDX    RIN       REFORMAT NEXT FRAME.
00458 CB2A A6 06             LDA A  6,X       \R\R\R\A\A\A\A\A\   ACC 'A'
00459 CB2C E6 07             LDA B  7,X       \P\A\A\A\A'\0\0\0\  ACC 'B'
00460 CB2E 58                ASL B            \A\A\A\A'\0\0\0\0\  ACC 'B'  C\P\
00461 CB2F 25 72             BCS    SRCHA4    CHECK FOR CORRECT PARITY.
00462 CB31 48                ASL A
00463 CB32 48                ASL A
```

```
00464 CB33 48              ASL A          \A\A\A\A\A\0\0\0\   ACC 'A'
00465 CB34 54              LSR B
00466 CB35 54              LSR B
00467 CB36 54              LSR B
00468 CB37 54              LSR B          \0\0\0\0\A\A\A\A'\  ACC 'B'
00469 CB38 56              ROR B          \0\0\0\0\0\A\A\A\   ACC 'B'  C\A'\
00470 CB39 D7 DD           STA B  SCRTCH
00471 CB3B 56              ROR B          \A'\0\0\0\0\0\A\A\  ACC 'B'  C\A\
00472 CB3C D7 DE           STA B  SCRTCH+1  FREE UP ACC 'B'
00473 CB3E 9B DD           ADD A  SCRTCH  \A\A\A\A\A\A\A\A\   ACC 'A'
00474 CB40 E6 08           LDA B  8,X     \A\A\A\A\M\0\T\T\   ACC 'B'
00475 CB42 54              LSR B          \0\A\A\A\A\M\0\T\   ACC 'B'
00476 CB43 C4 78           AND B  #$78    \0\A\A\A\A\0\0\0\   ACC 'B'
00477 CB45 DB DE           ADD B  SCRTCH+1  \A'\A\A\A\A\X\A\A\  ACC 'B'
00478 CB47 C4 F0           AND B  #$F0    \A'\A\A\A\0\0\0\0\  ACC 'B'  LO BYTE
00479 CB49 DE D4           LDX    WOT
00480 CB4B A7 04           STA A  4,X
00481 CB4D E7 05           STA B  5,X     THIRD FRAME REFORMATTED.
00482 CB4F DE D2           LDX    RIN     REFORMAT LAST FRAME.
00483 CB51 E6 0B           LDA B  11,X
00484 CB53 58              ASL B
00485 CB54 25 4D           BCS    SRCHA4
00486 CB56 E6 0D           LDA B  13,X
00487 CB58 58              ASL B
00488 CB59 25 48           BCS    SRCHA4
00489 CB5B E6 0F           LDA B  15,X
00490 CB5D 58              ASL B          CHECK FRAMES 5 THRU 7
00491 CB5E 25 43           BCS    SRCHA4  FOR CORRECT PARITY.
00492 CB60 E6 0E           LDA B  14,X    \Q\Q\C\C\C\C\F\F\   ACC 'B'
00493 CB62 17              TBA
00494 CB63 84 0C           AND A  #$0C    \0\0\0\0\C\C\0\0\   ACC 'A'
00495 CB65 C4 C0           AND B  #$C0    \Q\Q\0\0\0\0\0\0\   ACC 'B'
00496 CB67 27 02           BEQ    SRCHA6  SET 'Q' = 1 IF 'QT' > 0.
00497 CB69 8A 10           ORA A  #$10    \0\0\0\1\C\C\0\0\   ACC 'B'
00498 CB6B 97 DD   SRCHA6  STA A  SCRTCH  FREE UP ACC 'A'.
00499 CB6D A6 09           LDA A  9,X     \P\T\T\T\T\0\0\0\   ACC 'A'
00500 CB6F 48              ASL A          \T\T\T\T\0\0\0\0\   ACC 'A'
00501 CB70 25 31           BCS    SRCHA4  CHECK FOR CORRECT PARITY.
00502 CB72 84 F0           AND A  #$F0    \T\T\T\T\0\0\0\0\   ACC 'A'
00503 CB74 0C              CLC
00504 CB75 49              ROL A          \T\T\T\0\0\0\0\0\   ACC 'A'  C\T\
00505 CB76 49              ROL A          \T\T\0\0\0\0\0\T\   ACC 'A'  C\T\
00506 CB77 16              TAB
00507 CB78 C4 C0           AND B  #$C0    \T\T\0\0\0\0\0\0\   ACC 'B'  LO BYTE
00508 CB7A 49              ROL A          \T\0\0\0\0\0\T\T\   ACC 'A'  C\T\
00509 CB7B 84 03           AND A  #$03    \0\0\0\0\0\0\T\T\   ACC 'A'
00510 CB7D 9B DD           ADD A  SCRTCH  \0\0\0\Q\C\C\T\T\   ACC 'A'  HI BYTE
00511 CB7F DE D4           LDX    WOT
00512 CB81 A7 06           STA A  6,X
00513 CB83 E7 07           STA B  7,X     LAST FRAME REFORMATTED.
00514 CB85 86 1F   SRCHA5  LDA A  #IDLE0  ATTACH AN IDLE CHARACTER
00515 CB87 C6 F8           LDA B  #IDLE1  AT THE END OF THE MESSAGE.
```

```
00516 CB89 A7 08          STA A  8,X
00517 CB8B E7 09          STA B  9,X
00518 CB8D 96 D5          LDA A  WOT+1     UPDATE OUTPUT BUFFER
00519 CB8F 8B 0A          ADD A  #10       WRITE POINTER.
00520 CB91 97 D5          STA A  WOT+1
00521 CB93 96 E1          LDA A  MESCNT    RESET THE 'PARITY ERROR' FLAG AFTER
00522 CB95 8B 01          ADD A  #1        256 CONSECUTIVE PARITY ERROR FREE
00523 CB97 97 E1          STA A  MESCNT    INPUT MESSAGES HAVE BEEN FOUND.
00524 CB99 24 11          BCC    SKIPAS
00525 CB9B 96 E5          LDA A  STATUS
00526 CB9D 84 F7          AND A  #%11110111
00527 CB9F 97 E5          STA A  STATUS    CLEAR 'PARITY ERROR' FLAG.
00528 CBA1 20 09          BRA    SKIPAS
00529 CBA3 96 E5   SRCHA4 LDA A  STATUS
00530 CBA5 8A 08          ORA A  #%00001000
00531 CBA7 97 E5          STA A  STATUS    SET 'PARITY ERROR' FLAG.
00532 CBA9 7F 00E1        CLR    MESCNT    CLEAR MESSAGE COUNT.
00533 CBAC 96 D3   SKIPAS LDA A  RIN+1     UPDATE INPUT BUFFER
00534 CBAE 8B 10          ADD A  #16       READ POINTER.
00535 CBB0 97 D3          STA A  RIN+1
00536 CBB2 7E CD26        JMP    RNGA
00537              ********************    WEATHER MESSAGE   **********************
00538 CBB5 96 D3   WXA1   LDA A  RIN+1     PURGE THIS MESSAGE BY UPDATING
00539 CBB7 8B 0A          ADD A  #10       INPUT BUFFER READ POINTER.
00540 CBB9 97 D3          STA A  RIN+1
00541 CBBB 7E CD78        JMP    FINISH
00542              ********************    BEACON MESSAGE   **********************
00543 CBBE 96 D5   BCN    LDA A  WOT+1     TEST TO SEE IF A COMPLETE BEACON
00544 CBC0 8B 10          ADD A  #16       MESSAGE PLUS AN IDLE CHARACTER CAN
00545 CBC2 81 D0          CMP A  #ENDOT    BE STORED IN THE OUTPUT BUFFER WITH-
00546 CBC4 23 08          BLS    BCNA1     OUT EXCEEDING THE UPPER BOUNDARY.
00547 CBC6 96 D5          LDA A  WOT+1     IF EXCEEDED, UPDATE THE ADJUSTABLE
00548 CBC8 97 DB          STA A  DENDOT    UPPER BOUNDARY AND SET THE OUTPUT
00549 CBCA 86 68          LDA A  #BEGOT    WRITE POINTER TO BEGINNING OF
00550 CBCC 97 D5          STA A  WOT+1     BUFFER.
00551              ************  BEACON MESSAGE REFORMATTING ROUTINE   ***********
00552 CBCE A6 02   BCNA1  LDA A  2,X
00553 CBD0 48             ASL A            BEACON TEST FLAG SET?  IF YES,
00554 CBD1 25 03          BCS    BCNA12    DETERMINE WHETHER MESSAGE IS A CPME
00555 CBD3 7E CC5F        JMP    BCNA2     MESSAGE OR AN RTOC TRIGGER.
00556 CBD6 E6 0A   BCNA12 LDA B  10,X      RTOC TRIGGER MESSAGE?  IF YES,
00557 CBD8 C1 FF          CMP B  #RTOC0    DISSEMINATE A SIMULATED BEACON RTOC
00558 CBDA 27 03          BEQ    BCNA14    MESSAGE, OTHERWISE REFORMAT CPME
00559 CBDC 7E CC5F        JMP    BCNA2     MESSAGE TO A REGULAR ATCRBS BEACON
00560 CBDF E6 0B   BCNA14 LDA B  11,X      MESSAGE.
00561 CBE1 58             ASL B
00562 CBE2 24 03          BCC    BCNA13
00563 CBE4 7E CD17        JMP    BCNA3
00564 CBE7 C1 F0   BCNA13 CMP B  #RTOC1
00565 CBE9 26 74          BNE    BCNA2
00566              ****************************************************************
00567              *
```

```
00568                 *   THE FOLLOWING ROUTINE WILL LOAD A SIMULATED BEACON RTQC
00569                 *   MESSAGE IN THE OUTPUT BUFFER EACH TIME AN RTQC TRIGGER
00570                 *   MESSAGE IS RECEIVED.
00571                 *
00572                 ***************************************************************
00573 CBEB DE D4            LDX    WOT
00574 CBED 86 E8            LDA A  #$E8      RTQC HEADER
00575 CBEF C6 30            LDA B  #$30
00576 CBF1 A7 00            STA A  0,X
00577 CBF3 E7 01            STA B  1,X       FIRST FRAME LOADED.
00578 CBF5 86 E0            LDA A  #$E0      RANGE = 56 NAUTICAL MILES.
00579 CBF7 5F               CLR B
00580 CBF8 A7 02            STA A  2,X
00581 CBFA E7 03            STA B  3,X       SECOND FRAME LOADED.
00582 CBFC 86 80            LDA A  #$80      AZIMUTH =180 DEGREES.
00583 CBFE A7 04            STA A  4,X
00584 CC00 E7 05            STA B  5,X       THIRD FRAME LOADED.
00585 CC02 DE D2            LDX    RIN
00586 CC04 A6 05            LDA A  5,X
00587 CC06 48               ASL A
00588 CC07 24 03            BCC    BCNA5
00589 CC09 7E CD17          JMP    BCNA3
00590 CC0C A6 07    BCNA5   LDA A  7,X
00591 CC0E 48               ASL A
00592 CC0F 24 03            BCC    BCNA6
00593 CC11 7E CD17          JMP    BCNA3
00594 CC14 A6 0B    BCNA6   LDA A  11,X
00595 CC16 48               ASL A
00596 CC17 24 03            BCC    BCNA7
00597 CC19 7E CD17          JMP    BCNA3
00598 CC1C A6 0D    BCNA7   LDA A  13,X
00599 CC1E 48               ASL A
00600 CC1F 24 03            BCC    BCNA8
00601 CC21 7E CD17          JMP    BCNA3
00602 CC24 A6 0F    BCNA8   LDA A  15,X
00603 CC26 48               ASL A
00604 CC27 24 03            BCC    BCNA9
00605 CC29 7E CD17          JMP    BCNA3
00606 CC2C A6 09    BCNA9   LDA A  9,X       CHECK FRAMES 2 THRU 7
00607 CC2E 48               ASL A            FOR CORRECT PARITY.
00608 CC2F 24 03            BCC    BCNA10
00609 CC31 7E CD17          JMP    BCNA3
00610 CC34 16       BCNA10  TAB              \T\T\T\T\0\0\0\0\  ACC 'A' AND 'B'
00611 CC35 0C               CLC              TRANSFER 'TIS' OF TRIGGER MESSAGE
00612 CC36 49               ROL A            INTO RTQC MESSAGE.
00613 CC37 49               ROL A
00614 CC38 49               ROL A
00615 CC39 84 03            AND A  #$03      \0\0\0\0\0\0\T\T\  ACC 'A'  HI BYTE
00616 CC3B 58               ASL B
00617 CC3C 58               ASL B            \T\T\0\0\0\0\0\0\  ACC 'B'
00618 CC3D CA 20            ORA B  #$20      SET RUN LENGTH FLAG TO 1.   LO BYTE
00619 CC3F DE D4            LDX    WOT
```

```
00620 CC41 A7 06          STA A  6,X
00621 CC43 E7 07          STA B  7,X       FORTH FRAME LOADED.
00622 CC45 86 FF          LDA A  #$FF
00623 CC47 C6 F0          LDA B  #$F0
00624 CC49 A7 08          STA A  8,X       MODE 3/A = 7777 (OCT).
00625 CC4B E7 09          STA B  9,X       FIFTH FRAME LOADED.
00626 CC4D 4F             CLR A
00627 CC4E A7 0A          STA A  10,X      MODE 2 = 0000 (OCT).  .
00628 CC50 A7 0B          STA A  11,X
00629 CC52 A7 0C          STA A  12,X      MODE C = 0000 (OCT).
00630 CC54 A7 0D          STA A  13,X      SIXTH AND SEVENTH FRAMES LOADED.
00631 CC56 D6 E5          LDA B  STATUS
00632 CC58 CA 20          ORA B  #%00100000
00633 CC5A D7 E5          STA B  STATUS    SET 'RTQC' FLAG.
00634 CC5C 7E CCF9        JMP    BCNA4
00635 CC5F 44      BCNA2  LSR A            REFORMAT FIRST FRAME.
00636 CC60 E6 03          LDA B  3,X
00637 CC62 58             ASL B
00638 CC63 DE D4          LDX    WOT
00639 CC65 A7 00          STA A  0,X
00640 CC67 CA 10          ORA B  #$10      SET AF FLAG TO 1.
00641 CC69 E7 01          STA B  1,X       FIRST FRAME REFORMATTED.
00642 CC6B DE D2          LDX    RIN       REFORMAT NEXT FRAME.
00643 CC6D A6 06          LDA A  6,X       \R\R\R\A\A\A\A\A\   ACC 'A'
00644 CC6F 44             LSR A
00645 CC70 44             LSR A
00646 CC71 44             LSR A
00647 CC72 44             LSR A            \0\0\0\0\R\R\R\A\   ACC 'A'
00648 CC73 E6 05          LDA B  5,X       \P\R'\R'\R\R\0\0\0\ ACC 'B'
00649 CC75 58             ASL B            \R'\R'\R\R\0\0\0\0\ ACC 'B'  C\P\
00650 CC76 24 03          BCC    BCNA11
00651 CC78 7E CD17        JMP    BCNA3     CHECK FOR CORRECT PARITY.
00652 CC7B 1B      BCNA11 ABA              \R'\R'\R\R\R\R\R\A\ ACC 'A'  LO BYTE
00653 CC7C 8B 02          ADD A  #2        ADD 1/128 NMI. TO RANGE FIELD.
00654 CC7E E6 04          LDA B  4,X       \R'\R'\R\R\R\R\R\R\ ACC 'B'  HI BYTE
00655 CC80 C9 00          ADC B  #0        ACC B + ZERO + CARRY -->  ACC B
00656 CC82 58             ASL B            \R'\R\R\R\R\R\R\0\  ACC 'B'
00657 CC83 48             ASL A            \R'\R\R\R\R\R\A\0\  ACC 'A'  C\R'\
00658 CC84 C9 00          ADC B  #0        \R'\R\R\R\R\R\R'\ ACC 'B'
00659 CC86 58             ASL B            \R\R\R\R\R\R\R'\0\  ACC 'B'
00660 CC87 48             ASL A            \R\R\R\R\R\A\0\0\   ACC 'A'  C\R'\
00661 CC88 C9 00          ADC B  #0        \R\R\R\R\R\R\R'\R'\ ACC 'B'  HI BYTE
00662 CC8A 84 F0          AND A  #$F0      \R\R\R\R\0\0\0\0\   ACC 'A'  LO BYTE
00663 CC8C DE D4          LDX    WOT
00664 CC8E E7 02          STA B  2,X
00665 CC90 A7 03          STA A  3,X       SECOND FRAME REFORMATTED.
00666 CC92 DE D2          LDX    RIN       REFORMAT NEXT FRAME.
00667 CC94 A6 06          LDA A  6,X       \R\R\R\A\A\A\A\A\   ACC 'A'
00668 CC96 E6 07          LDA B  7,X       \P\A\A\A\A'\0\0\0\  ACC 'B'
00669 CC98 58             ASL B            \A\A\A\A'\0\0\0\0\  ACC 'B'  C\P\
00670 CC99 25 7C          BCS    BCNA3     CHECK FOR CORRECT PARITY.
00671 CC9B 48             ASL A
```

```
00672 CC9C 48          ASL A
00673 CC9D 48          ASL A          \A\A\A\A\A\0\0\0\   ACC 'A'
00674 CC9E 54          LSR B
00675 CC9F 54          LSR B
00676 CCA0 54          LSR B
00677 CCA1 54          LSR B          \0\0\0\0\A\A\A\A'\  ACC 'B'
00678 CCA2 56          ROR B          \0\0\0\0\0\A\A\A\   ACC 'B'  C\A'\
00679 CCA3 D7 DD       STA B  SCRTCH
00680 CCA5 56          ROR B          \A'\0\0\0\0\0\A\A\  ACC 'B'
00681 CCA6 D7 DE       STA B  SCRTCH+1   FREE UP ACC 'B'
00682 CCA8 9B DD       ADD A  SCRTCH   \A\A\A\A\A\A\A\A\   ACC 'A'
00683 CCAA E6 08       LDA B  8,X      \A\A\A\A\X\X\X\X\   ACC 'B'
00684 CCAC 54          LSR B          \0\A\A\A\A\X\X\X\   ACC 'B'
00685 CCAD C4 F8       AND B  #$F8     \0\A\A\A\A\0\0\0\   ACC 'B'
00686 CCAF DB DE       ADD B  SCRTCH+1   \A'\A\A\A\A\X\A\A\  ACC 'B'
00687 CCB1 C4 F0       AND B  #$F0     \A'\A\A\A\0\0\0\0\  ACC 'B'
00688 CCB3 DE D4       LDX    WOT
00689 CCB5 A7 04       STA A  4,X
00690 CCB7 E7 05       STA B  5,X      THIRD FRAME REFORMATTED.
00691 CCB9 DE D2       LDX    RIN      REFORMAT NEXT FRAME.
00692 CCBB E6 09       LDA B  9,X
00693 CCBD 58          ASL B
00694 CCBE 25 57       BCS    BCNA3    CHECK FOR CORRECT PARITY.
00695 CCC0 C4 F0       AND B  #$F0     SAVE 'TIS' ONLY.
00696 CCC2 17          TBA            \T\T\T\T\0\0\0\0\   ACC 'A' AND 'B'
00697 CCC3 0C          CLC
00698 CCC4 49          ROL A
00699 CCC5 49          ROL A
00700 CCC6 49          ROL A          \T\0\0\0\0\0\T\T\   ACC 'A'
00701 CCC7 84 03       AND A  #$03     \0\0\0\0\0\0\T\T\   ACC 'A'  HI BYTE
00702 CCC9 58          ASL B
00703 CCCA 58          ASL B          \T\T\0\0\0\0\0\0\   ACC 'B'  LO BYTE
00704 CCCB DE D4       LDX    WOT
00705 CCCD A7 06       STA A  6,X
00706 CCCF E7 07       STA B  7,X      FORTH FRAME REFORMATTED.
00707 CCD1 DE D2       LDX    RIN      REFORMAT NEXT FRAME.
00708 CCD3 A6 0A       LDA A  10,X
00709 CCD5 E6 0B       LDA B  11,X
00710 CCD7 58          ASL B
00711 CCD8 25 3D       BCS    BCNA3    CHECK FOR CORRECT PARITY.
00712 CCDA DE D4       LDX    WOT
00713 CCDC A7 08       STA A  8,X
00714 CCDE E7 09       STA B  9,X      FIFTH FRAME REFORMATTED.
00715 CCE0 4F          CLR A          SIXTH FRAME ALL ZEROES.
00716 CCE1 A7 0A       STA A  10,X
00717 CCE3 A7 0B       STA A  11,X     SIXTH FRAME REFORMATTED.
00718 CCE5 DE D2       LDX    RIN      REFORMAT LAST FRAME.
00719 CCE7 A6 0E       LDA A  14,X
00720 CCE9 E6 0D       LDA B  13,X     CHECK PARITY OF FRAMES 5 AND 6.
00721 CCEB 58          ASL B
00722 CCEC 25 29       BCS    BCNA3
00723 CCEE E6 0F       LDA B  15,X
```

```
00724 CCF0 58              ASL B
00725 CCF1 25 24           BCS    BCNA3
00726 CCF3 DE D4           LDX    WOT
00727 CCF5 A7 0C           STA A  12,X
00728 CCF7 E7 0D           STA B  13,X      LAST FRAME REFORMATTED.
00729 CCF9 86 1F   BCNA4   LDA A  #IDLE0    ATTACH AN IDLE CHARACTER
00730 CCFB C6 F8           LDA B  #IDLE1    AT THE END OF THE MESSAGE.
00731 CCFD A7 0E           STA A  14,X
00732 CCFF E7 0F           STA B  15,X
00733 CD01 96 D5           LDA A  WOT+1     UPDATE OUTPUT BUFFER
00734 CD03 8B 10           ADD A  #16       READ POINTER.
00735 CD05 97 D5           STA A  WOT+1
00736 CD07 96 E1           LDA A  MESCNT    RESET THE 'PARITY ERROR' FLAG AFTER
00737 CD09 8B 01           ADD A  #1        256 CONSECUTIVE PARITY ERROR FREE
00738 CD0B 97 E1           STA A  MESCNT    INPUT MESSAGES HAVE BEEN FOUND.
00739 CD0D 24 11           BCC    SKIPAB
00740 CD0F 96 E5           LDA A  STATUS
00741 CD11 84 F7           AND A  #%11110111
00742 CD13 97 E5           STA A  STATUS    CLEAR 'PARITY ERROR' FLAG.
00743 CD15 20 09           BRA    SKIPAB
00744 CD17 96 E5   BCNA3   LDA A  STATUS
00745 CD19 8A 08           ORA A  #%00001000
00746 CD1B 97 E5           STA A  STATUS    SET 'PARITY ERROR' FLAG.
00747 CD1D 7F 00E1         CLR    MESCNT
00748 CD20 96 D3   SKIPAB  LDA A  RIN+1     UPDATE INPUT BUFFER
00749 CD22 8B 10           ADD A  #16       READ POINTER.
00750 CD24 97 D3           STA A  RIN+1
00751              ******************  RANDOM NUMBER GENERATOR  ******************
00752 CD26 96 D8   RNGA    LDA A  RNG       \0\0\N\N\N\N\N\N'\  ACC 'A'
00753 CD28 D6 E6           LDA B  EXCLOR
00754 CD2A 27 02           BEQ    RNGA1
00755 CD2C 8A 40           ORA A  #$40      \0\1\N\N\N\N\N\N'\  ACC 'A'
00756 CD2E D6 D9   RNGA1   LDA B  RNG+1     \N\N\N\N\N\N\N\N'\  ACC 'B'
00757 CD30 44              LSR A            \0\0\X\N\N\N\N\N\   ACC 'A'  C\N'\
00758 CD31 56              ROR B            \N'\N\N\N\N\N\N\N\  ACC 'B'  C\N'\
00759 CD32 97 D8           STA A  RNG
00760 CD34 D7 D9           STA B  RNG+1
00761              ****************************************************************
00762              *
00763              *  THE FOLLOWING ROUTINE SIMULATES THE OUTPUT OF AN
00764              *  EXCLUSIVE-OR LOGIC GATE WITH THE FIRST AND LAST BIT OF A
00765              *  15 BIT SHIFT REGISTER USED AS INPUT.  THE OUTPUT STATE OF
00766              *  THE GATE IS STORED FOR THE NEXT UPDATE OF THE SOFTWARE
00767              *  IMPLEMENTED RANDOM NUMBER GENERATOR.
00768              *
00769              ****************************************************************
00770 CD36 24 03           BCC    RNGA2     LAST 'RNG' BIT SET?
00771 CD38 73 00E6         COM    EXCLOR
00772 CD3B 81 3E   RNGA2   CMP A  #THRS1    DISSEMINATE A SIMULATED STATUS
00773 CD3D 26 39           BNE    FINISH    MESSAGE WHEN THE COUNT OF THE
00774 CD3F C1 DF           CMP B  #THRS2    'RNG' SATISFIES THE THRESHOLD
00775 CD41 23 35           BLS    FINISH    CONDITIONS.
```

```
00776                  *****************  STATUS MESSAGE (SIMULATED) *****************
00777 CD43 96 D5   RNGA3  LDA A  WOT+1     TEST TO SEE IF A COMPLETE STATUS
00778 CD45 8B 0A          ADD A  #10       MESSAGE PLUS A IDLE CHARACTER CAN BE
00779 CD47 81 D0          CMP A  #ENDOT    STORED IN THE OUTPUT BUFFER WITHOUT
00780 CD49 23 08          BLS    RNGA4     EXCEEDING THE UPPER BOUNDARY.  IF
00781 CD4B 96 D5          LDA A  WOT+1     THE BOUNDARY IS EXCEEDED, UPDATE THE
00782 CD4D 97 DB          STA A  DENDOT    ADJUSTABLE UPPER BOUNDARY AND SET
00783 CD4F 86 68          LDA A  #BEGOT    THE OUTPUT WRITE POINTER TO
00784 CD51 97 D5          STA A  WOT+1     BEGINNING OF BUFFER.
00785                  ************   STATUS MESSAGE GENERATION ROUTINE   ************
00786 CD53 DE D4   RNGA4  LDX    WOT
00787 CD55 86 0C          LDA A  #STAT0    STATUS MESSAGE 'ID'.
00788 CD57 C6 30          LDA B  #STAT1
00789 CD59 A7 00          STA A  0,X
00790 CD5B E7 01          STA B  1,X
00791 CD5D 4F             CLR A
00792 CD5E A7 02          STA A  2,X       MESSAGE FIELDS SET TO ALL ZEROS.
00793 CD60 A7 03          STA A  3,X
00794 CD62 A7 04          STA A  4,X
00795 CD64 A7 05          STA A  5,X
00796 CD66 A7 06          STA A  6,X
00797 CD68 A7 07          STA A  7,X
00798 CD6A 86 1F          LDA A  #IDLE0    ATTACH AN IDLE CHARACTER
00799 CD6C C6 F8          LDA B  #IDLE1    AT THE END OF THE MESSAGE.
00800 CD6E A7 08          STA A  8,X
00801 CD70 E7 09          STA B  9,X
00802 CD72 96 D5          LDA A  WOT+1     UPDATE OUTPUT BUFFER
00803 CD74 8B 0A          ADD A  #10       WRITE POINTER.
00804 CD76 97 D5          STA A  WOT+1
00805 CD78 7A 00E3 FINISH DEC    SEQCOM
00806 CD7B 7E CA4E        JMP    START
00807                     END
```

SYMBOL TABLE

```
INBUF   0000  OUTBUF 0068  WIN    00D0  RIN    00D2  WOT    00D4  ROT    00D6  RNG    00D8  BEGIN  0000  ENDIN  0068
BEGOT   0068  ENDOT  00D0  DENDIN 00DA  DENDOT 00DB  IDLE0  001F  IDLE1  00F8  RTQC0  00FF  RTQC1  00F0  STAT0  000C
STAT1   0030  WTHX0  0001  WTHXL  0030  WTHXH  0050  THRS1  003E  THRS2  00DF  TEMP   00DC  SCRTCH 00DD  BITCNT 00DF
WRDCNT  00E0  MESCNT 00E1  SEQFLG 00E2  SEQCOM 00E3  LOCKUP 00E4  STATUS 00E5  EXCLOR 00E6  PIAPA0 5800  PIACA0 5801
PIAPB0  5802  PIACB0 5803  PIAPA1 5804  PIACA1 5805  PIAPB1 5806  PIACB1 5807  SYSMON 5808  NMI    C800  B2     CB11
B1      CB33  IRQ    C900  A2     C91E  A1     C91F  A11    C92F  A6     C948  A3     C954  A5     C978  A4     C997
A12     C9A5  A8     C9BB  A7     C9DB  A9     C9E3  A10    C9EE  SWI    C9EF  INIT   CA00  INITA1 CA19  START  CA4E
STRTA1  CA67  STRTA2 CA86  SRCH12 CA8E  SRCH   CA95  SRCHA1 CAA5  SRCHA7 CABF  SRCHA8 CAE7  SRCHA9 CAEF  SRCH10 CAF7
SRCH11  CAFF  SRCH13 CB07  SRCHA2 CB18  SRCHA6 CB6B  SRCHA5 CB85  SRCHA4 CBA3  SKIPAS CBAC  WXA1   CBB5  BCN    CBBE
BCNA1   CBCE  BCNA12 CBD6  BCNA14 CBDF  BCNA13 CBE7  BCNA5  CC0C  BCNA6  CC14  BCNA7  CC1C  BCNA8  CC24  BCNA9  CC2C
BCNA10  CC34  BCNA2  CC5F  BCNA11 CC7B  BCNA4  CCF9  BCNA3  CD17  SKIPAB CD20  RNGA   CD26  RNGA1  CD2E  RNGA2  CD3B
RNGA3   CD43  RNGA4  CD53  FINISH CD78
```

APPENDIX D

PROGRAM LISTING FOR SIMULATION AND DIAGNOSTIC MODULE

M68SAM IS THE PROPERTY OF MOTOROLA SPD, INC.
COPYRIGHT 1974 TO 1975 BY MOTOROLA INC

MOTOROLA M6800 CROSS ASSEMBLER, RELEASE 1.2

```
                    NAM   MODE     S/ARTS IIIA INTERFACE SIMULATOR
              ***********************************************************
              *                                        9-8-82 (11-17-82)
              *                                        USER.EFM.SIMU3
              *   HARDWARE DEFINITION                  TAPE: P-71/29610
              *
              *   RAM       0000  -  03FF
              *
              *   PIA0      5800  -  5803
              *   PIA1      5804  -  5807
              *
              *   PIA2      5808  -  580B
              *
              *   DISPLAY        580C
              *
              *   ROM1      C000  -  C3FF
              *   ROM2      C400  -  C7FF
              *   ROM3      C800  -  CBFF
              *   ROM4      CC00  -  CFFF
              *
              *
              ***********************************************************
              ***********************   RAM DATA BUFFERS   ******************
              ***********************************************************
0000                  ORG    $0000
0000 0020     BUFDIA RMB    $20       SIMU. RECV. BUFFER
0020 00B4     BUFSC1 RMB    $B4       SURV. CHANNEL#1 DATA RECV BUFFER.
00D4 00B4     BUFSC2 RMB    $B4       SURV. CHANNEL#2 DATA RECV BUFFER.
0188 0008     STATUS RMB    $08       STATUS FILE.
0190 0003     ERRORS RMB    $03       ERROR FILE.
0193 0006     TEMP   RMB    $06       SCRATCH PAD MEMORY.
0199 0003     SCRTCH RMB    $03       ACCUMULATOR DATA SAVE FILE.
019C 0080     TBLTXR RMB    $80       TRANSMIT FILE.
              ***********************************************************
              ******************    RAM BUFFER BOUNDARIES    ****************
              ***********************************************************
      0000    BUFSIB EQU    BUFDIA    BEGINNING OF SIMU RECV BUFFER.
      001F    BUFSIE EQU    BUFDIA+31    END OF SIMU RECV BUFFER.
      0020    BUFC1B EQU    BUFSC1    BEGINNING OF CHANNEL 1 RECV BUFFER.
      00D3    BUFC1E EQU    BUFSC1+179    END OF CHANNEL 1 RECV BUFFER.
      00D4    BUFC2B EQU    BUFSC2    BEGINNING OF CHANNEL 2 RECV BUFFER.
      0187    BUFC2E EQU    BUFSC2+179    END OF CHANNEL 2 RECV BUFFER.
      019C    TXTBLB EQU    TBLTXR    BEGINNING OF TRANSMIT FILE.
      021B    TXTBLE EQU    TBLTXR+127    END OF TRANSMIT FILE.
              ***********************************************************
              *********   FLAGS, COUNTERS AND BOUNDARY POINTERS    **********
              ***********************************************************
```

```
00048 021C 00      LOCKUP FCB    0
00049 021D 00      TIMOUT FCB    0
00050 021E 00      DATFLG FCB    0
00051 021F 00      TIMFLG FCB    0
00052 0220 00      RCVFLG FCB    0
00053 0221 00      TXCOMP FCB    0
00054 0222 00      TXFLAG FCB    0
00055 0223 00      SEQFLG FCB    0
00056 0224 00      EOB    FCB    0
00057 0225 00      OFFSET FCB    0
00058 0226 00      BITCNT FCB    0
00059 0227 00      FRMCNT FCB    0
00060 0228 00      STACNT FCB    0
00061 0229 00      IDLCNT FCB    0
00062 022A 00      DEL1   FCB    0
00063 022B 00      DEL2   FCB    0
00064 022C 00      DEL3   FCB    0
00065 022D 00      DATMSG FCB    $00,$00,$00   DATA MESSAGE COUNTER.
      022E 00
      022F 00
00066 0230 00      STAMSG FCB    $00,$00   STATUS MESSAGE COUNTER.
      0231 00
00067 0232 0000    RNG    FDB    0         RANDOM NO. GEN. SHIFT REGISTER.
00068 0234 00      EXCLOR FCB    0
00069 0235 0000    ENDIN  FDB    0
00070 0237 0000    ENDOT  FDB    0
00071 0239 0000    ENDUP  FDB    0
00072 023B 0000    BTXPTR FDB    0
00073              ****************************************************************
00074              ***************      RAM DATA BUFFER POINTERS     ***************
00075              ****************************************************************
00076 023D 0000    RIN    FDB    0         INPUT BUFFER READ POINTER.
00077 023F 0000    WIN    FDB    0         INPUT BUFFER WRITE POINTER.
00078 0241 0000    ROT    FDB    0         TRANSMIT TABLE DUMP POINTER.
00079 0243 0000    LKPPTR FDB    0         LOOKUP TABLE READ POINTER.
00080              ****************************************************************
00081              *********************   INTERRUPT VECTORS   *********************
00082              ****************************************************************
00083 CFF8                ORG    $CFF8
00084 CFF8 CD0E           FDB    IRQ       INPUT INTERRUPT
00085 CFFA CE13           FDB    SWI       SOFTWARE INTERRUPT  (NOT USED)
00086 CFFC CDD0           FDB    NMI       OUTPUT INTERRUPT
00087 CFFE C400           FDB    INIT      POWER UP INTERRUPT
00088              ****************************************************************
00089              ************************  TRANSMIT TABLE   ************************
00090              ****************************************************************
00091              *
00092              *  THE TRANSMIT TABLE CONTAINS SURVEILLANCE MESSAGES THAT WILL
00093              *  EXERCISE THE SURVEILLANCE CHANNEL REFORMATTING SOFTWARE.
00094              *
00095              ****************************************************************
00096 C000                ORG    $C000
```

```
00097 C000 1F      TBLTXD FCB    $1F,$F8,$1F,$F8,$1F,$F8,$1F,$F8   IDLES
      C001 F8
      C002 1F
      C003 F8
      C004 1F
      C005 F8
      C006 1F
      C007 F8
00098 C008 1F             FCB    $1F,$F8,$1F,$F8,$1F,$F8,$1F,$F8
      C009 F8
      C00A 1F
      C00B F8
      C00C 1F
      C00D F8
      C00E 1F
      C00F F8
00099 C010 EC             FCB    $EC,$28,$01,$50,$7D,$70,$E0,$18   CPME
      C011 28
      C012 01
      C013 50
      C014 7D
      C015 70
      C016 E0
      C017 18
00100 C018 EA             FCB    $EA,$E8,$03,$40,$00,$08,$1F,$F8
      C019 E8
      C01A 03
      C01B 40
      C01C 00
      C01D 08
      C01E 1F
      C01F F8
00101 C020 E8             FCB    $E8,$20,$38,$00,$10,$00,$00,$10   BCN TRIG
      C021 20
      C022 38
      C023 00
      C024 10
      C025 00
      C026 00
      C027 10
00102 C028 FF             FCB    $FF,$F8,$00,$08,$00,$08,$1F,$F8
      C029 F8
      C02A 00
      C02B 08
      C02C 00
      C02D 08
      C02E 1F
      C02F F8
00103 C030 6D             FCB    $6D,$28,$24,$08,$6C,$20,$10,$00   BCN#1
      C031 28
      C032 24
      C033 08
```

```
       C034 6C
       C035 20
       C036 10
       C037 00
00104  C038 49          FCB    $49,$28,$01,$00,$06,$40,$1F,$F8
       C039 28
       C03A 01
       C03B 00
       C03C 06
       C03D 40
       C03E 1F
       C03F F8
00105  C040 60          FCB    $60,$38,$10,$D8,$D2,$F8,$B0,$28   SRCH#1
       C041 38
       C042 10
       C043 D8
       C044 D2
       C045 F8
       C046 B0
       C047 28
00106  C048 00          FCB    $00,$70,$04,$30,$04,$28,$1F,$F8
       C049 70
       C04A 04
       C04B 30
       C04C 04
       C04D 28
       C04E 1F
       C04F F8
00107  C050 60          FCB    $60,$38,$FF,$F8,$E0,$00,$00,$10   SYNCH
       C051 38
       C052 FF
       C053 F8
       C054 E0
       C055 00
       C056 00
       C057 10
00108  C058 00          FCB    $00,$08,$00,$08,$00,$08,$1F,$F8
       C059 08
       C05A 00
       C05B 08
       C05C 00
       C05D 08
       C05E 1F
       C05F F8
00109  C060 60          FCB    $60,$38,$05,$98,$ED,$D0,$10,$00   SRCH#2
       C061 38
       C062 05
       C063 98
       C064 ED
       C065 D0
       C066 10
       C067 00
```

```
00110 C068 0C              FCB     $0C,$40,$03,$38,$BC,$28,$1F,$F8
      C069 40
      C06A 03
      C06B 38
      C06C BC
      C06D 28
      C06E 1F
      C06F F8
00111 C070 6C              FCB     $6C,$20,$20,$E8,$4A,$18,$60,$10    BCN#2
      C071 20
      C072 20
      C073 E8
      C074 4A
      C075 18
      C076 60
      C077 10
00112 C078 78              FCB     $78,$98,$02,$28,$07,$30,$1F
      C079 98
      C07A 02
      C07B 28
      C07C 07
      C07D 30
      C07E 1F
00113 C07F F8       TX1END FCB     $F8
00114 C080 1F              FCB     $1F,$F8,$1F,$F8,$1F,$F8,$01,$50    WX
      C081 F8
      C082 1F
      C083 F8
      C084 1F
      C085 F8
      C086 01
      C087 50
00115 C088 10              FCB     $10,$00,$10,$00,$20,$00,$1F,$F8
      C089 00
      C08A 10
      C08B 00
      C08C 20
      C08D 00
      C08E 1F
      C08F F8
00116 C090 EC              FCB     $EC,$28,$01,$50,$7D,$70,$F0,$08    CPME/FRAME 4
      C091 28
      C092 01
      C093 50
      C094 7D
      C095 70
      C096 E0
      C097 08
00117 C098 EA              FCB     $EA,$E8,$03,$40,$00,$08,$1F,$F8    BAD PARITY
      C099 E8
      C09A 03
      C09B 40
```

```
       C09C 00
       C09D 08
       C09E 1F
       C09F F8
00118  C0A0 EC          FCB    $EC,$28,$E0,$00,$80,$00,$00,$20   BCN TRIG/
       C0A1 28
       C0A2 E0
       C0A3 00
       C0A4 80
       C0A5 00
       C0A6 00
       C0A7 20
00119  C0A8 FF          FCB    $FF,$F8,$00,$08,$00,$08,$1F,$F8   TIS = 1/4
       C0A9 F8
       C0AA 00
       C0AB 08
       C0AC 00
       C0AD 08
       C0AE 1F
       C0AF F8
00120  C0B0 6D          FCB    $6D,$28,$24,$28,$6C,$20,$10,$00   BCN#1/FRAME 2
       C0B1 28
       C0B2 24
       C0B3 28
       C0B4 6C
       C0B5 20
       C0B6 10
       C0B7 00
00121  C0B8 49          FCB    $49,$28,$01,$00,$06,$40,$1F,$F8   BAD PARITY
       C0B9 28
       C0BA 01
       C0BB 00
       C0BC 06
       C0BD 40
       C0BE 1F
       C0BF F8
00122  C0C0 60          FCB    $60,$38,$10,$D8,$D2,$C8,$B0,$28   SRCH#1/DIFF.
       C0C1 38
       C0C2 10
       C0C3 D8
       C0C4 D2
       C0C5 C8
       C0C6 B0
       C0C7 28
00123  C0C8 00          FCB    $00,$70,$04,$30,$04,$28,$1F,$F8   AZIMUTH
       C0C9 70
       C0CA 04
       C0CB 30
       C0CC 04
       C0CD 28
       C0CE 1F
       C0CF F8
```

```
00124 C0D0 60          FCB    $60,$38,$FF,$F8,$E0,$00,$00,$20   SYNCH/DIFF.
      C0D1 38
      C0D2 FF
      C0D3 F8
      C0D4 E0
      C0D5 00
      C0D6 00
      C0D7 20
00125 C0D8 00          FCB    $00,$08,$00,$08,$00,$08,$1F,$F8   TIS = 1/4
      C0D9 08
      C0DA 00
      C0DB 08
      C0DC 00
      C0DD 08
      C0DE 1F
      C0DF F8
00126 C0E0 48          FCB    $48,$38,$05,$98,$ED,$D0,$10,$00   SRCH$2/HEADER
      C0E1 38
      C0E2 05
      C0E3 98
      C0E4 ED
      C0E5 D0
      C0E6 10
      C0E7 00
00127 C0E8 0C          FCB    $0C,$40,$03,$38,$BC,$28,$1F,$F8   INCORRECT
      C0E9 40
      C0EA 03
      C0EB 38
      C0EC BC
      C0ED 28
      C0EE 1F
      C0EF F8
00128 C0F0 6C          FCB    $6C,$20,$10,$E8,$4A,$18,$60,$10   BCN$2/DIFF.
      C0F1 20
      C0F2 10
      C0F3 E8
      C0F4 4A
      C0F5 18
      C0F6 60
      C0F7 10
00129 C0F8 74          FCB    $74,$98,$02,$28,$07,$30,$1F   RG AND 3/A
      C0F9 98
      C0FA 02
      C0FB 28
      C0FC 07
      C0FD 30
      C0FE 1F
00130 C0FF F8          FCB    $F8
00131            ***************************************************************
00132            ***************   DATA LOOK-UP TABLE   ***************************
00133            ***************************************************************
00134 C100 6C    TBLLKP FCB    $6C,$38,$05,$68,$ED,$F8,$00,$40   BCN
```

```
       C101 38
       C102 05
       C103 68
       C104 EB
       C105 F8
       C106 00
       C107 40
00135  C108 EA          FCB    $EA,$E8,$00,$08,$00,$08,$1F,$F8
       C109 E8
       C10A 00
       C10B 08
       C10C 00
       C10D 08
       C10E 1F
       C10F F8
00136  C110 E8          FCB    $E8,$38,$E0,$00,$80,$00,$00,$68   BCN RTQC
       C111 38
       C112 E0
       C113 00
       C114 80
       C115 00
       C116 00
       C117 68
00137  C118 FF          FCB    $FF,$F8,$00,$08,$00,$08,$1F,$F8
       C119 F8
       C11A 00
       C11B 08
       C11C 00
       C11D 08
       C11E 1F
       C11F F8
00138  C120 6D          FCB    $6D,$30,$90,$20,$61,$00,$00,$08   BCN#1
       C121 30
       C122 90
       C123 20
       C124 61
       C125 00
       C126 00
       C127 08
00139  C128 49          FCB    $49,$28,$00,$08,$06,$40,$1F,$F8
       C129 28
       C12A 00
       C12B 08
       C12C 06
       C12D 40
       C12E 1F
       C12F F8
00140  C130 1B          FCB    $1B,$38,$43,$78,$97,$D8,$04,$88   SRCH#1
       C131 38
       C132 43
       C133 78
       C134 97
```

```
        C135 D8
        C136 04
        C137 88
00141   C138 1F          FCB    $1F,$F8,$1F,$F8,$1F,$F8,$1F,$F8
        C139 F8
        C13A 1F
        C13B F8
        C13C 1F
        C13D F8
        C13E 1F
        C13F F8
00142   C140 92          FCB    $92,$30,$E0,$00,$00,$08,$00,$40   SRCH RTOC
        C141 30
        C142 E0
        C143 00
        C144 00
        C145 08
        C146 00
        C147 40
00143   C148 1F          FCB    $1F,$F8,$1F,$F8,$1F,$F8,$1F,$F8
        C149 F8
        C14A 1F
        C14B F8
        C14C 1F
        C14D F8
        C14E 1F
        C14F F8
00144   C150 1B          FCB    $1B,$38,$16,$88,$6E,$88,$1C,$00   SRCH#2
        C151 38
        C152 16
        C153 88
        C154 6E
        C155 88
        C156 1C
        C157 00
00145   C158 1F          FCB    $1F,$F8,$1F,$F8,$1F,$F8,$1F,$F8
        C159 F8
        C15A 1F
        C15B F8
        C15C 1F
        C15D F8
        C15E 1F
        C15F F8
00146   C160 6C          FCB    $6C,$38,$83,$90,$50,$B0,$00,$40   BCN#2
        C161 38
        C162 83
        C163 90
        C164 50
        C165 B0
        C166 00
        C167 40
00147   C168 78          FCB    $78,$98,$00,$08,$07,$30,$1F
```

```
      C169 98
      C16A 00
      C16B 08
      C16C 07
      C16D 30
      C16E 1F
00148 C16F F8      LKPEND FCB    $F8
00149              ****************************************************************
00150              *****************   MESSAGE TYPE LOOK-UP TABLE   ****************
00151              ****************************************************************
00152 C170 01      TBLMSG FCB    $01,$02,$04,$08,$10,$20,$40,$80
      C171 02
      C172 04
      C173 08
      C174 10
      C175 20
      C176 40
      C177 80
00153              ****************************************************************
00154              *********************   CONSTANTS   ****************************
00155              ****************************************************************
00156      000C    STAT0  EQU    $0C      UPPER BYTE OF STATUS HEADER.
00157      0038    STAT1  EQU    $38      LOWER BYTE OF STATUS HEADER.
00158      001F    IDLE0  EQU    $1F      UPPER BYTE OF IDLE CHARACTER.
00159      00F8    IDLE1  EQU    $F8      LOWER BYTE OF IDLE CHARACTER.
00160              ****************************************************************
00161              **********************   PIA ADDRESSES   **********************
00162              ****************************************************************
00163      5800    PIAPA0 EQU    $5800
00164      5801    PIACA0 EQU    $5801
00165      5802    PIAPB0 EQU    $5802
00166      5803    PIACB0 EQU    $5803
00167      5804    PIAPA1 EQU    $5804
00168      5805    PIACA1 EQU    $5805
00169      5806    PIAPB1 EQU    $5806
00170      5807    PIACB1 EQU    $5807
00171      5808    PIAPA2 EQU    $5808
00172      5809    PIACA2 EQU    $5809
00173      580A    PIAPB2 EQU    $580A
00174      580B    PIACB2 EQU    $580B
00175              ****************************************************************
00176              ******************   SYSTEM DISPLAY MONITOR   ******************
00177              ****************************************************************
00178      580C    SYSMON EQU    $580C
00179              ****************************************************************
00180              *
00181              *
00182              *     CONTROL REGISTER
00183              *
00184              *           SDM MODULE CONFIGURATION CONTROL FIELD
00185              *           C7  C6  \   OPERATING MODE DESCRIPTION
00186              *         ----------\-----------------  ----------------
```

```
00187                 *            0   0  \   LOOP BACK SIMULATED OUTPUT
00188                 *            0   1  \    RECV. CHANNEL #1 OUTPUT
00189                 *            1   0  \    RECV. CHANNEL #2 OUTPUT
00190                 *            1   1  \           SPARE!
00191                 *                   \
00192                 *
00193                 *                CHANNEL #2 CONFIGURATION CONTROL FIELD
00194                 *     C5  C4  C3  \  OPERATING MODE  \        DESCRIPTION
00195                 *    -------------\-----------------\-----------------------------
00196                 *      0   0   0  \    SIMULATION    \ RECV. SC & SD / TX. SC & RD
00197                 *      0   0   1  \     BY-PASS      \ RECV.  -    - / TX. MC & MD
00198                 *      0   1   0  \ SCENARIO/ON LINE \ RECV. SC & SD / TX. MC & RD
00199                 *      0   1   1  \ SCENARIO/IDLES   \ RECV. SC    - / TX. MC & RD
00200                 *      1   0   0  \      SPARE!      \
00201                 *      1   0   1  \      SPARE!      \
00202                 *      1   1   0  \      SPARE!      \
00203                 *      1   1   1  \   OPERATIONAL    \ RECV. MC & MD / TX. MC & RD
00204                 *                 \
00205                 *
00206                 *                CHANNEL #1 CONFIGURATION CONTROL FIELD
00207                 *     C2  C1  C0  \  OPERATING MODE  \        DESCRIPTION
00208                 *    -------------\-----------------\-----------------------------
00209                 *      0   0   0  \    SIMULATION    \ RECV. SC & SD / TX. SC & RD
00210                 *      0   0   1  \     BY-PASS      \ RECV.  -    - / TX. MC & MD
00211                 *      0   1   0  \ SCENARIO/ON LINE \ RECV. SC & SD / TX. MC & RD
00212                 *      0   1   1  \ SCENARIO/IDLES   \ RECV. SC    - / TX. MC & RD
00213                 *      1   0   0  \      SPARE!      \
00214                 *      1   0   1  \      SPARE!      \
00215                 *      1   1   0  \      SPARE!      \
00216                 *      1   1   1  \   OPERATIONAL    \ RECV. MC & MD / TX. MC & RD
00217                 *                 \
00218                 *     NOTES:
00219                 *       SC = SIMU. CLOCK   MC = MODEM CLOCK    RD = REFORMATTED DATA
00220                 *       SD = SIMU. DATA    MD = MODE S DATA     - = OFF
00221                 *
00222                 ***************************************************************
00223                 **************  INITIALIZATION (START UP ONLY)  ***************
00224                 ***************************************************************
00225 C400                  ORG    $C400
00226 C400 0F         INIT  SEI             DISABLE INPUT INTERRUPTS.
00227 C401 8E 03FF          LDS    #$3FF    INITIALIZE STACK POINTER.
00228 C404 86 2F            LDA A  #$2F     SET UP THE A-SIDE OF PIA'S
00229 C406 B7 5801          STA A  PIACA0   AS INPUT.
00230 C409 B7 5805          STA A  PIACA1
00231 C40C B7 5809          STA A  PIACA2
00232 C40F 73 5802          COM    PIAPB0   SET UP THE B-SIDE OF PIA'S
00233 C412 73 5806          COM    PIAPB1   AS OUTPUT.
00234 C415 73 580A          COM    PIAPB2
00235 C418 86 27            LDA A  #$27
00236 C41A B7 5803          STA A  PIACB0
00237 C41D B7 5807          STA A  PIACB1
00238 C420 B7 580B          STA A  PIACB2
```

```
00239 C423 86 FF          LDA A  #$FF      INITIALIZE CONTROL REGISTER
00240 C425 B7 580A        STA A  PIAPB2    FOR OPERATIONAL MODE.
00241 C428 4F             CLR A
00242 C429 B7 0220        STA A  RCVFLG    DISABLE DATA RECORDING.
00243 C42C B7 0222        STA A  TXFLAG    DISABLE DATA TRANSMISSION.
00244 C42F B7 0188        STA A  STATUS    INITIALIZE STATUS FILE.
00245 C432 B7 0189        STA A  STATUS+1
00246 C435 B7 018A        STA A  STATUS+2
00247 C438 B7 018B        STA A  STATU3+3
00248 C43B B7 018C        STA A  STATUS+4
00249 C43E B7 018D        STA A  STATUS+5
00250 C441 B7 018E        STA A  STATUS+6
00251 C444 B7 018F        STA A  STATUS+7
00252 C447 B7 580C        STA A  SYSMON    CLEAR DISPLAY.
00253 C44A CE 0000        LDX    #$0000    *****   MEMORY TEST   ******
00254 C44D 86 55          LDA A  #$55      LOAD RAM INPUT BUFFERS WITH
00255 C44F B7 019B        STA A  SCRTCH+2    DATA CHECKER BOARD PATTERN.
00256 C452 C6 AA          LDA B  #$AA
00257 C454 B6 019B INIT1  LDA A  SCRTCH+2
00258 C457 A7 00          STA A  0,X
00259 C459 E7 01          STA B  1,X
00260 C45B 08             INX
00261 C45C 08             INX
00262 C45D FF 0199        STX    SCRTCH
00263 C460 B6 0199        LDA A  SCRTCH
00264 C463 27 EF          BEQ    INIT1
00265 C465 B6 019A        LDA A  SCRTCH+1
00266 C468 91 B6          CMP A  #$B6
00267 C46A 23 E8          BLS    INIT1
00268              ***************************************************************
00269              **********************   MAIN PROGRAM   **********************
00270              ***************************************************************
00271              *
00272              *         THE MAIN PROGRAM SAMPLES THE LOWER EIGHT
00273              *            ADDRESS SWITCHES FOR INSTRUCTIONS.
00274              *
00275              *
00276              *                    ******   MENU    ******
00277              *
00278              *  S7    EXECUTE CHANNEL 2 SURVEILLANCE TEST ROUTINE
00279              *        WHEN SWITCH 'S7' IS SET TO 1.
00280              *  S6    EXECUTE CHANNEL 1 SURVEILLANCE TEST ROUTINE
00281              *        WHEN SWITCH 'S6' IS SET TO 1.
00282              *  S5    EXECUTE SELF TEST ROUTINE WHEN SWITCH 'S5' IS SET TO 1.
00283              *  S4    EXECUTE STATUS RANDOM NUMBER GENERATOR VARIFICATION
00284              *        ROUTINE WHEN SWITCH 'S4' IS SET TO 1.
00285              *  S3    DISSEMINATE DATA AS LONG AS SWITCH 'S3' IS SET TO 1.
00286              *  S2    EXECUTE CHANNEL 1 SURVEILLANCE TEST ROUTINE USING
00287              *        THE TRANSMIT FILE WHEN SWITCH 'S2' IS SET TO 1.
00288              *  S1    EXECUTE DIAGNOSTICS WHEN SWITCH 'S1' IS SET TO 1.
00289              *        SET UP BOTH SURV. CHANNELS FOR NORMAL OPERATION WHEN
00290              *        SWITCH 'S1' IS SET TO 0.
```

```
00291                 *  S0    EXECUTE MAIN PROGRAM WHEN SWITCH 'S0' IS SET TO 1.
00292                 *
00293                 *
00294                 ***************************************************************
00295 C46C BD CCE0 LOOP1  JSR    DELAY    WAIT 2 SECONDS.
00296 C46F B6 0188 LOOP2  LDA A  STATUS
00297 C472 B7 580C        STA A  SYSMON   DISPLAY UNIT STATUS FOR
00298 C475 27 03          BEQ    CONT     2 SECONDS IF UNIT FAILS IN
00299 C477 BD CCE0        JSR    DELAY    ANY SELECTED TEST.
00300 C47A B6 5808 CONT   LDA A  PIAPA2   GET MENU!
00301 C47D 44             LSR A          EXECUTE MAIN ROUTINE IF
00302 C47E 24 EF          BCC    LOOP2    SWITCH 'S0' IS SET TO 1.
00303 C480 C6 FF          LDA B  #%11111111   INDICATE PAUSE BEFORE CYCLING
00304 C482 F7 580C        STA B  SYSMON   THUR MAIN ROUTINE. (LED TEST)
00305 C485 BD CCE0        JSR    DELAY    WAIT 2 SECONDS.
00306 C488 C6 00          LDA B  #%00000000   INDICATE PAUSE COMPLETE.
00307 C48A F7 580C        STA B  SYSMON
00308 C48D 44             LSR A          TEST STATE OF SWITCH 'S1'.
00309 C48E 24 2D          BCC    OPR1     IF SET TO 0, NORMAL OPERATION.
00310 C490 C6 02          LDA B  #%00000010   IF SET TO 1, EXECUTE DIAGNOSTICS.
00311 C492 F7 580C        STA B  SYSMON   INDICATE DIAGNOSTICS SELECTED.
00312 C495 44       TST1  LSR A          TEST STATE OF SWITCH 'S2'.
00313 C496 24 03          BCC    TST2     IF SET TO 1 EXECUTE
00314 C498 BD C4C6        JSR    TSTLP1   CHANNEL 1 DIAG. TEST LOOP.
00315 C49B 44       TST2  LSR A          TEST STATE OF SWITCH 'S3'.
00316 C49C 24 05          BCC    TST3     IF SET TO 1 EXECUTE
00317 C49E BD C5C9        JSR    TSTLP2   TEST LOOP 2.
00318 C4A1 20 C9          BRA    LOOP1    SAMPLE MENU AFTER TERMINATION OF TSTLP 2.
00319 C4A3 44       TST3  LSR A          TEST STATE OF SWITCH 'S4'.
00320 C4A4 24 03          BCC    TST4     IF SET TO 1 EXECUTE
00321 C4A6 BD C678        JSR    TSTLP3   STATUS RAG DIAGNOSTIC ROUTINE.
00322 C4A9 44       TST4  LSR A          TEST STATE OF SWITCH 'S5'.
00323 C4AA 24 03          BCC    TST5     IF SET TO 1 EXECUTE
00324 C4AC BD C838        JSR    TSTLP4   SELF TEST LOOP.
00325 C4AF 44       TST5  LSR A          TEST STATE OF SWITCH 'S6'.
00326 C4B0 24 03          BCC    TST6     IF SET TO 1 EXECUTE
00327 C4B2 BD C8F9        JSR    TSTLP5   CHANNEL 1 SURV. TEST LOOP.
00328 C4B5 44       TST6  LSR A          TEST STATE OF SWITCH 'S7'.
00329 C4B6 24 B4          BCC    LOOP1    IF SET TO 1 EXECUTE
00330 C4B8 BD C96B        JSR    TSTLP6   CHANNEL 2 SURV. TEST LOOP.
00331 C4BB 20 AF          BRA    LOOP1
00332 C4BD 44       OPR1  LSR A          TEST STATE OF SWITCH 'S2'.
00333 C4BE 24 03          BCC    OPR2     IF SET TO 1 OPERATE IN THE
00334 C4C0 BD CCDA        JSR    OPER1    BY-PASS MODE.
00335 C4C3 7E C46C OPR2   JMP    LOOP1
00336                 ***************************************************************
00337                 ***********   SUBROUTINE (TEST LOOP #1)   ***********
00338                 ***************************************************************
00339                 *
00340                 *   THIS ROUTINE BUILDS A TRANSMIT DATA FILE FROM TWO TRANSMIT
00341                 *   DATA TABLES AND STORES THE FILE IN RAM.  THE TRANSMIT FILE
00342                 *   IS IDENTICAL TO "BUILDIT TABLE 1" WITH THE EXCEPTION OF ONE
```

```
00343                 *   INCORRECT MESSAGE FROM TRANSMIT TABLE #2 REPLACING A
00344                 *   MESSAGE FROM TABLE #1.  THE MESSAGE REPLACEMENT IS SELECTED
00345                 *   BY SWITCHES S5, S6, AND S7.
00346                 *
00347                 *    SWITCHES   \                    \      EXPECTED RESULTS
00348                 *   S7  S6  S5  \ MESSAGE SELECT  \  REFORMATTER  \  DIAGNOSTIC
00349                 *  ------------------------------------------------------------
00350                 *    0   0   0  \      WEATHER     \      PURGED    \   NO ERRORS
00351                 *    0   0   1  \ CPME/BAD PARITY \BAD PRTY/PURGED\ MESS 1 MISSING
00352                 *    0   1   0  \BCN TRIG/DIFF TIS\  REFORMATTED  \ MESS 2 INCORRECT
00353                 *    0   1   1  \BCN#1/BAD PARITY \BAD PRTY/PURGED\ MESS 3 MISSING
00354                 *    1   0   0  \ SCRH#1/DIFF. AZ \  REFORMATTED  \ MESS 4 INCORRECT
00355                 *    1   0   1  \  SYNCH/DIFF TIS \  REFORMATTED  \ MESS 5 INCORRECT
00356                 *    1   1   0  \SCRH #2/BAD PRTY \BAD PRTY/PURGED\ MESS 6 MISSING
00357                 *    1   1   1  \BCN #2/DIF-RG-3/A\  REFORMATTED  \ MESS 7 INCORRECT
00358                 *               \                \                \
00359                 *
00360                 ******************   INITIALIZATION   ************************
00361 C4C6 0E         TSTLP1 CLI
00362 C4C7 B6 00             LDA A  #0
00363 C4C9 B7 0199           STA A  SCRTCH   CLEAR MENU.
00364 C4CC B7 021C           STA A  LOCKUP   CLEAR INPUT SYNC FLAG.
00365 C4CF B7 021F           STA A  TIMFLG   CLEAR TIMEOUT FLAG.
00366 C4D2 B7 021E           STA A  DATFLG   CLEAR DATA RECEIVED FLAG.
00367 C4D5 B7 0190           STA A  ERRORS   CLEAR ALL ERROR FLAGS.
00368 C4D8 B7 0191           STA A  ERRORS+1
00369 C4DB B7 0192           STA A  ERRORS+2
00370 C4DE B7 021D           STA A  TIMOUT   CLEAR TIMEOUT COUNTER.
00371 C4E1 B7 0221           STA A  TXCOMP   CLEAR TRANSMISSION COMPLETE FLAG.
00372 C4E4 B7 0224           STA A  EOB      CLEAR END OF RECV. BUFFER DETECTED FLAG.
00373 C4E7 B7 0229           STA A  IDLCNT   CLEAR IDLE COUNTER.
00374 C4EA B7 023D           STA A  RIN
00375 C4ED B7 023F           STA A  WIN
00376 C4F0 B7 0235           STA A  ENDIN
00377 C4F3 86 20             LDA A  #BUFC1B   SET RECEIVE DATA READ AND WRITE
00378 C4F5 B7 023E           STA A  RIN+1    POINTERS TO BEGINNING OF CHANNEL #1
00379 C4F8 B7 0240           STA A  WIN+1    RECEIVE BUFFER.
00380 C4FB 86 D3             LDA A  #BUFC1E   SET UP CHANNEL #1 RECEIVE
00381 C4FD B7 0236           STA A  ENDIN+1   BUFFER UPPER BOUNDARY.
00382 C500 CE 019C           LDX    #TXTBLB   *******  BUILD TRANSMIT FILE  *******
00383 C503 FF 0193           STX    TEMP     MOVE START ADDRESS OF TRANSMIT FILE TO 'TEMP'
00384 C506 CE C000           LDX    #TBLTXD   MOVE START ADDRESS OF TRANSMIT DATA
00385 C509 FF 0195           STX    TEMP+2   TABLE TO 'TEMP+2'
00386 C50C FF 0197           STX    TEMP+4   AND TO 'TEMP+4'.
00387 C50F B6 5808           LDA A  FIWFA2   GET 'INCORRECT MESSAGE' CODE FROM
00388 C512 44                LSR A           SWITCHES S5, S6, AND S7.
00389 C513 44                LSR A
00390 C514 44                LSR A
00391 C515 44                LSR A
00392 C516 44                LSR A
00393 C517 B7 019B           STA A  SCRTCH+2  SAVE 'INCORRECT MESSAGE' CODE.
00394 C51A 26 13      TLP11  BNE    TLP12    'INCORRECT MESSAGE' SELECTED?
```

```
00395 C51C B6 0195          LDA A  TEMP+2   OFFSET POINTER TO ACCESS SELECTED
00396 C51F F6 0196          LDA B  TEMP+3   INCORRECT MESSAGE.
00397 C522 CB 80            ADD B  #$80
00398 C524 89 00            ADC A  #0
00399 C526 B7 0197          STA A  TEMP+4
00400 C529 F7 0198          STA B  TEMP+5
00401 C52C FE 0197          LDX    TEMP+4
00402 C52F 86 08    TLP12   LDA A  #8       SET UP FOR 8 FRAME TRANSFER SEQUENCE.
00403 C531 B7 019A          STA A  SCRTCH+1
00404 C534 A6 00    TLP14   LDA A  0,X      GET DATA FRAME.
00405 C536 E6 01            LDA B  1,X
00406 C538 FE 0193          LDX    TEMP     TRANSFER FRAME TO TRANSMIT FILE.
00407 C53B A7 00            STA A  0,X
00408 C53D E7 01            STA B  1,X
00409 C53F B6 0196          LDA A  TEMP+3   UPDATE TRANSMIT DATA POINTER.
00410 C542 F6 0195          LDA B  TEMP+2
00411 C545 8B 02            ADD A  #2
00412 C547 C9 00            ADC B  #0
00413 C549 B7 0196          STA A  TEMP+3
00414 C54C F7 0195          STA B  TEMP+2
00415 C54F B6 0198          LDA A  TEMP+5   UPDATE TRANSFER POINTER.
00416 C552 F6 0197          LDA B  TEMP+4
00417 C555 8B 02            ADD A  #2
00418 C557 C9 00            ADC B  #0
00419 C559 B7 0198          STA A  TEMP+5
00420 C55C F7 0197          STA B  TEMP+4
00421 C55F B6 0194          LDA A  TEMP+1   UPDATE TRANSMIT FILE POINTER.
00422 C562 F6 0193          LDA B  TEMP
00423 C565 8B 02            ADD A  #2
00424 C567 C9 00            ADC B  #0
00425 C569 B7 0194          STA A  TEMP+1
00426 C56C F7 0193          STA B  TEMP
00427 C56F FE 0197          LDX    TEMP+4   GET TRANSMIT DATA POINTER.
00428 C572 7A 019A          DEC    SCRTCH+1   DECREMENT FRAME TRANSFER COUNT.
00429 C575 B6 019A          LDA A  SCRTCH+1   WHEN 8 FRAMES ARE TRANSFERED UPDATE
00430 C578 26 BA            BNE    TLP14    TO NEXT MESSAGE.
00431 C57A FE 0195          LDX    TEMP+2   RESET TRANFER POINTER.
00432 C57D FF 0197          STX    TEMP+4
00433 C580 B6 0196          LDA A  TEMP+3   TRANSMIT FILE COMPLETED?
00434 C583 81 7F            CMP A  #$7F
00435 C585 22 08            BHI    TLP13
00436 C587 7A 019B          DEC    SCRTCH+2   RECALL SAVED "INCORRECT MESSAGE" CODE.
00437 C58A B6 019B          LDA A  SCRTCH+2
00438 C58D 20 8B            BRA    TLP11    ******** TRANSMIT FILE COMPLETE ********
00439 C58F B6 0188  TLP13   LDA A  STATUS   CLEAR "CHANNEL #1 FAILURE" FLAG.
00440 C592 84 BF            AND A  #%10111111
00441 C594 B7 0188          STA A  STATUS
00442 C597 86 09            LDA A  #9       SET FRAME COUNT TO ACCEPT 8 FRAMES
00443 C599 B7 0227          STA A  FRCNT    AFTER TRANSMISSION HAS COMPLETED.
00444 C59C CE 019C          LDX    #TXTBLS   SET TRANSMIT POINTER TO
00445 C59F FF 0241          STX    POI      BEGINNING OF TRANSMIT TABLE.
00446 C5A2 CE 021B          LDX    #TXTBLE   SET UP TRANSMIT TABLE
```

```
00447 C5A5 FF 0237        STX    ENDOT    UPPER BOUNDARY.
00448 C5A8 CE C100        LDX    #TBLLKP   SET LOOKUP POINTER TO
00449 C5AB FF 0243        STX    LKPPTR   BEGINNING OF LOOKUP TABLE.
00450 C5AE CE C16F        LDX    #LKPEND   SET UP LOOKUP TABLE
00451 C5B1 FF 0239        STX    ENDUP    UPPER BOUNDARY.
00452 C5B4 86 78          LDA A  #$78     SET UP CONFIGURATION CONTROL
00453 C5B6 B7 580A        STA A  PIAPB2   FOR CHANNEL 1 TESTING.
00454 C5B9 86 06          LDA A  #%00000110   INDICATE THAT TEST
00455 C5BB B7 580C        STA A  SYSMON   LOOP 1 IS EXECUTING.
00456 C5BE 86 01          LDA A  #1
00457 C5C0 B7 0222        STA A  TXFLAG   ENABLE DATA TRANSMISSION.
00458 C5C3 B7 0220        STA A  RCVFLG   ENABLE DATA RECORDING.
00459                 *****************   INITIALIZATION COMPLETED   ***************
00460 C5C6 7E C9DB        JMP    TLP561
00461                 ***************************************************************
00462                 ***************  SUBROUTINE  (TEST LOOP #2)  ******************
00463                 ***************************************************************
00464                 *
00465                 *      THIS ROUTINE SETS UP THE MODE S SURVEILLANCE LINE
00466                 *      SIMULATOR TO CONTINUALLY OUTPUT A MESSAGE TO BOTH
00467                 *      SURVEILLANCE CHANNELS, SIMULTANIOUSLY.  ADDRESS SWITCHES
00468                 *      S5, S6, AND S7 DESIGNATE THE TYPE MESSAGE DISSEMINATED.
00469                 *
00470                 *              S7  S6  S5  \  MESSAGE SELECTED
00471                 *             ---------------------------------
00472                 *               0   0   0  \  IDLE CHARACTERS
00473                 *               0   0   1  \   MODE S CPME
00474                 *               0   1   0  \   BCN TRIGGER
00475                 *               0   1   1  \  REG. BEACON #1
00476                 *               1   0   0  \  REG. SEARCH #1
00477                 *               1   0   1  \    VR SYNCH
00478                 *               1   1   0  \  REG. SEARCH #2
00479                 *               1   1   1  \  REG. BEACON #2
00480                 *                          \
00481                 *
00482                 *******************   INITIALIZATION   ***********************
00483 C5C9 CE C000 TSTLP2 LDX    #TBLTXD   GET START ADDRESS OF TRANSMIT TABLE.
00484 C5CC FF 023B        STX    BTXPTR
00485 C5CF B6 5808        LDA A  PIAPA2   LOOK AT SWITCHES S5, S6, AND S7.
00486 C5D2 44             LSR A           DETERMINE MESSAGE
00487 C5D3 44             LSR A           TO BE DISSEMINATED.
00488 C5D4 44             LSR A
00489 C5D5 44             LSR A
00490 C5D6 44             LSR A
00491 C5D7 27 0B   TLP22  BEQ    TLP21    THIS MESSAGE SELECTED?  IF NOT,
00492 C5D9 F6 023C        LDA B  BTXPTR+1   POINT TO ADDRESS OF NEXT MESSAGE.
00493 C5DC CB 10          ADD B  #16
00494 C5DE F7 023C        STA B  BTXPTR+1
00495 C5E1 4A             DEC A           DECREMENT SELECT MESSAGE CODE.
00496 C5E2 20 F3          BRA    TLP22
00497 C5E4 FE 023B TLP21  LDX    BTXPTR   LOAD START ADDRESS OF MESSAGE
00498 C5E7 FF 0241        STX    PUT      INTO TRANSMIT TABLE READ POINTER.
```

```
00499 C5EA F6 023C        LDA B  BTXPTR+1   DEFINE THE TRANSMIT TABLE
00500 C5ED CB 0D          ADD B  #13        UPPER BOUNDARY.
00501 C5EF F7 023B        STA B  ENBOT+1
00502 C5F2 F6 023B        LDA B  BTXPTR
00503 C5F5 F7 0237        STA B  ENBOT
00504 C5F8 86 00          LDA A  #0
00505 C5FA B7 021C        STA A  LOCKUP     CLEAR LOCKUP FLAG.
00506 C5FD B7 021E        STA A  DATFLG     CLEAR DATA FLAG.
00507 C600 B7 021F        STA A  TIMFLG     CLEAR TIMEOUT FLAG.
00508 C603 B7 021D        STA A  TIMOUT     CLEAR TIMEOUT COUNTER.
00509 C606 B7 023F        STA A  WIN
00510 C609 B7 0235        STA A  ENDIN      SET RECEIVE DATA WRITE
00511 C60C 86 00          LDA A  #BUFSIB     POINTER TO BEGINNING OF
00512 C60E B7 0240        STA A  WIN+1      SIMU. RECEIVE BUFFER.
00513 C611 86 1F          LDA A  #BUFSIE     SET UP SIMU. RECEIVE
00514 C613 B7 0236        STA A  ENDIN+1     BUFFER UPPER BOUNDARY.
00515 C616 86 FF          LDA A  #$FF       SET FRAME COUNT TO MAXIMUM.
00516 C618 B7 0227        STA A  FRMCNT
00517 C61B 86 00          LDA A  #$00       SET CONFIGURATION CONTROL TO OUTPUT
00518 C61D B7 580A        STA A  PIAPB2     SIMULATED DATA TO BOTH SURV. CHANNELS.
00519 C620 86 0A          LDA A  #%00001010   INDICATE TEST
00520 C622 B7 580C        STA A  SYSMON     LOOP 2 IS RUNNING.
00521 C625 4F             CLR A
00522 C626 B7 0221        STA A  TXCOMP     CLEAR TRANSMISSION COMPLETE FLAG.
00523 C629 86 01          LDA A  #1
00524 C62B B7 0222        STA A  TXFLAG     ENABLE DATA TRANSMISSION.
00525 C62E B7 0220        STA A  RCVFLG     ENABLE DATA DATA RECORDING.
00526 C631 0E             CLI               ENABLE INPUT INTERRUPTS.
00527                 ****************    INITIALIZATION COMPLETED    ****************
00528 C632 B6 5808 TLP23  LDA A  PIAPA2     TEST LOOP 2 WILL LOOP UNTIL SWITCH 'S3'
00529 C635 84 08          AND A  #%00001000   IS SET TO ITS 0 POSITION.
00530 C637 27 24          BEQ    TLP24
00531 C639 B6 0221        LDA A  TXCOMP     MESSAGE TRANSMISSION COMPLETE?
00532 C63C 27 09          BEQ    TLP25
00533 C63E FE 023B        LDX    BTXPTR     RESET TRANSMISSION READ POINTER.
00534 C641 FF 0241        STX    ROT
00535 C644 7F 0221        CLR    TXCOMP     RESET TRANSMISSION COMPLETE FLAG.
00536 C647 B6 0240 TLP25  LDA A  WIN+1
00537 C64A 81 1F          CMP A  #BUFSIE     RESET THE SIMU. RECEIVE DATA WRITE
00538 C64C 23 E4          BLS    TLP23      POINTER IF AT THE END OF INPUT
00539 C64E 86 00          LDA A  #BUFSIB     BUFFER.
00540 C650 B7 023F        STA A  WIN
00541 C653 7F 021D        CLR    TIMOUT     CLEAR TIMEOUT COUNTER.
00542 C656 86 FF          LDA A  #$FF
00543 C658 B7 0227        STA A  FRMCNT     PREVENT SEQUENCE FROM COMPLETING.
00544 C65B 20 D5          BRA    TLP23
00545                 ********************    EXIT ROUTINE    ************************
00546 C65D B6 5808 TLP24  LDA A  PIAPA2     CONTINUE TO DISSEMINATE IDLE CHARACTERS
00547 C660 84 03          AND A  #$03       IF SWITCH 'S2' AND 'S1' REMAIN SET TO 1.
00548 C662 81 03          CMP A  #$03
00549 C664 27 09          BEQ    TLP24
00550 C666 0F             SEI               DISABLE INPUT INTERRUPTS.
```

```
00551 C667 7F 0222        CLR    TXFLAG   DISABLE DATA TRANSMISSION.
00552 C66A 86 FF          LDA A  #$FF     SET CONFIGURATION CONTROL
00553 C66C B7 580A        STA A  PIAPB2   FOR NORMAL OPERATION.
00554 C66F 7F 0220 TLP26  CLR    RCVFLG   DISABLE DATA RECORDING.
00555 C672 86 02          LDA A  #%00000010   INDICATE TEST LOOP 2
00556 C674 B7 580C        STA A  SYSMON   IS COMPLETE.
00557 C677 39             RTS
00558              ***************************************************************
00559              ***************   SUBROUTINE (TEST LOOP #3)   *****************
00560              ***************************************************************
00561              *
00562              *       THIS ROUTINE PROVIDES THE RATIO BETWEEN STATUS
00563              *      MESSAGES AND REFORMATTED SURVEILLANCE MESSAGES.
00564              *   (VERIFIES THE OPERATION OF THE RANDOM NUMBER GENERATOR)
00565              *
00566              *
00567              *        S7  S6  S5  \        BYTE DISPLAYED
00568              *       ---------------------------------------------
00569              *         0   0   0  \  UPPER BYTE OF MESSAGE COUNTER.
00570              *         0   0   1  \  MIDDLE BYTE OF MESSAGE COUNTER.
00571              *         0   1   0  \  LOWER BYTE OF MESSAGE COUNTER.
00572              *         0   1   1  \  UPPER BYTE OF STATUS COUNTER.
00573              *         1   0   0  \  LOWER BYTE OF STATUS COUNTER.
00574              *         1   0   1  \  UPPER BYTE OF RANDOM NO. GEN.
00575              *         1   1   0  \  LOWER BYTE OF RANDOM NO. GEN.
00576              *         1   1   1  \  EXCLUSIVE OR GATE OUTPUT.
00577              *                    \
00578              *
00579              ******************   INITIALIZATION    ************************
00580 C678 86 00   TSTLP3 LDA A  #0
00581 C67A B7 021C        STA A  LOCKUP   CLEAR LOCKUP FLAG.
00582 C67D B7 021F        STA A  TIMFLG   CLEAR TIMEOUT FLAG.
00583 C680 B7 021E        STA A  DATFLG   CLEAR DATA RECV. FLAG.
00584 C683 B7 021D        STA A  TIMOUT   CLEAR TIMEOUT COUNTER.
00585 C686 B7 0221        STA A  TXCOMP   CLEAR TRANSMISSION COMPETE FLAG.
00586 C689 B7 0223        STA A  SEQFLG   CLEAR SEQUENCE FLAG.
00587 C68C B7 023D        STA A  RIN
00588 C68F B7 023F        STA A  WIN
00589 C692 B7 0235        STA A  ENDIN
00590 C695 B7 0230        STA A  STAMSG   CLEAR STATUS MESSAGE COUNTER.
00591 C698 B7 0231        STA A  STAMSG+1
00592 C69B B7 022D        STA A  DATMSG   CLEAR DATA MESSAGE COUNTER.
00593 C69E B7 022E        STA A  DATMSG+1
00594 C6A1 B7 022F        STA A  DATMSG+2
00595 C6A4 B7 0233        STA A  RNG+1    INIT RANDOM NO. GEN.
00596 C6A7 43             COM A
00597 C6A8 B7 0234        STA A  EXCLOR
00598 C6AB 86 3F          LDA A  #$3F
00599 C6AD B7 0232        STA A  RNG
00600 C6B0 86 00          LDA A  #$00     SET RECEIVE DATA READ AND WRITE
00601 C6B2 B7 023E        STA A  RIN+1    POINTERS TO BEGINNING OF SIMU.
00602 C6B5 B7 0240        STA A  WIN+1    RECEIVE BUFFER.
```

```
00603 C6B8 86 1F          LDA A  #BUFSIE   SET UP SIMU. RECEIVE
00604 C6BA B7 0236        STA A  ENDIN+1   BUFFER UPPER BOUNDARY.
00605 C6BD CE 019C        LDX    #TXTBLB   ******  BUILD TRANSMIT FILE   *****
00606 C6C0 FF 0193        STX    TEMP      STORE START ADDRESS OF TRANSMIT FILE IN 'TEMP'
00607 C6C3 CE C060        LDX    #TBLTXD+96   STORE START ADDRESS OF
00608 C6C6 FF 0195        STX    TEMP+2    TRANSMIT TABLE IN 'TEMP+2'.
00609 C6C9 A6 00   TLP36  LDA A  0,X       MOVE FRAME FROM TRANSMIT
00610 C6CB E6 01          LDA B  1,X       TABLE TO TRANSMIT FILE.
00611 C6CD FE 0193        LDX    TEMP
00612 C6D0 A7 00          STA A  0,X
00613 C6D2 E7 01          STA B  1,X
00614 C6D4 08             INX              UPDATE TRANSMIT
00615 C6D5 08             INX              FILE POINTER.
00616 C6D6 FF 0193        STX    TEMP
00617 C6D9 FE 0195        LDX    TEMP+2    UPDATE TRANSMIT
00618 C6DC 08             INX              TABLE POINTER.
00619 C6DD 08             INX
00620 C6DE FF 0195        STX    TEMP+2    IDLE CHARACTER TRAIN
00621 C6E1 8C C070        CPX    #TBLTXD+112  .TRANSFER COMPLETE?
00622 C6E4 26 E3          BNE    TLP36     *****  TRANSMIT FILE COMPLETED  *****
00623 C6E6 CE 019C        LDX    #TXTBLB   SET TRANSMIT POINTER TO
00624 C6E9 FF 0241        STX    ROT       BEGINNING OF TRANSMIT FILE.
00625 C6EC FF 0193        STX    TEMP      TRANSMIT UPPER BOUNDARY.
00626 C6EF F6 0193        LDA B  TEMP
00627 C6F2 B6 0194        LDA A  TEMP+1
00628 C6F5 8B 0F          ADD A  #$0F
00629 C6F7 B7 0194        STA A  TEMP+1
00630 C6FA C9 00          ADC B  #0
00631 C6FC F7 0193        STA B  TEMP
00632 C6FF FE 0193        LDX    TEMP      SET UP UPPER BOUNDAREY
00633 C702 FF 0237        STX    ENDOUT    OF TRANSMIT FILE.
00634 C705 B6 0236        LDA A  ENDIN+1
00635 C708 4A             DEC A
00636 C709 4A             DEC A            SET UP SIMU. RECV. UPPER BOUNDARY FOR THIS
00637 C70A B7 0198        STA A  TEMP+3    ROUTINE TWO ADDRESSES LESS THAN ENDIN.
00638 C70D 86 00          LDA A  #0
00639 C70F B7 0193        STA A  TEMP
00640 C712 B7 0194        STA A  TEMP+1
00641 C715 B7 0195        STA A  TEMP+2
00642 C718 43             COM A            SET FRAME COUNT TO MAXIMUM.
00643 C719 B7 0227        STA A  FRMCNT
00644 C71C 86 78          LDA A  #$78      SET UP CONFIGURATION CONTROL
00645 C71E B7 580A        STA A  PIAFF2    FOR CHANNEL 1 MONITORING.
00646 C721 86 12          LDA A  #$0,01-010   INDICATE THAT TEST LOOP 3
00647 C723 B7 580C        STA A  SYSMON    IS EXECUTING
00648 C726 86 01          LDA A  #1
00649 C728 B7 0222        STA A  TXFLAG    ENABLE DATA TRANSMISSION.
00650 C72B B7 0220        STA A  RCVFLG    ENABLE DATA RECORDING.
00651 C72E 0E             CLI              ENABLE INPUT INTERRUPTS.
00652              ***************   INITIALIZATION COMPLETED   ***************
00653 C72F 96 0241 TLP31  LDA A  ROT       MESSAGE TRANSMISSION COMPLETED
00654 C732 91 0237        CMP A  ENDOUT
```

```
00655 C735 22 0A          BHI    TLP39
00656 C737 26 0E          BNE    TLP310
00657 C739 B6 0242        LDA A  ROT+1
00658 C73C B1 0238        CMP A  ENDOT+1
00659 C73F 23 06          BLS    TLP310    IF YES,
00660 C741 CE 019C TLP39  LDX    #TXTBLB    SET OUTPUT READ POINTER TO
00661 C744 FF 0241        STX    ROT       BEGINNING OF TRANSMIT OUTPUT FILE.
00662 C747 B6 0240 TLP310 LDA A  WIN+1     RESET RECV. BUFFER WRITE POINTER
00663 C74A B1 0198        CMP A  TEMP+5     TO BEGINNING OF BUFFER IF IT EXCEEDS
00664 C74D 23 05          BLS    TLP311    THE UPPER BOUNDARY OF THE BUFFER.
00665 C74F 86 00          LDA A  #0
00666 C751 B7 0240        STA A  WIN+1
00667 C754 B6 023E TLP311 LDA A  RIN+1     DATA AVAILABLE?
00668 C757 B1 0240        CMP A  WIN+1     IF NOT, WAIT!
00669 C75A 27 B3          BEQ    TLP31
00670 C75C F6 0223        LDA B  SEQFLG    SEQUENCE IN PROCESS?
00671 C75F 27 22          BEQ    TLP32
00672 C761 B6 0197        LDA A  TEMP+4    DECREMENT SEQUENCE COUNT.
00673 C764 80 01          SUB A  #1
00674 C766 B7 0197        STA A  TEMP+4    END OF SEQUENCE?
00675 C769 26 03          BNE    TLP33
00676 C76B 7F 0223        CLR    SEQFLG
00677 C76E B6 023E TLP33  LDA A  RIN+1     UPDATE INPUT READ POINTER.
00678 C771 8B 02          ADD A  #2
00679 C773 B7 023E        STA A  RIN+1
00680 C776 B1 0198        CMP A  TEMP+5    END OF INPUT BUFFER?
00681 C779 23 B4          BLS    TLP31     IF YES, SET INPUT READ
00682 C77B 86 00          LDA A  #0        POINTER TO BEGINNING OF
00683 C77D B7 023E        STA A  RIN+1     INPUT BUFFER.
00684 C780 7E C72F        JMP    TLP31
00685 C783 FE 023D TLP32  LDX    RIN
00686 C786 A6 00          LDA A  0,X       GET HEADER.
00687 C788 E6 01          LDA B  1,X
00688 C78A 81 0C          CMP A  #STAT0    STATUS MESSAGE DETECTED?
00689 C78C 26 21          BNE    TLP34
00690 C78E C1 39          CMP B  #STAT1
00691 C790 26 28          BNE    TLP35
00692 C792 B6 0231        LDA A  STAMSG+1    INCREMENT STATUS COUNTER.
00693 C795 F6 0230        LDA B  STAMSG
00694 C798 8B 01          ADD A  #1
00695 C79A C9 00          ADC B  #0
00696 C79C B7 0231        STA A  STAMSG+1
00697 C79F F7 0230        STA B  STAMSG
00698 C7A2 86 04          LDA A  #4        INITIALIZE SEQUENCE COUNTER.
00699 C7A4 B7 0197        STA A  TEMP+4
00700 C7A7 86 01          LDA A  #1        SET FLAG 'SEQUENCE IN PROCESS'
00701 C7A9 B7 0223        STA A  SEQFLG
00702 C7AC 7E C802        JMP    TLP312
00703 C7AF 81 1F   TLP34  CMP A  #IDLE      IDLE CHARACTER DETECTED?
00704 C7B1 26 07          BNE    TLP35
00705 C7B3 C1 F8          CMP B  #IDLE
00706 C7B5 26 03          BNE    TLP35
```

```
00707 C7B7 7E C76E          JMP     TLP33
00708 C7BA B6 022F TLP35    LDA A   DATMSG+2    INCREMENT MESSAGE COUNTER.
00709 C7BD F6 022E          LDA B   DATMSG+1
00710 C7C0 8B 01            ADD A   #1
00711 C7C2 C9 00            ADC B   #0
00712 C7C4 24 03            BCC     TLP315
00713 C7C6 7C 022D          INC     DATMSG
00714 C7C9 B7 022F TLP315   STA A   DATMSG+2
00715 C7CC F7 022E          STA B   DATMSG+1
00716 C7CF 86 01            LDA A   #1          SET SEQUENCE FLAG TO 1.
00717 C7D1 B7 0223          STA A   SEQFLG
00718 C7D4 86 04            LDA A   #4          INITIALIZE SEQUENCE COUNTER.
00719 C7D6 B7 0197          STA A   TEMP+4
00720                  ******************  RANDOM NUMBER GENERATOR  ****************
00721 C7D9 B6 0232          LDA A   RNG         \0\0\N\N\N\N\N\N'\
00722 C7DC F6 0234          LDA B   EXCLOR
00723 C7DF 27 02            BEQ     RNGA1
00724 C7E1 8A 40            ORA A   #$40        \0\1\N\N\N\N\N\N'\
00725 C7E3 F6 0233 RNGA1    LDA B   RNG+1       \N\N\N\N\N\N\N\N*\
00726 C7E6 44               LSR A               \0\-->\0\0\X\N\N\N\N\N\N\-->\N'\
00727 C7E7 56               ROR B               \N'\-->\N'\N\N\N\N\N\N\N\N\-->\N*\
00728 C7E8 B7 0232          STA A   RNG         \0\0\X\N\N\N\N\N\N\
00729 C7EB F7 0233          STA B   RNG+1       \N'\N\N\N\N\N\N\N\
00730 C7EE 24 03            BCC     RNGA2
00731 C7F0 73 0234          COM     EXCLOR
00732 C7F3 81 3F   RNGA2    CMP A   #$3F        WHEN THE RANDOM NUMBER
00733 C7F5 26 0B            BNE     TLP312      GENERATOR HAS COMPLETED
00734 C7F7 C1 00            CMP B   #$00        A FULL SEQUENCE, EXIT ROUTINE.
00735 C7F9 26 07            BNE     TLP312
00736 C7FB B6 0234          LDA A   EXCLOR
00737 C7FE 81 FF            CMP A   #$FF
00738 C800 27 22            BEQ     TLP38
00739                  ******************  INSTRUCTION HANDLER  ****************
00740 C802 B6 5808 TLP312   LDA A   PIAPA2      MONITOR MENU FOR
00741 C805 44               LSR A               INSTRUCTION UPDATES.
00742 C806 24 1C            BCC     TLP38       TERMINATE ROUTINE IF SWITCH 'S0' IS 0.
00743 C808 44               LSR A               LOOK AT SWITCHES S5, S6, AND S7.
00744 C809 44               LSR A               DETERMINE DATA OR STATUS COUNTER
00745 C80A 44               LSR A               BYTE TO BE DISPLAYED.
00746 C80B 44               LSR A
00747 C80C CE 022D          LDX     #DATMSG     SET INDEX POINTER TO UPPER BYTE OF
00748 C80F C6 08            LDA B   #8          DATA COUNTER.
00749 C811 81 00            CMP A   #0
00750 C813 26 08   TLP316   BNE     TLP313
00751 C815 A6 00            LDA A   X           DISPLAY SELECTED BYTE.
00752 C817 B7 580C          STA A   SYSMON
00753 C81A 7E C76E TLP314   JMP     TLP33
00754 C81D 08      TLP313   INX                 UPDATE INDEX TO NEXT BYTE.
00755 C81E 5A               DEC B
00756 C81F 27 F9            BEQ     TLP314
00757 C821 4A               DEC A
00758 C822 20 FF            BRA     TLP312
```

```
                  ***********************   EXIT ROUTINE   ***********************
C824 0F           TLP38  SEI                DISABLE INPUT INTERRUPTS.
C825 7F 0220             CLR     RCVFLG    DISABLE DATA RECORDING.
C828 7F 0222             CLR     TXFLAG    DISABLE DATA TRANSMISSION.
C82B 86 FF               LDA A   #$FF      SET CONFIGURATION CONTROL
C82D B7 580A             STA A   PIAFB2    BACK TO NORMAL OPERATION.
C830 86 02               LDA A   #%00000010   INDICATE TEST LOOP 3
C832 B7 580C             STA A   SYSMON    IS COMPLETE.
C835 86 00               LDA A   #0        CLEAR MENU.
C837 39                  RTS
                  ***************************************************************
                  ***************   SUBROUTINE (TEST LOOP #4)   ***************
                  ***************************************************************
                  *
                  *             THIS ROUTINE DETERMINES WHETHER
                  *      THE SIMULATOR CARD CAN TRANSMIT AND RECEIVE DATA.
                  *
                  ******************   INITIALIZATION    ************************
C838 B7 0199      TSTLP4 STA A   SCRTCH    SAVE MENU.
C83B 4F                  CLR A
C83C B7 021C             STA A   LOCKUP    CLEAR INPUT SYNCH FLAG.
C83F B7 021F             STA A   TIMFLG    CLEAR TIMEOUT FLAG
C842 B7 021E             STA A   DATFLG    CLEAR DATA RECV. FLAG
C845 B7 0190             STA A   ERRORS    CLEAR ALL ERROR FLAGS.
C848 B7 021D             STA A   TIMOUT    CLEAR TIMEOUT COUNTER.
C84B B7 0221             STA A   TXCOMP    CLEAR TRANSMISSION COMPLETE FLAG.
C84E B7 023D             STA A   RIN       SET RECEIVED DATA READ AND WRITE
C851 B7 023F             STA A   WIN       POINTERS TO BEGINNING OF SIMU.
C854 B7 0235             STA A   ENDIN     RECEIVE BUFFER.
C857 B6 0188             LDA A   STATUS    CLEAR 'SIMULATION CARD ERROR' FLAG.
C85A 84 DF               AND A   #%11011111
C85C B7 0188             STA A   STATUS
C85F 86 05               LDA A   #5        SET FRAME COUNT TO ACCEPT 4 FRAMES
C861 B7 0227             STA A   FRMCNT    AFTER TRANSMISSION HAS COMPLETED.
C864 86 00               LDA A   #BUFSIB
C866 B7 023E             STA A   RIN+1
C869 B7 0240             STA A   WIN+1
C86C 86 1F               LDA A   #BUFSIE    SET UP SIMU. RECEIVE
C86E B7 0236             STA A   ENDIN+1    BUFFER UPPER BOUNDARY.
C871 CE C000             LDX     #TBLTXD    SET TRANSMIT POINTER TO
C874 FF 0241             STX     ROT        BEGINNING OF TRANSMIT TABLE.
C877 CE C01F             LDX     #TBLTXD+31    SET UP TRANSMIT TABLE
C87A FF 0237             STX     ENDOT      UPPER BOUNDARY.
C87D CE C010             LDX     #TBLTXD+16    SET UP LOOKUP (TRANSMIT)
C880 FF 0243             STX     LKPPTR     TABLE READ POINTER.
C883 86 3F               LDA A   #$3F       SET UP CONFIGURATION CONTROL
C885 B7 580A             STA A   PIAFB2     FOR SELF TESTING.
C888 86 22               LDA A   #%00100010    INDICATE TEST LOOP 4
C88A B7 580C             STA A   SYSMON     IS EXECUTING.
C88D 86 01               LDA A   #1
C88F B7 0222             STA A   TXFLAG     ENABLE DATA TRANSMISSION.
C892 B7 0220             STA A   RCVFLG     ENABLE DATA RECORDING
```

```
00811 C895 0E                CLI                ENABLE INPUT INTERRUPTS.
00812                 ****************   INITIALIZATION COMPLETE   ****************
00813 C896 B6 021F TLP41     LDA A   TIMFLG     TIMEOUT OCCUR?
00814 C899 26 31             BNE     TLP42
00815 C89B B6 023E           LDA A   RIN+1      DATA AVAILABLE?  IF NOT, WAIT.
00816 C89E B1 0240           CMP A   WIN+1
00817 C8A1 27 F3             BEQ     TLP41
00818 C8A3 FE 023D           LDX     RIN        GET RECEIVED FRAME.
00819 C8A6 A6 00             LDA A   0,X
00820 C8A8 E6 01             LDA B   1,X
00821 C8AA FE 0243           LDX     LKPPTR     COMPARE TO CORRESPONDING
00822 C8AD A1 00             CMP A   0,X        LOOKUP (TRANSMIT) FRAME.
00823 C8AF 26 23             BNE     TLP43
00824 C8B1 E1 01             CMP B   1,X
00825 C8B3 26 1F             BNE     TLP43
00826 C8B5 08                INX                UPDATE LOOKUP (TRANSMIT)
00827 C8B6 08                INX                TABLE READ POINTER.
00828 C8B7 FF 0243           STX     LKPPTR
00829 C8BA B6 023E           LDA A   RIN+1      UPDATE READ POINTER TO
00830 C8BD 8B 02             ADD A   #2         SIMU. RECEIVE BUFFER.
00831 C8BF B7 023E           STA A   RIN+1
00832 C8C2 B6 0244           LDA A   LKPPTR+1     SEARCH COMPLETE?
00833 C8C5 B1 0238           CMP A   ENDOT+1
00834 C8C8 22 1A             BHI     TLP44      IF YES, RETURN FROM SUBROUTINE.
00835 C8CA 20 CA             BRA     TLP41
00836 C8CC B6 0190 TLP42     LDA A   ERRORS
00837 C8CF B7 0189           STA A   STATUS+1
00838 C8D2 20 08             BRA     TLP45
00839 C8D4 B6 0190 TLP43     LDA A   ERRORS
00840 C8D7 8A 08             ORA A   #%00001000   SET 'INCORRECT DATA RECEIVED' ERROR.
00841 C8D9 B7 0189           STA A   STATUS+1
00842 C8DC B6 0188 TLP45     LDA A   STATUS     SET 'DIAGNOSTIC CARD' ERROR.
00843 C8DF 8A 20             ORA A   #%00100000
00844 C8E1 B7 0188           STA A   STATUS
00845                 ********************    EXIT ROUTINE   ********************
00846 C8E4 0F         TLP44  SEI                DISABLE INPUT INTERRUPTS.
00847 C8E5 7F 0220           CLR     RCVFLG     DISABLE DATA RECORDING.
00848 C8E8 7F 0222           CLR     TXFLAG     DISABLE DATA TRANSMISSION.
00849 C8EB 86 FF             LDA A   #$FF       SET CONFIGURATION CONTROL
00850 C8ED B7 580A           STA A   PIAPB2     BACK TO NORMAL OPERATION.
00851 C8F0 86 02             LDA A   #%00000010   INDICATE TEST LOOP 4
00852 C8F2 B7 580C           STA A   SYSMON     IS COMPLETED.
00853 C8F5 B6 0199           LDA A   SCRTCH     RECALL SAVED MENU.
00854 C8F8 39                RTS
00855                 ***********************************************************
00856                 ***************   SUBROUTINE (TEST LOOP #5)   ***************
00857                 ***********************************************************
00858                 *
00859                 *            THIS ROUTINE DETERMINES THE STATUS
00860                 *               OF SURVEILLANCE CHANNEL #1
00861                 *
00862                 ********************   INITIALIZATION   ********************
```

```
00863 C8F9 B7 0199 TSTLP5 STA A  SCRTCH   SAVE MENU.
00864 C8FC 4F              CLR A
00865 C8FD B7 021C         STA A  LOCKUP   CLEAR INPUT SYNCH FLAG.
00866 C900 B7 021F         STA A  TIMFLG   CLEAR TIMEOUT FLAG.
00867 C903 B7 021E         STA A  DATFLG   CLEAR DATA RECEIVED FLAG.
00868 C906 B7 0190         STA A  ERRORS   CLEAR ALL ERROR FLAGS.
00869 C909 B7 0191         STA A  ERRORS+1
00870 C90C B7 0192         STA A  ERRORS+2
00871 C90F B7 021D         STA A  TIMOUT   CLEAR TIMEOUT COUNTER.
00872 C912 B7 0221         STA A  TXCOMP   CLEAR TRANSMISSION COMPLETE FLAG.
00873 C915 B7 0224         STA A  EOB      CLEAR END OF RECV. BUFFER DETECTED FLAG.
00874 C918 B7 0229         STA A  IDLCNT   CLEAR IDLE COUNTER.
00875 C91B B7 023D         STA A  RIN
00876 C91E B7 023F         STA A  WIN
00877 C921 B7 0235         STA A  ENDIN
00878 C924 86 20           LDA A  #BUFC1B   SET RECEIVE DATA READ AND WRITE
00879 C926 B7 023E         STA A  RIN+1    POINTERS TO BEGINNING OF CHANNEL #1
00880 C929 B7 0240         STA A  WIN+1    RECEIVE BUFFER.
00881 C92C 86 D3           LDA A  #BUFC1E   SET UP CHANNEL #1 RECEIVE
00882 C92E B7 0236         STA A  ENDIN+1   BUFFER UPPER BOUNDARY.
00883 C931 B6 0188         LDA A  STATUS   CLEAR 'CHANNEL #1 FAILURE' FLAG.
00884 C934 84 BF           AND A  #%10111111
00885 C936 B7 0188         STA A  STATUS
00886 C939 86 09           LDA A  #9       SET FRAME COUNT TO ACCEPT 8 FRAMES
00887 C93B B7 0227         STA A  FRMCNT   AFTER TRANSMISSION HAS COMPLETED.
00888 C93E CE C000         LDX    #TBLTXD   SET TRANSMIT POINTER TO
00889 C941 FF 0241         STX    ROT      BEGINNING OF TRANSMIT TABLE.
00890 C944 CE C07F         LDX    #TX1END   SET UP TRANSMIT TABLE
00891 C947 FF 0237         STX    ENDOT    UPPER BOUNDARY.
00892 C94A CE C100         LDX    #TBLLKP   SET LOOKUP POINTER TO
00893 C94D FF 0243         STX    LKPPTR   BEGINNING OF LOOKUP TABLE.
00894 C950 CE C16F         LDX    #LKPEND   SET UP LOOKUP TABLE
00895 C953 FF 0239         STX    ENDUP    UPPER BOUNDARY.
00896 C956 86 78           LDA A  #$78     SET UP CONFIGURATION CONTROL
00897 C958 B7 580A         STA A  PIAPB2   FOR CHANNEL 1 TESTING.
00898 C95B 86 42           LDA A  #%01000010   INDICATE THAT TEST LOOP 5
00899 C95D B7 580C         STA A  SYSMON   IS EXECUTING.
00900 C960 86 01           LDA A  #1
00901 C962 B7 0222         STA A  TXFLAG   ENABLE DATA TRANSMISSION.
00902 C965 B7 0220         STA A  RCVFLG   ENABLE DATA RECORDING.
00903                 ****************   INITIALIZATION COMPLETE   ******************
00904 C968 7E C9DB         JMP    TLP561
00905                 ***********************************************************
00906                 ***************   SUBROUTINE (TEST LOOP #6)   ****************
00907                 ***********************************************************
00908                 *
00909                 *            THIS ROUTINE DETERMINES THE STATUS
00910                 *               OF SURVEILLANCE CHANNEL #2
00911                 *
00912                 *********************   INITIALIZATION   *********************
00913 C96B B7 0199 TSTLP6 STA A  SCRTCH   SAVE MENU
00914 C96E 4F              CLR A
```

```
00915 C96F B7 021C        STA A  LOCKUP   CLEAR INPUT SYNCH FLAG.
00916 C972 B7 021F        STA A  TIMFLG   CLEAR TIMEOUT FLAG.
00917 C975 B7 021E        STA A  DATFLG   CLEAR DATA RECEIVED FLAG.
00918 C978 B7 0190        STA A  ERRORS   CLEAR ALL ERROR FLAGS.
00919 C97B B7 0191        STA A  ERRORS+1
00920 C97E B7 0192        STA A  ERRORS+2
00921 C981 B7 021D        STA A  TIMOUT   CLEAR TIMEOUT COUNTER.
00922 C984 B7 0221        STA A  TXCOMP   CLEAR TRANSMISSION COMPLETE FLAG.
00923 C987 B7 0224        STA A  EOB      CLEAR END OF RECV. BUFFER DETECTED FLAG.
00924 C98A B7 0229        STA A  IDLCNT   CLEAR IDLE COUNTER.
00925 C98D B7 023D        STA A  RIN
00926 C990 B7 023F        STA A  WIN
00927 C993 96 D4          LDA A  #BUFC2B   SET RECEIVE DATA READ AND WRITE
00928 C995 B7 023E        STA A  RIN+1    POINTERS TO BEGINNING OF CHANNEL #2
00929 C998 B7 0240        STA A  WIN+1    RECEIVE BUFFER.
00930 C99B CE 0187        LDX    #BUFC2E   SET UP CHANNEL #2 RECEIVE
00931 C99E FF 0235        STX    ENDIN    BUFFER UPPER BOUNDARY.
00932 C9A1 B6 0188        LDA A  STATUS   CLEAR 'CHANNEL #2 FAILURE' FLAG.
00933 C9A4 B4 7F          AND A  #%01111111
00934 C9A6 B7 0188        STA A  STATUS
00935 C9A9 86 09          LDA A  #9       SET FRAME COUNT TO ACCEPT 8 FRAMES
00936 C9AB B7 0227        STA A  FRMCNT   AFTER TRANSMISSION HAS COMPLETED.
00937 C9AE CE C000        LDX    #TBLTXD   SET TRANSMIT POINTER TO
00938 C9B1 FF 0241        STX    ROT      BEGINNING OF TRANSMIT TABLE.
00939 C9B4 CE C07F        LDX    #TX1END   SET UP TRANSMIT TABLE
00940 C9B7 FF 0237        STX    ENDOT    UPPER BOUNDARY.
00941 C9BA CE C100        LDX    #TBLLKP   SET LOOKUP POINTER TO
00942 C9BD FF 0243        STX    LKPPTR   BEGINNING OF LOOKUP TABLE.
00943 C9C0 CE C16F        LDX    #LKPEND   SET UP LOOKUP TABLE
00944 C9C3 FF 0239        STX    ENDUP    UPPER BOUNDARY.
00945 C9C6 86 87          LDA A  #$87     SET UP CONFIGURATION CONTROL
00946 C9C8 B7 580A        STA A  PIAPB2   FOR CHANNEL 2 TESTING.
00947 C9CB 86 82          LDA A  #%10000010   INDICATE THAT TEST LOOP 6
00948 C9CD B7 580C        STA A  SYSMON   IS EXECUTING.
00949 C9D0 86 01          LDA A  #1
00950 C9D2 B7 0222        STA A  TXFLAG   ENABLE DATA TRANSMISSION.
00951 C9D5 B7 0220        STA A  RCVFLG   ENABLE DATA RECORDING.
00952                 ****************   INITIALIZATION COMPLETE   ******************
00953 C9D8 7E C9DB        JMP    TLP561
00954                 ***************************************************************
00955                 *************  SURV. CHANNEL DIAGNOSTIC ROUTINE   **************
00956                 ***************************************************************
00957 C9DB 0E         TLP561 CLI             ENABLE INPUT INTERRUPTS.
00958 C9DC B6 021F        LDA A  TIMFLG   TIMEOUT OCCUR?
00959 C9DF 27 03          BEQ    TLP562
00960 C9E1 7E CC1C        JMP    EXIT
00961 C9E4 B6 023E TLP562 LDA A  RIN+1    DATA AVAILABLE?  IF NOT; WAIT.
00962 C9E7 B1 0240        CMP A  WIN+1
00963 C9EA 27 EF          BEQ    TLP561
00964 C9EC FE 023D        LDX    RIN      GET RECEIVE FRAME.
00965 C9EF A6 00          LDA A  0,X
00966 C9F1 E6 01          LDA B  1,X
```

```
00967 C9F3 FE 0243          LDX    LKPPTR   DOES THE RECEIVE FRAME
00968 C9F6 A1 00            CMP A  0,X      MATCH THE LOOKUP FRAME?
00969 C9F8 26 2C            BNE    CKSTAT
00970 C9FA E1 01            CMP B  1,X
00971 C9FC 26 28            BNE    CKSTAT
00972 C9FE 7F 0229          CLR    IDLCNT   RESET IDLE COUNTER.
00973 CA01 08       TLP564  INX              UPDATE LOOKUP POINTER.
00974 CA02 08               INX
00975 CA03 FF 0243          STX    LKPPTR
00976 CA06 BD CC79          JSR    UPDATE   UPDATE DATA RECEIVE
00977 CA09 B6 0224          LDA A  EOB      BUFFER READ POINTER.
00978 CA0C 27 03            BEQ    TLP563
00979 CA0E 7E CC1C          JMP    EXIT
00980 CA11 B6 0243  TLP563  LDA A  LKPPTR   SEARCH COMPLETE?
00981 CA14 B1 0239          CMP A  ENDUP    IF YES, JUMP TO EXIT ROUTINE.
00982 CA17 22 0A            BHI    TLP565
00983 CA19 26 C0            BNE    TLP561
00984 CA1B B6 0244          LDA A  LKPPTR+1
00985 CA1E B1 023A          CMP A  ENDUP+1
00986 CA21 23 B8            BLS    TLP561
00987 CA23 7E CC1C  TLP565  JMP    EXIT
00988               ********************   STATUS CHECK   ************************
00989               *
00990               *      THIS ROUTINE DETERMINES IF A STATUS MESSAGE
00991               *                WAS RECEIVED CORRECTLY.
00992               *
00993               ***************************************************************
00994 CA26 81 0C    CKSTAT CMP A  #STAT0   STATUS HEADER DETECTED?
00995 CA28 27 03            BEQ    CKSTA8
00996 CA2A 7E CAB5          JMP    CKIDLE   IF NOT, TEST FOR IDLE CHARACTER.
00997 CA2D C1 38    CKSTA8 CMP B  #STAT1   IF YES, VARIFY THAT THE STATUS
00998 CA2F 27 03            BEQ    CKSTA9   MESSAGE WAS RECEIVED CORRECTLY.
00999 CA31 7E CAB5          JMP    CKIDLE   SET 'FRAME COUNT' TO 4.
01000 CA34 86 04    CKSTA9 LDA A  #4
01001 CA36 B7 0228          STA A  STACNT
01002 CA39 7C 0229          INC    IDLCNT   INCREMENT IDLE COUNTER.
01003 CA3C B6 0227          LDA A  FRMCNT   DELAY RECIEVER TERMINATION
01004 CA3F 8B 05            ADD A  #5       ALLOWING FOR STATUS MESSAGE.
01005 CA41 B7 0227          STA A  FRMCNT
01006 CA44 BD CC79  CKSTA1  JSR    UPDATE   UPDATE RECEIVED DATA
01007 CA47 B6 0224          LDA A  EOB      BUFFER READ POINTER.
01008 CA4A 27 03            BEQ    CKSTA6   EXIT IF AT END OF BUFFER.
01009 CA4C 7E CC1C          JMP    EXIT
01010 CA4F B6 023E  CKSTA6  LDA A  RIN+1    NEXT FRAME AVAILABLE:
01011 CA52 B1 0240          CMP A  WIP+1
01012 CA55 27 F8            BEQ    CKSTA6
01013 CA57 FE 023D          LDX    RIN      GET FRAME FROM RECV. BUFFER.
01014 CA5A A6 00            LDA A  0,X
01015 CA5C E6 01            LDA B  1,X
01016 CA5E 7C 0229          INC    IDLCNT   INCREMENT IDLE COUNTER.
01017 CA61 7A 0228          DEC    STACNT   END OF STATUS MESSAGE?
01018 CA64 27 12            BEQ    CKSTA2   IF YES, SEARCH FOR IDLE CHARACTER.
```

```
01019 CA66 81 00          CMP A  #$00     DATA FIELD SHOULD BE ALL ZEROS.
01020 CA68 26 04          BNE    CKSTA3
01021 CA6A C1 08          CMP B  #$08
01022 CA6C 27 D6          BEQ    CKSTA1
01023 CA6E B6 0192 CKSTA3 LDA A  ERRORS+2   IF NOT, SET 'INCORRECT STATUS
01024 CA71 8A 80          ORA A  #%10000000   MESSAGE' ERROR THEN CONTINUE
01025 CA73 B7 0192        STA A  ERRORS+2   VARIFYING STATUS MESSAGE.
01026 CA76 20 CC          BRA    CKSTA1
01027 CA78 81 1F   CKSTA2 CMP A  #IDLE0   VARIFY IDLE CHARACTER
01028 CA7A 26 04          BNE    CKSTA4   AFTER STATUS MESSAGE.
01029 CA7C C1 F8          CMP B  #IDLE1   IF NOT FOUND SET
01030 CA7E 27 27          BEQ    CKSTA5   'INCORRECT IDLE' ERROR.
01031 CA80 B6 0190 CKSTA4 LDA A  ERRORS
01032 CA83 8A 10          ORA A  #%00010000
01033 CA85 B7 0190        STA A  ERRORS
01034 CA88 FE 023D        LDX    RIN      TEST TO SEE IF IDLE WAS MISSSING.
01035 CA8B A6 00          LDA A  0,X
01036 CA8D E6 01          LDA B  1,X
01037 CA8F FE 0243        LDX    LKPPTR   GET RECV. DATA FRAME AND COMPARE
01038 CA92 A1 00          CMP A  0,X      IT TO THE CURRENT LOOKUP FRAME.
01039 CA94 26 11          BNE    CKSTA5   IF BOTH FRAMES MATCH SET ERROR
01040 CA96 E1 01          CMP B  1,X      'MISSSING IDLE AFTER STATUS MESSAGE'
01041 CA98 26 0D          BNE    CKSTA5   AND CLEAR ERROR 'INCORRECT IDLE'.
01042 CA9A B6 0190        LDA A  ERRORS   'MISSING IDLE AFTER STATUS MESSAGE'
01043 CA9D 8A 20          ORA A  #%00100000   ERROR SET AND 'INCORRECT IDLE'
01044 CA9F 84 EF          AND A  #%11101111   CLEARED.
01045 CAA1 B7 0190        STA A  ERRORS
01046 CAA4 7E C9DB        JMP    TLP561
01047 CAA7 BD CC79 CKSTA5 JSR    UPDATE   UPDATE DATA RECEIVE
01048 CAAA B6 0224        LDA A  EOB      BUFFER READ POINTER.
01049 CAAD 27 03          BEQ    CKSTA7
01050 CAAF 7E CC1C        JMP    EXIT     EXIT IF AT END OF BUFFER.
01051 CAB2 7E C9DB CKSTA7 JMP    TLP561
01052                ***********************   IDLE CHECK   ***********************
01053                *
01054                *      THIS ROUTINE DETERMINES IF ADDITIONAL IDLES HAVE BEEN
01055                *      ADDED TO THE DATA STREAM OR IF A MESSAGE IS MISSING.
01056                *
01057                ***************************************************************
01058 CAB5 81 1F   CKIDLE CMP A  #IDLE0   IDLE CHARACTER FOUND?
01059 CAB7 27 03          BEQ    CKIDL7
01060 CAB9 7E CB74        JMP    CKDATA
01061 CABC C1 F8   CKIDL7 CMP B  #IDLE1
01062 CABE 27 03          BEQ    CKIDL9
01063 CAC0 7E CB74        JMP    CKDATA
01064 CAC3 BD CCA7 CKIDL9 JSR    MTYPE
01065 CAC6 7C 0229 CKIDL2 INC    IDLCNT   INCREMENT IDLE COUNT.
01066 CAC9 BD CC79        JSR    UPDATE   UPDATE DATA RECEIVE
01067 CACC B6 0224        LDA A  EOB      BUFFER READ POINTER.
01068 CACF 27 03          BEQ    CKID14
01069 CAD1 7E CB2B        JMP    CKIDL2
01070 CAD4 B6 023E CKID14 LDA A  RINH1    NEXT FRAME AVAILABLE?
```

```
01071 CAD7 B1 0240          CMP A  WIN+1
01072 CADA 27 F8            BEQ    CKID14
01073 CADC FE 023D          LDX    RIN       GET RECV. FRAME.
01074 CADF A6 00            LDA A  0,X
01075 CAE1 E6 01            LDA B  1,X
01076 CAE3 81 1F            CMP A  #IDLE0    IDLE CHARACTER FOUND?
01077 CAE5 26 04            BNE    CKIDL1    IF YES, JUMP TO CKIDL2
01078 CAE7 C1 F8            CMP B  #IDLE1
01079 CAE9 27 DB            BEQ    CKIDL2
01080 CAEB FE 0243 CKIDL1   LDX    LKPPTR    LOOKUP FRAME MATCH THE RECEIVED FRAME?
01081 CAEE A1 00            CMP A  0,X       IF YES, SET THE 'EXTRA IDLES' FLAG.
01082 CAF0 26 0F            BNE    CKIDL3    IF NO, DETERMINE IF MESSAGE IS MISSING.
01083 CAF2 E1 01            CMP B  1,X
01084 CAF4 26 0B            BNE    CKIDL3
01085 CAF6 B6 0190          LDA A  ERRORS    'EXTRA IDLES' FLAG SET.
01086 CAF9 BA 40            ORA A  #%01000000
01087 CAFB B7 0190          STA A  ERRORS
01088 CAFE 7E C9DB          JMP    TLP561
01089 CB01 B7 0193 CKIDL3   STA A  TEMP      PEEK AHEAD BY 'IDLCNT' INTO LOOKUP TABLE.
01090 CB04 B6 0229          LDA A  IDLCNT
01091 CB07 08      CKIDL4   INX
01092 CB08 08               INX
01093 CB09 4A               DEC A
01094 CB0A 26 FB            BNE    CKIDL4
01095 CB0C B6 0193          LDA A  TEMP      COMPARE LOOKUP FRAME TO RECV. FRAME.
01096 CB0F A1 00            CMP A  0,X
01097 CB11 26 42            BNE    CKIDL5
01098 CB13 E1 01            CMP B  1,X
01099 CB15 26 3E            BNE    CKIDL5
01100 CB17 B6 0229          LDA A  IDLCNT    DOUBLE IDLE COUNT.
01101 CB1A 48               ASL A            ----------------------------------------
01102 CB1B 0C               CLC              \EX. IDLCNT = 8   / LKPPTR = $C0F6      \
01103 CB1C F6 0244          LDA B  LKPPTR+1   \    UPDATE LKPPTR BY 8 X 2 = 16 = $10  \
01104 CB1F 1B               ABA              \    LOWER BYTE = $F6 + $10 = $06/C = 1 \
01105 CB20 F6 0243          LDA B  LKPPTR    \    UPPER BYTE = $C0 + 0 + 1 = $C1     \
01106 CB23 C9 00            ADC B  #0        \    LKPPTR = $C106                     \
01107 CB25 B7 0244          STA A  LKPPTR+1   ----------------------------------------
01108 CB28 F7 0243          STA B  LKPPTR    UPDATE LOOKUP POINTER BY TWO TIMES IDLE COUNT.
01109 CB2B CE C170 CKIDL8   LDX    #TBLMSG    SET APPROPRIATE 'MESSAGE MISSING' ERROR(S).
01110 CB2E B6 0225          LDA A  OFFSET
01111 CB31 27 04   CKID10   BEQ    CKIDL6
01112 CB33 08               INX              UPDATE INDEX POINTER TO NEXT MESSAGE.
01113 CB34 4A               DEC A
01114 CB35 20 FA            BRA    CKID10
01115 CB37 B6 0191 CKIDL6   LDA A  ERRORS+1
01116 CB3A AA 00            ORA A  X
01117 CB3C B7 0191          STA A  ERRORS+1
01118 CB3F B6 0229          LDA A  IDLCNT    SUBTRACT 8 FROM THE IDLE COUNT.
01119 CB42 80 08            SUB A  #8        IF STILL POSITIVE, SET THE
01120 CB44 B7 0229          STA A  IDLCNT    NEXT 'MISSING MESSAGE' ERROR.
01121 CB47 22 03            BHI    CKID11
01122 CB49 7E C9DE          JMP    TLP561
```

```
01123 CB4C 08        CKID11 INX
01124 CB4D 8C C177          CPX    #TBLMSG+7
01125 CB50 26 E5            BNE    CKIDL6
01126 CB52 7E CC1C          JMP    EXIT
01127 CB55 CE C170 CKIDL5 LDX    #TBLMSG   SET APPROPRIATE
01128 CB58 B6 0225          LDA A  OFFSET   'MISSING MESSAGE' FLAG.
01129 CB5B 27 04     CKID13 BEQ    CKID12
01130 CB5D 08               INX
01131 CB5E 4A               DEC A
01132 CB5F 20 FA            BRA    CKID13
01133 CB61 B6 0191 CKID12 LDA A  ERRORS+1
01134 CB64 AA 00            ORA A  X
01135 CB66 B7 0191          STA A  ERRORS+1
01136 CB69 B6 0190          LDA A  ERRORS   SET 'PANIC' FLAG.
01137 CB6C 8A 80            ORA A  #%10000000
01138 CB6E B7 0190          STA A  ERRORS
01139 CB71 7E CC1C          JMP    EXIT
01140                *************************  DATA CHECK  *************************
01141                *
01142                *         THIS ROUTINE IDENTIFIES INCORRECT MESSAGES.
01143                *
01144                ****************************************************************
01145 CB74 BD CCA7 CKDATA JSR    MTYPE    DETERMINE CURRENT MESSAGE BEING VARIFIED.
01146 CB77 FE 0243          LDX    LKPPTR
01147 CB7A B7 0193          STA A  TEMP
01148 CB7D B6 0225          LDA A  OFFSET   IF THE PROBLEM IS IN VARIFYING THE
01149 CB80 27 4C            BEQ    CKDAT1   FIRST MESSAGE, GO TEST IF IT IS MISSING.
01150 CB82 A6 00            LDA A  0,X      IS THE LOOKUP FRAME AN IDLE CHARACTER?
01151 CB84 B1 C000          CMP A  TBLTXD   IF YES, TEST WHETHER A STATUS MESSAGE
01152 CB87 26 07            BNE    CKDAT2   HAS BEEN INSERTED BETWEEN TWO SEARCH
01153 CB89 E6 01            LDA B  1,X      MESSAGES.
01154 CB8B F1 C001          CMP B  TBLTXD+1   IF NOT, SET APPROPRIATE ERRORS.
01155 CB8E 27 65            BEQ    CKDAT4
01156 CB90 CE C170 CKDAT2 LDX    #TBLMSG
01157 CB93 B6 0225          LDA A  OFFSET
01158 CB96 27 04     CKDAT8 BEQ    CKDAT7
01159 CB98 08               INX              UPDATE INDEX POINTER TO NEXT MESSAGE.
01160 CB99 4A               DEC A
01161 CB9A 20 FA            BRA    CKDAT8
01162 CB9C B6 0192 CKDAT7 LDA A  ERRORS+2   SET APPROPRIATE INCORRECT
01163 CB9F AA 00            ORA A  X        REFORMATTED MESSAGE ERROR.
01164 CBA1 B7 0192          STA A  ERRORS+2
01165 CBA4 B6 023E          LDA A  RIN+1    VERIFY THAT THE NEXT RECEIVED FRAME
01166 CBA7 8B 04            ADD A  #4       IS AVAILABLE BEFORE ATTEMPTING TO
01167 CBA9 B1 0240 CKDAT9 CMP A  WIN+1    COMPARE THE FRAME TO ITS ASSOCIATED
01168 CBAC 22 FB            BHI    CKDAT9   LOOK UP FRAME.
01169 CBAE FE 023D          LDX    RIN      PEEK AHEAD AT NEXT RECEIVED FRAME.
01170 CBB1 A6 02            LDA A  2,X
01171 CBB3 E6 03            LDA B  3,X
01172 CBB5 FE 0243          LDX    LKPPTR   COMPARE IT TO NEXT LOOKUP FRAME.
01173 CBB8 A1 02            CMP A  2,X      IF THEY DO NOT MATCH:
01174 CBBA 26 07            BNE    CKDAT3   SET 'PANIC' FLAG.
```

```
01175 CBBC E1 03          CMP B  3,X
01176 CBBE 26 03          BNE    CKDAT3
01177 CBC0 7E CA01        JMP    TLP564
01178 CBC3 B6 0190 CKDAT3 LDA A  ERRORS   'PANIC' FLAG SET TO 1.
01179 CBC6 BA 80          ORA A  #%10000000
01180 CBC8 B7 0190        STA A  ERRORS
01181 CBCB 7E CC1C        JMP    EXIT     EXIT ROUTINE.
01182 CBCE B6 0193 CKDAT1 LDA A  TEMP     PEEK AHEAD INTO LOOKUP TABLE AT
01183 CBD1 A1 10          CMP A  16,X     NEXT MESSAGE HEADER AND COMPARE
01184 CBD3 26 BB          BNE    CKDAT2   TO CURRENT RECEIVE FRAME.  IF THEY MATCH
01185 CBD5 E1 11          CMP B  17,X     SET ERROR 'MESSAGE 1 MISSING'.
01186 CBD7 26 B7          BNE    CKDAT2
01187 CBD9 B6 0191        LDA A  ERRORS+1   ERROR 'MESSAGE 1 MISSING' SET TO 1.
01188 CBDC BA C170        ORA A  TBLMSG
01189 CBDF B7 0191        STA A  ERRORS+1
01190 CBE2 B6 0244        LDA A  LKPPTR+1   UPDATE LOOKUP POINTER TO NEXT MESSAGE.
01191 CBE5 F6 0243        LDA B  LKPPTR
01192 CBE8 8B 10          ADD A  #16
01193 CBEA C9 00          ADC B  #0
01194 CBEC B7 0244        STA A  LKPPTR+1
01195 CBEF F7 0243        STA B  LKPPTR
01196 CBF2 7E C9DB        JMP    TLP561
01197 CBF5 08       CKDAT4 INX             UPDATE LOOKUP POINTER.
01198 CBF6 08              INX
01199 CBF7 FF 0243        STX    LKPPTR
01200 CBFA A6 00          LDA A  0,X      GET LOOKUP FRAME.
01201 CBFC E6 01          LDA B  1,X      IS LOOKUP FRAME AN IDLE CHARACTER?
01202 CBFE B1 C000        CMP A  TBLTXD   IF YES, UPDATE LOOKUP POINTER AND
01203 CC01 26 05          BNE    CKDAT5   CHECK NEXT FRAME FOR IDLE.
01204 CC03 F1 C001        CMP B  TBLTXD+1   IF NOT, TEST FOR DATA MATCH.
01205 CC06 27 ED          BEQ    CKDAT4
01206 CC08 FE 023D CKDAT5 LDX    RIN
01207 CC0B A1 00          CMP A  0,X
01208 CC0D 26 07          BNE    CKDAT6
01209 CC0F E1 01          CMP B  1,X
01210 CC11 26 03          BNE    CKDAT6
01211 CC13 7E C9DB        JMP    TLP561
01212 CC16 7C 0225 CKDAT6 INC    OFFSET
01213 CC19 7E CB90        JMP    CKDAT2
01214              ***********************   EXIT ROUTINE   **********************
01215 CC1C 0F       EXIT   SEI             DISABLE INPUT INTERRUPTS.
01216 CC1D B6 0199         LDA A  SCRTCH   TEST FOR LOOP 1.
01217 CC20 27 06           BEQ    TLP5
01218 CC22 B6 580A         LDA A  PIAPB2   DETERMINE CURRENT
01219 CC25 48              ASL A          DIAG. LOOP IN USE.
01220 CC26 25 21           BCS    TLP6
01221 CC28 F6 0190 TLP5    LDA B  ERRORS   LOAD ERRORS IN STATUS FILE.
01222 CC2B F7 018A         STA B  STATUS+2
01223 CC2E 17              TBA
01224 CC2F F6 0191         LDA B  ERRORS+1
01225 CC32 F7 018B         STA B  STATUS+3
01226 CC35 1B              ABA
```

```
01227 CC36 F6 0192        LDA B  ERRORS+2
01228 CC39 F7 018C        STA B  STATUS+4
01229 CC3C 1B             ABA              UPDATE SYSTEM STATUS
01230 CC3D 27 29          BEQ    EXIT1     IF ERRORS OCCURED.
01231 CC3F B6 0188        LDA A  STATUS    FAILURE IN SURV. CHANNEL #1.
01232 CC42 8A 40          ORA A  #%01000000
01233 CC44 B7 0188        STA A  STATUS
01234 CC47 20 1F          BRA    EXIT1
01235 CC49 F6 0190 TLP6   LDA B  ERRORS    LOAD ERRORS IN STATUS FILE.
01236 CC4C F7 018D        STA B  STATUS+5
01237 CC4F 17             TBA
01238 CC50 F6 0191        LDA B  ERRORS+1
01239 CC53 F7 018E        STA B  STATUS+6
01240 CC56 1B             ABA
01241 CC57 F6 0192        LDA B  ERRORS+2
01242 CC5A F7 018F        STA B  STATUS+7
01243 CC5D 1B             ABA              UPDATE SYSTEM STATUS
01244 CC5E 27 08          BEQ    EXIT1     IF ERRORS OCCURED.
01245 CC60 B6 0188        LDA A  STATUS    FAILURE IN SURV. CHANNEL #2.
01246 CC63 8A 80          ORA A  #%10000000
01247 CC65 B7 0188        STA A  STATUS
01248 CC68 7F 0222 EXIT1  CLR    TXFLAG    DISABLE DATA TRANSMISSION.
01249 CC6B 86 FF          LDA A  #$FF      SET CONFIGURATION CONTROL
01250 CC6D B7 580A        STA A  PIAPB2    BACK TO NORMAL OPERATION.
01251 CC70 86 02          LDA A  #%00000010   INDICATE TEST LOOP
01252 CC72 B7 580C        STA A  SYSMON    IS FINISHED.
01253 CC75 B6 0199        LDA A  SCRTCH    RECALL SAVED MENU.
01254 CC78 39             RTS
01255                 ***************************************************************
01256                 ******************  SUBROUTINE  (UPDATE)  ******************
01257                 ***************************************************************
01258                 *
01259                 * THIS ROUTINE UPDATES THE RECEIVED DATA BUFFER READ POINTER
01260                 * AND COMPARES IT TO THE UPPER ADDRESS OF THE RECEIVE BUFFER.
01261                 * IF THE READ POINTER EXCEEDS THE UPPER ADDRESS AN 'INCOMPLETE
01262                 * SEARCH' ERROR IS SET AND THE 'END OF BUFFER' FLAG  IS
01263                 * RAISED TO INITIATE TERMINATION OF THE TEST LOOP.
01264                 *
01265                 ***************************************************************
01266 CC79 B7 019A UPDATE STA A  SCRTCH+1   SAVE ACC 'A' DATA.
01267 CC7C FE 023D        LDX    RIN       UPDATE RECV. DATA
01268 CC7F 08             INX              BUFFER READ POINTER.
01269 CC80 08             INX
01270 CC81 FF 023D        STX    RIN
01271 CC84 B6 023D        LDA A  RIN       END OF RECEIVE DATA BUFFER?
01272 CC87 B1 0235        CMP A  ENDIN     IF NOT; RETURN FROM SUBROUTINE.
01273 CC8A 22 0E          BHI    UPDAT1    IF YES; SET 'END OF BUFFER'
01274 CC8C 26 09          BNE    UPDAT2    FLAG AND SET 'INCOMPLETE SEARCH'
01275 CC8E B6 023E        LDA A  RIN+1     ERROR.
01276 CC91 B1 0236        CMP A  ENDIN+1
01277 CC94 22 04          BHI    UPDAT1
01278 CC96 B6 019A UPDAT2 LDA A  SCRTCH+1   RECALL SAVED ACC 'A' DATA.
```

```
01279 CC99 39                RTS
01280 CC9A 86 01    UPDAT1   LDA A  #1        IF YES, SET 'END OF BUFFER'
01281 CC9C B7 0224           STA A  EOB       FLAG AND SET 'INCOMPLETE SEARCH'
01282 CC9F B6 0190           LDA A  ERRORS    ERROR.
01283 CCA2 8A 08             ORA A  #%00001000
01284 CCA4 B7 0190           STA A  ERRORS
01285                 ***********************************************************
01286                 ***************  SUBROUTINE  (MESSAGE TYPE)  ****************
01287                 ***********************************************************
01288                 *
01289                 *          THIS ROUTINE DETERMINES WHICH MESSAGE
01290                 *              THE LOOKUP POINTER IS SET TO.
01291                 *
01292                 ***********************************************************
01293 CCA7 B7 019A MTYPE  STA A  SCRTCH+1   SAVE ACC 'A' DATA.
01294 CCAA F7 019B        STA B  SCRTCH+2   SAVE ACC 'B' DATA.
01295 CCAD CE C100        LDX    #TBLLKP   GET LOOKUP TABLE START ADDRESS
01296 CCB0 FF 0194        STX    TEMP+1    AND STORE IN TEMP 1 AND 2.
01297 CCB3 7F 0225        CLR    OFFSET    SET MESSAGE TYPE PTR TO FIRST MESSAGE.
01298 CCB6 B6 0243        LDA A  LKPPTR    GET CURRENT LOOKUP POINTER VALUE.
01299 CCB9 F6 0244        LDA B  LKPPTR+1
01300 CCBC C0 10    ML3   SUB B  #16       SUBTRACT 16 FROM LOOKUP POINTER.
01301 CCBE 82 00          SBC A  #0
01302 CCC0 B1 0194        CMP A  TEMP+1    COMPARE LOOKUP POINTER TO START ADDRESS.
01303 CCC3 22 10          BHI    ML1       IF GREATER THEN OR EQUAL TO, POINT TO
01304 CCC5 26 07          BNE    ML2       NEXT MESSAGE.
01305 CCC7 F1 0195        CMP B  TEMP+2
01306 CCCA 22 09          BHI    ML1
01307 CCCC 27 07          BEQ    ML1
01308 CCCE B6 019A ML2    LDA A  SCRTCH+1   RECALL SAVED ACC 'A' DATA
01309 CCD1 F6 019B        LDA B  SCRTCH+2   RECALL SAVED ACC 'B' DATA
01310 CCD4 39             RTS
01311 CCD5 7C 0225 ML1    INC    OFFSET    POINTER TO NEXT MESSAGE.
01312 CCD8 20 E2          BRA    ML3
01313                 ***********************************************************
01314                 **************   SUBROUTINE (OPERATIONAL MODE)   **************
01315                 ***********************************************************
01316 CCDA 86 C9    OPER1 LDA A  #$C9      SET CONFIGURATION CONTROL
01317 CCDC B7 580A        STA A  PIAPB2    FOR BY-PASS MODE.
01318 CCDF 39             RTS
01319                 ***********************************************************
01320                 ******************  SUBROUTINE (DELAY)  ******************
01321                 ***********************************************************
01322                 *
01323                 *       THIS ROUTINE SETS UP A TWO SECOND PROGRAM PAUSE
01324                 *
01325                 ***********************************************************
01326 CCE0 C6 00    DELAY LDA B  #0        INITIALIZE DELAY COUNT
01327 CCE2 F7 022A        STA B  DEL1
01328 CCE5 F7 022B        STA B  DEL2
01329 CCE8 C6 01          LDA B  #1
01330 CCEA F7 022C        STA B  DEL3
```

```
01331 CCED 01        DLYLP3 NOP
01332 CCEE 01        DLYLP2 NOP
01333 CCEF F6 022A   DLYLP1 LDA B  DEL1
01334 CCF2 CB 01            ADD B  #1
01335 CCF4 F7 022A          STA B  DEL1
01336 CCF7 24 F6            BCC    DLYLP1
01337 CCF9 F6 022B          LDA B  DEL2
01338 CCFC CB 01            ADD B  #1
01339 CCFE F7 022B          STA B  DEL2
01340 CD01 24 EB            BCC    DLYLP2
01341 CD03 F6 022C          LDA B  DEL3
01342 CD06 C0 01            SUB B  #1
01343 CD08 F7 022C          STA B  DEL3
01344 CD0B 24 E0            BCC    DLYLP3   EXIT WHEN THE CARRY BIT IS SET TO 1.
01345 CD0D 39               RTS
01346                *****************************************************************
01347                *****************   INPUT INTERRUPT ROUTINE   *****************
01348                *****************************************************************
01349 CD0E B6 0220   IRQ    LDA A  RCVFLG   DATA RECORDING ENABLED?
01350 CD11 27 12            BEQ    A7
01351 CD13 B6 021C          LDA A  LOCKUP   INTERFACE SYNCHRONIZED TO INPUT
01352 CD16 26 03            BNE    A10      DATA STREAM?
01353 CD18 7E CDA0          JMP    A1
01354 CD1B 7C 0226   A10    INC    BITCNT   NEXT FRAME AVAILABLE?
01355 CD1E B6 0226          LDA A  BITCNT   IF NOT, CLEAR INPUT
01356 CD21 81 0D            CMP A  #13      INTERRUPT AND RETURN.
01357 CD23 27 07            BEQ    A4
01358 CD25 B6 5800   A7     LDA A  PIAPA0   CLEAR INPUT INTERRUPT.
01359 CD28 B6 5804          LDA A  PIAPA1
01360 CD2B 3B               RTI
01361 CD2C 7F 0226   A4     CLR    BITCNT   RESET BIT COUNTER.
01362 CD2F B6 0221          LDA A  TXCONF   IF TRANSMISSION IS COMPLETE
01363 CD32 27 0B            BEQ    A5       START INHIBIT RECORDING SEQUENCE.
01364 CD34 7A 0227          DEC    FRMCNT
01365 CD37 B6 0227          LDA A  FRMCNT
01366 CD3A 26 03            BNE    A5
01367 CD3C 7F 0220          CLR    RCVFLG
01368 CD3F B6 021E   A5     LDA A  DATFLG   DATA FLAG SET?
01369 CD42 26 2C            BNE    A8
01370 CD44 B6 5800          LDA A  PIAPA0   GET FRAME
01371 CD47 F6 5804          LDA B  PIAPA1
01372 CD4A B1 C000          CMP A  TBLTXD   TEST FRAME FOR IDLE CHARACTER.
01373 CD4D 26 1B            BNE    A6
01374 CD4F F1 C001          CMP B  TBLTXD+1
01375 CD52 26 16            BNE    A6
01376 CD54 B6 021D          LDA A  TIMOUT   INCREMENT TIMEOUT COUNTER.
01377 CD57 8B 01            ADD A  #1
01378 CD59 B7 021D          STA A  TIMOUT
01379 CD5C 24 71            BCC    A3       IF TIMEOUT OCCURS,
01380 CD5E B6 0190          LDA A  ERRORS   SET 'IDLE CHARACTER LOCKUP ONLY'
01381 CD61 8A 02            ORA A  #%00000010   FLAG.
01382 CD63 B7 0190          STA A  ERRORS
```

```
01383 CD66 7C 021F        INC    TIMFLG   SET 'TIMEOUT' FLAG.
01384 CD69 3B             RTI
01385 CD6A 7F 021D A6     CLR    TIMOUT
01386 CD6D 7C 021E        INC    DATFLG
01387 CD70 FE 023F A8     LDX    WIN      STORE DATA FRAME.
01388 CD73 B6 5800        LDA A  PIAPA0
01389 CD76 F6 5804        LDA B  PIAPA1
01390 CD79 A7 00          STA A  0,X
01391 CD7B E7 01          STA B  1,X
01392 CD7D 08             INX             UPDATE INPUT WRITE POINTER.
01393 CD7E 08             INX
01394 CD7F FF 023F        STX    WIN
01395 CD82 B6 023F        LDA A  WIN      RECEIVE BUFFER FULL?
01396 CD85 B1 0235        CMP A  ENDIN
01397 CD88 22 0A          BHI    A9
01398 CD8A 26 43          BNE    A3
01399 CD8C B6 0240        LDA A  WIN+1
01400 CD8F B1 0236        CMP A  ENDIN+1
01401 CD92 23 3B          BLS    A3
01402 CD94 B6 0190 A9     LDA A  ERRORS   SET 'BUFFER FULL' ERROR.
01403 CD97 8A 04          ORA A  #%00000100
01404 CD99 B7 0190        STA A  ERRORS
01405 CD9C 7F 0220        CLR    RCVFLG   STOP ACCEPTING DATA.
01406 CD9F 3B             RTI
01407 CDA0 B6 5800 A1     LDA A  PIAPA0   GET POSSIBLE FRAME.  ATTEMPT TO
01408 CDA3 F6 5804        LDA B  PIAPA1   SYNCHRONIZE TO INPUT DATA STREAM
01409 CDA6 B1 C000        CMP A  TBLTXD   BY LOCKING ON AN IDLE CHARACTER.
01410 CDA9 26 0F          BNE    A2
01411 CDAB F1 C001        CMP B  TBLTXD+1
01412 CDAE 26 0A          BNE    A2
01413 CDB0 7C 021C        INC    LOCKUP   WHEN AN IDLE CHARACTER IS DETECTED
01414 CDB3 7F 0226        CLR    BITCNT   SET THE LOCKUP FLAG AND INITIALIZE
01415 CDB6 7F 021D        CLR    TIMOUT   THE FRAME BIT COUNTER AND CLEAR
01416 CDB9 3B             RTI             TIMEOUT COUNTER.
01417 CDBA B6 021D A2     LDA A  TIMOUT   INCREMENT TIMEOUT COUNTER.
01418 CDBD 8B 01          ADD A  #1
01419 CDBF B7 021D        STA A  TIMOUT
01420 CDC2 24 0B          BCC    A3       IF TIMEOUT OCCURS,
01421 CDC4 B6 0190        LDA A  ERRORS   SET 'NO SYNCHRONIZATION'
01422 CDC7 8A 01          ORA A  #%00000001   ERROR FLAG.
01423 CDC9 B7 0190        STA A  ERRORS
01424 CDCC 7C 021F        INC    TIMFLG   SET 'TIMEOUT' FLAG.
01425 CDCF 3B       A3    RTI
01426               ***********************************************************
01427               ********************    OUTPUT INTERRUPT    ********************
01428               ***********************************************************
01429 CDD0 B6 0222 NMI    LDA A  TXFLAG   TRANSMIT ENABLED?
01430 CDD3 27 37          BEQ    B1
01431 CDD5 B6 0241        LDA A  ROT      TRANSMISSION COMPLETE?
01432 CDD8 B1 0237        CMP A  ENDOT
01433 CDDB 22 1E          BHI    B2
01434 CDDD 26 08          BNE    B3
```

```
CDDF B6 0242        LDA A  ROT+1
CDE2 B1 0238        CMP A  ENDOT+1
CDE5 22 14          BHI    B2
CDE7 FE 0241 B3     LDX    ROT
CDEA A6 00          LDA A  0,X       OUTPUT NEXT FRAME.
CDEC B7 5802        STA A  PIAPB0
CDEF E6 01          LDA B  1,X
CDF1 F7 5806        STA B  PIAPB1
CDF4 08             INX              UPDATE READ POINTER.
CDF5 08             INX
CDF6 FF 0241        STX    ROT
CDF9 20 11          BRA    B1
CDFB 86 01   B2     LDA A  #1        SET 'TRANSMISSION COMPLETE' FLAG.
CDFD B7 0221        STA A  TXCOMP
CE00 B6 C000        LDA A  TBLTXD    OUTPUT IDLE CHARACTER.
CE03 B7 5802        STA A  PIAPB0
CE06 B6 C001        LDA A  TBLTXD+1
CE09 B7 5806        STA A  PIAPB1
CE0C B6 5802 B1     LDA A  PIAPB0    CLEAR INTERRUPT FLAG.
CE0F B6 5806        LDA A  PIAPB1
CE12 3B             RTI
                 ***************************************************************
                 *********************   SWI INTERRUPT   ************************
                 ***************************************************************
CE13 B6 0188 SWI    LDA A  STATUS
CE16 8A 40          ORA A  #%01000000
CE18 B7 0188        STA A  STATUS
CE1B 3B             RTI
                    END
```

SYMBOL TABLE

BUFDIA	0000	BUFSC1	0020	BUFSC2	00D4	STATUS	0188	ERRORS	0190	TEMP	0193	SCRTCH	0199	IBLTCR	019C	BUFSTR	0000
BUFSIE	001F	BUFC1B	0020	BUFC1E	00D3	BUFC2B	00D4	BUFC2E	0187	TXTBLB	019C	TXTBLE	021B	LOCKUP	021C	TIMOUT	021D
DATFLG	021E	TIMFLG	021F	RCVFLG	0220	TXCOMF	0221	TXFLAG	0222	SFOFLG	0223	EOB	0224	OFFSET	0225	BTICNT	0226
FRMCNT	0227	STACNT	0228	IDLCNT	0229	DEL1	022A	DEL2	022B	DEL3	022C	DATMSG	022D	STAMSG	0230	RNG	0231
EXCLOR	0234	ENDIN	0235	ENDOT	0237	ENDUP	0239	BTXPTR	023B	RIN	023D	WIN	023F	POT	0241	LIPPTR	0243
TBLTXD	C000	TX1END	C07F	TBLLKP	C100	LKPEND	C16F	TBLMSG	C170	STAT0	000C	STAT1	0039	IDLEQ	001F	IDLE1	00F9
PIAPA0	5800	PIACA0	5801	PIAPB0	5802	PIACB0	5803	PIAPA1	5804	PIACA1	5805	PIAPB1	5806	PIACB1	5807	PIAPA2	5808
PIACA2	5809	PIAPB2	580A	PIACB2	580B	SYSMON	580C	INIT	C400	INIT1	C454	LOOP1	C46C	LOOP2	C44F	CONT	C47A
TST1	C495	TST2	C49B	TST3	C4A3	TST4	C4A9	TST5	C4AF	TST6	C4B5	OPR1	C4BD	OPR2	C4C3	TSTLP1	C4C6
TLP11	C51A	TLP12	C52F	TLP14	C534	TLP13	C58F	TSTLP2	C5C9	TLP22	C5D7	TLP21	C5E4	TLP23	C632	TLP25	C647
TLP24	C65D	TLP26	C66F	TSTLP3	C67B	TLP36	C6C9	TLP31	C72F	TLP39	C741	TLP310	C747	TLP311	C754	TLP33	C75E
TLP32	C783	TLP34	C7AF	TLP35	C7BA	TLP315	C7C9	RNGA1	C7E3	RNGA2	C7F3	TLP312	C802	TLP316	C813	TLP314	C81A
TLP313	C81D	TLP38	C824	TSTLP4	C83B	TLP41	C896	TLP42	C8CC	TLP43	C8D4	TLP45	C8E4	TSTLP5	C8F9
TSTLP6	C96B	TLP561	C9DB	TLP562	C9E4	TLP564	CA01	TLP563	CA11	TLP565	CA23	CKSTA1	CA26	CKSTA8	CA2D	CKSTA7	CA34
CKSTA1	CA44	CKSTA6	CA4F	CKSTA3	CA6E	CKSTA2	CA78	CKSTA4	CA80	CKSTA5	CAA7	CKSTA7	CAB2	CKIDLE	CAB5	CKIDL7	CABC
CKIDL9	CAC3	CKIDL2	CAC6	CKID14	CAD4	CKIDL1	CAFB	CKIDL3	CB01	CKIDL4	CB07	CKIDL8	CB28	CKID10	CB31	CKIDL6	CB3[illegible]
CKID11	CB4C	CKIDL5	CB55	CKID13	CB5B	CKID12	CB61	CKDATA	CB74	CKDAT2	CB90	CKDAT8	CB96	CKDAT7	CB9C	CKDAT9	CB[illegible]
CKDAT3	CBC3	CKDAT1	CBCE	CKDAT4	CBF5	CKDAT5	CC08	CKDAT6	CC16	EXIT	CC1C	TLP5	CC28	TLP6	CC49	EXIT1	CC[illegible]
UPDATE	CC79	UPDAT2	CC96	UPDAT1	CC9A	MTYPE	CCA7	ML3	CCBC	ML2	CCCE	ML1	CCD5	OPER1	CCDA	DELAY	CCE0
DLYLP3	CCED	DLYLP2	CCEE	DLYLP1	CCEF	IRQ	CD0E	A10	CD1B	A7	CD25	A4	CD2C	A5	CD7F	A6	CD[illegible]
A8	CD70	A9	CD94	A1	CDA0	A2	CDBA	A3	CDCF	NMI	CDD0	B3	CDE7	B2	CDFB	B1	CE[illegible]
SWI	CE13																

APPENDIX E

EQUIPMENT INSTALLATION AND OPERATION

EQUIPMENT INSTALLATION.

Four installation cables are provided with the serial data reformatter equipment. All four cables are identical with connecters compatible with the 25-pin cinch connecters used by the Mode S and the modems. These cables are used to install the reformatter between the Mode S surveillance output ports and the modems.

Figure E1 shows the Mode S/terminal automated test facility (TATF) modem configuration prior to and after the installation of the serial data reformatter equipment. The procedure to install the equipment is as follows:

1. Remove the lower back panel on unit 14 of the Mode S sensor.
2. Refering to figure E1 disconnect cable 14W4P1 (14A2A1J1) at the TATF surveillance channel #1 modem.
3. Connect one end of an installation cable to cable 14W4P1.
4. Connect the remaining cable connecter to the reformatter's channel #1 Mode S plug.
5. Connect a second installation cable to the reformatter's channel #1 modem plug.
6. Connect the remaining cable connecter to plug J1 at the TATF surveillance channel #1 modem.
7. Repeat steps 1 through 6 for cable 14W5P1 (14A4A2J1) to install channel #2 of the reformatter.
8. Plug the power cable into the same AC power phase supplying the modems.

EQUIPMENT OPERATION.

After the serial data reformatter equipment is correctly installed set all the address switches and the address mode control switch to their down position to place the simulation and diagnostic module (SDM) address bus under microprocessor control. Then set the ON/OFF power switch to its ON (up) position and depress the system reset button. Both channel monitors should display a hexidecimal 10 indicating that the channels are not synchronized to the Mode S surveillance data stream and that the SDM monitor should be cleared. The equipmemt is now in a wait state. The reformatter is placed in this wait state when power is first applied to the equipment or when the system reset button is depressed.

Normal operating mode - To place the reformatter in the normal mode set address switch "0" to its up position. The remaining address switches should remain in their down position. The SDM monitor should respond with all LEDs turned on indicating that the instruction has been read. Once the monitor has indicated that the instruction has been read adddress switch "0" may be set to its down position. The instruction is executed when the display goes off. The reformatter is now in the normal operating mode. As soon as the instruction has been completed a two second pause will elapse before another instruction can be read. If address switch "0" remains up, the SDM monitor will continue to flash on and off every four seconds. The equipment, however, will remain in the normal mode.

The reformatter, also, may be placed in the normal operating mode by running any of the test programs. At the completion of any of these programs the reformatter is automatically placed in the normal mode of operation.

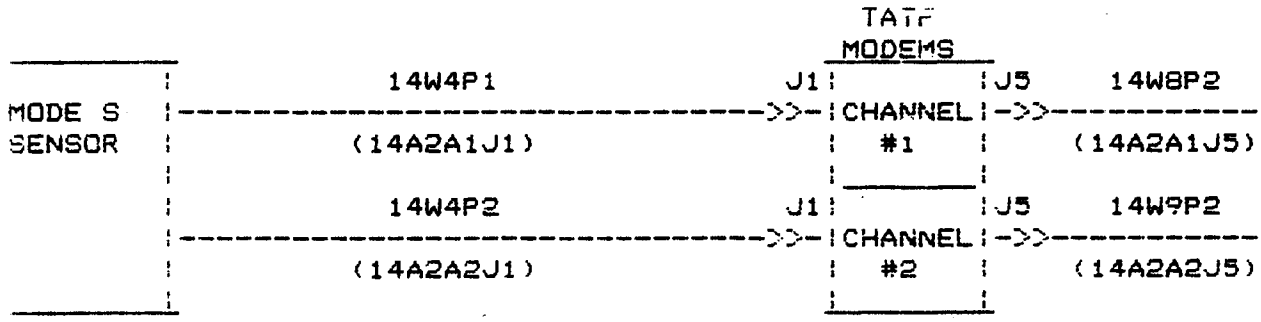

A. Normal Mode S/TATF MODEM Configuration

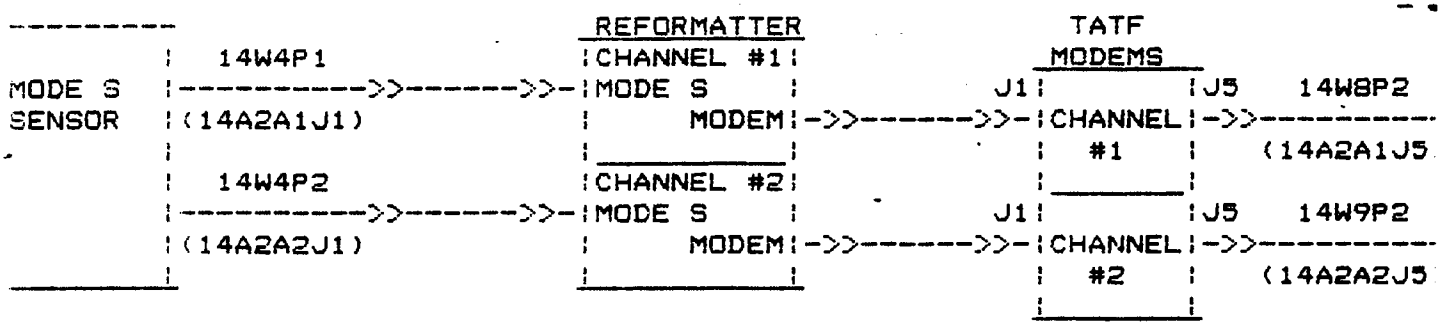

B. Mode S/ARTS IIIA Test Configuration

Figure E1. Serial Data Reformatter Equipment Installation

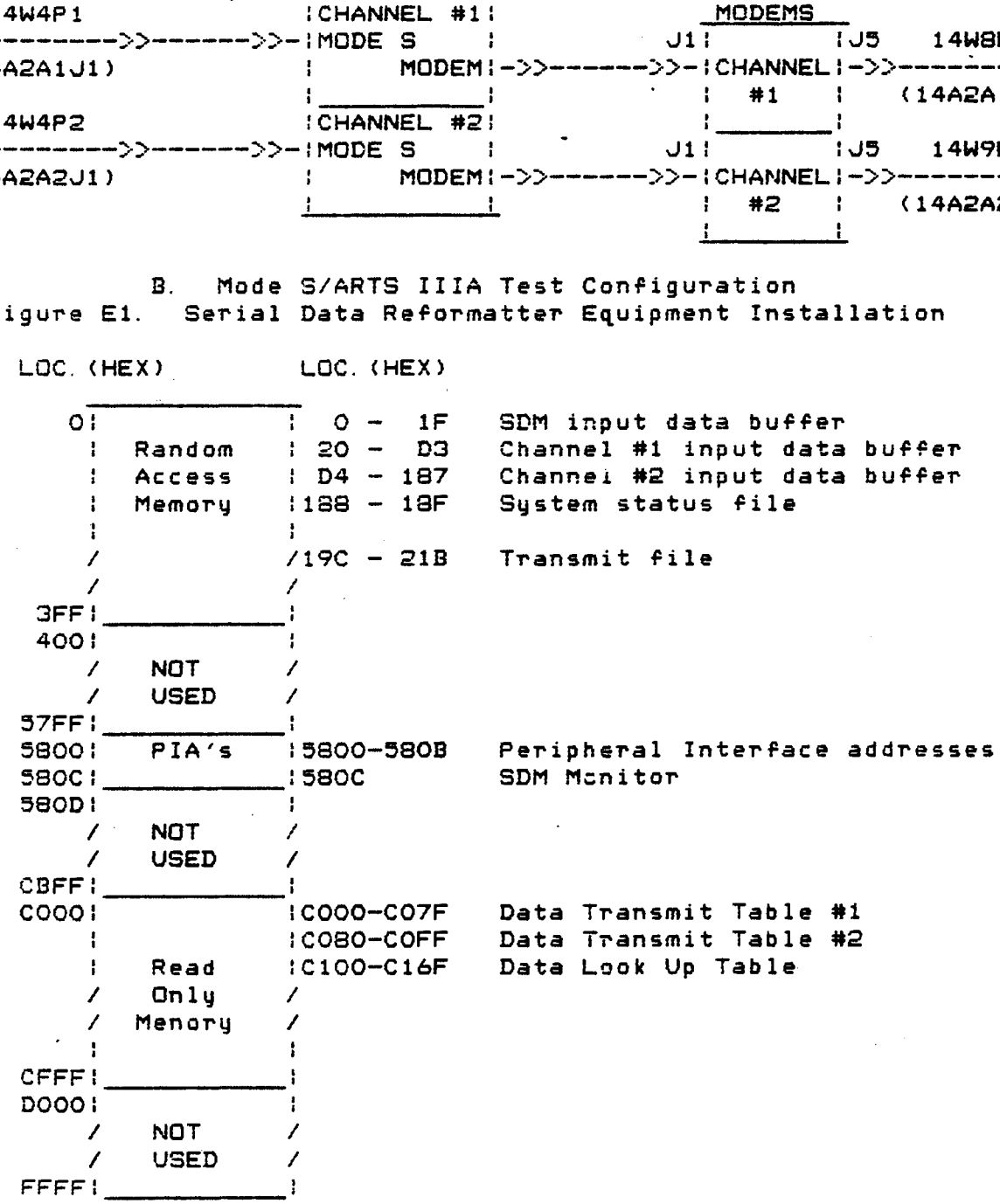

Figure E2. Overview of SDM Memory Map

Test mode - Before discussing the test mode of operation the functions of the SDM front panel switches and display monitor will be discribed.
Address Mode Control Switch - The address mode control switch determines whether the microprocessor or the operator has control over the SDM address bus. If this switch is in its down position the microprocessor has control over the address bus. If this switch is in its up position the operator has control over the address bus via the 16 SDM address switches.

SDM Address Switches - The SDM address switches serve two purposes depending on the position of the address mode control switch. If the address mode control switch is in its up position the SDM address switches are used to inspect the content of the SDM's memory. The data at the location selected is displayed on the SDM monitor. Figure E2 shows a brief overview of the SDM memory map. Refer to appendix D for further details on the test programs and data files.

If the address mode control switch is set to its down position the lower 8 address switches are used by the operator to pass instructions to the SDM software. The upper 8 address switches are not used. Table E1 presents the functions of the SDM address switches when the address mode control switch is in its down position. A detailed description of the lower 8 address switches is listed below:

Switch 0 - This switch initiates the reading and execution of an instruction defined by switches 1 through 7 when it is placed in its up position.

Switch 1 - This switch selects the mode of operation. If placed in the down position the normal mode is selected. In this mode switches 2 through 7 are not used. If placed in the up position the test mode is selected.

Switch 2 - If switch 1 is up, this switch selects the verification routine check test when in its up position. Switches 5, 6, and and 7 select the fault message for this routine. If switch 1 is down, this switch selects the by-pass mode of operation when in its up position.

Switch 3 - This switch selects the continuous message dissemination routine when it is in the up position. Switches 5, 6, and 7 selects the one message in data transmit table #1 to be transmitted.

Switch 4 - This switch selects the status dissemination check routine when it is in the up position. Switches 5, 6, and 7 select specific information for inspection while this routine is running. Refer to table E1 for more details on what information is displayed.

Switch 5 - This switch selects the SDM verification routine when placed in the up position. Swicthes 2, 3, and 4 must be in their down position.

Switch 6 - This switch selects the channel#1 verification routine when placed in the up position with switches 2, 3, and 4 remaining in the down position.

TABLE E1. DEFINITION OF SDM ADDRESS SWITCHES

ADDRESS SWITCH	DEFINITION OF INSTRUCTIONS				
0	1 = EXECUTE				
1	0 = Normal Mode	1 = Test Mode			
2	1 = By-Pass Mode	1 = Verification Routine Check			
		SWITCHES			FAULT
		7	6	5	MESSAGE SELECTED
		0	0	0	WEATHER MESSAGE
		0	0	1	CPME/BAD PARITY
		0	1	0	BCN STROBE/DIFF. TIS
		0	1	1	BCN#1/BAD PARITY
		1	0	0	SRCH#1/DIFF. AZIMUTH
		1	0	1	SYNCH/DIFF. TIS
		1	1	0	SRCH#2/BAD HEADER
		1	1	1	BCN#2/DIFF. RG & A CODE
3	CURRENTLY UNUSED	1 = Continuous Message Dissemination			
		SWITCHES			
		7	6	5	MESSAGE SELECTED
		0	0	0	ALL IDLES
		0	0	1	ATCRBS CPME
		0	1	0	BEACON STROBE
		0	1	1	REGULAR BEACON #1
		1	0	0	REGULAR SEARCH #1
		1	0	1	AZIMUTH SYNCH
		1	1	0	REGULAR SEARCH #2
		1	1	1	REGULAR BEACON #2
4	CURRENTLY UNUSED	1 = Status Dissemination Check			
		SWICTHES			
		7	6	5	BYTE DISPLAYED
		0	0	0	UPPER BYTE OF MESSAGE COUNTER
		0	0	1	MIDDLE BYTE OF MESSAGE COUNTER
		0	1	0	LOWER BYTE OF MESSAGE COUNTER
		0	1	1	UPPER BYTE OF STATUS COUNTER
		1	0	0	LOWER BYTE OF STATUS COUNTER
		1	0	1	UPPER BYTE OF SEQUENCE GEN.
		1	1	0	LOWER BYTE OF SEQUENCE GEN.
		1	1	1	EXCLUSIVE OR GATE OUTPUT
5	CURRENTLY UNUSED	1 = SDM Verification Routine			
6	CURRENTLY UNUSED	1 = Channel #1 Verification Routine			
7	CURRENTLY UNUSED	1 = Channel #2 Verification Routine			

Switch 7 - This switch selects the channel#2 verification routine when placed in the up position with switches 2, 3, and 4 remianing in the down position. Note that the serial data reformatter equipment may be completely cerified by setting switches 5, 6, and 7 to their up position with switches 2, 3, and 4 remaining in their down position. The three routines will be executed in sequential order. At the completion of all three routines the over all status of the equipment is displayed.

SDM Monitor - The SDM monitor consists of 8 LEDs which provide means to inspect the status of test programs while running or to step through programs and data files resident in memory depending on the position of the address mode control switch. If the address mode control switch is in its down position the SDM monitor provides an account of the equipment on line. While a test program is running the LED corresponding to the switch selecting the program will be on, i.e., if switch 5 is in its up position selecting the SDM verification rouitne, the LED labled "D5" will be on. In addition, the LED "D1" will be on indicating that the SDM is in the test mode.

The following procedures are used to certify the serial data reformatter equipment prior to conducting a test. This is accomplished by running the three verification routines.

First preset all the SDM address switches to their down position to prevent accidentally selecting an incorrect test mode. Then set switches 5, 6, and 7 to their up position to select the SVR, CVR-1 and CVR-2 tests, respectively. Now set switch 1 to its up position to select the test mode. Toggle switch "O" to the up position momentarily. The SDM monitor should immediately indicate that the instruction has been read. After a two second pause the three routines will be executed in secceeding order as shown on the monitor. The status of the Reformatter will be displayed on the SDM monitor at the completion of all three verification routines. All indicators of the monitor will be off if the reformatter passes all three routines. The monitor will display the first byte of the system status file if any of the routines fail.

The system status file is presented in table E2. This file contains eight bytes labled Status+0 through Status+7 as shown. The location and general purpose of each byte is given along with a brief description of the flags contained in each byte. The first byte labled Status+0 contains the general status of the reformatter and specifies which verification routine failed. Status+1 contains the status of the SDM. The next three bytes consists of specific condition flags on channel #1 and the final three bytes consists of specific condition flags on channel #2. If a problem is detected the file may be inspected by setting the address mode control switch to its up position and selecting the appropriate address via the SDM switches. The error information will be displayed on the SDM monitor.

TABLE E2. SYSTEM STSTUS FILE

STATUS+0 (188 Hex.) "CURRENT CARD STATUS"

D7	-	PROBLEM IN SURVEILLANCE REFORMATTER CHANNEL #2!
D6	-	PROBLEM IN SURVEILLANCE REFORMATTER CHANNEL #1!
D5	-	PROBLEM IN DIAGNOSTIC/SIMULATION CARD!
D4	-	NOT USED
D3	-	"
D2	-	"
D1	-	"
D0	-	SOFTWARE ERROR INTERRUPT! (SWI)

STATUS+1 (189 Hex.) "DIAGNOSTIC/SIMULATION CARD"

D7	-	NOT USED
D6	-	"
D5	-	"
D4	-	"
D3	-	INCORRECT DATA RECEIVED!
D2	-	INPUT BUFFER OVERFLOW!
D1	-	IDLE CHARACTER LOCKUP ONLY!
D0	-	IDLE CHARACTER LOCKUP DID NOT OCCUR!

STATUS+2 (18A) {STATUS+5} {18D} "CHANNEL #1" {"CHANNEL #2"}

D7	-	PANIC FLAG!
D6	-	EXTRA IDLE CHARACTERS!
D5	-	MISSING IDLE CHARACTERS!
D4	-	IDLE CHARACTER INCORRECT!
D3	-	TEST TERMINATED BEFORE COMPLETION!
D2	-	INPUT BUFFER OVERFLOW!
D1	-	IDLE CHARACTER LOCKUP ONLY!
D0	-	IDLE CHARACTER LOCKUP DID NOT OCCUR!

STATUS+3 (18B) {STATUS+6} {18E} "MISSING MESSAGES"

D7	-	STATUS MESSAGE (INDICATOR FLAG ONLY)
D6	-	BEACON MESSAGE #2
D5	-	SEARCH MESSAGE #2
D4	-	SEARCH RTQC MESSAGE
D3	-	SEARCH MESSAGE #1
D2	-	BEACON MESSAGE #1
D1	-	BEACON RTQC MESSAGE
D0	-	ATCRBS CPME REGULAR BEACON MESSAGE

STATUS+4 (18C) {STATUS+7} {18F} "INCORRECT MESSAGES"

D7	-	STATUS MESSAGE
D6	-	BEACON MESSAGE #2
D5	-	SEARCH MESSAGE #2
D4	-	SEARCH RTQC MESSAGE
D3	-	SEARCH MESSAGE #1
D2	-	BEACON MESSAGE #1
D1	-	BEACON RTQC MESSAGE
D0	-	ATCRBS CPME REGULAR BEACON MESSAGE