CT- 82-100-122LR

COPY 1

FEDERAL AVIATION ADMINISTRATION

MAY 23 1984

TECHNICAL CENTER LIBRARY
ATLANTIC CITY, N.J. 08405

FAA TECHNICAL CENTER LETTER REPORT

TEST PLAN

EVALUATION OF THE EFFECTS OF

POWERLINE CARRIER (PLC)

INTERFERENCE ON

AIRBORNE LORAN-C RECEIVER PERFORMANCE

by

Robert Moore

January 1983

U. S. DEPARTMENT OF TRANSPORTATION
FEDERAL AVIATION ADMINISTRATION
TECHNICAL CENTER
Atlantic City Airport, N.J. 08405

TABLE OF CONTENTS

	PAGE
1 OBJECTIVES	1
2 BACKGROUND	1
3 RELATED DOCUMENTATION	2
4. DATA COLLECTION	2
4.1 GENERAL	2
4.2 LABORATORY TESTS	4
4.3 FIELD TESTS	8
4.4 GROUND TESTS	8
4.5 FLIGHT TESTS	11
5.0 DATA COLLECTION AND ANALYSIS	15
6.0 RESOURCE MANAGEMENT	15
7.0 SCHEDULE OF ACCOMPLISHMENT	15

LIST OF FIGURES

FIGURE		PAGE
1.	LABORATORY TEST CONFIGURATION	5
2.	LABORATORY DATA COLLECTION FORM	7
3.	GROUND TEST SITE	9
4.	GROUND TEST EQUIPMENT CONFIGURATION	10
5.	FLIGHT TEST EQUIPMENT CONFIGURATION	11
6.	FLIGHT TEST SITE	12

LIST OF TABLES

TABLE No.		PAGE
1	LABORATORY PLC TEST FREQUENCIES	4
2	LORAN-C RECEIVER PARAMETERS	6
3	GROUND TESTS	8
4	FLIGHT TESTS	13
5	DESCRIPTION AND PURPOSE OF FLIGHT PATTERNS	14

1. OBJECTIVES

As part of an overall effort to determine the operational capabilities of LORAN-C navigation in the civil aviation environment, this test plan specifically addresses Power Line carrier (PLC) interference and its effect on LORAN-C avionics performance.

The tests outlined in this plan are designed to:

a. Characterize the interference zone which exists in the vicinity of a typical commercial power line when energized with PLC signals.

b. Determine the effects of this interference on the performance of typical LORAN-C avionics systems.

c. Develop simulation techniques to characterize PLC interference.

The results obtained from ground and airborne tests, correlated with simulation will generate an understanding of the effect of PLC radiation on LORAN-C avionics performance. It is anticipated that basic guidelines will evolve from these tests for airborne LORAN-C navigation and PLC operations.

2. BACKGROUND

Powerline Carrier (PLC) systems are used by electric power utilities for communications, fault protective switching, and general management of power generation and distribution. PLC signals are impressed across two phases of a 3 phase powerline or between any phase and ground at a frequency ranging between 30 KHz and 300 KHz. Transmitted power levels usually range from 1 to 10 watts. Occasionally applications as high as 100 watts are used by some utilities. Modulation methods include amplitude modulation (AM), frequency modulation (FM), single side band (SSB), frequency shift keying (FSK), phase shift keying (PSK) and continuous wave (CW). The process of using power transmission lines as a primary propagation medium creates a field of electromagnetic radiation in the vicinity of the lines. The extent of this field is contingent on a number of factors, including power line configuration, PLC carrier level, and the physical characteristics of the area that the power line is traversing.

LORAN-C is a low frequency radionavigation system transmitting time synchronized pulse groups at 100 KHz in an assigned frequency band of 90 KHz to 110 KHz. LORAN-C was developed for the Department of Defense for military martime use, with subsequent acceptance for civil shipboard operations. Advancements in component and software technology later

resulted in the development of LORAN-C navigation sets suitable for airborne use. Current airborne LORAN-C navigation uses include rotary and fixed wing operations in remote and offshore areas where conventional nav-aid coverage is marginal or not available. LORAN-C is an RNAV system, providing position information and constant course sensitivity for a desired flight leg. This capability and compatibility with the Federal Airways structure have given impetus to the development of low cost LORAN-C avionics with a resultant increase of LORAN-C operations within the domestic airspace.

During the overall investigation of LORAN-C as a potential airborne navigation system, a number of problems and limitations have surfaced. One area of concern is the extent of interference caused by PLC radiation from power transmission lines. The Transportation Systems Center conducted ground level PLC radiation interference tests near and under selected transmission lines. PLC interference was transmitted at or near 95 KHz. The data obtained provided a significant but limited characterization of PLC radiation and the extent of interference to marine LORAN-C receivers in a ground vehicle. This test plan is designed to probe the PLC radiation environment which exists above a typical power transmission line and to determine it's effect on airborne LORAN-C performance.

3. RELATED DOCUMENTATION

1. Report No. DOT-TSC-FAA-80-8 "Interference and Noise in and Adjacent to the LORAN-C Spectrum At Airports", Final, May 1980.

2. Report No. DOT-TSC-RSPA-79-8, "The Effects of Primary Power Transmission Lines on the Performance of LORAN-C Receivers in Experimental Terrestrial Applications", Final, July 1979.

3. Report No. CT-82-100-75LR, "Aircraft Tracking and Data System (ATADS) Enroute Accuracy.

4. Draft Test Plan "Evaluation of the Effects of Power Line Carrier (PLC) Interference on Airborne LORAN-C Receivers", TSC, March 1982.

4. DATA COLLECTION

4.1 GENERAL

This test program is investigative in nature. The data collected will not be sufficient for statistical analysis of the overall PLC interference problem. However,adequate information will be collected to generate a base for general characterization of the effects of PLC interference on LORAN-C avionics. A field test site, consisting of several miles of straight path transmission lines and an intersecting road, has been selected in the vicinity of the FAA Technical Center. Data collection will be accomplished with an instrumented van and a test bed aircraft. The PLC environment on the test transmission line will be controlled. The data collected will also be used to support efforts to develop generalized PLC simulation models. Simulation validity will be confirmed by direct comparison with field test results. Validated simulation models can be useful as an aid in the development of appropriate low-frequency (LF) management procedures through simulation of environments where LORAN-C operations are critical.

The parameters that must be measured are:

a. Received LORAN-C signal characteristics.
b. LORAN-C Navigation Performance
c. PLC radiation characteristics

The signal to noise ratio (SNR) and master/secondary time differences of the best geometry triad of the northeast U.S. chain (group repetition interval (GRI) 9960) will be measured in the laboratory at the Technical Center. The measured values will be replicated on a Loran-C simulator in the laboratory along with simulated PLC.

All received SNR's and time differences will be measured at the PLC test site (ground and airborne tests) with and without PLC radiation present.

Loran-C receivers determine position by measuring the time differences between the master and at least two secondary stations in the chain. TD measurements are made by reference to the receiver°s internal clock between time synchronization points in the received pulse groups. The synchronization point for a pulse group is referenced to the first pulse in the group and is determined by averaging the measurements made on the eight pulses in the group, using the zero crossing of the third 100 KHz carrier cycle in each pulse as measurement reference. The third cycle is identified by the expected slope of the pulse envelope at the occurrence of the third cycle.

An interference signal can shift the phase of the LORAN-C signal, causing the third cycle zero crossing to be delayed or advanced resulting in a position error. It also can distort the LORAN-C pulse envelope, changing the envelope to cycle discrepancy (ECD) which would reduce the receiver°s ability to identify the third cycle and possibly result in a loss of lock. The ability of a LORAN-C receiver to maintain lock is also dependent on signal to noise ratio. A low SNR caused by high level interference can cause a receiver to lose lock. The actual value a receiver loses lock is dependent on receiver design. The same conditions which cause a receiver to lose lock (high ECD or low SNR) will prevent the receiver from reacquiring the LORAN-C signal. If these conditions persist (flight path parallel to the power line) long enough, even the more sophisticated LORAN-C receivers would require a "cold" reacquisition. Typical reacquisition time ranges from thirty seconds to two minutes. This could be critical in the approach environment.

The essential characteristics of PLC radiation are:

a. PLC frequency
b. PLC field strength
c. PLC radiation spectral content

PLC carrier frequencies are normally in the range 30 KHz to 300 KHz. This test series will be restricted to simulated and actual carrier frequencies in the LORAN-C (90 KHz to 110 KHz) band.

PLC carrier levels will be expressed in relative terms, referenced to the peak levels of simulated and received LORAN-C pulse groups. Simulated PLC carriers will be the only contaminating signals mixed with LORAN-C pulse groups during laboratory tests and will be the prime factor in SNR determination.

The area selected for ground and flight tests has relatively few telephone and power lines within proximity; re-radiation of PLC test signals from these sources is expected to be minimal.

All PLC test signals coupled to power lines or simulated in laboratory testing will be unmodulated carriers. Spectral content will be a constant during all tests.

4.2 LABORATORY TESTS

Various PLC environments will be simulated in the laboratory. The purpose of the simulations is to determine the relationship between various levels of PLC interference and the performance of three representative LORAN-C receivers. The results of laboratory simulations will then be verified through ground and airborne tests. Laboratory tests will consist of combining simulated LORAN-C and PLC carrier signals and coupling them to the LORAN-C receiver being tested (Figure 1).

An EPSCO Model 4010-50 LORAN-C simulator will be used to generate the master and two geometrically appropriate secondaries of the U.S. Northeast Chain. The time differences and relative amplitudes of the simulated pulse groups will be adjusted to emulate actual Loran-C signals received.

A Rockland Model 5100 programmable frequency synthesizer will be used to generate six near synchronous and six non-synchronous PLC unmodulated carriers. PLC carrier amplitude will be variable. Carrier frequencies (Table 1) will be within the Loran-C spectral frequency band.

TABLE 1 PLC TEST FREQUENCIES (Hz)

NEAR-SYNCHRONOUS	NON-SYNCHRONOUS
85,000.05	85,002.5
90,000.05	90,002.5
95,000.05	95,002.5
100,000.05	100,002.5
105,000.05	105,002.5
110,000.05	110,002.5

The overall test process consists of applying composite simulated Loran-C/PLC carrier signals to the antenna input or antenna coupler of Loran-C receivers under test. The Loran-C portion of the signal will be a fixed level, and the PLC portion will be variable level referenced to the Loran-C pulse group amplitude.

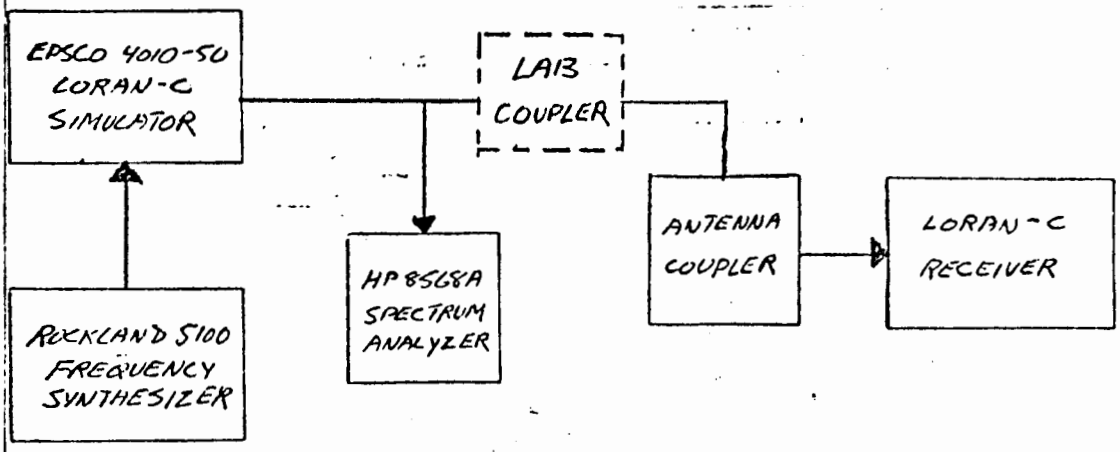

TEST LORAN-C RECEIVERS

1 - TELEDYNE TDL-424

2 - TELEDYNE TDL-711

3 - ADVANCED NAVIGATION INC. ANI-7000

FIGURE 1. LABORATORY TEST CONFIGURATION

The laboratory simulation procedures comprise the following general steps:

1. Set Loran-C simulator amplitudes and time differences to represent a desired geographic location and recorded receiver parameters (table 2).

2. Select a PLC frequency (Table 1); set for maximum attenuation.

3. Apply the composite Loran-C/PLC signal to the Loran-C receiver.

4. Allow sufficient time for the receiver to lock on and indicate normal operation.

5. Record parameters per figure 2 applicable for the receiver under test (Table 2).

TABLE 2

PARAMETER	LORAN-C RECEIVERS		
	TDL-424	TDL-711	ANI-7000
SNR	x	x	- *
ECD	-	x	x
TDX	x	x	x
TDY	x	x	x
LAT	x	x	x
LON	x	x	x
STATUS	x	-	x

*Signal Strength

6. Decrease PLC signal attenuation until amplitude is equal that of the lowest level Loran-C pulse group (Spectrum Analyzer.or oscilloscope)

7. Allowing settling time, record changes in parameters, if any.

8. Increase PLC signal level in discrete steps. Record parameters vs relative db at each setting after allowing receiver to settle.

9. Repeat this process for all three test receivers (Table 2)

RECEIVER MODEL_____ DATE_____

LORAN-C SIMULATOR CONFIGURATION

TDX_____us
TDY_____us

PLC FREQUENCY_____HZ

REFERENCE TDx_____MEASUREMENT (Zero Interference)
TDy_____

PLC (DB)	SNR	ECD	TDX	ΔTDX	TDY	ΔTDY	LAT	LON	STATUS	COMMENTS
0										
1										
2										
3										
4										
5										
6										
7										
8										
9										
10										
-										
-										
-										
-										
-										
30										

FIGURE 2 LABORATORY DATA COLLECTION FORM

4.3 FIELD TESTS

With the cooperation of the Atlantic City Electric Company, dedicated ground and airborne tests will be conducted at a site located 18 statute miles southwest of the Technical Center (Figure 3). Various levels of PLC carrier frequencies will be coupled to a designated powerline and appropriate radiation interference measurements will be made in the vicinity. Testing will be accomplished in two phases using an instrumented FAA test van and aircraft. Only two PLC carrier frequencies will be used for field testing, one near-synchronous (95000.05 Hz) and one non-synchronous (95002.5 Hz) The tests will be conducted with the line open circuited and denergized in order to eliminate the need for powerline trap re-tuning and to reduce powerline out of service time. Additional "unstaged" flight probes may be made over power lines in the vicinity which are operating with PLC frequencies within the Loran-C band.

4.4 GROUND TESTS

The purposes of the ground test are:

- To provide reference data for verification of the results of laboratory simulations.
- To confirm that the field test site and PLC environment generated are suitable for flight testing.

A test van (Figure 4) instrumented with Loran-C receivers and support equipment, will be positioned on the intersecting road approximately two miles from the powerline. When all receivers have acquired and locked on to Loran-C signals, display data and signal levels (spectrum analyzer) will be recorded. The van will then proceed along the road stopping at half mile intervals to repeat all measurements. This procedure will be followed to a point 2 miles beyond the power line intersection. The van will then turn around, and after reacquisition and lock on, repeat the process in the opposite direction. The two mile initial and half mile data points are arbitrary numbers subject to any changes dictated by the results of initial testing.

Five tests will be conducted using the following general procedure:

1. Point #1 - Record relative PLC carrier level with reference to Loran-C display data, reference table 2, with receivers locked on.
2. Proceed to next measurement point and record new measurements.
3. Continue this process until reaching the turn around point two miles beyond the powerline intersection. Receiver unlock points will be noted as distance to the line intersection.
4. Reverse direction, reacquire Loran-C and repeat process in the opposite direction

TABLE 3 PROPOSED GROUND TESTS

Test	PLC Freq.	PLC Level	Comments
1	No PLC	-	Initial look at Loran-C environment including powerline shielding effects.
2	95000.05 Hz	1 watt CW	Near-synchronous
3	95000.05 Hz	10 watts CW	Near-synchronous
4	95002.5 Hz	10 watts CW	Non-synchronous
5	95002.5 Hz	1 watt CW	Non-synchronous

Line Section	Sub Section	Location	Conductor	Ground Wire	Standard Type Existing	Standard Type Ultimate
Corson-Sherman Ave.	A	Corson Sub To Sherman Ave. Sub	397.5 MCM 30/7 A.C.S.R.	159 MCM 19/1 A.C.S.R.	H-Frame	H-Frame

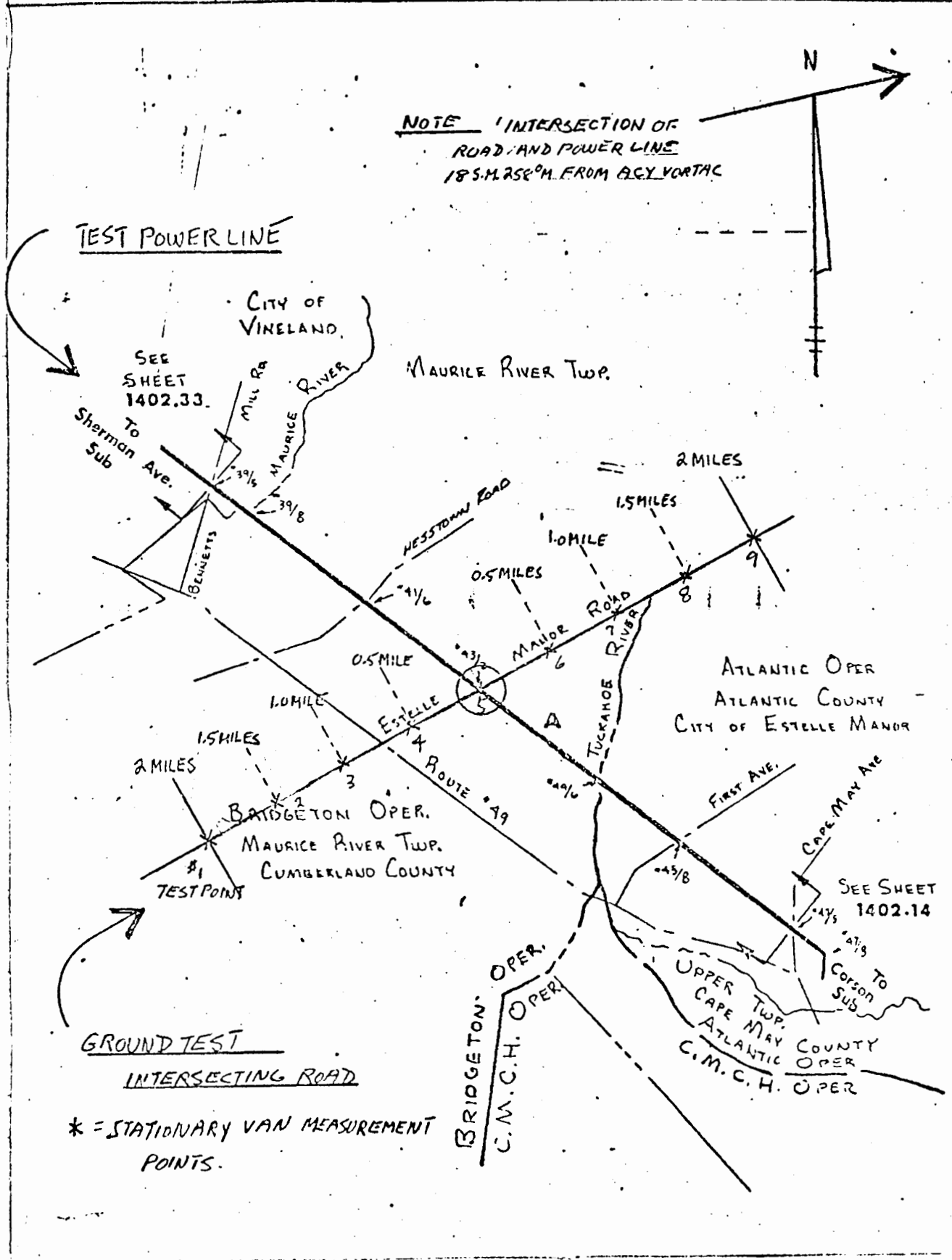

FIGURE 3. FIELD TEST SITE

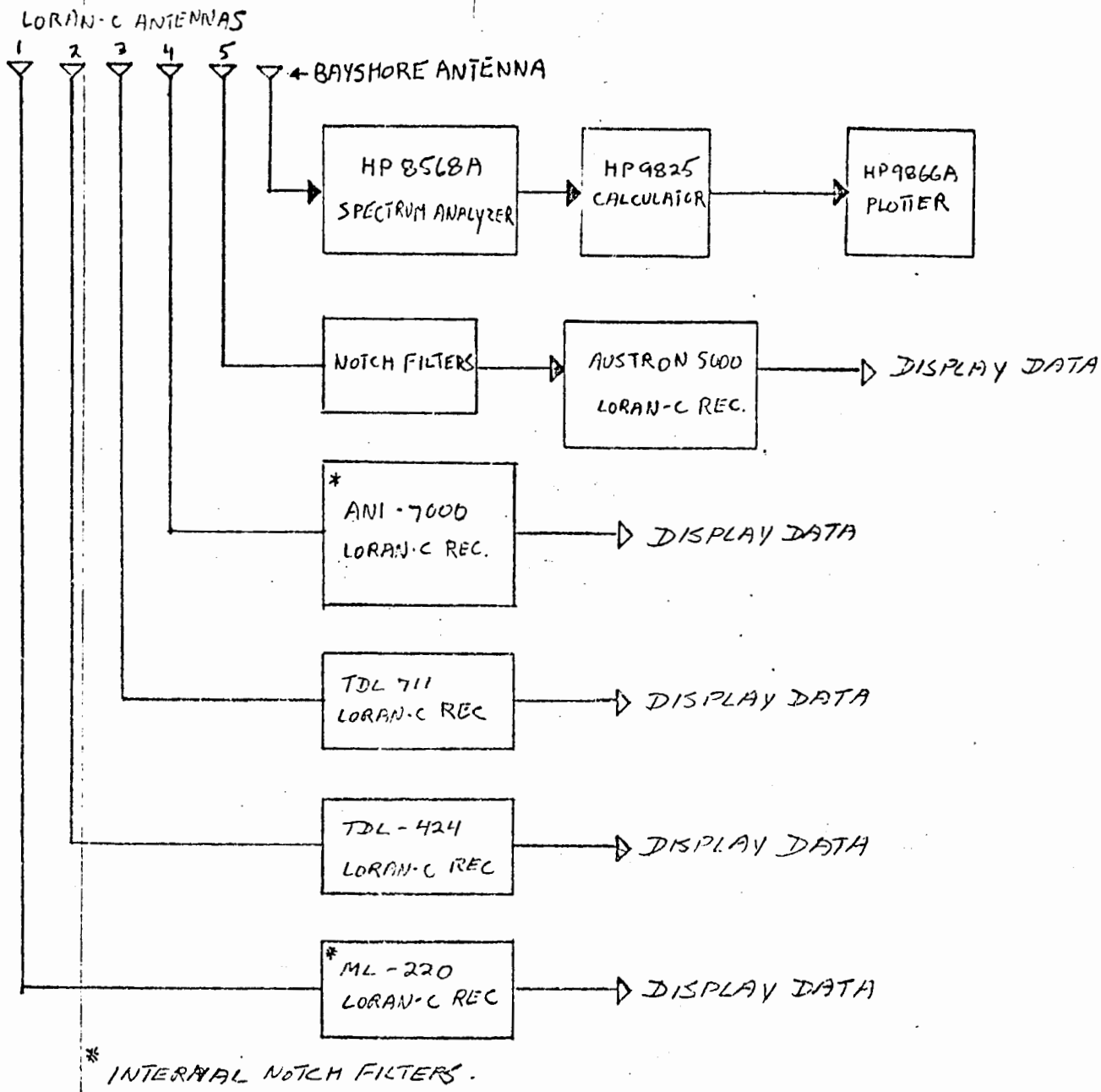

FIGURE 4. GROUND TEST EQUIPMENT CONFIGURATION

4.5 FLIGHT TESTS

The purpose of the flight tests are:

1. To provide additional reference data for verification of the results of laboratory simulations.

2. To characterize the lateral and vertical PLC radiation pattern which exists above a power line.

3. To determine to what extent PLC interference affects the performance of representative Loran-C av'onics on board aircraft in the vicinity of a power line.

A test aircraft, N-49 (CV-580) (Figure 5) instrumented with two Loran-C receivers, a spectrum analyzer, and data collection system (ATADS) will fly a total of thirty flight legs at three altitudes above the field site (Figure 6), along the power line and along the intersecting road. The proposed flights (Tables 4,5)will be flown in the same varied PLC conditions as in ground testing.

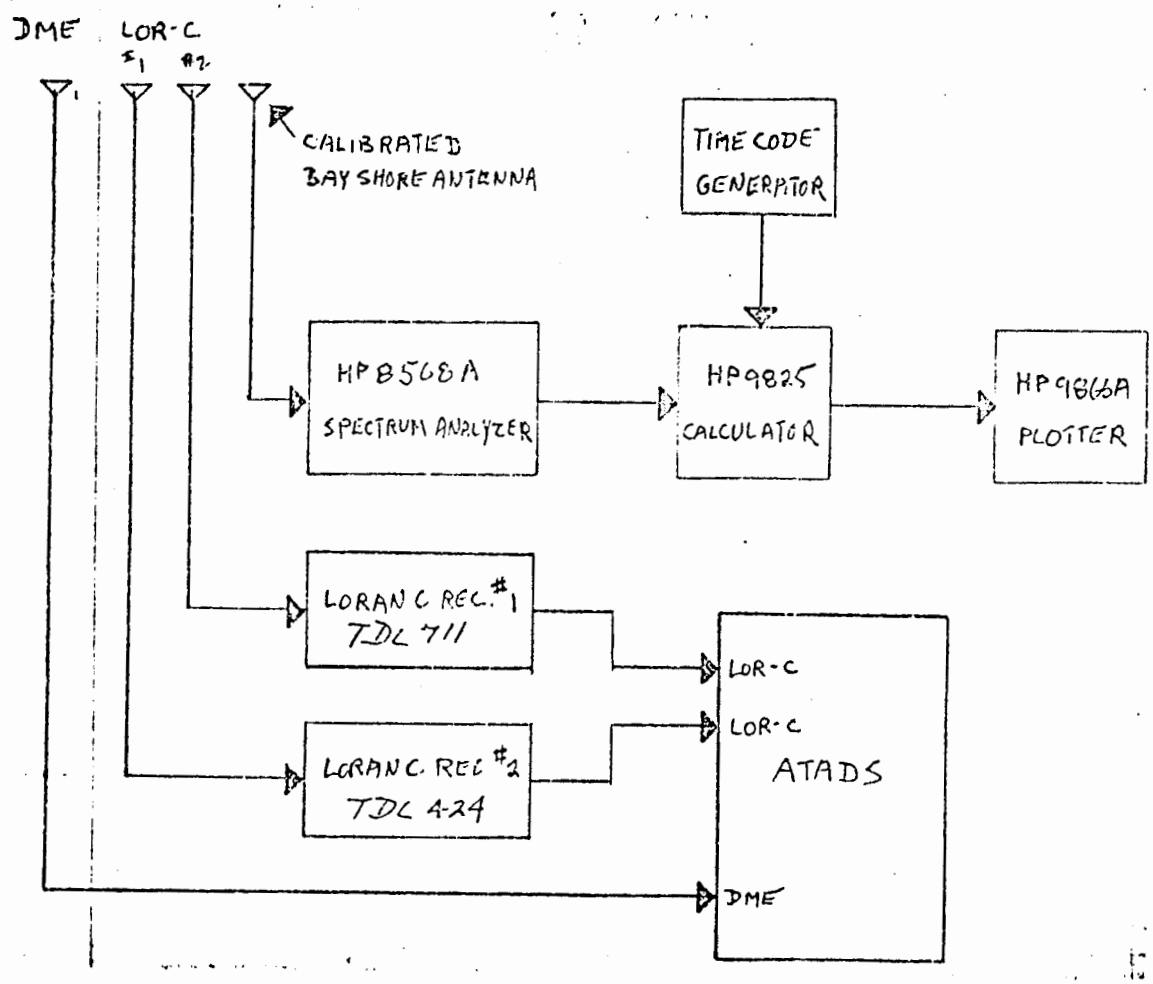

FIGURE 5 FLIGHT TEST EQUIPMENT CONFIGURATION

Airborne instrumentation will differ from the ground test equipment by using a calibrated antenna for measuring absolute values of signal strength with the spectrum analyzer. Also, Loran-C parameters, reference table 2,and positioning data will be recorded automatically with the "Aircraft Tracking and Data System" (ATADS) (related documentation, Item 3). ATADS provides multiple data recording channels for simultaneous storage of Loran-C measurements.

Time and position reference data are also recorded for correlation of measurements. ATADS resolves information from up to ten distance measurement equipment (DME) ground stations to compute the position of the aircraft. The DME measurements are made using commissioned DME ground stations, portable DME ground stations, or a combination of both.

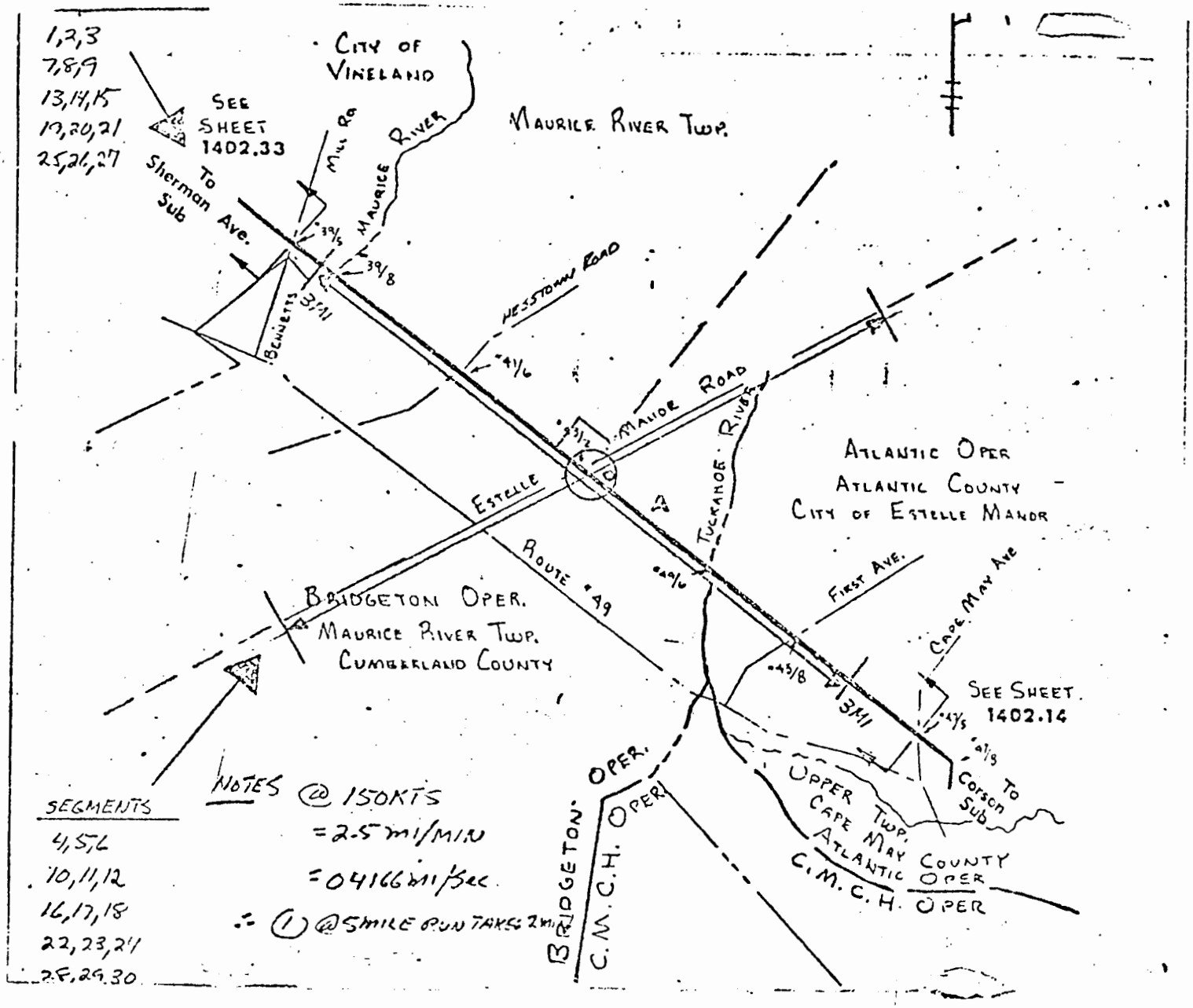

FIGURE 6 FLIGHT TEST SITE

TABLE 4 PLANNED FLIGHT TESTS

Series #	Segment(Run)#	PLC Power	PLC Frequency	Altitude	Remarks
1	1	No PLC	-	700'ASL	SE Above Line
	2	No PLC	-	1500'ASL	NW Above Line
	3	No PLC	-	3000'ASL	SE Above Line
	4	No PLC	-	3000'ASL	SW Above X Road
	5	No PLC	-	1500'ASL	NE Above X Road
	6	No PLC	-	700'ASL	SW Above X Road
2	7	1 Watt CW	95.0025 KHz	700'ASL	SE Above Line
	8	1 Watt CW	95.0025 KHz	1500'ASL	NW Above Line
	9	1 Watt CW	95.0025 KHz	3000'ASL	SE Above Line
	10	1 Watt CW	95.0025 KHz	3000'ASL	SW Above X Road
	11	1 Watt CW	95.0025 KHz	1500'ASL	NE Above X Road
	12	1 Watt CW	95.0025 KHz	700' ASL	SW Above X Road
3	13	10 Watts CW	95.0025 KHz	700'ASL	SE Above Line
	14	10 Watts CW	95.0025 KHz	1500'ASL	NW Above Line
	15	10 Watts CW	95.0025 KHz	3000'ASL	SE Above Line
	16	10 Watts CW	95.0025 KHz	3000'ASL	SW Above X Road
	17	10 Watts CW	95.0025 KHz	1500'ASL	NE Above X Road
	18	10 Watts CW	95.0025 KHz	700' ASL	SW Above X Road
4	19	10 Watts CW	95.0005 KHz	700' ASL	NW Above Line
	20	10 Watts CW	95.0005 KHz	1500'ASL	NW Above Line
	21	10 Watts CW	95.0005 KHz	3000'ASL	SE Above Line
	22	10 Watts CW	95.0005 KHz	3000'ASL	SW Above X Road
	23	10 Watts CW	95.0005 KHz	1500'ASL	NE Above X Road
	24	10 Watts CW	95.0005 KHz	700'ASL	SW Above X Road
5	25	1 Watt CW	95.0005 KHz	700'ASL	SE AZbove Line
	26	1 Watt CW	95.0005 KHz	1500'ASL	NW Above Line
	27	1 Watt CW	95.0005 KHz	3000'ASL	SE Above Line
	28	1 Watt CW	95.0005 KHz	3000'ASL	SW Above X Road
	29	1 Watt CW	95.0005 KHz	1500'ASL	NE Above X Road
	30	1 Watt CW	95.0005 KHz	700'ASL	SW Above X Road

TABLE 5 DESCRIPTION AND PURPOSE OF FLIGHT PATTERNS

Flight Segments	
1,2,3 7,8,9 13,14,15 19,20,21 25,26,27	Southeast and Northwest legs directly above the power line at test altitudes with two PLC frequencies and three PLC power levels on the transmission lines. The intent is to measure the effects of sustained PLC radiation and to demonstrate the presence of a standing wave.
4,5,6 10,11,12 16,17,18 22,23,24 28,29,30	Northeast and Southwest legs above the intersecting road previously used for ground measurements. The same altitudes and PLC configurations will be employed when flying above the power line. The intent is to measure PLC field intensity in relation to vertical and lateral distance from line and to verify radiation symmetry.

5.0 DATA ANALYSIS

5.1 LABORATORY TESTS

The results of laboratory simulations will establish the relationship of varied PLC environments and representative Loran-C receiver performance parameters (TD error, cycle slip, loss of lock, ECD, and SNR). The data will be presented as plots of parameters versus PLC level of interference for each test frequency and receivers tested.

5.2 FIELD TESTS

The results of ground and flight tests will determine the relationship of lateral and vertical distance from a power line with PLC field intensity. The relationship of radiated PLC signals with Loran-C reciever performance will be determined and used to verify the results of laboratory simulations. Data will be presented as plots of parameters versus lateral and vertical distance from the powerline. PLC field intensity will be plotted versus lateral distance from the powerline for various altitudes.

6.0 RESOURCE MANAGEMENT

ACT-140 will be responsible for the management of all phases of project activity at the Technical Center and for issuing a letter report.

ACT-100 will provide the test equipment and technical personnel necessary for conducting all tests and data collection, reduction and analysis.

ACT-600 will provide test aircraft and flight personnel. All flight test schedules must be approved by ACT-600.

APM-420 will be responsible for subprogram management and project funding.

Atlantic City Electric Co. will approve and schedule power line test operations. Atlantic City Electric will also provide test engineering support as required.

7.0 SCHEDULE OF ACCOMPLISHMENT

Test Plan Complete	1/83
Complete Laboratory Tests	2/83
Complete Ground Tests	1/83
Complete Flight Tests	2/83
Complete Letter Report	7/83