CT 82-100-1364P

FAA WJH Technical Center
00092656

[redacted]

MAR 22 Rec'd

TECHNICAL CENTER LIBRARY
ATLANTIC CITY, N.J. 08405

FAA TECHNICAL CENTER LETTER REPORT

SOFTWARE DOCUMENTATION:
PARAMETER CALCULATIONS
FOR
ILS GLIDE SLOPE
ANTENNA SYSTEMS

by Bruce L. Perry

U. S. DEPARTMENT OF TRANSPORTATION
FEDERAL AVIATION ADMINISTRATION
TECHNICAL CENTER
Atlantic City Airport, N.J. 08405

ABSTRACT

This report documents the FORTRAN program ANTHTS1. The program will accept input values for the ILS glide slope null reference, sideband reference, or capture effect antenna systems. The program then uses these values to calculate other unknown factors about the system. The author of this report is Bruce L. Perry. For further information about this report contact Edmund Zyzys, FAA Technical Center, Atlantic City Airport, NJ 08405, (609) 641-8200, ext. 3816.

Key Words

Glide Slope
Antenna Heights
Antenna Offset
A-Ratio

Project No.

071-313-840

TABLE OF CONTENTS

	Page
ABSTRACT	i
INTRODUCTION	1
PURPOSE	1
BACKGROUND	1
DISCUSSION	1
REFERENCES	4
APPENDIX	
A - "ANTHTS1"	
B - "ANTHTS1" Sample Runs	
C - "ANTHTS1" Program Listing	

PURPOSE

The purpose of this program is to aid project personnel involved in math modeling studies of glide slope sites, by condensing several operations into one easily accessible program.

BACKGROUND

Project engineers have identified some areas in the ILS glide slope math modeling process, which with modification, will increase the efficiency of the modeling process:

1. In order to run a glide slope math model, it is necessary to compute the antenna heights of the system under consideration. These values are then used as inputs to the modeling process. To determine these antenna heights, the operator must estimate the average slope of the terrain in front of the glide slope antenna mast. This value is algebraically subtracted from the flat earth glide angle to yield an operator corrected glide angle (OCGA). Since the glide slope math model provides a more accurate representation of the terrain, there is normally a discrepancy between the modeled glide angle (MGA) and the desired glide angle (DGA). To correct this error, the antenna heights must be recalculated using the difference between MGA and DGA as a correction factor. The model is then rerun using the new antenna heights.

   The difficulty occurs after the first modeling attempt when the new antenna heights are being computed. The OCGA used to compute the original antenna heights cannot be conveniently saved in the input or output files of the math modeling program without modification of the program. To avoid this the operator records this value in a logbook. This has proven to be cumbersome and the idea of a short program to calculate this value was conceived.

2. The operator must occasionally determine a new value for the ratio of the separate sideband amplitude to the carrier sideband signal amplitude (A-Ratio) based on the old value of the A-ratio and the desired glide path width. For convenience, this calculation is included in ANTHTS1.

DISCUSSION

ANTHTS1 is an interactive program written in FORTRAN and usable on the Honeywell 66/60 computer. The following portion of the discussion refers to the flowchart in Appendix A. The program first clears the screen and initializes variables RAD and DEG to values of 0.017453 and 57.2958, respectively (page A-1). These two variables are used throughout the program to convert angular values from degrees to radians and vice-versa. The variables SEL and SYS, declared as character variables at the beginning of the program, are used to guide program control to the proper point in the program based on user responses to various prompts from the program. After start-up, the program presents the user with a menu from which the user selects one option: antenna heights calculation (A-2), glide slope angle calculation (A-3) or A-Ratio calculation (A-4). If the antenna heights calcuation is selected, the program will request a value for glide slope angle (all angular values should be in degrees; linear values in feet). The program will

then request horizontal and vertical components of the terrain in front of the antenna mast. If the terrain is considered to be flat earth, the user should enter zero for each component. For terrain that slopes downward from the mast the user should enter a negative value for the vertical component. After the user enters these values, the program will compute the OCGA and then request the user to identify the antenna system. If the sideband reference system is selected, the operator must input a value for the ratio of the upper antenna height to the lower antenna height. At this point, sufficient data has been entered to allow the program to calculate the antenna heights for the antenna system. The program will provide the user with the option to determine the antenna offset(s). If this is desired the user will be asked to enter a value for the shortest horizontal distance between the mast and the runway centerline (A-5). The program computes the offset value(s) and outputs the antenna heights along with the antenna offset(s). Should the offset option not be selected, the program will output just antenna heights. In either case program control will return to the beginning of the program when the user hits the carriage return key. The other major options follow a similar procedure. The functions which ANTHTS1 can perform, along with their respective inputs, are listed below:

Function: Calculate antenna heights for any one system.

Inputs: Glide path angle
Horizontal component of terrain in front of mast
Vertical component of terrain in front of mast
Antenna heights ratio for sideband reference system

Function: Calculate antenna offset(s) for any one system.

Inputs: Antenna heights
Minimum horizontal distance between the mast and the runway centerline

Function: Calculate glide path angle for any one system.

Inputs: Upper antenna heights for null reference or sideband reference systems
Middle antenna heights for capture effect system
Antenna heights ratio for sideband reference system

Function: Calculate new A-Ratio.

Inputs: Old A-Ratio
Path width

Appendix B includes several sample runs of ANTHTS1 for verification purposes. Pages B-1 and B-2 both show calculations of antenna heights for a three-degree null reference antenna system. The run on page B-1 is calculated using level terrain and page B-2 shows the same computation with terrain rising from the base of the mast at almost exactly a one-degree slope. This yields an OCGA of two degrees. DOT/FAA Order No. 6750.6B, Chapter 2, Par. 10, Page 15, Table 2 confirms the values calculated in these two runs to be correct. Pages B-3 and B-4 indicate the calculated antenna heights and offsets for a three-degree capture effect and a

three-degree sideband reference antenna system. Pages B-5 through B-7 verify the accuracy of the glide slope angle calculations when using different antenna heights ratios for the sideband reference system. Page B-8 checks the reliability of the antenna heights recalculation function described in the background section of this report. The resultant values for all of these runs can be confirmed using the previously mentioned source.

Appendix C is a listing of the program.

REFERENCES

Installation Instructions For Category I and Category II ILS Glide Slopes, DOT/FAA, Order No. 6750.6B, 1979.

Instrument Landing System Glide Slope, FAA Training Division, Manual No. FV-301, 1964.

Offset1, FORTRAN Program to compute Antenna Heights and Offsets, Project No. 071-313-840, by John Walls, April 1982.

Makeouinpt, BASIC Program to Compute Antenna Heights and Offsets, Project No 071-313-840, by Jesse Jones, July 1981.

APPENDIX A

"ANTHTSI" FLOWCHART

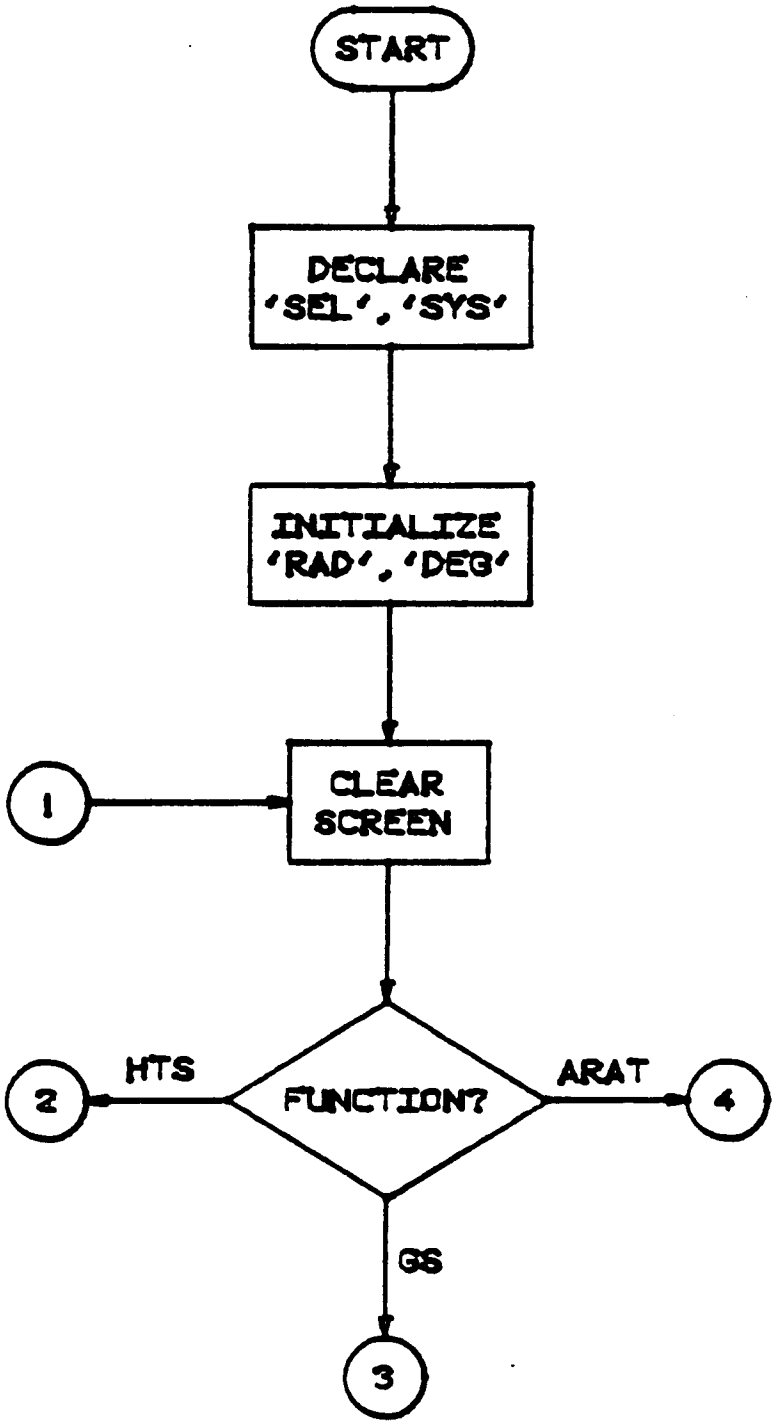

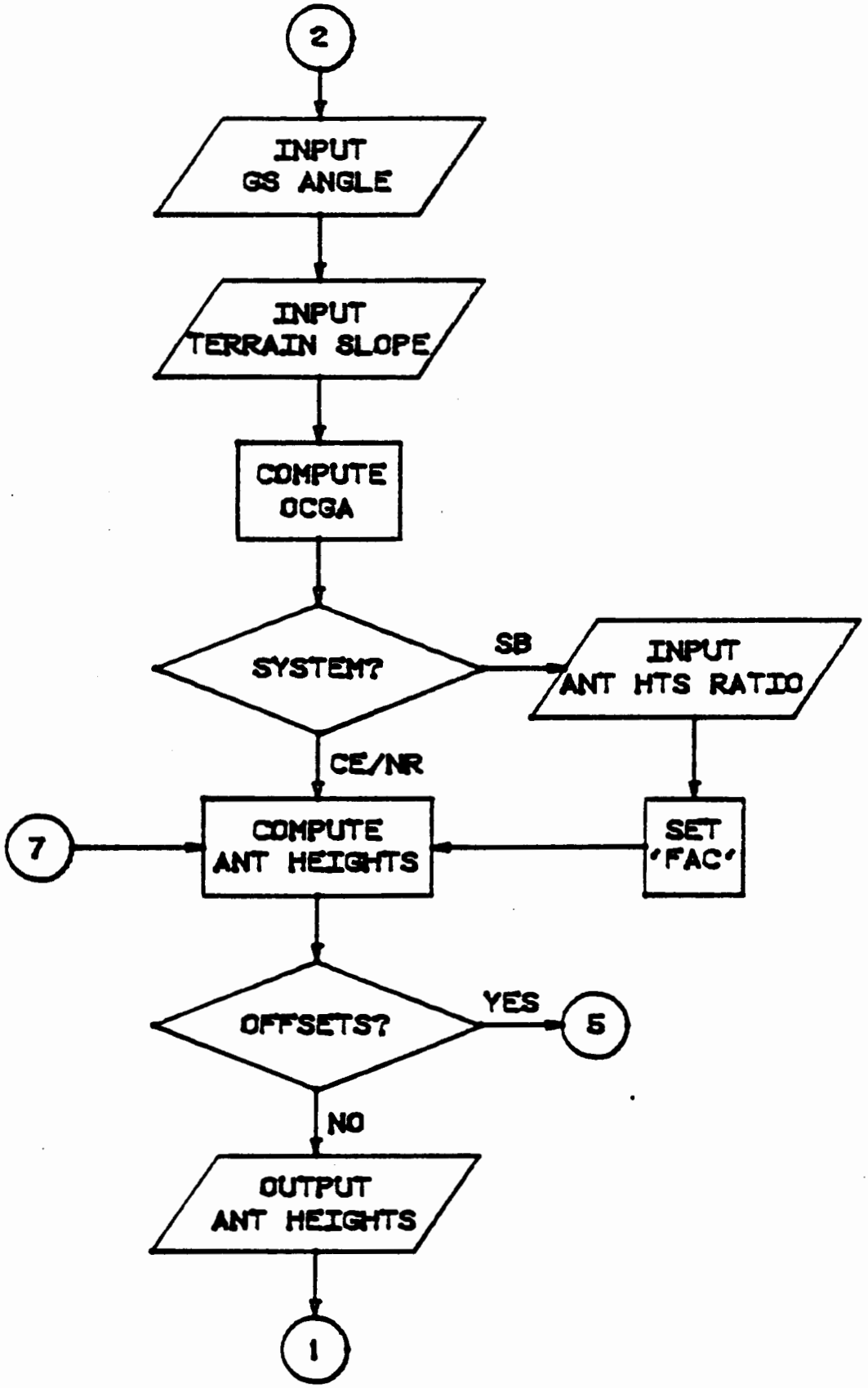
2
INPUT
GS ANGLE
INPUT
TERRAIN SLOPE
COMPUTE
OCGA
SYSTEM?
SB
INPUT
ANT HTS RATIO
CE/NR
7
COMPUTE
ANT HEIGHTS
SET
'FAC'
OFFSETS?
YES
5
NO
OUTPUT
ANT HEIGHTS
1

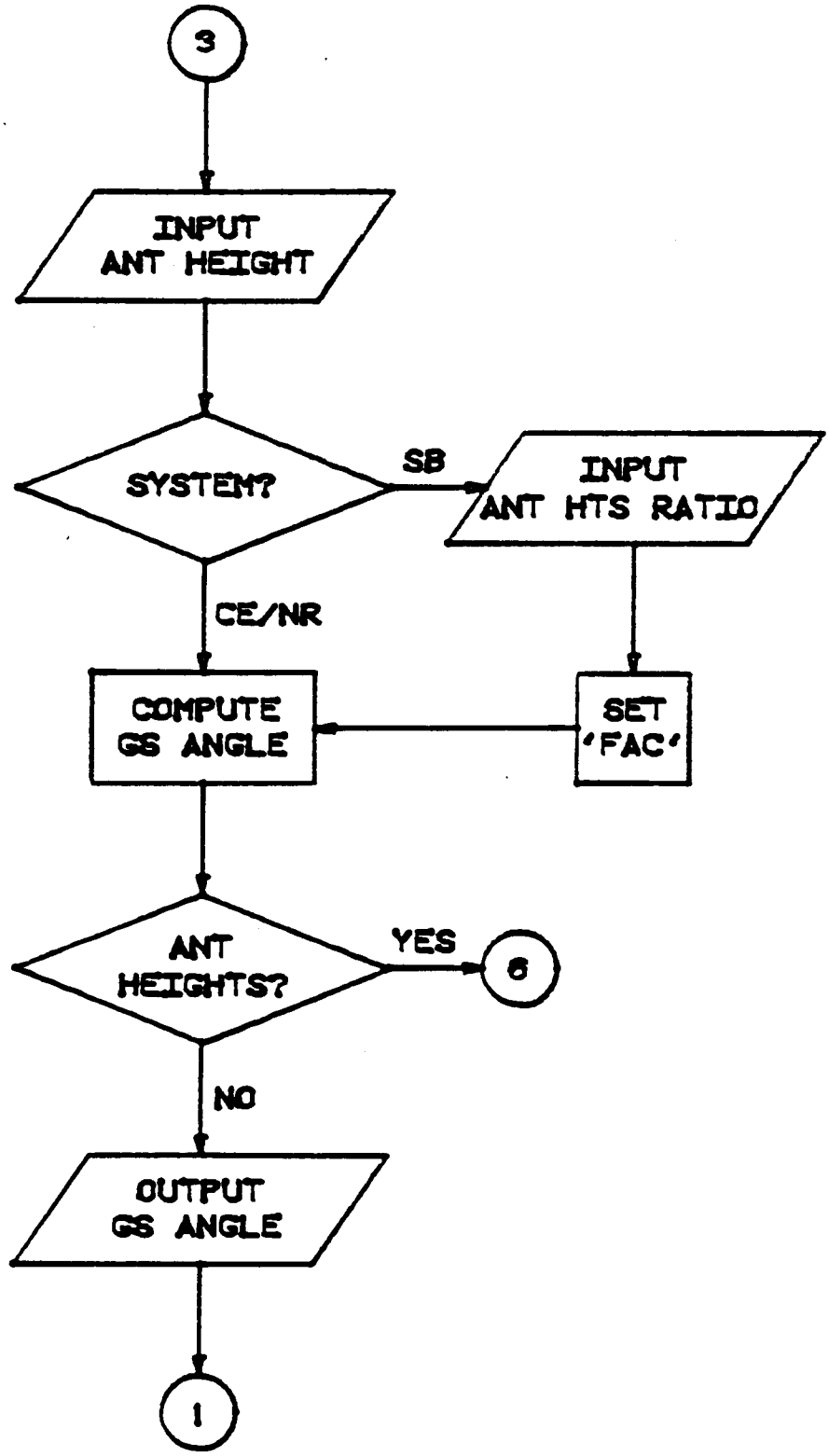
3
INPUT
ANT HEIGHT
SYSTEM?
SB
INPUT
ANT HTS RATIO
CE/NR
COMPUTE
GS ANGLE
SET
'FAC'
ANT
HEIGHTS?
YES
6
NO
OUTPUT
GS ANGLE
1

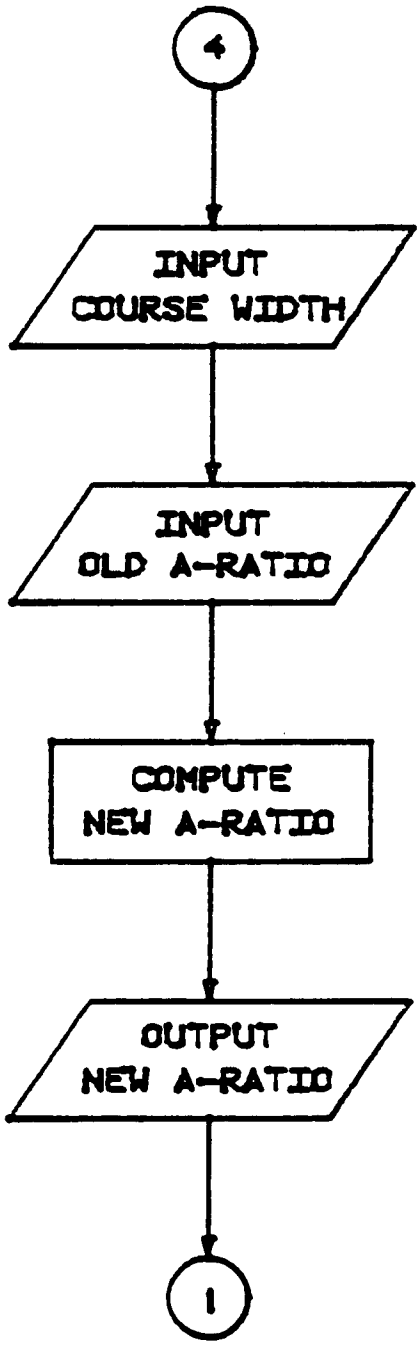

FAA WJH Technical Center
00092656

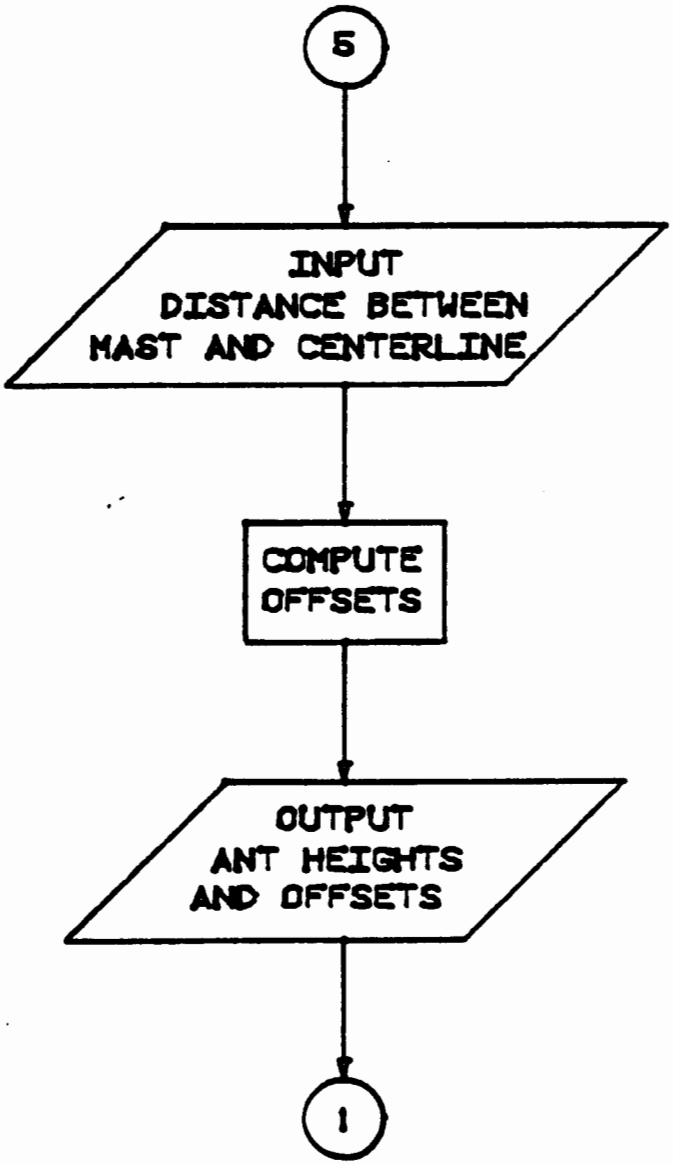
5
INPUT
DISTANCE BETWEEN
MAST AND CENTERLINE
COMPUTE
OFFSETS
OUTPUT
ANT HEIGHTS
AND OFFSETS
1

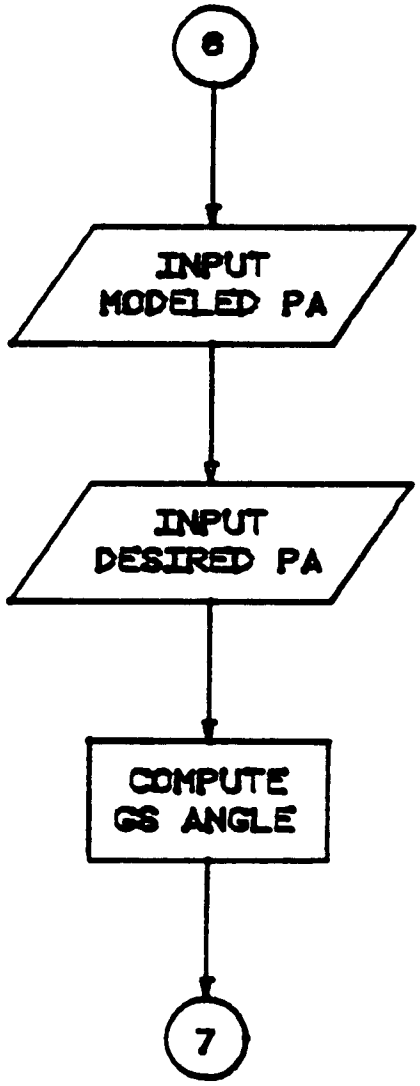
8
INPUT
MODELED PA
INPUT
DESIRED PA
COMPUTE
GS ANGLE
7

APPENDIX B

"ANTHTSI" SAMPLE RUNS

```
 ENTER ONE OF THE FOLLOWING:
    'H' - TO CALCULATE HEIGHT OF ANTENNAS
    'G' - TO CALCULATE GLIDESLOPE ANGLE
    'A' - TO CALCULATE NEW ARATIO
=H
 ENTER THE GLIDESLOPE ANGLE(DEGREES)
=3
 ENTER HORIZ(X) AND VERT(Z) COMPONENTS OF AVG SLOPE OF TERRAIN IN FRONT OF MAST(FEET)
=0.0
 ENTER ONE OF THE FOLLOWING:
    'CE' - FOR CAPTURE EFFECT SYSTEM
    'NR' - FOR NULL REF SYSTEM
    'SB' - FOR SIDEBAND REF SYSTEM
=NR
 DO YOU WANT ANTENNA OFFSETS?('Y' OR 'N')
=N
 SIDEBAND ANT HEIGHT:  20.27     CARRIER ANT HEIGHT:  14.13
 PRESS 'RETURN' TO CONTINUE
=
```

```
ENTER ONE OF THE FOLLOWING:
   'H' - TO CALCULATE HEIGHT OF ANTENNAS
   'G' - TO CALCULATE GLIDESLOPE ANGLE
   'A' - TO CALCULATE NEW ARATIO
=H
ENTER THE GLIDESLOPE ANGLE(DEGREES)
=3
ENTER HORIZ(X) AND VERT(Z) COMPONENTS OF AVG SLOPE OF TERRAIN IN FRONT OF MAST(FEET)
=1000,17.5
ENTER ONE OF THE FOLLOWING:
   'CE' - FOR CAPTURE EFFECT SYSTEM
   'NR' - FOR NULL REF SYSTEM
   'SB' - FOR SIDEBAND REF SYSTEM
=NR
DO YOU WANT ANTENNA OFFSETS?('Y' OR 'N')
=N
SIDEBAND ANT HEIGHT:  42.44     CARRIER ANT HEIGHT:  21.22
PRESS 'RETURN' TO CONTINUE
=
```

```
 ENTER ONE OF THE FOLLOWING:
    'H' - TO CALCULATE HEIGHT OF ANTENNAS
    'G' - TO CALCULATE GLIDESLOPE ANGLE
    'A' - TO CALCULATE NEW ARATIO
=H
 ENTER THE GLIDESLOPE ANGLE(DEGREES)
=3
 ENTER HORIZ(X) AND VERT(Z) COMPONENTS OF AVG SLOPE OF TERRAIN IN FRONT OF MAST(FEET)
=0,0
 ENTER ONE OF THE FOLLOWING:
    'CE' - FOR CAPTURE EFFECT SYSTEM
    'NR' - FOR NULL REF SYSTEM
    'SB' - FOR SIDEBAND REF SYSTEM
=SB
 ENTER THE HEIGHT RATIO(SIDEBAND/CARRIER)
=3
 DO YOU WANT ANTENNA OFFSETS?('Y' OR 'N')
=Y
 ENTER THE HORIZONTAL DISTANCE(FEET) BETWEEN THE ANTENNA MAST
 AND THE RUNWAY CENTERLINE(INCLUDE SIGN)
=400
 SIDEBAND ANT HEIGHT:  21.26     CARRIER ANT HEIGHT:   7.00
 SIDEBAND ANTENNA OFFSET: 300.400
 PRESS 'RETURN' TO CONTINUE
=
```

```
ENTER ONE OF THE FOLLOWING:
   'H' - TO CALCULATE HEIGHT OF ANTENNAS
   'G' - TO CALCULATE GLIDESLOPE ANGLE
   'A' - TO CALCULATE NEW ARATIO
=H
ENTER THE GLIDESLOPE ANGLE(DEGREES)
=3
ENTER HORIZ(X) AND VERT(Z) COMPONENTS OF AVG SLOPE OF TERRAIN IN FRONT OF MAST(FEET)
=0,0
ENTER ONE OF THE FOLLOWING:
   'CE' - FOR CAPTURE EFFECT SYSTEM
   'NR' - FOR NULL REF SYSTEM
   'SB' - FOR SIDEBAND REF SYSTEM
=CE
DO YOU WANT ANTENNA OFFSETS?('Y' OR 'N')
=Y
ENTER THE HORIZONTAL DISTANCE(FEET) BETWEEN THE ANTENNA MAST
AND THE RUNWAY CENTERLINE(INCLUDE SIGN)
=-400
UPP ANT HEIGHT:  42.40     MID ANT HEIGHT:  28.27     LOW ANT HEIGHT:  14.13
UPPER ANTENNA OFFSET:-398.752     LOWER ANTENNA OFFSET:-400.740
PRESS 'RETURN' TO CONTINUE
=
```

```
 ENTER ONE OF THE FOLLOWING:
    'H' - TO CALCULATE HEIGHT OF ANTENNAS
    'G' - TO CALCULATE GLIDESLOPE ANGLE
    'A' - TO CALCULATE NEW ARATIO
=G
 ENTER ONE OF THE FOLLOWING:
    'SB' - FOR SIDEBAND REF SYSTEM
    'CO' - IF NOT SIDEBAND REFERENCE SYSTEM
=SB
 ENTER HEIGHT(FEET) OF UPPER ANTENNA
=20.1
 ENTER THE HEIGHT RATIO(SIDEBAND/CARRIER)
=2.5
 DO YOU WANT RECALCULATED ANTENNA HEIGHTS BASED ON THE DIFFERENCE BETWEEN
 ACTUAL PATH ANGLE AND DESIRED PATH ANGLE?('Y' OR 'N')
=N
 GLIDESLOPE ANGLE:   3.01
 PRESS 'RETURN' TO CONTINUE
=
```

```
 ENTER ONE OF THE FOLLOWING:
    'H' - TO CALCULATE HEIGHT OF ANTENNAS
    'G' - TO CALCULATE GLIDESLOPE ANGLE
    'A' - TO CALCULATE NEW ARATIO
=G
 ENTER ONE OF THE FOLLOWING:
    'SB' - FOR SIDEBAND REF SYSTEM
    'GO' - IF NOT SIDEBAND REFERENCE SYSTEM
=SB
 ENTER HEIGHT(FEET) OF UPPER ANTENNA
=21.1
 ENTER THE HEIGHT RATIO(SIDEBAND/CARRIER)
=3
 DO YOU WANT RECALCULATED ANTENNA HEIGHTS BASED ON THE DIFFERENCE BETWEEN
 ACTUAL PATH ANGLE AND DESIRED PATH ANGLE?('Y' OR 'N')
=N
 GLIDESLOPE ANGLE:   3.02
 PRESS 'RETURN' TO CONTINUE
=
```

```
 ENTER ONE OF THE FOLLOWING:
    'H' - TO CALCULATE HEIGHT OF ANTENNAS
    'G' - TO CALCULATE GLIDESLOPE ANGLE
    'A' - TO CALCULATE NEW ARATIO
=G
 ENTER ONE OF THE FOLLOWING:
    'SB' - FOR SIDEBAND REF SYSTEM
    'CO' - IF NOT SIDEBAND REFERENCE SYSTEM
=SB
 ENTER HEIGHT(FEET) OF UPPER ANTENNA
=22.5
 ENTER THE HEIGHT RATIO(SIDEBAND/CARRIER)
=4
 DO YOU WANT RECALCULATED ANTENNA HEIGHTS BASED ON THE DIFFERENCE BETWEEN
 ACTUAL PATH ANGLE AND DESIRED PATH ANGLE?('Y' OR 'N')
=N
 GLIDESLOPE ANGLE:   3.02
 PRESS 'RETURN' TO CONTINUE
=
```

```
ENTER ONE OF THE FOLLOWING:
   'H' - TO CALCULATE HEIGHT OF ANTENNAS
   'G' - TO CALCULATE GLIDESLOPE ANGLE
   'A' - TO CALCULATE NEW ARATIO
=G
ENTER ONE OF THE FOLLOWING:
   'SB' - FOR SIDEBAND REF SYSTEM
   'CO' - IF NOT SIDEBAND REFERENCE SYSTEM
=CO
ENTER ONE OF THE FOLLOWING:
   1) HEIGHT(FEET) OF UPPER ANTENNA FOR NULL REFERENCE SYSTEM
   2) HEIGHT(FEET) OF MIDDLE ANTENNA FOR CAPTURE EFFECT SYSTEM
=28.26
DO YOU WANT RECALCULATED ANTENNA HEIGHTS BASED ON THE DIFFERENCE BETWEEN
ACTUAL PATH ANGLE AND DESIRED PATH ANGLE?('Y' OR 'N')
=Y
ENTER ACTUAL(A) AND DESIRED(B) PATH ANGLES((A,B)DEGREES)
=2.0,3
ENTER ONE OF THE FOLLOWING:
   'CE' - FOR CAPTURE EFFECT SYSTEM
   'NR' - FOR NULL REF SYSTEM
=NR
DO YOU WANT ANTENNA OFFSETS?('Y' OR 'N')
=N
SIDEBAND ANT HEIGHT:  26.58     CARRIER ANT HEIGHT:  13.25
PRESS 'RETURN' TO CONTINUE
=
```

```
10        CHARACTER *2SEL,SYS
20        DATA RAD,DEG/.017453,57.2958/
30*
40      1 PRINT ,""
50        DO 2 I=1,200000
60      2 CONTINUE
70*************************************************
80*                                               *
90*        PROGRAM: ANTHTS1                       *
100*        AUTHOR: BRUCE L. PERRY                *
110*          DATE: 19 NOVEMBER 1982              *
120*                                               *
130*************************************************
140*
150*       SELECT HEIGHT,GLIDE SLOPE OR A-RATIO CALCULATIONS
160*
170     10 WRITE(6,15)
180        WRITE(6,20)
190        WRITE(6,25)
200        WRITE(6,85)
210        READ ,SEL
220        IF(SEL.EQ.'H')GO TO 1000
230        IF(SEL.EQ.'G')GO TO 2000
240        IF(SEL.EQ.'A')GO TO 3000
250        GO TO 10
260*
```

```
270*                COMPUTE OPERATOR CORRECTED GLIDE SLOPE ANGLE
280*
290   1000          WRITE(6,45)
300                 READ ,GS
310                 WRITE(6,90)
320                 READ ,X,Z
330                 IF(X.EQ.0)GO TO 1001
340                 GS=GS-(ATAN(Z/X)*DEG)
350*
360*                SELECT ANTENNA SYSTEM
370*
380   1001          WRITE(6,15)
390                 WRITE(6,30)
400                 WRITE(6,35)
410                 WRITE(6,40)
420                 READ ,SYS
430                 IF(SYS.EQ.'CE')GO TO 1100
440                 IF(SYS.EQ.'NR')GO TO 1200
450                 IF(SYS.EQ.'SB')GO TO 1300
460                 GO TO 1001
470*
```

```
480*                    CALCULATE CAPTURE EFFECT SYSTEM ANTENNA HEIGHTS
490*                    OPTION: CALCULATE ANTENNA OFFSETS
500*
510   1100              HT1=1.4793/SIN(GS*RAD)
520                     HT2=HT1/2.
530                     HT3=HT1+HT2
540   1101              WRITE(6,50)
550                     READ ,SEL
560                     IF(SEL.EQ.'N')GO TO 4000
570                     IF(SEL.NE.'Y')GO TO 1101
580                     WRITE(6,55)
590                     WRITE(6,56)
600                     READ ,DIS
610                     OFFST1=DIS-((HT3)**2-(HT1)**2)/(DIS*2.)
620                     OFFST2=DIS+((HT1)**2-(HT2)**2)/(DIS*2.)
630                     GO TO 4010
640*
```

```
650*                    CALCULATE NULL REFERENCE SYSTEM ANTENNA HEIGHTS
660*                    OPTION: CALCULATE ANTENNA OFFSET
670*
680   1200              HT1=1.4793/SIN(GS*RAD)
690                     HT2=HT1/2.
700   1201              WRITE(6,50)
710                     READ ,SEL
720                     IF(SEL.EQ.'N')GO TO 4100
730                     IF(SEL.NE.'Y')GO TO 1201
740                     WRITE(6,55)
750                     WRITE(6,56)
760                     READ ,DIS
770                     OFFST1=DIS-((HT1)**2-(HT2)**2)/(DIS*2.)
780                     GO TO 4110
790*
```

```
800*                    CALCULATE SIDEBAND REFERENCE SYSTEM ANTENNA HEIGHTS
810*                    OPTION: CALCULATE ANTENNA OFFSET
820*
830   1300              WRITE(6,60)
840                     READ ,RAT
850                     IF(RAT.EQ.2.5)FAC=1.4
860                     IF(RAT.EQ.3.)FAC=1.33
870                     IF(RAT.EQ.4.)FAC=1.25
880   1301              HT1=1.4793/SIN(GS*FAC*RAD)
890                     HT2=HT1/RAT
900   1302              WRITE(6,50)
910                     READ ,SEL
920                     IF(SEL.EQ.'N')GO TO 4100
930                     IF(SEL.NE.'Y')GO TO 1302
940                     WRITE(6,55)
950                     WRITE(6,56)
960                     READ ,DIS
970                     OFFST1=DIS-((HT1)**2-(HT2)**2)/(DIS*2.)
980                     GO TO 4110
990*
```

```
1000*                 SELECT ANTENNA SYSTEM
1010*
1020  2000          WRITE(6,15)
1030                WRITE(6,40)
1040                WRITE(6,65)
1050                READ ,SYS
1060                IF(SYS.EQ.'SB')GO TO 2100
1070                IF(SYS.EQ.'GO')GO TO 2200
1080                GO TO 2000
1090*
```

```
1100*                    CALCULATE GLIDE SLOPE ANGLE FOR SIDEBAND REFERENCE SYSTE
1110*                    OPTION: RECALCULATE ANTENNA HEIGHTS
1120*
1130  2100               WRITE(6,70)
1140                     READ ,HT
1150                     WRITE(6,60)
1160                     READ ,RAT
1170                     IF(RAT.EQ.2.5)FAC=1.4
1180                     IF(RAT.EQ.3.)FAC=1.33
1190                     IF(RAT.EQ.4.)FAC=1.25
1200                     GS=ARSIN(1.4793/HT)/FAC*DEG
1210  2101               WRITE(6,95)
1220                     WRITE(6,96)
1230                     READ ,SEL
1240                     IF(SEL.EQ.'N')GO TO 4200
1250                     IF(SEL.NE.'Y')GO TO 2101
1260                     WRITE(6,99)
1270                     READ ,APA,DPA
1280                     GS=GS+(DPA-APA)
1290                     GO TO 1301
1300*
```

```
1310*                    CALCULATE GLIDE SLOPE ANGLE FOR NULL REF/CAP EFF SYSTEM
1320*                    OPTION: RECALCULATE ANTENNA HEIGHTS
1330*
1340  2200               WRITE(6,15)
1350                     WRITE(6,75)
1360                     WRITE(6,80)
1370                     READ ,HT
1380                     GS=ARSIN(1.4793/HT)*DEG
1390  2201               WRITE(6,95)
1400                     WRITE(6,96)
1410                     READ ,SEL
1420                     IF(SEL.EQ.'N')GO TO 4200
1430                     IF(SEL.NE.'Y')GO TO 2201
1440                     WRITE(6,99)
1450                     READ ,APA,DPA
1460                     GS=GS+(DPA-APA)
1470  2202               WRITE(6,15)
1480                     WRITE(6,30)
1490                     WRITE(6,35)
1500                     READ ,SEL
1510                     IF(SEL.EQ.'CE')GO TO 1100
1520                     IF(SEL.EQ.'NR')GO TO 1200
1530                     GO TO 2202
1540*
```

```
*                CALCULATE NEW A-RATIO
*
 3000            WRITE(6,140)
                 READ ,A,B
                 ARAT=A/.7*B
                 GO TO 4300
*
*                OUTPUT
*
 4000            WRITE(6,100)HT3,HT1,HT2
                 GO TO 999
 4010            WRITE(6,100)HT3,HT1,HT2
                 WRITE(6,105)OFFST1,OFFST2
                 GO TO 999
 4100            WRITE(6,110)HT1,HT2
                 GO TO 999
 4110            WRITE(6,110)HT1,HT2
                 WRITE(6,115)OFFST1
                 GO TO 999
 4200            WRITE(6,120)GS
                 GO TO 999
 4300            WRITE(6,150)ARAT
                 GO TO 999
*
*
  999 WRITE(6,160)
      READ ,SEL
      IF(SEL.EQ.' ')GO TO 1
      GO TO 999
*
```

```
1850     15 FORMAT(1H1," ENTER ONE OF THE FOLLOWING:")
1860     20 FORMAT(1H ,T5,"'H' - TO CALCULATE HEIGHT OF ANTENNAS")
1870     25 FORMAT(1H ,T5,"'G' - TO CALCULATE GLIDESLOPE ANGLE")
1880     30 FORMAT(1H ,T5,"'CE' - FOR CAPTURE EFFECT SYSTEM")
1890     35 FORMAT(1H ,T5,"'NR' - FOR NULL REF SYSTEM")
1900     40 FORMAT(1H ,T5,"'SB' - FOR SIDEBAND REF SYSTEM")
1910     45 FORMAT(1H1," ENTER THE GLIDESLOPE ANGLE(DEGREES)")
1920     50 FORMAT(1H1," DO YOU WANT ANTENNA OFFSETS?('Y' OR 'N')")
1930     55 FORMAT(1H ," ENTER THE HORIZONTAL DISTANCE(FEET) BETWEEN THE ANTENNA
AST")
1940     56 FORMAT(1H ," AND THE RUNWAY CENTERLINE(INCLUDE SIGN)")
1950     60 FORMAT(1H ," ENTER THE HEIGHT RATIO(SIDEBAND/CARRIER)")
1960     65 FORMAT(1H ,T5,"'GO' - IF NOT SIDEBAND REFERENCE SYSTEM")
1970     70 FORMAT(1H ," ENTER HEIGHT(FEET) OF UPPER ANTENNA")
1980     75 FORMAT(1H ,T5,"1) HEIGHT(FEET) OF UPPER ANTENNA FOR NULL REFERENCE S
TEM")
1990     80 FORMAT(1H ,T5,"2) HEIGHT(FEET) OF MIDDLE ANTENNA FOR CAPTURE EFFECT
STEM")
```

```
2000     85 FORMAT(1H ,T5,"'A' - TO CALCULATE NEW ARATIO")
2010     90 FORMAT(1H ," ENTER HORIZ(X) AND VERT(Z) COMPONENTS OF AVG SLOPE OF T
RAIN IN FRONT OF MAST(FEET)")
2020     95 FORMAT(1H ," DO YOU WANT RECALCULATED ANTENNA HEIGHTS BASED ON THE D
FERENCE BETWEEN")
2030     96 FORMAT(1H ," ACTUAL PATH ANGLE AND DESIRED PATH ANGLE?('Y' OR 'N')")
2040     99 FORMAT(1H ," ENTER ACTUAL(A) AND DESIRED(B) PATH ANGLES((A,B)DEGREES
)
2050    100 FORMAT(1H ," UPP ANT HEIGHT:",F7.2,5X,"MID ANT HEIGHT:",F7.2,5X,"LOW
NT HEIGHT:",F7.2)
2060    105 FORMAT(1H ," UPPER ANTENNA OFFSET:",F8.3,5X,"LOWER ANTENNA OFFSET:",
.3)
2070    110 FORMAT(1H ," SIDEBAND ANT HEIGHT:",F7.2,5X,"CARRIER ANT HEIGHT:",F7.

2080    115 FORMAT(1H ," SIDEBAND ANTENNA OFFSET:",F8.3)
2090    120 FORMAT(1H ," GLIDESLOPE ANGLE:",F7.2)
2100    140 FORMAT(1H ," ENTER COURSE WIDTH(A) AND OLD ARATIO(B) - (A,B)")
2110    150 FORMAT(1H ," NEW ARATIO:",F6.3)
2120    160 FORMAT(1H ," PRESS 'RETURN' TO CONTINUE")
2130        END
```