82-100-9641

FAA WJH Technical Center
00092672

FAA TECHNICAL CENTER LETTER REPORT

MODE S DATA LINK RELIABILITY,
PHASE II

[redacted]

MAR 22 Rec'd

TECHNICAL CENTER LIBRARY
ATLANTIC CITY, N.J. 08405

by

P. S. Barbagallo
D. G. Shreeves

OCTOBER 1982

U. S. DEPARTMENT OF TRANSPORTATION
FEDERAL AVIATION ADMINISTRATION
TECHNICAL CENTER
Atlantic City Airport, N.J. 08405

TABLE OF CONTENTS

	Page
LIST OF ABBREVIATIONS AND ACRONYMS	iv
1.0 INTRODUCTION	1
1.1 Background	1
1.2 Objectives of Phase II	2
2.0 DISCUSSION	2
2.1 Simulated Phase I Flight Paths (Test Series 1000)	2
2.1.1 Test Goals	3
2.1.2 Test Configuration	3
2.1.3 Test Development	3
2.1.4 Test Data	4
2.2 Simulated High and Capacity Channel Loading Tests (Series 2000)	4
2.2.1 Test Goals	5
2.2.2 Test Configuration	5
2.2.3 Test Development	5
2.2.4 Test Data	6
2.3 Simulated Multipath Interference Signal Tests (Series 3000)	6
2.3.1 Test Goals	6
2.3.2 Test Configuration	6
2.3.3 Test Development	7
2.3.4 Test Data	8
3.0 DEFINITIONS	16
4.0 REFERENCES	17
APPENDIX A, DEFINITION OF PERFORMANCE MEASURES	19

LIST OF ILLUSTRATIONS AND TABLES

Figure		Page
1	Test Bed for Simulated Flight Tests and Channel Loading Tests	11
2	Test Bed for Boresight Multipath Tests	12
3	Test Bed for Various Azimuth Multipath Tests	13
3	Schedule, Link Reliability Program, Phase II	14
4	Schedule, Link Reliability Program, Phase III	15
5	Schedule, Mode S Link Reliability Program, Overview	15

Table		Page
1	Test Matrix for Link Reliability Program, Phase II	9
2	Performance Measures for Link Reliability Program, Phase II	10

LIST OF ABBREVIATIONS AND ACRONYMS

ADCSDL	Airborne Data Collection System for Data Link
AIRES	Aircraft Interference Reply Environment Simulator
ATC	Air traffic control
ATCRBS	Air Traffic Control Radar Beacon System
Comm-A	An interrogation format of the Mode S system containing a 56-bit ground-to-air data communications field.
Comm-B	A reply format of the Mode S system containing a 56-bit air-to-ground data communications field
DABS	Former name for Mode S
DABSEF	DABS Experimental Facility
dB	Decibel
DPSK	Differential phase shift keying
ELM	Extended length message
ID	Aircraft identification code
Mode S	A radar beacon system in which all aircraft are assigned fixed, discrete, 24-bit addresses to allow selective interrogation/reply transactions between the ground sensor and a particular aircraft.
RF	Radio frequency
TTG	Test Target Generator
uS	Microsecond

1.0 INTRODUCTION

It is vital to the success of the Mode S beacon system and the numerous data link services which utilize the Mode S beacon channel, that link operation be characterized including a determination of the parameters limiting link operation. Utilization of the RF beacon channel is dependent on target densities and reinterrogation rates. With a given target density, the channel may become overloaded if each target requires repeated interrogations to obtain a valid reply. A number of physical and implementation parameters affect the link performance by altering the number of uplink and downlink signals necessary to complete a transaction. Previous test programs conducted at the Technical Center have characterized the Mode S system performance. Those tests, for the most part, were restricted to surveillance message processing, the primary function of the system. When user definable information is added to the surveillance message, the length of the digital signal is doubled. The test program conducted at the Technical Center will fully characterize channel performance with projected target densities and communication loading and determine RF signal levels and channel utilization in realistic, projected air traffic environments. The projected target densities and communication loadings are derived from the MITRE Corporation studies described in reference [2]. Operation with both surveillance and communication type Mode S messages will be investigated.

1.1 BACKGROUND

The Mode S system was developed by the Federal Aviation Administration (FAA) to upgrade the existing Air Traffic Control Radar Beacon System (ATCRBS). Anticipated air traffic by the year 2000 is projected to exceed traffic handling capabilities of the ATCRBS. The Mode S system overcomes the capacity problem, and provides a digital ground-air-ground communication link unavailable with the present system. The general purpose, two-way data link capability will support an extensive variety of services necessary for advanced ATC system automation. The critical nature of the majority of messages transmitted via the data link requires the rapid response and high message integrity protection capabilities inherent in the Mode S system.

Feasibility of the Mode S system and its data link capability was demonstrated with DABS Experimental Facility (DABSEF) at Lincoln Laboratory and with the three engineering models of the Mode S system operated and tested at the Technical Center. The surveillance information, without system user definable digital message fields, is obtained via the short, 56-bit, surveillance messages defined in the Mode S National Standard. When data is transmitted in conjunction with the surveillance information, message length is extended to 112 bits. The uplink communication messages are named Comm-A and the downlink messages are designated Comm-B in the National Aviation Standard for the Mode S Beacon System. Uplink interrogations are transmitted at a rate of four megabits per second at a radio frequency of 1030 MHz. The modulation of the carrier is differential phase shift keying (DPSK). The downlink data rate is one megabits per second on a carrier frequency of 1090 MHz. Pulse position modulation (PPM) is utilized on the downlink. Both legs of the link utilize a powerful burst error detection and correction code and a 24 bit long address. The addressing capability of the Mode S system will insure a unique combination of binary digits for all aircraft projected to use the national air space.

Uplink messages are accepted by a Mode S transponder only when the address contained in the message matches the aircraft ID and the message contains no errors. On the downlink as many as 17 consecutive bit errors

may be corrected in the reply message. The multi-channel receiver at the sensor develops the sum and difference signals for the monopulse position signals and a confidence level bit stream to indicate possible burst error positions.

During Phase I of this program, test flights were conducted within the coverage area of the Mode S sensor at the Technical Center. The tests indicated some adverse effects of flight patterns on link reliability [1]. To confirm and refine findings of these tests, the flight patterns will be repeated through simulation with controllable, simulated environments as part of phase II.

1.2 OBJECTIVES OF PHASE II.

The objective of the Mode S data link reliability tests is to measure the link reliabilty in environments representative of conditions to be encountered when Mode S is deployed. The target densities and communication loading limits were derived from MITRE Corporation studies, see reference [2]. The interference signal levels used for this test will be set near the maximum limit defined in the Mode S sensor specification, see reference [7]. The tests performed will separate and identify causes for degradation of reliability using the engineering model of the Mode S sensor at the Technical Center. Channel loading at projected levels and multipath effects will be simulated. All tests in this phase of the program will use simulated flights to reduce costs and to insure repeatability of the tests with predictable results. To substantiate findings of the first phase and to insure validity of the conclusions, a number of simulated flights will be executed repeatedly to produce sound statistical results.

2.0 DISCUSSION.

Three separate test series will be executed. The 1000 series tests will be performed to duplicate aircraft maneuvering tests performed during phase I testing but will utilize the more precise flight and environment controls available via simulation. The 2000 series tests will incorporate high interference signal levels and capacity target loadings on the sensor. During this series of tests, the test target movement will be restricted, to separate environmental effects from problems caused by aircraft maneuvers. The flights and all interference signal generating targets will be simulated to insure test repeatability and to obtain capacity target densities. The 3000 series tests will investigate reduction of system reliability due to multipath signals. Table 1 shows all tests scheduled for phase II in a matrix form.

Target replies and interference signals will be simulated by the special test signal generators designed for the purpose. These signal generators are part of the facilities at the Technical Center and are called the Aircraft Reply and Interferece Environment Simulator (ARIES) and the Test Target Generator (TTG). A brief description of the units is provided in section 3 of this document. A detailed description and performance specifications for these units are avilable in references [8] and [9] respectively.

2.1 SIMULATED PHASE I FLIGHT PATHS. (Test Series 1000)

As stated above, this test series will provide an extensive statistical basis for substantiation of results of phase I tests, and concurrently, enable precise control of the test environment. Two subseries of tests will be conducted for each simulated flight path:

a. Theta-half angle, which determines the instant of time when the sensor interrogates a target, will be reduced to zero to eliminate early interrogations.

b. Repeat tests with theta-half angle set to normal value of 0.989 degrees.

Testing with the theta-half of 0.549 degrees used in phase I will not be performed since a phase I recommendation was that theta-half be reduced to zero. All other test parameters and test procedures will be identical for the two subseries of tests and will be as described below. The 1000 series tests in table 1 pertain to this part of the program. The theta-half angle value and its application in the Mode S sensor are described in the report Data Link Reliability Test Phase I, reference [1] and the Mode S sensor specification, reference [7]. A brief description of the theta-half angle is provided in section 3 of this document.

2.1.1 Test Goals. The objectives of these tests are to determine effects of surveillance parameter variations on link reliability in a controlled, simulated environment. In the simulated flights range and azimuth parameters will be varied singly and in combination to determine effects on link performance of individual parameters and possible accelerated deterioration with a combination of changing parameters. Phase I flights will be emulated to substantiate the flight test findings with the broader data base that is available with simulation and at reasonable cost. The simulation flights will be performed with controllable interference and noise signal levels. In addition to repeating the patterns of phase I flights and parameter variations, acceleration of parameter variations will be introduced. The repeated simulation tests should result in predictably duplicate outcomes with the controlled signal environment. The simulation is intended to determine if phase I results were masked to some undetermined extent by interference signals existing in the environment at the time of the tests.

2.1.2 Test Configuration. The test bed for these tests is shown in Figure 1. The ARIES test signal generator will be used to provide responses to all interrogations generated by the Mode S sensor. The test target, as well as the background channel loading targets, will move along paths predetermined by the program defining the scenario. The test series identified as series 1000 in Table 1, uses only a single target, the test target. Although the ARIES unit will provide the reply messages, another Mode S transponder with the same address will receive the interrogations simultaneously with the ARIES unit. The transponder will be inhibited from generating a reply message by disabling its transmitter. All other functions of the transponder will remain enabled and will operate normally. This receive only transponder will be interconnected with the Airborne Data Collection System for Data Link (ADCSDL) to duplicate the recordings obtained from the flight tests performed during phase I. Data collection points are available at the sensor, at the ARIES, and at the ADCSDL. Uplink messages are generated within the sensor using the Com A/B Driver software module which will create data for the Comm-A message field of a predetermined number of targets. The reply message content will be generated internally by the ARIES unit. The ADCSDL will record all interrogations pertaining to the test target on magnetic tape.

2.1.3 Test Development. Three subseries of tests will be executed in this test series. The subseries are identified by the test numbers of 1100, 1200, and 1300 in Table 1. The basic difference between the subseries of tests will be the flight path of the simulated test target. The flight paths will emulate the actual flights performed in phase I of the program. The radial paths will simulate a straight line flight from one extreme point of the coverage area of the sensor to the opposite extreme point passing over the sensor site. The arc flight path will be complete circles in both the direction of and opposite to the antenna's

rotation. The sensor will be located at the center of the circles. The radius of the circles around the sensor will be the equivalent of 50, 40, 30, 20, and 10 nm. to duplicate phase I test flights.

The simulated flight paths, designated as circles in Table 1, will describe circles with centers placed along the radial path described above. The radius of each circle is determined by the maximum speed of 400 kts and adjusted to be within the standard turning rate of commercial airline practice. With a radius of 5 nm. the center of the circles are placed at 45, 35, 25, and 15 nm. to obtain at least one common point between all simulated flight paths.

Within each subseries of tests, five basic runs will be executed with the sensor's theta-half angle set to the nominal 0.989 degrees. The same five test runs will then be repeated with the sensor's theta-half angle set to zero degrees. Four runs will be executed with the simulated target maintaining a constant speed. The fifth test run will be executed with the test target experiencing a constant acceleration and deceleration of 10 knots per second. The acceleration will be within the capability of civil aircraft and will be arranged so as to complete an accelerate/decelerate cycle within each flight path. For example, the speed of the target aircraft will increase from 100 kts to 400 kts and decrease to 100 kts before it completes a full circle, for the circular portion of the target flight path.

2.1.4 Test Data. The number of repetitions of a given test run will depend on the observed results. Each test must be duplicated in sufficient numbers to give satisfactory statistical basis for conclusions. When no adverse effects within a given test run are experienced, the number of repeats using the same test parameters will not exceed 20. When the first 20 executions indicate abnormalities or reductions in system performance, the runs will be repeated in groups of 20 runs until the variation between test results falls within acceptable limits using a normal distribution curve. The variable speed tests will be repeated in groups of 50 runs. Data from ADCSDL will be used in conjunction with the data recorded by the ARIES system. Table 2 shows the data sources and performance measures used and developed for the tests. The sensor data collection descriptor numbers and the AIRES data extraction block numbers shown in the table are described in the definitions section of this report. The performance measures identified in Table 2 are described in Appendix A. The sensor descriptors and AIRES data blocks identified in the table are described in the definitions section of this report.

2.2 SIMULATED HIGH AND CAPACITY CHANNEL LOADING TESTS. (Series 2000)

Only a limited number of targets are available in tests using the real environment. Targets of opportunity are ATCRBS transponders along with a few ground based Mode S transponders. Simulation using the ARIES unit provides the only means to test the sensor operation in a high Mode S target environment. The test series is designed to investigate link performance when the sensor handles a large number of targets. The questions to be addressed include: number of scans, if any, during which the given target is not serviced due to channel loading, reinterrogation rates as the channel loading increases within the coverage area in general and within the vicinity of the test target in particular, and the overall effect on data link performance when channel loading and test target maneuvering effects are combined.

Capacity channel loading will be derived from the MITRE study [2] which specifies the total number of targets and the worst case concentration of targets in azimuth wedges anticipated in a Mode S environment. Since the ARIES system is not capable of handling Extended Length Messages (ELM), 112 bit long messages will be limited to only Comm-A and Comm-B messages. Not using the 112 bit ELM (Comm-C and Comm-D) messages will not affect the validity of the tests, since use of the ELM protocol would reduce requirements on the sensor and the loading of the communication channel. Thus, the tests performed using Comm-A/ Comm-B transactions as the communication load in addition to the surveillance transactions will represent worst case operation.

2.2.1 Test Goals. The objective of this test series is to determine the effects of channel loading, in the presence of interference signals, on the performance of the communication channel. Interference signals should reduce the sucessful completion of the communication transaction consisting of a Comm-A/Comm-B message pair. The effect of interference signals should be more pronounced on communication messages than on surveillance only transactions because the message lengths are doubled. To eliminate the effects of aircraft maneuvers, the test target will remain stationary for the majority of the tests in this series. Additional test runs will be performed where maneuver effects are combined with interference signals to observe effects on channel performance.

2.2.2 Test Configuration. The test bed for this test series is shown in figure 1. The ARIES system will generate responses to all interrogations generated by the sensor. The sensor will be programmed to use Comm-A interrogations for a fixed percentage of the targets. At the same time, the ARIES unit will be programmed to answer with a fixed Comm-B reply under the control of the sensor. The target address defined for the test target will be assigned to a Mode S transponder which will intercept all interrogations, but which will be prohibited from generating a reply message The transponder will be connected to the ADCSDL to provide additional data on magnetic tape. Interference signals will be in the form of ATCRBS fruit generated by the AIRES.

2.2.3 Test Development. A total of five separate subseries tests are planned. The tests are identified as the 2000 series in Tables 1 and 2. In the first two tests a total of 100 targets will be used. 20 of these targets, including the test target, will be interrogated and will respond with the Comm-A/B messages. The test target will remain stationary while the remaining targets will move in circles. In this fashion the number of targets will remain constant with a variable target density in the vicinity of the test target. With the test target remaining stationary within the coverage area, maneuver effects will be eliminated and any deterioration in link performance will be caused by channel loading. In the first test run the theta-half angle will be reduced to zero. In the second run the normal value for the angle will be used. During the next two test runs, all conditions will remain the same as before except the number of targets and the percentage of targets using the communication link with the sensor will be increased to capacity values as shown in Table 1. The test conditions in the fifth and sixth subseries tests will be modified from the previous two tests by allowing the test target to move in a circle at a constant speed. The circle described by the test target will be identical to the path nearest to the sensor position used in test series 1300 described previously. All tests will be repeated with the ATCRBS fruit rates noted in Table 1 to determine the combined effects of channel loading and fruit signals on link performance.

2.2.4 Test Data. The performance measures involving the test target will remain the same for this test series as for the 1000 test series. Additional performance measures for the system which give an indication of the total system operation will be added as required. The total number of interrogations transmitted for the number of existing targets and the number of valid replies received during each scan and the total test run will be determined. Table 2 shows the performance measures used for each test. These measures are defined in Appendix A. The sensor descriptors and AIRES data blocks identified in the table are described in the definitions section of this report.

2.3 SIMULATED MULTIPATH INTERFERENCE SIGNAL TESTS. (Series 3000) These tests will be run to simulate two signal paths converging at the receiver input. The two signals, labled reference and interference, will contain the same reply message delayed in time with respect to each other, to investigate the effects of multipath interference signals on the Mode S system. This effect should be most significant on the downlink leg of the channel, where the phase sensitive monopulse receiver determines aircraft position and monopulse value. For this reason, only the downlink leg reliability will be investigated using the Test Target Generator (TTG). Uplink performance cannot be evaluated using the TTG. In the Mode S uplink leg, any error will cause rejection of the message. Therefore, a test sequence involving gradual degradation of the uplink signal is not possible.

2.3.1 Test Goals. The objective of test series 3000 identified in Table 1, is to determine the effects of multipath signal problems on channel performance. Simulated signal conditions will be used. The multipath signals may affect the amplitude of the primary signal or may introduce pulses in time slots of the PPM modulated reply message. Both of these effects on the signal will be interpreted by the sensor signal processing equipment as errors. The errors may be the results of pulse amplitude variations in a message exceeding a fixed amount or translation of logical states in an information bit. The tests will be conducted to determine tolerable delays between the multipath signals with varied relative amplitudes and to determine the effects of multipath signals which arrive at the sensor with different azimuth values.

2.3.2 Test Configuration. - The TTG will be used in conjunction with the Mode S sensor. Only surveillance messages will be used during the tests. Multipath signals will cause rejection of the reply when 17 or more consecutive bits of the reply are affected by the multipath signal or when errors in more than one segment of the reply, separated by at least 17 bits occur. In either case, the error detection and correction algorithm inherent in the Mode S system will reject the reply as not correctable. Since the length of a surveillance reply exceeds the maximum tolerable error span, interference testing with the added length of a Comm-B reply message does not contribute additional useful information other than leading to the obvious conclusion that a longer message can experience interference over a longer span of time. Since surveillance replies are easier to program in the TTG and the software of the Mode S sensor can be used without modifications, surveillance messages in the downlink path will be investigated instead of Comm-B replies. This will provide an optimum information gained versus cost ratio.

Two test beds will be used for this test series since there are two possible multipath modes. In the usual case of multipath interference, there are two signal paths, the direct path from the aircraft to the sensor and a path via reflection from the earth's surface [6]. In this

mode the direct and reflected signal will arrive at the sensor with the same azimuth but with the reflected signal delayed in time due to the longer path length. The test configuration for this mode will utilize a simulated target at boresight azimuth. The reflected path will also be at boresight but will be delayed in time. As shown in Figure 2, a 1090 MHz oscillator will be used to provide the RF carrier for the two signal paths. The reference signal path will be modulated by Channel 0 of the TTG. The interference signal path will be modulated by Channel 1 of the TTG and will contain the same message as Channel 0 but will be delayed by a test parameter value of time. The effect of phase delays of the carrier frequency between the two signal paths will also be investigated. Since the target will be at boresight, only sum and omni signals will be generated. The direct (reference) and multipath (interference) signals will be recombined in the power dividers before being input into the sensor receiver.

In the less common mode of multipath interference, the reflected signal arrives at the sensor with a different azimuth value than the reference signal. As shown in Figure 3, the reference and interference signals will be developed and combined to produce the sum, difference, and omni signals consistant with two signals arriving at the sensor with different azimuth values. The interference signal is time delayed by the same technique used in the previous test.

2.3.3 Test Development. - A total of 3 subseries tests are planned to evaluate multipath effects. The tests are identified as 3100, 3200, and 3300. To simulate multipath, variable delays and attenuation levels will be introduced into a secondary downlink message which is identical to the primary TTG message. The secondary message will overlap the primary message by 17 or fewer bit positions. This value has been chosen since it is the maximum the Mode S error correcting code will accomodate. Previous tests have demonstrated that the error correcting algorithm used by the Mode S can correct burst errors of 17 contiguous bits. This test will evaluate the Mode S system capability to decode messages with multipath effects responsible for the burst error condition. In test 3100, the TTG will be used to transmit replies from a stationary target. There will be no multipath effects introduced for these targets to allow the results obtained to be used as a control for the remaining tests. In test 3200, the TTG will be used to transmit replies from a stationary target, located at the antenna boresight, with a second identical reply, also located at boresight, overlapping the final 17 bits of the first reply. The second, identical reply will simulate a multipath situation. The delay will be obtained by having TTG channel 1 output the same message as Channel 0 but delayed so that 17 or fewer bit positions in the message are overlapped. Power levels for the interference reply will be varied to simulate actual multipath conditions caused by differing path length and reflection coefficients. Test 3300 will be similar to 3200 except that the delayed signal will arrive with different azimuth than the reference signal. The azimuth differences will be produced by varying the time delay elements in the test bed of Figure 3.

An important consideration in the analysis of multipath test results is that the method described above is a simulation of a mutipath condition, not an actual multipath condition. The test method includes the time delay and azimuth change results of the interference signal, but does not include the possible phase reversals. Also, since two seperate signal modulators are used, the reference and interference signals will not be exactly equal as would be the case for a true multipath signal. To develop a more precise test configuration would require time delay elements on the order of miles of coaxial cable with the resulting dispersion and attenuation masking the results.

2.3.4 Test Data. -The performance measures for this test series will be the downlink ratio (See Appendix A) versus the characteristics of the interference signal. The TTG will output a surveillance reply containing reference and interference signals when interrogated by the sensor. The sensor extractor will be programmed to record all target replies and scan numbers. The sensor antenna will be terminated so that the only target replies in the system are those generated by the TTG. The test series will be run with given delays and attenuation levels. As preliminary test results are obtained, additional values of delay and attenuation may be warranted, at the discretion of the test manager, to provide a statistically significant data base. Sensor scan number will be noted at each change in delay and attenuation of the interference signal for data analysis purposes. The important parameters are the ratio of received replies to total replies and the values of delay that cause reply rejection to become significant.

Table 2 shows the data sources and the performance measures used and developed for these tests. The performance measures identified are described in Appendix A. The sensor descriptors and AIRES data blocks identified in the table are described in the definitions section of this report.

FAA WJH Technical Center
00092672

Table 1. Tests Matrix for Link Reliability Program, Phase II.

TEST NUMBER	NUMBER OF RUNS	TEST BED, SEE FIGURE NUMBER	CONTROLLED TEST PARAMETERS AT TEST BED: SENSOR THETA-HALF DEGREES	SENSOR MESSAGE TYPE A/B	TEST TARGET PATH TYPE	TEST TARGET SPEED KNTS	TEST TARGET ACC. KNT/S	ENVIRONMENT NUMBER OF TARGETS/ FRUIT RATE
SERIES 1000 TESTS.								
1111	20	1	0.0	100%	RAD.	100	0	1/0
1112	20	1	0.0	100%	RAD.	200	0	1/0
1113	20	1	0.0	100%	RAD.	300	0	1/0
1114	20	1	0.0	100%	RAD.	400	0	1/0
1115	80	1	0.0	100%	RAD.	1-400	10	1/0
1121	20	1	0.989	100%	RAD.	100	0	1/0
1122	20	1	0.989	100%	RAD.	200	0	1/0
1123	20	1	0.989	100%	RAD.	300	0	1/0
1124	20	1	0.989	100%	RAD.	400	0	1/0
1125	80	1	0.989	100%	RAD.	1-400	10	1/0
1211	20	1	0.0	100%	ARC	100	0	1/0
1212	20	1	0.0	100%	ARC	200	0	1/0
1213	20	1	0.0	100%	ARC	300	0	1/0
1214	20	1	0.0	100%	ARC	400	0	1/0
1215	80	1	0.0	100%	ARC	1-400	10	1/0
1221	20	1	0.989	100%	ARC	100	0	1/0
1222	20	1	0.989	100%	ARC	200	0	1/0
1223	20	1	0.989	100%	ARC	300	0	1/0
1224	20	1	0.989	100%	ARC	400	0	1/0
1225	80	1	0.989	100%	ARC	1-400	10	1/0
1311	20	1	0.0	100%	CIRCLE	100	0	1/0
1312	20	1	0.0	100%	CIRCLE	200	0	1/0
1313	20	1	0.0	100%	CIRCLE	300	0	1/0
1314	20	1	0.0	100%	CIRCLE	400	0	1/0
1315	80	1	0.0	100%	CIRCLE	1-400	10	1/0
1321	20	1	0.989	100%	CIRCLE	100	0	1/0
1322	20	1	0.989	100%	CIRCLE	200	0	1/0
1323	20	1	0.989	100%	CIRCLE	300	0	1/0
1324	20	1	0.989	100%	CIRCLE	400	0	1/0
1325	80	1	0.989	100%	CIRCLE	1-400	10	1/0
SERIES 2000 TESTS.								
2111	80	1	0.0	20%	POINT	0	0	100/0
2121	80	1	0.989	20%	POINT	0	0	100/0
2112	80	1	0.0	140/47	POINT	0	0	250/0
2122	80	1	0.989	140/47	POINT	0	0	250/0
2211	80	1	0.0	140/47	CIRCLE	200	0	250/0
2221	80	1	0.989	140/47	CIRCLE	200	0	250/0
2311	80	1	0.0	20%	POINT	0	0	100/2000
2321	80	1	0.989	20%	POINT	0	0	100/2000
2312	80	1	0.0	140/47	POINT	0	0	250/2000
2322	80	1	0.989	140/47	POINT	0	0	250/2000
2411	80	1	0.0	140/47	CIRCLE	200	0	250/2000
2421	80	1	0.989	140/47	CIRCLE	200	0	250/2000
SERIES 3000 TESTS.								
3100	20	2,3	---	---	POINT	0	0	1
3200	20	2	---	---	POINT	0	0	1
3300	20	3	---	---	POINT	0	0	1

TABLE 2. Performance Measures for Link Reliability Program, Phase II.

TEST NUMBER	DATA COLLECTION POINTS: SENSOR	DATA COLLECTION POINTS: ARIES	DATA COLLECTION POINTS: ADCSDL	LINK PERFORMANCE MEASURES — TEST TARGET RELATED PARAMETERS: Intr per Scan. IPS	Uplnk ratio UR	Dnlnk ratio DR	Rnd. Rel. ratio RRR	Early Intrr ratio EIR	Mono-pulse ratio IMR	Served Target in Scn ratio STR
	Descpt No. 0888 4103 4501	Data Block No.: 1, 2, 5, 8, 9, 10, 11, 12.	Magnetic Tape Recorder							
1000				X	X	X	X	X	X	
2000			---	X	X	X	X	X	X	X

TEST NUMBER	DATA COLLECTION POINTS: SENSOR	DATA COLLECTION POINTS: CONTROLLED PARAMETERS	INTERFERENCE PATH TEST EQUIPMENT SETTINGS: Attenuator setting dB	Delay uS	Azimuth Difference degrees	PERFORMANCE MEASURES: Intr per Scan IPS	Downlink ratio DR
	Descpt No.: 0888 4501	Relative signal strength of reference and interference signals.					
3100			0	0	0	X	X
3200		Time delay between reference and interference signals.	0	0.0	0	X	X
			0	57.0			
			0	39.0			
			0	40.0			
			0	41.25			
			0	42.5			
		Azimuth difference between reference and interference signals	3	0			
			3	57.0			
			3	39.0			
			3	40.0			
			3	41.25			
			3	42.5			
			20	0			
			20	57.0			
			20	39.0			
			20	40.0			
			20	41.25			
			20	42.5			
3300			REPEAT ALL OF THE SETTINGS FOR TEST SERIES 3200 ABOVE		0	X	X
					+/-1.0		
					+/-2.5		
					+/-5.0		
					+/-10.0		
					+/-20.0		

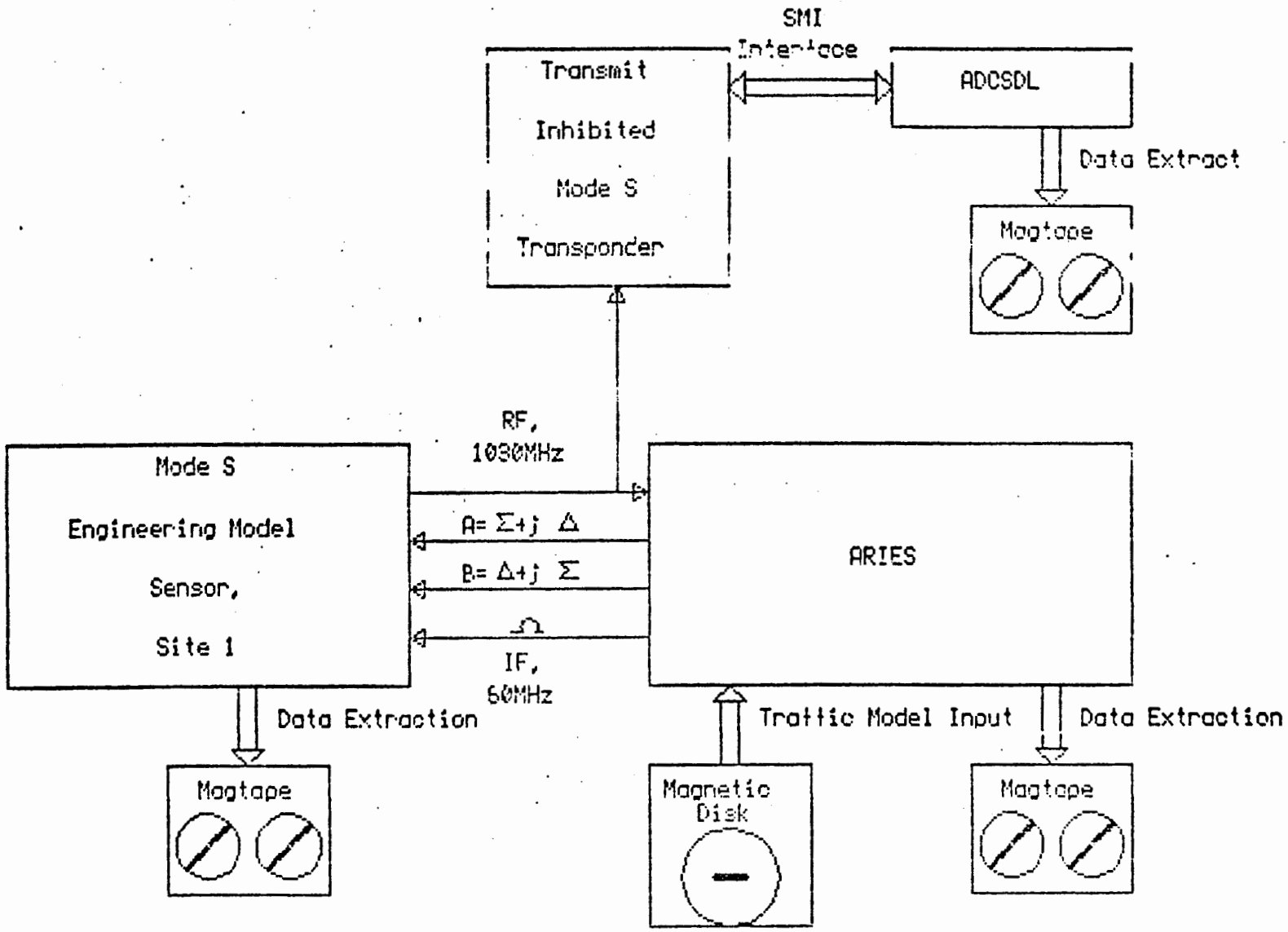

Figure 1 TEST BED FOR SIMULATED FLIGHT TESTS AND CHANNEL LOADING TESTS

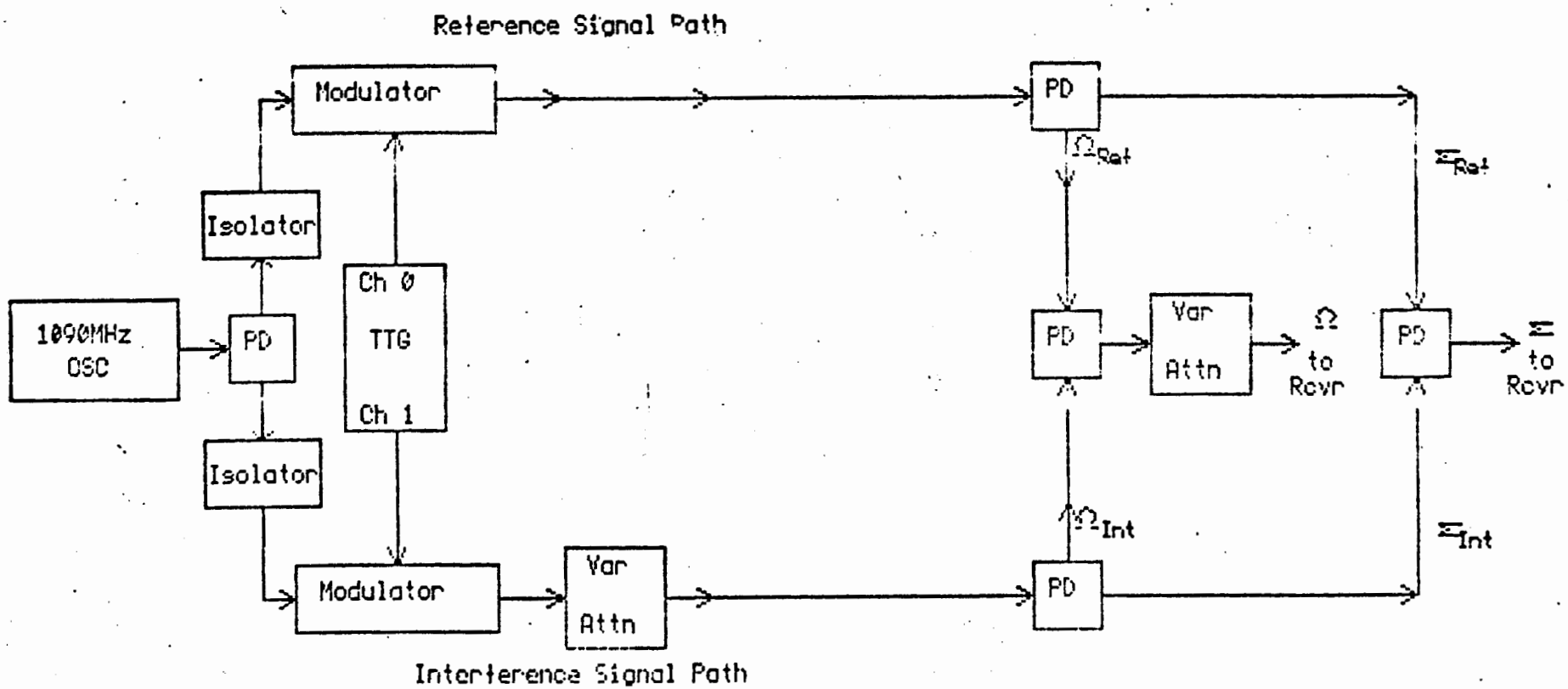

NOTE PD = Power Divider

FIGURE 2 TEST BED FOR BORESIGHT MULTIPATH TESTS

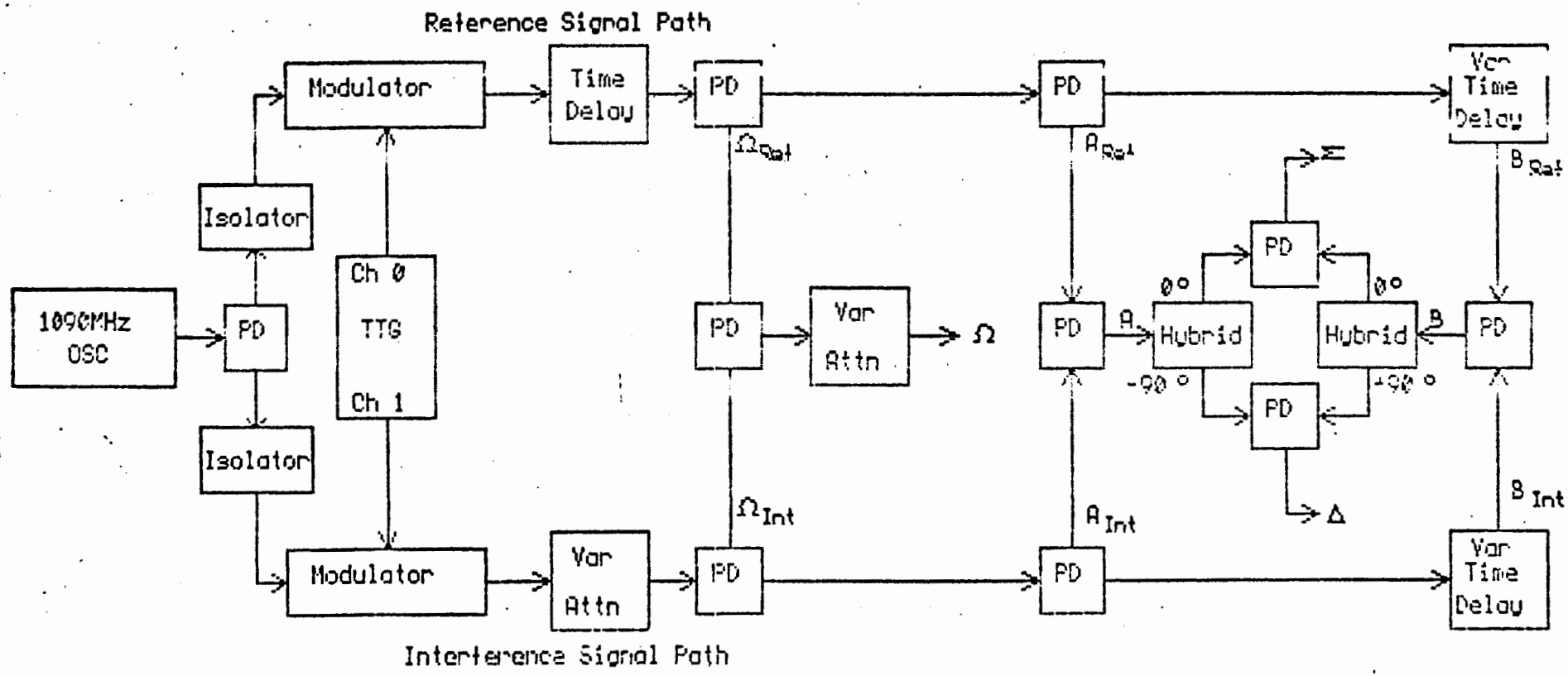

NOTES

1. PD = Power Divider
2. PDs are bilateral with equal time delay through each arm.

FIGURE 3 TEST BED FOR VARIOUS AZIMUTH MULTIPATH TESTS

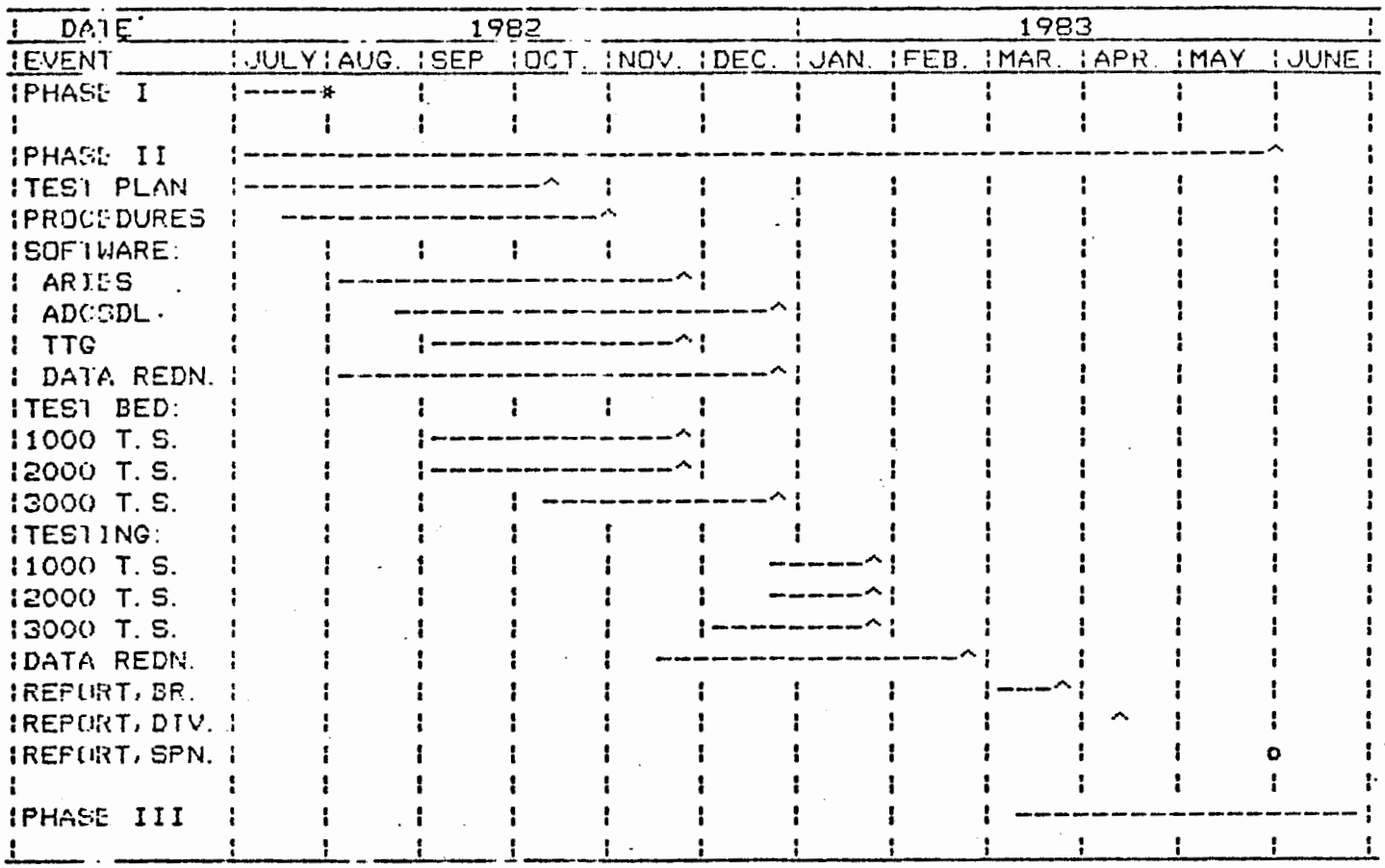

FIGURE 4. SCHEDULE, LINK RELIABILITY PROGRAM, PHASE II

```
| DATE          |                                   1983                                    |   1984   |
|EVENT          |MAR. |APR. |MAY  |JUNE |JULY |AUG. |SEP. |OCT. |NOV. |DEC. |JAN. |FEB.  |
|PHASE II       |-------------^     |     |     |     |     |     |     |     |     |      |
|               |     |     |     |     |     |     |     |     |     |     |     |      |
|PHASE III      |-----------------------------------------------------------^     |      |
|TEST PLAN      | --------^         |     |     |     |     |     |     |     |     |      |
|TEST BED       |     |     |-^   |     |     |     |     |     |     |     |     |      |
|SW. , DATA R.  |     |     | ---^  |     |     |     |     |     |     |     |     |      |
|TESTING        |     |     |     |---------^     |     |     |     |     |     |      |
|DATA REDN.     |     |     |     |     |---------^     |     |     |     |     |      |
|REPORT, BR.    |     |     |     |     |     | -------^  |     |     |     |     |      |
|REPORT, DIV.   |     |     |     |     |     |     |     |----^  |     |     |     |      |
|REPORT, SPN.   |     |     |     |     |     |     |     |     |     |     o     |      |
```

FIGURE 5. SCHEDULE, LINK RELIABILITY PROGRAM, PHASE III
(FOR REFERENCE ONLY)

```
|      DATE          |   1981    |          1982          |          1983          |   1984  |
|      EVENT         |2nd|3rd|4th|1st|2nd|3rd|4th|1st|2nd|3rd|4th|1st|2nd|
|                    |   |   |   |   |   |   |   |   |   |   |   |   |   |
|PHASE     I         |   |-----------------*|   |   |   |   |   |   |   |
|PHASE    II         |   |   |   |   |   |-------------^|   |   |   |   |
|PHASE   III         |   |   |   |   |   |   |   |   |-----------^|   |
|                    |   |   |   |   |   |   |   |   |   |   |   |   |   |
|PROGRAM SUMMARY     |   |   |   |   |   |   |   |   |   |   |   |   |   |
|FINAL REPORT, BR.   |   |   |   |   |   |   |   |   |   |   |--^|   |   |
|FINAL REPORT, DIV.  |   |   |   |   |   |   |   |   |   |   | -^|   |   |
|FINAL REPORT, SPN.  |   |   |   |   |   |   |   |   |   |   |   |   o   |
|                    |   |   |   |   |   |   |   |   |   |   |   |   |   |
|LINK REL. PROGRAM   |   |-----------------------------------------------^|
```

----^ SCHEDULED COMPLETION DATE
o DELIVERY OF REPORT TO SPONSOR
* COMPLETED EVENT

FIGURE 6. SCHEDULE, MODE S LINK RELIABILITY TEST PROGRAM OVERVIEW

3.0 DEFINITIONS

ARIES data block numbers: The ARIES extraction required for phase II testing will consist of the following data blocks:

Block	Block Name
1	32 bit buffer time
2	Error block
5	Fruit rate table
8	Model input record
9,10	ATCRBS/All Call replies
11,12	Mode S Interrogations

ARIES test equipment: The Aircraft Reply and Interference Environment Simulator (ARIES) is designed to simulate a radar beacon environment of up to 400 transponders plus high rates of interfering replies (fruit) for the purpose of testing beacon interrogators under heavy load. In particular, ARIES is designed to test the new class of interrogators developed for the Federal Aviation Administration as part of the Mode S system. The Mode S interrogators are called "sensors".

Due to the large target capacity of the Mode S sensors, it is not possible to find an air traffic environment that is dense enough to fully test the sensors under heavy load conditions. The complexity of the sensors precludes simply extrapolating performance from a less dense benchmark test. For this reason, and also due to a requirement to be able to repeat the identical test several times, an environment simulator has been built which appears to the sensor under test to be a dense beacon environment typical of what might be encountered in the future. ARIES is intended to provide this environment for purposes of acceptance and sensor evaluation testing.
The ARIES units can be programmed for a number of Mode S and ATCRBS targets. The apparent flight paths of each target is under software control. The accuracies of target positions and velocities exceed the Mode S sensor requirements. Both interrogation and reply message lengths defined for the Mode S system are accomodated by the ARIES unit. Within these message lengths a number of specified reply modes are implemented to fully support the operational protocol defined in the Mode S National Standard. In addition to the simulated targets, "fruit" interference signal levels may be programmed for a given test scenario. Fruit signals are ATCRBS replies generated in response to simulated interrogators other than the sensor under test.

Capacity channel load: For phase II tests capacity channel loading is defined as 250 Mode S targets with the sensor transmitting 180 Comm-A messages and receiving 47 Comm-B messages per scan.

High channel load: For phase II tests a high load will be defined as 100 active targets responding to interrogations with one of the targets as the test target. Comm-B messages using the standard Mode S protocol will comprise 20% of the targets. These active targets will concentrate to a peak of 12 targets in each of two consecutive 2.4 degree azimuth wedges, with seven of the 12 targets providing at least one Comm-B reply each per scan.

Sensor Descriptor Numbers: The Mode S sensor data extractor requires descriptor numbers to identify the data to be collected. Phase II testing uses some or all of the following descriptors:

Descriptor	Data Extracted
0888	Northmark record (time)
4103	Surveillance file entries
4501	Mode S replies

Test target: A Mode-S target with recording and responding capabilities.

Theta-half: A parameter used by the Mode S sensor's channel management software to determine the angle ahead of the antenna's 3 dB beamwidth at which interrogations to a given target aircraft will begin.

Transaction: One or more Comm-A interrogations to obtain one valid Comm-B reply, or surveillance interrogations to obtain a surveillance reply.

TTG test equipment: The Test Target Generator was designed to diagnose faults and to assure error free operation of the Mode S sensor. As a secondary mode of operation the TTG is used to calibrate the RF front end of the sensor through the simulation of monopulse signals.

The TTG consists of three parts: a controller, two memories, and an RF section. Test scenarios and data blocks in the form of computer data cards are read into the TTG and stored in the memories. The controller, triggered by a signal from the Modulation Control Unit of the Mode S sensor under test, causes the messages stored in the memories to be read out to the modulator of the RF section. The RF section converts the digital pulse train to two amplitude modulated RF signals corresponding to the sum and difference monopulse signals. Any position within the antenna 3dB band width may be simulated through manual adjustments. A detailed description of the TTG and its operation is available in reference [9].

Valid Comm-A interrogation: Comm-A interrogation addressed to test target and received by test target transponder without errors.

Valid Comm-B reply: Comm-B reply received by sensor or transponder test set without any errors or with correctable errors and with acceptable monopulse values.

4.0 REFERENCES

1. Shreeves, D.G. and Barbagallo, P.S., Data Link Reliability Test, Phase I, Federal Aviation Administration, Report number FAA-RD-82-105, 1982.

2. Mundra, Dr. Anand D., DABS Data Link Capacity Utilization: Interim Report, MITRE Corp., Report number MTR-80W301, 1980.

3. Lautenschlager, R.W. and Campanella, M.J., Jr., Test Plan: DABS Link Reliability, MITRE Corp., Report number MTR-81T6, 1981.

4. Lautenschlager, R.W. and Purcell, P.R., Discrete Address Beacon System (DABS) Development Test and Evaluation Program Master Plan, MITRE Corp., Report number MTR-7590, 1977.

5. Welch, J.D. and Robeck, P.H., Proposed Technical Characteristics for the Discrete Address Beacon System (DABS), Lincoln Laboratory, Report number ATC-71, 1977.

6. Blake, L.V., Radar Range-Performance Analysis, Technology Service Corp., D.C. Heath and Company, 1980.

7. Specification: Discrete Address Beacon System (DABS) Sensor, U.S., DOT, Federal Aviation Administration, Report No. FAA-E-2716, (Draft) June 1981.

8. Goon, M. and Spencer, D.A., The Aircraft Reply and Interference Environment Simulator (ARIES), Lincoln Laboratory, Report No. FAA-RD-78-96 (ATC-87), March 1979.

9. Operation and Maintenance Instructions: Test Target Generator, Texas Instruments, Inc., Report No. HB37-EG77 (Final Draft), May 1979.

APPENDIX A

1.0 PERFORMANCE MEASURES

1.1 GENERAL

The measures used to evaluate link performance during phase II testing of the Mode S data link system are defined in this appendix. Interrogations may be either Comm-A interrogations for the 1000 and 2000 series tests or surveillance interrogations for the 3000 series tests. Likewise, replies may be either Comm-B replies for the 1000 and 2000 series tests or surveillance replies for the 3000 series tests.

1.1.1 Interrogations Per Scan (IPS)- The average number of interrogations per antenna scan transmitted by the Mode S sensor during the test segment. The IPS value is calculated as:

$$IPS = \frac{\sum_{i=1}^{N} It}{N}$$

where:

$\sum_{i=1}^{N}$ is the symbol for summation from i = 1 to N.

It = total number of interrogations transmitted to the test target by the Mode S sensor in the ith scan.

N = total number of scans.

1.1.2 Uplink Ratio (UR)- The ratio of the number of interrogations received by test target transponder to the total number of interrogations transmitted to the test target. The UR value is calculated as:

$$UR = \frac{\sum_{i=1}^{N} (Ir/It)}{N}$$

where:

Ir = total number of interrogations received by test target transponder during the ith scan

1.1.3 Downlink Ratio (DR)- The ratio of the number of replies received by the Mode S sensor to the number of replies transmitted by test target transponder. The DR value is calculated as:

$$DR = \frac{\sum_{i=1}^{N} (Rr/Rt)}{N}$$

where:

Rr = total number of good replies received by the Mode S sensor in the ith scan from the test target

Rt = total number of replies transmitted by test target transponder during the ith scan

1.1.4 Round Reliability Ratio (RRR)- The ratio of the number of good replies received by the Mode S sensor to the number of interrogations transmitted by the sensor. The RRR value is calculated as:

$$RRR = \frac{\sum_{i=1}^{N} (Rr/It)}{N}$$

1.1.5 Served Target in Scan Ratio (STR)- The ratio of the number of Mode S targets for which interrogate/reply transactions are completed to the total number of Mode S targets in the sensor coverage area. The STR value is calculated as:

$$STRn = \frac{Ttn}{Tn}$$

where:

n = sensor scan number

Ttn = number of targets which have completed at least one Mode S transaction during scan n

Tn = total number of Mode S targets in the sensor coverage area durning scan n

1.1.6 Early Interrogation Ratio (EIR)- The ratio of interrogations sent to the test target before the test target is within the 3 dB beamwidth of the sensor antenna to total interrogations. Since simulation targets are being used for these tests, early interrogations are those which lead the boresight by greater than 1.22 degrees. The EIR value is calculated as:

$$EIR = \frac{\sum_{i=1}^{N} (Ie/It)}{N}$$

where:

Ie = total number of interrogations sent in the ith scan before the test target is within 1.22 degrees of boresight

1.1.7 Invalid Monopulse Ratio (IMR)- The ratio of Comm B replies received by the sensor with an invalid monopulse value to the total number of replies received. The IMR value is calculated as:

$$IMR = \frac{\sum_{i=1}^{N} (Rim/Rt)}{N}$$

where:

Rim = total number of replies received with an invalid monopulse value in the ith scan