83/31

FAA WJH Technical Center
00093451

FEDERAL AVIATION ADMINISTRATION
OCT 17 1983

DOT/FAA/CT-83/31
MDC J9838

Improved Interior Emergency Lighting Study

M. Teal
Douglas Aircraft Company
McDonnell Douglas Corporation

September 1983
Final Report

This document is available to the U.S. public through the National Technical Information Service, Springfield, Virginia 22161.

FAA WJH Technical Center
Tech Center Library
Atlantic City, NJ 08405

U.S. Department of Transportation
Federal Aviation Administration
Technical Center
Atlantic City Airport, N.J. 08405

AVAILABLE IN ELECTRONIC FORMAT

NOTICE

This document is disseminated under the sponsorship of the Department of Transportation in the interest of information exchange. The United States Government assumes no liability for the contents or use thereof.

The United States Government does not endorse products or manufacturers. Trade or manufacturer's names appear herein solely because they are considered essential to the object of this report.

FOREWORD

This report was prepared by Douglas Aircraft Company, of McDonnell Douglas Corporation, Long Beach, California, under Contract No. DTFA03-82-C00055. It covers an improved interior emergency lighting and emergency exit study for the evacuation of passengers during dense cabin smoke conditions. This work was conducted between September 30, 1982 and May 31, 1983.

The following Douglas personnel were principal contributors to the study:

M. Teal	Principal Investigator
A. A. Amster	Electrical Engineering
W. H. Shook	Interiors Engineering
M. M. Platte	System Analysis

The project was sponsored by the Department of Transportation, Federal Aviation Administration Technical Center, Atlantic City Airport, New Jersey. Dr. Thor Eklund was the Project Manager for the Federal Aviation Administration.

CONTENTS

Section		Page
	SUMMARY	v
1	INTRODUCTION	1
	Methodology	2
2	DISCUSSION	3
	Data Base	3
	Concepts and Analysis	7
	System Definition	13
	Cost Analysis	14
3	CONCLUSIONS	26
	REFERENCES	27
	APPENDIX – FEDERAL AVIATION REGULATIONS	28

ILLUSTRATIONS

Figure		Page
1	Smoke Layering	1
2	System Model 1	13
3	System Model 2	16
4	Cumulative Cost for System Model 1 (Markers and Signs) Production	21
5	Cumulative Cost for System Model 2 (Lights and Signs) Production	21

TABLES

Table		Page
1	Emergency Lighting Systems	4-5
2	Emergency Lighting Elements	5
3	U.S. Domestic Fleet	6
4	Comparison of Candidates	9-10
5	Ranking Data	11
6	Candidate Systems and Rankings	12
7	Aisle Illumination	12
8	Model Elements	15
9	Total Fleet Cost Summary for Given Type of Installation and Airplane Model	17
10	Total Fleet Cost Summary for Retrofit Program for Self-Illuminated Markers and Signs – System Model 1	19
11	Total Fleet Cost Summary for Retrofit Program for Incandescent Lights and Signs – System Model 2	20
12	Cost Per Airplane of Retrofit Program for Self-Illuminated Markers and Signs – System Model 1	22
13	Cost Per Airplane of Retrofit Program for Incandescent Lights and Signs – System Model 2	23

SUMMARY

This is the final report on the Improved Interior Emergency Lighting Study. The purpose of this study was to formulate a detailed cost analysis of two emergency light and emergency exit sign concepts or systems in commercial transport aircraft for improved passenger evacuation in dense cabin smoke conditions. Eleven emergency lighting systems were initially identified as possible candidate concepts. Of these, two were selected for a detailed cost analysis. Both selected systems are proposed as supplements to the existing emergency lighting system.

These two systems are:

Model 1 – Self-Illuminated Markers and Exit Signs

Model 2 – Incandescent Lights and Self-Illuminated Exit Signs.

Cost estimates were prepared to implement these two concepts during production of new aircraft or during retrofit of existing aircraft. These estimates are summarized in the latter part of Section 2.

The use of the proposed emergency lighting systems in aircraft evacuation should be demonstrated to ensure that they provide a worthwhile improvement in crash survival. Additional studies and testing should be conducted for lighting systems for which data were not available.

SECTION 1
INTRODUCTION

In a survivable passenger aircraft accident, the occupants must evacuate the aircraft rapidly before they are overcome by a postcrash fire. Postcrash fires may occur when large quantities of fuel spill out of the tanks and are ignited. The cabin then becomes filled with dense smoke, and visual recognition of the cabin layout as to aisles, seats, and exits becomes progressively less defined. The physiological effects of oxygen depletion, excessive temperature, toxic gases, and lachrymal effects all work to delay evacuation. Moreover, the evacuation lights and markers may be obscured because of the smoke.

Interior materials with specified fire-retardant characteristics are used in new commercial transport aircraft. Emergency lighting and emergency exiting systems in aircraft have been continuously improved; however, aircraft fires with dense cabin smoke conditions still occur.

Emergency lighting systems in present commercial aircraft are mounted in the upper portion of the passenger cabin, usually in the ceiling. During conditions of dense smoke in the cabin, the light from emergency lights becomes blocked out. Smoke in the cabin rises and stratifies, as illustrated in Figure 1. The smoke is too dense for visible light to penetrate. Lights or markers in the lower part of the cabin can be visible for a greater length of time during a postcrash fire.

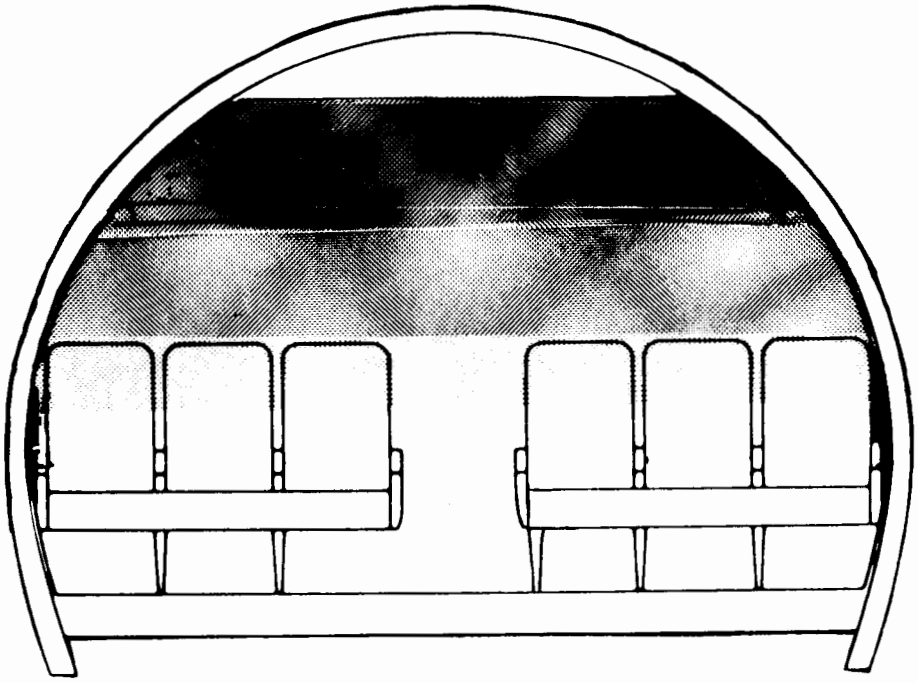

FIGURE 1. SMOKE LAYERING

The design of the emergency lighting and emergency exit systems for commercial aircraft is governed by Federal Air Regulations 25.811, Emergency Exit Marking, and 25.812, Emergency Lighting. Any proposed changes in the existing emergency lighting and emergency exit systems would have to meet these regulations. Copies of FAR 25.811 and FAR 25.812 are reproduced in the Appendix.

METHODOLOGY

This study was conducted to provide an in-depth cost analysis for development of two improved interior emergency lighting and emergency exit systems that would aid passenger evacuation in dense cabin smoke conditions. Modern commercial aircraft are designed for a high level of safety; however, new protective features are assessed by comparing the increased level of safety with the added complexity, weight, and operational constraints.

For each system, the illumination levels achieved along aisles were specified and the amount of hardware necessary to achieve such illumination was also determined. Each system was evaluated as to material cost, weight, installation cost (direct as well as indirect through aircraft downtime), maintenance cost, impact on existing aircraft systems, and feasibility within existing aircraft design and operational constraints.

The costs of each system were broken down into detailed categories including but not limited to cost per fixture, cost for a given aircraft model, weight penalties, and power requirements. The cost aspect considered the following separate situations:

- The cost of the proposed systems against the existing system's cost on aircraft as they are manufactured.
- The cost of retrofit during a scheduled two-year period.
- The cost of retrofit when the work is done during extensive overhaul of an aircraft.

The commercial fleet considered for this study consists of the DC-8, DC-9, DC-10, L-1011, A300, and the Boeing 727, 737, 747, 757, and 767 aircraft.

This report documents the efforts performed for this contracted program. Commercial aircraft emergency lighting systems, the effects of dense smoke in the cabin, and regulations governing emergency lighting systems and exits were analyzed. Two supplemental systems were proposed and a detailed cost analysis was performed.

SECTION 2
DISCUSSION

DATA BASE

The data base was obtained by reviewing Government and industry documents on aircraft emergency lighting in dense smoke conditions (see References 1 to 8).

In present commercial aircraft, most emergency lighting systems are located in the ceiling. They have good operational capabilities except in dense cabin smoke conditions, when visibility is poor. This study analyzed the feasibility of placing the emergency lights in a lower location in order to provide a longer period of passenger awareness of the evacuation route during dense cabin smoke conditions. Possible locations considered were the baggage rack, sidewall, seats, and floor. Four types of lighting systems were considered; incandescent, fluorescent, electroluminescent, and self-illuminated. Tests performed by the Federal Aviation Administration (FAA) demonstrated the following facts:

- Dense smoke in the cabin quickly obscures visibility.
- Lowering exit lights and signs significantly increases their effectiveness in a cabin smoke environment.
- Increasing the luminance of lights and signs provides little increase in the time that they remain visible in dense cabin smoke conditions.

Eleven candidate systems were defined, and are presented in Table 1. Design and performance data were identified for each system, with data from Reference 2 used to approximate visibility time. Emergency lighting data for each aircraft model analyzed in this study are presented in Table 2. In most cases, the particular model of each aircraft type with the most dense seating capacity was chosen. The number and type of aircraft for each airline in the U.S. domestic fleet were determined as shown in Table 3 (Reference 7).

The cost of retrofitting during a two-year period or during an extensive overhaul was studied. Modifications on most aircraft could be completed in two years without removing the aircraft from revenue service. The larger aircraft could be retrofitted within three years. Self-illuminated markers and signs could be provided within a two-year period.

The use of incandescent lights and self-illuminated signs requires a considerable amount of part removal and replacement. This proposed supplemental emergency lighting system could be installed during regular scheduled maintenance and implemented within a three-year period.

TABLE 1

EMERGENCY LIGHTING SYSTEMS

Candidate Systems	Characteristics
1. Baggage Rack New System Bullnose lights Incandescent	Seat light blockage; adds approximately 15 seconds of visibility in dense smoke conditions. Requires new light fixtures, baggage rack modification, and more maintenance; requires baggage rack and emergency lighting recertification.
2. Sidewall lights Adds more lights Incandescent	Seat light blockage; poor aisle illumination; adds approximately 30 seconds of visibility in dense smoke conditions. Requires new light fixtures, batteries, and more maintenance; requires FAA approval.
3. Armrest lights New System Fluorescent	Good aisle illumination; adds approximately 45 seconds of visibility in dense smoke conditions. Requires new fixture, batteries, seats, and more maintenance; major changes. Requires FAA recertification of lights and seats.
4. Armrest lights New System Incandescent	Good aisle illumination; adds approximately 45 seconds of visibility in dense smoke conditions. Requires new fixtures, batteries, and seats, and more maintenance; major changes. Requires FAA recertification of lights and seats.
5. Seat Panel Lights Add more lights Electroluminescent	Additional aisle illumination; adds approximately 45 seconds of visibility in dense smoke conditions. Requires new fixtures, batteries, transformers, and more maintenance; requires FAA approval.
6. Seat Panel Markers Adds to aisle awareness. Self-illuminated	Additional aisle awareness adds approximately 45 seconds of visibility; new markers; requires FAA approval.
7. Seat Frame lights Add more lights Incandescent	Additional aisle illumination; adds approximately 60 seconds of visibility in dense smoke conditions. Needs new fixtures, batteries, and more maintenance; requires FAA approval.
8. Seat Frame and Ceiling Lights New System Incandescent	Provides aisle and ceiling illumination; adds approximately 60 seconds of visibility in dense smoke conditions. Requires new fixture development and verification; major change; requires FAA verification and recertification.

TABLE 1

EMERGENCY LIGHTING SYSTEMS (CONTINUED)

Candidate Systems	Characteristics
9. Floor Strip Lights Add more lights Incandescent	Provides approximately 90 seconds of visibility in dense smoke conditions. Requires new fixtures and more maintenance; light blocked by debris. Requires FAA approval. Requires development test.
10. Floor Lights New System Incandescent	Provides approximately 90 seconds of visibility in dense smoke conditions. Requires new fixtures and more maintenance. Major floor change; requires FAA recertification/verification; light blocked by debris.
11. Floor Lights Adds more lights Electroluminescent	Provides approximately 90 seconds of visibility in dense smoke conditions. Requires new fixtures, transformer; light blocked by debris; requires FAA approval.

TABLE 2

EMERGENCY LIGHTING ELEMENTS

	Aircraft Model									
Item	DC-8	DC-9	DC-10	L-1011	A300	727	737	747	757	767
Aisles	1	1	2	2	2	1	1	2	1	2
Markers, End	16	8	24	28	32	18	4	10	13	12
Markers, Aisle	101	77	166	164	160	62	58	272	87	150
Signs	12	8	8	8	8	9	6	13	10	8
Lights, Seat	46	28	80	92	84	31	28	132	37	70
Lights, Partition	8	6	10	18	12	8	2	23	6	13
Batteries	4	7	4	4	8	4	4	15	4	7
Seats	253	166	345	351	286	164	148	545	224	273
Lamps/Battery	32	5	51	51	14	14	14	14	14	14
Battery Voltage (Volts)	28	2.5	30	30	6	6	6	6	6	6
Battery Cells	22	2	25	25	5	5	5	5	5	5
Lamp Model No.	1437	1315	1829	1829	1810	1810	1810	1810	1810	1810
Lamp Current (Amps)	0.06	1	0.07	0.07	0.4	0.4	0.4	0.4	0.4	0.4
Built-in Test Equipment (BITE) Panel	0	0	1	0	0	0	0	0	0	0

TABLE 3

U.S. DOMESTIC FLEET

AIRPLANE (APL) MODEL	737	727	DC-9	757	DC-8	767	A300	DC-10	L-1011	747	
NO. OF SEATS PER APL	148	164	166	224	253	273	286	345	351	545	
PARTS PER APL*	68/40	89/52	93/49	110/57	129/70	170/98	200/112	198/103	200/122	293/183	TOTAL
AIRLINE											
AIR CAL	15		7								22
AIR FLORIDA	34	5		3				4			46
ALASKA AIR	3	10									13
ALOHA	12										12
AMERICAN		180	20			30		34		8	272
ARROW					3						3
BRANIFF		65			8					7	80
CAPITOL AIR					12			3			15
CONTINENTAL		58						13			71
DELTA	33	129	36	60	13	20			44		335
EASTERN		125	79	27			34		29		294
FRONTIER	50		3								53
HAWAIIAN			8								8
JET AMERICA			3								3
METRO INTERNATIONAL										3	3
MIDWAY			15								15
MUSE			8								8
NEW YORK AIR			13								13
NORTHWEST		60						22		24	106
OZARK			42								42
PSA		12	27								39
PAA		60						15	12	39	126
PEOPLES EXP	17										17
PIEDMONT	61	11									72
REPUBLIC		16	138								154
SOUTHWEST	49										49
SUMMIT			1								1
TEXAS INTERNATIONAL			40								40
TRANS AMERICA					8					3	11
TWA		82				10			33	18	143
UNITED	49	142			30	39		47		18	325
U.S. AIR	25	16	71								112
WESTERN	13	47				6		10			76
WIEN	8	5			1						14
WORLD					4			8		2	14
TOTAL	369	1,023	511	90	79	105	34	156	118	122	2,607

*SELF-ILLUMINATED MARKERS AND SIGNS/INCANDESCENT LIGHTS AND SIGNS

There would be some cost differential but it was not considered significant; therefore, cost data for the retrofit condition presented at the end of Section 2 would apply to both the two-year retrofit and retrofit during major overhaul.

CONCEPTS AND ANALYSIS

A review and analysis of the previously assembled data base for emergency lighting in dense smoke conditions revealed four categories of lighting systems. These lighting categories and locations are:

- Incandescent
  - Baggage Rack Bullnose
  - Sidewall
  - Aisle Seat Frame
  - Aisle Seat Armrest
  - Aisle Seat Frame and Ceiling
  - Floor Strips
  - Floor
- Fluorescent
  - Aisle Seat Armrest
- Electroluminescent
  - Aisle Seat Panel
  - Floor
- Self-Illuminated
  - Aisle Seat Frame

The two concepts chosen as candidates for cost analysis are further defined in this section.

Cost, installation, and other parameters listed in this section were used to evaluate the degree of merit of various concepts for improving emergency lighting in dense cabin smoke. For each design or conceptual alternative, these parameters are assigned a zero or unit value depending

on its comparative merit. This process was based on engineering experience and judgment. These parameters were combined into a single number which expressed the merit of the design. The best design among competing alternatives produced the largest merit value. A list of parameters and their application follows:

Parameters	Application
Cost	Material and design
Installation	Difficulty, labor cost, elapsed time
Illumination	Ability of passenger to be guided along exit route during layered smoke
Maintainability	Service checking frequency and accessibility to serviced parts
Regulation	Degree of difficulty in achieving certification
Weight	Increase in the operational cost to the fleet
Safety	Probability of lighting system parts causing injury to passenger or initiating airframe damage
Reliability	Likelihood of system availability during the emergency smoke condition or frequency of verification of checkout to assure a satisfactory system reliability rate and common failure modes

A statistical evaluation of the 11 proposed candidate lighting systems was performed using the above parameters. Weights were assigned by comparing each candidate system with all others for each parameter, and assigning a value of one to whichever candidate was picked to be the more feasible of any two being considered (see Table 4). The number of ones that each candidate system received for each parameter were summed and recorded. Then, the total number of ones that each candidate system received for all eight parameters were summed and are shown in Table 5. The candidate systems were ranked in order, with the candidate system having the largest number assigned the highest ranking. This approach makes available formalized and quantifiable judgments. It also makes decision biases visible and available for review.

The 11 candidate emergency lighting systems and their ranking are shown in Table 6. Candidate systems ranked 5, 6, 7, 10, and 11 are complete systems. The other candidates supplement the existing emergency light system.

TABLE 4

COMPARISON OF CANDIDATES

	CANDIDATE	PARAMETER CRITERIA	CHOICE	TOTAL
1	Bag Rack	COST	0 1 1 1 0 0 0 0 1 0	4
2	Sidewall		1 1 1 1 1 0 1 1 1 1	9
3	Armrest F		0 0 0 0 0 0 1 0	1
4	Armrest I		0 0 0 0 0 0 1 0	2
5	Seat EI		0 0 1 0 1 0	4
6	Seat I		0 1 0 1 1	7
7	Seat S-I		1 1 1 1	10
8	Seat/Ceiling		0 1 0	4
9	Floor I-S		1 1	8
10	Floor I		0 0 0 0 0	0
11	Floor EI		1 0 1	6
1	Bag Rack	WEIGHT	1 1 1 1 1 0 1 1 1 1	9
2	Sidewall		1 1 1 1 1 0 1 1 1 1	8
3	Armrest F		0 0 0 0 0 0 0 0	0
4	Armrest I		1 0 0 1 0 0 0	3
5	Seat EI		0 0 0 0 0 0	1
6	Seat I		0 0 0 1 1	5
7	Seat S-I		1 1 1 1	10
8	Seat/Ceiling		1 1 1	6
9	Floor I-S		1 1	6
10	Floor I		1	4
11	Floor EI		0 0	3
1	Bag Rack	SAFETY	0 1 1 0 0 0 0 1 0 1	4
2	Sidewall		1 1 1 1 1 1 1 1 1 1	10
3	Armrest F		1 0 0 0 0 1 1 1	4
4	Armrest I		0 0 0 0 1 0 1	2
5	Seat EI		0 0 1 1 0 1	6
6	Seat I		0 1 1 0 1	7
7	Seat S-I		1 1 1 1	9
8	Seat/Ceiling		1 0 1	5
9	Floor I-S		0 1	1
10	Floor I		1 1 1	7
11	Floor EI		0 0	0
1	Bag Rack	RELIABILITY	0 1 1 1 0 0 0 1 0 1	5
2	Sidewall		1 1 1 1 0 1 1 1 1	9
3	Armrest F		0 0 0 0 0 0 0 0	0
4	Armrest I		1 0 0 0 1 0 1	4
5	Seat EI		0 0 0 0 0 1	2
6	Seat I		0 1 1 0 1	7
7	Seat S-I		1 1 1 1	10
8	Seat/Ceiling		1 0 1	6
9	Floor I-S		0 1	3
10	Floor I		1 1 1	8
11	Floor EI		0 0	1

F = Fluorescent, I = Incandescent, EI - Electroluminescent, S-I = Self-Illuminated, I-S = Incandescent-Strip

TABLE 4

COMPARISON OF CANDIDATES (CONTINUED)

	CANDIDATE	PARAMETER CRITERIA	CHOICE	TOTAL
1	Bag Rack	MAINTAINABILITY	0 1 1 1 1 0 1 1 1 1	8
2	Sidewall		1 1 1 1 1 0 1 1 1 1	9
3	Armrest F		0 0 0 1 0 0 0 1 0 1	3
4	Armrest I		0 0 1 1 0 0 0 1 0 1	4
5	Seat EI		0 0 0 0 0 0 1 1 0 1	3
6	Seat I		0 0 1 1 1 0 1 1 1 1	7
7	Seat S-I		1 1 1 1 1 1 1 1 1 1	10
8	Seat/Ceiling		0 0 1 0 0 0 0 1 1 1	5
9	Floor I-S		0 0 0 0 0 0 0 0 0 1	1
10	Floor I		0 0 1 1 1 0 0 0 1 1	5
11	Floor EI		0 0 0 0 0 0 0 0 0 0	0
1	Bag Rack	FAA REGULATION	0 0 0 0 0 0 0 0 1 0	1
2	Sidewall		1 1 1 0 0 1 1 0 1 0	5
3	Armrest F		1 0 0 0 0 0 0 0 1 0	2
4	Armrest I		1 0 0 0 0 0 0 0 0 0	1
5	Seat EI		1 1 1 1 0 1 1 0 1 0	7
6	Seat I		1 1 1 1 1 1 1 1 1 1	10
7	Seat S-I		1 0 1 1 0 0 0 0 0 0	3
8	Seat/Ceiling		1 0 1 1 0 0 1 0 1 0	5
9	Floor I-S		1 1 1 1 1 0 1 1 1 1	7
10	Floor I		0 0 0 1 0 0 1 0 0 0	2
11	Floor EI		1 1 1 1 1 0 1 1 0 1	8
1	Bag Rack	ILLUMINATION	1 0 0 0 0 0 0 0 0 0	1
2	Sidewall		0 0 0 0 0 0 0 0 0 0	0
3	Armrest F		1 1 0 1 0 1 1 0 0 0	5
4	Armrest I		1 1 0 1 0 1 0 0 0 0	4
5	Seat EI		1 1 0 0 0 1 0 0 0 0	3
6	Seat I		1 1 1 1 1 1 1 0 0 0	7
7	Seat S-I		1 1 0 0 0 0 0 0 0 0	2
8	Seat/Ceiling		1 1 0 1 1 0 1 0 0 0	5
9	Floor I-S		1 1 1 1 1 1 1 1 0 1	9
10	Floor I		1 1 1 1 1 1 1 1 1 1	10
11	Floor EI		1 1 1 1 1 1 1 1 0 0	8
1	Bag Rack	INSTALLATION	0 1 1 0 0 0 1 0 1 0	4
2	Sidewall		1 1 1 1 1 0 1 0 1 1	8
3	Armrest F		0 0 0 0 0 0 0 0 1 0	1
4	Armrest I		0 0 1 0 0 0 0 0 1 0	2
5	Seat EI		1 0 1 1 0 0 1 0 1 0	5
6	Seat I		1 0 1 1 1 0 1 0 1 1	7
7	Seat S-I		1 1 1 1 1 1 1 1 1 1	10
8	Seat/Ceiling		0 0 1 1 0 0 0 0 1 0	3
9	Floor I-S		1 1 1 1 1 1 0 1 1 1	9
10	Floor I		0 0 0 0 0 0 0 0 0 0	0
11	Floor EI		1 0 1 1 1 0 0 1 0 1	6

F = Fluorescent, I = Incandescent, EI - Electroluminescent, S-I = Self-Illuminated, I-S = Incandescent-Strip

TABLE 5
RANKING DATA

Candidate/Rank	COST	WEIGHT	SAFETY	RELIABILITY	MAINTAINABILITY	FAA REGULATION	ILLUMINATION	INSTALLATION	Total
1 Seat Self-Illuminated	10	10	9	10	10	3	2	10	64
2 Seat Incandescent	7	5	7	7	7	10	7	7	57
3 Sidewall Incandescent	9	8	10	9	9	5	0	8	58
4 Floor Strip	8	6	1	3	1	9	9	9	46
5 Seat/Ceiling	4	6	5	6	5	5	5	3	39
6 Baggage Rack	4	9	4	5	8	1	1	4	36
7 Floor Incandescent	0	4	7	8	5	2	10	0	36
8 Floor Electroluminescent	6	3	0	1	0	8	8	6	34
9 Seat Electroluminescent	4	1	6	2	3	7	3	5	31
10 Armrest Incandescent	2	3	2	4	4	1	4	2	22
11 Armrest Fluorescent	1	0	4	0	3	2	5	1	16

NOTE: Although the total for the seat incandescent system was one unit lower than the sidewall system, the seat system was ranked higher as it provides more aisle illumination. Another system that should be considered for future consideration is floor strip lighting. Insufficient test data lowered its rating.

TABLE 6

CANDIDATE SYSTEMS AND RANKINGS

Rank	Systems	Complete System	Supplemental System
1	Aisle Seat Frame - Self-Illuminated		X
2	Aisle Seat Frame - Incandescent		X
3	Sidewall - Incandescent		X
4	Floor - Incandescent Strips		X
5	Aisle Seat Frame and Ceiling	X	
6	Floor - Incandescent	X	
7	Baggage Rack Bullnose - Incandescent	X	
8	Floor - Electroluminescent		X
9	Aisle Seat Panel - Electroluminescent		X
10	Aisle Seat Armrest - Incandescent	X	
11	Aisle Seat Armrest - Fluorescent	X	

TABLE 7

AISLE ILLUMINATION

Reading	Foot-Candle
1	0.854
2	0.324
3	1.028
4	0.368
5	0.942
6	0.303
7	1.180
8	0.310

Note: The lamp voltage was 26.24 V and the measurements were made 16.5 inches apart at floor level in the center of the aisle. The average illumination was 0.663 foot-candle. For a 1.83 lamp voltage, the average illumination would be 0.299 foot-candle.

SYSTEM DEFINITION

The emergency lighting system definition included the description of two models. Each model consists of the elements needed to provide a longer passenger awareness period of the evacuation route and exit during dense cabin smoke conditions. A review of emergency lighting systems and the effects of dense smoke in the cabin revealed subsystems that deserved further investigation. Eleven subsystems were defined and ranked according to feasibility and effectiveness. The following two subsystems were selected for detailed cost analysis:

1. Self-illuminated markers on each aisle seat and self-illuminated signs beside each exit.
2. Incandescent lights under each aisle seat, on one side of the aisle, and self-illuminated signs beside each exit.

Both of these systems supplement the existing emergency lighting system. The increased illumination provided by the markers and signs is negligible, but awareness of the escape route is sufficient to aid the passenger during evacuation in dense cabin smoke conditions. The incandescent lights, mounted under the seats, provide a significant amount of illumination, and when measured at floor level, the readings exceed FAR requirements (see Table 7). These lights would illuminate an escape route in dense cabin smoke conditions for a significant length of time.

Technical Description of System Model 1

The self-illuminated marker and exit sign concept was defined as System Model 1 and is shown in Figure 2. This system features a marker on the side of each aisle seat; on the fore or aft sides

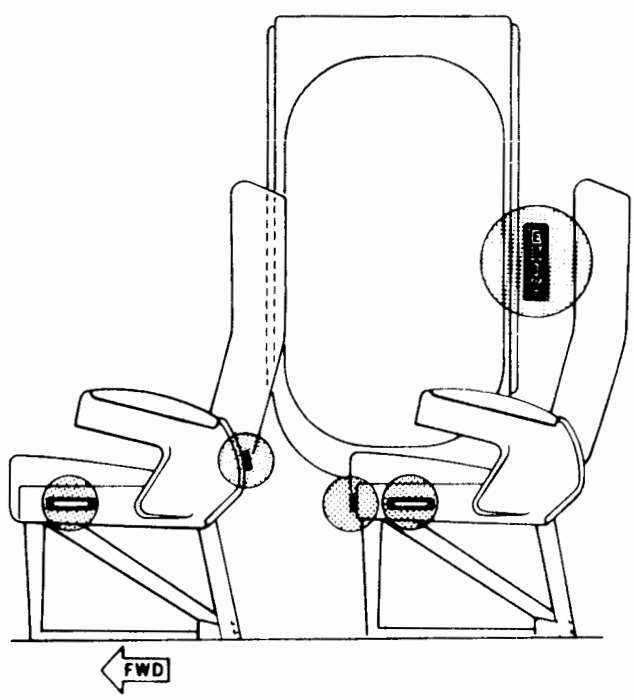

FIGURE 2. SYSTEM MODEL 1

of the aisle seats at each exit; and on the aisle side of each galley, lavatory, and divider. Exit signs were located midway down and to the side of each emergency exit. The parameters for the self-illuminated markers and exit signs are shown in Table 8. The markers were mounted so that they were visible to the passenger in the aisle. Bonding was used to attach the markers to the seat panel. Use of mounting holes in the seat was not considered to avoid recertifying the seat. The exit signs were attached by bonding. The total weight added by the System Model 1 configuration was approximately 10 pounds for the DC-9 and 18 pounds for the DC-10. The half-life of the markers and signs is 7 to 8 years; therefore, the operation and maintenance costs would be small.

System Model 1 is considered feasible within aircraft design and operational constraints although evacuation demonstrations are needed to determine the total number of markers required and their effect in dense cabin smoke conditions. The operational impact of implementing these on existing aircraft systems would be minimal.

Technical Description of System Model 2

The incandescent lights and self-illuminated exit sign concept shown in Figure 3 was defined as System Model 2. This system consists of electric light fixtures under the aisle seat and self-illuminated exit signs located midway down and to the side of each emergency exit. Additional elements of the incandescent lighting system include batteries, circuit breakers, built-in test equipment (BITE), and wiring. On single-aisle aircraft, either aisle seat could be used. On dual-aisle aircraft, the seat on the outboard side of the aisle was used. The batteries were mounted above the baggage racks or in lower cargo areas and the wiring run along the sidewalls and under the seats. The parameters for the incandescent lights, other electrical elements, and self-illuminated exit signs are shown in Table 8. The total weight added by the System Model 2 configuration was approximately 40 pounds for the DC-9 and 85 pounds for the DC-10. The operation and maintenance costs are similar to the existing emergency lighting operation and maintenance costs.

System Model 2 is considered feasible within aircraft design and operation constraints but is more costly than System Model 1. Evacuation demonstrations in dense smoke conditions could be used to establish the number of lights required. FAR 25.811 and FAR 25.812 may require changes in test method. The impact of implementing these on operation and maintenance of existing aircraft would be significant, and would be similar to the existing emergency light system.

COST ANALYSIS

The cost analysis section contains the cost data generated to assess the economics of proposed concepts for improved interior emergency lighting and emergency exit and locator signs in

TABLE 8
MODEL ELEMENTS

ITEM	QUANTITY DC-9	QUANTITY DC-10	WEIGHT (Grams)	COST (Dollars)	REMARKS
Emergency	7		908 (DC-9)	270 (DC-9)	Grimes, P/N 60-9394-31
Battery Packs		4	3,178 (DC-10)	2,600 (DC-10)	Gulton, P/N EMS 139-2
Lights					
Underseat	28	80	50	50	Luminator, P/N L-20191
Galley-Lav	6	10	50	50	Luminator, P/N L-20196
Exit Signs	8	8	150	115	Safety Light Corp., P/N 604-TBD
Markers					Safety Light Corp., P/N 758-TBD, 758-TBD
Seat Side	75	132	32	40	Safety Light Corp., P/N 758-TBD
Seat End	9	24	32	30	Safety Light Corp., P/N 758-TBD
BITE Panel		1	908	-	Revise to accommodate 8 Batteries
Other Elements			5,630 (DC-9) 17,360 (DC-10)	-	Extruded polycarbonate ducting, wire, etc.

Brackets to be bonded to seat structure; wiring to be routed in passenger cable raceway bonded to seat frame. Raceway made by Electronical Engineers Company.

FAA WJH Technical Center
00093451

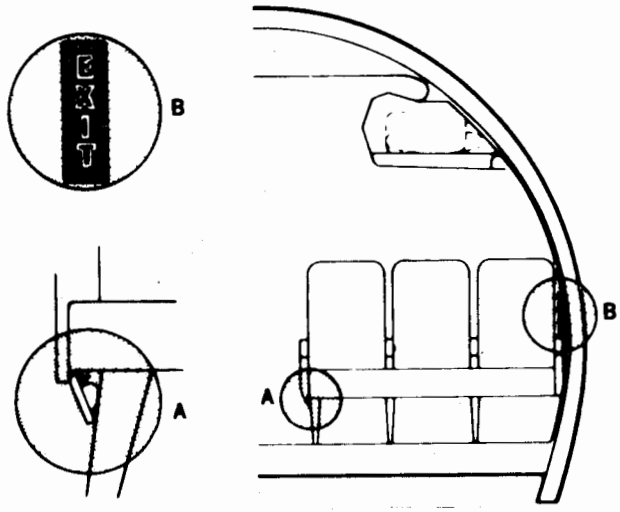

FIGURE 3. SYSTEM MODEL 2

transport aircraft. It includes the approach used to derive the costs and the results and the methodology. With respect to cost, emphasis was placed on the two most viable approaches to an intelligent solution of the problem. Accordingly, the program funding for this study effort was used to provide the decision-making levels with the most credible set of cost data. However, it should be noted that the primary concern is directed at a comparative analysis and, therefore, imprecision in the costs should be expected.

Specific categories of cost were identified, quantified, and evaluated. In the process, it was determined that flexibility in estimating was essential to allow for either a retrofit case or a production case involving new aircraft. A conventional estimating process was used which basically involves extrapolations from a historical data base, and specific attention was given to any unique characteristics of a concept in order to maximize the discrete estimating approach.

An acquisition cost structure was formulated to identify the significant functional elements to be quantified and thus provide a contribution to the concept evaluation process. Emphasis was placed on the development of reasonable and relative costs for the selected concepts instead of absolute values. The cost data are also limited to the extent of the technical knowledge and understanding available regarding the design and installation associated with each approach. Therefore, cost data were generated consistent with these technical definitions and characteristics.

The acquisition cost data are reported by the major resource categories of nonrecurring engineering and recurring or production. In generating the costs, these major categories were broken down further into functional elements which covered all categories of labor, raw materials, and purchased parts. The design, or nonrecurring engineering effort, was assumed to be accomplished by a major airframe manufacturer. Installation in the newly constructed aircraft was also considered to be within the purview of the airframe manufacturer. On the other hand, the retrofit efforts were estimated as an airline function. Cost factors vary between the two.

The dominant acquisition costs and complexities of the incandescent lighting concept provide ample insight into conclusions reached on the operating and maintenance costs. The acquisition cost was derived for evaluation purposes and was used as the cost criterion for economic comparisons between the candidate approaches. The operating and maintenance costs are considered to be 10 percent per year of the implementation costs for each model.

It is advisable to understand the basis for the costs contained in this section and the ground rules from which they were structured. While it is customary to compare costs with prior results and/or competing concepts, it also follows that any such comparison be accomplished with meticulous attention to the basis of the estimates.

Results

Cost Summary – Cost data for the selected concepts were derived for 10 models of commercial transports distributed over 35 domestic airlines. This distribution, given in Table 3, was structured to show aircraft sizing by the available number of seats. The total number of parts required for each concept is also provided in this table.

The acquisition costs and weight required to incorporate each concept are summarized in Table 9. The summaries are given by model of airplane, concept, and retrofit installation.

TABLE 9

TOTAL FLEET COST SUMMARY AND ADDED WEIGHT PER AIRPLANE
(COST IN CONSTANT 1983 DOLLARS – MILLIONS, WEIGHT IN POUNDS)

		LIGHTS AND SIGNS		MARKERS AND SIGNS	
AIRPLANE MODEL	AIRPLANE QUANTITY	TOTAL COST	WEIGHT (PER APL)	COST	WEIGHT (PER APL)
		(Model 2)		(Model 1)	
737	369	9.693	37	2.078	7
727	1,023	24.099	41	5.520	10
DC-9	511	13.071	40	2.822	10
757	90	2.959	45	0.623	15
DC-8	79	3.736	64	0.663	14
767	105	5.483	78	1.005	16
A300	34	1.797	90	0.354	18
DC-10	156	8.918	85	1.747	18
L-1011	118	6.450	92	1.298	18
747	122	12.850	152	2.128	27
TOTAL	2,607	89.056		18.238	

Figures 4 and 5 display how total cumulative costs vary with the quantity produced. These types of curves were developed for each model evaluated and still in production. With these curves, it was possible to obtain the total cost to produce any given quantity of airplanes for each concept and model.

It is apparent that the lowest cost approach is the one incorporating the self-illuminated markers and signs. In this concept, the cost is only about 20 percent of the incandescent lights and signs. The cost of the retrofit installation case for each concept is higher than the production case. The cost difference between production and retrofit for the markers and signs on the various airplanes is not as large as the difference associated with the lights and signs – about $2 million versus $14 million.

Detailed Cost by Airline – The retrofit cost data provided in Table 9 are presented in greater detail in Tables 10 and 11. These sets of data provide the cost summary by airline, airplane model, and candidate model for the retrofit case only. It should be noted that each airline is considered to have its work accomplished independent of the size of the total fleet. Therefore, learning is not a significant factor.

It is not necessary to provide a detailed breakdown for the production case by model for each airline, since the work would be accomplished at the airplane manufacturer's plant and the cost per model would be the same for each airline.

Unit Cost Values – The cost data provided in Tables 10 and 11 (total fleet costs for each concept, model, and airline for the retrofit case) are translated into unit cost values per airplane as they pertain to each individual airline. The results are shown in Tables 12 and 13. This is accomplished by simply dividing the total costs in Tables 10 and 11 by the airplane quantities given in Table 3. It is apparent that the driving factor on a unit basis in the retrofit case is the aircraft size. As a matter of reference, the average unit value per airplane for the production and total quantities by model are shown in Figures 4 and 5.

Approach

The acquisition costs were derived for evaluation purposes and used as the cost criterion for the cost-effectiveness analyses in making economic comparisons. A synopsis of the Douglas approach is given below.

1. All applicable and identifiable elements of cost that comprise the acquisition structure and are deemed significant and available to the analyses were identified, classified, and delineated.
2. Basic ground rules, assumptions, constraints, and guidelines were identified.

TABLE 10

TOTAL FLEET COST SUMMARY FOR RETROFIT PROGRAM FOR SELF-ILLUMINATED MARKERS AND SIGNS - SYSTEM MODEL 1
(CONSTANT 1983 DOLLARS)

AIRPLANE MODEL	737	727	DC-9	757	DC-8	767	A300	DC-10	L-1011	747	
NO. OF SEATS PER APL	148	164	166	224	253	273	286	345	351	545	
PARTS PER APL	68	89	93	110	129	170	200	198	200	293	TOTAL
AIRLINE											
AIR CAL	88,395		43,388								131,783
AIR FLORIDA	191,284	32,030		24,603				49,651			297,568
ALASKA AIR	19,842	60,620									80,462
ALOHA	71,820										71,820
AMERICAN		944,640	115,841			283,830		372,546		146,872	1,863,729
ARROW					27,978						27,978
BRANIFF		354,510			69,256					129,724	553,490
CAPITOL AIR					101,268			38,027			139,295
CONTINENTAL		318,246						149,704			467,950
DELTA	185,988	682,926	201,865	407,460	108,992	193,460			476,696		2,257,387
EASTERN		661,000	426,548	190,647			353,872		320,653		1,952,720
FRONTIER	276,250		19,842								296,092
HAWAIIAN			49,123								49,123
JET AMERICA			19,842								19,842
METRO INTERNATIONAL										59,328	59,328
MIDWAY			88,396								88,396
MUSE			49,123								49,123
NEW YORK AIR			77,298								77,298
NORTHWEST		328,620						246,256		411,624	986,500
OZARK			233,654								233,654
PSA		71,820	153,746								225,566
PAA		328,620						171,356	138,900	651,261	1,290,137
PEOPLES EXP	99,501										99,501
PIEDMONT	333,853	66,264									400,117
REPUBLIC		93,968	727,920								821,888
SOUTHWEST	270,970										270,970
SUMMIT			7,304								7,304
TEXAS INTERNATIONAL			223,081								223,081
TRANS AMERICA					69,256					59,328	128,584
TWA		442,226				101,240			362,241	313,884	1,219,591
UNITED	270,970	748,624			239,640	363,753		507,485		313,884	2,444,356
U.S. AIR	143,050	93,968	385,193								622,211
WESTERN	77,298	260,333				63,144		116,930			517,705
WIEN	49,120	32,030			10,299						91,449
WORLD					36,716			94,826		41,614	173,156
TOTAL	2,078,341	5,520,445	2,822,164	622,710	663,405	1,005,427	353,872	1,746,781	1,298,490	2,127,519	18,239,154

TABLE 11

TOTAL FLEET COST SUMMARY FOR RETROFIT PROGRAM FOR INCANDESCENT LIGHTS AND SIGNS - SYSTEM MODEL 2
(CONSTANT 1983 DOLLARS)

AIRPLANE MODEL	737	727	DC-9	757	DC-8	767	A300	DC-10	L-1011	747	
NO. OF SEATS PER APL	148	164	166	224	253	273	286	345	351	545	
PARTS PER APL	40	52	49	57	70	98	112	103	122	183	TOTAL
AIRLINE											
AIR CAL	455,250		256,206								711,456
AIR FLORIDA	889,440	199,815		161,166				291,437			1,541,858
ALASKA AIR	124,773	343,500									468,273
ALOHA	381,096										381,096
AMERICAN		3,802,500	599,052			1,505,940		1,837,633		980,232	8,725,357
ARROW					188,460						188,460
BRANIFF		1,589,445			413,184					881,349	2,883,978
CAPITOL AIR					575,604			228,776			804,380
CONTINENTAL		1,450,000						796,907			2,246,907
DELTA	868,329	2,820,843	969,505	1,848,420	611,611	1,078,300			2,309,076		10,506,084
EASTERN		2,750,000	1,858,961	949,698			1,797,410		1,603,904		8,959,972
FRONTIER	1,230,050		129,973								1,360,023
HAWAIIAN			284,950								284,950
JET AMERICA			129,973								129,973
METRO INTERNATIONAL										447,105	447,105
MIDWAY			474,220								474,220
MUSE			284,950								284,950
NEW YORK AIR			421,793								421,793
NORTHWEST		1,490,640						1,255,537		2,398,032	5,144,209
OZARK			1,102,534								1,102,534
PSA		396,972	765,884								1,162,856
PAA		1,490,640						901,376	744,984	3,567,447	6,704,447
PEOPLES EXP	505,104										505,104
PIEDMONT	1,450,275	370,865									1,821,140
REPUBLIC		500,528	2,976,236								3,476,764
SOUTHWEST	1,209,124										1,209,124
SUMMIT			54,580								54,580
TEXAS INTERNATIONAL			1,059,097								1,059,097
TRANS AMERICA					413,184					447,105	860,289
TWA		1,921,342				618,300			1,791,900	1,895,868	6,227,410
UNITED	1,209,124	3,056,550			1,213,140	1,866,696		2,444,388		1,895,868	11,685,766
U.S. AIR	691,650	500,528	1,702,892								2,895,070
WESTERN	404,924	1,215,420				413,448		636,425			2,670,217
WIEN	273,552	199,815			79,141						552,508
WORLD					241,528			525,458		336,790	1,103,776
TOTAL	9,692,691	24,099,403	13,070,806	2,959,284	3,735,852	5,482,684	1,797,410	8,917,937	6,449,863	12,849,796	89,055,726

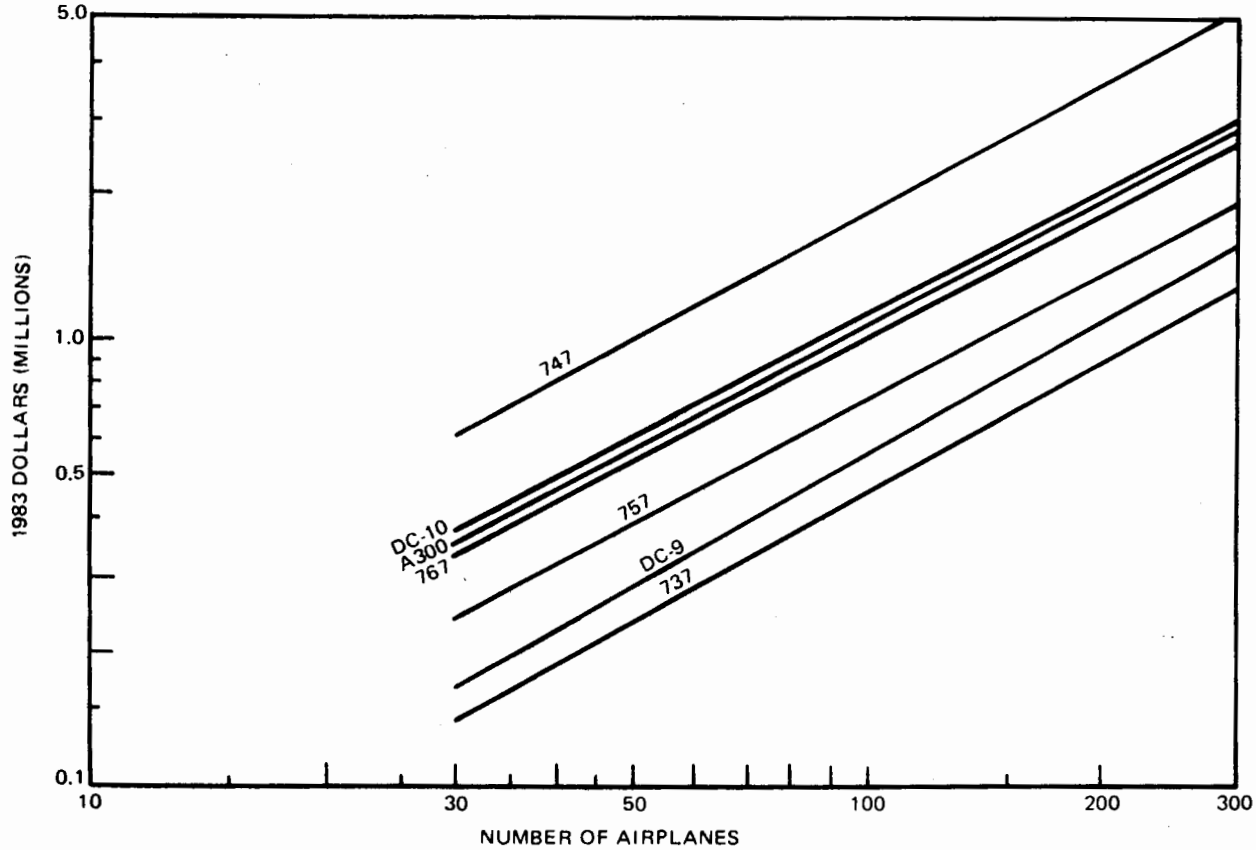

FIGURE 4. CUMULATIVE COST FOR SYSTEM MODEL 1 (MARKER AND SIGNS) PRODUCTION

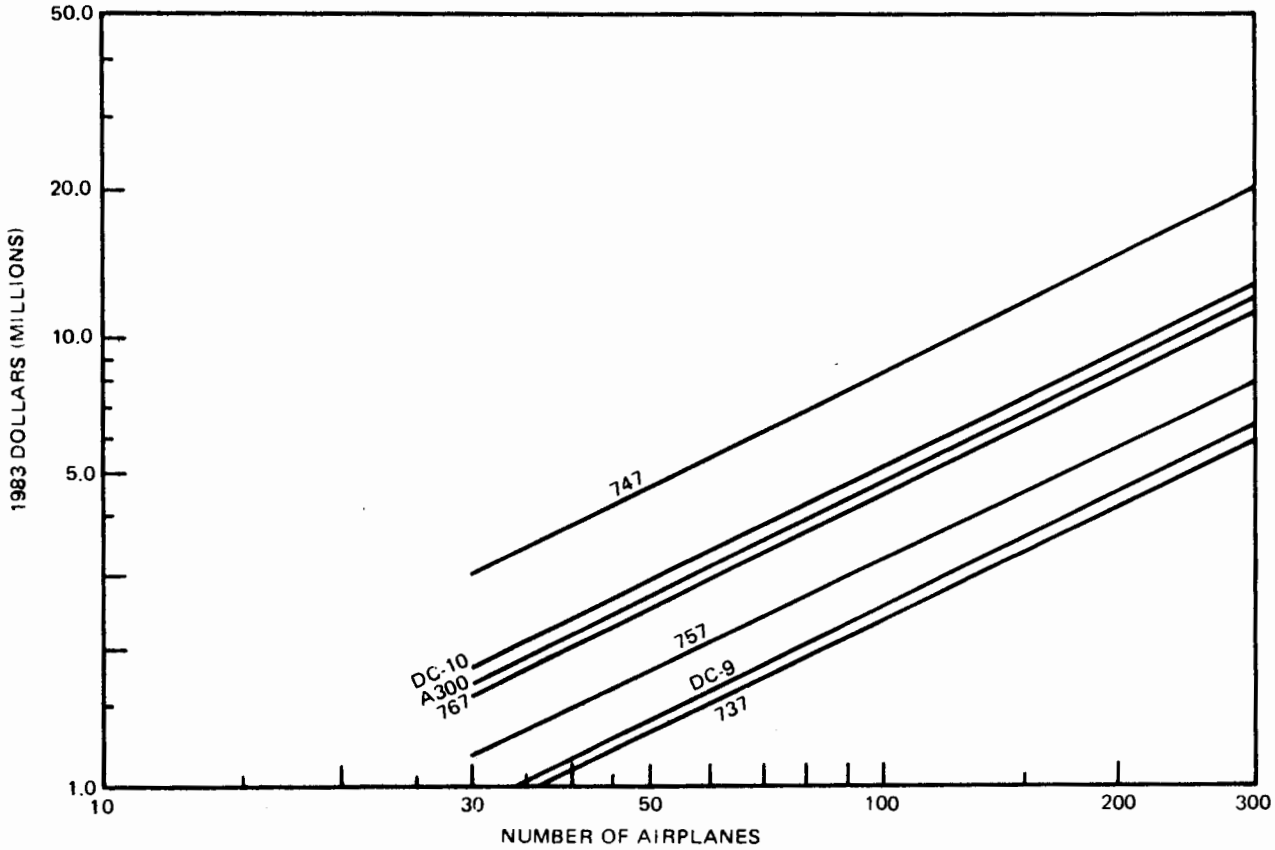

FIGURE 5. CUMULATIVE COST FOR SYSTEM MODEL 2 (LIGHTS AND SIGNS) PRODUCTION

TABLE 12

COST PER AIRPLANE OF RETROFIT PROGRAM FOR SELF-ILLUMINATED MARKERS AND SIGNS - SYSTEM MODEL 1 (CONSTANT 1983 DOLLARS)

AIRPLANE MODEL	737	727	DC-9	757	DC-8	767	A300	DC-10	L-1011	747
NO. OF SEATS PER APL	148	164	166	224	253	273	286	345	351	545
PARTS PER APL	68	89	93	110	129	170	200	198	200	293
AIRLINE										
AIR CAL	5,893		6,198							
AIR FLORIDA	5,626	6,406		8,201				12,413		
ALASKA AIR	6,614	6,062								
ALOHA	5,985									
AMERICAN		5,248	5,792			9,461		10,957		18,359
ARROW					9,326					
BRANIFF		5,454			8,657					18,532
CAPITOL AIR					8,439			12,676		
CONTINENTAL		5,487						11,516		
DELTA	5,636	5,294	5,607	6,791	8,384	9,673			10,834	
EASTERN		5,288	5,399	7,061			10,408		11,057	
FRONTIER	5,525		6,614							
HAWAIIAN			6,140							
JET AMERICA			6,614							
METRO INTERNATIONAL										19,776
MIDWAY			5,893							
MUSE			6,140							
NEW YORK AIR			5,946							
NORTHWEST		5,477						11,193		17,151
OZARK			5,563							
PSA		5,985	5,694							
PAA		5,477						11,424	11,575	16,699
PEOPLES EXP	5,853									
PIEDMONT	5,473	6,024								
REPUBLIC		5,873	5,275							
SOUTHWEST	5,530									
SUMMIT			7,304							
TEXAS INTERNATIONAL			5,577							
TRANS AMERICA					8,657					19,776
TWA		5,393				10,124			10,977	17,438
UNITED	5,530	5,272			7,988	9,327		10,798		17,438
U.S. AIR	5,722	5,873	5,425							
WESTERN	5,946	5,539				10,524		11,693		
WIEN	6,140	6,406			10,299					
WORLD					9,179			11,853		20,807

TABLE 13

COST PER AIRPLANE OF RETROFIT PROGRAM FOR INCANDESCENT LIGHTS AND SIGNS - SYSTEM MODEL 2
(CONSTANT 1983 DOLLARS)

AIRPLANE MODEL	737	727	DC-9	757	DC-8	767	A300	DC-10	L-1011	747
NO. OF SEATS PER APL	148	164	166	224	253	273	286	345	351	545
PARTS PER APL	40	52	49	57	70	98	112	103	122	183
AIRLINE										
AIR CAL	30,350		36,601							
AIR FLORIDA	26,160	39,963		53,772				72,859		
ALASKA AIR	41,591	34,350								
ALOHA	31,758									
AMERICAN		21,125	29,953			50,198		54,048		122,529
ARROW					62,820					
BRANIFF		24,453			51,648					125,907
CAPITOL AIR					47,967			76,259		
CONTINENTAL		25,000						61,301		
DELTA	26,313	21,867	26,931	30,807	47,047	53,915			52,479	
EASTERN		22,000	23,531	35,174			52,865		55,307	
FRONTIER	24,601		43,324							
HAWAIIAN			35,619							
JET AMERICA			43,324							
METRO INTERNATIONAL										149,035
MIDWAY			31,615							
MUSE			35,619							
NEW YORK AIR			32,446							
NORTHWEST		24,844						57,070		99,918
OZARK			26,251							
PSA		33,081	28,366							
PAA		24,844						60,092	62,082	91,473
PEOPLES EXP	29,712									
PIEDMONT	23,775	33,715								
REPUBLIC		31,283	21,567							
SOUTHWEST	24,676									
SUMMIT			54,580							
TEXAS INTERNATIONAL			26,477							
TRANS AMERICA					51,648					149,035
TWA		23,431				61,830			54,300	105,326
UNITED	24,676	21,525			40,438	47,864		52,008		105,326
U.S. AIR	27,666	31,283	23,984							
WESTERN	31,148	25,860				68,908		63,643		
WIEN	34,194	39,963			79,141					
WORLD					60,382			65,682		168,395

3. Douglas' experience and historical data on analogous concepts were applied to the maximum extent possible.

4. Cost elements were quantified through application of proven factors. An existing data bank and the factors were used to obtain vendor historical quotes.

5. Individual cost elements were summed to the major level of the cost categories established and measurable at this time and documented.

The primary approach used to derive the acquisition costs is known as the discrete estimating technique. This involved identifying the sequence of operations for the nonrecurring and recurring elements of labor and the raw materials and purchased parts required for each concept and each type of installation (retrofit or production) for the DC-9 and DC-10 as the two baselines. The elements of labor identified were engineering design, sustaining engineering, planning, manufacturing, and inspection. A fee or profit was included as an element of the cost buildup to the price level. Labor hours were converted into dollars by applying a composite rate which included the direct labor man-hour cost, overhead, general and accounting, and other direct or miscellaneous charges. However, the rate varied between the airline doing the retrofit and the airplane manufacturer accomplishing the work on-line.

Work done in manufacturing was subjected to the benefits of the progress improvement curve. At the airline level, this was not as significant because of the quantities and times at which the effort would be accomplished.

In determining estimates for the production case, different quantities were considered; i.e., 30, 300, 400, and 1,000 airplanes. A curve was developed for each aircraft model, from which it was possible to select a cost for a given airplane quantity for an airline.

All basic cost data (labor hours, materials, etc.) were eventually translated into a cost per seat and cost per part factor. These factors formed the basis for developing the estimates for all models exclusive of the two baselines. This was accomplished by developing a linear correlation of the number of parts versus the number of seats for each model (all 10 airplanes). The resulting line of regression had a standard error of estimate of ± 16.371 and a coefficient of correlation of 0.968 for the concept of self-illuminated markers and signs. In the concept for the incandescent lights and signs, the standard error of estimate was ± 9.705 and the coefficient of correlation of 0.946.

Ground Rules and Assumptions

Ground rules were prepared and assumptions made in developing the costs as well as to serve as guidelines for understanding the estimates and the components. This was done to establish a

consistent and valid basis for extrapolating from two baseline airplanes to a generic type application with a minimum of uncertainty.

The significant assumptions and ground rules which governed the development of the cost data are given below:

- Costs for all equipment and effort are expressed in constant 1983 dollars.
- Operating and maintenance costs were assumed to be 10 percent of the costs of implementation. It was determined by inspection that the case with incandescent lights and self-illuminated signs would dominate the alternate approach.
- In the retrofit case, it was assumed that each airline would either do its own work or have it done by subcontractors. The aircraft manufacturer was never involved with a retrofit estimate. This is an important ground rule because the labor rates varied between the aircraft manufacturers and the airline maintenance personnel in assessing the retrofit case versus incorporating the concepts during the manufacture of the airplanes.
- All acquisition cost data are considered to be rough-order-of-magnitude estimates only, and they do not represent a commitment on the part of Douglas or any other business to furnish products and services in the amounts stipulated.
- All hardware and software elements include base labor rate, overhead, G&A, miscellaneous other direct changes, and profit.
- No new tooling was required. It was assumed that work accomplished in the areas under consideration would have sufficient existing tooling to accomplish each task.
- All materials and purchased parts were flat priced — no progress improvement curve was assumed.

SECTION 3
CONCLUSIONS

The conclusions of this study are:

1. Two feasible systems have been defined for improved emergency lighting in dense cabin smoke conditions, and detailed implementation costs have been provided for possible use on the commercial fleet.
2. The costs of System Model 2, incandescent lights and self-illuminated exit signs, were found to be five times the cost of System Model 1, self-illuminated markers and exit signs.
3. The operational and maintenance costs of System Model 2 would be significantly higher than those of System Model 1.
4. Additional costs for emergency lighting certification due to prospective changes in FAR 25.812 were not considered in this study.

REFERENCES

1. Burton P. Chesterfield, Paul G. Rasmussen, and Robert C. Dillon, Emergency Cabin Lighting Installations: An Analysis of Ceiling vs Lower Cabin-Mounted Lighting During Evacuation Trials. FAA Civil Aeromedical Institute, Oklahoma City, February 1981. (AD-A013191)

2. James Demaree, Examination of Aircraft Interior Emergency Lighting in a Postcrash Fire Environment. FAA Technical Center, Atlantic City Airport, New Jersey. Report No. DOT-FAA-CT-82/55, December 1980.

3. J. D. Garner, J. G. Blethrow, and D. L. Lowrey, Readability of Self-Illuminated Signs in a Smoke-Obscured Environment. FAA Civil Aeromedical Institute, Oklahoma City, November 1979.

4. R. N. Walz, A Guide for the Use of Radioluminous Materials. 3M Co. Nuclear Products, St. Paul, Minn., 1977.

5. H. C. Klein and R. P. Singelyn, Light Emitting Diode Applications. McDonnell Douglas Corporation, Report No. MDC J7967, February 1979.

6. C. S. Pieroway, Electroluminescent Lighting Applications, PRAM – Aeronautical Systems Division, October 1981.

7. Air World Survey, Supplement to Vol. 34, No. 2. Aviation Data Service Inc. (AVDATA), Wichita, Kansas, 1982.

8. A. Cominsky, Study of Aircraft Crashworthiness for Fire Protection, NASA Report 166159, January 1981.

APPENDIX
FEDERAL AVIATION REGULATIONS

§ 25.811 Emergency exit marking.

(a) Each passenger emergency exit, its means of access, and its means of opening must be conspicuosly marked.

(b) The identity and location of each passenger emergency exit must be recognizable from a distance equal to the width of the cabin.

(c) Means must be provided to assist the occupants in locating the exits in conditions of dense smoke.

(d) The location of each passenger emergency exit must be indicated by a sign visible to occupants approaching along the main passenger aisle (or aisles). There must be—

(1) A passenger emergency exit loacator sign above the aisle (or aisles) near each passenger emergency exit, or at another overhead location if it is more practical because of low headroom, except that one sign may serve more than one exit if each exit can be seen readily from the sign;

(2) A passenger emergency exit marking sign next to each passenger emergency exit, except that one sign may serve two such exits if they both can be seen readily from the sign; and

(3) A sign on each bulkhead or divider that prevents fore and aft vision along the passenger cabin to indicate emergency exits beyond and obscured by the bulkhead or divider, except that if this is not possible the sign may be placed at another appropriate location.

[(e) The location of the operating handle and instructions for opening exits from the inside of the airplane must be shown in the following manner:

[(1) Each passenger emergency exit must have, on or near the exit, a marking that is readable from a distance of 30 inches.

[(2) Each Type I and Type A passenger emergency exit operating handle must—

[(i) Be self-illuminated with an initial brightness of at least 160 microlamberts; or

[(ii) Be conspicuously located and well illuminated by the emergency lighting even in conditions of occupant crowding at the exit.

[(3) Each Type III passenger emergency exit operating handle must be self-illuminated with an initial brightness of at least 160 microlamberts. If the operating handle is covered, self-illuminated cover removal instructions having an initial brightness of at least 160 microlamberts must also be provided.

[(4) Each Type A, Type I, and Type II passenger emergency exit with a locking mechanism released by rotary motion of the handle must be marked—

[(i) With a red arrow, with a shaft at least three-fourths of an inch wide and a head twice the width of the shaft, extending along at least 70 degrees of arc at a radius approximately equal to three-fourths of the handle length.

[(ii) So that the centerline of the exit handle is within ±1 inch of the projected point of the arrow when the handle has reached full travel and has released the locking mechanism, and

[(iii) With the word "open" in red letters 1 inch high, placed horizontally near the head of the arrow.]

(f) Each emergency exit that is required to be openable from the outside, and its means of opening, must be marked on the outside of the airplane. In addition, the following apply:

(1) The outside marking for each passenger emergency exit in the side of the fuselage must include a 2-inch colored band outlining the exit.

(2) Each outside marking including the band, must have color contrast to be readily distinguishable from the surrounding fuselage surface. The contrast must be such that if the reflectance of the darker color is 15 percent or less, the reflectance of the lighter color must be at least 45 percent. "Reflectance" is the ratio of the luminous flux reflected by a body to the luminous flux it receives. When the reflectance of the darker color is greater than 15 percent, at least a 30-percent difference between its reflectance and the reflectance of the lighter color must be provided.

(3) In the case of exits other than those in the side of the fuselage, such as ventral or tail cone exits, the external means of opening, including instructions if applicable, must be conspicuously marked in red, or bright chrome yellow if the background color is such that red is inconspicuous. When the opening means is located on only one side of the fuselage, a conspicuous marking to that effect must be provided on the other side.

(g) Each sign required by paragraph (d) of this section may use the word "exit" in its legend in place of the term "emergency exit".

§ 25.812 Emergency lighting.

(a) An emergency lighting system, independent of the main lighting system, must be installed. However, the sources of general cabin illumination may be common to both the emergency and the main lighting systems if the power supply to the emergency lighting system is independent of the power supply to the main lighting system. The emergency lighting system must include:

(1) Illuminated emergency exit marking and locating signs, sources of general cabin illumination, and interior lighting in emergency exit areas.

(2) Exterior emergency lighting.

(b) Emergency exit signs—

(1) For airplanes that have a passenger seating configuration, excluding pilot seats, of 10 seats or more must meet the following requirements:

(i) Each passenger emergency exit locator sign required by § 25.811(d)(1) and each passenger emergency exit marking sign required by § 25.811(d)(2) must

have red letters at least 1½ inches high on an illuminated white background, and must have an area of at least 21 square inches excluding the letters. The lighted background-to-letter contrast must be at least 10:1. The letter height to stroke-width ratio may not be more than 7:1 nor less than 6:1. These signs must be internally electrically illuminated with a background brightness of at least 25 foot-lamberts and a high-to-low background contrast no greater than 3:1.

(ii) Each passenger emergency exit sign required by § 25.811(d)(3) must have red letters at least 1½ inches high on a white background having an area of at least 21 square inches excluding the letters. These signs must be internally electrically illuminated or self-illuminated by other than electrical means and must have an initial brightness of at least 400 microlamberts. The colors may be reversed in the case of a sign that is self-illuminated by other than electrical means.

(2) For airplanes that have a passenger seating configuration, excluding pilot seats, of nine seats or less, that are required by § 25.811(d) (1), (2), and (3) must have red letters at least 1 inch high on a white background at least 2 inches high. These signs may be internally electrically illuminated, or self-illuminated by other than electrical means, with an initial brightness of at least 160 microlamberts. The colors may be reversed in the case of a sign that is self-illuminated by other than electrical means.

(c) General illumination in the passenger cabin must be provided so that when measured along the centerline of main passenger aisle(s), and cross aisle(s) between main aisles, at seat armrest height and at 40-inch intervals, the average illumination is not less than 0.05 foot-candle and the illumination at each 40-inch interval is not less than 0.01 foot-candle. A main passenger aisle(s) is considered to extend along the fuselage from the most forward passenger emergency exit or cabin occupant seat, whichever is farther forward, to the most rearward passenger emergency exit or cabin occupant seat, whichever is farther aft.

(d) The floor of the passageway leading to each floor-level passenger emergency exit, between the main aisles and the exit openings, must be provided with illumination that is not less than 0.02 foot-candle measured along a line that is within six inches of and parallel to the floor and is centered on the passenger evacuation path.

(e) Except for subsystems provided in accordance with paragraph (g) of this section that serve no more than one assist means, are independent of the airplane's main emergency lighting system, and are automatically activated when the assist means is erected, the emergency lighting system must be designed as follows:

[(1) The lights must be operable manually from the flight crew station and from a point in the passenger compartment that is readily accessible to a normal flight attendant seat.

[(2) There must be a flight crew warning light which illuminates when power is on in the airplane and the emergency lighting control device is not armed.

[(3) The cockpit control device must have an "on," "off," and "armed" position so that when armed in the cockpit or turned on at either the cockpit or flight attendant station the lights will either light or remain lighted upon interruption (except an interruption caused by a transverse vertical separation of the fuselage during crash landing) of the airplane's normal electric power. There must be a means to safeguard against inadvertent operation of the control device from the "armed" or "on" positions.]

(f) Exterior emergency lighting must be provided as follows:

(1) At each overwing emergency exit the illumination must be—

(i) Not less than 0.03 foot-candle (measured normal to the direction of the

incident light) on a two-square-foot area where an evacuee is likely to make his first step outside the cabin;

(ii) Not less than 0.05 foot-candle (measured normal to the direction of the incident light) for a minimum width of 42 inches for a Type A overwing emergency exit and of 2 feet for all other overwing emergency exits along the 30 percent of the slip-resistant portion of the escape route required in § 25.803(e) that is farthest from the exit; and

(iii) Not less than 0.03 foot-candle on the ground surface with the landing gear extended (measured normal to the direction of the incident light) where an evacuee using the established escape route would normally make first contact with the ground.

(2) At each non-overwing emergency exit not required by § 25.809(f) to have descent assist means the illumination must be not less than 0.03 foot-candle (measured normal to the direction of the incident light) on the ground surface with the landing gear extended where an evacuee is likely to make his first contact with the ground outside the cabin.

(g) The means required in § 25.809(f)(1) and (h) to assist the occupants in descending to the ground must be illuminated so that the erected assist means is visible from the airplane. In addition—

(1) If the assist means is illuminated by exterior emergency lighting, it must provide illumination of not less than 0.03 foot-candle (measured normal to the direction of the incident light) at the ground end of the erected assist means where an evacuee using the established escape route would normally make first contact with the ground, with the airplane in each of the attitudes corresponding to the collapse of one or more legs of the landing gear.

(2) If the emergency lighting subsystem illuminating the assist means serves no other assist means, is independent of the airplane's main emergency lighting system, and is automatically activated when the assist means is erected, the lighting provisions—

(i) May not be adversely affected by stowage; and

(ii) Must provide illumination of not less than 0.03 foot-candle (measured normal to the direction of incident light) at the ground end of the erected assist means where an evacuee would normally make first contact with the ground, with the airplane in each of the attitudes corresponding to the collapse of one or more legs of the landing gear.

(h) The energy supply to each emergency lighting unit must provide the required level of illumination for at least 10 minutes at the critical ambient conditions after emergency landing.

(i) If storage batteries are used as the energy supply for the emergency lighting system, they may be recharged from the airplane's main electric power system: *Provided*, That, the charging circuit is designed to preclude inadvertent battery discharge into charging circuit faults.

(j) Components of the emergency lighting system, including batteries, wiring relays, lamps, and switches must be capable of normal operation after having been subjected to the inertia forces listed in § 25.561(b).

(k) The emergency lighting system must be designed so that after any single transverse vertical separation of the fuselage during crash landing—

(1) Not more than 25 percent of all electrically illuminated emergency lights required by this section are rendered inoperative, in addition to the lights that are directly damaged by the separation;

(2) Each electrically illuminated exit sign required under § 25.811(d)(2) remains operative exclusive of those that are directly damaged by the separation; and

(3) At least one required exterior emergency light for each side of the airplane remains operative exclusive of those that are directly damaged by the separation.