COPY 1

FAA WJH Technical Center
00093447

DOT/FAA/CT-83/44

A Laboratory Test for Evaluating the Fire Containment Characteristics of Aircraft Class D Cargo Compartment Lining Material

Louis J. Brown, Jr.
Charles R. Cole

October 1983

Final Report

This document is available to the U.S. public through the National Technical Information Service, Springfield, Virginia 22161.

FAA WJH Technical Center
Tech Center Library
Atlantic City, NJ 08405

U.S. Department of Transportation
Federal Aviation Administration
Technical Center
Atlantic City Airport, N.J. 08405

AVAILABLE IN
ELECTRONIC FORMAT

NOTICE

This document is disseminated under the sponsorship of the Department of Transportation in the interest of information exchange. The United States Government assumes no liability for the contents or use thereof.

The United States Government does not endorse products or manufacturers. Trade or manufacturer's names appear herein solely because they are considered essential to the object of this report.

Technical Report Documentation Page

1. Report No.	2. Government Accession No.	3. Recipient's Catalog No.
DOT/FAA/CT-83/44		

4. Title and Subtitle	5. Report Date
A LABORATORY TEST FOR EVALUATING THE FIRE CONTAINMENT CHARACTERISTICS OF AIRCRAFT CLASS D CARGO COMPARTMENT LINING MATERIALS	October 1983
	6. Performing Organization Code
	8. Performing Organization Report No.
7. Author(s)	
Louis J. Brown, Jr. and Charles R. Cole	DOT/FAA/CT-83/44
9. Performing Organization Name and Address	10. Work Unit No. (TRAIS)
Federal Aviation Administration Technical Center Atlantic City Airport, New Jersey 08405	11. Contract or Grant No. 181-350-400
	13. Type of Report and Period Covered
12. Sponsoring Agency Name and Address U.S. Department of Transportation Federal Aviation Administration Technical Center Atlantic City Airport, New Jersey 08405	Final July 1982 - March 1983
	14. Sponsoring Agency Code

15. Supplementary Notes

16. Abstract

The Federal Aviation Administration Standard 2-gallon/hour burner was adapted to measure the burn-through resistance of aircraft cargo compartment lining materials. This laboratory test can subject lining samples to the fire conditions found in full-scale class D cargo compartment tests. A 5-minute test period is of adequate duration to evaluate the performance of cargo lining materials, based on full-scale test results which showed that class D fire intensity is reduced to a smoldering state after several minutes. It was determined that the 2-gallon/hour burner test is superior to the vertical and 45° bunsen burner tests specified in Federal Air Regulations (FAR's) 25.853 and 25.855 for evaluating the flammability and burn-through resistance of cargo compartment lining materials. The following criteria for class D cargo compartment lining materials using the 2-gallon/hour burner test are proposed: Sample must prevent burn-through for 5 minutes, and peak temperatures at 4 inches above the upper surface of a horizontal test sample should not exceed 400° Fahrenheit. Based on results with this laboratory test, it is concluded that fiberglass lining materials provide sufficient protection to prevent burn-through in a class D cargo compartment fire, however, Nomex™ and Kevlar™ lining materials will not contain a class D cargo compartment fire.

17. Key Words	18. Distribution Statement
Cargo Compartment Lining Materials Aircraft Fires Laboratory Fire Test	Document is available to the U.S. public through the National Technical Information Service, Springfield, Virginia 22161

19. Security Classif. (of this report)	20. Security Classif. (of this page)	21. No. of Pages	22. Price
Unclassified	Unclassified	35	

Form DOT F 1700.7 (8-72) Reproduction of completed page authorized

METRIC CONVERSION FACTORS

Approximate Conversions to Metric Measures

Symbol	When You Know	Multiply by	To Find	Symbol
		LENGTH		
in	inches	*2.5	centimeters	cm
ft	feet	30	centimeters	cm
yd	yards	0.9	meters	m
mi	miles	1.6	kilometers	km
		AREA		
in^2	square inches	6.5	square centimeters	cm^2
ft^2	square feet	0.09	square meters	m^2
yd^2	square yards	0.8	square meters	m^2
mi^2	square miles	2.6	square kilometers	km^2
	acres	0.4	hectares	ha
		MASS (weight)		
oz	ounces	28	grams	g
lb	pounds	0.45	kilograms	kg
	short tons (2000 lb)	0.9	tonnes	t
		VOLUME		
tsp	teaspoons	5	milliliters	ml
Tbsp	tablespoons	15	milliliters	ml
fl oz	fluid ounces	30	milliliters	ml
c	cups	0.24	liters	l
pt	pints	0.47	liters	l
qt	quarts	0.95	liters	l
gal	gallons	3.8	liters	l
ft^3	cubic feet	0.03	cubic meters	m^3
yd^3	cubic yards	0.76	cubic meters	m^3
		TEMPERATURE (exact)		
°F	Fahrenheit temperature	5/9 (after subtracting 32)	Celsius temperature	°C

*1 in = 2.54 (exactly). For other exact conversions and more detailed tables, see NBS Misc. Publ. 286, Units of Weights and Measures, Price $2.25, SD Catalog No. C13.10:286.

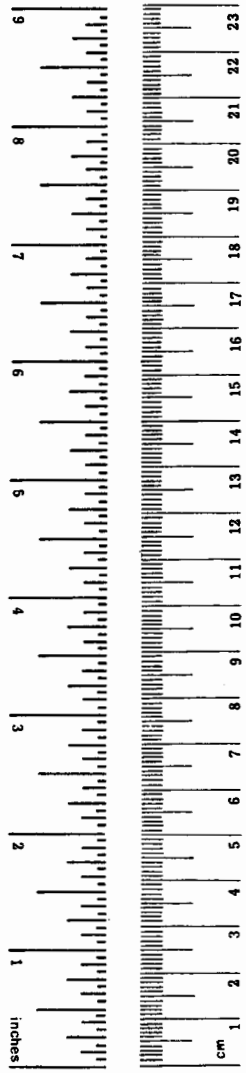

Approximate Conversions from Metric Measures

Symbol	When You Know	Multiply by	To Find	Symbol
		LENGTH		
mm	millimeters	0.04	inches	in
cm	centimeters	0.4	inches	in
m	meters	3.3	feet	ft
m	meters	1.1	yards	yd
km	kilometers	0.6	miles	mi
		AREA		
cm^2	square centimeters	0.16	square inches	in^2
m^2	square meters	1.2	square yards	yd^2
km^2	square kilometers	0.4	square miles	mi^2
ha	hectares (10,000 m^2)	2.5	acres	
		MASS (weight)		
g	grams	0.035	ounces	oz
kg	kilograms	2.2	pounds	lb
t	tonnes (1000 kg)	1.1	short tons	
		VOLUME		
ml	milliliters	0.03	fluid ounces	fl oz
l	liters	2.1	pints	pt
l	liters	1.06	quarts	qt
l	liters	0.26	gallons	gal
m^3	cubic meters	35	cubic feet	ft^3
m^3	cubic meters	1.3	cubic yards	yd^3
		TEMPERATURE (exact)		
°C	Celsius temperature	9/5 (then add 32)	Fahrenheit temperature	°F

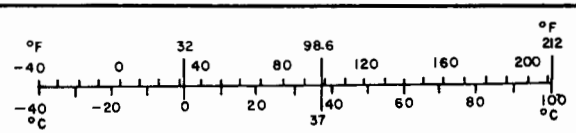

ACKNOWLEDGEMENTS

The author would like to thank Messrs. Richard G. Hill and David R. Blake for their helpful advice throughout the project. George R. Johnson is credited with all of the drawings in this report. Messrs. Kevin Fisher and Charles Huber are also acknowledged for their assistance in preparation for the laboratory tests.

TABLE OF CONTENTS

	Page
EXECUTIVE SUMMARY	viii
INTRODUCTION	1
Purpose	1
Background	1
Test Materials	1
DISCUSSION	1
General Approach	1
Test Measurements	2
TEST RESULTS AND ANALYSIS	3
SUMMARY OF RESULTS	8
CONCLUSIONS	9
REFERENCES	9
APPENDICES	
A - List of Materials Tested	
B - 2-Gallon/Hour Burner Specifications	

LIST OF ILLUSTRATIONS

Figure		Page
1	Photograph of 2-Gallon/Hour Kerosene Burner	10
2	Lennox OB-32 Oil Burner	11
3	Draft Tube Extension for FAA Hose Test Burner	12
4	2-Gallon/Hour Burner with Vertical Sample Mounting	13
5	2-Gallon/Hour Burner Temperature Profile	13
6	Thermocouple Rake Bracket (Series One)	14
7	Calorimeter Bracket (Series One)	15
8	2-Gallon/Hour Burner with Horizontal and Vertical Sample Mounting	16
9	Thermocouple Rake Bracket (Series Two)	17
10	Calorimeter Bracket (Series Two)	18
11	Fiberglass™ and Nomex™ Samples from Series One	19
12	Series Two - Test 1 - Nonwoven Fiberglass	20
13	Series Two - Test 2 - Woven Fiberglass	21
14	Series Two - Test 3 - Woven Fiberglass Top and Nomex™ Side	22
15	Series Two - Test 4 - Nomex™	23
16	Series Two - Test 5 - Kevlar™	24
17	Series Two - Test 6 - Kevlar™	25
18	Series Two - Test 7 - Kevlar™	26

LIST OF TABLES

Table		Page
1	Series One (Vertical Sample Only) Laboratory Test Results	4
2	Series Two (Horizontal and Vertical Samples) Laboratory Test Results	5
3	Series Two Heat Flux and Temperature Measurement Results	6
4	Series Two Replicate Test Results	8

EXECUTIVE SUMMARY

As a result of a cargo compartment fire that occurred in a Saudi Arabian Airlines L-1011, full-scale tests determined that current federal regulations (FAR 25.853 and 25.855) do not reflect the burn-through resistance requirements of class D cargo compartment liners subjected to realistic fires. This report describes a more severe laboratory test for class D liner materials.

The Federal Aviation Administration (FAA) standard 2-gallon/hour burner was adapted to measure the burn-through resistance of aircraft cargo compartment lining materials. This laboratory test was selected because of its severe fire exposure conditions, which reflect the fire intensity measured in the full-scale class D tests. A 5-minute test duration is adequate to evaluate the performance of these materials, since the full-scale results indicated that class D cargo compartment fires will produce severe fire exposure conditions for only several minutes. Beyond this time, the fire diminishes to a smoldering state due to oxygen starvation.

One series of tests was conducted with the 2-gallon/hour burner oriented horizontally and the test sample oriented vertically. This series produced fire exposure conditions slightly greater than those measured by Blake and Hill, "Fire Containment Characteristics of Aircraft Class D Cargo Compartments" (reference 1).

A second series of tests was conducted with the 2-gallon/hour burner oriented vertically. Two test samples were mounted in a metal frame simulating a ceiling/sidewall assembly. Fire exposure settings to duplicate peak conditions measured during full-scale tests are 1700° F and 8.0 Btu/ft^2-s at 8 inches above the exit of the burner cone (where the ceiling test sample is located). Also, good repeatability was achieved with these exposure conditions. "Pass" criteria for class D cargo compartment lining materials using the 2-gallon/hour burner laboratory test should be: Materials that must prevent burn-through for 5 minutes, and peak temperatures at 4 inches above the upper surface of a horizontal test sample should not exceed 400° F.

Based on results with this laboratory test, the following conclusions were made:

1. Fiberglass lining materials provide sufficient protection to prevent burn-through for class D type cargo compartment fires.

2. Nomex™ and Kevlar™ lining materials do not provide sufficient protection to prevent burn-through for class D type cargo compartment fires.

3. Both ceiling and sidewall class D cargo compartment lining materials should be burn-through resistant.

4. The modified 2-gallon/hour burner is a more suitable burn-through test than FAR 25.853 and 25.855.

INTRODUCTION

PURPOSE.

The purpose of this project was to design and develop a laboratory test method relevant to the fire containment characteristics of aircraft class D cargo compartment lining materials and suitable for materials qualification testing.

BACKGROUND.

Full-scale tests have been conducted by the Federal Aviation Administration (FAA), utilizing various aircraft cargo compartment lining materials installed in a simulated class D cargo compartment (reference 1). Current Federal Air Regulations (FAR's) 25.853 and 25.855 (reference 2) govern the flammability and burn-through resistance requirements of these materials, respectively. These FAR's specify use of the vertical and 45° bunsen burner test methods. A Nomex™ cargo lining material, such as that found in the C-3 cargo compartment of the Lockheed L-1011 aircraft, passes the flammability and burn-through resistance requirements of these two test methods. However, this same Nomex cargo lining material tested under realistic full-scale fire conditions produced burn-through in each test. It was concluded that the test methods specified in FAR 25.853 and 25.855 do not reflect the burn-through resistance of class D cargo liners subjected to realistic fires (reference 1). A more severe laboratory test was needed to subject class D cargo compartment lining materials to realistic fire conditions, such as those found in the full-scale tests (reference 1), in order to evaluate the burn-through resistance of the lining materials.

TEST MATERIALS.

Four different types of cargo lining material were obtained for testing purposes: One woven fiberglass/polyester liner, one layered (nonwoven) fiberglass/epoxy liner, one Nomex/epoxy liner, and four Kevlar™/epoxy liners. Two of these seven materials, the Nomex/epoxy liner and the woven fiberglass/polyester liner, were previously tested under simulated full-scale conditions (reference 1). A detailed description of these materials is found in appendix A.

DISCUSSION

GENERAL APPROACH.

The 2-gallon/hour kerosene burner used in the FAA "Standard Fire Test Apparatus" (reference 3) was found to be a suitable laboratory fire source for characterization of the burn-through resistance of aircraft class D cargo compartment lining materials. As the original Lennox burner (figures 1, 2, and 3) is no longer commercially available, it was necessary to find an acceptable replacement. An attempt to purchase a Carlin 200 CRD burner (reference 4) proved futile as it is also being phased out of production. A suitable replacement burner was fabricated by Park Oil Burner, Atlantic City, New Jersey to the "Standard" burner specifications, appendix B.

The Park Oil burner was initially oriented with the burner cone positioned horizontally. A vertical sample mounting stand was fabricated (figure 4) to position a

cargo lining material at 4 inches from the burner cone. Calibration tests were performed and the heat output of the burner was found to be a minimum of 4500 Btu/hour, transferred to a 1/2-inch copper tube as specified in reference 3. Additional calibration was performed using temperature and heat flux measurements. All temperature measurements were made using Thermoelectric chromel-alumel Ceramocouples™ (nominal OD 1/16"). The burner intake air damper was adjusted to produce a minimum of 1850° F through a 7-inch horizontal line, 1 inch above the centerline of the burner cone and at a distance of 4 inches (figure 5). This temperature pattern was generated with 11 thermocouples mounted in a steel angle bracket (figure 6) to check for compliance with this temperature calibration procedure. Heat flux measurements using a Thermogage, Model 1000-1 water-cooled calorimeter produced approximately 10 Btu/ft^2-s at the 4-inch distance. The calorimeter was mounted as shown in figure 7 and clamped to the test sample mounting stand.

As full-scale cargo compartment fire test results became available (reference 1), it became apparent that the temperature grid produced with the burner cone oriented horizontally appeared to be approximately 300° F higher than the maximum temperature actually measured on the liner surface in the full-scale tests. Also, the heat flux level created by the burner was approxiately 1.5 to 2.0 Btu/ft^2-s higher than the maximum full-scale test values. Full-scale tests also showed that class D cargo compartment fires will produce these intense fire exposure conditions for no longer than several minutes. Beyond this time, the fire conditions diminished to a smoldering state, due to oxygen starvation. Based on these data, it was concluded that a 5-minute fire exposure with the 2-gallon/hour burner was sufficient to evaluate class D compartment lining materials.

In order to achieve the levels of temperature and heat flux measured in the full-scale tests, the burner cone sample distance was increased beyond the standardized setting (reference 3). However, as this was accomplished, the temperature and heat flux levels produced by the burner rapidly diminished while fluctuation of these measurements widely increased. This was due to the sharp bend in the pattern of the flame exiting the burner cone.

It was found that more invariant temperature and heat flux levels could be obtained with the burner oriented vertically. The sample mounting stand was then modified to accommodate horizontal placement (simulated ceiling) of the sample above the burner cone (figure 8). In addition, provisions were made for vertical sample mounting (simulated sidewall) at a right angle, with attachment to the horizontal sample, to form a ceiling sidewall arrangement. The sample holder frame was fabricated with 1- x 1-inch angle iron to hold two 16- by 25-inch cargo liner samples (sidewall and ceiling). This fixture forms a perimeter mount for ease of sample attachment. An 8-inch burner cone-to-ceiling sample distance was found to produce approximately 8.0 to 8.5 Btu/ft^2-s and a minimum of 1700° F through a 7-inch horizontal line on the surface of the cargo liner facing the burner. These are the maximum heat flux and temperature levels, respectively, that were measured in the full-scale tests (reference 1). Calibration heat flux measurement is achieved by mounting the calorimeter assembly (figure 9) in place of the horizontal ceiling sample. Calibration temperature measurement is achieved by mounting the thermocouple assembly (figure 10) in place of the horizontal ceiling sample.

TEST MEASUREMENTS.

Tests were documented by 16mm motion picture, 35mm motorized still, and video tape. Burn-through time was visually determined for all tests. For tests with the burner

cone oriented vertically, temperature and heat flux levels were measured 4 inches above the top surface of the horizontal ceiling liner. This dimension was arbitrarily selected as being representative of one-third to one-half the vertical distance from a cargo compartment ceiling liner to the passenger cabin floor above. All tests were conducted in a well-ventilated room; however, the draft effect did not affect or compromise the test results.

TEST RESULTS AND ANALYSIS

The first series of tests was conducted utilizing the 2-gallon/hour burner with the burner cone oriented horizontally, 4 inches from a test sample.

All seven cargo lining materials were tested in this series. The results from these tests are presented in table 1. In these early 5-minute tests, the advantage that the fiberglass liner had over the Nomex/epoxy liner (figure 11) became apparent. Observation of the backside of the sample indicated that the resin on the woven fiberglass liner ignited and continued flaming until there was no resin left. Only the fiberglass cloth fabric remained, which effectively prevented burn-through. When the nonwoven fiberglass/epoxy liner initially ignited, a Tedlar™ finish showered flaming drippings. The epoxy resin then continued flaming until it was gone, leaving a lattice-like structure of fiberglass that prevented complete burn-through. However, both the Nomex/epoxy and Kevlar/epoxy liner materials began to shrink when the flame was applied and then split open allowing the fire to penetrate and consume the remaining liner material. For these tests, the burner was removed shortly after burn-through was visually detected. The Nomex/epoxy liner burned through in 8 seconds and the Kevlar/epoxy liners burned through from 12 to 38 seconds, depending on sample thickness.

A second series of tests was conducted utilizing the 2-gallon/hour burner with the burner cone oriented vertically, 8 inches below a horizontal (ceiling) sample and 2 inches from a vertical (sidewall) sample. Seven tests were performed with various combinations of the seven cargo lining materials. The results from these tests are presented in table 2. These 5-minute tests also showed the advantage of a fiberglass liner over a Nomex or Kevlar liner subjected to fire exposure conditions similar to those measured in the full-scale tests (reference 1). Table 3 includes the heat flux and temperature level measurements for these seven tests. Following is a detailed description of these seven tests.

Test 1 consisted of two nonwoven fiberglass/epoxy samples mounted in the horizontal and vertical sample holders. The test duration was 5 minutes. The calorimeter at 4 inches above the backside of the sample measured a peak heat flux of 5.4 Btu/ft^2-s at 15 seconds into the test. The rise in heat flux was due to flaming of the Epoxy resin. After the resin was consumed, the heat flux leveled off at 1.5 Btu/ft^2-s. This heat flux is attributed to heat leakage through the fiberglass. The peak temperature measured during this test coincided with peak heat flux measurements. The temperature measurement at 4 inches above the ceiling sample gave a good indication of the burn-through resistance of this fiberglass lining material. Figure 12 is a sequence of pictures from this test.

Test 2 consisted of two woven fiberglass/polyester samples mounted in the horizontal and vertical sample holders. The test duration was 5 minutes. The calorimeter

TABLE 1. SERIES ONE (VERTICAL SAMPLE ONLY) LABORATORY TEST RESULTS

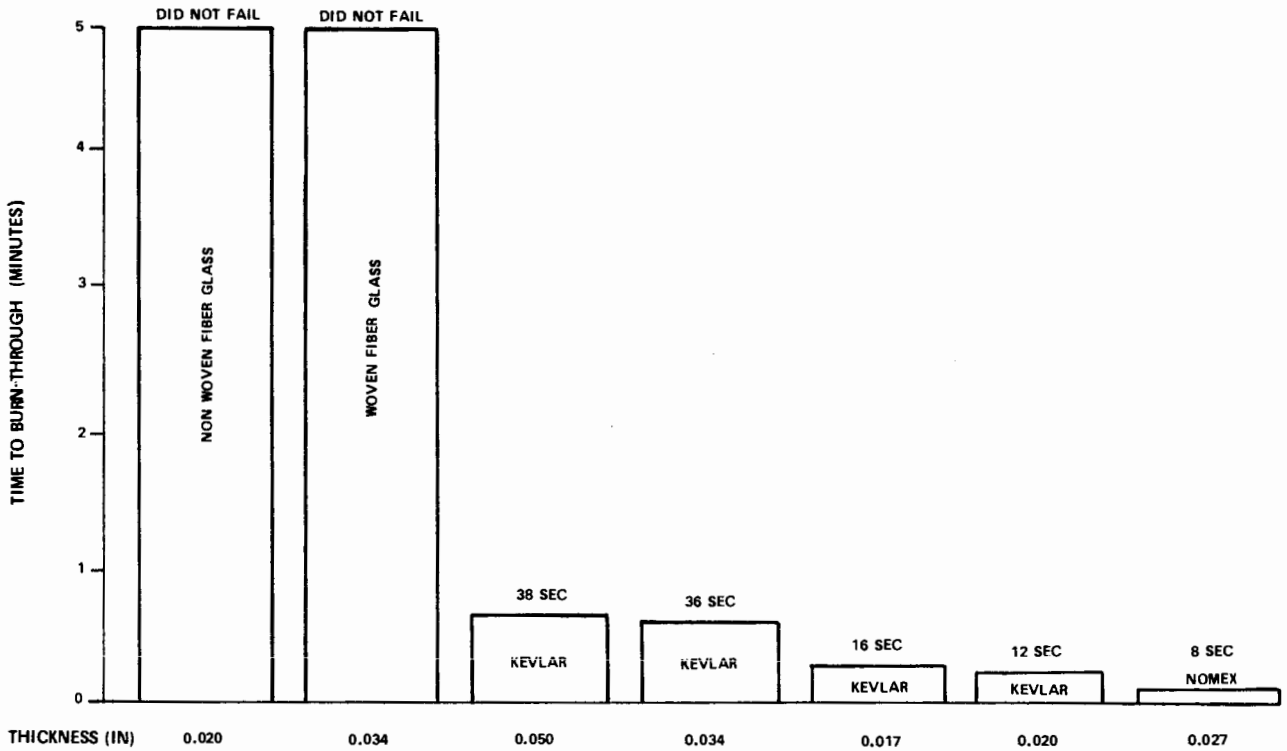

83-41

TABLE 2. SERIES TWO (HORIZONTAL AND VERTICAL SAMPLES) LABORATORY TEST RESULTS

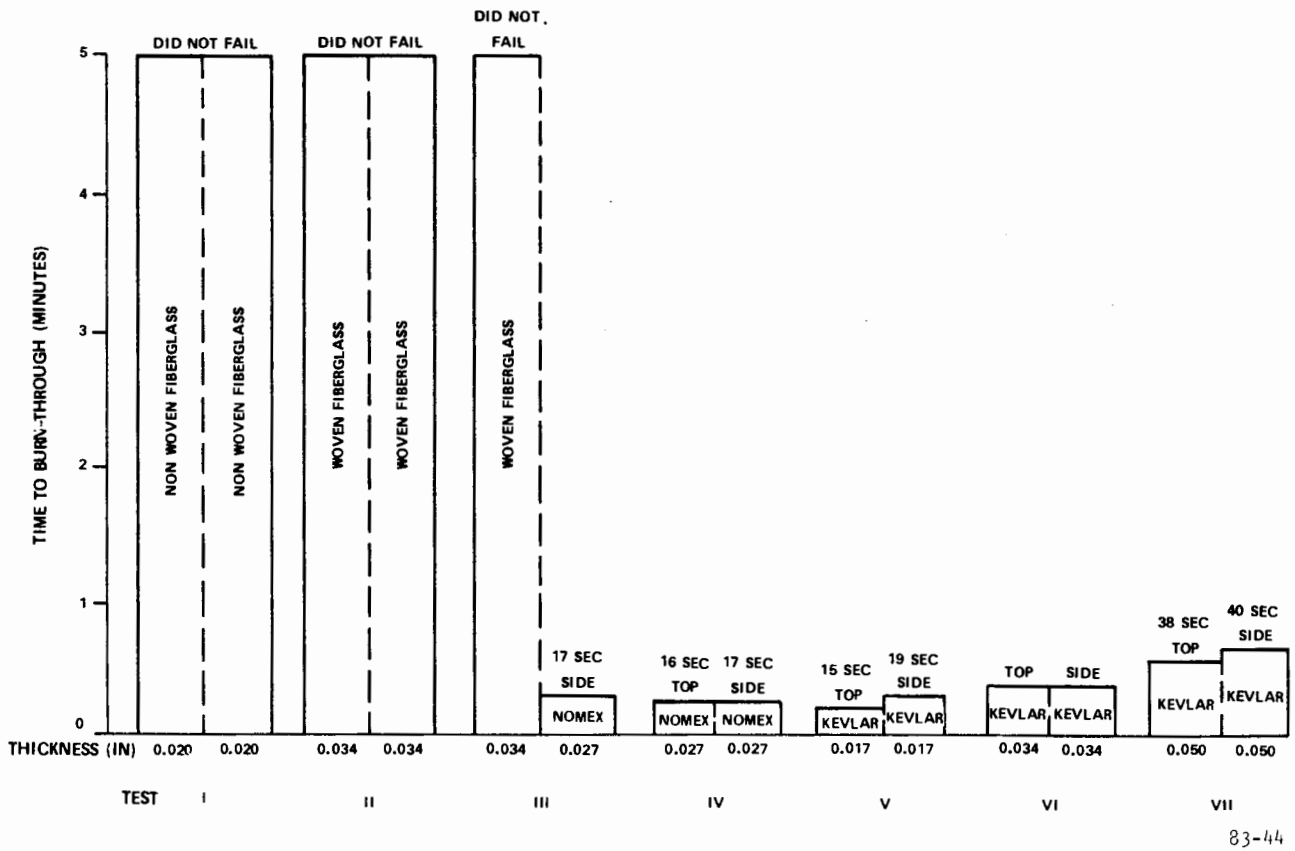

83-44

TABLE 3. SERIES TWO HEAT FLUX AND TEMPERATURE MEASUREMENT RESULTS

TEST	MATERIAL TOP	MATERIAL SIDE	DURATION SEC.	TIME TO BURN THRU TOP (SEC)	TIME TO BURN THRU SIDE(SEC)	HEAT FLUX (BTU/FTS) PEAK (SEC)	HEAT FLUX (BTU/FTS) AFTER PEAK	PEAK TEMP. (°F)	COMMENTS
1	Non-Woven Fiberglass	Non-Woven Fiberglass	300	No Burn Through	No Burn Through	5.4 @ 15	1.5	363	
2	Woven Fiberglass	Woven Fiberglass	300	No Burn Through	No Burn Through	1.4 @ 87	.8	270	
3	Woven Fiberglass	Nomex	300	No Burn Through	17	3.2 @ 30	1.0	520	
4	Nomex	Nomex	20	16	17	8.0 @ 18	-	1700	
5	Kevlar .017"	Kevlar .017"	20	15	19	8.5 @ 18	-	1825	
6	Kevlar .034"	Kevlar .034"	35	-	-	-	-	1775	Horizontal Sample Fulled out of holder; test terminated @ 22 sec.
7	Kevlar .050"	Kevlar .050"	40	38	40	10.2 @ 39	-	1810	

measured a peak heat flux of 1.4 Btu/ft^2-s of 87 seconds into the test. The rise in heat flux was due to pyrolysis of the polyester resin. After the resin was consumed the heat flux leveled off at 0.8 Btu/ft^2-s. A peak temperature of 270° F was measured just before the end of the test. The polyester resin pyrolyzed but did not ignite on the upper surface of the horizontal sample. The woven fiberglass/polyester liner appeared to be more effective in preventing heat buildup on the backside of the ceiling and sidewall samples than the nonwoven fiberglass/epoxy. Figure 13 is a sequence of pictures from this test.

Test 3 consisted of a woven fiberglass/polyester sample mounted in the horizontal sample holder and a Nomex/epoxy sample mounted in the vertical sample holder. The test duration was 5 minutes. Burn-through occurred on the vertical sample (Nomex) at 17 seconds into the test. Flames which penetrated the failed Nomex sample ignited the upper surface of the fiberglass sample causing a higher recorded peak heat flux. The results of this test show what can happen when only the ceiling liner in a Nomex/epoxy lined cargo compartment is replaced with a fiberglass/polyester liner. The fiberglass cloth remained intact throughout the 5 minutes of fire exposure. The Nomex sample was extensively damaged as shown in the sequence of pictures in figure 14. The peak temperature of 520° F was recorded at 20 seconds into the test for the thermocouple adjacent to the calorimeter. This peak temperature is attributed to resin ignition only. The advantage of the woven fiberglass/polyester liner over the Nomex/epoxy liner is apparent in this ceiling-sidewall comparison test. These extreme conditions are due to complete failure of the sidewall test liner.

Test 4 consisted of two Nomex/epoxy samples mounted in the horizontal and vertical sample holders. The test duration was 20 seconds. Burn-through occurred on the horizontal and vertical samples at 16 and 17 seconds into the test, respectively. A peak heat flux of 8.0 Btu/ft^2-s was measured by the calorimeter at 18 seconds into the test. The lack of burn-through resistance of the Nomex/epoxy liner is easily determined in this short duration test. A peak temperature of 1700° F was recorded at the time the burner flame was turned off. Figure 15 is a sequence of pictures from this test.

Test 5 consisted of two Kevlar/epoxy samples (0.017-inch thickness) mounted in the horizontal and vertical sample holders. The test duration was 20 seconds. Burn-through occurred on the horizontal sample at 15 seconds into the test. Burn-through occurred on the vertical sample at 19 seconds into the test. A peak heat flux of 8.5 Btu/ft^2-s was measured by the calorimeter at 18 seconds into the test. A peak temperature of 1720° F was recorded at the time the burner flame was turned off. The Kevlar/epoxy liner material in this test exhibited comparable lack of burn-through resistance with that of the Nomex/epoxy liner test. Figure 16 is a sequence of pictures from this test.

Test 6 consisted of two Kevlar/epoxy samples (0.034-inch thickness) mounted in the horizontal and vertical sample holders. Test duration was 35 seconds. At 24 seconds into the test the horizontal sample pulled out of the sample holder and flames penetrated to the upper surface. The test was terminated shortly thereafter. Figure 17 includes a sequence of pictures from this test. Flame penetration can be seen in this figure where the sample pulled away from the mounting frame.

Test 7 consisted of two Kevlar/epoxy samples (0.050-inch thickness) mounted in the horizontal and vertical sample holders. Test duration was 40 seconds.

Burn-through occurred in the horizontal sample at 38 seconds into the test. Burn-through occurred in the vertical sample at 40 seconds into the test. The calorimeter measured a peak heat flux of 10.2 Btu/ft^2-s at 39 seconds into the test. A peak temperature of 1900° F was recorded at the time the burner flame was turned off. Figure 18 is a sequence of pictures from this test. There appears to be a slight advantage of using a Kevlar/epoxy, liner which is nearly three times the thickness of the Kevlar/epoxy sample in test 5. However, even the thicker Kevlar/epoxy liner cannot prevent burn-through.

Replicate tests were performed for tests 1 through 4. Good repeatability was demonstrated with these tests. Data for these tests are found in table 4. Due to an insufficient amount of test materials it was impossible to perform replicate tests of the Kevlar/epoxy samples.

TABLE 4. SERIES TWO REPLICATE TEST RESULTS

TEST	MATERIAL TOP	MATERIAL SIDE	DURATION SEC.	BURNTHROUGH TOP (SEC.)	BURNTHROUGH SIDE (SEC.)	TEMP °F	COMMENTS
1 A	Non Woven Fiberglass	Non Woven Fiberglass	300	No Burn Through	No Burn Through	363	
B	"	"	300	"	"	268	
C	"	"	180				Sample Fell Out
2 A	Woven Fiberglass	Woven Fiberglass	300	"	"	270	
B	"	"	300	"	"	274	
C	"	"	300	"	"	284	
3 A	"	Nomex	300	"	17	520	
B	"	"	300	"	21	489	
C	"	"	300	"	18	559	
4 A	Nomex	"	20	16	17	1800	
B	"	"	20	12	18	1750	
C	"	"	20	14	20	1780	

SUMMARY OF RESULTS

1. When set at peak fire exposure conditions measured in full-scale tests, the 2-gallon/hour burner produced burn-through in Nomex/epoxy (0.027-inch thickness) cargo compartment lining materials in less than 20 seconds.

2. This laboratory test produced burn-through in a Kevlar/epoxy (0.050-inch thickness) aircraft cargo compartment lining material in less than 40 seconds.

3. This laboratory test produced burn-through in a Kevlar/epoxy (0.017-inch thickness) aircraft cargo compartment lining material in less than 20 seconds.

4. This laboratory test did not produce burn-through in a nonwoven fiberglass/epoxy (0.020-inch thickness) or in a woven fiberglass/polyester (0.034-inch thickness) aircraft cargo compartment lining material during a 5-minute fire exposure.

5. Replicate laboratory tests of fiberglass and Nomex cargo lining materials produced consistent test results.

6. When burn-through occurred on a ceiling and sidewall mount combination, peak, temperatures of approximately 1800° F were recorded at 4 inches above the horizontally mounted sample.

7. When burn-through did not occur on a ceiling and sidewall mount combination, peak temperatures did not exceed 400° F at 4 inches above the horizontally mounted sample.

8. When burn-through did not occur on a ceiling mounted sample but did occur on a sidewall mounted sample, peak temperatures did not exceed 600° F at 4 inches above the horizontally mounted sample.

CONCLUSIONS

1. The Federal Aviation Administration standard 2-gallon/hour burner can provide fire exposure conditions and cargo liner burn-through results that reflect those found in full-scale class D cargo compartment testing. A 5-minute test is adequate to evaluate the performance of these materials based on full-scale test results.

2. This laboratory test is superior to the vertical and 45° bunsen burner tests specified in FAR 25.853 and 25.855 for evaluating the flammability and burn-through resistance of cargo compartment fires.

3. Based on results with this laboratory test, fiberglass lining materials provide sufficient protection to prevent burn-through to class D type cargo compartment fires.

4. Based on results with this laboratory test, a woven fiberglass liner was superior to a nonwoven fiberglass liner.

5. Based on results with this laboratory test, Nomex™ and Kevlar™ lining materials do not provide sufficient protection to prevent burn-through for class D type cargo compartment fires.

REFERENCES

1. Blake, D. R. and Hill, R. G., Fire Containment Characteristics of Aircraft Class D Cargo Compartments, FAA-CT-82-156, 1983.

2. DOT, Federal Aviation Administration, Airworthiness Standards: Transport Category Airplanes, Federal Aviation Regulations, Vol. III, Part 25, Transmittal 10, effective May 1, 1972.

3. Federal Aviation Administration Flight Standards Service, Power Plant Engineering Report No. 3A (revised), Standard Fire Test Apparatus and Procedure for Flexible Hose Assemblies, March 1978.

4. Demaree, J. E., Re-evaluation of Burner Characteristics for Fire Resistance Test, FAA-RD-76-213, January 1977.

FIGURE 1. PHOTOGRAPH OF 2-GALLON/HOUR KEROSENE BURNER

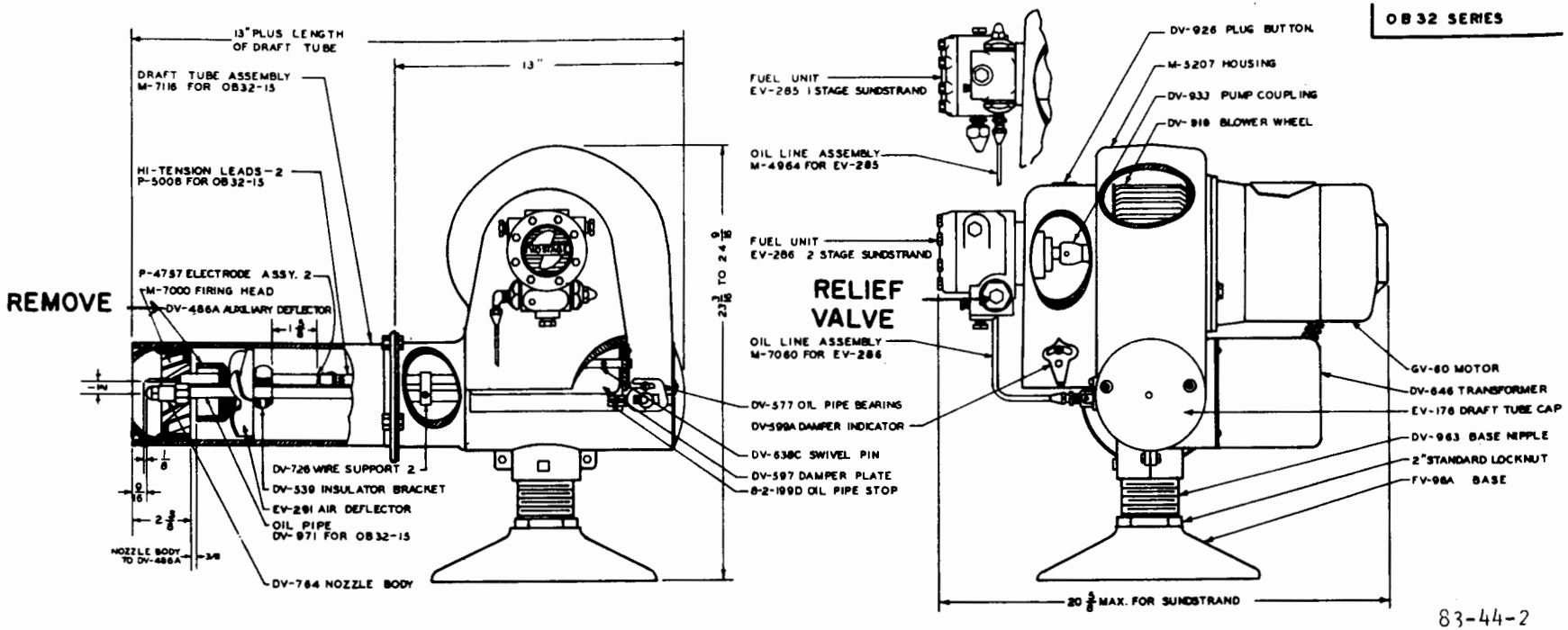

FIGURE 2. LENNOX OB-32 OIL BURNER

FAA WJH Technical Center
00093447

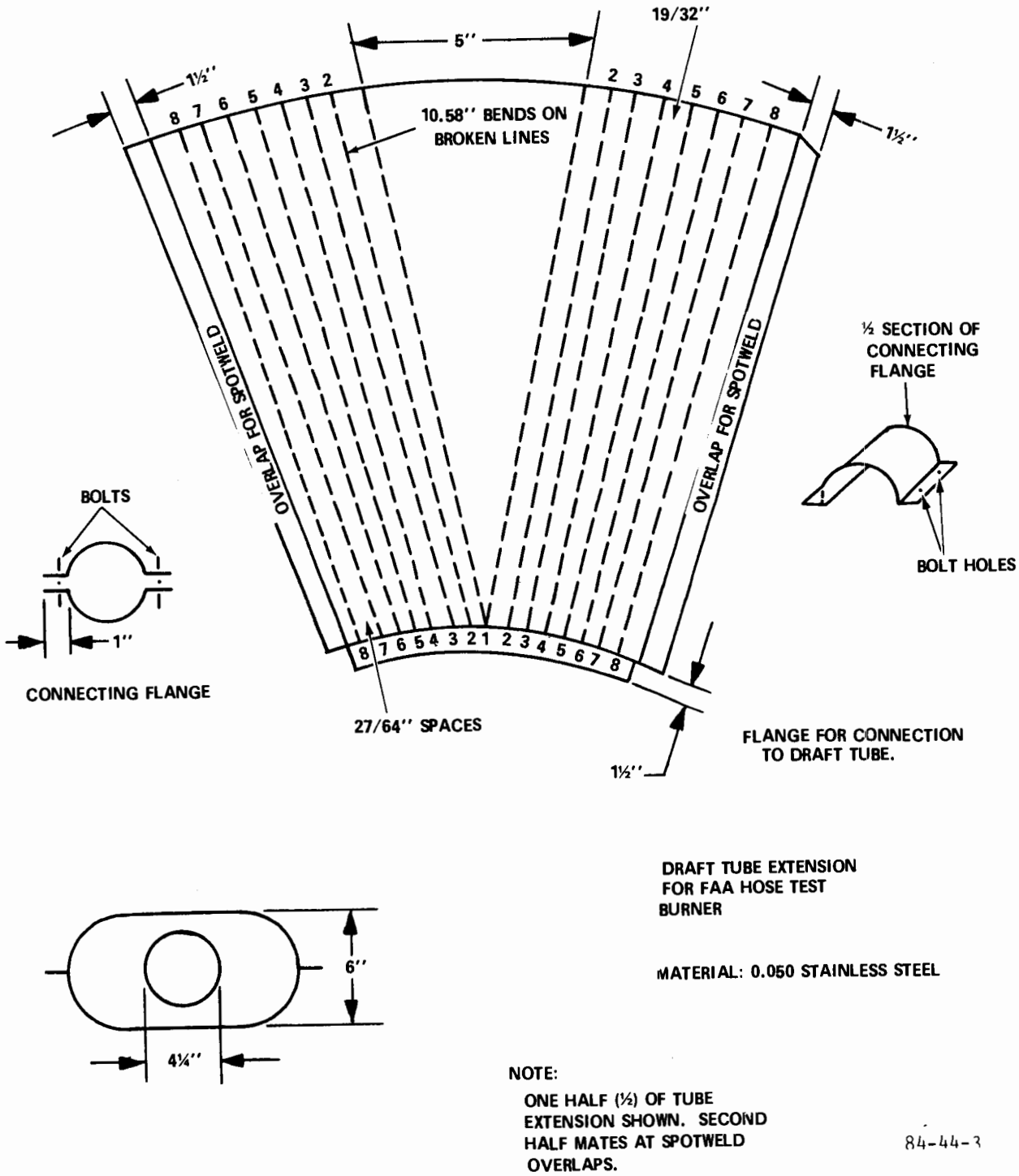

FIGURE 3. DRAFT TUBE EXTENSION FOR FAA HOSE TEST BURNER

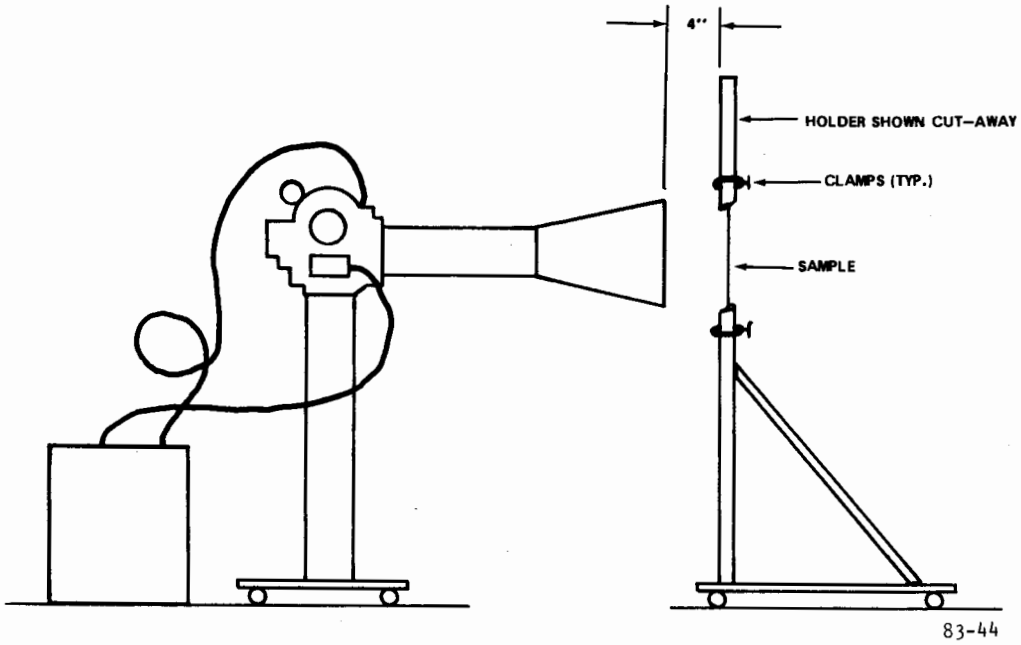

FIGURE 4. 2-GALLON/HOUR BURNER WITH VERTICAL SAMPLE MOUNTING

	1	2	3	4	5	6	7	8	9	10	11
63/4"	1582	1569	1525	1424	1433	1694	1699	1665	1681	1649	1269
6"	1649	1721	1717	1813	1868	1887	1804	1743	1740	1726	1394
5"	1658	1966	1933	1980	1962	1957	1924	1933	1863	1712	1428
4"	1582	1840	1896	1905	1910	1910	1915	1924	1813	1609	1269
3"	1402	1690	1735	1762	1744	1717	1781	1730	1547	1359	1057
2"	756	1128	1346	1350	1329	1286	1372	1389	1209	1023	846
1"	515	666	769	760	731	735	820	760	693	606	584
0"	466	528	511	580	545	545	602	558	532	488	515

FIGURE 5. 2-GALLON/HOUR BURNER TEMPERATURE PROFILE

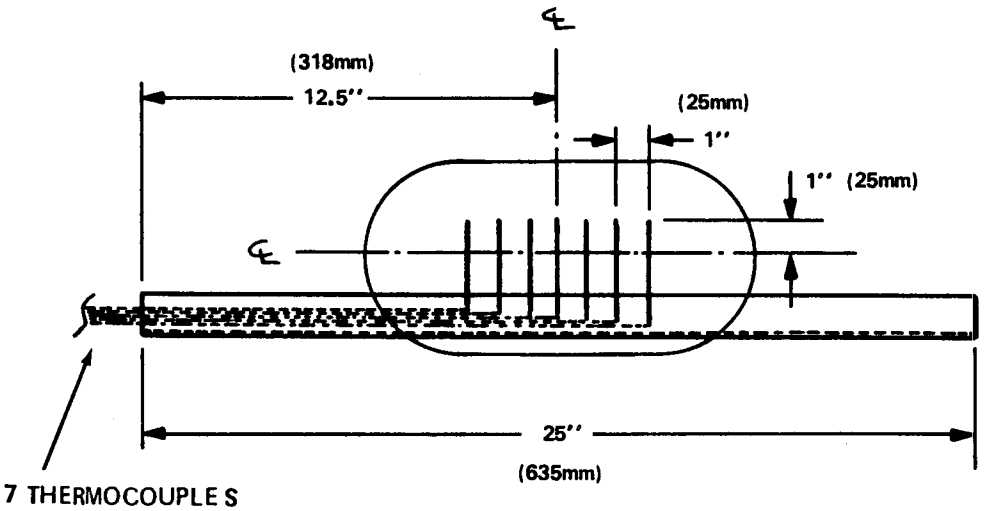

SIDE VIEW

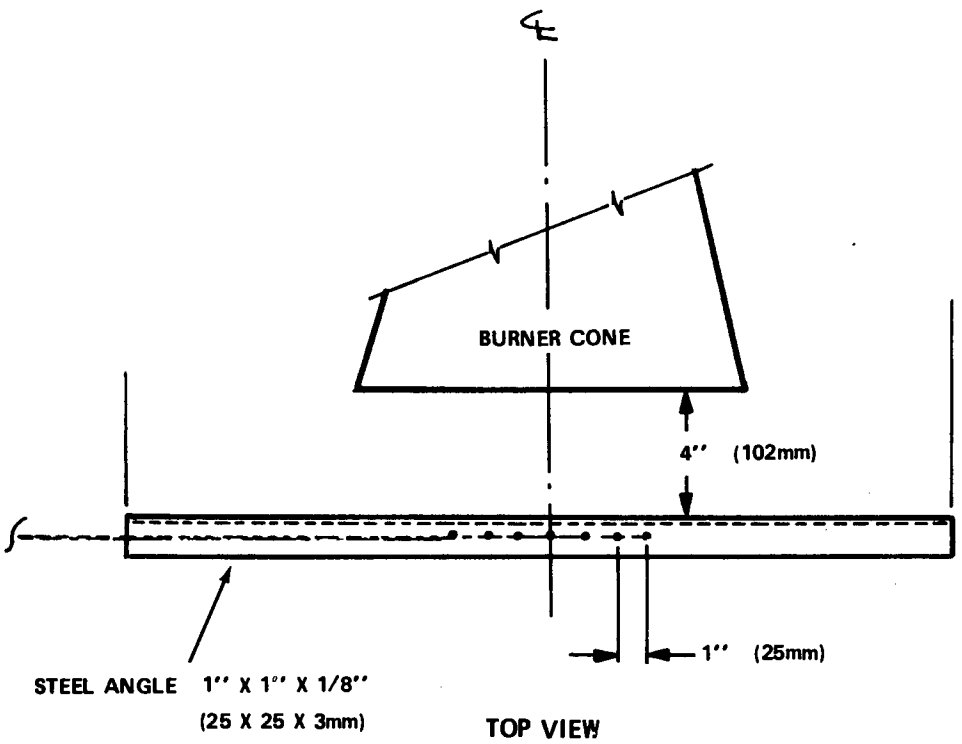

TOP VIEW

83-44

THERMOCOUPLE RAKE BRACKET (SERIES ONE – VERTICAL SAMPLE MOUNTING)

NOTE: BRACKET WAS CLAMPED TO TEST STAND, THERMOCOUPLES OFF–CENTER OF BURNER CONE BY ONE INCH

FIGURE 6. THERMOCOUPLE RAKE BRACKET (SERIES ONE)

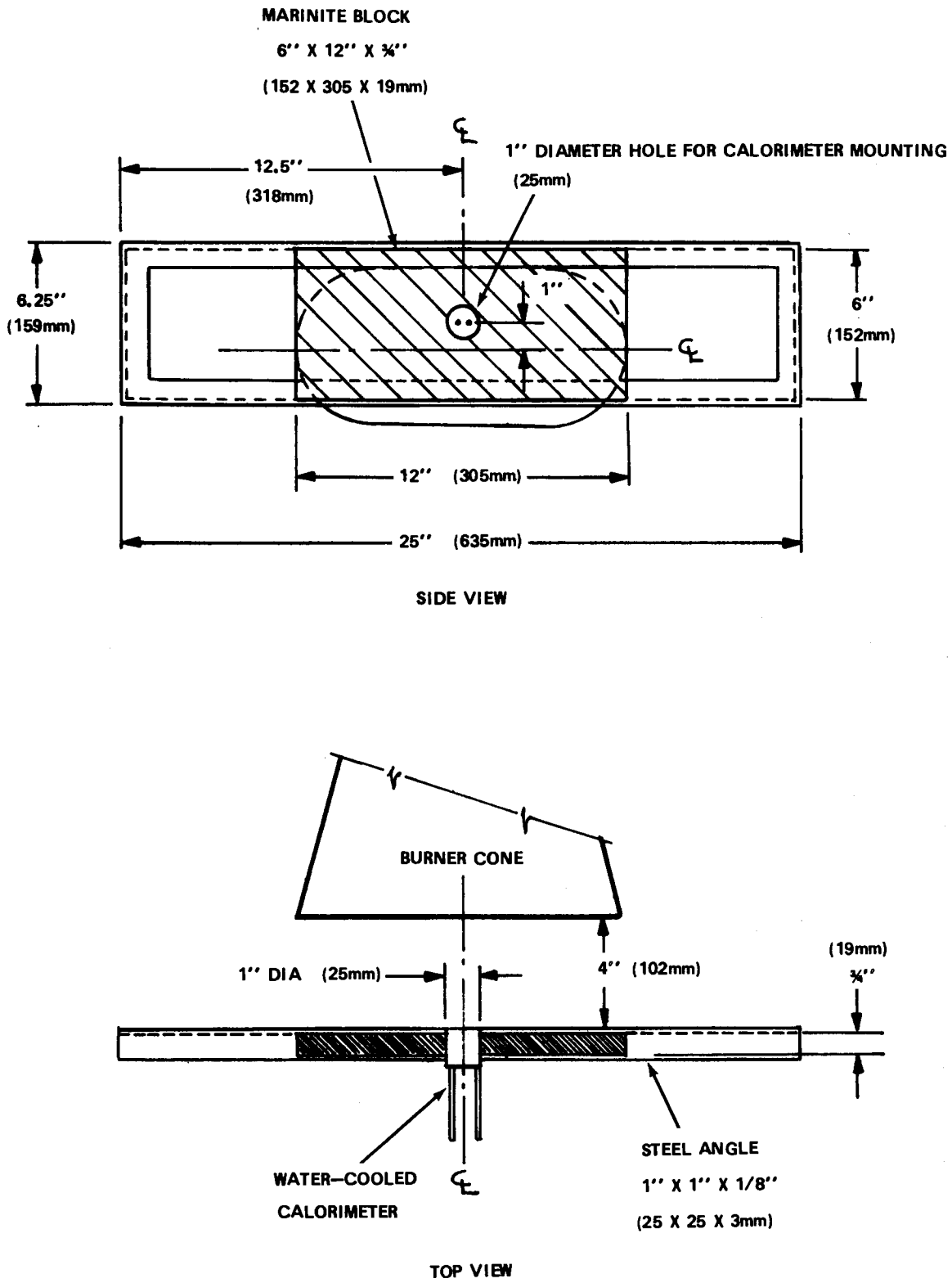

CALORIMETER BRACKET (SERIES ONE – VERTICAL SAMPLE MOUNTING)

83-44

NOTE: BRACKET WAS CLAMPED TO TEST STAND, CALORIMETER OFF–CENTER OF BURNER CONE BY ONE INCH

FIGURE 7. CALORIMETER BRACKET (SERIES ONE)

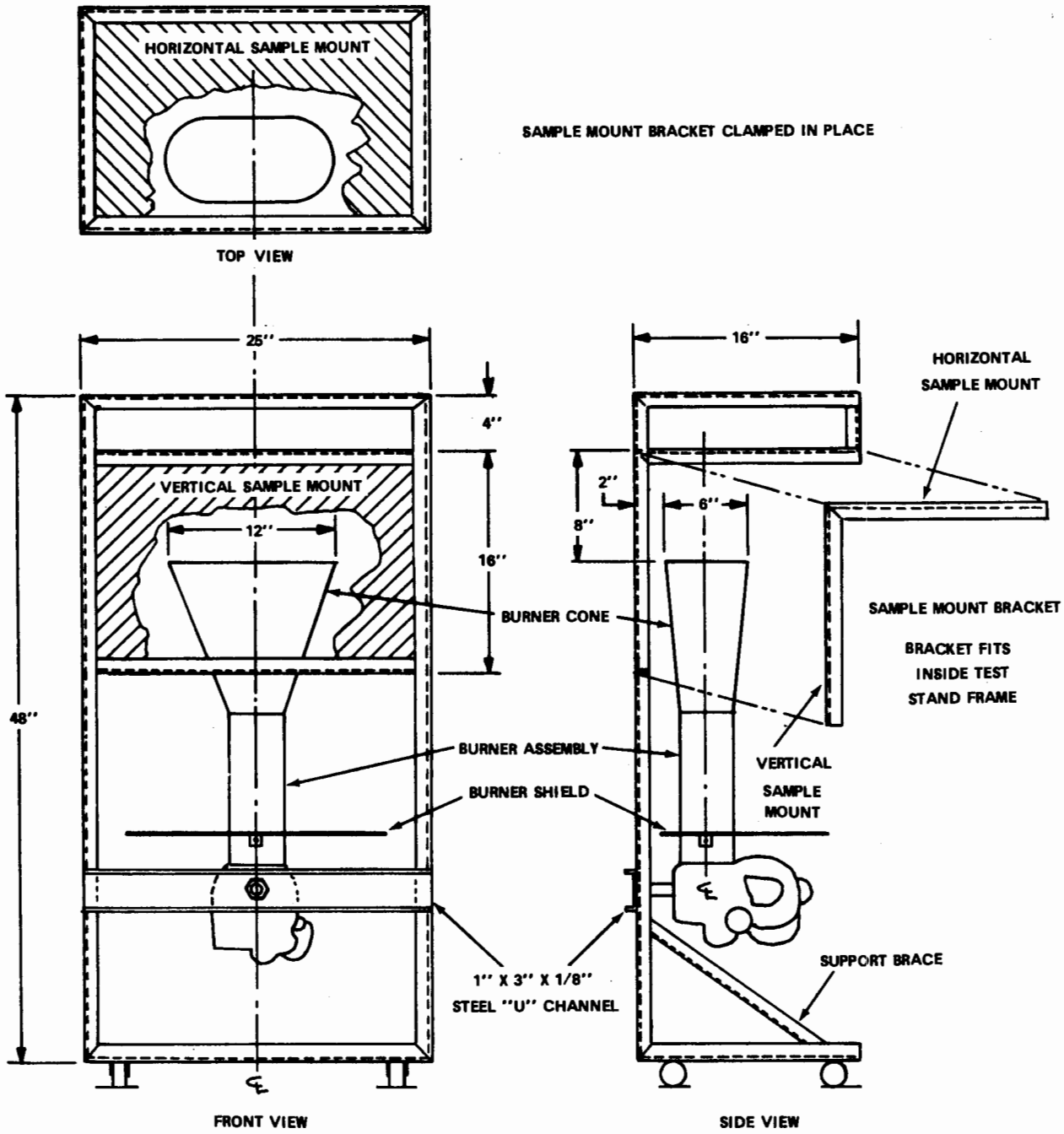

83-44

NOTE: TEST STAND CONSTRUCTED WITH 1" X 1" X 1/8" STEEL ANGLE ALL JOINTS WELDED

FIGURE 8. 2-GALLON/HOUR BURNER WITH HORIZONTAL AND VERTICAL SAMPLE MOUNTING

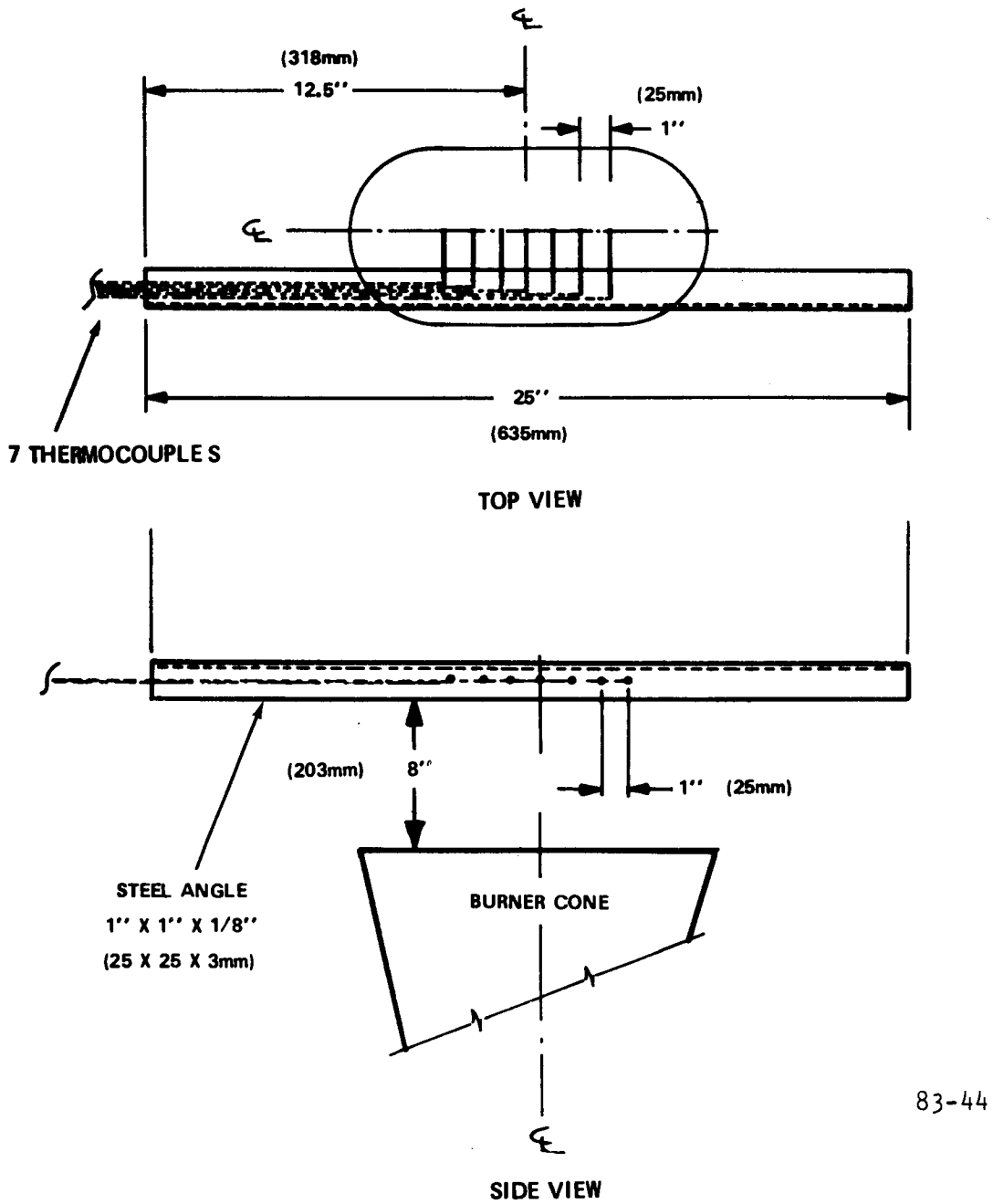

THERMOCOUPLE RAKE BRACKET

(SERIES TWO – HORIZONTAL/VERTICAL SAMPLE MOUNTING)

NOTE: BRACKET WAS CLAMPED TO TEST STAND, THERMOCOUPLES CENTERED OVER BURNER CONE.

FIGURE 9. THERMOCOUPLE RAKE BRACKET (SERIES TWO)

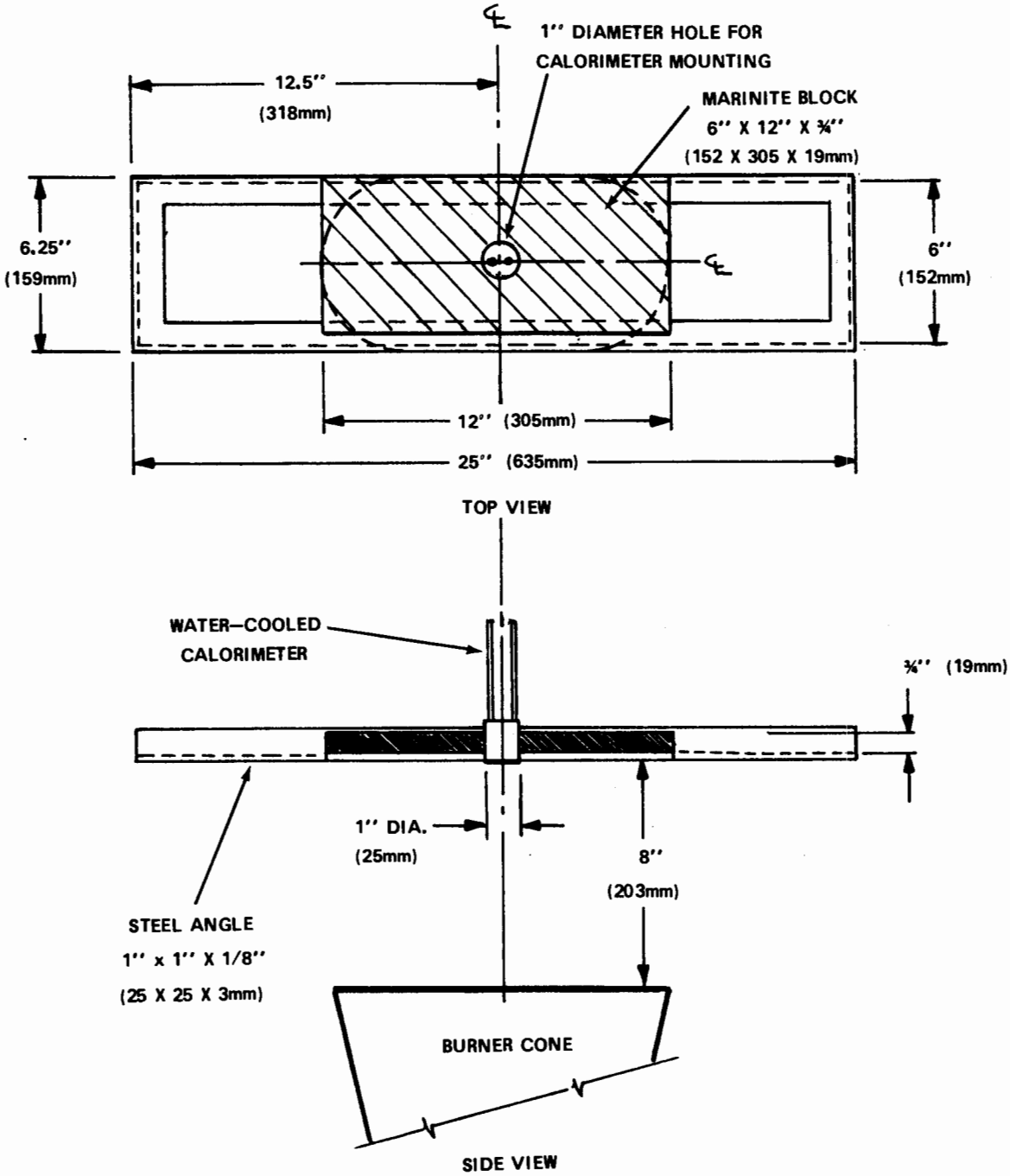

CALORIMETER BRACKET (SERIES TWO – HORIZONTAL/VERTICAL SAMPLE MOUNTING)

NOTE: BRACKET WAS CLAMPED TO TEST STAND, CALORIMETER CENTERED OVER BURNER CONE.

83-44

FIGURE 10. CALORIMETER BRACKET (SERIES TWO)

FIBERGLASS EPOXY

NOMEX EPOXY

FIGURE 11. FIBERGLASS AND NOMEX SAMPLES FROM SERIES ONE

START +10s

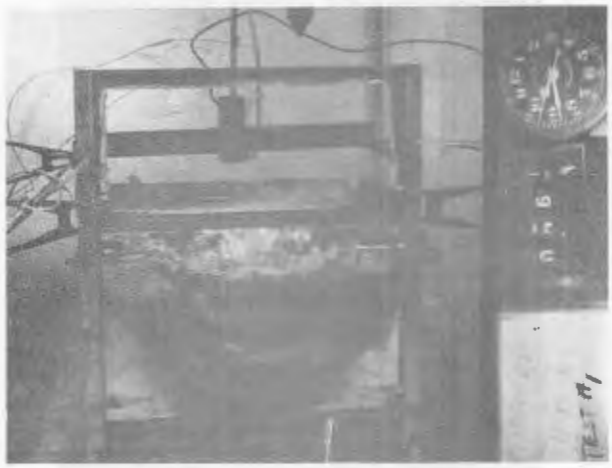

DURING +180s

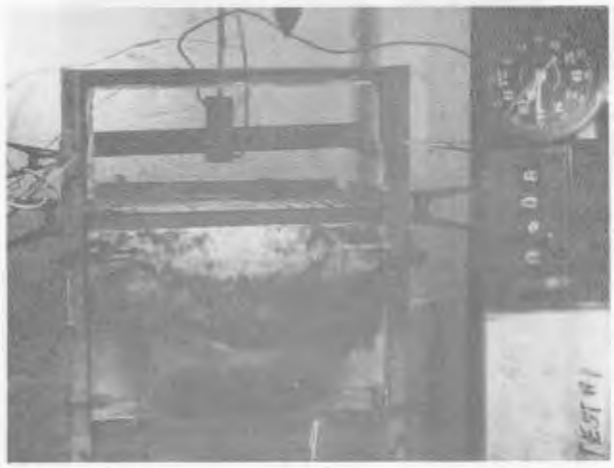

AFTER

FIGURE 12. SERIES TWO - TEST 1 - NONWOVEN FIBERGLASS

START 0s

DURING +210s

AFTER +301s

FIGURE 13. SERIES TWO - TEST 2 - WOVEN FIBERGLASS

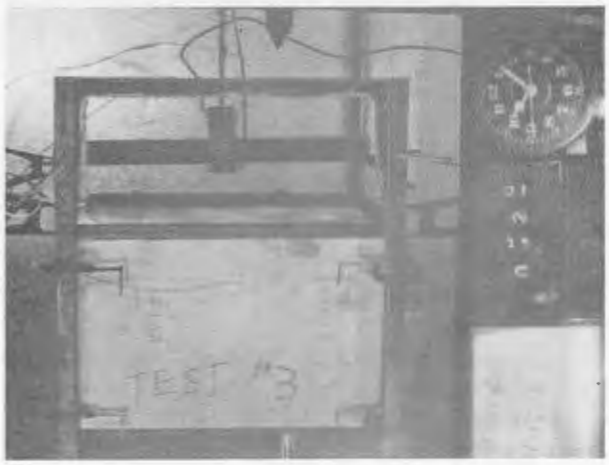

START 0s

DURING +37s

AFTER 299s

FIGURE 14. SERIES TWO - TEST 3 - WOVEN FIBERGLASS TOP AND NOMEX™ SIDE

START +12s

DURING +20s

AFTER +46s

FIGURE 15. SERIES TWO - TEST 4 - NOMEX™

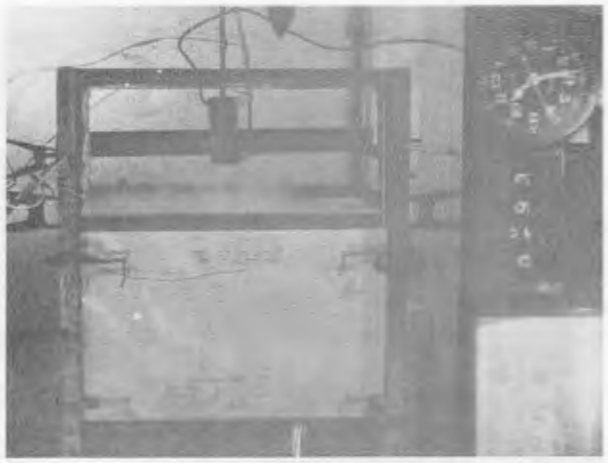

START +2s

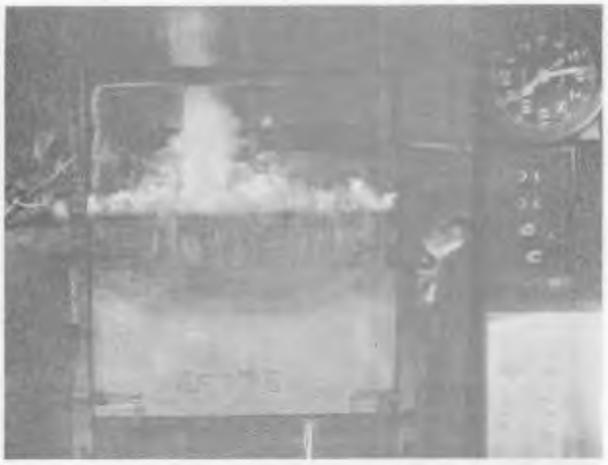

DURING +15s

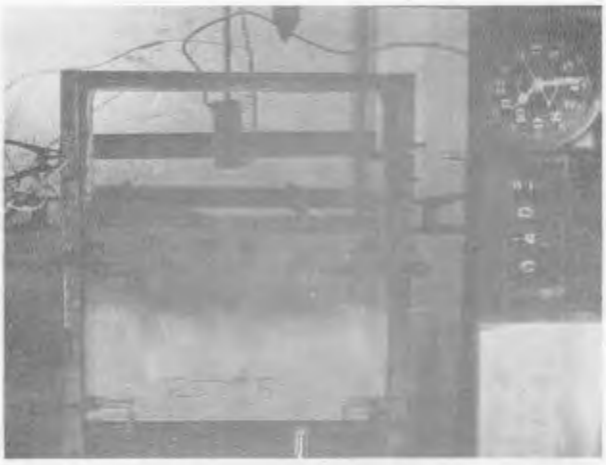

AFTER +31s

FIGURE 16. SERIES TWO - TEST 5 - KELVAR™

START +0s

DURING +24s

AFTER +60s

FIGURE 17. SERIES TWO - TEST 6 - KEVLAR™

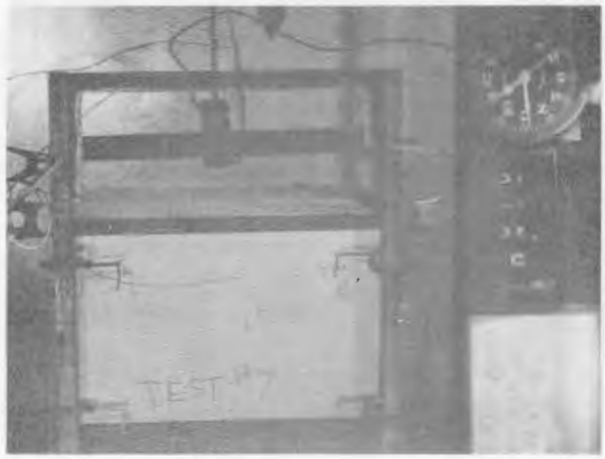

START +8s

DURING +27s

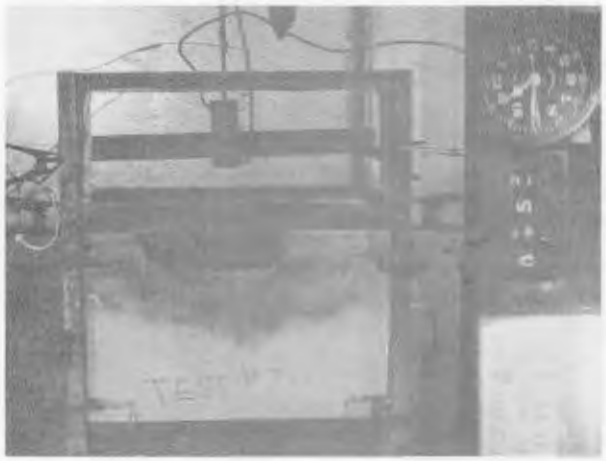

AFTER +88s

FIGURE 18. SERIES TWO - TEST 7 - KELVAR™

APPENDIX A

LIST OF MATERIALS TESTED

MATERIAL DESCRIPTION	THICKNESS (INCHES)/ WEIGHT (OZ/YD2)	AIRCRAFT	COMPARTMENT CLASS
Nomex/Epoxy	0.027 / 26.5	L-1011	C,D
Woven Fiberglass/Epoxy	0.034 / 47.0	L-1011	C,D
Nonwoven Fiberglass/Epoxy	0.020 / 26.4	DC-10	C,D
Kevlar/Epoxy	0.020 / 14.9	B-767	C
Kevlar/Epoxy	0.042 / 47.5	B-757	C
Kevlar/Epoxy	0.017 / 14.4	B-757	C
Kevlar/epoxy	0.050 / 47.9	B-767	C

APPENDIX B

2-GALLON/HOUR BURNER SPECIFICATIONS

Fuel Flow - 2.0 Gallons-Per-Hour

Motor - 1/4 H.P. 3450 RPM

Blower Wheel - 3.5 X 5.25 Inches

Pump - Single Stage

Tube Extension - 4.125 X 11 Inches

Heat Flux - 10.0 Btu/ft^2-s. Measures with a Thermogage Calorimeter (reference 4)

Heat Transfer to 1/2-Inch Copper Tube - 4500 Btu/Hour (reference 3)

The Park Oil Burner used in this study contains a 2.25 galloner-hour 80-degree nozzle operated at a pressure of 85 psig, delivering 2.03-gallons-per-hour. Air pressure in the air tube, or burner tube, was adjusted to produce 0.17 inches of water.

The Park Oil Burner is a suitable replacement for the Lennox Burner and can be obtained from the following address:

Park Oil Burner Mfg. Co.
N. New York Ave. Absecon Blvd.
Atlantic City, New Jersey 08401

Phone: (609) 344-7709