COPY 1
CT 84/21

DOT/FAA/CT-84/21

Suppression and Control of Class C Cargo and Compartment Fires

FEDERAL AVIATION ADMINISTRATION
APR 2 1985
TECHNICAL CENTER LIBRARY
ATLANTIC CITY, N.J. 08405

David R. Blake

February 1985

Final Report

This document is available to the U.S. public through the National Technical Information Service, Springfield, Virginia 22161.

US Department of Transportation
Federal Aviation Administration
Technical Center
Atlantic City Airport, N.J. 08405

NOTICE

This document is disseminated under the sponsorship of the Department of Transportation in the interest of information exchange. The United States Government assumes no liability for the contents or use thereof.

The United States Government does not endorse products or manufacturers. Trade or manufacturer's names appear herein solely because they are considered essential to the object of this report.

Technical Report Documentation Page

1. Report No.	2. Government Accession No.	3. Recipient's Catalog No.
DOT/FAA/CT-84/21		

4. Title and Subtitle	5. Report Date
SUPPRESSION AND CONTROL OF CLASS C CARGO COMPARTMENTS FIRES	February 1985
	6. Performing Organization Code ACT-350
7. Author(s) David R. Blake	8. Performing Organization Report No. DOT/FAA/CT-84/21
9. Performing Organization Name and Address Federal Aviation Administration Technical Center Atlantic City Airport, New Jersey 08405	10. Work Unit No. (TRAIS)
	11. Contract or Grant No.
12. Sponsoring Agency Name and Address U.S. Department of Transportation Federal Aviation Administration Technical Center Atlantic City Airport, New Jersey 08405	13. Type of Report and Period Covered Final August '83 - June '84
	14. Sponsoring Agency Code

15. Supplementary Notes

16. Abstract

A total of 23 fire tests were conducted in a 2357-cubic foot simulated class C cargo compartment. Various lining materials, fire sources, loading configurations, and smoke detectors were used to determine the ability of class C cargo compartments to control fires. The simulated class C cargo compartment did not successfully control the test fires in all cases. The major conclusion of this study is that the 45° bunsen burner test specified in FAR 25.855 does not assure that cargo liners will not burn through when subjected to realistic fires.

17. Key Words	18. Distribution Statement
Class C Halon 1301 Burn-through	Document is available to the U.S. public through the National Technical Information Service, SPringfield, VA 2161

19. Security Classif. (of this report)	20. Security Classif. (of this page)	21. No. of Pages	22. Price
Unclassified	Unclassified	31	

Form DOT F 1700.7 (8-72) Reproduction of completed page authorized

ACKNOWLEDGEMENTS

The author would like to thank the following people for their assistance in the fabrication and instrumentation of the test article, conducting of tests, and in the preparation of the final report: Lou Brown, Charlie Cole, Joe Cox, Madeline Concepcion, Jim Dailey, Leroy Dickerson, Don Eastes, Larry Fitzgerald, Ross Glidewell, Dick Hill, Dick Johnson, George Johnson, Jim Leach, Scott Owen, Gus Sarkos, Roy Schoberle, and Chris Young.

TABLE OF CONTENTS

	Page
EXECUTIVE SUMMARY	vii
INTRODUCTION	1
Purpose	1
Background	1
DISCUSSION	2
Test Article	2
Extinguishing System	2
Smoke Detection	3
Instrumentation	3
Test Series	3
Test Results and Analysis	7
SUMMARY OF RESULTS	9
CONCLUSIONS	11
REFERENCES	11
APPENDIX	
A — Cargo Compartment Classification FAR 25.857 Classes A through E	

LIST OF ILLUSTRATIONS

Figure		Page
1	DC-10 Aft Cargo Compartment	12
2	Cabin Ventilation System	13
3	Cargo Ventilation System	14
4	Cargo Compartment Leakage Duct	15
5	Fire Extinguishing System	16
6	Smoke Detection System	17
7	Instrumentation Location End View	18
8	Instrumentation Location Side View	19
9	Instrumentation Location Top View	20
10	Temperature Above and Below Kevlar Ceiling Liner	21
11	Temperature Above and Below Fiberglass Ceiling Liner	22
12	Halon Concentration	23
13	Smoke Density in Cabin, Tests 9 and 11	24
14	Smoke Density in Cabin, Tests 17 and 20	25

LIST OF TABLES

		Page
1	Summary of Tests	4
2	Smoke Density in Compartment	10

EXECUTIVE SUMMARY

The purpose of this project was to evaluate the ability of class C cargo compartments to suppress and control cargo fires. It was determined in previous work that class D cargo compartments with good fire barrier liners could contain baggage fires. As a result of that work, a more severe test method was proposed to evaluate the burn-through resistance of class D cargo liners. Class D cargo compartments depend on the limited availability of oxygen through restrictions on volume and leakage rates to suppress any fires that are likely to occur. The liners used in class D cargo compartments must be able to maintain their integrity after exposure to direct flame impingement for several minutes before oxygen starvation reduces the flaming combustion to a smoldering state.

Class C cargo compartments are generally larger than class D compartments and detection and suppression systems are required. The liners used in these cargo compartments must also maintain their integrity after exposure to direct flame impingement for up to several minutes before detection occurs and the suppression system is discharged. In this case, the integrity of the liners is important to limit the mixing of cabin exhaust air with the air in the cargo compartment. Failure to do this could result in a concentration of Halon that would be insufficient to suppress the fire for the length of time required during aircraft certification. Some of the cargo liners used in class C cargo compartments do not pass the more severe proposed test. This study was undertaken to determine if the liners used in class C cargo compartments need to demonstrate the same high burn-through resistance as class D cargo liners.

Twenty-three fire tests were conducted in the 2357-cubic foot class C cargo compartment. The test variables included the cargo lining material, fire source, loading configuration and smoke detectors. The cargo liners used in these tests passed the vertical and 45° flammability requirements of FAR 25.853 and FAR 25.855 but not all of the liners passed the more severe test proposed for class D cargo lining material.

One of the major conclusions of this study is that the test method specified in FAR 25.855 does not assure that class C cargo liners will not burn through when subjected to realistic fires. In addition, class C cargo compartments are not effective at controlling fires after a liner burn-through has occurred. Another major finding is that the smoke detection system used did not always give an early warning of fire and subsequently gave false indications of the level of smoke in the compartment.

INTRODUCTION

PURPOSE.

The objective of this project was to experimentally determine the effectiveness of contemporary class C cargo compartment designs in suppressing and containing cargo fires. It was determined in previous work that class D cargo compartments with good fire barrier liners could contain baggage fires (reference 1). As a result of that work, a more severe test method was proposed to evaluate the burn-through resistance of class D cargo liners (reference 2). Class D liners that did not pass this test did not successfully contain cargo fires in all cases. Some of the cargo liners used in class C cargo compartments did not pass that proposed test. This study was undertaken to determine if the liners used in class C cargo compartments need to demonstrate the same high level of burn-through resistance required of class D cargo liners.

BACKGROUND.

The majority of the cargo compartments on United States (U. S.) wide body transport aircraft are certified as class C compartments. They range in volume from 735 to 6200 cubic feet. The requirements for certification of cargo compartments are listed in appendix A. Basically, class C compartments are required to have smoke detectors and fire suppression systems as well as the ability to control ventilation. The smoke detectors currently used are the photoelectric type. These are activated when smoke particles scatter a beam of light onto a photocell to trigger an alarm. The alarm usually consists of both an aural tone and warning lights in the cockpit.

The typical crew procedure, in the event of an alarm, is to manually select the cargo compartment for discharge, shut off any forced ventilation into that compartment and then manually discharge the suppression agent. On some aircraft, the selection of the cargo compartment for discharge will automatically shut off any forced ventilation into that compartment. Dual smoke detectors are commonly used to prevent false alarms. Both detectors must signal the presence of smoke before action is taken by the flight crew. Each detector is required to have a test circuit, controllable from the cockpit to confirm the functioning of the detectors. The time from the activation of cargo smoke alarm until agent discharge varies with crew reaction time and the emergency procedures of the particular aircraft. The fire suppression systems use Halon 1301 as the agent. The initial discharge bottle holds the amount of agent necessary to provide a concentration of five percent in an empty cargo compartment. A backup bottle of agent is also provided and is used to maintain a concentration of at least three percent in the compartment for up to one hour after the initial bottle has been discharged. The performance of the suppression system is verified by flight tests during the aircraft certification process. The cargo liners used in class C compartments must meet the vertical self-extinguishing and 45° burn through tests specified in FAR 25.853 (b) and FAR 25.855 (a-1).

DISCUSSION

TEST ARTICLE.

The test article was the aft section of a DC-10-30CF fuselage between stations 1460 and 1980. The bulkhead that separated the center cargo compartment and the aft bulk cargo compartment was removed to give one lower cargo compartment with a volume of 2357 cubic feet. Figure 1 shows the shape and dimensions of the cargo compartment. Existing cargo liners were removed and replaced with galvanized steel. Aircraft cabin flooring was installed in the overhead cabin. The ends of the fuselage were capped off with aluminum structure and all unnecessary doors and windows were sealed. Access doors were fabricated for the cabin and cargo compartment. Ventilation was supplied to the cabin through two 10-inch diameter perforated ducts that were installed near the ceiling of the cabin and ran the length of the fuselage. Air was forced through these ducts during testing at the rate of 1850 cubic feet per minute (CFM) which provided approximately one air change every four minutes. This air flowed out of the cabin through openings along the sides of the cabin floor, down around the cargo compartment and exited through an outflow valve located in the aft section of the fuselage, under the cargo compartment floor. A system consisting of a fan, valve, and ducting was installed in the cheek area of the test article. This system was used to force air into the cargo compartment at 260 CFM and simulated a heating and ventilation system used on some airplanes. This heating and ventilation system is sometimes referred to as a pet air system and is used to provide an environment suitable for the transportation of live animals. The leakage rate from the cargo compartment was controlled by a perforated duct in the compartment leading to a valve and a calibrated orifice mounted outside the test article. This system was used to raise the leakage rate from the compartment to 80 CFM which was the leakage rate measured from an in-service class C cargo compartment of comparable size. Figures 2, 3, and 4 illustrate the ventilation systems used. The leakage and ventilation rates in the test article cargo compartment were determined by filling the compartment with either carbon dioxide or halon and measuring the rate of decay of the extinguishing agent concentration. This was then equated to a leakage rate (reference 3).

EXTINGUISHING SYSTEM.

The extinguishing system consisted of three rechargable Halon 1301 fire bottles connected to a manifold that ran down the centerline of the fuselage between the cargo ceiling liner and the cabin floor. Halon was discharged into the cargo compartment at ceiling level through five nozzles connected to the manifold. Figure 5 illustrates the extinguishing system. The initial discharge of Halon was accomplished by simultaneously firing two of the fire bottles which contained 25 pounds of extinguishing agent each. This amount of agent would produce an initial concentration of five percent by volume in the empty test article. The third fire bottle also contained 25 pounds of extinguishing agent and was used as the backup charge. This backup charge was fired, when necessary, 54 minutes after the initial discharge. This was the time, determined by testing, that the concentration of Halon from the initial discharge would drop below 3 percent. Discharge nozzles connected to the facility extinguishing system were installed in the cabin and cargo compartment for test article protection.

SMOKE DETECTION.

An air sampling, smoke detection system was installed in the test article. It consisted of four pickup ports on the centerline of the cargo compartment, two inches below the ceiling liner. The facility vacuum system was used to draw air from these pickup ports through the smoke detectors. Figure 6 illustrates the smoke detection system. Two photoelectric detectors were used for all tests. It was these detectors that determined the time that airflow into the compartment was reduced and the suppression agent was discharged. Two ionization detectors were added to the system for tests 5 through 21 for comparison purposes. A new smoke detection system was fabricated for tests 22 and 23. New tubing was installed and the number of pickup ports was increased to 6. New detectors were also installed for these tests.

INSTRUMENTATION.

A total of forty-five chromel/alumel thermocouples were installed throughout the test article. Twenty-three of these were evenly spaced in the cheek area and in the area between the cargo ceiling liner and the cabin flooring. These were used to record temperatures outside of the cargo compartment and to help determine the time of burn-through, should it occur. The remaining twenty-two thermocouples were positioned throughout the cargo compartment.

Four smoke meters consisting of a collimated light beam incident upon a photocell were installed in the test article. One of these was in the center of the cargo compartment approximately one foot below the ceiling liner. The three additional smoke meters were installed in the upstairs cabin at heights of 32 inches, 64 inches, and 96 inches above the cabin floor.

The Halon 1301 concentration in the cargo compartment was measured at two different locations using two Beckman Model 865 Infrared analyzers. A sampling system was used to enable the concentration to be measured at four different heights at the two locations. Each height was measured for one minute before proceeding to the next height. This cycling continued for the duration of the test.

The oxygen concentration in the cargo compartments was measured with a Beckman OM11EA Oxygen analyzer. The sampling point was in the center of the cargo compartment at a height of four feet. Figures 7, 8, and 9 show the location of the instrumentation in the test article.

TEST SERIES.

A total of 23 fire tests were conducted in the 2357-cubic foot cargo compartment of the test article. Tests were conducted using galvanized steel, fiberglass/polyester, and Kevlar/epoxy cargo lining materials. Table 1 gives a summary and brief description of the 23 tests.

The fire-load for tests 1 through 12 consisted of a cloth gym bag filled with rags, newspaper, and matches. This was set in among a variety of types of suitcases filled with clothes. The matches in the gym bag were ignited with Nichrome wire to start the test. The fire-load for tests 13 and 14 consisted of cardboard boxes filled with packing foam, newspaper, and matches and placed inside an aluminum LD-3 cargo container with a polyester/PVC door covering. The matches were ignited with Nichrome wire. Tests 15 through 23 used a fire-load similar to the ones used

TABLE 1. SUMMARY OF TESTS

TEST No.	LINER	SMOKE (SECS) DETECTION	FIRE LOAD	COMMENTS
1	Galvanized Steel	71	Cloth bag with rags, newspaper and matches	Initial Halon discharge extinguished fire
2	Galvanized Steel	87	same	Fire was suppressed but not extinguished
3	Galvanized Steel	25	same	Initial Halon discharge extinguished fire
4	Galvanized Steel	85	same	Fire was suppressed but not extinguished
5	Fiberglass 13 mil ceililng	206	same	Fire was suppressed but not extinguished
6	Fiberglass 13 mil ceiling	173	same	Fire was suppressed but not extinguished
7	Kevlar 11 mil ceiling	100	same	Initial Halon discharge extinguished fire.
8	Kevlar 11 mil ceiling	112	same	Fire was suppressed but not extinguished
9	Kevlar 11 mil ceiling	99	same	Delayed Halon firing for one minute after detection. Large hole burned in liner. Open flaming in compartment after 40 minutes, Second Halon discharge did not suppress fire.
10	Kevlar 11 mil ceiling	76	same	Delayed Halon firing for one minute after detection. Large hole burned in liner. Fire continued to smolder but no flames were observed
11	Fiberglass 13 mil ceiling	59	same	Delayed Halon firing for one minute after detection. Fire was suppressed but not extinguished.

TABLE 1. SUMMARY OF TESTS (Continued)

12	Kevlar 17 mil ceiling 27 mil sidewall	162	same	Delayed Halon firing for one minute after detection. Fire was suppressed but not extinguished. No burn through.
13	Kevlar 11 mil ceiling	250	Box filled with foam, newspaper and matches inside cargo container.	Fire was contained in aluminum LD-3 with polyester /PVC door covering
14	Kevlar 11 mil ceiling	119	Box filled with foam, newspaper and matches inside cargo container	Fire burned through polyester/PVC door covering at about the same time as detection. Halon suppressed the fire. No liner burn through
15	Kevlar 17 mil ceiling	214	Cloth bag with rags, newspaper and matches and 1/5 gallon of rum	Smoke and flames were visible in overhead cabin before detection so Halon was fired early, at 145 seconds. Halon suppressed the fire.
16	Kevlar 17 mil ceiling	119	same	Fire burned through liner at approximately the same time as detection. Fire was suppressed but not extinguished.
17	Kevlar 17 mil ceiling	93	same	Fire burned through liner at aproximately the same time as detection. New detectors were used for this test. Open flaming in compartment at 80 minutes. Flames visible in cabin
18	Fiberglass 13 mil ceiling	178	same	Fire was suppressed but not extinguished. Some smoke in cabin.

TABLE 1. SUMMARY OF TESTS (Continued)

19	Fiberglass 13 mil ceiling	185	cloth bag with rags, newspaper, matches and one quart methyl alcohol.	First Halon discharge extinguished fire.
20	Fiberglass 13 mil ceiling	140	same	First Halon discharge extinguished fire.
21	Fiberglass 13 mil ceiling	10	boxes, suitcases	Incendiary device in suitcase. First Halon discharge extinguished fire.
22	Kevlar 17 mil ceiling	58	cloth bag with rags, newspaper, matches, and one quart methyl alcohol.	Fire was suppressed but not extinguished. No burn through
23	Kevlar 17 mil ceiling	186	same as 22, except bag zipped close	Fire was suppressed but not extinguished. No burn through.

in tests 1 through 12. The only difference was the addition of a small quantity of flammable liquid. One fifth of a gallon of 151-proof rum was used in tests 15 through 18 and one quart of methyl alcohol was used in tests 19 through 23. This liquid was put in plastic bags inside the gym bag and was arranged to rupture at the start of the test. This was done to simulate the potentially damaging type of cargo fire that ignites quickly with very little smoke initially. A partially loaded cargo compartment was simulated by filling approximately forty percent of the compartment volume with cardboard boxes filled with packing foam. These boxes were only used to displace the air in the compartment and were not involved in any fires. Galvanzied steel, 0.013-inch fiberglass/polyester and 0.011-inch and 0.017-inch Kevlar/epoxy ceiling liners were used in the tests. These liners were installed in a section of the ceiling, covering an area approximately 72 inches by 90 inches with the fire source centered under that section. Test 12 also used a 0.027-inch Kevlar/epoxy sidewall liner in addition to the ceiling liner. The fire for test 12 was ignited approximately one foot away from the cargo compartment sidewall, adjacent to the Kevlar/epoxy test section.

The procedure used in these tests was to operate the pet air system at its full capacity of 260 cubic feet per minute at the start of the test. When both photoelectric smoke detectors signaled the presence of smoke, and after a predetermined delay time, the pet air fan was turned off and 50 pounds (lbs) of extinguishing agent was discharged into the cargo compartment. The conditions in the cargo compartment were then monitored for up to two hours. If the fire was not extinguished by the initial agent discharge, the backup bottle of 25 lbs of halon was discharged 54 minutes after the initial discharge.

TEST RESULTS AND ANALYSIS.

The test fires penetrated and burned away sections of ceiling cargo liners in five of the tests conducted.

The following are the test numbers and conditions when the burn-throughs occurred.

TEST 9. The fire was ignited in a cloth bag filled with rags, newspaper, and matches and placed approximately 18 inches below the 0.011-inch thick Kevlar ceiling liner. Halon was discharged into the cargo compartment approximately one minute after the detection of smoke. Approximately 40 minutes after the initial discharge, flaming combustion was visible in the cargo compartment. The backup Halon bottle was discharged at 43 minutes when the overhead cabin filed with smoke and flames were observed coming through cracks in the cabin flooring. The fire melted some of the aluminum structure to which the cargo liners were attached and charred the underside of the cabin flooring. The fire did not burn through the cabin flooring but some flames did come through the cracks where the cabin floor was attached to the seat tracks. There was no combustable materials such as carpets or seats in the cabin that could possibly have ignited. The backup bottle of halon did not suppress the fire. The facility CO2 fire extinguishing system was used to terminate the test at 44 minutes. A hole approximately 40 inches by 28 inches was left in the ceiling liner.

TEST 10. The fire was ignited in a cloth bag filled with rags, newspaper, and matches and placed approximately 18 inches below the 0.011-inch thick Kevlar ceiling liner. Halon was discharged into the cargo compartment approximately one minute after the detection of smoke. The backup halon bottle was discharged 54 minutes after the initial discharge. A hole approximately 31 inches by 20 inches was left in the ceiling liner.

TEST 15. The fire was ignited in a cloth bag filled with rags, newspaper, matches, and one fifth of a gallon of rum and placed approximately 18 inches below the 0.017-inch thick Kevlar ceiling liner. Halon was discharged into the cargo compartment at approximately two and a half minutes when flame and smoke were visible in the cabin. Smoke detection did not occur until approximately three and a half minutes. The initial halon discharge extinguished the fire. A hole approximately 15 inches in diameter was left in the ceiling liner.

TEST 16. The fire was ignited in a cloth bag filled with rags, newspaper, matches, and one fifth of a gallon of rum and placed approximately 18 inches below the 0.017-inch thick Kevlar ceiling liner. Halon was discharged into the cargo compartment approximately 25 seconds after smoke detection. This discharge suppressed the flames but did not extinguish the fire. The backup bottle of halon was discharged 54 minutes after the initial discharge. No flames were observed but the fire continued to smolder. A hole approximately 12 inches in diameter was left in the ceiling liner.

TEST 17. The fire was ignited in a cloth bag filled with rags, newspaper, matches, and one fifth of a gallon of rum and placed approximately 18 inches below the 0.017-inch thick Kevlar ceiling liner. Halon was discharged into the cargo compartment approximately 14 seconds after smoke detection. The backup bottle of Halon was discharged at approximately 56 minutes. At approximately 80 minutes into the test, flaming combustion was visible in the cargo compartment. The test was terminated at 82 minutes with the facility CO_2 extinguishing system. A hole approximately 12 by 18 inches was left in the ceiling liner.

The fiberglass and Kevlar cargo liners used in this test program passed the vertical and 45° bunsen burner tests specified in FAR 25.853 and 25.855. The Kevlar cargo liners did not pass the test proposed in report DOT/FAA/ CT-83/44 (reference 2). This test utilizes a 2-gallon per hour kerosene burner and has been proposed as a new test for class D cargo compartment liners. Using this test, the 0.011-inch and 0.017-inch Kevlar cargo liners burned through in 13 and 15 seconds, respectfully. The 0.013 inch fiberglass was exposed to the burner for 5 minutes with no burn-through.

The effectiveness of the fiberglass and Kevlar cargo liners as fire barriers can be seen in figures 10 and 11. Figure 10 is a plot of the highest temperature measured below and above the Kevlar ceiling liner for test 9. The temperature above the liner exceeded the temperature below the liner, early in the test, as burn-through occurred. Halon was discharged and the fire was suppressed for approximately 40 minutes before it flared up again. The temperature above the liner again exceeded the temperature below the liner when the fire reignited. Figure 11 is a plot of the highest temperature measured below and above the fiberglass ceiling liner for test 18. The temperature below the liner exceeded 1600° F before halon was discharged but the temperature above the liner remained less than 400° for the entire test.

The ability of the Kevlar and fiberglass liners to control drafts and ventilation can be seen in figure 12. That figure is a plot of the halon concentration in the test article versus time. In the test with a Kevlar liner in which burn-through occurred, the halon concentration was maintained above 3 percent for only 20 minutes. In the test with a fiberglass liner, the halon concentration was maintained above 3 percent for approximately 40 minutes.

The ability of the Kevlar and fiberglass liners to limit the amount of smoke introduced into the cabin can be seen in figures 13 and 14. Figure 13 shows that in the test with the Kevlar liner in which burn-through occurred, the smoke in the cabin became dense enough to reduce light transmission to approximately 50 percent of that of clear air. This occurred twice, once during the initial burn-through and again when the fire reignited. In the test with a fiberglass liner, the light transmission in the cabin was reduced to approximately 70 percent of that of clear air. This occurred early in the test and was probably due to the burning of the polyester resin on the back face of the cargo liner. The light transmission in the cabin came back up to near 100 percent in approximately 10 minutes and remained there for the duration of the test. Figure 14 shows the light transmission in the cabin for two additional tests. In the test with the Kevlar liner in which burn through occurred the light transmission in the cabin was reduced to approximately 90 percent but returned to near 100 percent in approximately 5 minutes. In the test with the fiberglass liner the light transmission was reduced by approximately 2 percent and then returned to near 100 percent shortly after. Again, this was probably due to the burning of the polyester resin on the back face of the cargo liner.

The photoelectric smoke detectors were calibrated by the manufacturer to alarm at approximately 93 percent light transmission over 1 foot. One of the requirements of Technical Standard Order (TSO) C1b, which covers the detectors used in cargo compartments is that they detect the presence of smoke at levels between 84 and 96 percent light transmission. Table 2 gives the percent light transmission as measured by the smoke meter at the time the smoke detector alarmed and at the time they dealarmed. This was the level of smoke measured by the smoke meter and was not necessarily the same level of smoke in the smoke detector chamber. On three occasions, the smoke meter measured levels of smoke significantly below the required 84 percent when the smoke detectors alarmed. This occurred in tests 6, 15, and 19. There were 14 tests in which the smoke detectors dealarmed and smoke meter data were available. In 13 of those 14 tests, there was significant levels of smoke in the compartment when the detectors dealarmed. The smoke meter measured light transmission ranging from 26 to 87 percent for those 13 tests at the times that the detectors dealarmed.

SUMMARY OF RESULTS

1. The test fires were not successfully suppressed and controlled in all cases when Kevlar ceiling cargo liners were installed in the test article.

2. The test fires were successfully suppressed and controlled when fiberglass ceiling cargo liners were installed in the test article.

3. The smoke detectors did not alarm for several minutes during many of the tests and dealarmed when there was still significant levels of smoke in the compartment.

4. Smoke was present in the overhead cabin during several tests. This occurred in tests using Kevlar/epoxy liners and in tests using fiberglass/polyester liners. The greatest amount of smoke in the overhead cabin occurred in the tests with Kevlar/epoxy liners in which a burn through occurred.

TABLE 2. SMOKE DENSITY IN COMPARTMENT

TEST	ALARM TIME (SECS)	SMOKE DENSITY AT ALARM (% LIGHT TRANSMISSION)	DE-ALARM TIME (SECS)	SMOKE DENSITY AT DEALARM (% LIGHT TRANSMISSION)
1	71	99	629	47
2	87	93	1065	32
3	25	96	863	60
4	85	96	602	65
5	206	*	/	/
6	173	70	/	/
7	100	99	474	*
8	112	99	/	/
9	99	99	/	/
10	76	99	3460	57
11	59	99	/	/
12	162	90	/	/
13	250	92	/	/
14	119	99	/	/
15	214	62	490	64
16	119	100	2130	53
17	93	96	3430	98
18	178	84	230	26
19	185	66	210	35
20	140	94	180	32
21	10	100	240	72
22	58	99	207	87
23	186	95	270	80

* Smoke meter data not available
/ Detectors did not dealarm

CONCLUSIONS

1. The halon extinguishing system effectively suppressed the initial flames and effectively controlled the fire provided that ceiling liner burn-through did not occur.

2. The smoke detection system did not always give early warning of fire and subsequently gave false indications of the level of smoke in the compartment.

3. The test method specified in FAR 25.855 does not assure that class C cargo liners will not burn through when subjected to realistic fires.

4. Class C cargo compartment detection/extinguishing systems do not effectively control cargo fires after liner burn-through has occurred.

REFERENCES

1. Blake, D. R. and Hill, R. G., Fire Containment Characteristics of Aircraft Class D Cargo Compartments, FAA Technical Report No. DOT/FAA/82-156, March 1983.

2. Brown, L. J. and Cole, C. R., A Laboratory Test for Evaluating the Fire Containment Characteristics of Aircraft Class D Cargo Compartment Lining Material, FAA Technical Report No. DOT/FAA/CT-83/44, Oct. 1983.

3. Eklund, T. I., Analysis of Dissipation of Gaseous Extinguisher Agents in Ventilated Compartments, FAA Technical Report No. DOT/FAA/CT-83/1, May 1983.

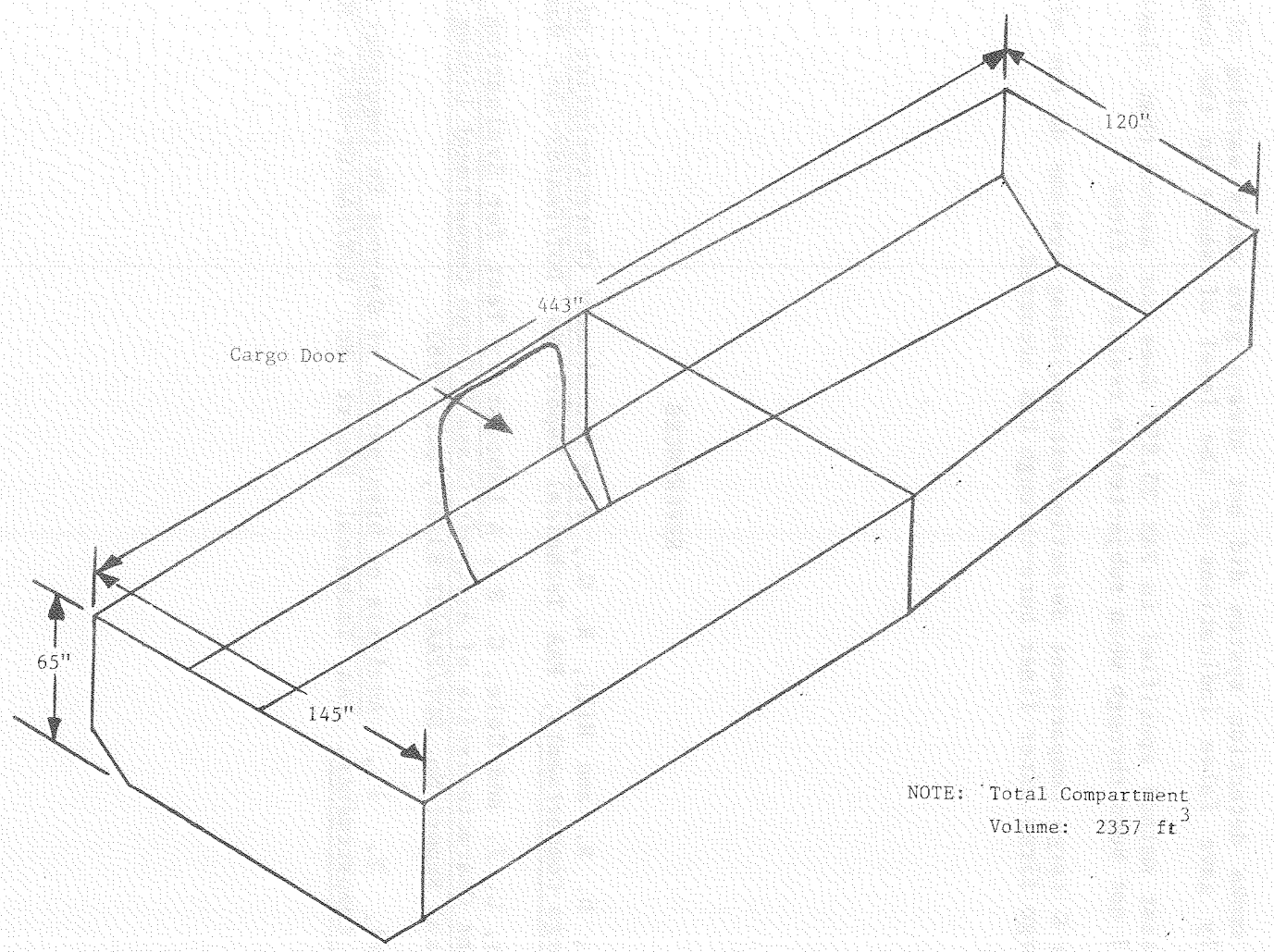

FIGURE 1. DC-10 AFT CARGO COMPARTMENT

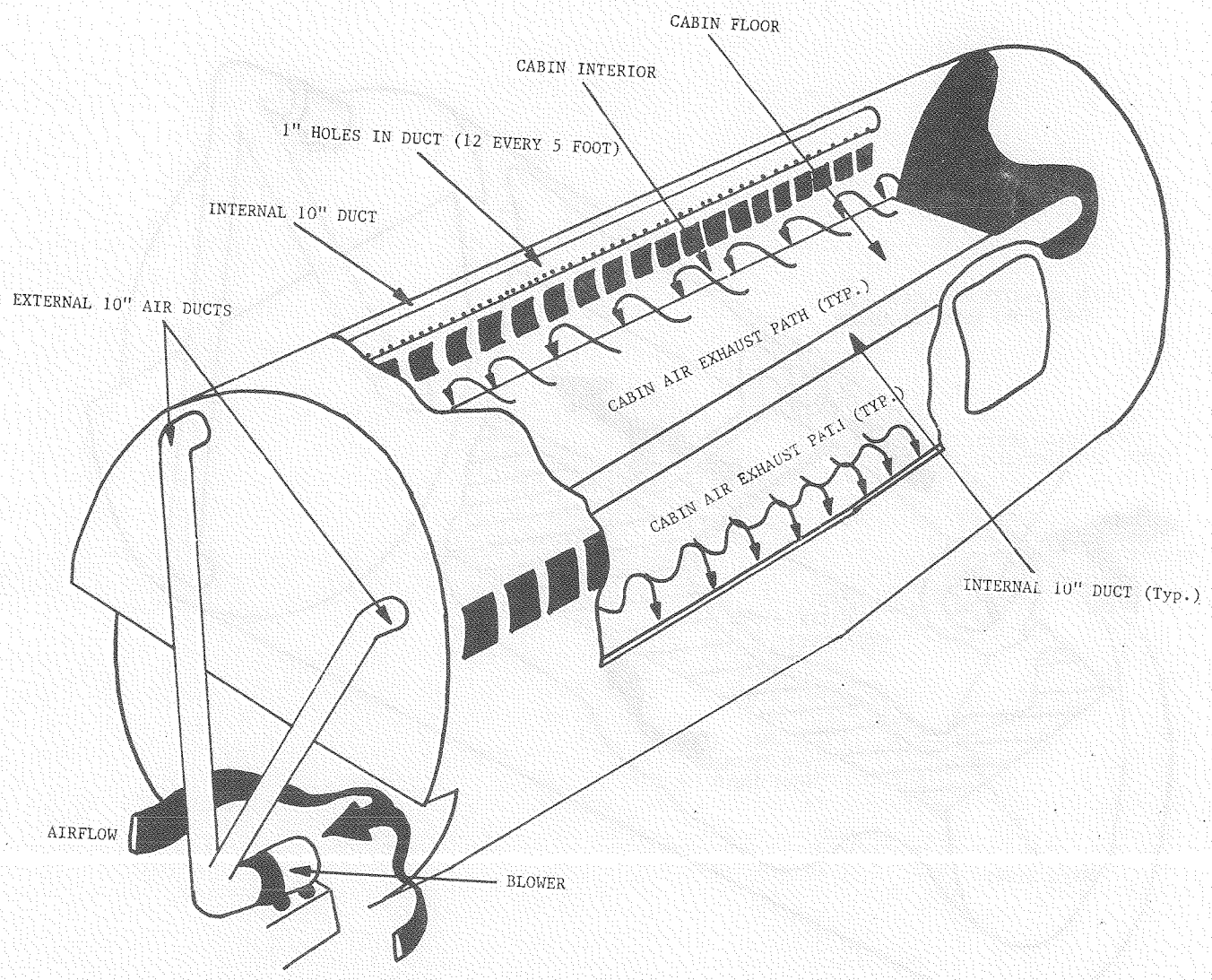

FIGURE 2. CABIN VENTILATION SYSTEM

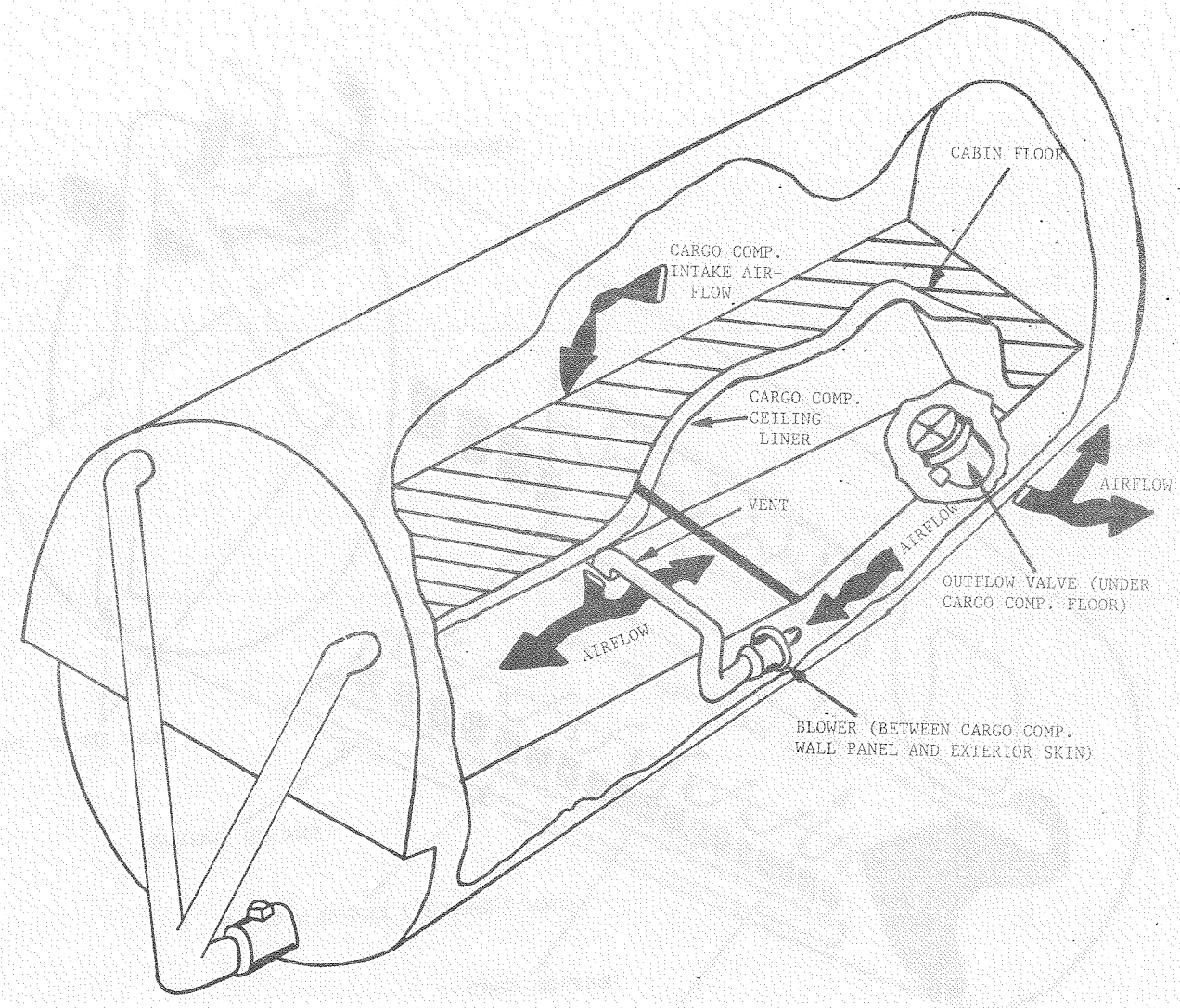

FIGURE 3. CARGO VENTILATION SYSTEM

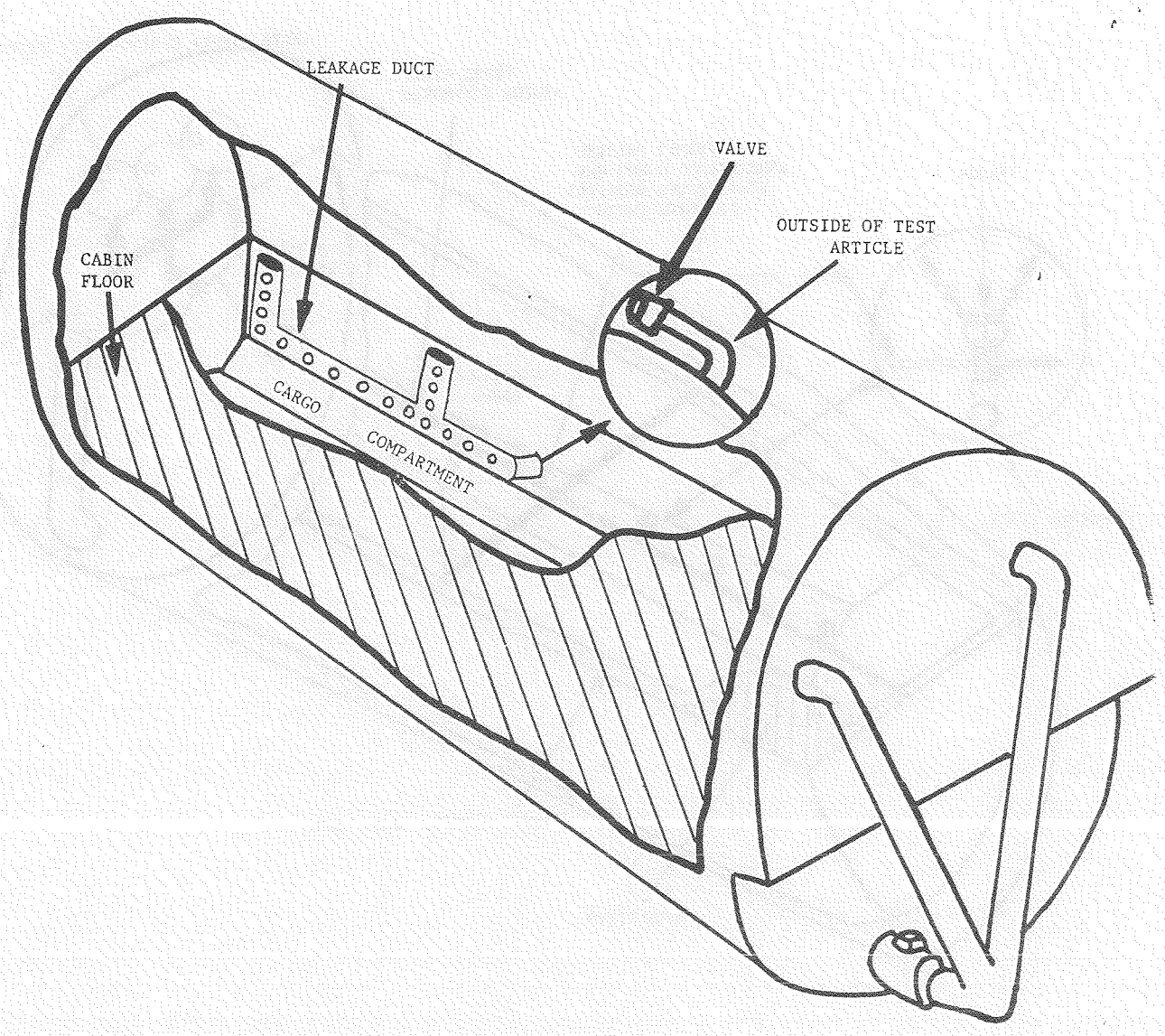

FIGURE 4. CARGO COMPARTMENT LEAKAGE DUCT

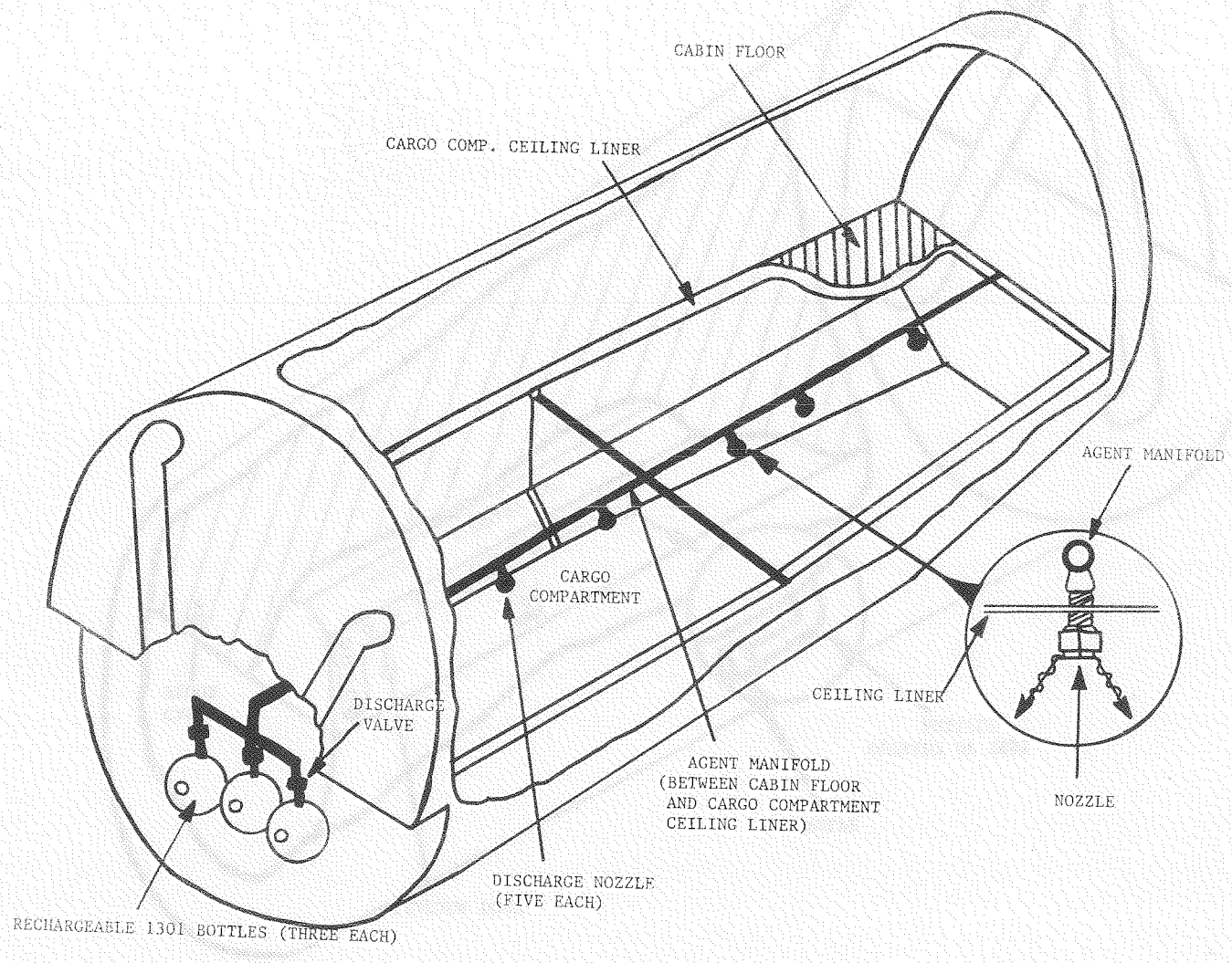

FIGURE 5. FIRE EXTINGUISHING SYSTEM

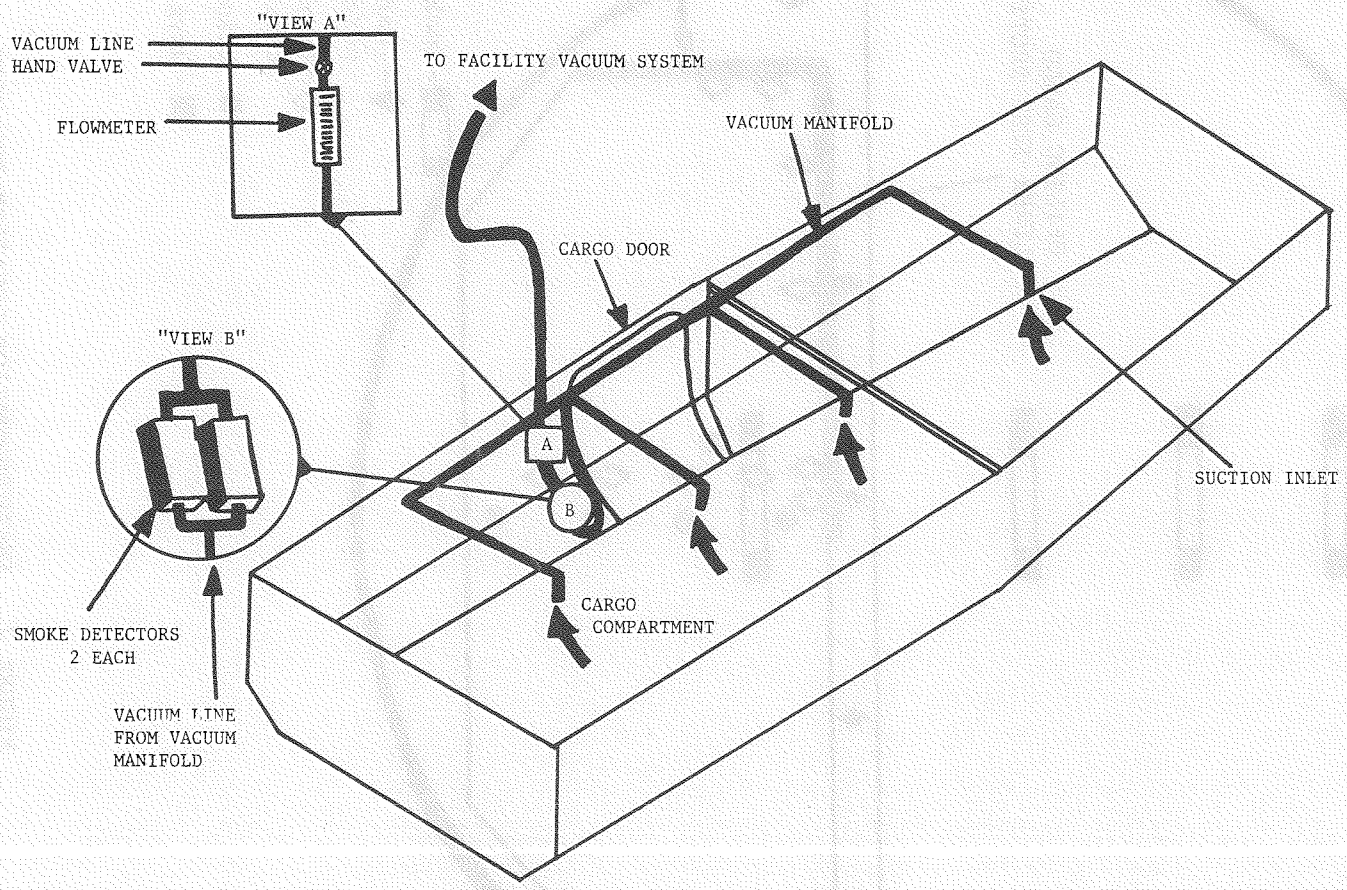

FIGURE 6. SMOKE DETECTION SYSTEM

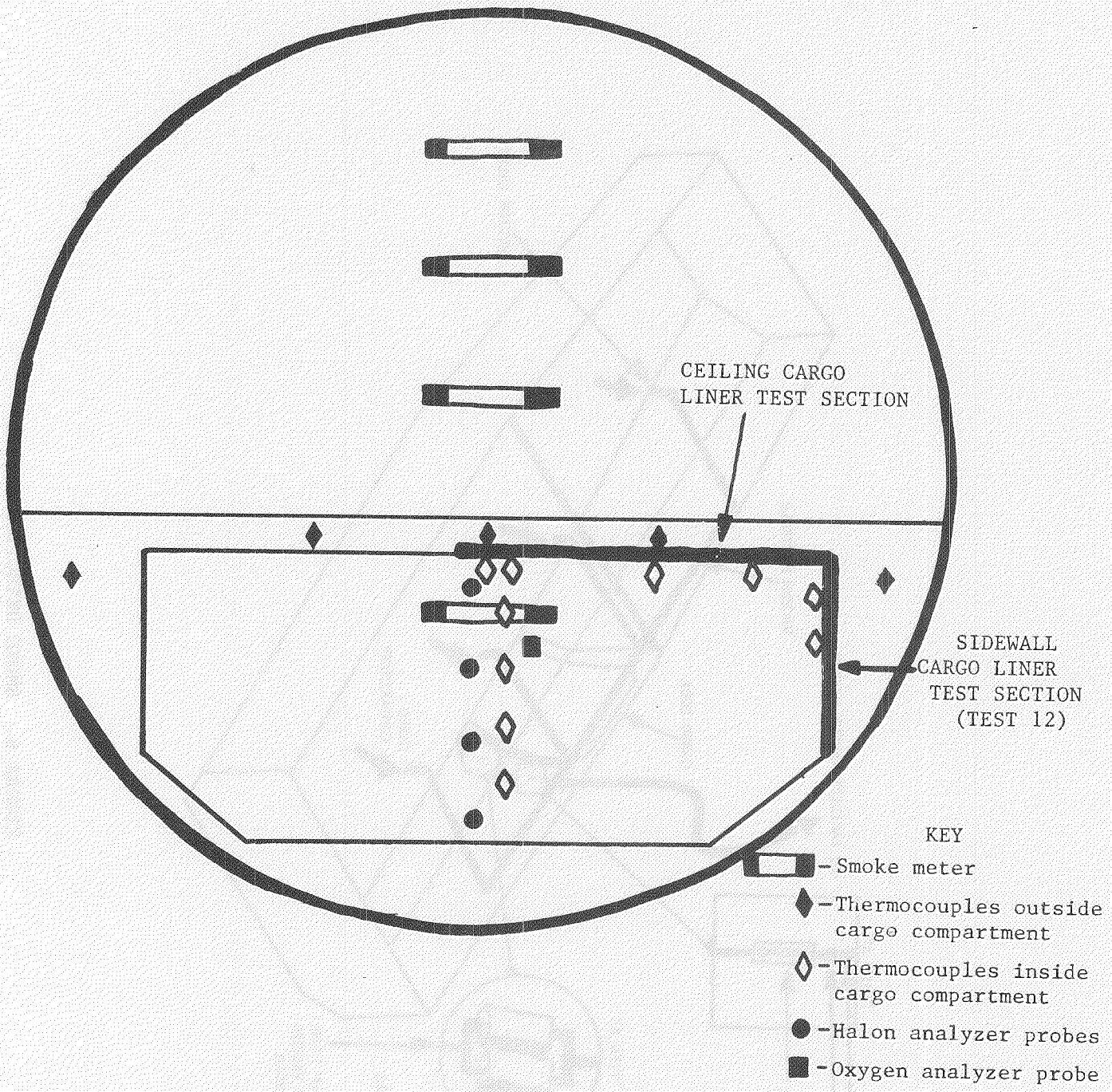

FIGURE 7. INSTRUMENTATION LOCATION END VIEW

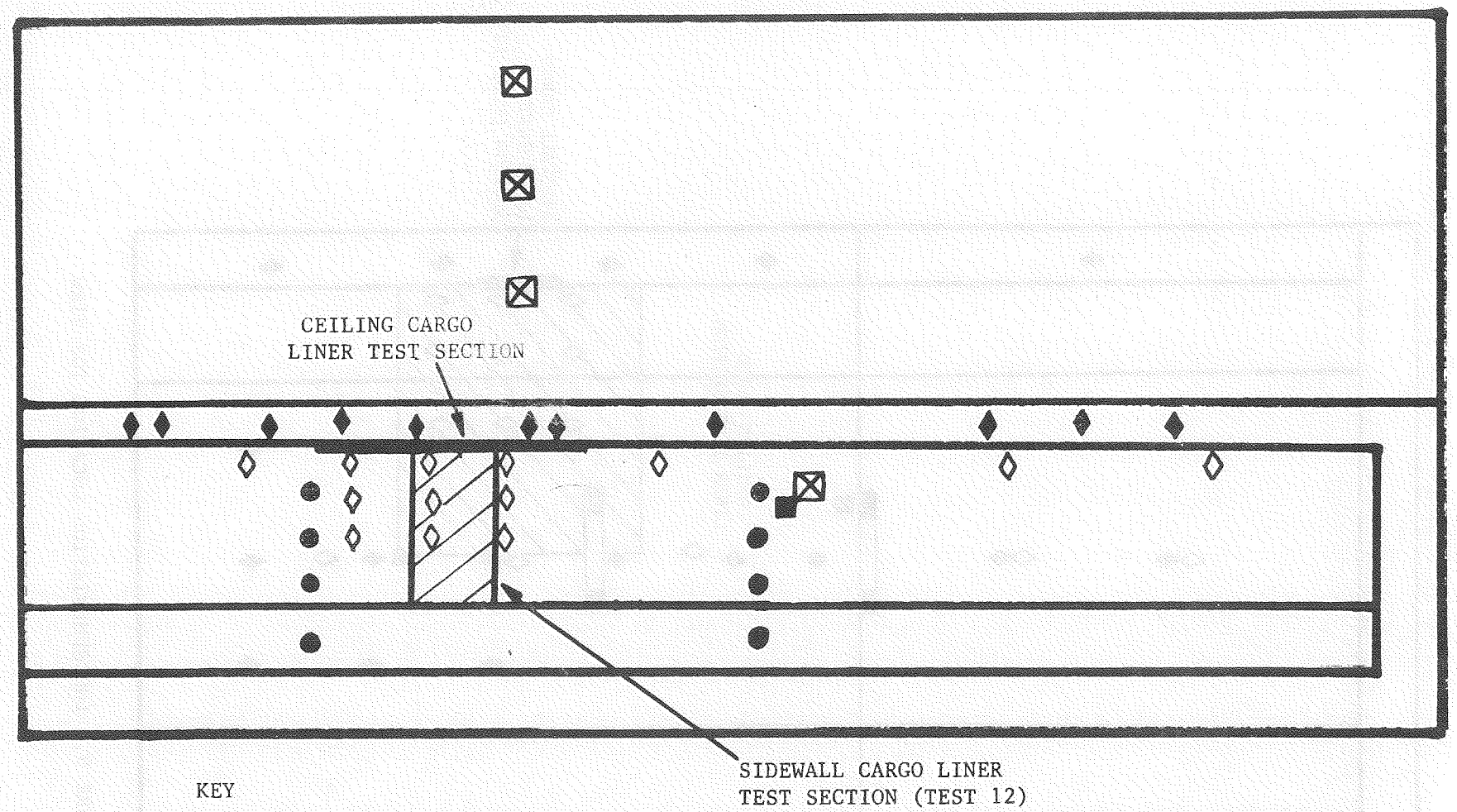

KEY

- Smoke meter
- Thermocouples outside cargo compartment
- Thermocouples inside cargo compartment
- Halon analyzer probes
- Oxygen analyzer probe

FIGURE 8. INSTRUMENTATION LOCATION SIDE VIEW

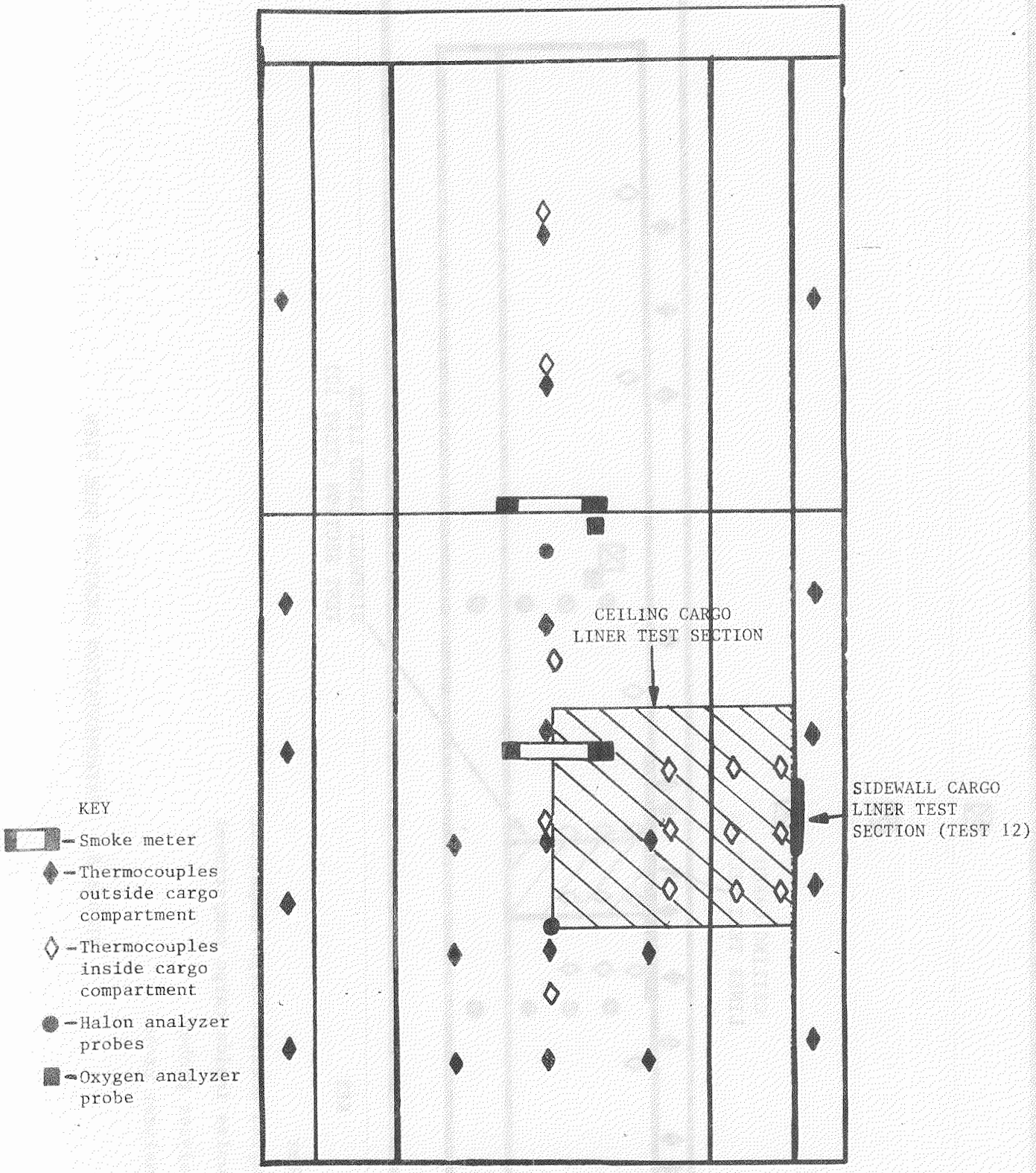

FIGURE 9. INSTRUMENTATION LOCATION TOP VIEW

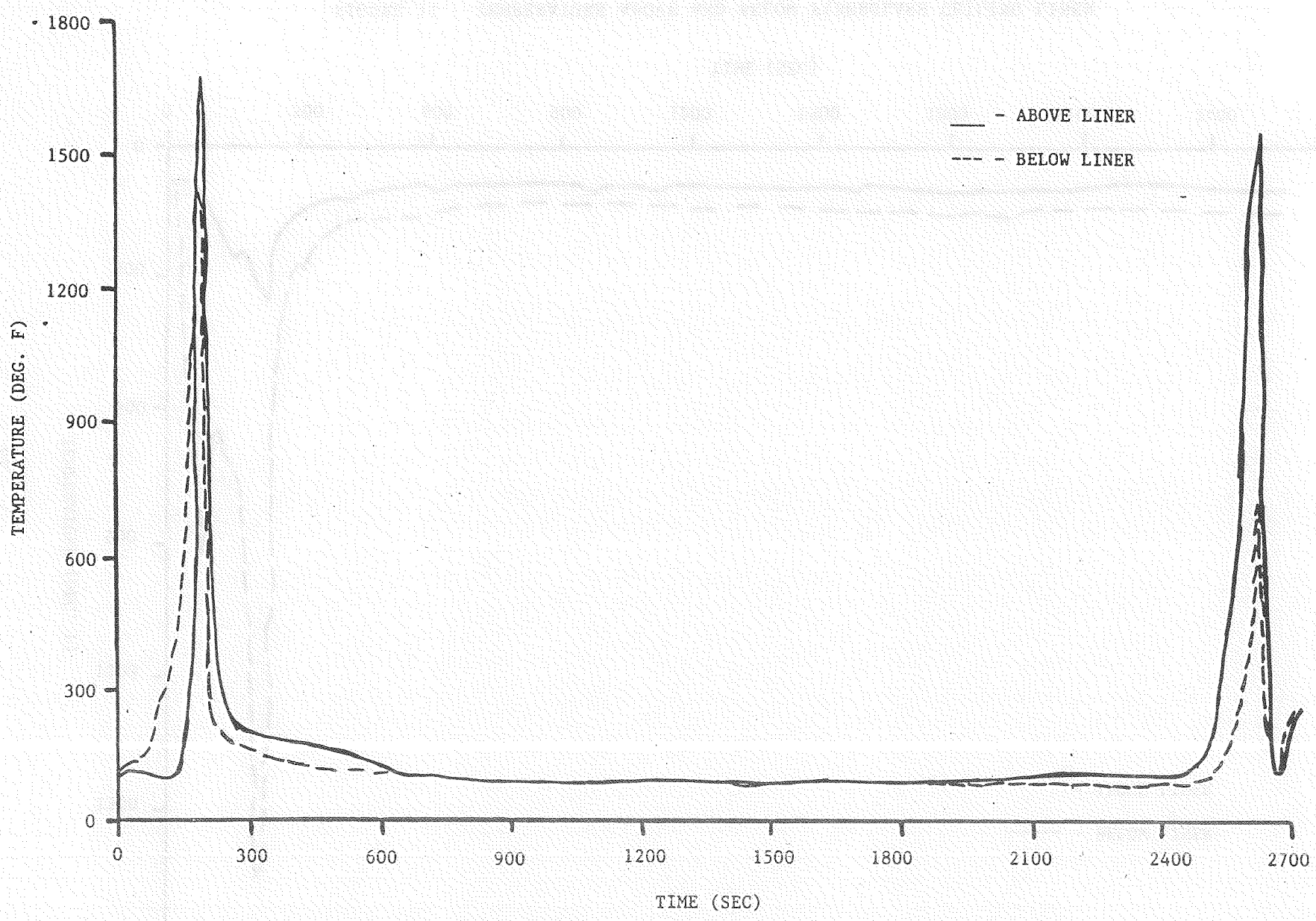

FIGURE 10. TEMPERATURE ABOVE AND BELOW KEVLAR CEILING LINER

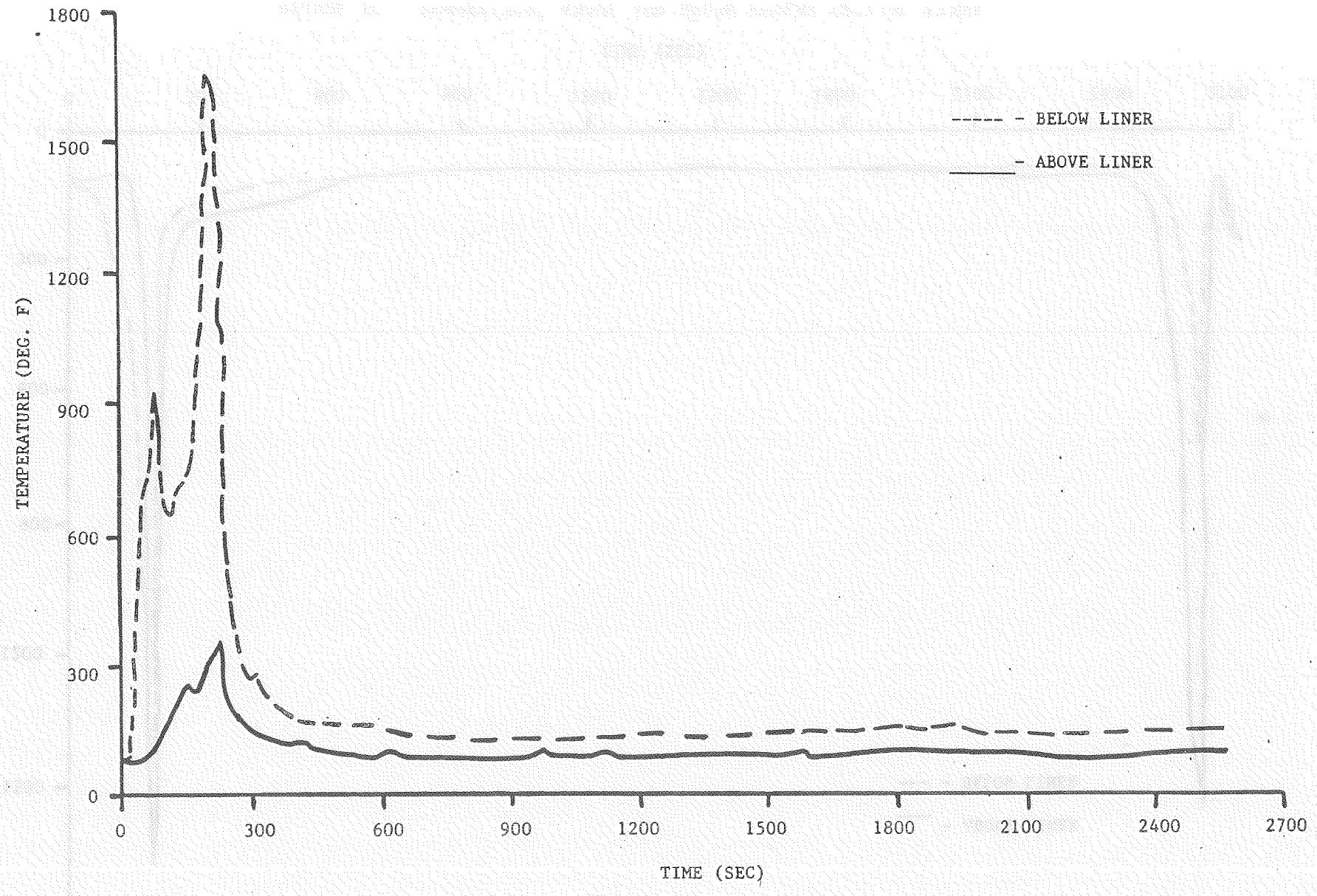

FIGURE 11. TEMPERATURE ABOVE AND BELOW FIBERGLASS CEILING LINER

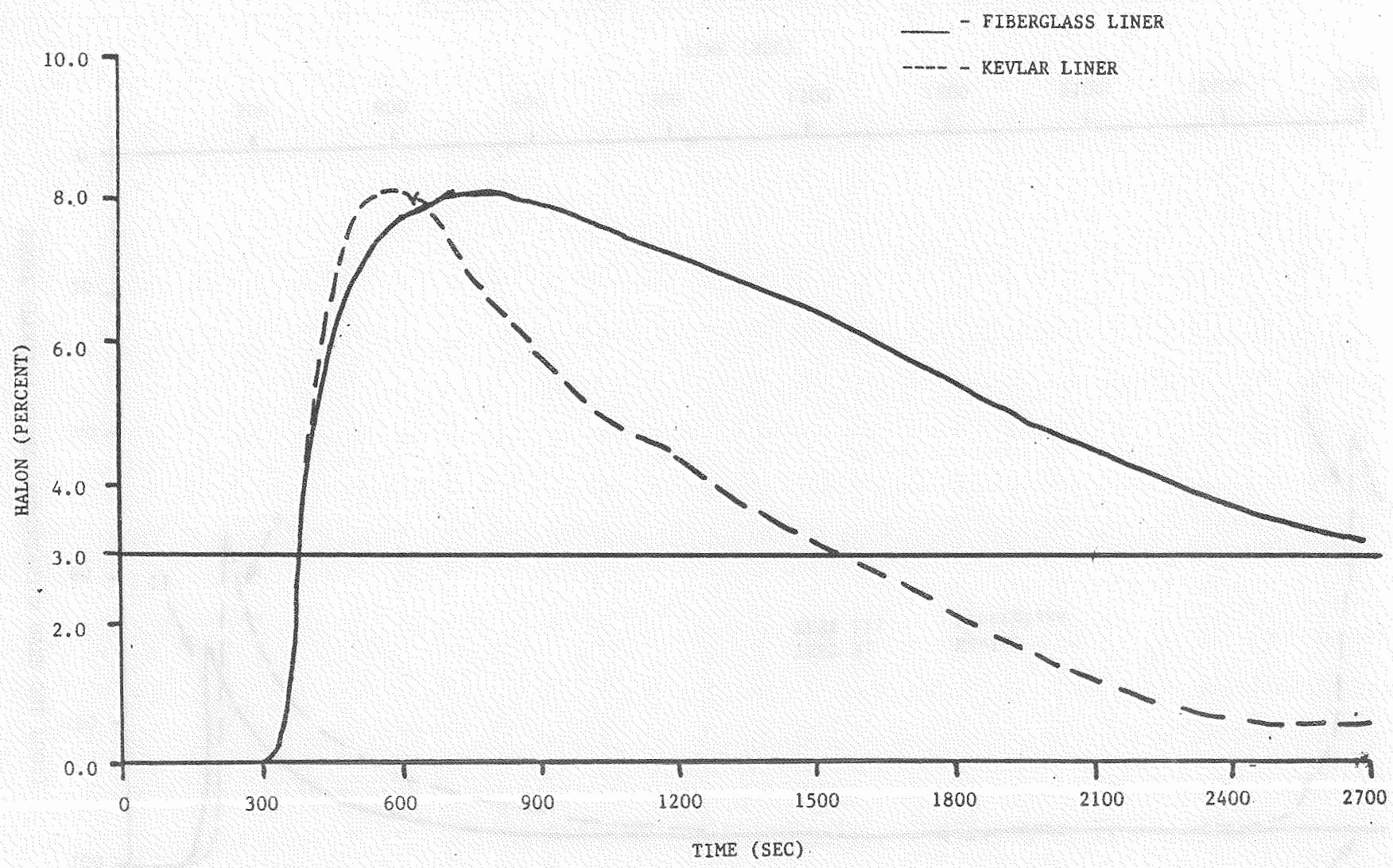

FIGURE 12. HALON CONCENTRATION

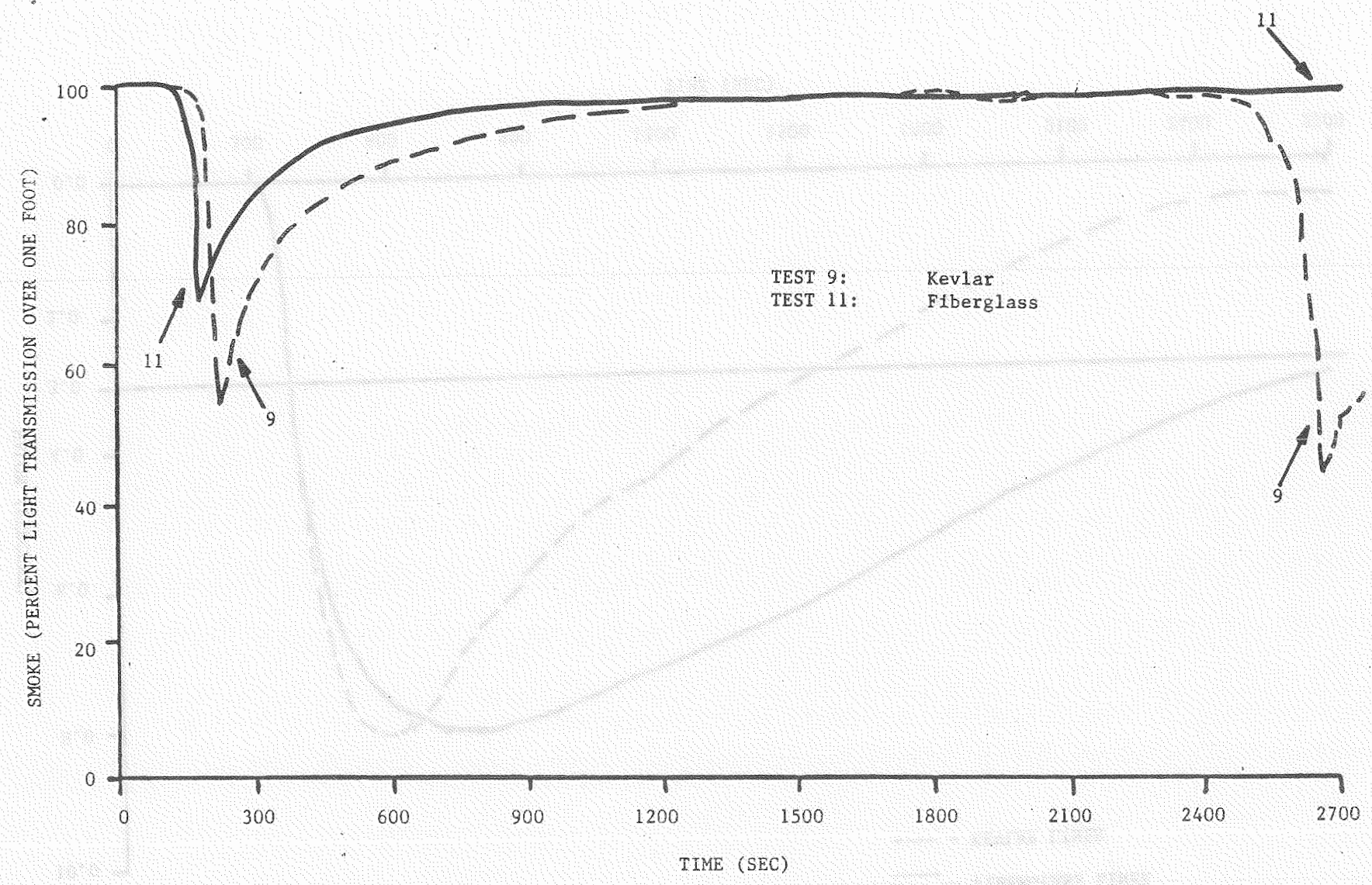

FIGURE 13. SMOKE DENSITY IN CABIN, TEST 9 AND 11

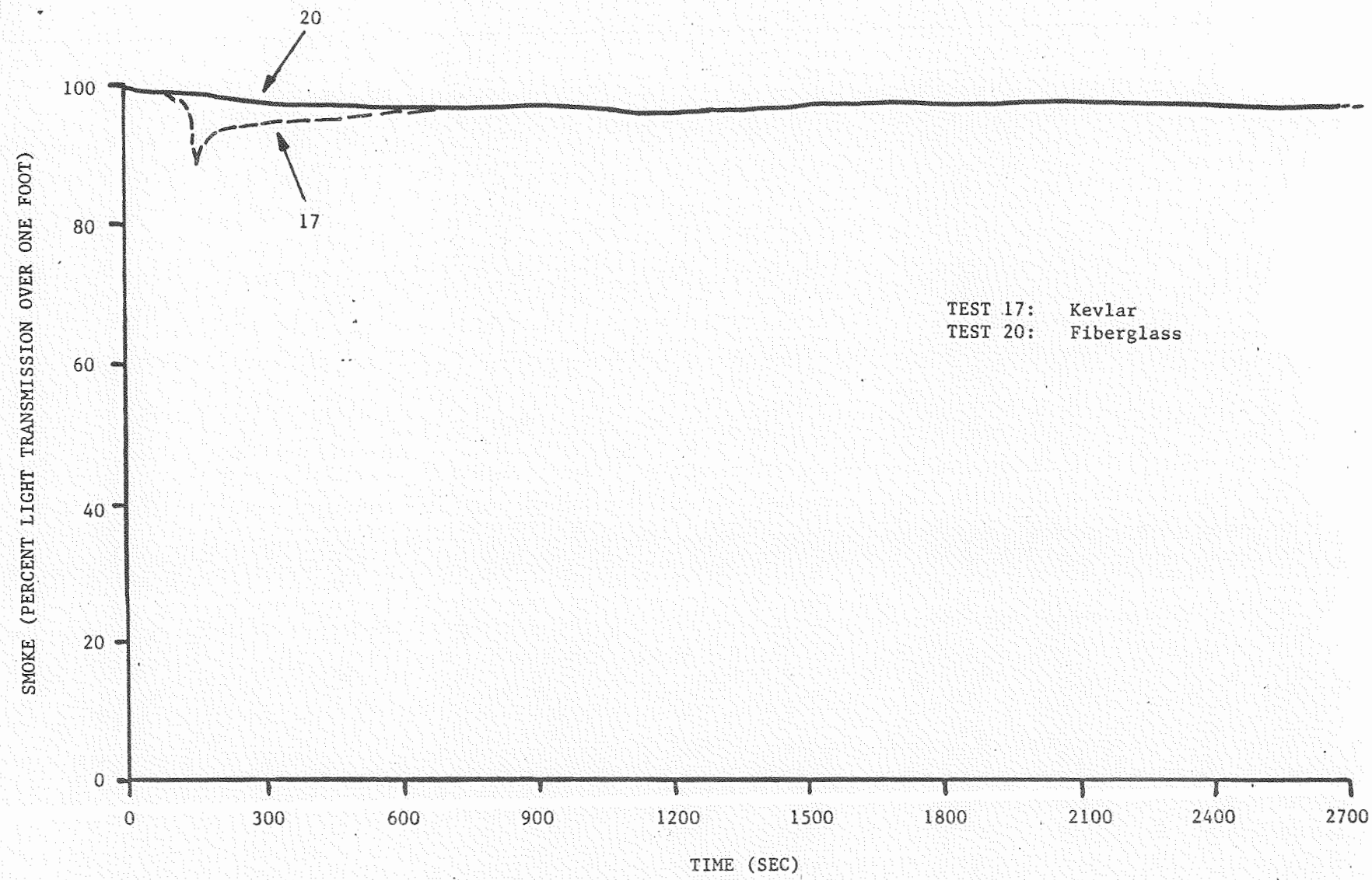

FIGURE 14. SMOKE DENSITY IN CABIN, TEST 17 AND 20

APPENDIX A

CARGO COMPARTMENT CLASSIFICATION FAR 25.857 CLASSES A THROUGH E

Class A

A class A cargo or baggage compartment is one in which (1) the presence of fire would be easily discovered by a crew member while at his station; and (2) each part of the compartment is easily accessible in-flight.

Class B

A class B cargo or baggage compartment is one in which (a) there is sufficient access in flight to enable a crew member to effectively reach any part of the compartment with the contents of a hand-held fire extinguisher; (b) when the access provisions are being used, no hazardous quantity of smoke, flame, or extinguishing agent will enter any compartment occupied by the crew and passengers; and (c) there is a separate approved smoke detector or fire detector system to give warning at the pilot or flight engineer station.

Class C

A class C cargo or baggage compartment is one not meeting the requirements for either a class A or B compartment but in which (1) there is a separate approved smoke detector or fire detector system to give warning at the pilot or flight engineer station; (2) there is an approved built-in fire extinguishing system controllable from the pilot or flight engineers station; (3) there are means to exclude hazardous quantities of smoke, flames, or extinguishing agent from any compartment occupied by the crew or passengers; and (4) there are means to control ventilation and drafts within the compartment so that the extinguishing agent used can control any fire that may start within the compartment.

Class D

A class D cargo or baggage compartment is one in which (a) a fire occuring in it will be completely confined without endangering the safety of the airplane or the occupants; (b) there are means to exclude hazardous quantities of smoke, flames or other noxious gases, from any compartment occupied by the crew or passengers; (c) ventilation and drafts are controlled within each compartment so that any fire likely to occur in the compartment will not progress beyond safe limits; and (d) consideration is given to the effect of heat within the compartment on adjacent critical parts of the airplane. For compartments of 500 cubic feet or less, an airflow of 1500 cubic feet per hour is acceptable.

Class E

A class E cargo compartment is one on airplanes used only for the carriage of cargo and in which (a) there is separate approved smoke or fire detector system to give warning at the pilot or flight engineer station; (b) there are means to shut off the ventilation airflow to or within the compartment, and the control of these means are accessible to the flight crew in the crew compartment; (c) there are means to exclude hazardous quantities of smoke, flames, or noxious gases, from the flight crew compartment; and (d) the required crew emergency exits are accessible under any cargo loading conditions.

☆ U.S. GOVERNMENT PRINTING OFFICE: 1985—505-080/20001