COPY 3

AVAILABLE IN
ELECTRONIC FORMAT

DOT/FAA/CT-85/36

FAA TECHNICAL CENTER
Atlantic City Airport
N.J. 08405

Crash Dynamics Program Transport Seat Performance and Cost Study Benefit Study

AVAILABLE IN
ELECTRONIC FORMAT

Mark R. Cannon
Richard E Zimmermann

RMS Technologies, Inc./Simula Inc.
Trevose, PA/Tempe, AZ

FEDERAL AVI...
DEC
TECHNICAL ...
ATLANTIC CITY, N.J. 08405

October 1986

Final Report

This document is available to the U.S. public through the National Technical Information Service, Springfield, Virginia 22161.

US Department of Transportation
Federal Aviation Administration

DOT/FAA
CT85/36

FAA WJH Technical Center
00020180

DOT/FAA CT85/36, Cannon, Mark R., Crash dynamics program transport seat performance and cost study benefit study, ACT Library, 00020180

NOTICE

This document is disseminated under the sponsorship of the Department of Transportation in the interest of information exchange. The United States Government assumes no liability for the contents or use thereof.

The United States Government does not endorse products or manufacturers. Trade or manufacturer's names appear herein solely because they are considered essential to the object of this report.

Technical Report Document Page

1. Report No. DOT/FAA/CT-85/36	2. Government Accession No.	3. Recipient's Catalog No.
4. Title and Subtitle: Crash Dynamics Program Transport Seat Performance and Cost Benefit Study		5. Report Date: October 1986
		6. Performing Organization Code
		8. Performing Organization Report No. TR-85433
7. Author(s): Mark R. Cannon, Richard E. Zimmermann		10. Work Unit No. (TRAIS)
9. Performing Organization Name and Address: Simula Inc., 10016 S. 51st Street, Phoenix, AZ 85044; RMS Technologies, Inc., 1200 Church Street, Mt. Laurel, NJ 08054		11. Contract or Grant No. DTFA03-81-C-00040
12. Sponsoring Agency Name and Address: Federal Aviation Administration, Technical Center, Atlantic City Airport, NJ 08405		13. Type of Report and Period Covered: Final, March 1984 - October 1985
		14. Sponsoring Agency Code: ACT-330

15. Supplementary Notes

16. Abstract

This report describes the work that was performed to support the Federal Aviation Administration's Crash Dynamics Program. An element of the program was the Controlled Impact Demonstration (CID) of a Boeing 720 aircraft. Work related to the CID involved developing modifications of commercial transport seats to improve their structural crashworthiness, then installing them alongside standard, unmodified seats aboard the test aircraft. This was followed by posttest analyses of the CID data and examination of the test specimens. Other supporting work included a literature review of the development of transport seats from the 1950's to the present, an investigation of the elements affecting transport seats' performance in a crash environment, and recommended changes that would improve the seats' survival. Additionally, a study was performed of severe survivable transport accidents between 1970 and 1983 to determine the effect transport seat performance had on passenger survival, and to identify instances where an improved seat/restraint system might have been beneficial.

17. Key Words: Controlled Impact Demonstration, Crashworthiness, Crash Survival, Crash Environment, Transport Seat, Transport Accident, Cost/Benefit Study	18. Distribution Statement: This document is available to the U.S. public through the National Technical Information Service, Springfield, Virginia 22161

19. Security Classif. (of this report)	20. Security Classif. (of this page)	21. No. of Pages	22. Price
Unclassified	Unclassified	88	

Form DOT F 1700.7 (8-72)

PREFACE

This report describes the commercial transport seat crashworthiness project conducted by Simula Inc. and RMS Technologies, Inc. under Federal Aviation Administration (FAA) Technical Center Contract DTFA03-81-C-00040. The project consisted of developing crashworthy transport seat modifications for the Controlled Impact Demonstration (CID), analyses of the CID data, a literature review of transport seat development, and a study of seat performance in transport accidents. Technical monitor for the FAA Technical Center was Mr. Dick Johnson, FAA Transport Program Manager. The contractor's technical monitor was Mr. Roger Lloyd.

TABLE OF CONTENTS

	Page
PREFACE	i
EXECUTIVE SUMMARY	viii
INTRODUCTION	1
COMMERCIAL TRANSPORT SEAT DEVELOPMENT	2
DESIRED CRASH PERFORMANCE OF A TRANSPORT SEAT	15
CID SEAT PROGRAM	17
CID SEAT DEVELOPMENT	17
TESTING	19
CID PERFORMANCE	20
TRANSPORT SEAT PERFORMANCE IN ACCIDENTS FROM 1970 TO 1983	30
CATEGORY 1 ACCIDENTS	34
CATEGORY 2 ACCIDENTS	38
CATEGORY 3 ACCIDENTS	44
SUMMARY OF PASSENGER INJURIES FROM ACCIDENTS IN CATEGORIES 1, 2, & 3	46
DESCRIPTION OF AN IMPROVED TRANSPORT SEAT AND ESTIMATED ASSOCIATED COSTS	49
DESCRIPTION	49
DEVELOPMENT COSTS	50
FUEL COSTS	50
COSTS OF A HUMAN LIFE AND A SERIOUS INJURY	54
COST OF A HUMAN LIFE	54
COST OF A SERIOUS INJURY	59
RESULTS OF COST/BENEFIT STUDY	60
COSTS	60
BENEFITS	61
COSTS VERSUS BENEFITS	62

TABLE OF CONTENTS (CONTD)

		Page
DISCUSSIONS AND RECOMMENDATIONS		65
REFERENCES		69
APPENDIX A	STATIC VERSUS DYNAMIC TESTING	A-1
APPENDIX B	DETERMINING ADDITIONAL FUEL COSTS AS A FUNCTION OF INCREASED SEAT WEIGHT	B-1
APPENDIX C	DISTRIBUTION LIST	C-1

LIST OF ILLUSTRATIONS

Figure		Page
1	Example of transport seat built during the 1940's.	6
2	Passenger seat used on Martin 202 aircraft	7
3	Passenger seat used on Convair 340 aircraft.	8
4	Passenger seat energy-absorbing leg built by Aerotherm	9
5	Aerotherm Model 723 seat - side view	10
6	Aerotherm Model 723 seat - rear view	10
7	Lap belt energy absorber used on the Hardman passenger seat	11
8	Seat pan of the Hardman passenger seat with lap belt energy absorber	11
9	Energy-absorbing motion of the TECO Mason Seat	12
10	Energy-absorbing passenger seat developed at Wayne State University	13
11	Leg deformation of the Hardman 8727 seat after forward static test.	14
12	Typical triple-passenger transport seat with asymmetric leg configuration.	21
13	Examples of various load-limiting methods for CID transport seat experiments	22
14	Example of lateral bracing applied to the CID seat experiments.	23
15	Prototype track fitting used on the CID modified seats	23
16	Forward static test arrangement.	24
17	Forward static test failure location of standard seat (Example 1).	24
18	Forward static test failure location of standard seat (Example 2).	25
19	Floor deformation prior to dynamic testing	26
20	Standard seat after dynamic testing.	27
21	Modified seat after dynamic testing.	28

LIST OF ILLUSTRATIONS (CONTD)

Figure		Page
22	Location of CID seat experiments aboard 720 aircraft	29
23	Illustration of standard and conceptual seats.	52
24	Top and front views of standard and conceptual seats	53
25	Cost/benefit band based on 55 to 107 fatalities and 59 to 63 serious injuries.	64

LIST OF TABLES

Table		Page
1	Frequency of Injury Compared with Seat Behavior Characteristics from Accidents Reviewed at CAMI.	32
2	Category 1 accidents	34
3	Passenger Injury Information Compared with Seat Performance for Category 1 Accidents Reviewed at CAMI.	35
4	Population of Passengers from Category 1 Accidents Whose Injuries Could Have Been Caused by Seat Failure or Forward Displacement	38
5	Category 2 Accidents	38
6	Passenger Injury Information Compared with Seat Performance for Category 2 Accidents Reviewed at CAMI.	39
7	Probable Seat Failure Modes and Associated Survivors' Injuries, and Fatality Descriptions for Coach Section of 12-8-72 Chicago Accident	41
8	Population of Passengers from Category 2 Accidents Whose Injuries Could Have Been Caused by Seat Failure or Forward Displacement	42
9	Crash Scenarios.	43
10	Category 3 Accidents	44
11	Population of Passengers from Category 3 Accidents Whose Injuries Could Have Been Caused by Seat Failure.	46
12	Population of Passengers from Accidents in Categories 1, 2 and 3 Whose Injuries Could Have Been Caused by Seat Failure or Forward Displacement.	46
13	Development Costs for a Transport Seat to Meet New Performance Criteria	50
14	Additional Annual Fuel Cost for Adding One Pound of Weight to Each Passenger Seat for the 1985 U.S. Fleet (Based on Fuel Price of $.90/gal).	51
15	Values of a Human Life Used by Various Agencies.	54
16	Recovery Amounts from Married Male Fatalities.	56
17	Recovery Amounts from Unmarried Male Fatalities.	57
18	Recovery Amounts from Female Fatalities.	57

LIST OF TABLES (CONTD)

Table		Page
19	Summary of Results from Passenger Surveys Between 1981 and 1983.	58
20	Calculation of the Average Recovery Amount for Commercial Aircraft Accident Fatalities	59
21	Summary of Injury Settlements from U.S. Airline Accidents. . .	59
22	Accidents with Insufficient Information in Which Seat Performance Could Have Been a Survival Factor.	63
23	Accidents with Reported Seat Failures, but Without Seat Related Injuries	66
24	Occurrence and Location of Spinal Injuries in Category 1 and 2 Accidents.	67

EXECUTIVE SUMMARY

The purpose of the Federal Aviation Administration's (FAA) Crash Dynamics Program is to increase the occupant protection level in survivable aircraft accidents. This report describes the effort in the program which pertained to commercial transport passenger seats.

Standard transport seats were statically and dynamically tested, and the results were evaluated to determine how the seats could be modified to improve their structural crashworthiness. Using computer modeling techniques, the seats were modified and then subjected to the same tests. Both modified and unmodified seats were then installed aboard a Boeing 720 as seat experiments for the Controlled Impact Demonstration (CID). The impact forces experienced by the seats in the CID were not severe enough to show a differentiation between the standard and modified seats. However, the development of the modified seats showed that improvements in crashworthiness could be made with virtually little increase in cost or weight. A literature search showed that since the 1950's, transport seats have experienced several changes in weight and their level of survivability.

A study was performed on severe survivable transport accidents between 1970 and 1983 to determine the effect seat performance had on passenger survival and identify instances where an improved seat might have benefitted the passenger. The monetary benefits of such a seat were based on court settlement amounts resulting from transport accident deaths and injuries. These were compared to the costs associated with an improved seat. The result was a cost/benefit band which allowed the parameters of added seat weight and cost to be used to evaluate the merit, on a cost basis, of any seat design which would provide the required crash protection on which the band was based. Consequently, the cost/benefit study, combined with the development work performed for the CID, showed that there is both technical and economical justification for improving the crash performance of transport seats.

INTRODUCTION

The Federal Aviation Administration (FAA) initiated the Crash Dynamics Program in order to develop the technical data base and methodologies necessary to assess the dynamic impact environment and occupant survivability characteristics of civil aircraft. This was to be accomplished by determining the impact characteristics of current aircraft, the development of computer modeling techniques, full-scale aircraft and component impact testing, and the evaluation of human tolerance to impact conditions.

The correlation of all these data could lead to useful guidelines for the future design of crashworthy aircraft, seats, and restraint systems to ultimately increase the occupant protection level in survivable aircraft accidents. An element of the program was the full-scale impact test of a Boeing 720 aircraft at Edwards Air Force Base in December 1984.

Under contract from the FAA, Simula and RMS developed and installed seat experiments for the Boeing 720 Controlled Impact Demonstration (CID) which would demonstrate feasible methods of improving occupant protection. Experience and established technology in crashworthy seat systems were applied to develop modifications of commercial transport seats to accomplish this goal. Modifications were made to increase the level of survivability with minimal increases in weight and cost, and the modified seats were installed aboard the 720 alongside standard, unmodified seats. A synopsis of the development work for the CID and the results of the impact test is included in this report. Further details of the development work and the CID results are presented respectively in two reports; one is entitled Seat Experiments for the Full-Scale Transport Aircraft Controlled Impact Demonstration (DOT/FAA/CT-84/10) (reference 1), the other is expected to be published in 1986. It is entitled Seat Experiment Results - Full-Scale Transport Aircraft Controlled Impact Demonstration (DOT/FAA/CT-85/25) (reference 2).

This report also includes an overview of the development of the transport seat from the 1950's to the present, the desired crash performance of a transport seat, and a description of the changes that can improve a transport seat's survival in a crash environment.

During the seat modification effort in preparation for the CID, it was discovered that changes could be made to transport seats which would enable them to meet more rigorous design and test criteria with little increase in weight. To support changes in design and test criteria, an FAA cost/benefit analysis would need to show that the cost associated with a seat change would be outweighed by, or at least equivalent to, the monetary benefits of lives saved and injuries reduced. In support of such an analysis, the results of a cost/benefit study of transport aircraft accidents between 1970 and 1983 are contained in this report.

COMMERCIAL TRANSPORT SEAT DEVELOPMENT

The design characteristics of transport seats have gone through an evolutionary process since their usage began in the 1920's. However, reviewing available literature has revealed little about the details of their design until specific seat design criteria were implemented in the 1940's. Those criteria have not changed appreciably since their inception, but the literature shows that the design and capabilities of transport seats have undergone many changes due to other influences such as full-scale aircraft testing, popular opinion, transport design, and operating costs.

Until 1946, the Civil Air Regulations (CAR), which specified transport seat design, stated that "seats shall be securely fastened in place." Seats were of a basic tubular construction (figure 1) and were designed for approximately 4.5-G forward inertial loads (reference 3). During that year, the CAR seat design criteria were changed to 6.0 G forward, 1.5 G sideward, 4.5 G downward, and 2.0 G upward. The seats used in aircraft during that period are shown in figures 2 and 3. The Convair 340 seat, shown in figure 3, was designed to static loads of 9 G forward, 3 G sideward, 8.5 G downward and 5 G upward (reference 4).

Concurrently, during the early 1950's, interest developed among some airlines in using rear-facing seats. Influenced by studies obtained from European airlines and U.S. military aircraft, North American Airlines and Burns Aero Seat Co. designed seats, tested them to 9 G forward, and installed them on at least seven aircraft (reference 5). In 1953, NACA conducted full-scale crash tests with Curtiss C-46 and Fairchild C-82 transport planes. Data showed that forward loads of more than 12 G were imposed on some of the seats (reference 6). This led NACA to establish passenger seat design requirements such as increased seat attachment points, elastic deformation to absorb peak loads, frictional damping to prevent elastic rebound, and inflatable arm rests for delethalization (reference 6).

In 1952 the CAR was amended to increase the forward static load requirement of transport seats to 9 G. The literature does not reflect that this change influenced seat design until 1957, which was the same year passenger jet aircraft began service.

Rearward seating continued to be an issue through 1956 and 1957. Campbell (reference 7) cited investigations on human impact tolerance by de Haven and Royal Air Force (RAF) accident studies to argue the case for U.S. airlines to use rear-facing seats. He suggested that seats be redesigned with higher and stronger seat backs, support for lateral forces, improved seat/floor anchoring, and an increased inertial load from 9 G to a "more realistic figure." For rear-facing seats, he recommended 50 G forward (relative to the aircraft), 50 G applied at angles 30 degrees to the left and right (which results in 25 G laterally), and 10 G rearward. An Air Force study over a two-and-a-half year period was reported by Stanfield (reference 8) showing that head injuries were the most frequent cause of death in survivable USAF transport accidents. However, in these cases, there were no fatal head injuries to occupants of rear-facing seats. Figures for all the accidents showed that 98.3 percent of rear-facing passengers and 84.4 percent of forward-facing passengers suffered no injuries. The majority of the injuries were due to the occupant being ejected in their seats upon impact, or due to the flailing of the head and/or extremities during abrupt deceleration.

NACA continued its series of full scale transport crash tests with a Lockheed Loadstar and in 1956, published results concerning crash impact loads and principles of seat design (reference 9). In the same year, Aviation Crash Injury Research (AVCIR) issued a paper detailing its philosophies relative to the design of passenger seats and aircraft tie-down structure (reference 10). AVCIR described a survivable crash as having an impact speed of 173 mph at a 15-degree nose-down attitude with 30 degrees of yaw and 30 degrees of roll. This scenario was partially the result of tests conducted by AVCIR in simulating the conditions of a C-46 crash which occurred at Louisville, Kentucky in 1953. Three crash tests were performed with service weary C-46 aircraft at various speeds and impact angles. All three tests were deemed survivable and the maximum longitudinal acceleration measured on the fuselage floor was a triangular-shaped 20-G pulse with a base duration of .230 sec. (reference 11).

During the 1950's, compliance criteria in the form of a Technical Standard Order (TSO) were developed within the aircraft industry to control the design and quality of parts supplied by vendors. TSO-C39 was developed for transport seats designed to meet the 9-G forward load requirement. It adopted the strength requirements of National Aircraft Standards (NAS) Specification 809 dated January 1, 1956. Those requirements, which are still in current use, were 9 G forward, 3 G sideward, 2 G upward and 6 G downward. However, the TSO further specified that the sideward load capability need not exceed the 1.5-G CAR requirement.

Although the CAR forward strength increase to 9 G in 1952 and the TSO downward strength increase to 6 G in 1956 were probably in anticipation of the higher take-off and landing speeds of jet transports, most of industry's response to the "jet-age" was directed by the aforesaid findings of NACA and AVCIR (reference 12). Industry took advantage of the improved strength capabilities of jet aircraft floor structure and the aircrafts' greater lifting capability and began voluntarily designing seats which surpassed the TSO requirements. Although the floor structure was designed to withstand seat tiedown loads to a minimum of 9 G, seat manufacturers were able to design seats to withstand greater inertial loads by incorporating energy absorbers into the seat structure.

The Aerotherm Corporation was the first to manufacture energy-absorbing seats. They were used aboard Pan American 707's in 1958 (reference 13). Advertised as 12-G seats in a three-passenger configuration, they would stroke through 6 in. of horizontal movement at 9.2 G. They used extendable rear legs which limited the load by an extrusion process (figure 4). These energy absorbers were used extensively on different model seats by United, Northwest Orient, Trans World, and Air India (reference 14). Aerotherm also developed a three-passenger aft-facing seat for the Air Force. This seat had energy-absorbing front legs (relative to the seat) which stroked at 16 G and was used on MATS C-135's (reference 15).

Seats utilizing similar energy-absorbing mechanisms were later developed by Aerotherm for Pan Am for use aboard the Boeing 747. However, rather than two energy-absorbing devices, these seats featured six. Each seat pan in the three-passenger seat was connected to a floor-mounted spreader bar by a pair of energy absorbers. This seat, designated the model 723, was manufactured under the UOP Aerospace Division name, and Pan Am had thirty 747 aircraft fitted with a full complement of these seats. Side and rear views of the seat are shown in figures 5 and 6.

A lap belt energy-absorption system, the Mark I, was developed by Hardman and used on their seats in 1961. It utilized stainless steel tension rods which were stretched by a cable and pulley arrangement when the attached lap belt was sufficiently loaded. This prevented inertial loads on the occupants from inducing a belt failure. One device was used for each lap belt attachment (figure 7), so each seat position used two as an assembly (figure 8). Extensive testing was conducted to establish that the system would restrain the occupant against a 35-G half sine pulse with a 30-msec duration (reference 16). Hardman drawing No. 8910 and Boeing print No. 65-14534 indicate that seats using this energy absorber were aboard American, Braniff, and Western Airlines' 720 aircraft.

TECO Inc., formerly of Burbank, California, manufactured the Mason seat, which rotated about a single cross tube under the seat pan (figure 9). It featured an energy absorber which separated a slot in a ductile steel plate as the seat rotated through 62 degrees. Tests were said to have been made at 30 G with a 50-msec duration, and 20 G with a 100-msec duration (reference 17). The seat was purchased and evaluated on 707 and 720B aircraft by Continental, American, and Trans World Airlines during 1961 and 1962.

Weber Aircraft Corporation developed and tested seat part number 804003 to TWA specifications in 1962. This three-passenger seat, made for use on 707's, featured extension-type, energy-absorbing devices on the rear legs called Swaged Impact Reducers (reference 18). Longitudinal testing was conducted with one, two, and three occupants at 30-G peak and 50 msec to verify that the seat would function in spite of the highly asymmetric loading conditions. A fully occupied seat was also tested at 38-G peak, 80-msec duration without ultimate failure. Two and three-passenger seats, part numbers 804002 and 804003, were made for Eastern Airlines' 720 and 727 aircraft, and were energy absorbing. The two-passenger seat was tested up to 15-G peak, 100 msec without failure, and the three-passenger seat up to 16.4-G peak, 150 msec without failure (reference 19). Eastern also used part number 210386, a first-class, non-energy absorbing two-passenger seat aboard their Lockheed Electras. One seat was subjected to sequential tests of 8, 9.5, and 12.1-G peaks, each with a duration of 150 msec (reference 20). Weber also made aft-facing, energy-absorbing seats for the Air Force. They were tested to 19.6 G peak with a 150-msec duration (reference 21).

During 1961, researchers at Wayne State University designed an aft-facing seat that prompted inquiries from several seat manufacturers (reference 22). It was suspended from the aircraft ceiling and attached to the floor, and was designed to limit passenger accelerations to 20 G vertically, 30 G longitudinally, and 10 G laterally (figure 10).

By the mid-1960's, interest in energy-absorbing seats began to diminish, although most U.S. airlines required seats to meet a forward ultimate load factor of 12 G applied at 20 degrees up, down, left, and right of straight forward (reference 23). TWA began using Burns Aero Seats aboard its 720, 880 and DC-9 aircraft. Since Burns Aero did not have a dynamic test facility (reference 23), it is doubtful that their seats had energy-absorbing devices of the kind used by Aerotherm or Hardman. Western began using the Aerotherm Zephyr II seat aboard its 720B aircraft. Unlike earlier seats, the Zephyr II now offered energy absorption as an option. Seats aboard the DC-8 aircraft were manufactured by Douglas, and did not have any energy absorber per se.

The seat, which was attached to one wall, had only one leg assembly made of sheet metal, and was presumably designed to absorb some energy when deformed in the forward and downward direction.

By 1967, this form of energy absorption became widely used among seat makers. Described as "controlled structural deformation," front legs were designed to collapse progressively under high acceleration loads. This proved advantageous to manufacturers, because it allowed them to offer some form of optional energy-absorbing device that had little weight penalty and cost associated with it, and was also a device they could test statically (reference 24).

One of the seats used during the 1960's, the Hardman Model 8727, did not have energy-absorbing devices, but its sheet metal construction enhanced its performance under loading conditions. When subjected to a forward test, the sheet metal seat pan crushed and the rear legs rotated about their attachment points (figure 11), allowing the occupant to move forward while the deforming metal absorbed some of the energy.

In May of 1967, Haley, et al. (reference 25) released a study of survivable transport accidents between 1955 and 1964. They estimated that out of 1,037 fatalities and serious injuries, between 340 and 520 could have been eliminated by improved restraint systems. After reviewing the NACA and FAA data from the crash tests of a Lockheed Constellation (L-1649) and a DC-7, they recommended that transport seats be designed to 20 G forward with a velocity change of 64 ft/sec. A symmetric, triangular test pulse would properly simulate the measured pulses from the tests. Their findings also indicated that provisions should be made for relative motion of the seat legs with respect to the aircraft floor to ensure seat retention when the floor deforms.

Beginning in the early 1970's, more weight-critical aircraft such as the 747, L-1011, and supersonic transport were being developed. Reference 24 discusses how these aircraft and other factors provided impetus for seat manufacturers to emphasize weight reduction in transport seats. As a result, new seat manufacturers emerged, and the use of new lightweight alloys and advanced composites were implemented into new seat designs (reference 26). The reduction in seat weight had enough economic advantage that airlines began refurbishing entire fleets with new seats (reference 27).

Unlike their predecessors, these current transport seats tend to be rigid, non-yielding structures in order to achieve minimal weight and pitch. These deformation characteristics were noted by Goold (reference 28) in the following:

> Increased seat densities have lead to an interesting change of policy on seat strength. Manufacturers at one time designed for crash conditions, assuming a controlled deflection under G. But airlines now require no distortion up to the point of actual failure, since even quite small deflections can so reduce clearances between adjacent seats that injury might result.

Figure 1. Example of transport seat built during the 1940's.

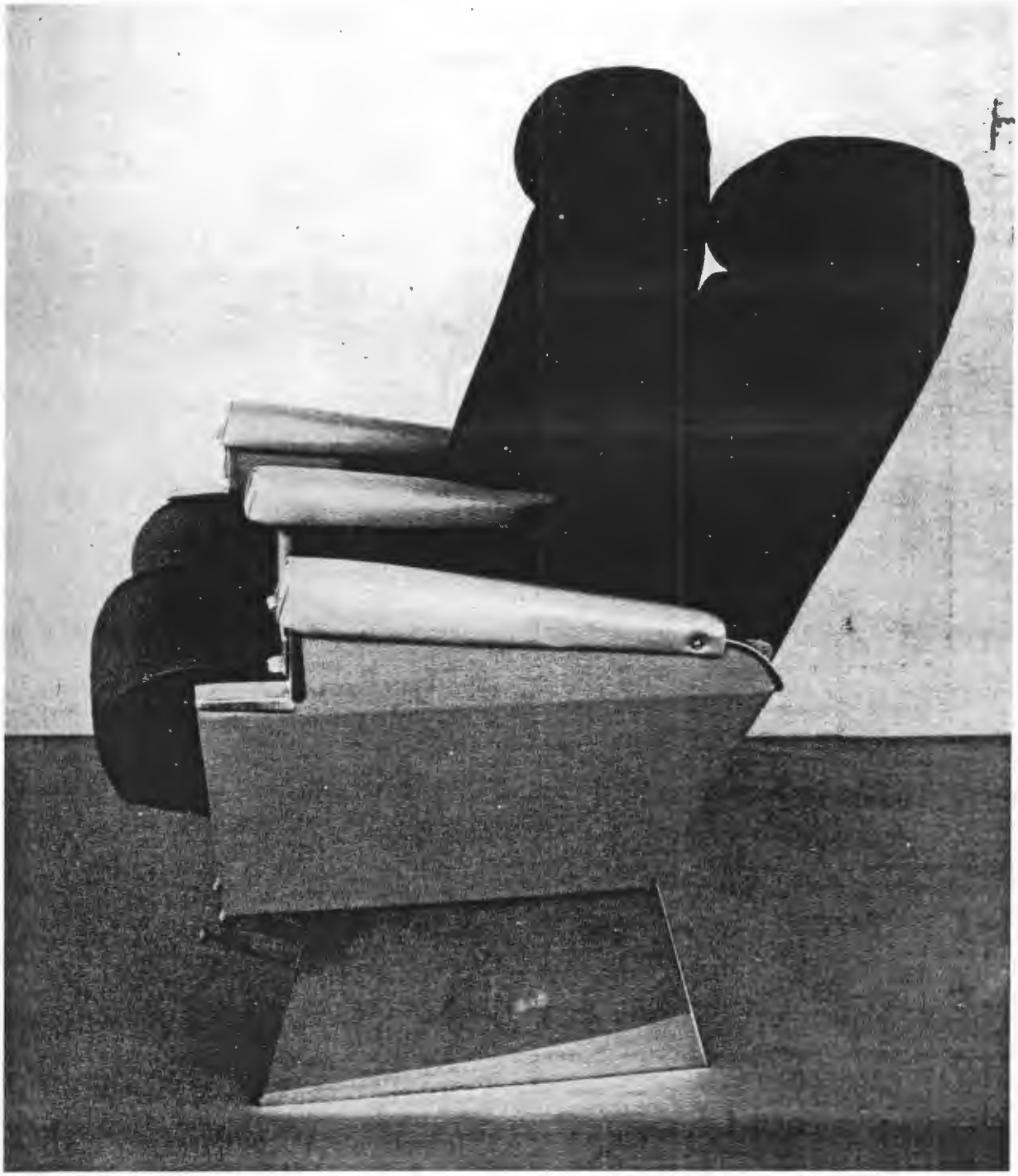

Figure 2. Passenger seat used on Martin 202 aircraft.

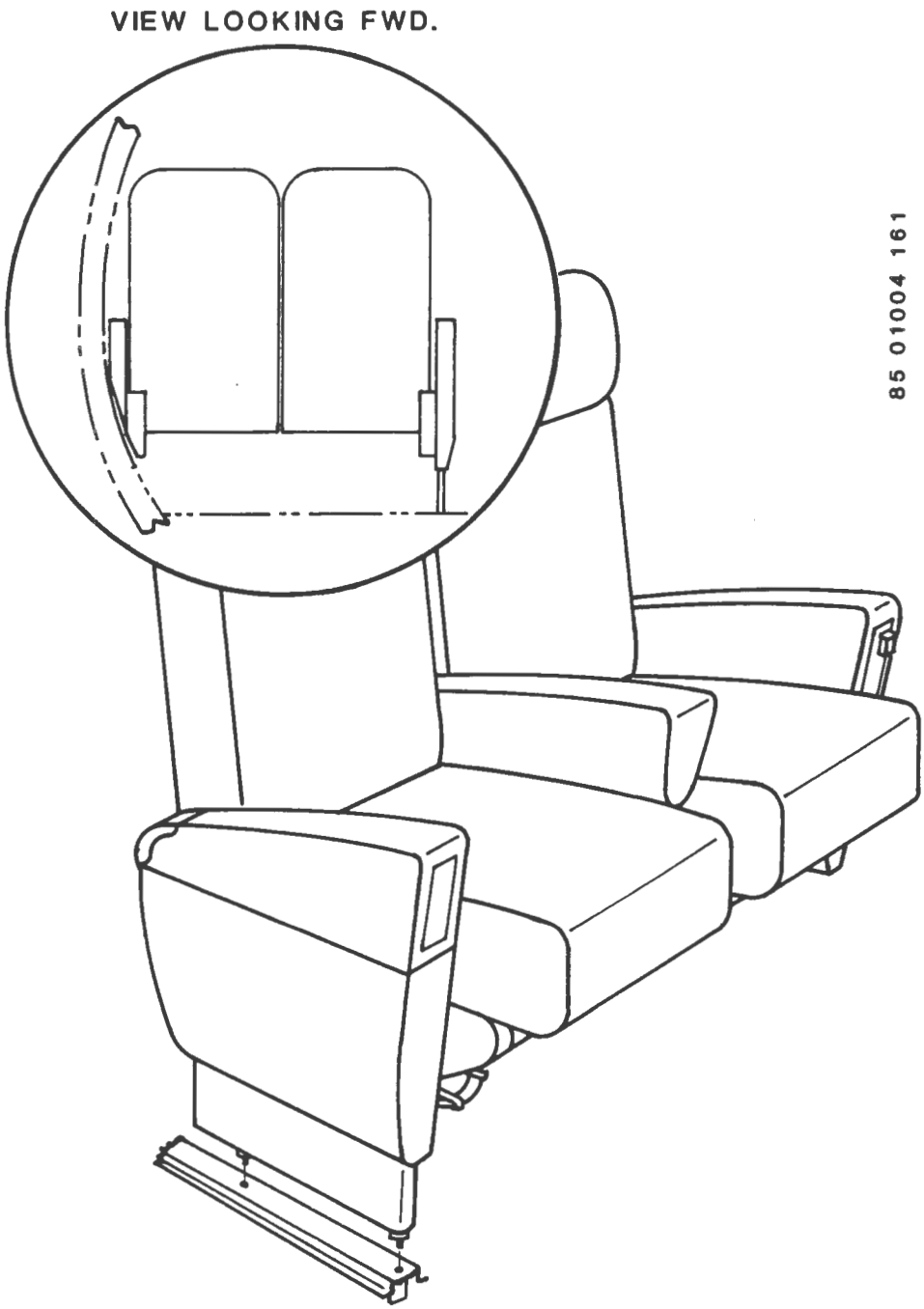

Figure 3. Passenger seat used on Convair 340 aircraft.

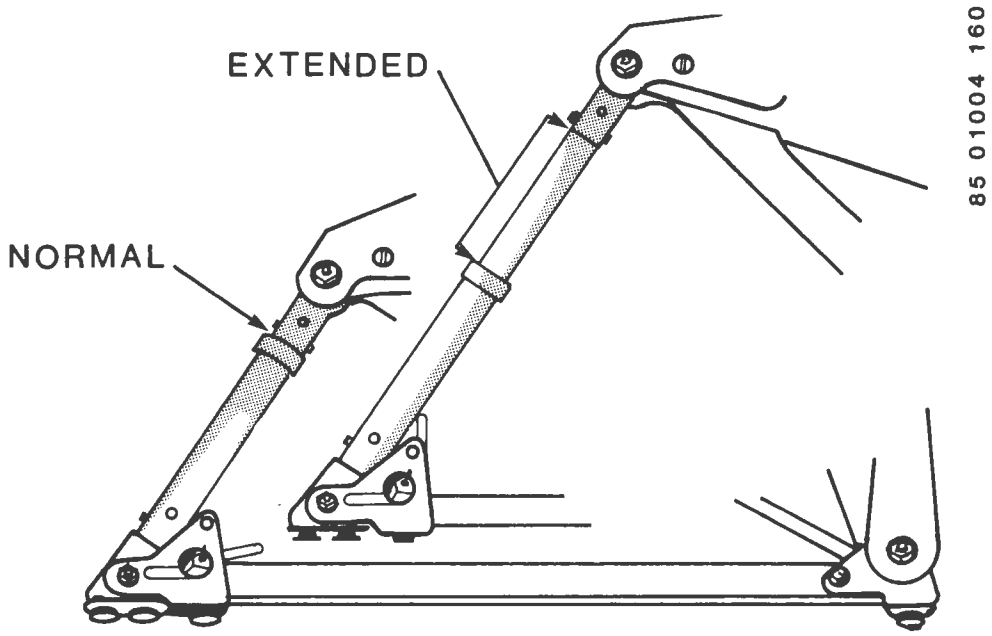

Figure 4. Passenger seat energy-absorbing leg built by Aerotherm.

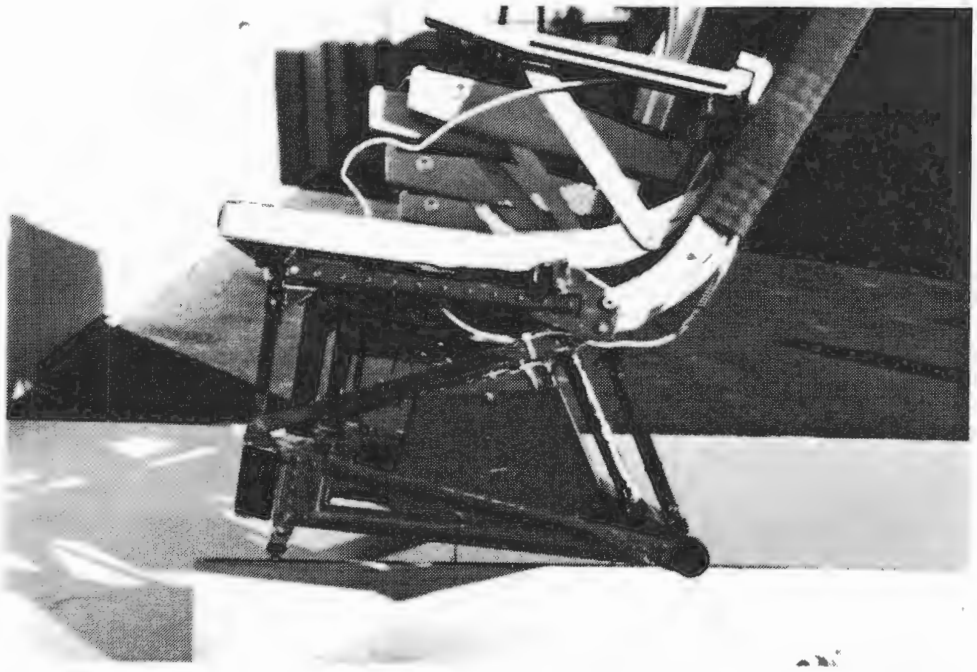

Figure 5. Aerotherm Model 723 seat - side view.

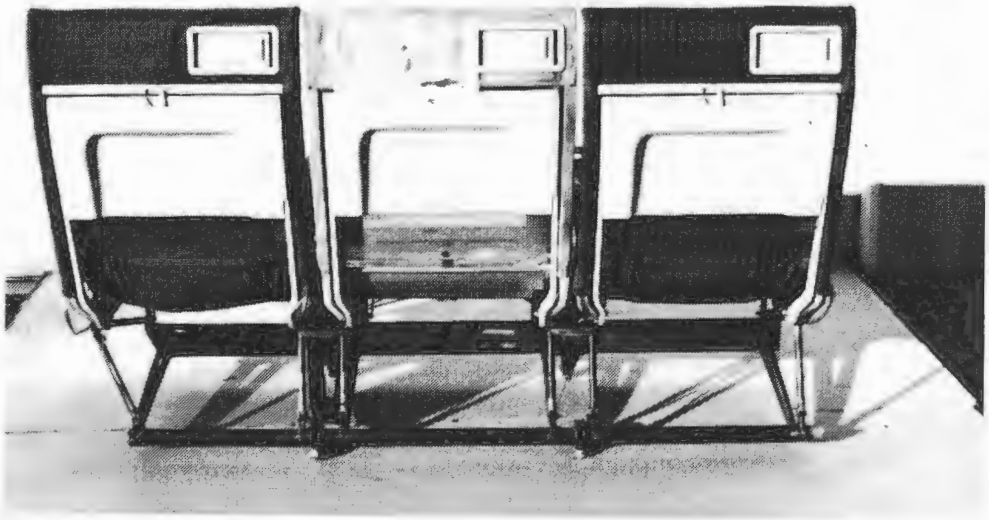

Figure 6. Aerotherm Model 723 seat - rear view.

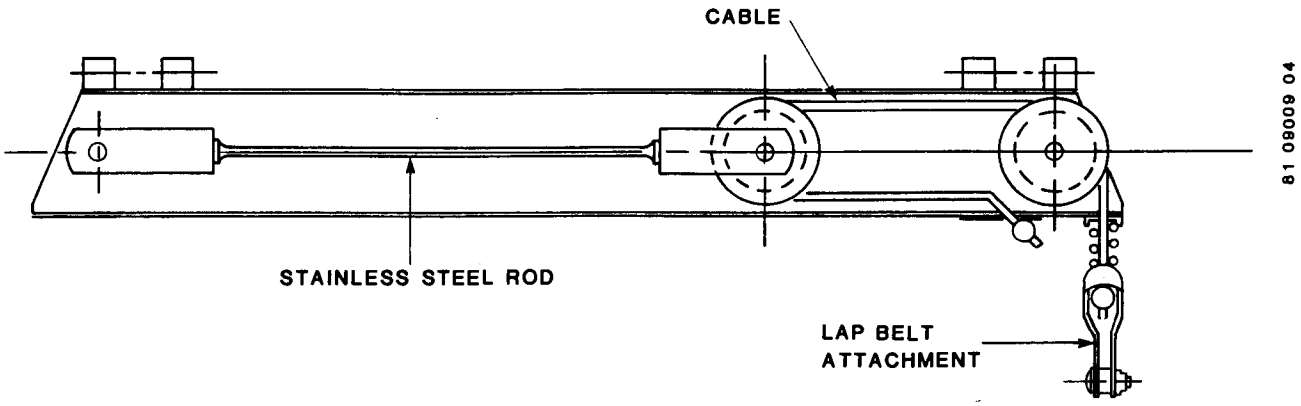

Figure 7. Lap belt energy absorber used on the Hardman passenger seat.

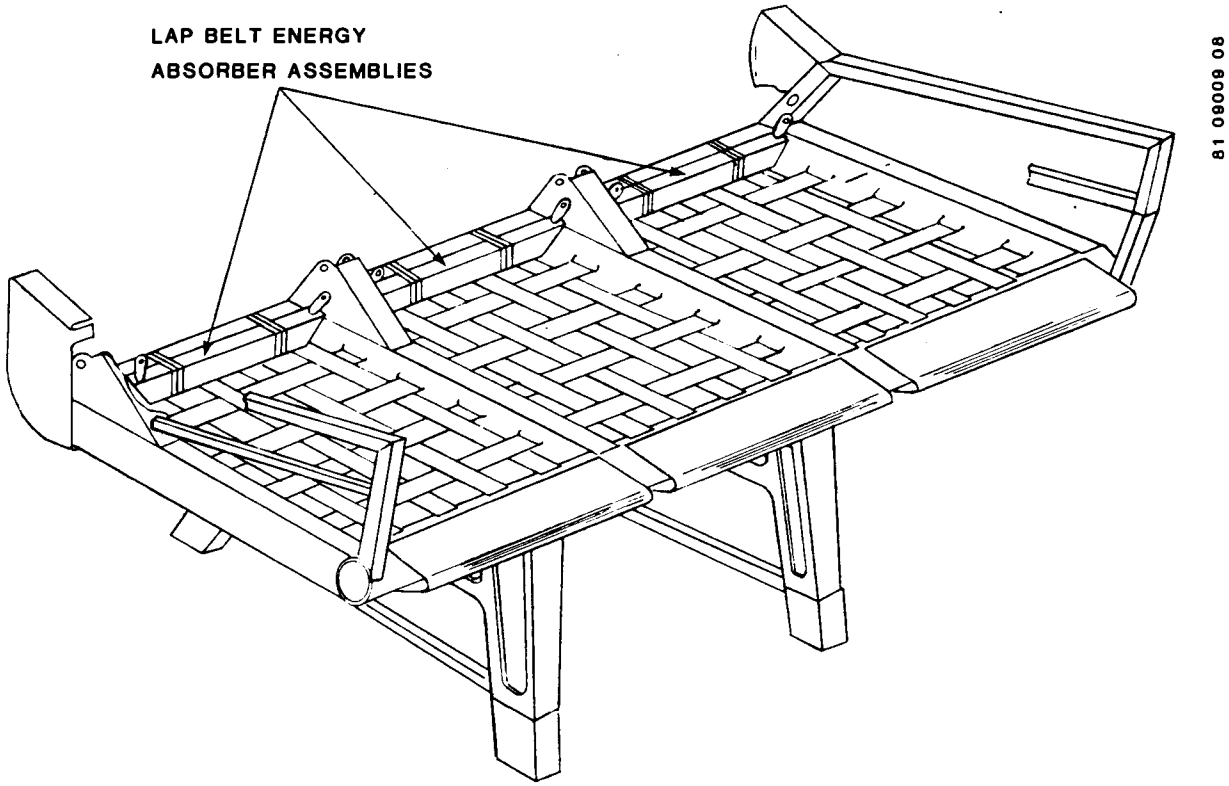

Figure 8. Seat pan of the Hardman passenger seat with lap belt energy absorber.

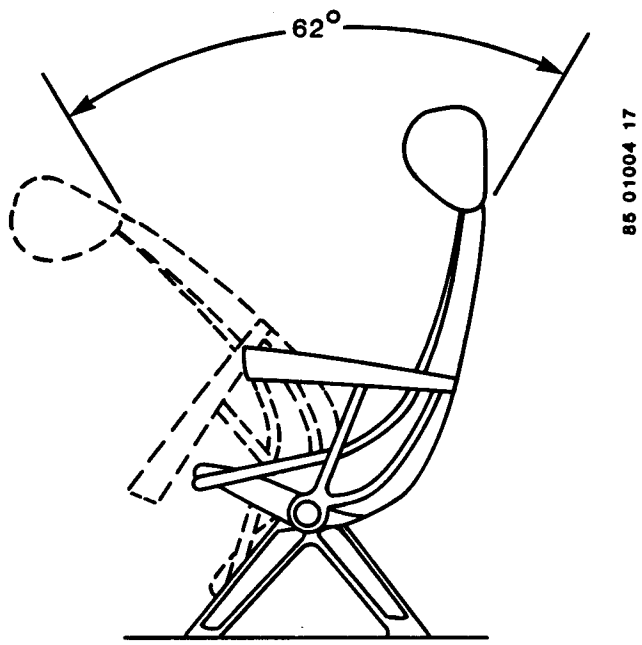

Figure 9. Energy-absorbing motion of the TECO Mason seat.

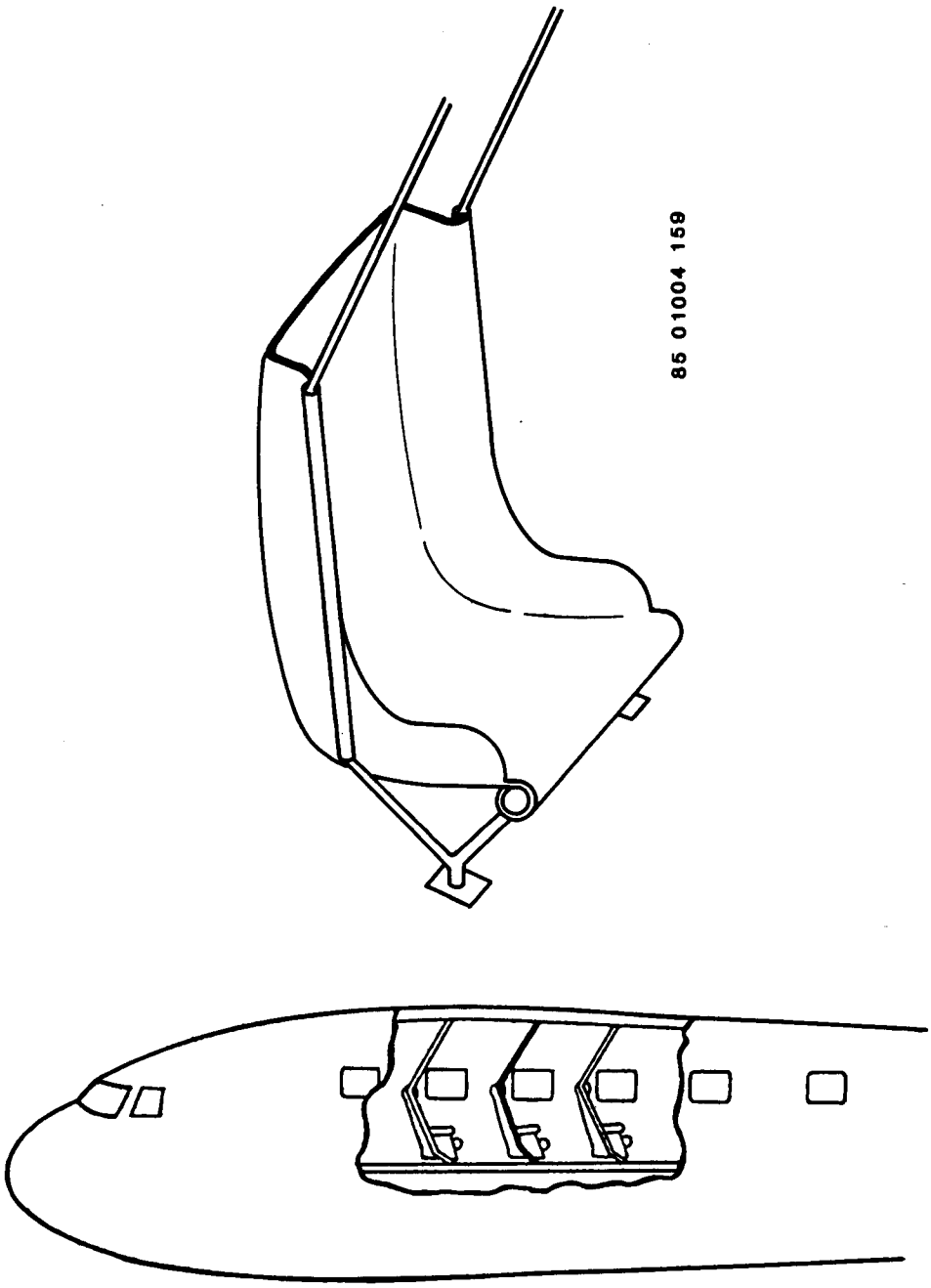

Figure 10. Energy-absorbing passenger seat developed at Wayne State University.

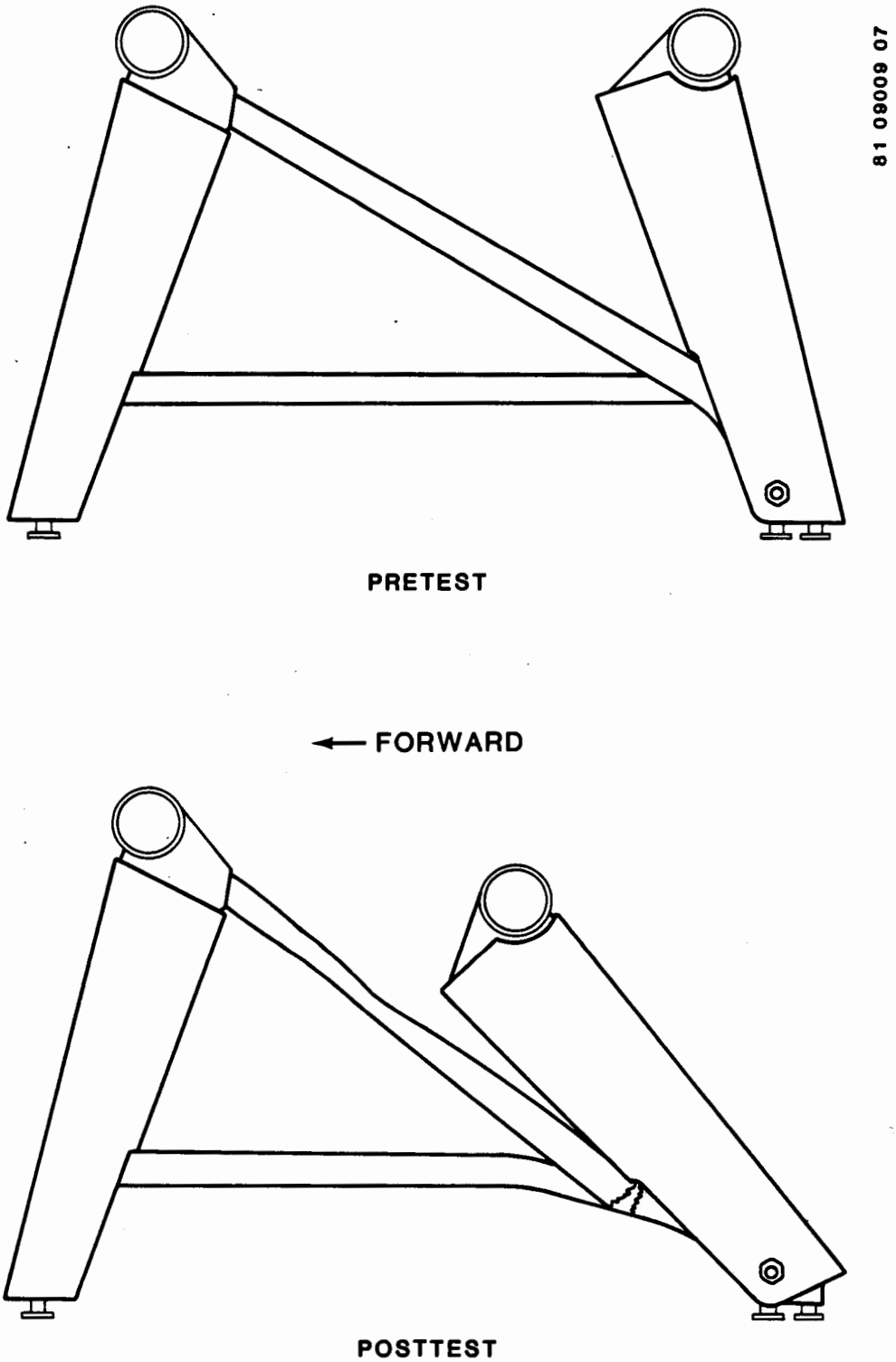

Figure 11. Leg deformation of the Hardman 8727 seat after forward static test.

DESIRED CRASH PERFORMANCE OF A TRANSPORT SEAT

Because of their relatively large size and the nature of their construction, transport aircraft do not impose as high an acceleration on the seat structures as do smaller aircraft in a crash. This is due to the relatively large amount of metal structure ahead of and beneath the cabin, which can crush and thus limit the cabin floor accelerations. The survey of human tolerance data by Laananen (reference 29), shows that human tolerances to acceleration levels exceed the minimum levels seats are required to meet. Therefore, the required function of a seat and restraint system in a transport crash is to retain the occupants in position throughout the crash. No energy- absorbing features are needed to limit accelerations in any direction in order to prevent whole-body acceleration injury. The use of load-limiting devices is believed to be unnecessary for keeping inertial loads within human tolerance on a transport. However, such devices may be beneficial for limiting the loads on the existing floor structure if it has inadequate strength to withstand the probable inertial loads in a crash. In an existing transport, the floor can be overstressed under forward loading. Load limiters within the seat structure can greatly increase the amount of dynamic crash input that can be sustained on the existing floor. If the load limiters allow forward stroking of the seat, this might have an adverse effect on the occupant by reducing the "strike" envelope between the occupant and the seat immediately in front, unless the seat in front also strokes forward. Regardless, it is still preferable to have controlled rather than uncontrolled forward motion of the occupant.

While inertial loads acting on the seat and occupants are the most obvious cause of seat failure, a transport crash frequently imposes another input to the seat structure: the deformation of the floor structure. Such deformation can easily induce an overstress condition and even failure, as has been shown in laboratory testing at the FAA Civil Aeromedical Institute (CAMI) (see section entitled "CID Seat Program"). In those tests, one floor track was rolled outward 10 degrees and the other pitched downward 10 degrees. This limited deformation was sufficient to induce failure in some seats even before test loads were applied. In many others, performance under inertial loads was decreased. The seat must have structural releases to allow it to deform without failing when subjected to floor deformation, or the combination of floor deformation and inertial loads.

The first area requiring modification to permit deformation in a transport seat system is the track fitting and/or track. Present fittings have no stress release about the roll axis. If the seat leg experiences this type of localized deformation, it is possible that either the fitting will fail or the track lips which hold the fitting down will fail. Ideally, the fitting should deform without failing and permit relative rotation between leg and fitting about both the roll and pitch axes. A torsional release (yaw axis release) may also be beneficial in the presence of localized deformation, but is believed to be less essential than the others.

In addition to a release at the track/leg interface, the seat structure itself must be able to deform without failing when the surface on which it is mounted warps. This can be achieved by releasing the seat pan torsionally so that it can warp in response to general deformation of the floor without inducing destructive stresses. Another approach is to allow one or more legs to extend so that they can accommodate a surface which is no longer flat.

Release requirements peculiar to a specific seat design may also be required. The testing of the structure should demonstrate that, as a minimum, pitch and roll of the floor tracks relative to the seat will not cause failure, nor induce internal stresses so high that premature failure under inertial loading will occur.

The attachment locks between the seat track fittings and track are also a consideration. Presently, it is standard practice to lock only the rear fittings to the track. If the seat or floor deforms, the front fittings can slide out of the tracks. This actually happened in the CID. Seat retention under warped floor conditions requires that all floor fittings be locked to the track.

To effectively retain the occupant in position, an effective restraint system is also required. A system with a shoulder strap might reduce flailing injury (head, torso, and arms). It would also reduce destructive dynamic-overshoot effects on the structure caused by flailing (the breakover feature of the seat back would have to be deleted). However, transports do not employ shoulder straps at this time. Existing lap belts appear to have greater strength than the seats, and they probably require no improvements at this time. Care must be taken to arrange lap belt angles so as not to induce injury to the spine or internal organs. In general, as transport seats have become more compact, the belt angle has improved. However, the restraint should be arranged to minimize injury, and the necessary attachment points should be located accordingly during seat design.

In addition to restraining the occupant during the crash, it is desirable that the seat itself not inflict injury during occupant/seat impact. This occurs primarily between the occupant and the seat in front. These hazards have been discussed in references 30 and 31. Primary hazards are head impact with the seat back and food tray, and the aft end of the armrests. Seat backs are all designed to "breakover", allowing forward rotation around a pivot, but injuries still occur because there is not sufficient padding to reduce the severity of head impact. This is also true of the structural members under the seat pan which inflict leg injury. All potential impact surfaces must be delethalized by softening the surface and by avoiding sharp corners on edges to spread the load over a larger area, or both.

If the seat does fail, it should preferably do so in a way which keeps exposure to lethal objects to a minimum. For example, many existing seats fail by separating from their legs. The legs remaining in the floor may present a very lethal object. It would be better if, at ultimate failure, the leg separated from the floor and remained attached to the seat.

The placement of the seat in the aircraft, as well as its design, can affect survivability. Reduced pitch can make it impossible for occupants to assume the brace position should they have the opportunity, and can increase the probability of impact with lethal objects such as armrests. Close spacing of the seats may result in reverse flexure of the spine, as well as become an impediment in egress, and increase floor loading. Crash survivability should be a consideration in the determination of pitch.

Seats should also be placed away from known fuselage fracture points. Since these points are somewhat predictable, and enough accidents have occurred such that their locations are reasonably well known, nothing should be placed at these fracture points.

CID SEAT PROGRAM

The crashworthiness program goals for the Boeing 720 Controlled Impact Demonstration were to study the crash performance of transport seats and develop experiments for the CID which would demonstrate means of improving passenger survival through more crashworthy transport seats.

The factors which influence seat performance during a crash impact were identified and studied. These factors are described in the section entitled "Desired Crash Performance of a Transport Seat." Concepts were then developed that could be applied to transport seats to improve both the seat and passenger's survival. Since the CID experiments were based on altering existing seats, the modifications made to them were not to affect or change their intended use aboard existing aircraft.

CID SEAT DEVELOPMENT

The development of the modified seats for the CID was directed by considering the identified failure modes of transport seats, and then applying the following design goals to existing production seats:

- Limit loads to avoid overstressing the seat structure or floor track.
- Add lateral bracing without interfering with carry-on baggage space or with feet and leg space.
- Design track fittings that allow for floor deformation and fit existing floor tracks.
- Modify the seat structure to accommodate bending, twisting, or warping of the floor.

The seats were designed to sustain a candidate triangular-shaped 18-G, 35-ft/sec forward input pulse, based on the criterion recommended in reference 2. Human tolerance considerations did not limit the development effort, since unidirectional tolerance levels are typically above the failure strengths of the modified seats. However, a primary consideration that influenced the overall effort was that of keeping to a minimum the increased weight resulting from the modifications. Although the effort was intended to develop concepts, and not production seats, the supposition was made that the concepts should have the potential for use in production and should be designed with attention to minimal weight.

Three different models of standard, three-passenger transport seats and one wall-mounted, fold-down flight attendant seat were used as baseline configurations for the modification effort. Two of the three-passenger seats were current production models, and the third was a model built in the early 1970's. All three had the same asymmetric leg configuration, such as is common to the offset floor track in Boeing 707/720, 727, 747 and 767 aircraft (figure 12). The flight attendant seat was similar to the jumpseats used on Boeing 737 aircraft.

Six types of modified seats were developed from the three-passenger seats, and one modification was made of the flight attendant seat. Each modification is not described in detail within this report, since they all were based on the same design goals. The following examples give an overview on what was achieved from the modification effort.

Load limiting was accomplished by placing within the seat structure energy absorbers designed to begin stroking when decelerative loads in the forward direction reached 9 G. If sufficient energy in the form of an impact pulse were applied to the seat and occupants, the stroking would continue through 6 in. of forward movement. A limit load of 9 G was chosen because that was the minimum FAR requirement, and it was assumed that the aircraft floor track should at least be able to withstand the loads imposed by the minimum requirement. Various configurations were developed, using energy absorbers in the rear legs or diagonal braces (or both), the lap belts, and in the case of an aft-facing modification, the front legs relative to the aircraft (figure 13).

Lateral bracing was added to strengthen the seats in the aisleward direction. To avoid interfering with carry-on baggage space, the bracing was confined to the plane of the front legs and the plane of the seat pan structure (figure 14). A 10-G lateral design goal was selected initially. It was found, however, during the design of the seat modifications that a single 10 G lateral load objective might impose an unacceptable weight penalty, depending on the seat structure. Therefore, the criterion was reduced to a lower G level for some modified structures.

The down load capability of current seats is greater than required by the existing FAR and was thus not an area of as much concern.

To allow seat track fittings to comply with floor deformation without failing, a prototype track fitting was developed that was used on all four legs of the seat modifications. The fitting was made out of a relatively ductile material designed to deform extensively without fracture, therefore providing a plastic hinge that allowed more than 30 degrees of track roll or leg bending without failure (figure 15). Comparative tests were made between this fitting and four others currently used on transport seats. Contrasted with the strongest standard two-button fitting tested, the prototype three-button fitting was 1000 lb stronger in the upward direction, had equal strength in the forward direction, and weighed one ounce less. Furthermore, the standard fitting had no roll release capability.

Designing releases into the seat structure to accommodate floor warping entailed such modifications as gimbaling seat/rear leg attachment joints and allowing the lateral support tubes to rotate within the supports connecting them. Essentially, the objective was to permit motion of the legs relative to the seat pan without overstressing them or the seat pan structure.

It was not practical to incorporate vertical load-limiting features into the flight attendant seat because both the seat and restraint system were mounted to the bulkhead. Relocating the restraint attachments to the seat structure was deemed impractical due to possible seat-to-wall attachment overloads.

Energy-absorbing stroke in the forward direction would encroach into emergency exit areas, and was deemed unacceptable. Thus, the modification was

confined to strengthening the seat in the vertical direction from an ultimate load of 7.5 G to an ultimate load of 10 G.

In designing a seat and restraint system, it is always desirable to avoid ultimate failure or uncontrolled motion of the system. When it is not possible to design for controlled motion, as in the flight attendant seat, the best alternative is to strengthen the system so that ultimate failure will occur at a higher load, and improve the probability that the occupant will remain restrained during a crash. It might be argued that loading 10 G into the spine is worse than 7.5 G. However, when the resulting spinal loads from impacting the floor several feet below are considered as the alternative, strengthening the system is the logical choice.

Similarly, a transport seat designed to stroke through 6 in. at 9 G is different from a standard seat that may not fail, but experiences a forward displacement when subjected to 9 G. As an example, the modified CID seats stroked 3 in. when tested at the pulse shown in figure A-2. The standard, non-stroking seats failed at approximately 100 msec, or halfway through the pulse. This is equivalent to about 1-1/2 in. of forward stroke. The difference between the seats is the difference between increasing the occupant "strike" envelope by 1-1/2 in. or allowing the occupant to move forward unrestrained. As the transport accident section of this report shows, there are several incidents of passenger injuries in seats which did not fail, but displaced forward. Forward stroking of a seat is a form of forward displacement, but it must not be assumed that the injuries would still occur.

TESTING

In order to assess the performance of the standard and modified seats, they were subjected to forward static and dynamic tests. The static tests were performed according to the procedure in NAS 809, the same method used by manufacturers in certifying their seats. Body blocks were placed in each seat position and then slowly pulled in unison by hydraulic cylinders (figure 16). Simultaneously, the applied loads and displacements were measured and recorded. Standard seats were pulled to destruction and modified seats were pulled until the energy absorbers had fully stroked, verifying their intended design. The lateral tests were static only, and were performed in the same manner as the forward tests. The flight attendant seats were subjected only to downward static tests.

Results from the forward static tests showed the standard seat built in the early 1970's had an ultimate strength of 11.2 G, while one of the newer seats failed at 9.1 G. Failure locations of two of the standard seats are shown in figures 17 and 18. In figure 17, the rear lateral seat pan tube ruptured at the outboard rear leg attach point. The seat in figure 18 failed at the fitting which attaches the outboard rear leg to the seat pan tube.

When subjected to lateral tests, the standard seats failed between 3.3 and 4.5 G. The lowest ultimate lateral strength of the modified seats was 6.9 G and the highest was 10.4 G.

A trapezoidal-shaped input pulse of 9 G and 50 ft/sec was used to test the seats' dynamic capabilities (see figure A-2). This pulse was chosen because it had been used by the FAA Civil Aeromedical Institute (CAMI) in a prior series of tests performed on in-service transport seats and comparative

results were desired. To study the seats' reaction to floor deformation, the inboard track was pitched down 10 degrees and the outboard track was rolled out 10 degrees prior to the dynamic tests (figure 19). All of the standard seats failed the dynamic tests with floor deformation such that the seats be came completely detached from the floor tracks on the test fixture (figure 20). Conversely, the modified seats remained affixed to the floor track and used only half of their available energy absorption capability (figure 21). After completion of the static and dynamic verification tests, new modified and standard seats were placed aboard the Boeing 720 CID aircraft (figure 22). Additional seat experiments were installed by NASA and the FAA. The NASA experiments consisted of a standard and modified triple passenger seat, and the FAA experiment was a new, state-of-the-art, composite, triple-passenger seat.

Further details concerning the development and description of the modified seats, the rationale, assumptions, criteria, and performance testing are in reference 1. It contains discussions of all the work pertaining to the seat experiments up to the actual crash test.

CID PERFORMANCE

The impact forces experienced by the seats during the CID were not severe enough to allow a differentiation between the performance of the standard and modified seats. Consequently, none of the energy-absorbing seats stroked.

Potential problems associated with not having proper structural releases was demonstrated by a ruptured floor track beneath one of the standard seats. A gear hub impacted the bottom of the outboard floor beam directly beneath the track cover bar that connects the front and rear seat legs. The track broke and assumed the shape of an inverted V. Since the track cover bar was lying flush over the floor track, it assumed the same shape. However, the stiff leg structure could not conform to the deformation, and consequently the front track fitting button came out of the track, leaving the seat supported by three legs but still in place. Some lateral buckling was observed on the rear legs, but the acceleration data indicated that this occurred after the front button was dislodged.

Film from within the cabin showed that a standard seat did experience a lateral failure during the slideout along the rock bed runway. Since the seat was uninstrumented, it was not possible to evaluate its performance.

Another standard seat, situated directly over the floor break at Body Station 920, was thrown over onto its back. Seat performance at floor separation points cannot be significantly influenced by seat design, so this event was inconclusive.

The postcrash fire completely destroyed three seats installed by Simula and RMS and the two NASA seats. The remaining seats received varying degrees of fire damage.

As previously mentioned, a complete test report detailing the results of the Simula seat experiments aboard the 720 is provided in reference 2.

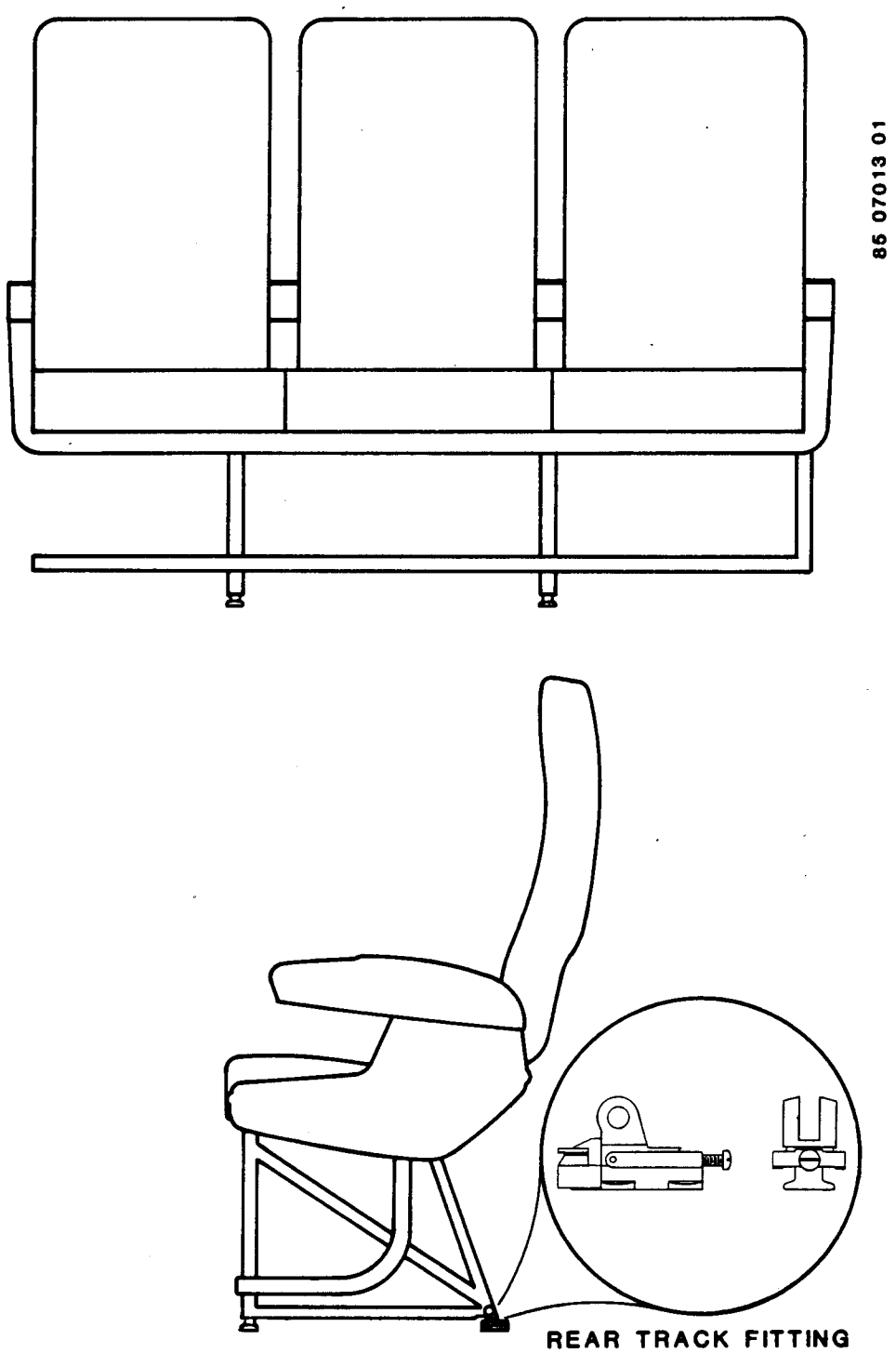

Figure 12. Typical triple-passenger transport seat with asymmetric leg configuration.

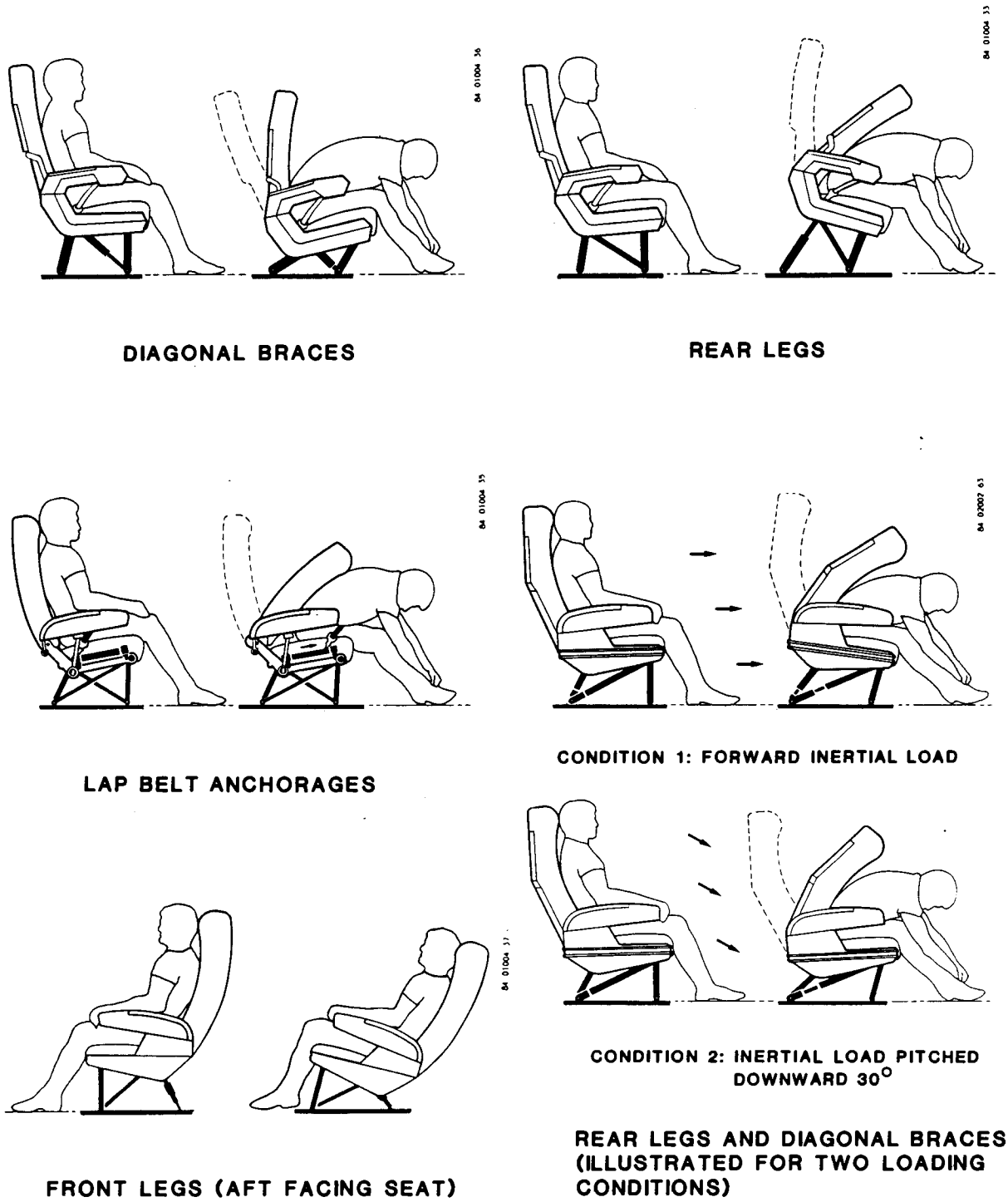

Figure 13. Examples of various load-limiting methods for CID transport seat experiments.

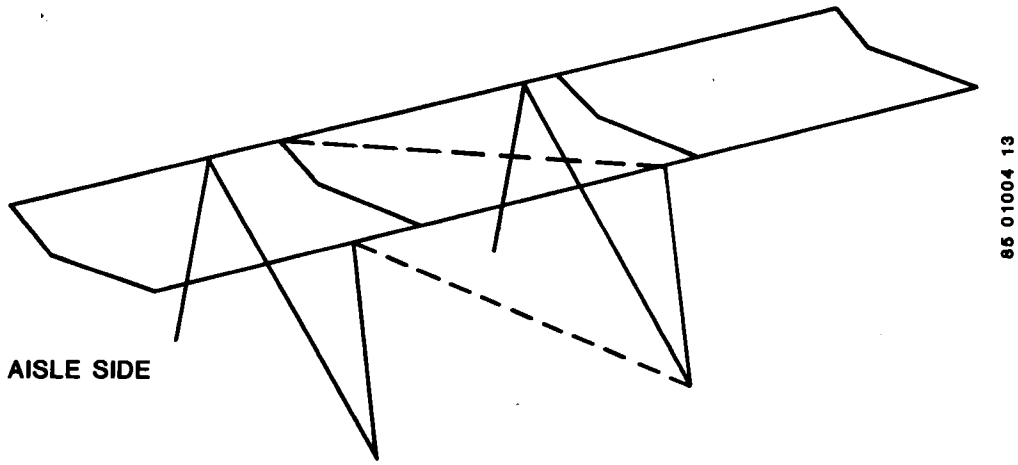

Figure 14. Example of lateral bracing applied to the CID seat experiments.

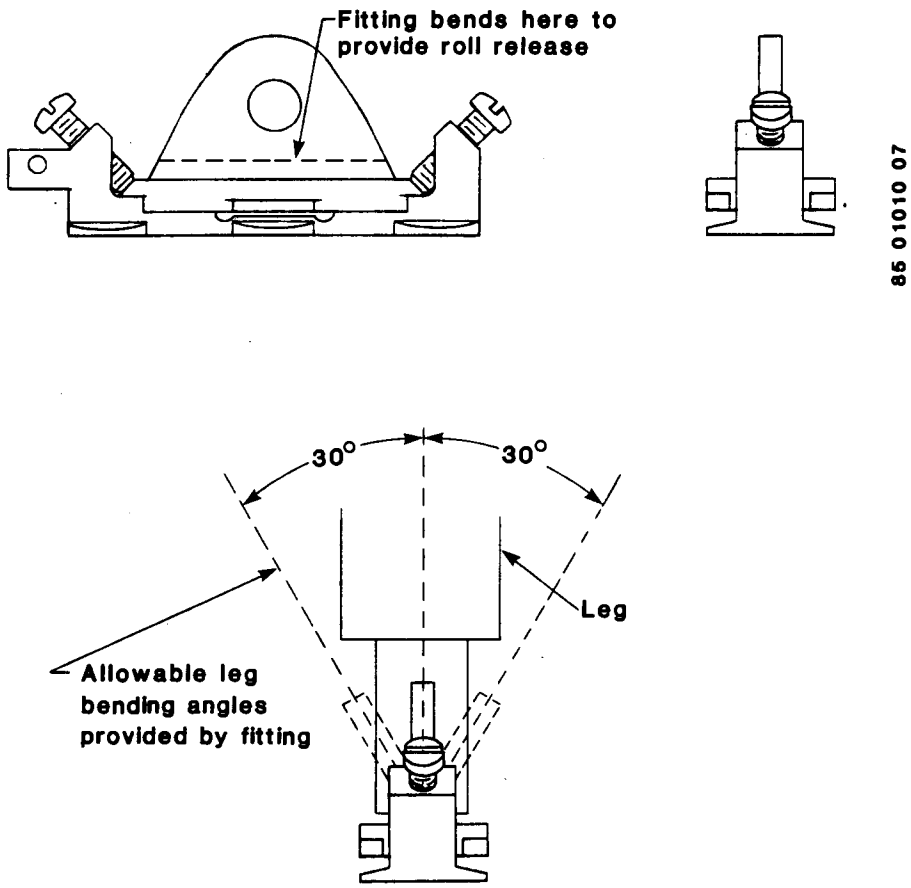

Figure 15. Prototype track fitting used on the CID modified seats.

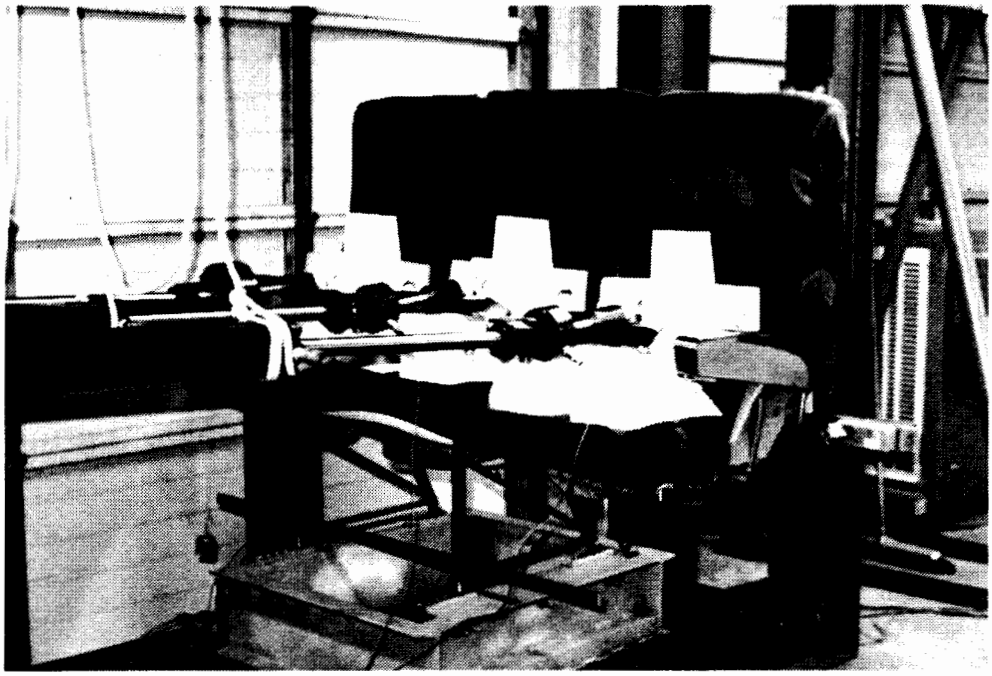

Figure 16. Forward static test arrangement.

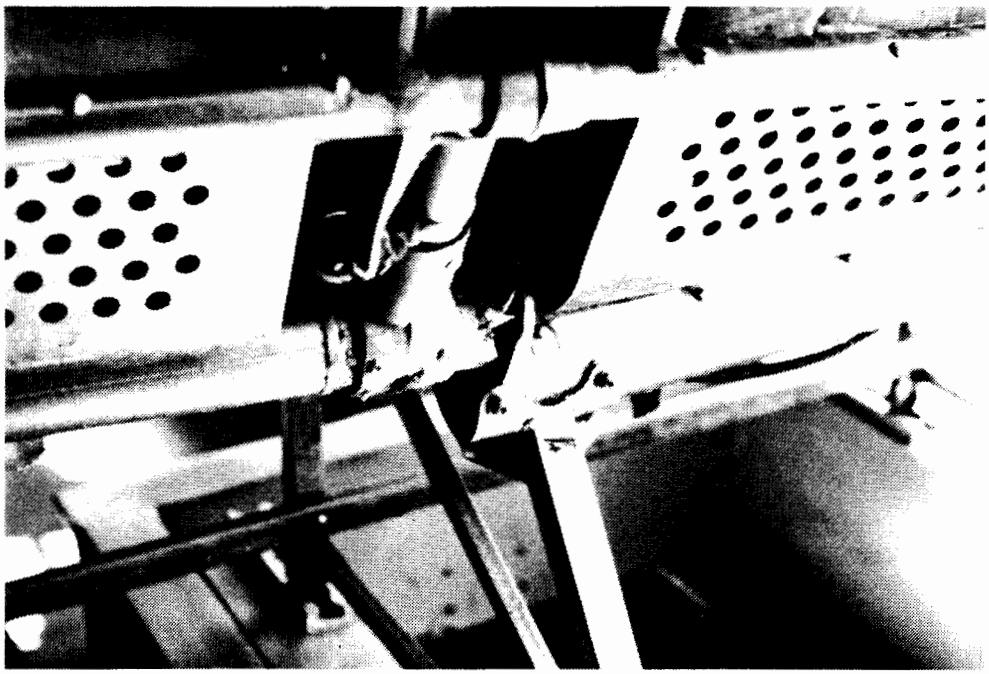

Figure 17. Forward static test failure location of standard seat (Example 1).

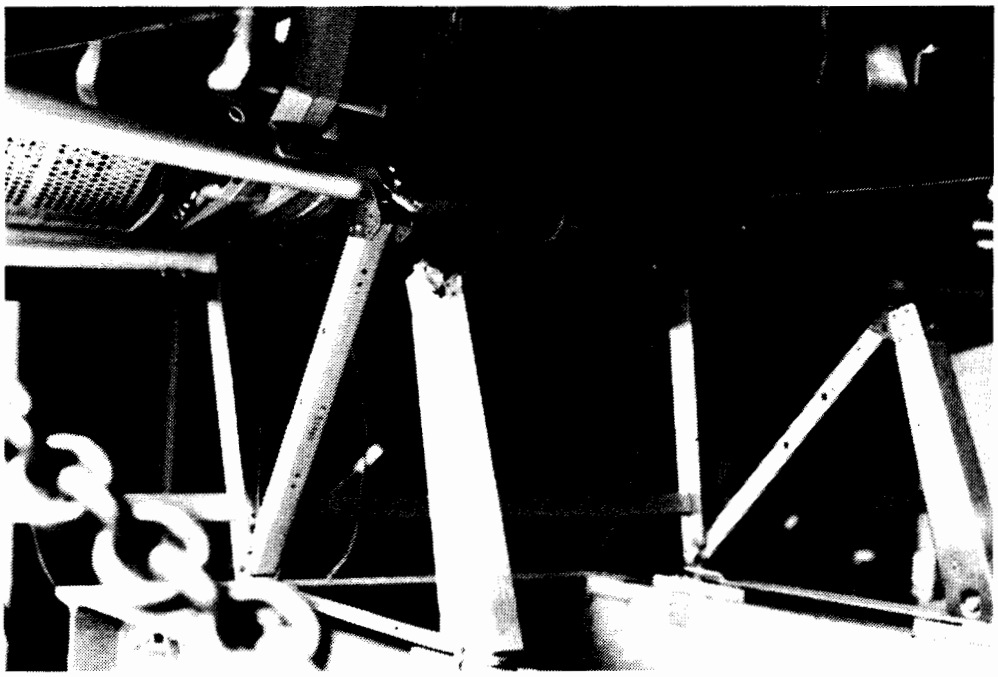

Figure 18. Forward static test failure location of standard seat (Example 2).

Figure 19. Floor deformation prior to dynamic testing.

Figure 20. Standard seat after dynamic testing.

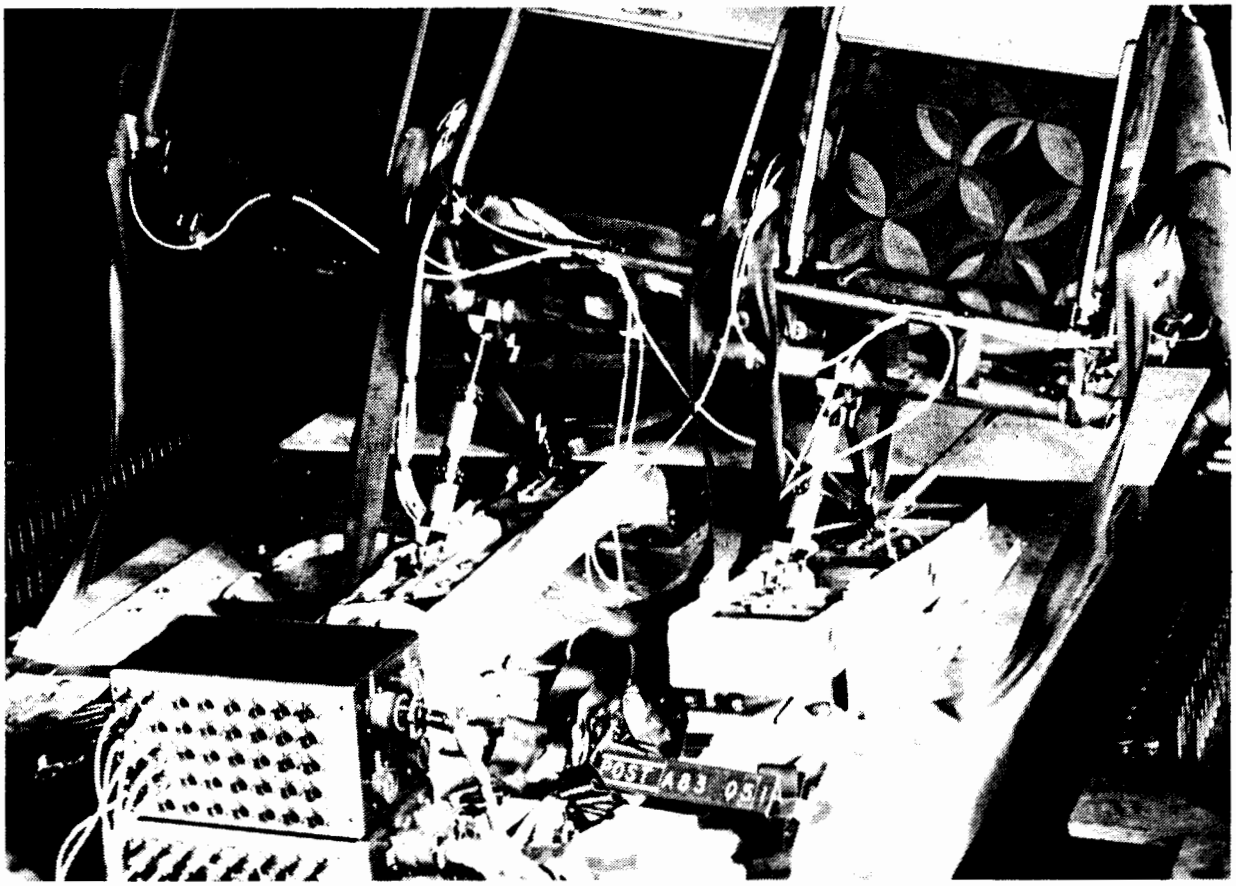

Figure 21. Modified seat after dynamic testing.

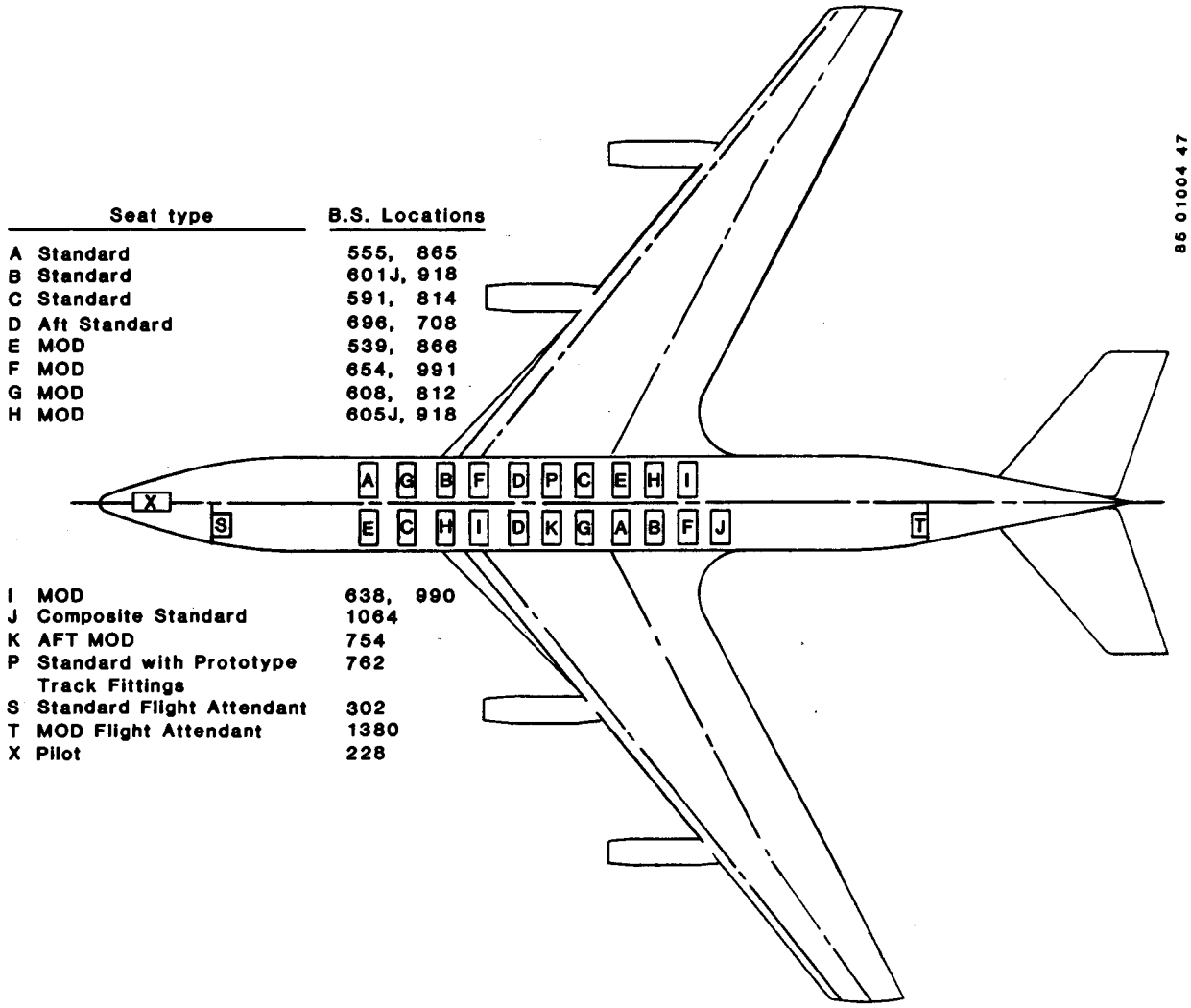

Figure 22. Location of CID seat experiments aboard 720 aircraft.

TRANSPORT SEAT PERFORMANCE IN ACCIDENTS FROM 1970 TO 1983

In preparation for the cost/benefit study, transport crash investigation files were studied to identify instances where an improved seat and/or restraint system might have been beneficial. The files used were those at CAMI in Oklahoma City and the NTSB in Washington, D.C. These files were screened for severe survivable crash data, and all injury data in these crashes were compiled. Particular attention was directed towards instances where coincident injury and seat failure data were recorded.

The CAMI files were selected for study because it was understood that they had the most complete photo coverage of both structural damage and injury. Crash site photos and morgue photos were included. Detailed photo coverage was considered most important because the injuries were to be correlated with their cause wherever possible.

The crashes of interest were severe survivable crashes. These are crashes in which the seats and other interior components are loaded to near failure or beyond, but there is still an opportunity for individuals to survive. Practically, crashes in which there was at least one seat failure were studied if there was a chance for survival. It was assumed that 100 percent of the occupants need not have had a chance for survival. For example, a crash in which a tree penetrates the fuselage and kills several occupants may still be survivable for many of the occupants. Likewise, a crash in which the fuselage separates into two or more pieces is frequently survivable for all but those occupants seated on or near the breaks. Survival of those inside the separated sections is not considered "survival by chance" so long as the fuselage section maintains a survivable volume in their vicinity and the seat and restraint keep them securely in that volume.

Initially, FAA Report DOT/FAA/CT-82-118 and NTSB Report NTSB-AAS-81-2 were used to identify severe survivable accidents. Approximately 70 accidents were identified in this way. Also, CAMI provided a listing of all accidents with any incidences of seat related problems. This was obtained by sorting their computerized crash files. The files for every accident on this listing were examined for useful information.

Prior to recording data at CAMI, the potentially useful files were screened to determine if the necessary information had been obtained and recorded by the accident investigators. Essentially, the screening searched for the presence of injury data, seat failure data, and the means of connecting the two. The latter necessitated a seating chart or similar information showing which injuries or fatalities occurred in which seats. Frequently, it was found that all of the needed data was not in the CAMI files. For files where needed information was missing, an attempt to supplement the data was made by visiting the NTSB and examining the files there. In this way, added data was obtained on a number of crashes.

However, even with the combined CAMI/NTSB data base, sufficient data was not obtained for many of the accidents. There are numerous reasons for this frequent lack of data. Many times, the aircraft is largely destroyed by fire and an investigation of postcrash structural damage is impossible, or it may sink in deep water and not be recovered. Sometimes, during the post-crash

rescue effort, seats are removed from the plane, making it difficult to reconstruct their original positions. Specific minor injury data is often difficult or impossible for the investigator to obtain because the passengers leave the area or refuse to be interviewed. Additionally, specific minor and major injury data were sometimes not in the files because the investigator's notes had been thrown out after the NTSB accident report was published. Unfortunately, the published report does not contain detailed injury data in large transport accidents

The resulting data compiled from the CAMI files consists of all known cases of coincident injury and structural (seat, restraint and surroundings) failure occurring in transport crashes since 1970. It is difficult to relate this sample of available data with the total of such occurrences in severe survivable crashes because the information is so often lost. Also, the occurrence of coincident injury and structural failure obviously does not automatically establish a cause-and-effect relationship. It was the intent of this study that the cause-and-effect relationships which did exist would be determined through detailed study of the failure and injury. For example, the shape of the wound and the presence of tissue on an impact object could prove the cause of an injury. However, with a few exceptions, the accident files did not contain sufficient information to make such determinations. Therefore, judgements were made as the files were reviewed as to whether an injury was of the type that could have been caused by the failure. This estimate of failure-induced or aggravated injury is the best information that can be obtained from the presently gathered crash investigation data.

After the seat performance and injury data were collected at CAMI, the accidents reviewed were compared with several reports by aircraft manufacturers (references 32 through 34) to identify other severe survivable accidents which may not have appeared in the aforementioned FAA or NTSB reports, or CAMI files. The purpose of this comparison was to identify the total population of documented aircraft crashes where seat performance could have been a factor in occupant survivability. The aircraft manufacturers' reports were originally written for the purpose of analyzing crash scenarios, and thus contained descriptions of all categories of crashes. Often the reports would overlap each other; one providing information the others lacked. This proved useful in identifying those accidents pertaining to the study. In total, 20 accidents between 1970 and 1983 were identified. However, only 15 contained sufficient information to make an assessment of the relationship between seat performance and injury.

The passenger injury and seat performance data were tabulated according to the behavior mode of the seat and the various types of injuries received by the passenger in that seat. Since the study was based on passenger seat performance, crew injuries were not tabulated. The breakdown of fatal, serious and minor injuries for each accident relate only to the passengers, unless a crew member was in a passenger seat. The data were tabulated only if specific seat and injury information were known, or if reasonable assumptions were possible with the available data. Every type of injury received by a passenger was noted, even multiple injuries. The purpose of this was to establish a matrix that related frequency of injury to seat behavior. The results from the data collection are shown in this form in table 1. Given a particular type of seat behavior, this table shows the frequency of

occurrence of certain types of injuries (expressed in percentages). The sum of each column is over 100 percent, since some passengers received more than one injury.

TABLE 1. FREQUENCY OF INJURY COMPARED WITH SEAT BEHAVIOR CHARACTERISTICS FROM ACCIDENTS REVIEWED AT CAMI

	Not Damaged (Percent)	Displaced Downward (Percent)	Displaced Laterally (Percent)	Released (Percent)	Displaced Forward (Percent)
Minor or No Injury	93	77	88	6	62
Face and Head:					
Fracture	0	4	0	22	0
Laceration	1	8	0	7	15
Concussion	1	0	0	6	8
Spinal Fracture	2	15	4	28	31
Shoulder Fracture	0	1	0	2	0
Rib Fracture	1	2	8	9	0
Sternum Fracture	0	1	0	1	8
Pelvis Fracture	0	0	0	3	0
Leg:					
Fracture	0	0	0	19	8
Laceration	0	2	0	3	0
Arm:					
Fracture	0	2	0	6	0
Laceration	1	0	0	1	0
Abdominal Contusions	4	0	8	1	8
Number of Passengers Reviewed	232	132	26	86	13

Of these individuals, 354 received minor or no injuries and 135 received serious or fatal injuries. Since the tables include all individuals exposed to the accidents, there are cases of injury in undamaged seats and cases of no injury in damaged seats.

While it was not possible to identify specific cause-and-effect relationships when gathering the data, as discussed previously, certain injury distributions suggest a cause-and-effect relationship. For example, table 1 shows that most arm, skull, and leg fractures are coincident with separation of the seat from the airframe. Spinal injuries are associated with downward or forward seat failure, and head concussions and lacerations occur in conjunction with forward displacement or separation of the seat.

The nomenclature used to define seat performance needs definition at this point. 'Displaced downward' means that the passenger has moved vertically closer to the floor by the seat pan fabric failing, the legs buckling, or the crosstubes bending. A seat that has 'displaced laterally' has shifted into the aisle due to the legs bending sideways. A 'released' seat has experienced complete detachment or separation, allowing the passenger to experience unrestrained forward motion. A seat that has 'displaced forward' has moved forward due to some failure or bending of the seat structure, but is still attached or partially attached to the floor. Often, seats experienced several modes of failure such as moving laterally into the aisle then down onto the cabin floor. In these cases, the primary failure mode was used as the descriptor.

It is also necesary to define a 'serious injury' as related to the data collected, because the injury distribution for each accident does not always equal the NTSB's. The list of injuries in Table 3 are considered 'serious' in nature. This coincides with the NTSB's description except the NTSB includes any injury which requires hospitalization for more than 48 hours commencing within 7 days of the accident. Using this study's definition of a serious injury tended to make the quantities of identified serious injuries less than those reported by the NTSB.

The accidents identified for this study were divided into three categories according to the postcrash condition of the aircraft cabin. Each accident category is described in the following paragraphs.

CATEGORY 1

The main portion of the cabin remains intact, without any breaks in the fuselage. This includes crashes where the tail section, engines, or wings break off, as in the 1976 Philadelphia DC-9 crash. In this case, the tail section seperated, but the cabin remained intact. Those crashes where the cockpit was crushed or seperated, or there was floor disruption are also included.

CATEGORY 2

The cabin area experiences one or several fractures, but remains relatively in-line. Two examples are the 1976 Ketchikan 727 and the 1972 Chicago 737 crashes.

CATEGORY 3

The cabin separates into several sections and scatters over an area. This occurred in the 1970 and 1976 St. Thomas 727 crashes.

CATEGORY 1 ACCIDENTS

The seven accidents listed in table 2 were identified as being in Category 1. Those having an asterisk were reviewed at CAMI, and the passenger injury and seat performance data collected from them are summarized in table 3. The assumptions that were made as the data were collected are explained for each accident.

TABLE 2. CATEGORY 1 ACCIDENTS

		A/C	No. of PAX	Injuries (F-S-M/N)
05/02/70	St. Croix	DC-9	59	22-11-26
* 11/27/73	Akron	DC-9	21	0-10-11
* 11/27/73	Chattanooga	DC-9	74	0-1-73
* 06/23/76	Philadelphia	DC-9	102	0-30-72
* 05/08/78	Pensacola	727	53	3-6-44
* 03/17/80	Baton Rouge	DC-9	46	0-2-44
* 02/17/81	Santa Ana	737	106	0-3-103

* Reviewed at CAMI

5-2-70/St. Croix/59 PAX/22F-11S-26M/N

The aircraft ditched at sea and floated between 5 and 6 minutes. The major sections of the fuselage remained intact. Passengers described the impact as severe to violent. Survivors' testimony and fatality locations associated at least five deaths with released seats. Half of the survivors reported seats

TABLE 3. PASSENGER INJURY INFORMATION COMPARED WITH SEAT PERFORMANCE FOR CATEGORY 1 ACCIDENTS REVIEWED AT CAMI

	Seat Performance				
	Not Damaged	Displaced Downward	Displaced Laterally	Released	Displaced Forward
Number of Occurrences	198	132	26	0	13
Number of Fatalities	0	0	0	N/A	0
Number of Minor or No Injuries	184	102	23	N/A	8
Number of Serious Types of Injuries					
Face and Head:					
Fracture	1	5	0		0
Laceration	2	11	0		2
Concussion	3	0	0		1
Spinal Fracture	5	20	1		4
Shoulder Fracture	0	1	0		0
Rib Fracture	3	3	2		0
Sternum Fracture	0	1	0		1
Pelvis Fracture	0	0	0		0
Leg:					
Fracture	0	0	0		1
Laceration	0	3	0		0
Arm:					
Fracture	1	2	0		0
Laceration	1	0	0		0

being torn loose at impact. This could be confused with the breakover feature of seat backs. Sixteen passengers were hospitalized. Their injuries consisted of 13 spinal fractures, 4 rib fractures and 1 shoulder fracture. It is not known how many passengers drowned. Some probably did, but some drownings could have been caused by debilitating injuries incurred during the impact. According to the frequency of injuries shown in table 1, the combination of spinal fractures, rib fractures, and shoulder fractures have a greater degree of occurrence in released seats and secondly in seats displaced downward, a ratio of approximately 2:1. This observation, combined with the survivors' testimonies, creates the possibility that two-thirds of the serious injuries and fatalities could have been influenced by seats displacing downward, then separating from the floor. It is estimated, therefore, that 14 fatalities and 7 serious injuries could have been influenced by released seats.

11-27-73/Akron/21 PAX/OF-10S-11M/N

During landing, the aircraft overran the end of the runway, traversed 110 ft of unpaved ground, went over a 38-ft embankment, and landed flat. Both engines and the tail section broke off. The occupiable area of the fuselage remained intact and the cabin floor deformed between rows 11 and 16. Overhead hat racks collapsed and caused injuries.

Seventeen passengers and the 10 serious injuries are accounted for. It is assumed the remaining four passengers were uninjured and their seats were undamaged. There was no indication of seats failing.

11-27-73/Chattanooga/74 PAX/OF-1S-73M/N

While landing, the aircraft first struck an approach light, a dike, and then more approach lights before coming to rest. The left engine and wing separated at the dike. Floor distortion occurred from row 29 to the rear galley and the floor track fractured and separated between rows 29 and 31.

There were only four recorded cases of seat damage and related injuries. It is assumed that the remaining 70 seats were undamaged and the passengers sustained minor or no injuries. No seats released or displaced forward.

6-23-76/Philadelphia/102 PAX/OF-30S-72M/N

While attempting a go-around during an approach, the aircraft struck the runway tail-first. The tail and both engines separated and the remaining fuselage and wings slid along level ground. Floor buckling occurred above the main landing gears.

Detailed data was available on 94 passengers and seats, including the 30 serious injuries. Three other passengers were children in parents' laps. The remaining five passengers were all in seats that experienced downward deformation and are assumed to have either minor or no injuries. There were five seriously injured passengers whose seats either released or displaced forward.

5-8-78/Pensacola/53 PAX/3F-6S-44M/N

During approach, the aircraft struck and came to rest in water about 12 ft deep. A large hole was torn in the floor in the rear of the aircraft, but the cabin remained intact. Distortion of the floor track occurred under row 28.

The three passenger fatalities were caused by drowning. Only 52 passengers were onboard, but a flight attendant, who was seriously injured, was sitting in a passenger seat that displaced forward. However, there was extensive track distortion at this location. The remaining five serious injuries and 20 minor injuries were in seats that were undamaged. It is assumed that the other 24 passengers received minor or no injuries and were in undamaged seats.

3-17-80/Baton Rouge/46 PAX/OF-2S-44M/N

After landing, the aircraft skidded off the runway and into muddy ground. The nose struck a ditch and the aircraft rotated clockwise about 135 degrees. There was reported to be body deformation in the region of the damaged seats.

The two serious injuries and 18 minor injuries are accounted for. Eleven of the minor injuries occurred in undamaged seats. It is assumed that the remaining 26 passengers had minor or no injuries and sat in undamaged seats.

This accident does have an anomaly. Three unoccupied triple seat units experienced extensive failures; two units failed laterally into the aisle and one unit had a leg shear from the track fitting. There was no indication of floor disruption at these seat locations.

2-17-81/Santa Ana/106 PAX/OF-3S-103M/N

While attempting a go-around, the aircraft impacted the runway and swerved off it, rotating 90 degrees clockwise. A post-evacuation explosion made it impossible to document the condition of the floor and seats between rows 6 and 11, where the landing gear had collapsed.

Information was available on the three serious injuries and their associated seats. Sixty-one other seats were accounted for with locations of 31 minor injuries. Specifics on these injuries were unavailable. The remaining 72 passengers were not injured. Due to the post-evacuation explosion, it was not possible to document the remaining 42 seats. There was no evidence of injuries related to seat performance.

Assessment of Passenger Injuries in Category 1 Accidents

Based on the assumptions made and the data collected from the reviewed accidents, a determination was made of the population of passengers who could have sustained fatal or serious injuries from their seats releasing or displacing forward. This "at risk" population is shown in table 4.

TABLE 4. POPULATION OF PASSENGERS FROM CATEGORY 1 ACCIDENTS WHOSE INJURIES COULD HAVE BEEN CAUSED BY SEAT FAILURE OR FORWARD DISPLACEMENT

Accident	Fatalities	Serious Injuries
St. Croix	14	7
Philadelphia	0	5
Total	14	12

CATEGORY 2 ACCIDENTS

The accidents that fell under this category are listed in table 5, along with asterisks denoting those that were reviewed at CAMI. Detailed information concerning seat performance and passenger injury from the CAMI files is tabulated in table 6. The assumptions that were made when this data was collected are explained for each accident.

TABLE 5. CATEGORY 2 ACCIDENTS

			A/C	No. of PAX	Injuries (F-S-M/N)
*	3-3-72	Albany	F227	45	14-31-0
*	12-8-72	Chicago	737	57	42-10-5
*	7-23-73	St. Louis	F227	41	37-4-0
*	4-5-76	Ketchikan	727	43	1-6-36
	6-4-76	Guam	L188	33	33-0-0

*Reviewed at CAMI

3-3-72/Albany/45 PAX/14F-31S-OM/N

During final approach, the aircraft struck a house near ground level and buried the passenger section within and under the house. The bottom of the fuselage was demolished, the cabin floor was deformed upward longitudinally,

TABLE 6. PASSENGER INJURY INFORMATION COMPARED WITH SEAT PERFORMANCE FOR CATEGORY 2 ACCIDENTS REVIEWED AT CAMI

	Seat Performance				
	Not Damaged	Displaced Downward	Displaced Laterally	Released	Displaced Forward
Number of Occurrences	34	0	0	86	0
Number of Fatalities	0	N/A	N/A	44	N/A
Number of Minor or No Injuries	32	N/A	N/A	5	N/A
Number of Serious Types of Injuries					
Face & Head:					
Fracture	0			19	
Laceration	0			6	
Concussion	0			5	
Spinal Fracture	0			24	
Shoulder Fracture	0			2	
Rib Fracture	0			8	
Sternum Fracture	0			1	
Pelvis Fracture	0			3	
Leg:					
Fracture	1			16	
Laceration	0			3	
Arm:					
Fracture	0			5	
Laceration	1			1	
Unknown	0			3	

and the fuselage was deformed elliptically. Most of the seats had separated from the floor. Some seats had pieces of the floor track still attached to the legs. Information was available on all the passengers' injuries. All seats were occupied and most fatalities were seated in the first four rows. Due to the impact conditions and the uniformity of the injury pattern, the seat and injury data is tabulated on the assumption that all the passengers were affected by released seats. Either all the passengers were in released seats, or were struck by other passengers in released seats.

12-8-72/Chicago/57 PAX/42F-10S-5M/N

While on final approach, the aircraft hit power lines, then struck trees, telephone poles, and several houses. Breaks occurred in the right side of the fuselage forward of row 6 and between rows 9 and 10. The fuselage forward of row 6 was severely damaged while the remainder of the cabin remained fairly intact, allowing some passengers to evacuate before the fire.

The 11 passengers in the first-class section (rows 1-5) were all fatally injured. Autopsies indicated seven passengers received severe burns, two had extensive traumatic injuries, and two had both burns and trauma injuries. Due to the extensive destruction, this portion of the aircraft was assumed nonsurvivable. Of the 46 passengers in the coach section, there was information on where 31 of them were sitting and their injuries or cause of death. Combining this information with survivors' testimonies and autopsy reports, indicates that at least three seat rows displaced forward and two seat rows failed completely. The locations of some of these probable failures were matched up with the injuries; the results are shown in table 7. It is noted that the majority of survivors appear to have been in seats that displaced forward. Perhaps those passengers in released seats sustained injuries that prevented their escape. A description of the fatalities is also in table 7.

It is assumed that the 22 fatalities found to have high levels of carbon monoxide were either unconscious, unable to escape due to injuries, or trapped before being overcome by the fire. An exception to this might be children (three in this case), whose low weight might not have initiated seat failure, but who might have panicked or have been afraid to leave an injured parent.

7-23-73/St. Louis/41 PAX/37F-4S-0M/N

During approach, the aircraft struck several trees. Both wings and the main landing gear separated. The fuselage was found lying on its side and broken open circumferentially just aft of the cockpit. All passenger seats broke loose from the floor and were found with most of the passengers still in them. Because of the accident's severity, it is possible that seat failures were unavoidable due to the structural breakup of the aircraft. Seats in rows 4 through 7 (8 seats) on the left side were affected by a tree that penetrated the cabin. Detailed injury information was available on two surviving passengers and nine fatalities. These are tabulated under the category of released seats.

Only general information was available on the remaining fatalities. Typical injuries included: fractured extremities, skull fractures, crushed chests, dismemberment, decapitation, burns, and internal injuries. It is assumed that, of the 28 remaining fatalities, eight were affected by the tree impact. Therefore, 20 fatalities and the two remaining survivors are tabulated as having been affected by seat failure. In total, it is estimated that 29 fatalities and four serious injuries were caused by released seats.

4-5-76/Ketchikan/43 PAX/1F-6S-36M/N

After landing, the aircraft overran the runway and went into a ravine which was strewn with large rocks and tree stumps. The fuselage broke into three sections, but otherwise stayed together. The postcrash fire destroyed most of the seats.

TABLE 7. PROBABLE SEAT FAILURE MODES AND ASSOCIATED SURVIVORS' INJURIES, AND FATALITY DESCRIPTIONS FOR COACH SECTION OF 12-8-72 CHICAGO ACCIDENT

	Seat Performance	
	Released	Displaced Forward
Number of Minor Injuries	1	4
Number of Serious Injuries	2	8
Number of Types of Injuries		
Face and Head:		
Fracture	1	0
Contusion	1	10
Laceration	2	1
Spinal Fracture	0	3
Shoulder Fracture	0	1
Abdominal Contusions	2	4
Leg:		
Fracture	0	1
Contusion	2	5
Laceration	0	2
Arm:		
Fracture	0	3
Contusion	0	3
Laceration	0	1

31 Fatalities		
Burns	Burns and Multiple Trauma Injuries	80-90% CO In Blood
31	8	22

Detailed seat performance and injury information was available on 1 fatality, 6 serious injuries, and 14 of the minor injuries. Based on this information, the remaining 22 passengers are tabulated as having minor or no injuries, and being in undamaged seats. One fatality and two serious injuries were in failed seats.

6-4-76/Guam/33 PAX/33F-OS-OM/N

After takeoff, the aircraft struck gradually rising terrain, dragged the tail along the brow of a hill, dropped off a 13-ft embankment, went through a chain link fence, struck a vehicle, then burst into flames. Three of the four engines and the empennage separated from the fuselage. Parts of the fuselage were crushed and seats and passengers were found clear of the wreckage. Fire destroyed the aircraft. No detailed information was available, except that which was in the NTSB report. Many seats were reported by the NTSB to have come loose, and seats and occupants were found clear of the main wreckage area. Ten passengers died of various, severe impact injuries, and 23 passengers died from smoke inhalation and shock from severe burns. Some occupiable areas of the aircraft were crushed. It is assumed that the ten impact fatalities were in nonsurvivable sections of the cabin or were at fuselage breaks. The remaining 23 fatalities could have been affected by seat failures. Regardless of seat performance, this accident could have been nonsurvivable due to the intense fire.

Assessment of Passenger Injuries in Category 2 Accidents

Based on the assumptions made and the data collected from the reviewed accidents, a determination was made of the population of passengers who could have sustained fatal or serious injuries from their seats releasing or displacing forward. This "at risk" population is shown in table 8. Due to the lack of information and the severity of the St. Louis and Guam accidents, a population range is given.

TABLE 8. POPULATION OF PASSENGERS FROM CATEGORY 2 ACCIDENTS WHOSE INJURIES COULD HAVE BEEN CAUSED BY SEAT FAILURE OR FORWARD DISPLACEMENT

Accident	Fatalities	Serious Injuries
Albany	14	31
Chicago	22	10
St. Louis	0 to 29	0 to 4
Ketchikan	1	2
Guam	0 to 23	0
Total	37 to 89	43 to 47

Comparison of Category 1 and Category 2 Accidents

Tables 3 and 6 have some peculiar disparities. Table 3 shows that seats in the Category 1 accidents experienced downward and lateral deformation, but were never damaged so severely that they were torn from the aircraft. For Category 2 seats, it is just the opposite. All recorded seat failures resulted in separation from the airframe.

These differences can be explained by examining table 9, which briefly summarizes the crash scenarios for both categories. Except for one takeoff and a ditching, all accidents are landing accidents. These include short touchdown, overrun, and unsuccessful go-arounds. In general, the average approach

TABLE 9. CRASH SCENARIOS

		Phase	Object Hit Longitudinally	Comments
Category 1				
5/2/70	St. Croix	Ditching	None	Sank
11/27/73	Akron	Overrun	None	Went Off 36-ft ledge
11/27/73	Chattanooga	Approach	Approach lights Flood dike	Hit 1600′ short
6/23/76	Philadelphia	Go-around	None	Hit tail first
5/8/78	Pensacola	Approach	None	Hit short in water
3/17/80	Baton Rouge	Overrun	Ditch	Spun 135 degrees
2/17/81	Santa Ana	Go-around	None	Sunk into runway at 8 ft/sec, gear collapsed.
Category 2				
3/3/72	Albany	Approach	House	Abrupt halt
12/8/72	Chicago	Approach	Houses	Stall
7/23/73	St. Louis	Approach	Trees	Thunderstorm downdraft
4/5/76	Ketchikan	Overrun	Rocks	Slid down slope
6/4/76	Guam	T.O.	Gradually rising terrain	Long slide

scenario is similar to that selected for the CID as the most probable crash scenario. The thing that is distinctly different about Categories 1 and 2 is the nature of obstacles struck by the aircraft. Category 2 crashes struck houses, trees, and rising terrain. High forward decelerations were generated which separated seats from the aircraft. There was also greater damage to the fuselage, hence their appearance in Category 2. Vertical and lateral accelerations, however, were limited.

In Category 1 accidents, the aircraft hit no large obstacles, and there were no high forward decelerations. High vertical accelerations were generated in aircraft running over embankments and striking the ground tail-first in a stall. Those aircraft hitting ditches typically spun sideways and may have generated lateral accelerations in excess of existing seat strengths. Therefore, all aircraft crashes, selected on the basis of seat data availability (including both Categories 1 and 2), with the exception of a take-off and ditching, fit the most probable phase of flight criteria selected for the CID: a crash during final approach. The crashes differ from the CID in that they had a slightly higher sink rate or hit more substantial obstacles. The largest obstacles generated a very different crash environment for the same phase of flight than did the lesser obstacles. While CID accelerations were relatively mild compared to most crashes included in this study, the few seat failures which did occur were similar in nature to those in Category 1 crashes; lateral failure and downward deformation, but no forward failures. The fuselage break in the CID would, of course, place it in Category 2, but as such, it had an environment relatively benign compared with those included in the study. This was due to the localized impact with the wing openers which sliced through the fuselage, weakening it enough to cause the fuselage break.

CATEGORY 3 ACCIDENTS

The accidents listed in table 10 were identified as being in Category 3. The only complete information for these accidents was found in reference 35.

TABLE 10. CATEGORY 3 ACCIDENTS

	A/C	No. of PAX	Injuries (F-S-M/N)
11-27-70 Anchorage	DC-8	218	45-43-130
12-28-70 St. Thomas	727	48	2-9-37
4-27-76 St. Thomas	727	81	35-17-29

11-27-70/Anchorage/218 PAX/45F-43S-130M/N

During takeoff, the aircraft struck an ILS structure and several ditches. The fuselage broke into three major sections. A fire erupted and several explosions occurred before the aircraft came to rest. Passengers reported

three distinct and severe impacts. The majority of fatalities was caused by inhalation of combustion products and/or searing of the larynx and trachea. None of the fatalities showed evidence of impact injuries that would have impeded their escape. Common injuries to the survivors included fractured vertebrae and fractures of the lower extremities. Of the passengers whose seats had failed at the fuselage break, only one sustained an impact injury, a fractured vertebrae. Other survivors reported seat failures not associated with fuselage breaks, but the extensive fire damage and inability of the investigators to establish all the passenger seat locations prevented any conclusions about those failures.

12-28-70/St. Thomas/48 PAX/2F-9S-37M/N

After a hard landing, the aircraft bounced twice, yawed right, slid out of the airport boundary, and stopped on the slope of a hill. Before stopping, the aircraft broke into three major sections. Fractures occurred between rows 8 and 9 and between rows 19 and 20. The aircraft was destroyed by fire. The two fatalities were attributed to fire. One was reported by the NTSB as being trapped by debris between two seats. The serious injuries which occurred at impact, consisted of three spinal injuries, five types of bone fractures, one concussion, one shoulder dislocation, one spleen rupture, and six contusions. A majority of the survivors sustained seat belt bruises on the hips and abdomen. Passenger statements and an examination of the only seat not destroyed by fire, indicated that seats had failed to the left and forward. According to the passengers, at least seventeen of them were in seats that failed. Eight were in seats that were adjacent to the fuselage breaks.

The mixture of injuries and accounts of seat behavior, when compared to the frequency of injuries coincident with seat performance in table 1, would suggest that seats in this accident displaced laterally, forward, or were released. The locations of the passengers with serious injuries are not known. However, it is assumed that those injuries were probably associated with the displaced seats. Since half of the passengers in failed seats were not adjacent to the fuselage breaks, it is assumed that of the nine serious injuries, four were in seats that failed only from the impact.

4-27-76/St. Thomas/81 PAX/35F-17S-29M/N

After landing, the aircraft overran the runway, struck an ILS antenna, went through a chain link fence, struck an embankment, then came to rest next to a building. The fuselage broke into three major sections. One fracture occurred approximately between rows 9 and 10; the other occurred aft of row 17. Because of extensive fire damage, seat documentation was not possible. All nine passengers in the first class cabin perished. One was in an ejected seat at a fuselage break and received a skull fracture. The other eight passengers received no major traumatic injuries, but expired from smoke inhalation.

Forty-nine passengers in the middle section were in seats not affected by the fuselage breaks. The seven fatalities in this section were listed as: three trauma, three smoke inhalation and burns, and one smoke inhalation with trauma. Fifteen of the forty-two survivors sustained serious injuries which included one spinal fracture, fractured arms and legs, and various burns.

Sixteen passengers in the aft section sustained fatal injuries of unknown natures. Three passengers in this section survived, two with serious injuries. Four passengers were unaccounted for.

Several seats were reported to have broken loose, but their locations are not known. It is assumed that the forward and aft portions of the aircraft were nonsurvivable, and the four trauma-related fatalities in the center section could have been influenced by released seats.

Assessment of Passenger Injuries from Category 3 Accidents

Based on the assumptions made from the available information, a determination was made of the population of passengers who could have sustained fatal or serious injuries because their seats released. This "at risk" population is shown in table 11.

TABLE 11. POPULATION OF PASSENGERS FROM CATEGORY 3 ACCIDENTS WHOSE INJURIES COULD HAVE BEEN CAUSED BY SEAT FAILURE

Accident	Fatalities	Serious Injuries
St. Thomas (1970)	0	4
St. Thomas (1976)	4	0
Total	4	4

SUMMARY OF PASSENGER INJURIES FROM ACCIDENTS IN CATEGORIES 1, 2, AND 3

The total "at risk" population of passengers whose injuries could have been caused by their seats displacing forward or releasing in all the accidents studied is summarized in table 12.

TABLE 12. POPULATION OF PASSENGERS FROM ACCIDENTS IN CATEGORIES 1, 2 AND 3 WHOSE INJURIES COULD HAVE BEEN CAUSED BY SEAT FAILURE OR FORWARD DISPLACEMENT

	Fatalities	Serious Injuries
Category 1	14	12
Category 2	37 to 89	43 to 47
Category 3	4	4
Total	55 to 107	59 to 63

Accidents Not Containing Sufficient Information

There were accidents for which there was little or no information available to make appropriate assessments of seat performance. As stated earlier, the aircraft is often destroyed by fire, making an investigation of postcrash structural damage impossible. The following is a list of the accidents that were not studied due to insufficient information, but whose crash scenario and mixture of fatalities and injuries indicate that seat performance could have been a factor in passenger survival.

12-29-72/Miami/L1011/176 PAX and Crew/99F-60S-17M/N

The aircraft crashed in flat marshland which was covered by soft mud and about 1 ft of water. It broke into four main sections. There were 99 trauma fatalities, 63 trauma injuries, and fourteen burn injuries. The predominant cause of death was crushing injuries to the chest. Lower-extremity fractures were prevalent among the survivors. Other prevalent survivor injuries were rib fractures, spinal fractures, and pelvic fractures. Seat failures occurred from the legs bending and fracturing. Other seats failed at floor separation points, and many seats remained attached to the floor.

9-11-74/Charlotte, NC/DC-9/82 PAX and Crew/71F-10S-1M/N

On final approach, the aircraft struck ground in an open field. It then went through a wooded area, began to break up, and came to rest in a ravine. The fatalities were listed as: 32 trauma, 25 burns and smoke inhalation, 7 burns, 1 smoke inhalation, and 6 combination injuries. The ten serious injuries were caused by trauma and burns. In most cases, the passenger and crew seats failed. Most of the survivors were in the cabin section near the tail, which retained its structural integrity.

6-24-75/Jamaica, NY/727/124 PAX and Crew/112F-12S-0M/N

On final approach, the aircraft landed short, hit several approach lights, large boulders, and a 5 ft embankment. The fatalities were listed as: 87 trauma and 25 fire. Three survivors sustained trauma injuries and nine received burns and smoke inhalation injuries. All survivors were in the rear of the cabin. Seats were reported in reference 33 to have torn loose from the floor in all sections.

4-4-77/New Hope, GA/DC-9/85 PAX and Crew/62F-22S-1M/N

The aircraft attempted to land on a highway, struck utility poles, trees, and automobiles, and broke into five major pieces. Thirty-one occupants died from trauma injuries, nine from trauma and burns, and twenty from burns and smoke inhalation. The 23 survivors received trauma and/or burn injuries. Eight survivors were ejected from the aircraft in their seats. The two rearward-most cabin pieces, containing a total of seventy seats, had the majority of survivors.

10-31-79/Mexico City/DC-10/87 PAX and Crew/70F-17S-0M/N

While landing, the aircraft touched down, hit a vehicle, became airborne, hit again with one wing low, then collided with a building. A Western Airlines

accident investigator's account of the body identification described several deaths caused by blunt impact to the face or head. The same investigation noted that an on-site study revealed that seats had ripped loose from the floor rails.

DESCRIPTION OF AN IMPROVED TRANSPORT SEAT AND ESTIMATED ASSOCIATED COSTS

DESCRIPTION

A transport seat designed to meet new performance criteria would be based on high production volumes and marketing considerations. Therefore, the design process would strive to keep the seat simple in design, as inexpensive to the manufacture as possible, and the weight at a minimum.

It was beyond the scope of this report to devise such a seat in order to assess its impact on the airline industry for the cost/benefit study. Instead, the characteristics of a conceptual transport seat were defined based on the seat modifications created for the CID project. A conceptual seat was created which met the design criteria, yet could be manufactured with little weight and cost increase. This was not meant to be an absolute assessment. The seat modifications which define this seat were designed to prove the feasibility of a concept, not for production purposes. The conceptual seat is capable of surviving a triangular-shaped 18-G, 35-ft/sec forward input pulse, and an ultimate lateral static load of 9 G.

The standard seat which was the basis for the modification is shown beside the conceptual seat in figure 23. Top and front views of both seats are in figure 24. It was assumed that retrofitting the standard seat with the following crashworthy features might prevent the fatalities and serious injuries identified in the previous section:

1. Placing improved track fittings on the four floor-track attach points.

2. Replacing the rear legs with energy absorbers containing attachment points which allow motion relative to the seat pan.

3. Reinforcing the seat pan attach fittings.

4. Reinforcing the diagonal leg struts.

5. Using lateral bracing straps beneath the seat pan structure and between the front legs.

6. Reinforcing the seat pan tubes at the four leg attach points by adding internal sleeves.

It is noted that in order for the conceptual seat to survive the 18-G, 35-ft/sec pulse and limit the floor track loads to 9G, six inches of forward stroking motion is necessary. As previously mentioned, this could adversely affect the passenger by reducing the "strike" envelope. However, since preliminary tests indicate the strength capability of floor track is above 9 G (see "Discussions and Recommendations" section), the six inches of stroke could be shortened. Additionally, the final design criterion as determined by the FAA, could be less than 18-G, 35-ft/sec.

DEVELOPMENT COSTS

The costs associated with developing and certifying a seat that has performance capabilities similar to the conceptual seat were based on experience obtained from similar work performed for crashworthy military helicopter seats. The costs shown in table 13 are based on a three-passenger seat, on the assumption that two dynamic test criteria are used for certification (three seats per test), and that the current seat market for U.S. carriers is shared by three manufacturers.

TABLE 13. DEVELOPMENT COSTS FOR A TRANSPORT SEAT TO MEET NEW PERFORMANCE CRITERIA

Engineering- 4000 hours @ $60 per hour	$ 240,000
Technical Support- 2000 hours @ $50 per hour	100,000
Prototype Construction- 6 seats @ $5000 per seat	30,000
Testing- 6 tests @ $6000 per test	36,000
Total Cost for One Manufacturer	$ 406,000
Total Cost for Three Manufacturers	$1,218,000

FUEL COSTS

In order to assess the impact of increased seat weight on airline operating costs, it was necessary to study aircraft operating expenses from the Form 41 schedules submitted to the Civil Aeronautics Board by U.S. certified air carriers. The data studied was confined to major and national carriers, and aircraft with seat capacities greater than 50 and certified under FAR Part 25.

An analysis was performed on each type of aircraft to determine the additional fuel costs for adding one pound to each passenger seat. Appendix B is a description of this analysis and the results are shown in table 14. Although the average fuel price for 1985 is expected to be 79 cents per gallon, the costs in table 14 are based on an estimated average price of 90 cents per gallon for the next ten years. The additional fuel cost for the 1985 fleet would then be 8 million dollars.

The fuel cost calculations could also be influenced by how the various configurations of seat sets used on an aircraft, i.e. two, three, and five-passenger seats, are affected by a weight increase resulting from a new design.

TABLE 14. ADDITIONAL ANNUAL FUEL COST FOR ADDING ONE POUND OF WEIGHT TO EACH PASSENGER SEAT FOR THE 1985 U.S. FLEET (BASED ON FUEL PRICE OF $.90/GAL)

Aircraft	Number In Fleet	Average No. of Seats	Fuel Costs Increase Per Year For All A/C (In Thousands)
DC-8	77	199	157
DC-9	422	102	1,156
DC-10	144	268	586
MD-80	120	148	377
727-200	769	148	2,577
727-100/C	211	119	545
737	332	111	938
747	120	362	816
757	24	185	86
767	54	199	167
L-1011	99	288	464
L-1011-500	15	236	54
A300B	38	254	168
BAC111-200	25	78	41
Total Fuel Cost			$8,065,000

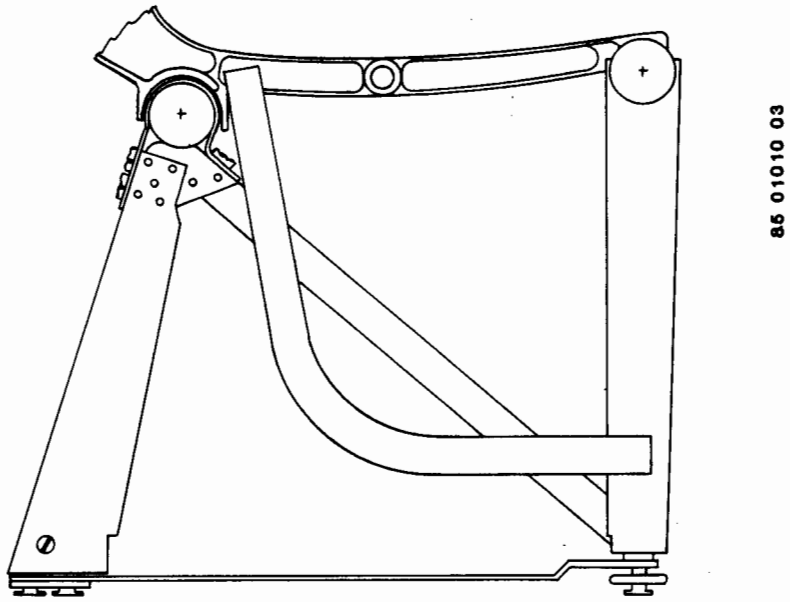

STANDARD SEAT

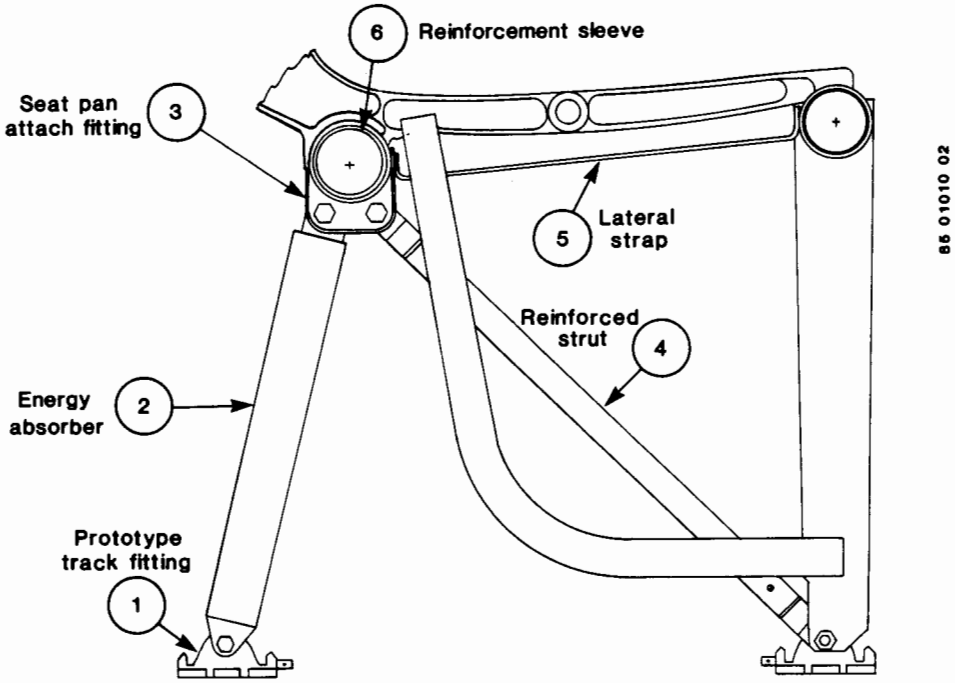

CONCEPTUAL SEAT

Figure 23. Illustration of standard and conceptual seats.

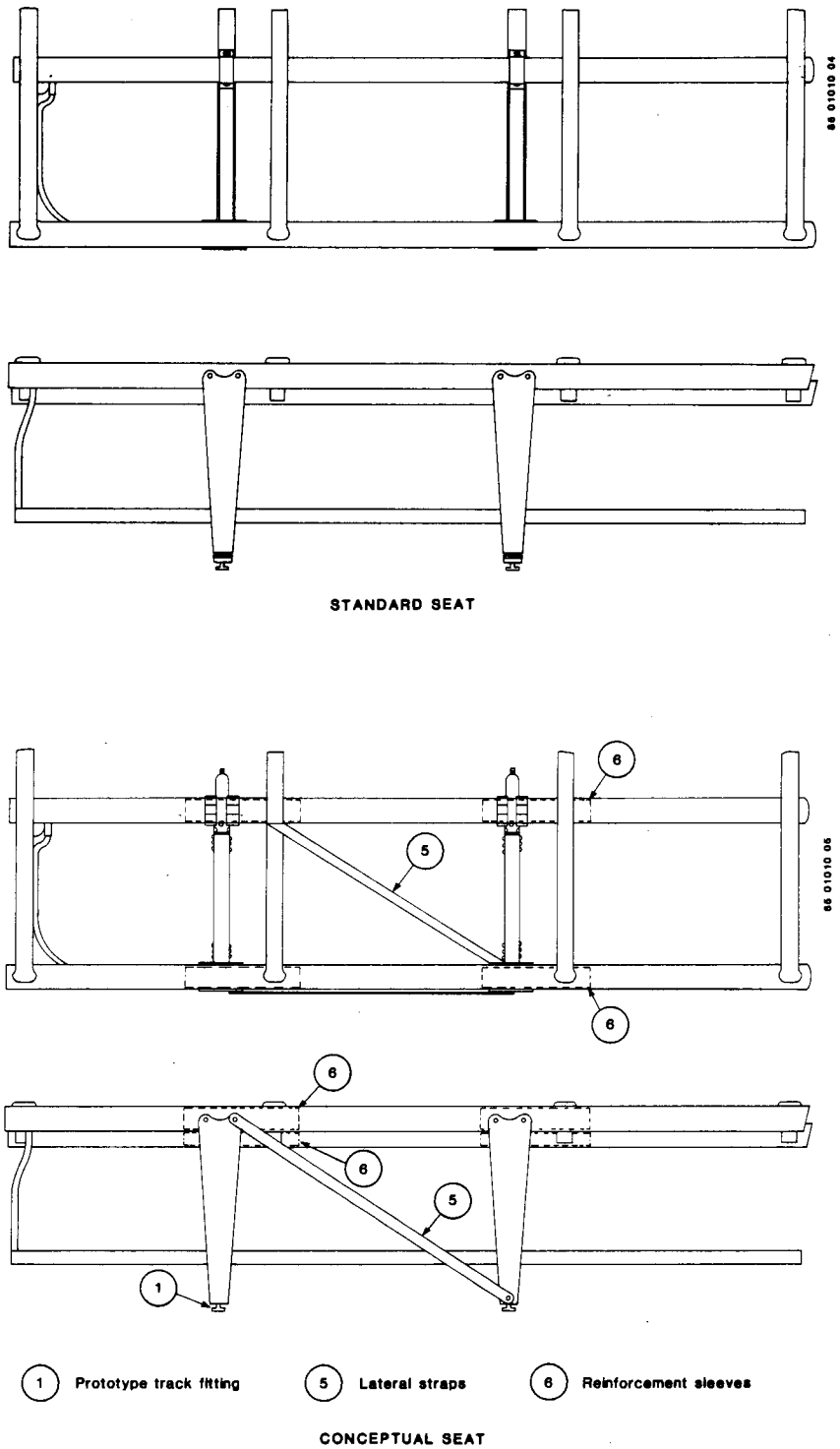

Figure 24. Top and front views of standard and conceptual seats.

COSTS OF A HUMAN LIFE AND A SERIOUS INJURY

Determining the benefits associated with changing a product, such that it saves lives or reduces injuries, can be elusive if societal losses or humanitarian considerations are used as decision factors. This is evidenced by the differing values of a human life in table 15. These values are used by Government agencies in assessing the economic benefits of proposed regulations that could reduce the risk of an accidental death (reference 36). Clearly, the higher the value used, the greater chance a regulation has for adoption.

When assessing the benefits of a proposed regulation to the aviation system in terms of the value of lives saved, the costs to the airline industry when a passenger is killed or injured should be considered. Since it was decided to perform the cost/benefit study relative to the airline industry, only the costs borne by the industry due to loss of life or injury would be considered. Any losses experienced by family or society and not compensated by the airline industry would be excluded. The costs of fatalities are the dollar amounts recovered by survivors of victims in terms of jury verdicts, judgements, or settlements. The costs of injuries are dependent on their severity, their long-term effects on the passenger, and whether or not they lead to litigation.

TABLE 15. VALUES OF A HUMAN LIFE USED BY VARIOUS AGENCIES

Agency	Value ($)
Occupational Safety and Health Administration	3,500,000
White House Office of Management and Budget	1,000,000
Environmental Protection Agency	400,000 - 7,000,000
Federal Aviation Administration (1984 value)	650,000

COST OF A HUMAN LIFE

Several organizations were contacted to obtain information about cash recoveries from commercial aircraft accident fatalities. These included the Air Transport Association, Association of Aviation Underwriters, United States Aviation Insurance Group, Association of Trial Lawyers of America (ATLA), the

litigation division of the FAA, and several attorneys who specialize in aviation tort cases. Little or no information was provided by those organizations directly involved with aviation. Recovery dollar amounts from some cases were provided by attorneys, but settlements are sometimes sealed, making the cash amounts involved proprietary.

A majority of the information was found in the Law Reporter, published by the ATLA. This is a monthly publication listing the dollar amounts recovered from verdicts, judgements or settlements from various tort cases including airline accidents. The size of a published recovery can sometimes be larger than the final amount if the decision is appealed. However, by disregarding recoveries that appeared exaggerated, it was possible to obtain a sample of recovery amounts that were consistent among groups of individuals.

The recovery data from the Law Reporter and additional data provided by attorneys were collected, then divided among three groups of passengers: married males, unmarried males, and females. The results are shown in tables 16, 17, and 18.

In order to apply these data to the population of passengers and determine an average recovery amount from a fatality, it was necessary to obtain a profile of the passenger population. This was provided by a survey of airline passengers between 1981 and 1983 (reference 37) and another 1983 survey (reference 38). The results from these surveys are summarized in table 19. This table compares favorably with past surveys profiling the typical air traveler as a 41-year-old male with three dependents, and a 1982 median annual income of $40,300 (reference 39). (It also compares closely with the average age of the fatalities listed in tables 16 through 18.)

By combining the recovery amounts in tables 16 through 18 with the survey data in table 19, a calculation can be made of the average recovery amount for a fatality in a commercial aircraft accident. As shown in table 20, the amount is approximately $580,000.

Several items should be noted about the recovery data presented in the three tables. Data collected for the tables spanned accidents occurring between 1969 and 1982. The most recent accident was the Air Florida crash in January 1982. Although the passenger's age for each recovery amount from that accident was not available, the average age of all the fatalities, as provided by the NTSB, was 42 years.

The annual income of females who were fatally injured is not shown because it was often unavailable and also did not appear to influence the amount of the recovery.

It was not evident that recovery amounts increased over the years in which these data were collected. However, considering the size of the sample compared with the few thousand fatalities which occurred during these years, such an observation is only speculative. Ideally, it would be desirable to account for all fatalities and associated compensation legal fees for this study.

TABLE 16. RECOVERY AMOUNTS FROM MARRIED MALE FATALITIES

Age	Annual Income ($)	Dependents	Amount (Thousands of $)
50	100,000	3	1,270
61	40,000	3	776
48	36,000	2	750
42	25,000	5	700
51	42,000	5	1,200
51	46,000	4	1,230
41	35,000	5	1,215
48	33,500	1	475
47	17,000	3	175
53	18,000	3	230
35	29,000	1	250
36	25,000	4	800
48	39,500	1	440
42	33,000	4	665
38	17,000	3	574
38	27,000	3	830
26	30,000	1	830
48	28,000	3	588
60	24,000	1	800
48	58,000	5	752
43	52,000	3	725
40	42,000	4	825
30	23,000	1	750
Unknown	Unknown	1	725
Unknown	Unknown	1	620
Unknown	Unknown	1	500
Unknown	Unknown	4	850
Unknown	Unknown	1	875
Unknown	Unknown	3	1,100
Unknown	Unknown	3	1,100
Unknown	Unknown	3	1,000
Unknown	Unknown	3	920
Unknown	Unknown	3	800
Unknown	Unknown	3	1,200
Unknown	Unknown	2	650
Average of Known Figures			
44	35,400	3	777,000

TABLE 17. RECOVERY AMOUNTS FROM UNMARRIED MALE FATALITIES

Age	Annual Income ($)	Amount (Thousands of $)
32	32,000	775
47	60,000	1,240
55	60,000	750
35	30,000	500
30	10,000	750
29	30,000	150
44	36,000	150
56	36,000	750
53	34,200	675
55	15,000	200
30	24,700	278
56	34,000	340
36	25,000	785
Unknown	Unknown	160
Unknown	Unknown	275
Average of Known Figures		
43	32,800	519,000

TABLE 18. RECOVERY AMOUNTS FROM FEMALE FATALITIES

Age	Survivors	Amount (Thousands of $)
31	0	550
36	0	275
29	4	570
42	5	375
51	3	250
53	1	300
56	3	275
34	3	500
24	1	416
42	5	300
Unknown	2	400
Unknown	1	250
Unknown	1	400
Unknown	1	350
Average of Known Figures		
40	2	370,000

TABLE 19. SUMMARY OF RESULTS FROM PASSENGER SURVEYS BETWEEN 1981 AND 1983

Sex	Percent
Male	60
Female	40
Marital Status	
Married	78
Single	22
Age	
under 18	10
18 - 24	10
25 - 34	33
35 - 44	22
45 - 54	15
55 - 64	12
65 +	8

Median Age: 42.5

Income ($)	
under - 10,000	4
10,000 - 19,999	13
20,000 - 29,999	15
30,000 - 34,999	20
35,000 - 39,999	7
40,000 - 49,999	19
50,000 - 74,999	12
75,000 - 99,999	6
100,000 +	3

Median Income: $40,000

TABLE 20. CALCULATION OF THE AVERAGE RECOVERY AMOUNT FOR COMMERCIAL AIRCRAFT ACCIDENT FATALITIES

60% male X	78% married	X	$777,000 recovery =	$363,640
60% male X	22% single	X	519,000 recovery =	68,000
40% female		X	370,000 recovery =	148,000
			Average Recovery	$580,140

COST OF A SERIOUS INJURY

The majority of information concerning the cost of a serious injury was supplied by the Air Transport Association. During their testimony before the U.S. Senate in 1983, concerning proposed changes to compensatory settlements under the Warsaw Convention, the ATA presented a summary of passenger injury settlements from U.S. Airline accidents (table 21). The breakdown between serious and minor injuries in the settlements is not known. If all the settlement amounts are totaled, then averaged, the amount is $81,400. Although the values seem to vary widely, they appear to be influenced by the severity of the accident. For example, there was no structural breakup of the aircraft in the Los Angeles or Portland accidents.

TABLE 21. SUMMARY OF INJURY SETTLEMENTS FROM U.S. AIRLINE ACCIDENTS

Accidents	Number of Settlements	Average Amount ($)	Injuries (F-S-M/N)
March 1977 - Tenerife	53	145,000*	326-34-36
April 1977 - New Hope	4	389,000	62-22-1
March 1978 - Los Angeles	53	33,100	2-31-54
October 1978 - Portland	86	5,800	10-23-50
October 1979 - Mexico City	13	425,000*	72-13-2

*Passengers under the Warsaw Convention.

RESULTS OF COST/BENEFIT STUDY

In order to compare costs and benefits associated with an improved seat, the costs of changing the seats in the 1985 U.S. Fleet are compared with the prospective benefits resulting from the change. Prior to the comparison of costs and benefits, the following assumptions were made:

- There would be no additional installation costs due to the improved seats. Airline operators periodically change interiors for maintenance or cleaning. Thus, a phase-in period would be allowed, so as not to create an undue burden. However, for simplicity, this study assumes the entire aquisition cost is borne immediately.

- Typically, the average life of a transport seat is ten years. The costs and benefits are discounted over this period at a ten percent rate, which results in a discount factor of 6.144.

- The fuel costs are based on the usage of the 1985 fleet. As more aircraft are added, fuel consumption would increase. However, there would also be a proportionate increase in passenger enplanements, and consequently, an increase in the exposure of passengers to accidents.

It is recognized that a rule change affecting seat design requirements might not be retroactive. Thus, it would apply only to seats installed in new models of aircraft and it would be many years before the entire U.S. Fleet had improved seats. However, the above assumption concerning the phase-in period was made in order to assess the 1985 Fleet for the cost/benefit study.

COSTS

The industry costs associated with an improved transport seat would include the development cost, the initial acquisition cost, and the added operating costs (if any). The additional operating cost would be due to added weight, which would appear as an added fuel cost. Because the increments of added weight and acquisition cost are so dependent upon the particular seat design, they are treated as variables in the following development of costs. The study defines the range of these variables for which favorable cost/benefit ratios would result.

Based on the fleet size and average number of seats per aircraft (shown in table 14), a total of 392,772 seats would be subject to improvement at a cost of $X per seat. Since the phase-in period is not considered, the seat cost is based on a present value. This results in the following cost for the 1985 fleet.

ADDITIONAL SEAT COST: 392,772 seats x $X per seat = $392,772X

Associated development costs for the improved seat as outlined in table 13 are $1,218,000.

DEVELOPMENT COST: $1,218,000

The increased fuel costs (table 14) resulting from the additional weight of Y lb per seat bottom would be discounted over the life of a seat and result in the following present value.

FUEL COST: $8,065,000 per lb x Y lb x 6.144 = $49,551,360Y

Summing these costs results in the following total:

TOTAL COSTS: $392,772X + $1,218,000 + $49,551,360Y

Where X = added seat cost in $ and Y = added seat weight in lb.

BENEFITS

Accidents occurring between the years of 1970 and 1983 were studied to determine possible benefits from an improved seat. As shown in the accident study section of this report, it was established that between 55 to 107 fatalities and 59 to 63 serious injuries had the potential of being avoided through the use of an improved seat.

During the fourteen-year period between 1970 and 1983, there were 3,342.6 million passenger enplanements on U.S. air carriers (reference 40). Applying the prospective benefits of preventing 107 fatalities and 63 serious injuries to the total enplanements results in the following casualty rates:

$$\frac{107 \text{ fatalities}}{3{,}342.6 \text{ million PAX}} = 0.0320 \text{ fatalities/million PAX}$$

$$\frac{63 \text{ serious injuries}}{3{,}342.6 \text{ million PAX}} = 0.0188 \text{ serious injuries/million PAX}$$

It is estimated that there will be approximately 347.8 million enplanements in 1985. Therefore, the casualty rate applied to the 1985 fleet for an annual amount of fatalities and serious injuries avoided is:

0.0320 fatalities/million PAX x 347.8 million PAX/year = 11 fatalities/year.

0.0188 serious injuries/million PAX x 347.8 million PAX/year = 7 serious injuries/year.

Using the values of $580,000 and $81,000 for a fatality and serious injury, respectively, as determined in the section entitled "Cost of a Human Life and a Serious Injury," and combining these with the expected reduction in fatalities and serious injuries, then discounting them over the life of a seat, results in the following amounts:

11 fatalities/year x $580,000/fatality x 6.144 = $39,198,720

7 serious injuries/year x $81,000/serious injury x 6.144 = $3,483,648

Assuming that 100 percent of the fatalities and serious injuries identified in this study could have been prevented by an improved seat, the resultant benefit would be $42.68 million. Similarly, when applied to 55 fatalities and 59 serious injuries, the resultant benefit would be $23.45 million.

COSTS VERSUS BENEFITS

The potential benefit range of $23.45 to $42.68 million is now compared to the costs in order to determine the ranges of additional seat weight per bottom and seat cost which will equate the costs to the benefits. The resulting equation,

$$\$392,772X + \$1,218,000 + \$49,551,360Y = \$42,682,368 \text{ (or } \$23,448,435)$$

results in the cost/benefit band shown in figure 25.

The region below the band represents a favorable cost/benefit ratio and the region above the band represents an unfavorable ratio. The merit, on a cost basis, of any seat design which provides the required crash protection can be quickly evaluated by plotting the increments of added cost and weight associated with the design.

It is believed that the air transport industry could design, manufacture, and operate transport seats that would fall within or below the band in figure 25. The results of the CID seat experiments appear to verify this.

Some of the experimental configurations which met the peformance requirements defined in the section "CID Seat Experiments," added only 0.6 lb per seat bottom to the design. Even this weight does not exceed the maximum added weight criteria of figure 25. Moreover, the CID test hardware was prototype hardware made in a short time without benefit of tooling. It is expected that a production seat with the same crash-protection capability could be designed with little or no weight penalty.

Preliminary cost projections were made, based on hardware from the CID experiments. Assuming quantities of 100 seats, and based on actual quotations for material and fabrication, it was found that the new parts required to modify the seat (less the cost of existing parts which were removed) cost less than $100, including assembly. These costs were also based on prototype drawings. Cost reductions would be expected in a production design. Therefore, it would not be difficult to design improved seats with less than the maximum $100 cost increment shown in figure 25.

The band in figure 25 is based on the assumption, among others, that all of the identified fatalities and serious injuries which occurred coincident with a seat failure, would have been prevented by an improved seat. In reality, the improved seats would not be 100-percent efficient in preventing these deaths and injuries. This effect would shift the band to the left and reduce the region of favorable cost/benefit ratios. However, one should consider the fact that the values used for a life and serious injury, $580,000 and $81,000, are conservative in comparison to the values in table 15. It is apparent that using these values or adding in associated legal fees would shift the band to the right.

It is equally apparent that available accident records do not identify all seat-related injuries. A correction for this lack of data would shift the band to the right, and probably more than compensate for the error associated with other than 100-percent effectiveness. Table 22 lists five crashes which are not included in the study because of a lack of data. These crashes are

TABLE 22. ACCIDENTS WITH INSUFFICIENT INFORMATION IN WHICH SEAT PERFORMANCE COULD HAVE BEEN A SURVIVAL FACTOR

	A/C	PAX and Crew	Injuries (F-S-M/N)
12-29-72 Miami	L1011	176	99-60-17
9-11-74 Charlotte	DC-9	82	71-10-1
6-24-75 Jamaica, NY	727	124	112-12-0
4-4-77 New Hope	DC-9	85	62-22-1
10-31-79 Mexico City	DC-10	87	70-17-0
Total			414-121-19

more severe than those used in the study, as evidenced by the crash scenarios and the number of injuries and fatalities. However, it is likely that improved seating could have allowed at least some reduction in injury in these severe but survivable crashes. If only a small percentage of the injuries sustained in these crashes were prevented, the unity cost/benefit ratio band would be shifted to the right, and the design of an economically-feasible, improved seat would probably become easy to achieve.

If the accident investigation records were entirely complete, other preventable injuries would probably move this band even further to the right. Wherever a single true cost/benefit curve may lie, the band based on the only available injury data from the 15 accidents shows that development of a cost-effective design appears feasible.

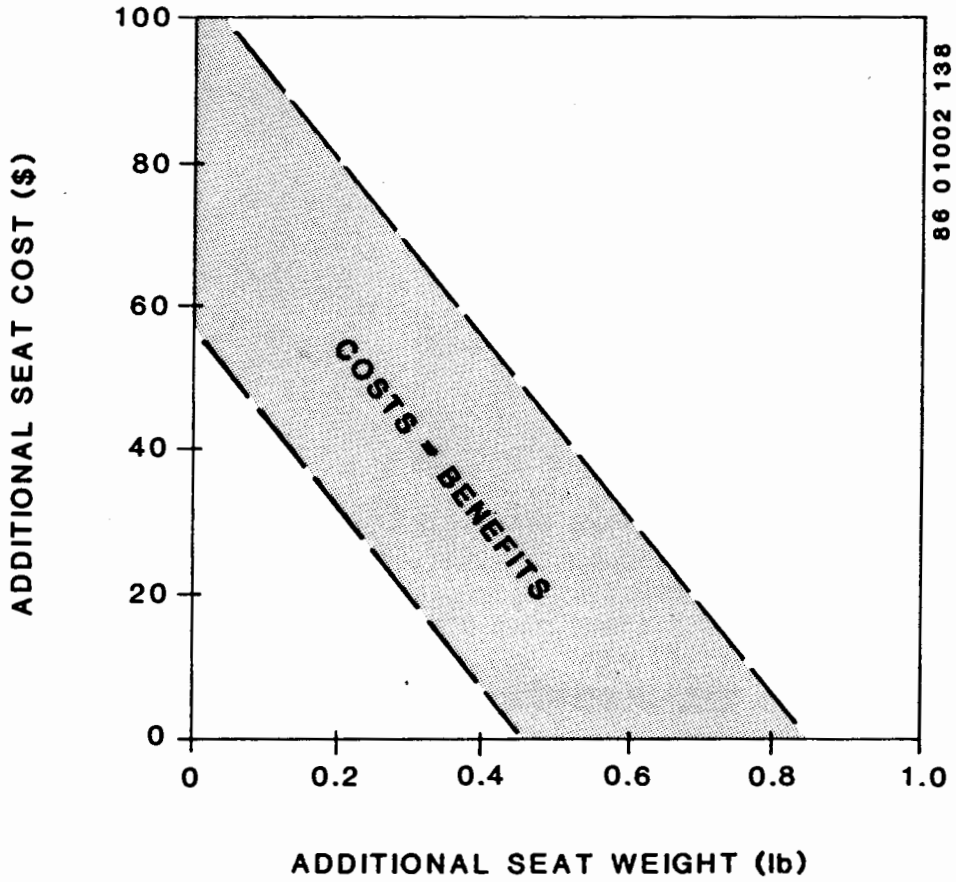

Figure 25. Cost/benefit band based on 55 to 107 fatalities and 59 to 63 serious injuries.

DISCUSSIONS AND RECOMMENDATIONS

According to the literature surveyed for this report, most airlines required seats to be tested to ultimate static loads of 12 G prior to 1967. Even seats built in the early 1970's sustained static test loads up to 11 G. Since the life of a transport seat is at least ten years, it is expected that some, if not most of the crashes in this study that occurred up to 1977, involved seats built to the 12-G requirement. It is also possible that some of the crashes involved energy-absorbing seats, which reduced the number of serious injuries and fatalities.

Considering that current seats are designed to ultimate loads closer to the 9-G requirement, the data collected for the pre-1977 accidents are probably biased. If those accidents had involved seats built to today's specifications, the incidence of fatalities and serious injuries would probably have been higher. It is expected that as better data are collected in future accidents, and the mix of seats moves towards lighter ones with less ultimate strength and less deformation capability, the frequency of fatalities and serious injuries in severe survivable accidents will show an upward trend. This is also contigent on the continuing work to reduce fire fatalities. As this effort succeeds, and the number of fire fatalities decreases, the extent to which seat performance affects passenger survival will become more apparent.

Although the cost/benefit study was based on relating injuries to seat performance, it is noted that seats were often damaged without the passengers receiving serious injuries. Accidents which had reported seat failures, but which were not considered in the study because none of the injuries could be related to seat failure, are listed in table 23.

It was observed that most of the serious injuries tabulated in the study were caused by flailing, or from the passenger being released and striking some object. Under severe decelerative conditions, it would be expected that the passenger would first load into the lap belt (while jackknifing over it) and receive some sort of abdominal injury, then impact or flail into adjacent structures as the seat fails. There were incidents of abdominal contusions, but not one occurrence of an internal abdominal injury was found in the accident records. These observations suggest the existence of two conditions pertaining to transport seats. First, seats are not strong enough to permit lap belt injuries. They typically fail in some manner below the level of human tolerance. Secondly, close seat spacing and the lack of an upper torso restraint allow passengers to receive flailing injuries without their seats failing.

It was also observed that there was a distinct difference in the location of spinal injuries between the Category 1 and Category 2 accidents. Table 24 shows the number of occurrences and location of spinal injuries between the two categories. A majority of the spinal injuries in the Category 1 accidents occurred in the upper portion of the spine; whereas spinal injuries in Category 2 occurred in the lower portion of the spine. As previously discussed, the aircraft in the Category 2 accidents experienced higher longitudinal accelerations than the Category 1 aircraft. Consequently, it was found that most of the spinal injuries in the Category 2 accidents occurred in the

TABLE 23. ACCIDENTS WITH REPORTED SEAT FAILURES, BUT WITHOUT SEAT RELATED INJURIES

	A/C	Injuries (F-S-M/N)
7/19/70 Philadelphia	737	0-1-60
9/8/70 Louisville	DC-9	0-0-94
7/30/71 San Francisco	747	0-10-208
12/20/72 Chicago	DC-9	10-9-26
10/28/73 Greensboro	737	0-0-96
3/31/75 Casper	737	0-1-98
11/12/75 Raleigh	727	0-1-138
12/16/75 Anchorage	747	0-2-119
7/9/78 Rochester	BAC111	0-1-76

lumbar region of the spine. According to reference 41, spinal fractures caused by using only a lap belt in a longitudinal decelerative environment are common in the lumbar region, and do not occur when an upper torso restraint is used. This appears to invalidate the assumption stated in the literature that most spinal injuries in transport accidents are caused by vertical accelerations loading the spine into the seat.

As pointed out, there were other accidents that could have been included in the estimate of benefits, but were not, due to their lack of sufficient documentation. Thus, specific information needs to be gathered in future accidents so an improved evaluation can be made of the actual relationship between seat performance and injuries. It is recommended that the accident investigation effort in future crashes focus not only on the cause, but on the effect seat performance may have had on passengers' injuries. This would entail modifying or adding to the investigation procedure. To facilitate this effort, a checklist, in the form of a worksheet, could be standardized for injury data and seat performance data, and be assigned to each passenger and seat, respectively. The investigators could then tabulate the worksheets and present the results in a format similar to the injury/seat performance data compiled for the accidents studied in this report. Eventually, proper documentation would allow an assessment to be made of the changes in seat design which would economically benefit the airline industry and the passengers' well being. The frequent incidence of spinal fractures from the accident study suggests that thorough documentation in future accidents might justify the use of shoulder harnesses.

TABLE 24. OCCURRENCE AND LOCATION OF SPINAL INJURIES IN CATEGORY 1 AND 2 ACCIDENTS

Injuries in Category 1	Location in Spine	Injuries in Category 2
3	C3	
1	C5	
4	C6	
1	C7	1
1	T4	
1	T5	
3	T6	
1	T7	
	T10	2
	T11	2
2	T12	3
1	L1	8
	L2	7
	L3	5
2	L4	3
2	L5	

Note: Some passengers received multiple spinal injuries.

It has become obvious from the work performed by the FAA (Appendix A) and the testing and development of the CID seats that dynamic testing and floor deformation criteria should be required for existing transport seats. The failures of standard seats when subjected to a 9-G dynamic pulse especially show this to be true. Such criteria do not necessarily result in inordinate increases in weight or cost. The CID seat experiments showed that the weight increase can be expected to be less than 0.6 lb per seat bottom.

If load-limiting were not used, the dynamic test criteria of transport seats would be limited by the ability of the aircraft floor structure to sustain the loads imparted to it by the seat legs. Generally, the strength capabilities of an aircraft floor are not uniform along the length of the fuselage. The dynamic testing requirements for seats used aboard a particular aircraft would then be limited by the weakest point in the aircraft's floor.

Since the same dynamic test requirement would need to apply to all seats in all aircraft, that requirement, as expected, would depend on the aircraft floor structure that has the least strength. Even though seats are currently certified under static loading conditions, it is assumed that aircraft manufacturers design all seat attachment locations to at least sustain the loads created by a dynamic condition above the minimum requirements, in order to ensure the integrity of the floor during a crash. If new dynamic test criteria surpassed this condition and caused the reaction loads in the seat legs to exceed the floor capability, load-limiting in the seat structure could provide a less expensive alternative than strengthening the floors in existing aircraft. Such an option would make it feasible to design seats to an 18-G, 35-ft/sec triangular pulse criterion, as was demonstrated by the CID seat experiments.

Currently, the actual ultimate strength capability of an aircraft floor is not known. However, there was work performed during the CID development program that allowed estimates to be made of floor strength. This work is described in the previously mentioned report DOT/FAA/CT-84/10 (reference 1). In essence, the results from standard track fitting tests at Simula, test reports from various fitting manufacturers, and maximum allowable floor track loads from Boeing documents were combined to develop maximum load capacities which can be anticipated from a double-studded track fitting (figure 12). They are as follows:

Vertical	8,000 lb
Longitudinal	9,000 lb
Lateral	5,500 lb

While the fitting may remain attached to the track under an 8,000-lb vertical load, it is not known if the underfloor structure will sustain this load.

If the above loads are representative of the maximum strength capabilities of aircraft floor, then computer simulation programs developed by the FAA can show what dynamic pulse will cause a transport seat to impart these loads into the floor. Dynamic test criteria can then be developed which will cause the reaction loads in the seat legs to match the floor capability, and thus achieve a balanced design of the floor-seat system.

If the above loads are not typical of maximum floor capabilities, then it is recommended that future research be conducted to determine what they actually are. Obtaining this information would facilitate the selection of optimum design criteria for transport seats.

In summary, the modifications made to the experimental CID seats were very successful in development tests. The design concepts demonstrated many ways in which the crashworthiness of transport seats could be improved. Based on available crash data, it was demonstrated that seats using some of these concepts could be cost effective for the airline industry. The money spent to develop, produce, and use seats with these changes could be recovered by eliminating settlement costs from deaths and serious injuries.

REFERENCES

1. Cannon, M. R., and Zimmermann, R. E., Seat Experiments for the Full-Scale Transport Aircraft Controlled Impact Demonstration, DOT/FAA/CT-84/10, Federal Aviation Administration Technical Center, Atlantic City, New Jersey, March 1985.

2. Cannon, M. R., and Zimmermann, R. E., Seat Experiment Results - Full-Scale Transport Aircraft Controlled Impact Demonstration, DOT/FAA/CT-85/25, Federal Aviation Administration Technical Center, Atlantic City Airport, New Jersey, December 1985.

3. Dodd, M. J., "Aircraft Passenger Seat Construction," paper presented at the Conference on the Development of Fire-Resistant Aircraft Passenger Seats, August 1976.

4. Aviation Week and Space Technology, "Good Seat Engineering Saves Lives," November 24, 1952.

5. Aviation Week and Space Technology, "Nonsked Tries Rear-Facing Seats," June 8, 1953.

6. Aviation Week and Space Technology, "NACA Tests Promise Safer Seat Design," July 26, 1954.

7. Aviation Week and Space Technology, "Rearward Seating Urged for Airline Use," January 16, 1956.

8. Aviation Week and Space Technology, "USAF Reports Rearward Seating Safer," February 11, 1957.

9. Pesman, G. J., et al., NACA Conference on Airplane Crash-Impact Loads, Crash Injuries and Principles of Seat Design for Crashworthiness, Lewis Flight Propulsion Laboratory, Cleveland, Ohio, April 17, 1956.

10. Hasbrook, H., Design of Passenger "Tie-Down", Some Factors for Consideration in the Crash-Survival of Passenger Seats in Transport Aircraft, Aviation Crash Injury Research of Cornell University, Flushing, N.Y. September, 1956.

11. Preston, G. M. and Pesman, G. J., Accelerations in Transport-Airplane Crashes, Lewis Flight Propulsion Laboratory, Cleveland, Ohio, February 1958.

12. American Aviation, "Designing Aircraft Seats to Save Lives," July 28, 1958.

13. Space and Aeronautics, "Energy Absorption Applied to Seat Design," October 1958.

14. Aerotec Industries Review, "Passenger Safety," Volume II, Number 3, Winter 1961-62, Aerotec Industries, Inc., South Norwalk, Connecticut.

15. Aerotec Industries Review, "Passenger Seats - MATS C135 Aircraft," Ibid.

16. Federal Aviation Administration Congressional Hearing Synopsis No. 9660, In the Matter of: Transport Category Airplanes, Seat and Seat Restraint Strength, pp. 648-649, Washington, D.C., June 3-5 and September 10, 1980.

17. Aviaton Week and Space Technology, "Lightweight Seat Evaluated by Airlines," December 25, 1961.

18. Cress, G., Double and Triple Coach Seat Static and Dynamic Tests Weber Part Nos. 804001-602, 804003-604, 804003-605, Weber Aircraft Corporation; Engineering Report TR-218, Trans World Airlines, Inc., April 3, 1962.

19. Cress, G., Eastern Airlines 720/727 Two and Three Passenger Seat Static and Dynamic Tests, Weber Aircraft Corporation; Engineering Report TR-215, April 3, 1962.

20. Cress, G., Electra Passenger Seat 210386, Weber Aircraft Corporation; Engineering Report TR-216, June 5, 1961.

21. Carmody, J. K., Dynamic Testing of the Ask Type Ib and Type II Aft Facing Passenger Seats Weber P/N 804392 Double (Type Ib) Weber P/N 804391 Triple (Type IIb), Weber Aircraft Corporation; United States Air Force Aeronautical Systems Division, Wright-Patterson Air Force Base, Ohio, January 1962.

22. Aviation Week and Space Technology, "Tri-Axial Airline Seat Limits Acceleration," July 24, 1961.

23. Robillard, R.J., SST Seat Investigation, Lockheed Aircraft Corporation, Burbank, CA, April 7, 1965.

24. Aviation Week and Space Technology, "Seat Makers Emphasize Reduced Weight," December 18, 1967.

25. Haley, J. L., Turnbow, J. W., and Walhout, G. J., Floor Accelerations and Passenger Injuries in Transport Aircraft Accidents, USAAVLABS Technical Report 67-16, U.S. Army Aviation Materiel Laboratories, Fort Eustis, VA, May 1967.

26. Aviation Week and Space Technology, "Seat Manufacturers Stressing Reductions in Weight of Units," July 27, 1981.

27. Martindale, D., "Rethinking the Airline Seat," Frequent Flyer, September 1982.

28. Goold, I., "Seats: The Passenger/Airline Interface," Flight International, September 15, 1979.

29. Laananen, D. H., Whole-Body Human Tolerance to Impact With Lap Belt-Only Restraint, Report Number TI-83405, Simula Inc., Tempe, Arizona; Department of Transportation, Federal Aviation Administration Technical Center, Atlantic City, New Jersey, May 1983.

30. Horsfall, J., "Cabin Design for Survival," Department of Geodes and Geophysics, Cambridge University; Flight International, June 29, 1980, pp. 1493-1494.

31. Swearingen, J. J., et al., "Kinematic Behavior of the Human Body During Deceleration," Civil Aeromedical Research Institute, Federal Aviation Agency, Oklahoma City, Oklahoma; Aerospace Medicine, February 1962, pp. 188-197.

32. Widmayer, E., and Brende, O. B., Commercial Jet Transport Crashworthiness, NASA CR-165849, (DOT/FAA/CT-82/86), NASA Langley Research Center, Hampton, Virginia, 1982.

33. Wittlin, G., Gamon, M., and Skycoff, D., Transport Aircraft Crash Dynamics, NASA CR-165851, (DOT/FAA/Ct-82/69), NASA Langley Research Center, Hampton, Virginia, March 1982.

34. Cominsky, A., et al., Study of Aircraft Crashworthiness for Fire Protection, NASA CR-166159, NASA Ames Research Center, Moffett Field, California, January 1981.

35. Chandler, R. F., et al., Crash Injury Protection in Survivable Air Transport Accidents - U.S. Civil Aircraft Experience from 1970 to 1978, DOT/FAA/CT-82-118, Federal Aviation Administration Technical Center, Atlantic City Airport, New Jersey, March 1983.

36. Keller B., "The Human Factor," New York Times, October, 1984.

37. U.S. Department of Commerce, Bureau of the Census, Census of Transportation, 1981, 1982, and 1983 surveys.

38. Mendelsohn Media Research, Passenger surveys from in-flight magazines, 1983.

39. Keech, W.L., Economic Values for Evaluation of Federal Aviation Administration Investment and Regulatory Programs, FAA-APO-81-3, Office of Aviation Policy and Plans, Federal Aviation Administration, September 1981.

40. Federal Aviation Administration Regulatory Analysis Branch, Floor Proximity Lighting, Final Regulatory Flexibility Analysis, Draft Report, September 1984.

41. Nahum, N., and Melvin, J., The Biomechanics of Trauma, Prentice-Hall Inc., East Norwalk, Connecticut, 1985.

APPENDIX A

STATIC VERSUS DYNAMIC TESTING

Presently, seat manufacturers, in certifying their seats to FAA specifications, replicate 9 G forward decelerative conditions by placing body blocks, built to NAS-809 specified dimensions, in each seat position and slowly pulling on them up to a preselected load. This satisfies the test method described in TSO-C39a. Tests in other directions are conducted in a similar manner. The load to which the seat is pulled is equal to the sum of the 50th-percentile occupants weight and the seat's weight multiplied by the appropriate G-load. (e.g. three 170-lb occupants in a 50-lb seat at 9 G, would require a 5,040-lb static test load). The static load placed on the lap belts and the seat is assumed to be equivalent to the peak loads caused by the three occupants jackknifing forward in a dynamic situation. Several laboratory test series have shown that this is not the case.

A dynamic test is usually conducted by accelerating a sled to a predetermined velocity and then stopping it under controlled conditions. The seat is affixed to the sled and anthropomorphic dummies are restrained in the seat. Variations of this procedure are used, but in all cases, it is inertial loads acting on the seat and dummy that load the structure. In a dynamic test, where the seat is subjected to a 9-G decelerative force, the flailing of the occupants and the response of the seat can cause the rear legs of the seat to experience peak reaction forces significantly greater than that experienced in a static test.

In 1956, NACA and AVCIR published independent reports suggesting survivable crash environments to be used as performance criteria for passenger seats (references A-1 and A-2). Apparently, the data provided by NACA and AVCIR served as unofficial guidelines in the industry through the 1950's and 60's. In the early 60's, some transport seats were evaluated using dynamic tests (references A-3 and A-4). Later a new generation of seats were introduced in 1967 that emphasized reduced weight and were statically tested per TSO-C39 specifications. Apparently, economic pressure within the industry had lowered strength and testing requirements to the minimums allowed. Static tests were deemed as acceptable and were assumed to emulate dynamic tests. At this point, no definitive work had been done on comparing static to dynamic testing, so the requirements in TSO-C39a were left untouched.

The importance of non-static seat testing was recognized as early as 1954, when Evans (reference A-5) evaluated military passenger seats using dynamic test methods. An attempt was made in 1961 by Chisman (reference A-6) to establish the relationship between static and dynamic conditions to determine whether the specification drawn up by the Air Registration Board (England) was, in fact, a representative static method of testing passenger seats. He performed a series of static and dynamic tests and compared measured loads at various points on the seat between the two tests. The result was a "dynamic factor" which was a ratio of the maximum dynamic load measured at one point on the seat, to the maximum static load measured at the same point. The "dynamic factor" varied between 0.41 and 3.12, depending on where the load was measured.

In 1969, the FAA published work by Voyls (reference A-7) where he related static tests to dynamic tests by utilizing the vertical seat-leg reaction forces as a comparitive parameter. Three different seats, which varied in construction were tested. They were three-passenger, tourist class seats that were common to those in use at that time. Nine static tests were conducted, then 74 nondestructive dynamic tests with varying degrees of acceleration and velocity change were performed. The results of the measured peak leg-reaction forces from the dynamic tests were used to generate "sensitivity curves" for each seat. As the example in figure A-1 illustrates, the curve is a plot of velocity versus acceleration. It is obvious from the curves shown that each seat responded quite differently to the same dynamic inputs. Thus, the development of a "catch-all" sensitivity curve for seat design specifications was not possible due to the different dynamic response characteristics of each seat.

To further illustrate the difference between static and dynamic behavior in terms of peak leg reaction forces, the recent work of Chandler and Gowdy (reference A-8) can be used. They performed a series of static and dynamic tests on ten different passenger seats under various loading conditions and measured the force reactions in the seats' rear legs. The results of two test conditions are of particular interest. One was a forward static test, where body blocks were placed in each seat position and then pulled to a 9 G load. The other was a forward dynamic test where a fully occupied seat was subjected to a trapezoidal-shaped 9-G acceleration pulse similar to the one in figure A-2. The resulting peak force reactions of the most critically loaded rear leg from both tests are shown in table A-1. The rear leg loads in the dynamic test varied between 13 and 67 percent higher than those in the static test.

TABLE A-1. REAR LEG LOADS AT 9 G

Seat	Static Test (lb)	Dynamic Test (lb)	Percent Increase In Load
1	4060	5750	42
2	2940	4460	52
4	3620	6040	67
5	4000	5660	42
6	4670	7300	56
7	4370	5890	35
9	4400	4970	13
10	3690*	4610	25

Note: Seats 3 and 8 N/A.
*Extrapolated.

It is interesting to note that all the seats except 10, which failed at 8.4 G, held static loads past 9 G before failing. All the seats survived a 6-G, 300-ms dynamic test. Seats 1, 4, 5, 9, and 10 failed the 9-G dynamic test, and seats 2, 6, and 7 failed a 12-G, 170-ms dynamic test.

The dynamic testing which has been performed on transport seats has clearly demonstrated that: (1) seat and occupants respond to dynamic loading differently than they respond to static loading, and (2) each seat's response to dynamic loading is unique. Therefore, static tests cannot accurately predict dynamic performance.

It could be argued that the cost of dynamic testing would be burdensome on the manufacturers. This is a possibility since the market competition would motivate them to keep seat weight minimal, and therefore to design the seat to just meet the minimum design standards. Achieving this might require iterative testing with associated costs for both specimens and tests. To minimize this expense and facilitate their design effort, manufacturers could use FAA developed computer modeling techniques that simulate the behavior of occupied transport seats under dynamic conditions. This would greatly improve the probability of first-time success and reduce the cost of testing.

REFERENCES

A-1 Hasbrook, A. H., "Design of Passenger Tie Down, AV-CIR-44-0-66," Aviation Crash Injury Research of Cornell University, Flushing, New York, 1956.

A-2 Pinkel, I. I., and Rosenberg, E. G. "Seat Design for Crashworthiness, NACA TN 3777," Lewis Flight Propulsion Laboratory, National Advisory Committee for Aeronautics, Cleveland, Ohio, 1956.

A-3 Weber Aircraft Corporation Report No. TR-221, "Dynamic Test of the Braun Model 535-2 Sabena Seat," February 1962.

A-4 Weber Aircraft Corporation Report No. TR-215, "Eastern Airlines 720/727 Double and Triple Passenger Seat Static and Dynamic Tests," April 1962.

A-5 Evans, R. "The Relative Crash Protection Qualities and Deficiencies of Passenger Seat MIL-S-7877 (Aer) in Forward and Aft Facing Positions" TED No. NAMAE 6303, Naval Air Material Center, Philadelphia, Pennsylvania, 1954.

A-6 Chisman, S. W. "Comparison of Dynamic and Static Tests on Forward Facing Passenger Seats," T. N. Mech. Eng 348, Royal Aircraft Establishment, Ministry of Aviation, London, England, 1962.

A-7 Voyls, D.W. "Dynamic Test Criteria for Aircraft Seats," Federal Aviation Administration, Atlantic City, New Jersey, October 1969, NA-96-A.

A-8 Chandler, R.F., and Gowdy, R.V. "Loads Measured During Passenger Seat Tests, Interim Report," FAA Civil Aeromedical Institute, Oklahoma City, Oklahoma., AAC-119-81-8.

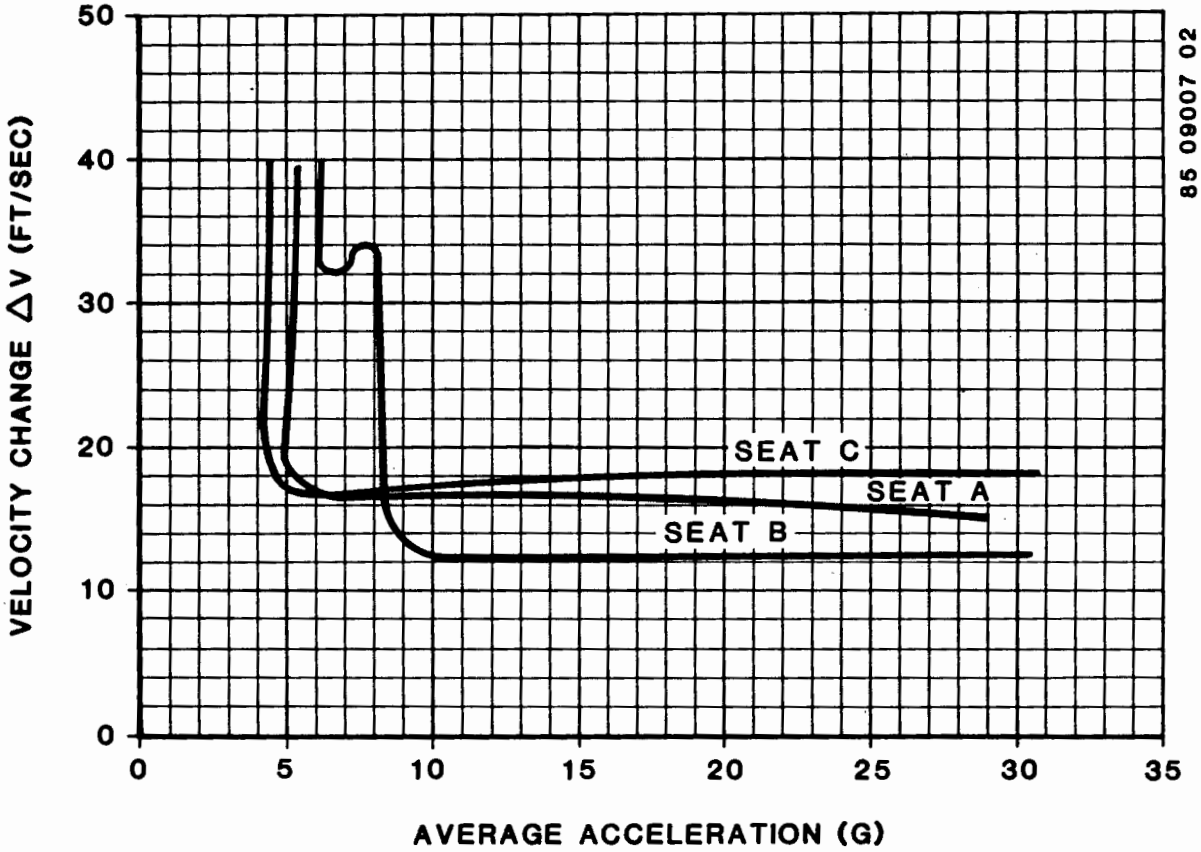

Figure A-1. Sensitivity curves developed by Voyls for transport seats.

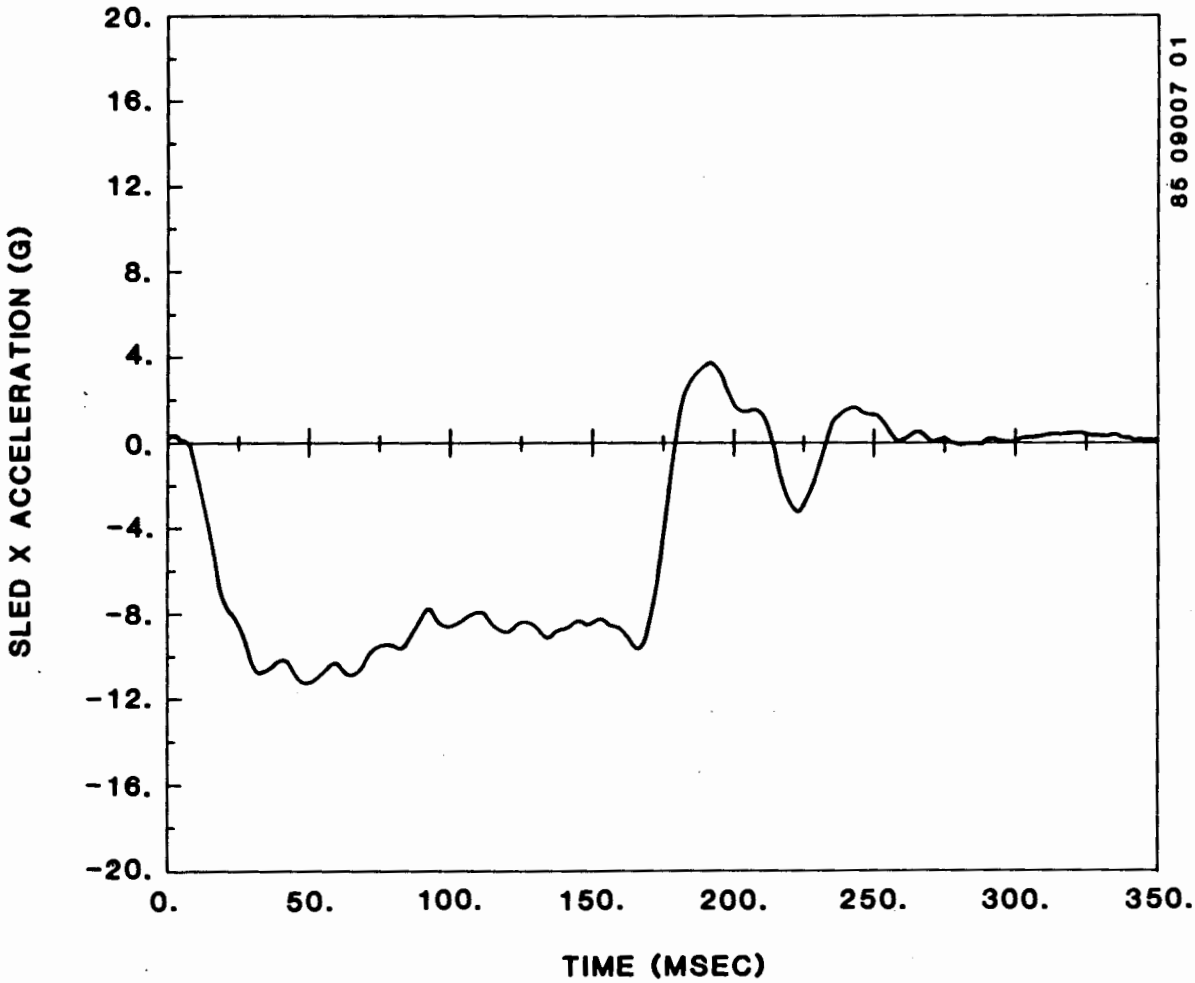

Figure A-2. Acceleration test pulse (9 G).

APPENDIX B

DETERMINING ADDITIONAL FUEL COSTS AS A FUNCTION OF INCREASING SEAT WEIGHT

To determine the effect increased seat weight has on fuel costs, it is necessary to determine what percent of the fuel is used to haul the increased weight.

Using the Form 41 data base available from I. P. Sharp Associates and Jane's All The World's Aircraft, the following parameters can be found for aircraft of interest:

NP--Number of aircraft in service

AVS--Average number of seats per aircraft

LF--Average load factor (freight and PAX)

(defined as revenue weight hauled divided

by maximum revenue weight capacity)

AVR--Average revenue weight hauled (freight and PAX)

FC--Fuel costs

MTOFW--Maximum take-off weight

OEW--Operating empty weight

The fuel cost for hauling revenue (REVFC) is:

$$REVFC = FC \times (AVR/(OEW + Fuel\ WGT + AVR)) \quad (1)$$

The last term expresses the revenue weight (AVR) as a fraction of the total weight (plane, fuel and revenue).

To determine the fuel weight (FW), it is assumed that it is less than the maximum fuel weight (MAXFW), since load factors are usually less than 100 percent. Therefore, it can be expressed as a percent of the maximum fuel needed for maximum take-off weight, so:

$$FW = MAXFW \times ((FW + OEW + AVR)/MTOFW) \quad (2)$$

The last term is the actual weight (fuel, plane and revenue) divided by the maximum take-off weight. This term is based on the assumption that the fuel weight is a function of the revenue weight.

It is also assumed that the maximum fuel weight is defined as:

$$MAXFW = MTOFW\text{-}OEW\text{-}Maximum\ Revenue\ Weight$$

and

$$Maximum\ Revenue\ Weight = AVR/LF$$

Combining these two equations yields:

$$MAXFW = MTOFW-OEW-AVR/LF \tag{3}$$

Since the maximum fuel weight can now be calculated with equation (3), equation (2) can be rewritten as:

$$FW = MAXFW(OEW + AVR)/MTOFW\ (1-MAXFW/MTOFW) \tag{4}$$

and the fuel weight can be determined.

Finally, equation (1) is used to find the fuel cost for hauling revenue.

As a basis for calculations, assume 1 lb is added to each passenger seat position. If unity (1 lb) is used as a baseline, fractional weights can be multiplied by the fuel cost per pound to determine the additional fuel costs for additional seat weight increments. The additional fuel cost for an additional pound of seat weight (FCSEAT) is expressed as:

$$FCSEAT = REVFC\ (AVS/AVR) \tag{5}$$

which is the fuel cost for hauling revenue multiplied by the number of seats on board, divided by the revenue weight.

APPENDIX C

DISTRIBUTION LIST

Civil Aviation Authority (5)
Aviation House
129 Kingsway
London WC2B 6NN England

Embassy of Australia (1)
Civil Air Attache
1601 Mass. Ave. NW
Washington, DC 20036

Scientific & Tech. Info FAC (1)
ATTN: NASA Rep.
P.O. Box 8757 BWI Airport
Baltimore, MD 21240

Northwestern University (1)
Trisnet Repository
Transportation Center Library
Evanston, ILL 60201

DOT-FAA AEU-500 (5)
American Embassy
APO New York, NY 09667

University of California (1)
Service Dept Institute of
Transportation Standard Lib
412 McLaughlin Hall
Berkely, CA 94720

British Embassy (1)
Civil Air Attache ATS
3100 Mass Ave. NW
Washington, DC 20008

Director DuCentre Exp DE LA (1)
Navigation Aerineene
9141 Orly, France

ANE-40	(2)	ACT-624	(2)	ASW-53B	(2)
ASW-52C4	(2)	AAL-62	(2)	AAC-44.4	(2)
APM-13 Nigro	(2)	M-493.2 Bldg. 10A	(5)	ACE-66	(2)
AEA-66.1	(3)	APM-1	(1)	ADL-1	(1)
ADL-32 North	(1)	APA-300	(1)	ALG-300	(1)
AES-3	(1)	AGL-60	(2)	ACT-8	(1)
ANM-60	(2)				

FAA, Chief, Civil Aviation Assistance Group (1)
Madrid, Spain
c/o American Embassy
APO-New York 09285-0001

Al Astorga (1)
Federal Aviation
Administration (CAAG)
American Embassy, Box 38
APO-New York 09285-0001

Dick Tobiason (1)
ATA of America
1709 New York Avenue, NW
Washington, DC 20006

Burton Chesterfield, DMA-603 (1)
DOT Transportation Safety Inst.
6500 South McArthur Blvd
Oklahoma City, OK 73125

DISTRIBUTION LIST

GOVERNMENT	No. of Copies
FAA NATIONAL HEADQUARTERS 800 Independence Ave., SW Washington, DC 20591	36
ATTN: Thomas McSweeney, AWS-100 (2) Art Hayes, AWS-120 (10) Henri Branting, AWS-120 (6) Richard Nelson, AWS-120 (6) Richard Kirsch, AWS-120 (6) John Rawson, ASF-100 (6)	
FAA CENTRAL REGION HEADQUARTERS 601 East 12th Street Federal Building Kansas City, MO 64106	4
ATTN: Barry Clements, ACE-100 (2) Earsa Tankeseley, ACE-110 (2)	
ALASKAN REGION HEADQUARTERS 701 C Street, Box 14 Anchorage, AL 99513	2
ATTN: Dayton Curtis, ANM-170A (2)	
FAA MIKE MONRONEY AERONAUTICAL CENTER P.O. Box 25082 Oklahoma City, OK 73125	4
ATTN: Richard Chandler, AAC-119 (2) Burt Chesterfield, AAC-100 (2)	
FAA WESTERN-PACIFIC REGION HEADQUARTERS P.O. Box 92007 Worldway Postal Center Los Angeles, CA 90009	2
ATTN: Chalres Blomer, ANM-170W (2)	

FAA SOUTHWEST REGION HEADQUARTERS 2
P.O. Box 1689
Fort Worth, TX 76101

ATTN: Don Watson, ASW-100 (2)

FAA SOUTHERN REGION HEADQUARTERS 2
3400 Norman Berry Drive
P.O. Box 20636
Atlanta, GA 30320

ATTN: William Berry, ASO-200 (2)

FAA NORTHWEST MOUNTAIN REGION HEADQUARTERS 16
17900 Pacific Highway South
C-68966
Seattle, WA 98168

ATTN: Steve Wallance, ANM-110 (6)
Bill Boxwell, ANM-111 (2)
Gary Killion, ANM-112 (2)
Iven Connally, ANM-112 (2)
James Hart, ANM-120S (2)
Joseph Starkel, ANM-120S (2)

FAA NEW ENGLAND REGION HEADQUARTERS 2
12 New England Executive Park
Burlington, MA 01803

ATTN: Jack Sain, ANE-100 (2)

FAA GREAT LAKES REGION HEADQUARTERS 2
O'Hare Lake Office Center
2300 East Devon Avenue
Des Plaines, IL 60018

ATTN: Walter Horn, ACE-115C (2)

FAA Denver Aircraft Certification Office
10455 East 25th Avenue
Aurona, CO 80010

ATTN: Woodford Boyce, ANM-170D (2)

FAA EASTERN REGION HEADQUARTERS 2
JFK International Airport
Fitzgerald Federal Building
Jamaica, NY 11430

ATTN: Ray Borowski, AES-210 (2)

FAA EUROPEAN OFFICE HEADQUARTERS 2
15 Rue de la Loi (3rd Floor)
B-1040 Brussels, Belgium
c/o American Embassy APO, NY 09667

ATTN: Tom Horeft, AEU-100 (2)

FAA LOS ANGELES AIRCRAFT CERTIFICATION OFFICE 16
4344 Donald Douglas Drive
Long Beach, CA 90808

ATTN: Keith Anderson, ANM-100L (2)
Steve Soltis, ANM-102N (10)
Anthony Bonnano, ANM-130L (2)
Fred Jenkins, ANM-130L (2)

NATIONAL AERONAUTICS AND SPACE ADMINISTRATION 4
Mail Stop 497
Langley Rearch Center
Hampton, VA 23665

ATTN: Charles Blankenship (2)
Emilio Alfaro-Bou (2)

NASA DRYDEN FLIGHT RESEARCH FACILITY
Edwards, CA 93523

ATTN: Russ Barber 92)

CIVIL AVIATION AUTHORITY 4
CAA Brabazon House
Redhill, Surrey U.K. RH1SQ

ATTN: Roger Christmas (2)
Ray Christie (2)

NATIONAL TRANSPORTATION SAFETY BOARD 6
800 Independence Avenue, SW
Washington, DC 20594

ATTN: John Clark, TE-60 (2)
Jerry Walhourt, TE-60 (2)
Bill Laynor, TE-60 (2)

NAVAL AIR TEST CENTER 2
Patuxent River, MD 20670-5304

ATTN: Dan Watters (2)

NON GOVERNMENT

Donald S. Barrow 2
Sicma America, Inc.
6929 Northwest 46th St.
Miami, FL 33166

Vahe Bilezikjian 2
Weber Aircraft
Div. of Walter Kidde and Co.
2820 Ontario St.
Burbank, CA 91510

John Reese 6
Aerospace Industry Association
1725 DeSales St., NW
Washington, DC 20036

Roy G. Fox 2
Bell Helicopter Textron
Dept. 81, Flight Technology
P.O. Box 482
Fort Worth, TX 76101

Bill Shook 2
McDonnell Douglas Corp.
3855 Lakewood Blvd.
Long Beach, CA 90846

John L. Gallagher
McDonnell Douglas Corp.
3855 Lakewood Blvd.
Long Beach, CA 90846 2

David L. Godfrey
Leigh Instrument Ltd.
P.O. Box 532
Coronado, CA 92118 2

Dayton L. Hartley
Beech Aircraft Corp.
9709 E. Central
Wichita, KS 67201 2

Fernon J. Clark
American Airlines
3800 N. Mingo Road
Tulsa, OK 74151 2

Richard E. Coykendall
United Airlines, Engr. Dept.
San Francisco Int'l. Airport, CA 94128 2

Peter Meicklen
British Embassy
3100 Massachusetts Ave., N.W.
Washington, DC 20007 2

Edmund Boullay
Embassy of France
2164 Florida Ave., N.W.
Washington, DC 20008 6

Dan M. Motley, Jr.
Lockheed-Georgia Co.
86 South Cobb Drive
Marietta, GA 30063 2

Werner Muenster
Messerschmitt Bolkow-Blohm
Transport Aircraft Division
D2103 Hamburg 95
P.O. Box 950109 2

Charles E. Nuckolls
Mechanical Engr. Dept.
Univ. of Central Florida
Box 25000
Orlando, FL 32751 2

Donald A. Holmes
USAir
Greater Pittsburgh Int'l. Airport
Eng. Dept. - Hangar #3 (Rm 221)
Pittsburg, PA 15231 2

Walter Andrews
RMS Technologies, Inc.
One Neshaminy Interplex
Suite 306
Trevose, PA 19047 6

Dennis Manibusan
Ozark Airlines, Inc.
Box 10007-Lambert
St. Louis Int'l airort
St. Louis, MO 63145 2

Ralph G. Marrujo
Fairchild Burns Co.
1455 Fairchild Road
Winston-Salem, NC 27105 2

Richard Soloski
Cessna aircraft Company
P.O. Box 7704
Wichita, KS 67217 2

Air Transportation Association
1709 New York Avenue, N.W.
Washington, DC 20006 6

ATTN: Vern Ballenger (2)
Richard A. Tobiason (2)
Don Collier (2)

Donald W. Wells
Leigh Instruments, Ltd.
2680 Queensview Drive
Ottawa, Ontario
CANADA K2B8J9 2

Boeing Commerical Airplane Co.
P.O. Box 3707
Seattle, WA 98124 4

ATTN: Barry Eberhardt (2)
Edward Widmayer (2)

Gill Wittlin
Lockheed California Co.
Dept. 76-12
Building 63, Plant A-1
Burbank, CA 91503 6

DOT/FAA CT85/36, Cannon, Mark R., Crash dynamics program transport seat performance and cost study benefit study, ACT Library, 00020180

Simula, Inc.
10016 S. 51st Street
Phoenix, AZ 85044 27

ATTN: Richard Zimmermann (2)
Mark Cannon (25)