FAA WJH Technical Center
00090647

DOT/FAA/CT-85/4

Antimisting Kerosene: Evaluation of Improved FM-9 Additive

A. Yavrouian
P. Parikh
V. Sorohia

Jet Propulsion Laboratory
California Institute of Technology
Pasadena, California

June 1986

This document is available to the U.S. public through the National Technical Information Service, Springfield, Virginia 22161.

U.S. Department of Transportation
Federal Aviation Administration
Technical Center
Atlantic City Airport, N.J. 08405

NOTICE

This document is disseminated under the sponsorship of the Department of Transportation in the interest of information exchange. The United States Government assumes no liability for the contents or use thereof.

The United States Government does not endorse products or manufacturers. Trade or manufacturer's names appear herein solely because they are considered essential to the object of this report.

Technical Report Documentation Page

1. Report No.	2. Government Accession No.	3. Recipient's Catalog No.
DOT/FAA/CT-85-4		

4. Title and Subtitle	5. Report Date
Antimisting Kerosene: Evaluation of Improved FM-9 Additive	June 1986
	6. Performing Organization Code
7. Author(s) A. Yavrouian, P. Parikh, and V. Sarohia	8. Performing Organization Report No. JPL Publication D-2581
9. Performing Organization Name and Address Jet Propulsion Laboratory, California Institute of Technology, 4800 Oak Grove Drive, Pasadena, CA 91109	10. Work Unit No. (TRAIS)
	11. Contract or Grant No. DTFA-3-80-A-00215
12. Sponsoring Agency Name and Address U.S. Department of Transportation, Federal Aviation Administration, Atlantic City Airport, New Jersey 08405	13. Type of Report and Period Covered Final August 1983 - November 1984
	14. Sponsoring Agency Code

15. Supplementary Notes

Technical Contract Monitor: Mr. Bruce Fenton, Fuel/Engine Safety Branch
FAA Technical Center
Atlantic City Airport, New Jersey 08405

16. Abstract

Optimization of FM-9 dissolution rate to attain both acceptable mist suppression and degradation properties within 15 to 20 minutes of in-line blending was carried out by Imperial Chemical Industries (ICI). This report discusses the evaluation of the FM-9 with improved dissolution rate and consequently better degradability characteristics for compatibility with engine filters and fuel control system. This additive was identified as a candidate additive to be used in a Control Impact Demonstration (CID) test. The major findings of the investigations are: 1) Quality of the FM-9 slurry meets the metering and dispersion requirements for single stage, in-line blending. 2) The dissolution rate at ambient fuel temperatures (15-20°C) is sufficient, and produces AMK fuel with adequate fire suppression in 30 minutes after blending. 3) Freshly blended fuel can be degraded without difficulty with a specific power requirement of less than 30 $kWsL^{-1}$. 4) Contamination with large amounts of bulk water leads to formation of gelled emulsion on the interface. The water vapor condensation on AMK surfaces produced a string-like second phase. 5) Low temperature evaluation indicated no phase separation and gel formation problems. 6) Significant loss in pumpability performance with FM-9 AMK was observed at both room and low temperature using the Cessna 441 boost pump. However, the deterioration of pumpability performance was not as significant with AMK as compared with Jet A using the DC-10 boost pump.

17. Key Words	18. Distribution Statement
Aircraft Fires, Aircraft Safety, Safety Fuels, Antimisting Fuel	This document is available to the U.S. Public through the National Technical Information Service, Springfield, Virginia 22161.

19. Security Classif. (of this report)	20. Security Classif. (of this page)	21. No. of Pages	22. Price
Unclassified	Unclassified	56	

Form DOT F 1700.7 (8-72) Reproduction of completed page authorized

Acknowledgements

This work presents the results of one phase of research carried out at Jet Propulsion Laboratory, California Institute of Technology, Contract NAS7-918 Task Order RE152, Amendment 298, sponsored by Department of Transportation/Federal Aviation Administration Technical Center, Atlantic City Airport, New Jersey, under Agreement No. DTFA03-8000215. The authors extend their gratitude to Messrs Bruce Fenton, G. Klueg, and W.T. Westfield for many valuable technical suggestions throughout this program. We are also grateful to Messrs Wayne Bixler, Stan Kikkert, and R. Smither for their assistance in design, fabrication, assembly, and acquisition of the experimental data.

TABLE OF CONTENTS

	PAGE
EXECUTIVE SUMMARY	viii
1.0 INTRODUCTION	1
2.0 MATERIALS, EXPERIMENTAL PROCEDURES AND AMK CHARACTERIZATION TESTS	1
2.1 Materials	1
2.2 Experimental Procedure and AMK Characterization	2
2.2.1 AMK Blending Assembly and Procedure	2
2.2.2 Screen Filter Ratio Test and Orifice Flow Cup Test (ICI Cup Test)	5
2.2.3 Flammability Comparison Test Apparatus (FCTA) and JPL's Mini Wing Shear Fire Test	5
2.2.4 Sample Degradation	6
2.2.5 Turbidity	8
2.2.6 Water Reaction Test	8
2.2.7 Low Temperature Gel Formation and Pumpability Test	9
2.2.8 Slurry Preparation and Characterization	14
3.0 EXPERIMENTAL RESULTS AND DISCUSSIONS	14
3.1 Slurry Properties	14
3.2 Blending and Fire Suppression Capabilities	15
3.3 Degradability	21
3.4 Unintentional Degradation	25
3.5 Water Reaction and Low Temperature Behavior	28
3.6 Pumpability of FM-9 AMK Fuel	28
4.0 CONCLUSIONS	29
REFERENCES	35

TABLE OF CONTENTS (Continued)

	Page
APPENDICES	
A - BATCH-BLENDED AMK RECEIVED BY JPL AMK-FM-0.30 PERCENT SOLIDS	A-1
B - OPERATING PROCEDURE FOR FILTER RATIO TEST	B-1
C - DESCRIPTION OF FILTER SCREEN DEVICE	C-1
D - OPERATING PROCEDURE FOR ICI ORIFICE FLOW CUP TEST	D-1
E - OPERATING PROCEDURE FOR FCTA TEST	E-1
F - JPL PROCEDURE FOR AMK SLURRY PARTICLES SIZE EVALUATION	F-1
G - DISTRIBUTION LIST	G-1

LIST OF ILLUSTRATIONS

FIGURE		PAGE
1	IN-LINE BLENDING APPARATUS	2
2	SCHEMATIC DIAGRAM OF THE FLAMMABILITY COMPARISON TEST APPARATUS	6
3	SCHEMATIC OF DEGRADER/FILTERABILITY APPARATUS	7
4	LOW TEMPERATURE PUMPING FACILITY	10
5	SCHEMATIC OF AMK PUMPABILITY TEST APPARATUS	11
6	PUMPABILITY CRITERION FOR AMK FUEL	12
7	AIRCRAFT WING TANK ENVIRONMENTAL SIMULATOR	13
8	MONITORING OF AMK FUEL DEVELOPMENT WITH TURBIDIMETER	18
9	MONITORING OF JCK 14-247-2 SLURRY BLENDING WITH TURBIDIMETER	19
10	MONITORING OF AMK BLENDING WITH TURBIDIMETER	24
11	PUMPABILITY OF IMPROVED FM-9 AMK FUEL RELATIVE TO JET A AND AT COLD TEMPERATURES	30
12	PUMPABILITY OF FM-9 AMK FUEL AT ROOM TEMPERATURE RELATIVE TO JET A USING CESSNA PUMP	31
13	PUMPABILITY OF FM-9 AMK FUEL AT LOW TEMPERATURE RELATIVE TO JET A AT COLD TEMPERATURE USING CESSNA PUMP	32
14	PUMPABILITY OF IMPROVED FM-9 AMK FUEL ALL TEMPERATURES USING CESSNA PUMP	33
15	PUMPABILITY OF IMPROVED FM-9 AMK FUEL ALL TEMPERATURES USING DC-10 PUMP	34

LIST OF TABLES

TABLE		PAGE
1	BASE FUEL PROPERTIES	3
2	EVALUATION OF FM-9 SLURRY	15
3	EVALUATION OF JCK 14-163-3 SLURRY (RMH 30328 BASE FUEL)	16
4	EVALUATION OF FIRE PROTECTION CHARACTERISTICS BY FCTA	17
5	EVALUATION OF JCK 14-247 SLURRY	20
6	EVALUATON OF FM-9 SLURRIES	22
7	DEGRADABILITY OF FM-9 AMK FUELS	26
8	UNINTENTIONAL DEGRADABILITY OF FM-9	27

Executive Summary

During the past few years, studies by the Federal Aviation Administration (FAA) and other government agencies have shown that the hazards from aircraft crash fires might be significantly decreased if an antimisting kerosene (AMK) fuel could be utilized. The addition of polymeric additive at low concentrations to jet fuels is known to suppress mist formation and ignition of the fuels under circumstances often encountered in survivable aircraft crash landings. An antimisting additive, FM-9™ has been developed by Imperial Chemical Industries (ICI) and is available under the trade name AVGARD. This material when dissolved in jet fuels imparts a strong time-dependent threshold type shear-thickening behavior. In case of fuel spillage from a ruptured fuel tank during an aircraft crash, the fuel misting is prevented. Simulated aircraft crash landing fuel spillage tests have indicated that fuel misting can be sufficiently suppressed, and the ignition and the subsequent fireball formation can be greatly reduced or eliminated.

Optimization of FM-9 dissolution rate to attain acceptable mist suppression and degradation properties within 15 to 20 minutes of inline blending was carried out by ICI. This report discusses the evaluation of FM-9 variant which has better dissolution rate and consequently better degradability and compatibility with engine filters and fuel control system and was identified as a candidate additive to be used in a Control Impact Demonstration (CID) test.

1.0 INTRODUCTION

During the past few years, studies by the Federal Aviation Administration (FAA) and other government agencies have shown that the hazards from aircraft crash fires might be significantly decreased if an antimisting kerosene (AMK) fuel could be utilized (Reference 1). The addition of polymeric additive at low concentrations to jet fuels is known to suppress mist formation and ignition of the fuels under circumstances often encountered in survivable aircraft crash landings. An antimisting additive, FM-9™ has been developed by Imperial Chemical Industries (ICI) and is available under the trade name AVGARD. This material when dissolved in jet fuels imparts a strong, time-dependent, threshold type, shear-thickening behavior. In case of fuel spillage from a ruptured fuel tank during an aircraft crash, the fuel misting is prevented. Simulated aircraft crash wing fuel spillage tests and large scale ground-to-ground crash tests have indicated that fuel misting can be sufficiently suppressed, and the ignition and the subsequent fireball formation can be greatly reduced or eliminated.

Studies have indicated that the optimum method of making antimisting fuel is by a single-stage blending at the aircraft fueling point. Results reported in References 2, 3 and 4 have shown that the FM-9 additive, dispersed in a carrier fluid, could be blended into aviation kerosene to give a fuel which has adequate fire resistance 15 to 20 minutes after blending.

Work on optimization of FM-9 dissolution rate was carried out by ICI and led to the development of several FM-9 variants with improved dissolution characteristics. This report discusses the evaluation of FM-9 variant which has a better dissolution rate and, consequently, better degradability and compatibility with engine filters and the fuel control system. This additive is the latest development in the FM-9 variants formulations and was used in the Controlled Impact Demonstration (CID). The period of performance for the work reported herein was from August, 1983 thru November, 1984.

2.0 MATERIALS, EXPERIMENTAL PROCEDURES AND AMK CHARACTERIZATION TESTS

2.1 Materials

The antimisting additive FM-9 used in this program is a proprietary fuel additive developed by ICI. The FM-9 is a high molecular weight polymer with specifically designed properties for use with jet fuels. The additive is in the form of a free-flowing powder which is formulated with carrier fluids into a dispersion called AMK slurry. This slurry is available from ICI Americas, Inc.

In 1983, JPL evaluated approximately 40 batches of FM-9 variants, including four batches of additives which were used on the large-scale wing-spillage test facility at the FAA Technical Center, Atlantic City, N.J. The results of this evaluation were reported separately (Reference 9). This FM-9 variant additive was prepared and formulated by ICI as a 25-percent polymer solid loading in the carrier fluid. Only the results from the evaluation of this formulation are presented.

Lots JCK 14-247-1 and JCK 16-95-1 were extensively evaluated. These slurries were prepared by ICI Americas Inc. in Wilmington, Delaware.

The base fuel used in this program was Jet A aviation kerosene that came mainly from two sources: ICI, as lot RMH 30328 in 55-gallon drums; and Texaco/Martin Aviation Terminal, Burbank Airport, California. The fuel was stored as received in 55-gallon drums. Most of the tests were done using the Texaco Jet A and lot RMH 30328 was used as a control. The Texaco Jet A fuel water content stabilized in the 70 to 80 ppm range. Some of the properties of these base fuels (as received) relevant to AMK are presented in Table 1.

2.2 Experimental Procedure and AMK Characterization

2.2.1 AMK Blending Assembly and Procedure

The in-line blending setup which was used to produce AMK is presented in figure 1.

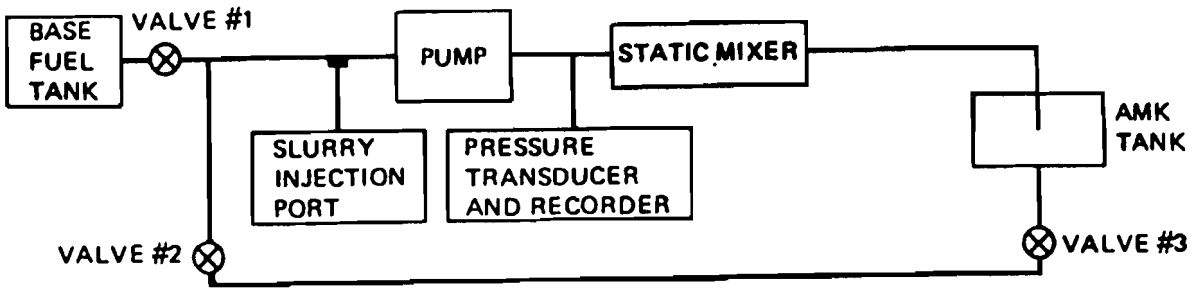

Figure 1. IN-LINE BLENDING APPARATUS

The blending system consists of a slurry injection port, a pump, and the mixing element (static mixer). The entire system was made from off-the-shelf components with the exception of the fuel tanks. The injection port was part of the B-D Luer-Lock automatic syringe refill kit. The pump drive module was a high flow rate, explosion-proof unit, Model RP-F, manufactured by (FMI) Fluid Metering Inc., Oyster Bay, N.Y. The RP-F unit employs a 1/4-HP motor with model RP-F-2 pump head module. The pump head was made of 316 stainless steel with sintered carbon for cylinder liner material. The pump has a maximum flow rate of 16 gph and a maximum pressure rating of 100 psi. The pump has a simplified positive displacement mechanism based on a valveless pumping mode and was recommended for handling semi-solid fluids and heavy slurries. The main component of the blending system consists of a Static Mixer® manufactured by the Kenics Corp. The device is simply a straight 1/4-inch stainless steel tube, 9 inches long with a series of fixed, helical elements enclosed within the tubular housing. The helical design of the central element causes a transverse flow to arise normal to the pipe axis. As a consequence, fluid near the center of the pipe is rotated out toward the circular boundary, and vice versa. Radial mixing and multiple flow separation was achieved in this manner. The unit is an in-line mixer having no moving parts and no external power requirements; in addition, the unit is amenable to quick changes, has low cost of operation, and hardly requires any maintenance. The components of the in-line blending system were assembled using flexible PVC tubing which gives some see-through capabilities to the system.

TABLE 1. BASE FUEL PROPERTIES

ASTM ANALYSIS	ICI RMH 30328 JET A	TEXACO-BURBANK JANUARY DELIVERY JET A	TEXACO-BURBANK JULY DELIVERY JET A	TEXACO-BURBANK AUGUST DELIVERY JET A	TEXACO-BURBANK SEPTEMBER DARK-BROWN JET A	MIAMI JET A
Water by Karl Fisher, ppm, (D-1744)	89	117	104	146	38	94
Aromatics Vol., %, (D-1319)	17.0	18.9	20.0	20.4	20.6	18
Olefins, Vol., %, (D-1319)	1.2	-	2.0	1.8	1.7	2.1
Saturates, Vol., %, (D-1319)	81.8	-	78.0	77.8	77.7	79.9
Naphthalenes, Vol., %, (D-1840)	-	0.44	1.06	1.07	2.65	1.56
Acidity, Mg/KOH/gm., (D-3242)	-	NIL	0.002	0.002	0.0007	0.004
Distillation °F, (D-86)	-					
IBP		331	329	324	336	316
5%		354	354	348	352	340
10%		362	362	358	374	354
20%		374	374	368	391	370
30%		385	385	380	405	383
40%		396	396	394	418	394
50%		406	406	403	431	406
60%		418	418	415	446	420
70%		430	430	427	460	436
80%		444	446	442	480	455
90%		464	456	464	506	478
95%		482	485	481	522	500
E.P.		506	506	511	543	520
REC.%		98.5	98.5	98.5	98.5	98.5
RES.%		1.5	1.5	1.5	1.5	1.5
LOSS.%		-0-	-0-	-0-	-0-	-0-
Freezing Point, °C, (D-2386)	-44.5	-49.5	-	-	-43.5	-
Viscosity cSt @ -20°C (D-445)	-	4.91	-		6.67	
Flash Point, °F, (D-56)	-	-		124	127	

TABLE 1. BASE FUEL PROPERTIES (cont'd)

ASTM ANALYSIS	MOJAVE JULY JET A FIRST BLEND	MOJAVE TANK 1 8-4-84 JET A	CINCINNATI JULY DELIVERY JET A	EDWARDS T-8-10-D-007 JET A	EDWARDS AFB 9-13 JET A	FAA JET A 10-4-84 COLORLESS	EDWARDS AFB-CID CRASH JET A COLORLESS
Water by Karl Fisher, ppm, (D-1744)	86	100	65	109	68*	57	67, 90*
Aromatics Vol., %, (D-1319)	21.8	20.9	16.8	19.7	20.7	18.1	17.9
Olefins, Vol., %, (D-1319)	2.0	2.1	1.5	1.8	1.5	1.7	1.5
Saturates, Vol., %, (D-1319)	76.2	77.0	81.7	78.5	77.8	80.2	80.6
Naphthalenes, Vol., %, (D-1840)	1.29	1.15	1.92	1.36	1.34	2.62	0.76
Acidity, Mg/KOH/gm., (D-3242)	.0005	0.002	0.004	0.002	0.001	0.006	0.001
Distillation °F, (D-86)							
IBP	318	331	342	324	329	352	342
5%	344	340	362	348	349	376	367
10%	352	354	371	358	360	387	377
20%	367	366	383	374	374	398	388
30%	379	376	392	386	386	406	397
40%	390	387	401	400	400	414	407
50%	401	400	411	412	413	424	415
60%	412	412	422	426	426	433	426
70%	426	426	434	439	440	442	438
80%	442	448	451	456	456	457	451
90%	465	469	472	476	476	474	470
95%	489	492	483	494	494	490	486
E.P.	501	518	512	511	508	508	510
REC.%	98.5	98.5	98.5	98.5	98.5	98.5	98.0
RES.%	1.5	1.5	1.5	1.5	1.5	1.5	1.5
LOSS.%	-0-	-0-	-0-	-0-	-0-	-0-	0.5
Freezing Point, °C, (D-2386)	-	-	-	-	-	-43	-49
Viscosity cSt @ -20°C (D-445)	-	-	-			5.92	5.60
Flash Point, °F, (D-56)	120	116	-	125	122	135	130

*Water Separation Index, Modified (ASTM D-2550)

In brief, the AMK blending operation consisted of placing the appropriate weight of slurry in a 50 ml B-D Plastipak[c] Luer-Lok tip disposable syringe and then locking the syringe into the injection port. Care was taken that the slurry did not make contact with the fuel, since wetting of the slurry with jet fuel at this stage causes premature swelling of the slurry at the wetted surface, and result in the formation of transparent gel which makes the subsequent dispersion of the polymer particles very hard. With valves #1, #2, and #3 closed, half the required amount of jet fuel was placed in the base fuel tank and the other half was placed in the AMK tank. In a typical run 1.5 kg of Jet A was used in the base fuel tank, 36.0 gm of slurry was used in the syringe and 1.5 kg of Jet A was placed in the AMK tank (1 gallon polyethylene bottle). After the pump was turned on, valve #1 is opened. With the opening of the valve, the slurry from the syringe was carefully injected in the fuel line.

The AMK was collected in the tank and allowed to equilibrate for the desired amount of time. The AMK tank was gently stirred for 15 to 20 seconds at the start to allow mixing of the Jet A fuel. It should be noted that the end of the blending was always considered the start of the polymer equilibration process.

After each batch, the system was cleaned by circulating jet fuel through the system with valve #1 closed and valves #2 and #3 opened. In addition to the small-scale (one liter/minute) blender, some of the batches were tested for their dissolution properties using JPL's 5-10 gpm blender. This blender was similar to the one designed and built at JPL for blending large amounts of AMK for evaluation of the FM-9 variants at the FAA Technical Center, Atlantic City, N.J. A detail description of this blender can be found in reference 4.

The AMK blending was monitored by fire test, filter ratio, cup test, and by following the turbidity of the fuel with time. For the large scale runs the solid content of the fuel was also measured.

2.2.2 Screen Filter Ratio Test and Orifice Flow Cup Test (ICI Cup Test)

A filter ratio device (standardized by the United States/United Kingdom AMK Technical Committee) was utilized as the primary method of measuring viscosity properties. The details of this test are given in Appendix B and the description of the filter ratio device is given in Appendix C.

2.2.3 Flammability Comparison Test Apparatus (FCTA) and JPL's Mini Wing Shear Fire Test

The FCTA, shown schematically in figure 2, is described in detail in References 5 and 6. Air is released from a pressure vessel through a sonic orifice into a straight tube, where it atomizes a small jet of fuel. The spray issues through a conical diffuser into ambient air and is ignited by a propane torch. The fuel is delivered by a single stroke displacement pump, and issues through an upstream facing elbow with an inside diameter of 0.52 cm. The inside diameter of the straight mixing tube is 2.66 cm. The air mass flow is controlled by varying the air pressure and the fuel mass flow is controlled by a constant speed actuator that regulates the fuel pump. Once the air pressure and speed control are set by the operator, the operation of the apparatus is controlled by an automatic sequencing switch. Appendix E describes the JPL operating procedure for FCTA test.

The primary method to test the development of freshly blended AMK was done by the mini wing shear fire test. For the test, a measured amount (one gallon) of fuel is released from a two-inch (I.D.) pipe in front of a two-inch (I.D.) cylinder (flame holder) in an airstream produced by an open-jet wind tunnel.

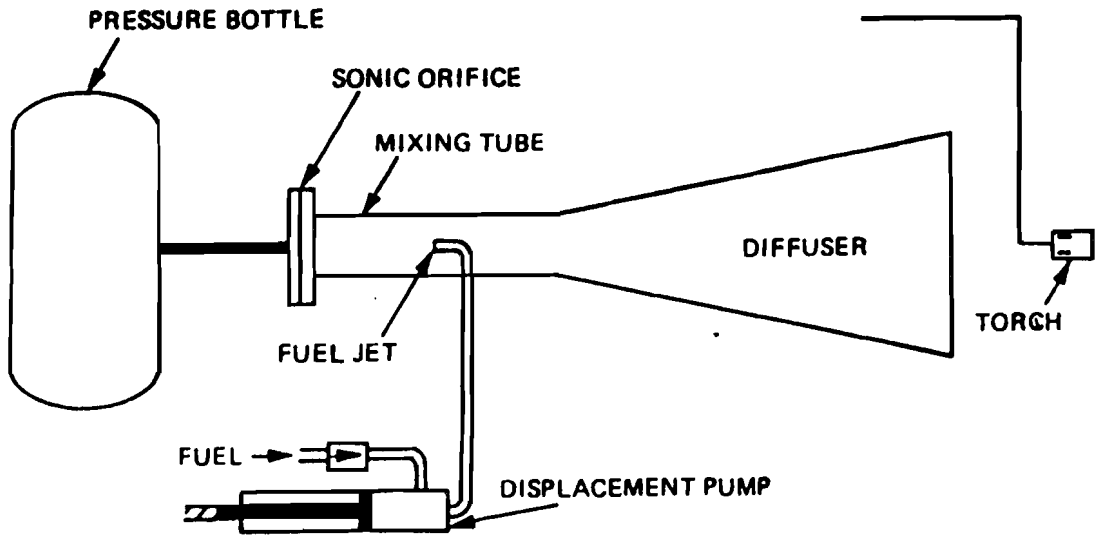

Figure 2. **SCHEMATIC DIAGRAM OF THE FLAMMABILITY COMPARISON TEST APPARATUS**

An oxyacetylene torch is used as an ignition source located two inches downstream of the cylinder. The airstream velocities used for the fire test were 120 (61.7 m/s), 130 (66.8 m/s), and 140 (72.0 m/s) knots. This velocity was measured with a pitot tube located upstream of the nozzle exit plane. The flammability of the freshly blended fuel was compared to the flammability of ICI-prepared equilibrated AMK. It was assumed that the ICI prepared fuel will pass the FAA's large-scale wing spillage fire test. The length of the flame for the samples was visually observed to determine a rating of "pass," "fail," or "marginal." To follow the development of freshly blended AMK, one gallon samples of the fuel were tested for fire protection at various times after blending, and the time at which the fuel received a "pass" rating at 130 knots was also recorded. An additive batch, with an acceptable dissolution rate will get a "pass" fire test rating within 15 to 20 minutes after blending. It should be pointed out that this was one of the criteria for the evaluation of the antimisting additive dissolution rate.

2.2.4 Sample Degradation

The degradation of the samples was done in a blender with a 5-cup [1.25 liter] container. The sample size was always kept the same (300 ml) and samples were degraded for 30 seconds at 22°C at the highest speed (liquefy). The degraded samples were characterized by filter ratio tests and were always done within one minute after the sample was degraded. It is very important that the time after degradation at which the samples were characterized is kept always the same (one minute), especially for freshly blended samples where the additive in some cases is not fully equilibrated. In these cases, the undissolved polymer is not degraded during the 30-second degradation period and continues to dissolve.

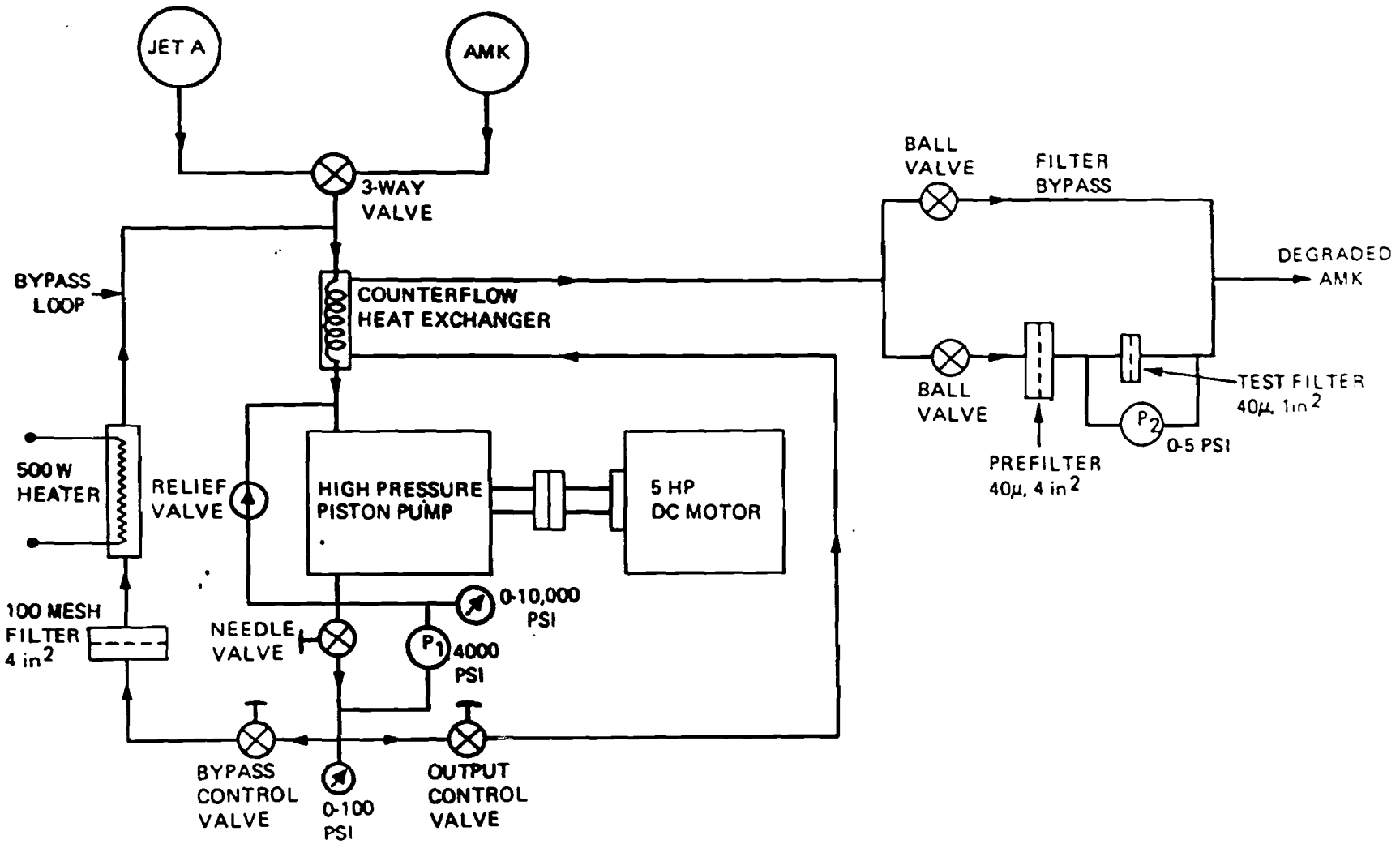

Figure 3. SCHEMATIC OF DEGRADER/FILTERABILITY APPARATUS

If the FR test is done past the one-minute period, very high filter ratios can be obtained. The results of this test are presented as FR_d where t is the time in minutes after blending, the degradation was performed. The equilibrated AMK fuel gives FR_d values of 3-4 under these conditions. Based on this value, if FR_d^{30} is less than 5, the AMK fuel is considered to have good degradability characteristics (and dissolution); if more than 10, it is poor; and between 5-10, is marginally degradable.

The degradability of equilibrated and freshly blended AMK fuel was evaluated also by degrading the samples using a continuous-flow single pass degrader which utilized a pressure drop across a needle valve. The schematic of the apparatus is included in Figure 3. The degrader operated at 4000 psi pressure drop and the degradability was evaluated in terms of the filterability of the degraded fuel. The filterability of the sample was monitored for at least 30 minutes and up to one hour. AMK fuel has an acceptable degradability if 20-30 minutes after blending no filter plugging is observed with 4000 psi pressure drop across the needle valve and a 1 gpm/in^2 volume flux through the filter (325 mesh (40 μm)) stainless steel screen) at 20°C inlet fuel temperature.

As in the blender degradation discussed above, one should be careful during characterization and interpretation of the FR data. It should be pointed out that in the degrader apparatus (Figure 3), as in the engine fuel system, the fuel was passed immediately through the filters. If one does the degradation and the filtration separately with some time in between, the partially equilibrated fuel may give rise to filtration difficulties.

For degradation of the equilibrated AMK fuel, JPL's inline degrader-filtration apparatus (Figure 3) gave a FR values in the 1.2 to 1.08 range. Detailed description of the apparatus and the degradation procedure can be found in Reference 7.

Partial degradation of AMK fuel and subsequent characterization by FR test was used also to evaluate the unintentional degradability of the fuel. The degradability (as measured by FR) of ICI prepared equilibrated AMK fuel was used as a baseline control. The partial degradation to simulate unintentional degradation was done by pumping the fuel in one or more passes through the Kenics (K) Mixer using the in-line blending apparatus. Equilibrated FM-9 AMK fuel after one pass-through the static mixer gives an FR of 13 to 15. Such measurements on non-equilibrated fuel were not performed during this study.

2.2.5 Turbidity

The measurements of turbidity were done with model DRT-100 Turbidimeter manufactured by H.F. Instruments. The DRT-100 Turbidimeter is a continuous reading nephelometer which measures reflected light from scattered particles in suspension and direct light passing through a liquid. The resulting ratioed optical signal is stabilized and amplified to energize a meter. The instrument provides a linear readout of turbidity in nephelometric turbidity units (NTU).

2.2.6 Water Reaction Test

Visual observation of the interaction of water with AMK fuel showed strings which forms when water vapor is condensed on a cold fuel surface. This was done in a one liter "Pyrex," heavy wall, filtering flask. AMK fuel (400 cc)

was placed in the stoppered flask and the head space evacuated to about 3 inches Hg and sealed. The flask was then immersed halfway in CO_2/acetone bath at -30°C. After the temperature of the fuel reached -20°C, the flask was taken out from the bath and ambient air was allowed to enter the flask until ambient pressure was reached. This process took approximately 20 seconds. The fuel was gently swirled and then allowed to rest. Visual observations were then made of string formation due to polymer/water reaction; their relative amounts and lengths were noted. At these conditions, equilibrated (ICI) FM-9 AMK fuel will form small amounts of strings, and its behavior at these conditions was used as a control.

2.2.7 Low Temperature Gel Formation and Pumpability Test

The low temperature gel formation test was done in the apparatus described for the water reaction test. The AMK fuel was placed in the flask, the head space was inerted with dry nitrogen gas, closed, and then placed in CO_2/acetone bath at -30°C. After the fuel temperature reached -25°C, it was stirred using a magnetic stirrer. Stirring and cooling of the fuel continued for 10 minutes. The flask was then opened and fuel poured as fast as possible through a four-mesh stainless steel screen. The presence of transparent gel on the top of the screen, the relative amount of the gel and its behavior with time (warming) were visually noted. The test is a "pass" or "fail" depending on the collection of gel on top of the screen. The ICI equilibrated FM-9 AMK fuel under these conditions does not give any gel.

The impact of gel formation after exposure of the fuel to subzero temperatures was characterized by flammability (fire test). This was done as described in Section 2.2.3 using one gallon of fuel which has been cooled down to -25°C.

The low temperature pumpability performance of the AMK fuel was evaluated and compared with Jet A performance mainly by determining the pumping efficiency. This was done in the JPL low temperature facility shown in Figure 4 which consists of an Airborne IC12-17 (Cessna 441) centrifugal fuel boost pump mounted at the bottom of a jacketed 10-gallon fuel tank, equipped with hand stirrer, inlet and outlet for nitrogen gas, and a thermometer. The schematic of the apparatus is shown in Figure 5. The fuel was placed in the tank and the air above the fuel replaced with nitrogen gas in order to prevent moisture condensation at low temperatures. Using an acetone/dry ice mixture in the jacket and slow stirring, the fuel temperature was lowered to the desired temperature (-25°C to -30°C). The efficiency of the boost pump was determined by measurements of the flow rate, pressure rise (ΔP), and the input electric power to the pump. The pumping efficiency is defined as

$$\eta = \frac{\dot{Q}\Delta P}{VI} \times \text{Conversion Factor}$$

where $\dot{Q}$ = Volume flow rate; V = Input voltage
ΔP = Pressure differential; I = Input current

The Airborne IC12-17 pump specifications for Jet A are: 15 psi at 4.4 GPM and 19 psi minimum at 2.4 GPM. The actual measurement gave: 15 psi at 5.2 GPM and 19 psi at 2.4 GPM. Figure 6 presents the pumpability criterion employed to evaluate the performance of AMK fuels. The following figures of merit were used:

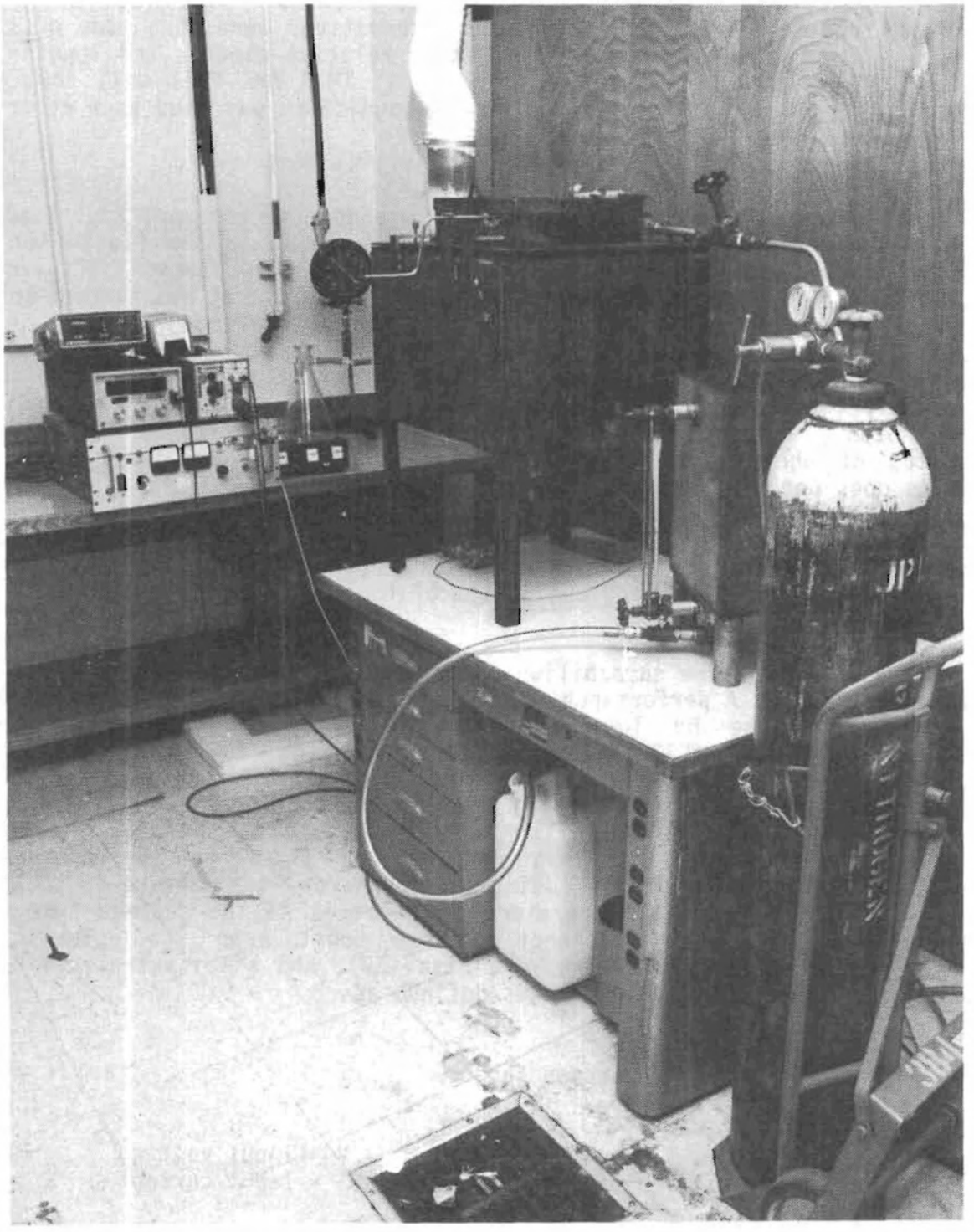

Figure 4. LOW TEMPERATURE PUMPING FACILITY

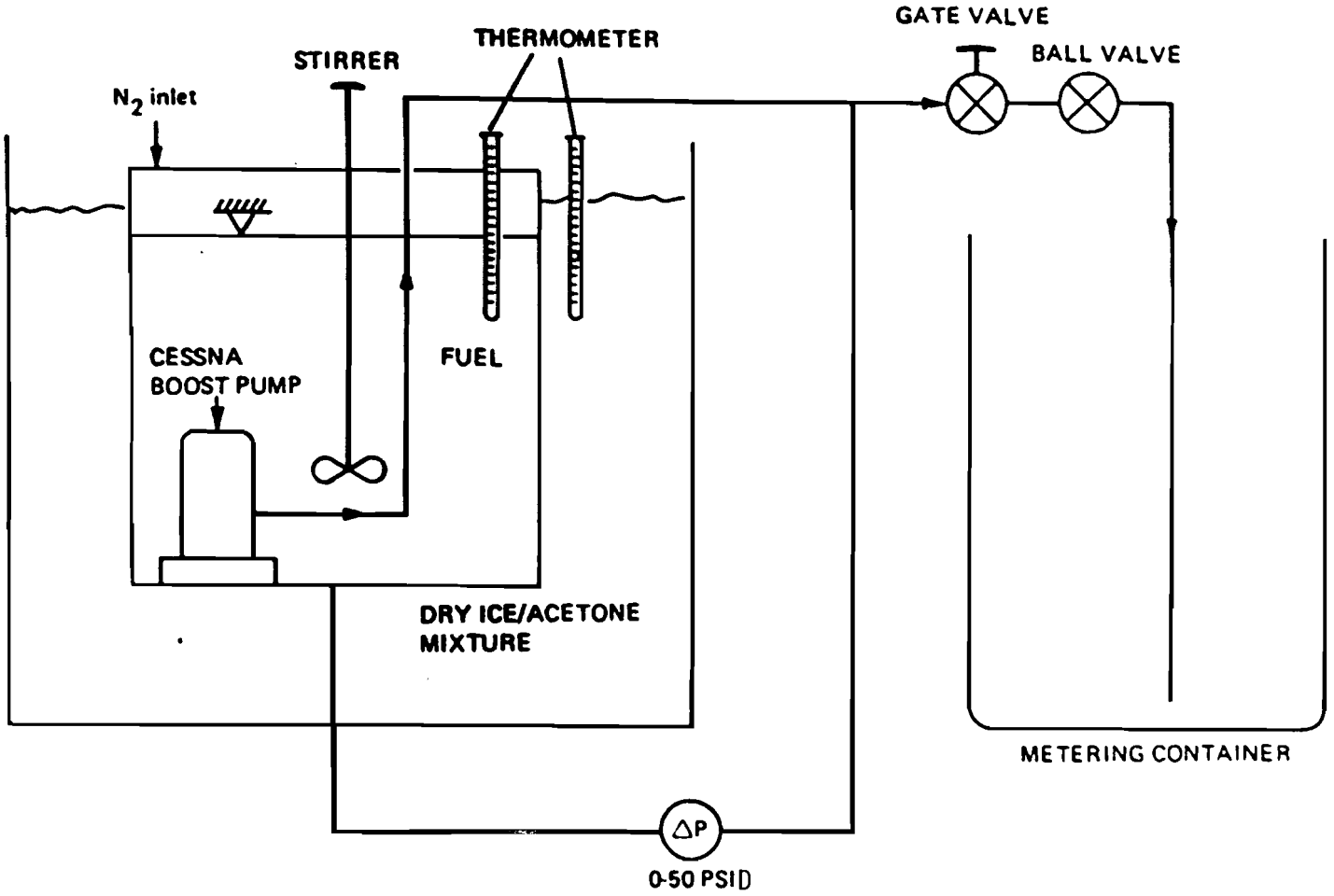

Figure 5. SCHEMATIC OF AMK PUMPABILITY TEST APPARATUS

FAA WJH Technical Center
00090647

A. Maximum flow rate in GPM delivered by the pump at 10 psi.

B. Decrease in delivery pressure in psi associated with an incremental increase in flow rate (see the slope in Figure 6).

In addition to the above test the low temperature behavior of AMK was characterized using JPL's aircraft wing tank environmental simulator (Figure 7). The test tank size is 50 gallons and represents a cross-section of an aircraft outer wing tank. The tank is equipped with heat exchangers on the top and bottom wall and can operate at temperatures from -55 to +40°C. The procedure for conducting the test involved loading the tank with fuel and then by controlling the temperature on the upper and lower walls; to lower the fuel bulk temperature to the desired level. The fuel was held at the temperature for a predetermined time and then gravity discharged from the tank to determine the fraction of holdup or frozen, unpumpable fuel. The percent holdup at various temperatures for AMK was compared with the data obtained for Jet A fuel (used to blend AMK) under the same condition. Detailed description of the apparatus and the testing procedures can be found in Reference 8. Because of the complexity, the test was performed only for two batches of slurry.

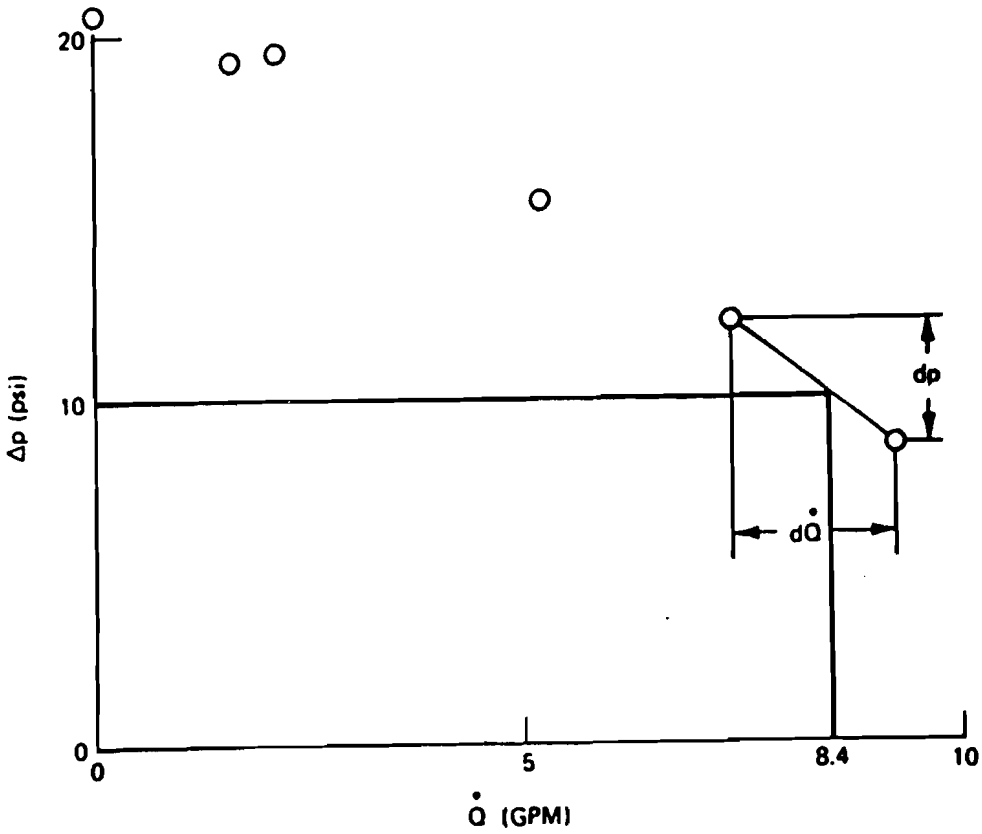

Figure 6. PUMPABILITY CRITERION FOR AMK FUEL

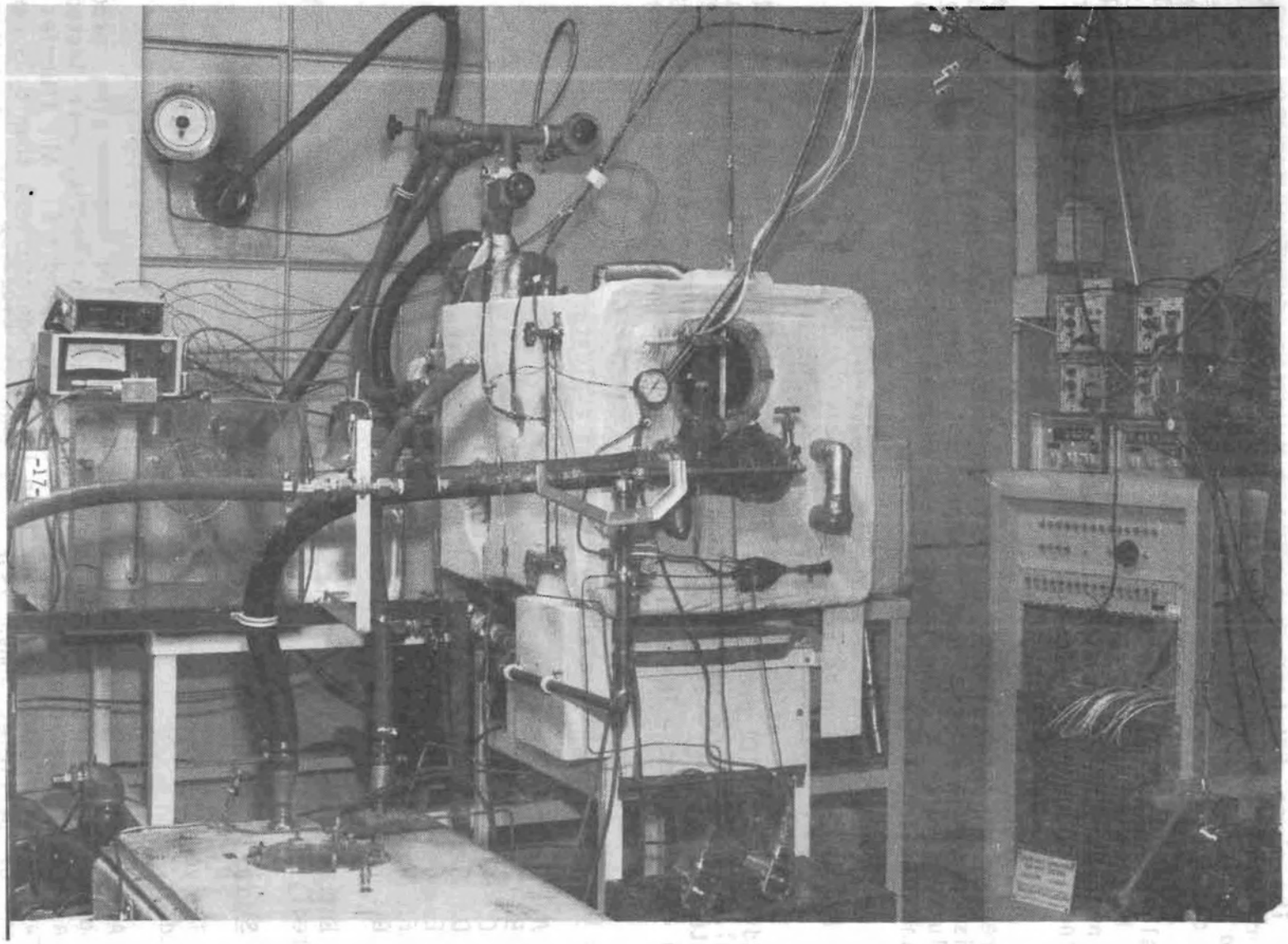

Figure 7. AIRCRAFT WING TANK ENVIRONMENTAL SIMULATOR

2.2.8 Slurry Preparation and Characterization

The slurry batches were prepared by ICI as a 25 percent by weight FM-9 polymer powder in a carrier fluid. The size of the shipments varied from 5 to 40 lb and were received in 5-gallon plastic containers. The slurries were used at least one week after arrival at JPL. The slurries were first homogenized by using a stirrer with an overhead motor and then passed through a "Tyler" equivalent 14-mesh sieve to remove any large agglomerates or foreign matter. The large batches of slurry were then divided and stored in one-gallon plastic containers. Prior to blending, the slurry was again homogenized by tumbling the containers for several hours on a rotary tumbler.

During the course of this program, a simple test procedure to determine the presence of large polymer particle agglomerates was developed. Description of this procedure is presented in Appendix F. Presence of such agglomerates in the slurry results in blending problems such as polymer settling, formation of gel, and plugging of the fuel lines.

3.0 EXPERIMENTAL RESULTS AND DISCUSSIONS

The objective of this investigation was to characterize the improved FM-9 AMK additive using ICI prepared equilibrated AMK (see Appendix A) as the baseline control. Preliminary development batches of this additive were previously characterized at JPL. Five lots of this additive were received as powders and one in a slurry form. The results of their evaluation can be found in Reference 9.

The order in which a slurry batch was evaluated was as follows:

A. Slurry properties
B. Blending (single stage)
C. Fire suppression capabilities
D. Degradability (combustion and filtrability)
E. Unintentional degradation
F. Water reaction and low temperature behavior
G. Pumpability

Batches which failed one of the evaluation steps were not further evaluated.

3.1 Slurry Properties

Twelve (12) FM-9 slurries were evaluated in the order of which they were received at JPL.

All the slurries from the various batches, after homogenizing, produced thick, but free flowing, homogeneous liquids. Random slurries were tested for presence of large particles using the procedure in Appendix F. All slurries were practically free of particles larger than 100μ and one had less than 0.05 percent by weight of particles above 75μ. In several blending runs no pumping or blending problems were encountered. The only problem area observed (for all of the slurry lots) was the tendency to settle with time in storage. This resulted in the formation of a clear liquid phase on top and relatively hard layer of

solids at the bottom of the storage containers. This slurry settling rate was not determined but it was noticed that it began almost immediately on storage and a thin film of clear liquid appeared within 48 hours. The liquid on top, in the case of one slurry was decanted and measured. A 40 lb quantity of slurry produced 6 lb of clear liquid on top in 6 months of storage.

The viscosity of these slurries ranged from 6000 to 15168 centipoise.

3.2 Blending and Fire Suppression Capabilities

AMK blended with these slurries and the subsequent testing of fire suppression characteristics was done as described in Section 2.2.1 and 2.2.3 of this report. The blending and the fire test were done at ambient temperature which varied from 10°C to 27°C depending upon the time of the year.

Besides the fire test, the blending properties of the slurries were evaluated by the filter ratio, the cup test and by following the turbidity of the AMK fuel with time. For the large scale runs the gum content (percentage solids) of the blended fuel was also determined.

The evaluation of the FM-9 slurries are presented in the table 2 and 3. The numbers in parentheses are the air velocity, (in knots) at which the fire tests were run.

TABLE 2. EVALUATION OF FM-9 SLURRY

SLURRY LOT	FIRE TEST (FT) AT 120 KNOTS	FILTER RATIO (FR)	CUP TEST (CT) IN CC
JCK 14-125	FT^{60} = MAR-FAIL		CT^{60} = 2.2
JCK 14-125		FR^{40} = 44.8	CT^{20} = 2.9 CT^{30} = 2.7
JCK 14-125	FT^{15} = FAIL FT^{20} = FAIL FT = PASS		
RMH 1-242	FT = PASS MAR (130) FT = FAIL (140)	FR = 33	CT = 3.3
JCK 14-125 JCK 14-125	FT^{20} = FAIL FT^{15} = FAIL FT^{17} = FAIL		

Note 1: superscripts indicate time after blending in minutes.
Note 2: absence of superscript indicates that the data is for equilibrated AMK.
Note 3: Base Fuel: RMH 30328

TABLE 3. EVALUATION OF FM-9 SLURRY (RMH 30328 BASE FUEL)

SLURRY LOT	FIRE TEST (FT) AT 120 KNOTS	FILTER RATIO (FR)	CUP TEST (CT) IN CC
JCK 14-163-3	FT^{20} = FAIL FT^{15} = FAIL		
RMH 1-242	FT = PASS FT = MAR (130)		CT = 3.5, 3.5
JCK 14-163-3	FT^{30} = MAR	FR^{50} = 49.0	CT^{10} = 3.2 CT^{15} = 2.7, CT^{40} = 2.4
JCK 14-163-3	FT^{65} = PASS (120 at 10°C) FT^{30} = PASS (120 at 10°C)		
JCK 14-163-3	$FT^{20\ HRS}$ = MAR		CT^{70} = 2.2 $CT^{24\ HRS}$ = 2.0
JCK 14-163-3	FT^{20} = FAIL FT^{30} = MAR $FT^{20\ HRS}$ = MAR FT^{44} = FAIL (130) FT^{60} = MAR-FAIL (130)		

Note: Superscript indicates time after blending in minutes

TABLE 4. EVALUATION OF FIRE PROTECTION CHARACTERISTICS BY FCTA

AIR VELOCITY m/sec	SETTING FUEL FLOW RATE	RMH 1-241	RMH 1-242	JCK 14 -125	JCK 14 -162-3	JCK 13 -195	JCK 13 -196	JCK 13 -197	TIME AFTER BLENDING
70	650 (18 ml/sec)	F/F	F/F	F/F	F/F	F/F	F/F	F/F	15
70	450 (14 ml/sec)	M/M	M/M	F/F	F/F	MP/F	M/M	M/M	
70	650 (18 ml/sec)	-	-	M/M	M/M	M/F	M/M	MP/MP	60
70	450 (18 ml/sec	-	-	M/M	M/M	M/M	M/M	M/M	
70	650 (18 ml/sec)	-	-	M/M	M/M	MF/MP	M/M	M/M	Equilib-rated
70	450 (14 ml/sec)	-	-	M/M	M/M	M/M	M/M	M/M	
60	575	-	-	-	M/F	-	-	-	15
60	450	-	-	-	F/F	-	-	-	
60	575	-	-	-	M/M	-	-	-	60
60	450	-	-	-	M/M	-	-	-	

M - Marginal; F - Fail; MP - Marginal Pass
Note: Repeat results shown.

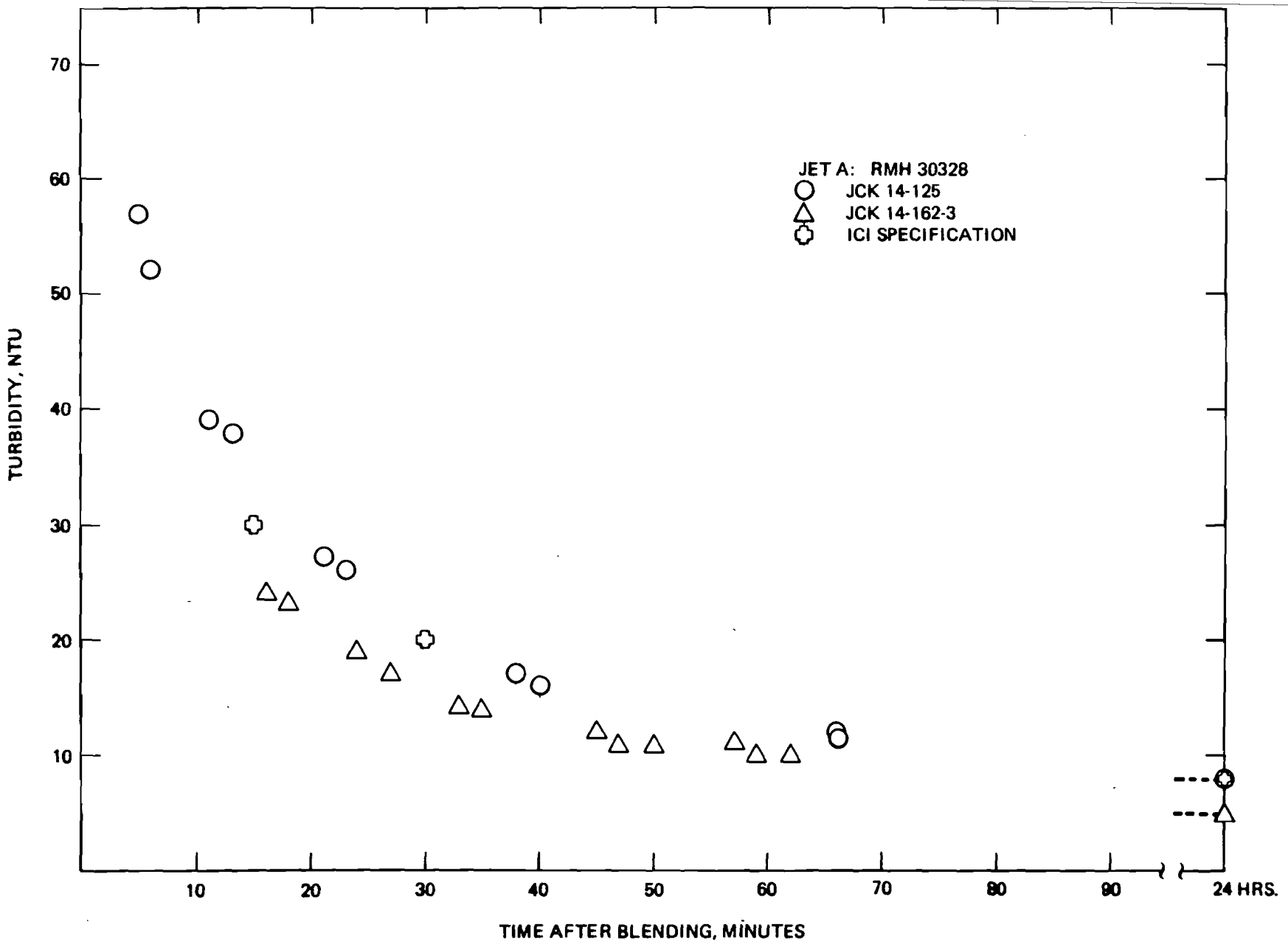

Figure 8. MONITORING OF AMK FUEL DEVELOPMENT WITH TURBIDIMETER

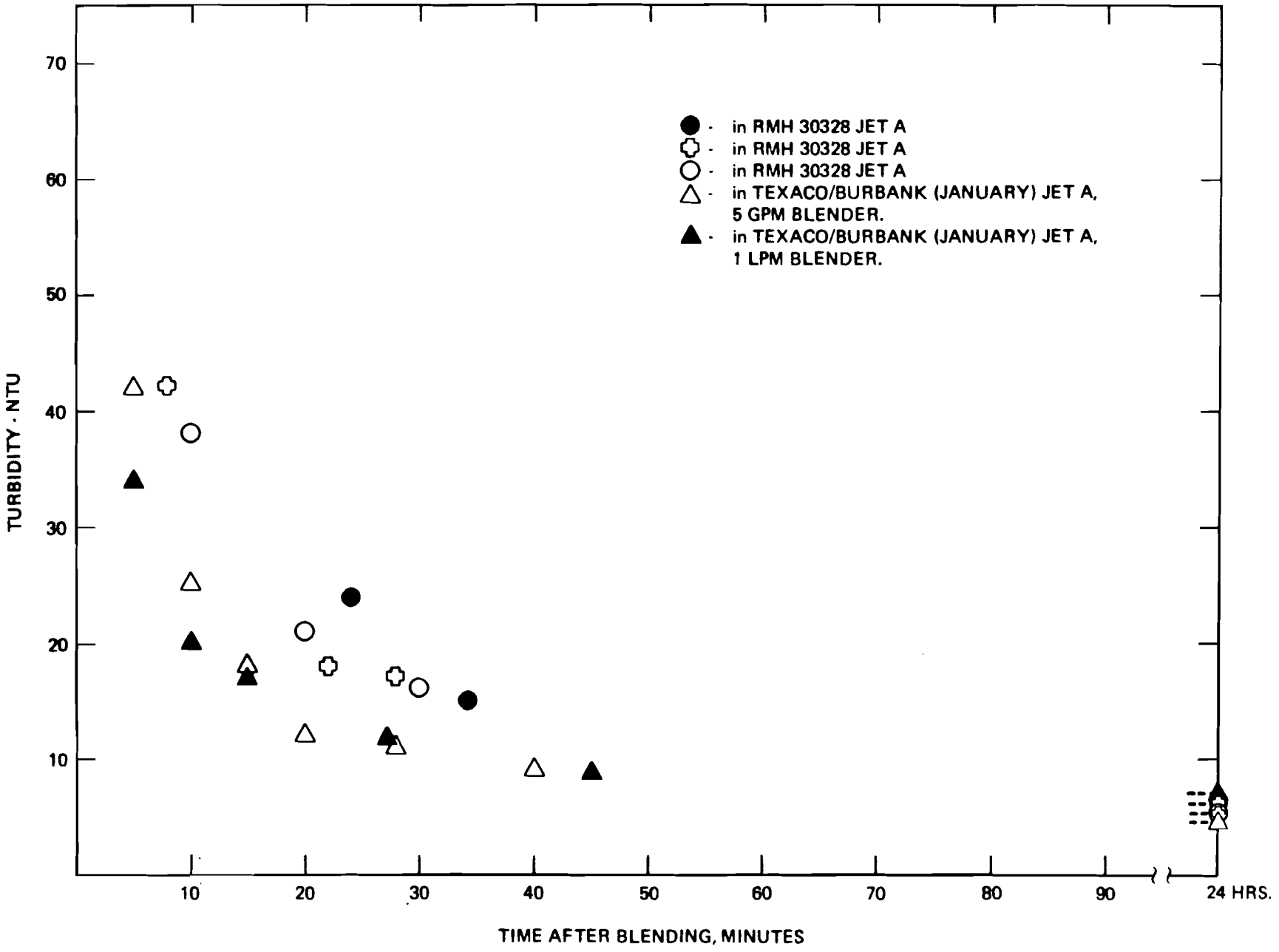

Figure 9. MONITORING OF JCK 14-247-2 SLURRY BLENDING WITH TURBIDIMETER

TABLE 5. EVALUATION OF FM-9 SLURRY

SLURRY LOT AND BASE FUEL	FIRE TEST (FT) AT (KNOTS)	FILTER RATIO TEST (FR)	CUP TEST (CT) IN C.C.
JCK 14-247-2 RMH 30328 (●-in Fig. 9)	FT^{20} = PASS (120) FT^{20} = PASS (130) FT^{20} = MARG (140)	FR^{24} HRS = 52	CT^{30} = 2.0
JCK 14-247-2 RMH 30328 (O-in Fig. 9)	FT^{50} = PASS (140)		CT^{24} = 2.05
JCK 14-247-2 TEX/BUR JET-A (January) (△-in Fig. 9) 56 PM Blender	FT^{20} = MAR (130) FT^{28} = PASS (130)	FT^{6} HRS = 60	CT^{25} = 2.6 CT^{40} = 2.5 CT^{5} HRS = 2.3 CT^{24} HRS = 2.4
REPEAT AS ABOVE (▲-in Fig. 9) 1 LPG Blender	FT^{30} = PASS (130)		CT^{28} = 2.4 CT^{45} = 2.2
1-23-84 RMH 1-246 CONTROL AMK Equilibrated	FT = PASS (120)		CT = 3.8
2-9-84 RMH 1-246 CONTROL AMK Equilibrated	FT = PASS (130)		

Additional fire tests not presented in Table 3 indicated that even when equilibrated, the rating of this material at 120 knots was marginal at the most.

The fire test results for JCK 13-195, 196 and 197 of Table 4 slurries were similar to JCK 14-163-3. All three slurries got a "fail" rating at 120 knots, 15 to 20 minuts after blending and all got "pass" ratings at the same test conditions after equilibrating for 24 hours.

Because of the poor performance of these additive slurries the fire protection characteristics were double checked by FCTA test. The data presented in Table 4 confirmed the marginal fire protection properties of these batches. With the exception of some turbidity measurements presented in Figure 8 further evaluation of these batches was discontinued.

The evaluation of the FM-9 additive continued with lot JCK 14-247. It was marked lot 1 and 2, since it came in two pails (40 lb quantity each). It was considered the "final slurry lot" and was received in larger than the usual quantity to allow for large scale testing, e.g., blending, degradation and low temperature characterization.

Part of the data for this slurry is presented in Table 5 and Figure 9. It was found that filter ratio, cup and turbidity test values were about the same as the previously characterized slurries but the fire protection capability was significantly improved. These results were confirmed by data from larger blending runs (5-10 GPM blender) which also indicated good fire protection characteristics. Based on these results this AMK batch was further characterized for its degradability, pumpability and low temperature properties. These results are presented in Sections 3.3 through 3.6 of this report.

The JCK 14-247 slurry properties were evaluated again to compare them with newer batches of slurry additive which were received at JPL in July and later in November 1984.

The results presented in Table 6 and Figure 10 indicated partial deterioration of the flammability protection in comparison to the result obtained about 6 months earlier. The same slurry batch was tested again in November and the fire test results were the same as in January 1984. The ambient fuel temperatures in January and November were found to be about 10 to 15°C lower than those in July and August. These results demonstrate the influence fuel temperature had on AMK flammability characteristics. Fuels with "marginal" properties may pass the fire test at fuel temperatures of 10 to 15°C and get a marginal to fail rating at 22 to 25°C. Slurries which were rated as "good" when blended yield AMK which would get a "pass" rating in the entire range from 10 to about 30°C. At about 30°C fuel temperature even for these slurries, the fire test results become marginal and above 33°C they all fail the fire test. The data on two such slurries is given at the end of Table 5 as lot JCK 16-88-3 and JCK 16-95-1.

3.3 Degradability

The intentional degradability (restoration of base fuel properties) was assessed as described in Section 2.2.4. The results from the Hamilton blender degradation test and the subsequent characterization of the samples by the filter ratio test are presented in Table 7. Most of the work in this area was done

TABLE 6. EVALUATION OF FM-9 SLURRIES

SLURRY LOT AND BASE FUEL	FIRE TEST (FT) AT (KNOTS)	FILTER RATIO (FR) TEST	CUP TEST (CT) IN C.C.
JCK 14-247-1 IN TEX/BURB JULY JET A 5 GPM BLENDER 0.28% SOLIDS	FT^{25} = FAIL (130) AT 26°C $FT^{24\ HRS}$ = PASS (130) AT 21°C	FR^{40} = 49 $FT^{9\ DAYS}$ = 53	CT^{18} = 3, CT^{30} = 2.3 CT^{22} = 2.5 $CT^{9\ DAYS}$ = 2.2
JCK 16-88-3 IN TEX/BURB AUGUST JET A	FT^{25} = PASS-MAR (130) AT 28°C		
AS ABOVE IN JULY JET A	FT^{30} = PASS (130) AT 22°C		
JCK 14-247-1 IN TEX/BURB AUGUST JET A 5 GPM BLENDER 0.31% SOLIDS (-in Fig. 10)	FT^{20} = MAR-FAIL (130) AT 22°C $FT^{6\ HRS}$ = PASS (15°C) (130)	FR^{60} = 56	CT^{60} = 1.95
JCK 16-88-3 IN TEX/BURB AUGUST JET A 5 GPM BLENDER 0.31% Solids	FT^{15} = FAIL (130) FT^{60} = PASS (130) ALL AT 24°C FT^{100} = PASS (130) AT 25°C FT^{80} = MARG (130) AT 31°C FT^{110} = FAIL (130) AT 33°C $FT^{8\ DAYS}$ = PASS (130) AT 25.5°C	$FR^{4\ HRS}$=80.5	CT^{40} = 2.1 $CT^{24\ HRS}$ = 1.9
MIAMI SLURRY MOJAVE BLEND GE BLEND 0.31% Solids	$FT^{48\ HRS}$ = PASS (130)	$FR^{34\ HRS}$=63	$CT^{34\ HRS}$ = 2.0

TABLE 6. EVALUATION OF FM-9 SLURRIES (CONT'D.)

SLURRY LOT AND BASE FUEL	FIRE TEST (FT) AT (KNOTS)	FILTER RATIO (FR) TEST	CUP TEST (CT) IN C.C.
JCK 16-95-2 TEX/BURB (AUGUST) JET A TEX/BUR (SEPT) JET A 1LPM AND 5 GPM BLENDERS	FT^{30} = PASS (130) (15-25°C) FT = PASS (130) (15-31°C) - - - - - - - - - - - FT = PASS (160) AT 25°C	FR = 85±3	CT = 1.8 ± 0.1
JCK 16-98-1 IN TEX/BUR(AUGUST) JET A TEX/BUR SEPT JET A 1 LPM RUNS	FT^{30} = MAR-FAIL (130) (20-25°C) FT = MAR-PASS (130) (20-25°C)	FR^{60} = 40±3	CT^{50} = 2.6 ± 0.2
JCK 14-247-2 IN TEX/BUR AUGUST JET A	FT = PASS (130) 15°C FT = PASS (130) 24°C	-	-
REPEAT ABOVE WITH CID JET A	FT = PASS (130) 15°C FT = PASS (130) 25°C	-	-
CID COMPOSITE SLURRY IN CID JET A, 1 LPM BLENDER	FT^{30} = PASS (130) 18°C FT^{60} = PASS (160) 18°C $FT^{3\ DAYS}$ = (160) 18°C	FR^{60} = 55 $FR^{3\ DAYS}$=70.0	CT^{45} = 2.0 $CT^{3\ DAYS}$ = 1.9
AS ABOVE 5 GPM IN TEX/BURB (NOV.) JET A 0.296% SOLIDS	FT^{30} = PASS (130) 20°C	FR^{50} = 52 FR^{120} = 63 FR^{24} HOURS = 75.4	CT^{120} = 1.9 $CT^{24\ HRS}$ = 1.9

Note: Solids were not determined for each blend unless stated.

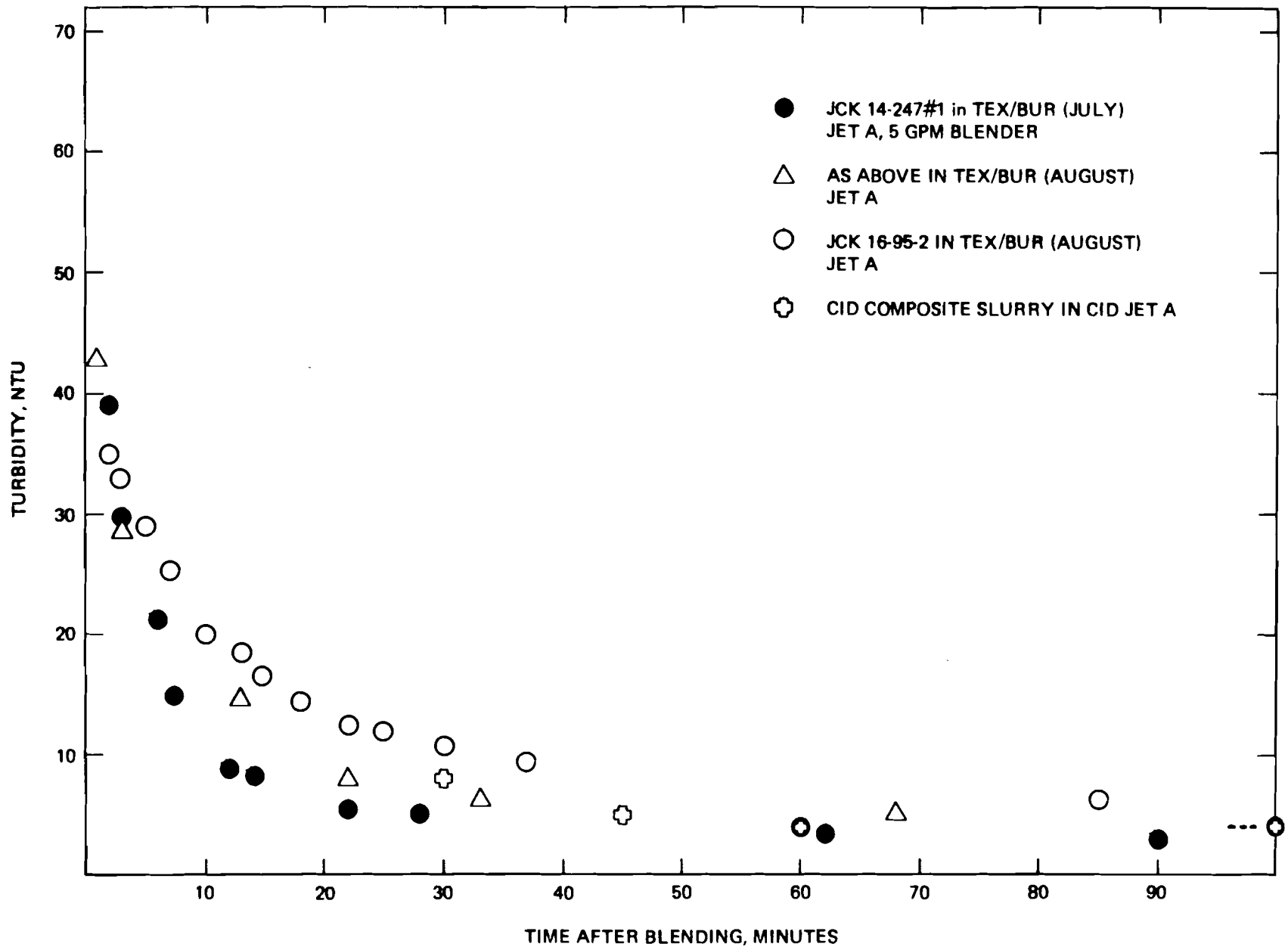

Figure 10. MONITORING OF AMK BLENDING WITH TURBIDIMETER

using the JCK 14-247-2 slurry. With the exception of JCK 14-125 which showed a marginal degradability, the rest of the samples had good degradability.

The AMK degradability was also evaluated using a continuous flow single pass degrader which utilized pressure drop across the needle valve to degrade the fuel. The quality of the degraded fuel was evaluated in terms of its filterability. The description of the degrader, all the details of the test procedure and the test results are the subject of a separate report (Reference 7) and are summarized below.

The following samples were evaluated:

- JCK 14-247-2 AMK, freshly blended (20 minutes) or equilibrated.
- AMK blended in Miami (Florida); Convair-880 wing tank test sample from Mojave Airport; equilibrated
- AMK blended at Mojave Airport, Lot #7-5-84 tests equilibrated for 35 hours
- JCK 16-98-1 AMK
- JCK 16-95-2 AMK
- JCK 16-88-3 AMK equilibrated for 48 hours
- ICI Equilibrated AMK, Lot #RMH 1-241
- JCK 14-247-2 AMK, equilibrated for 6 hours and degraded at -22°C

With the exception of the last sample, the AMK fuel samples were successfully degraded without any filter plugging problems. The pressure drop across the filter was approximately 10 to 15 percent higher than Jet A fuel with degrader power requirement of 27.6 kw-s/liter (2.335 HP/GPM).

The filter ratio of the degraded samples were in the 1.1 to 1.3 range when measured 1 to 2 minutes after degradation. For equilibrated and then degraded AMK the filter ratio remained in that range. Filter ratio slowly increased with time to 10, 15, or in some cases even higher for freshly blended and degraded AMK samples.

The sample of AMK fuel which was degraded at -22°C gradually plugged the filter and the rate of plugging was 3.3 psi/minute. After modification of the degrader and with the introduction of a bypass loop the degrader performance markedly improved, enabling filtration of even low-temperature, freshly-blended and then degraded AMK fuel. (For further details of these findings, see Reference 7).

3.4 Unintentional Degradation

As previously indicated the unintentional degradation of the AMK fuel was evaluated by exposing the various samples to the same mechanical shear (one pass through the 1 liter per minute (LPM) Kenics blender) and then comparing the degree of partial degradation by filter ratio or fire test. The resistance to degradation of ICI blended equilibrated FM-9 AMK under these conditions has been the baseline control when evaluating the unintentional degradability of the various AMK batches. Past work done by FAA, JPL and Douglas Aircraft Company indicated that for FM-9 AMK fuel, an acceptable level of unintentional degradation in the wing tank as measured by filter ratio should be in the 15 to 20 range. One pass through the 1 LPM blender produced partially degraded fuel with filter ratio in that range. Due to limitation of funds and time

TABLE 7. DEGRADABILITY OF FM-9 AMK FUELS

SLURRY LOT	FILTER RATIO (FR), CUP TEST (CT) OR NTU BEFORE DEGRADATION	DEGRADED FILTER RATIO FRd
JCK 14-125 in RMH 30328 Jet A	FR^{20} = 44.8, NTU^{40} = 16 CT^{30} = 2.7	FR_d^{35} = 7.75
JCK 14-247-2 in RMH 30328 Jet A	$FR^{24\ HRS}$ = 52, $NTU^{24\ HRS}$ = 5.8 $CT^{24\ HRS}$ = 2.0	$FR_d^{24\ HRS}$ = 3.27
JCK 14-247-2 5 GPM Blender in Tex/ Burb. January Jet A	$FR^{6\ HRS}$ = 60, $NTU^{5\ HRS}$ = 6.2 $CT^{5\ HRS}$ = 2.3	$FR_d^{5\ HRS}$ = 3.4
JCK 14-247-2 in Tex/Burb. January Jet A	FR^{55} = 50.1, NTU^{45} = 8.6 CT^{45} = 2.2	FR_d^{60} = 4.5
Control, RMH 1-246	CT = 3.3	FR_d = 2.9
JCK 14-88-3 in Tex/Burb. July Jet A	FR = 80.5, NTU = 3.5 CT = 2.0	FR_d = 4.1
JCK 14-247-1 , 0.28% in Tex/Burb July Jet A 5 GPM Blend	FR = 53, NTU = 4 CT = 2.2	FR_d = 4.27
JCK 14-247-1, 0.31% as above	FR^{60} = 56, NTU^{60} = 5.0 CT^{60} = 1.95	FR_d^{60} = 4.4
Miami Slurry GE Blend in Mojave	$FR^{34\ HRS}$ = 63 $CT^{34\ HRS}$ = 2.0	$FR_d^{34\ HRS}$ = 1.08 (5-10 hrs later) $FR_d^{34\ HRS}$ = 1.16 (4 hrs later) $FR_d^{34\ HRS}$ = 1.27 (20 hrs later)
JCK 16-88-3, Tex/Burb. (July) Jet A, equilibrated	FR = 80.5, CT = 2.0, NTU = 3.5	FR_d = 4.1
JCK 14-247, Tex/Burb. (July) Jet A, 0.28% solids	FR = 53, CT = 2.2 NTU = 3.45	FR_d = 4.27
JCK 14-247 0.31% in Tex/Burb. (Aug.) Jet A	FR^{60} = 56, CT^{60} = 1.95 NTU^{60} = 5.0	FR_d^{60} = 4.4

constraints, solid contents of each blend was not determined.

In the case of the improved FM-9 AMK only two batches were tested for unintentional degradability and at the time of the experiment the ICI blended FM-9 AMK fuel was not available for comparison purposes. After one pass through the Kenics blender the fuel has higher filter ratios than FM-9 but failed the fire test, indicating excessive degradation. The data for the two batches is presented below in Table 8 and the JCK 14-247-1 data is not representative since the fuel is marginal even before degradation.

TABLE 8. UNINTENTIONAL DEGRADABILITY OF FM-9

SLURRY LOT	FILTER RATIO (FR), CUP TEST (CT), FIRE TEST (FT) BEFORE DEGRADATION	CUP TEST, FILTER RATIO, AFTER KENICS DEGRADATION	FIRE TEST
JCK 14-247-1, 0.28% in Tex/ Burb., (JULY) Jet A, 5 GPM Blend	FR = 53 FT = Marginal CT = 2.2 FT = Mar/pass (23°C) FT = Fail (27°C)	One Pass FR = 27.1 CT = 3.1	Fail (27°C)
JCK 16-88-3 in Tex/Burb., (July,) Jet A, 6 GPM Blend	FT = pass (130) FR = 80.5 CT = 1.9 FT = Pass (25°C)	One Pass FR = 32 CT = 2.7	Mar-Fail (25°C)
JCK 16-95-2 in Tex/Burb. in (Sept.), Jet A	FT = Pass (130) FR = 85 CT = 1.8	One Pass	FT = Mar (120) FT = Mar-Fail(130) FT = Fail (140)

In view of these results and the change in the equilibrated filter ratio range from 45 ±5 for FM-9 to 85 ±5 for the improved FM-9, the 15 to 20 filter ratio range for acceptable unintentional level of degradation cannot be valid. The unintentional degradation in the aircraft fuel system depends on the degradability of AMK fuel and needs to be determined for this FM-9 variant. The only data which gave some information in this area was the characterization of AMK fuels from the Convair 880 wing tank. This fuel was blended at the FAA Technical Center, Atlantic City Airport, New Jersey, and flown to Mojave Airport in California with a stopover in Cincinnati, Ohio. The data for this fuel is as follows:

ATLANTIC CITY*	CINCINNATI SAMPLE	MOJAVE AIRPORT SAMPLE
FR = 46.3 CT = 2.4 NTU = 17.2	FR = 33.1 CT = 2.75 NTU = 7.2 FT = Pass (130)	FR = 36.6 CT = 2.8 NTU = 7.0 FT = Mar-Pass (130)

*FAA tests 3 days after blending

3.5 Water Reaction and Low Temperature Behavior

The investigation of AMK fuel with water vapor at the fuel/water vapor interface was done following the procedure in Section 2.2.6. The tests were performed using AMK fuel prepared from JCK 14-247-2 slurry. No difference in the behavior of this AMK fuel as compared to FM-9 fuel were observed. The same batch of AMK fuel was used for evaluation of the low temperature behavior. The test procedure can be found in Section 2.2.7. No presence of gel on top of the 4-mesh stainless steel screen was detected after one gallon of AMK fuel at -25°C was poured through the filter. In a similar experiment using the same batch of AMK, the content (50 gallons) of the low temperature wing simulator at -40°C was passed through the same size screen and again no gel on top of the screen was observed.

The same fuel when tested for flammability at -35°C fuel temperature retained its fire protecting capability at 130 knots air velocity.

As previously indicated (Section 2.2.7) the low temperature behavior of FM-9 AMK fuel was extensively evaluated using JPL'S aircraft wing tank environmental simulator (Figure 7). The low temperature characteristics (percent holdup) of JCK 14-247-2 AMK fuel under these conditions was compared to the characteristics of Jet A and ICI blended equilibrated AMK. For further details see Reference 8. In summary, these results indicated that under these test conditions the differences between the holdup behavior of FM-9 equilibrated AMK fuel, Jet A and JCK 14-247-2 AMK fuels are insignificant.

3.6 Pumpability of FM-9 AMK Fuel

The pumpability of the improved FM-9 AMK fuel was evaluated following the test procedure and the pumpability criteria described in Section 2.2.7. These tests were performed in the Cessna Boost Pump Rig. The AMK fuel used in these tests was prepared using JCK 14-247-1 slurry and was evaluated at two temperatures (22°C $\pm$1°C and -25°C $\pm$1°C). The data is presented in Figure 11 for JCK 14-247-1 AMK and Figures 12 and 13 for ICI equilibrated AMK and for Jet A. Because of the significant pumpability loss observed with this AMK fuel the tests were repeated using AMK made from slurry lot JCK 16-95. The results in Figure 14 indicate even higher pumpability loss when compared to JCK 14-247 AMK.

Finally, the pumpability performance of the improved FM-9 AMK fuel was evaluated using a full-scale DC-10 boost pump. Due to the complexity and the large amount of fuel required, this test was done on only one slurry batch (CID composite). This particular batch was selected because it "passed" all other tests, e.g., blending, fire test, degradability, etc.

The DC-10 boost pump was located inside JPL's wing tank environmental simulator (Figure 7). The pumpability test results are presented in Figure 15. The results indicated that the pumpability performance deterioration when switching from Jet A to AMK fuel was not as marked for the DC-10 boost pump as for the Cessna boost pump. This may be attributed to the differences in the pump design and size.

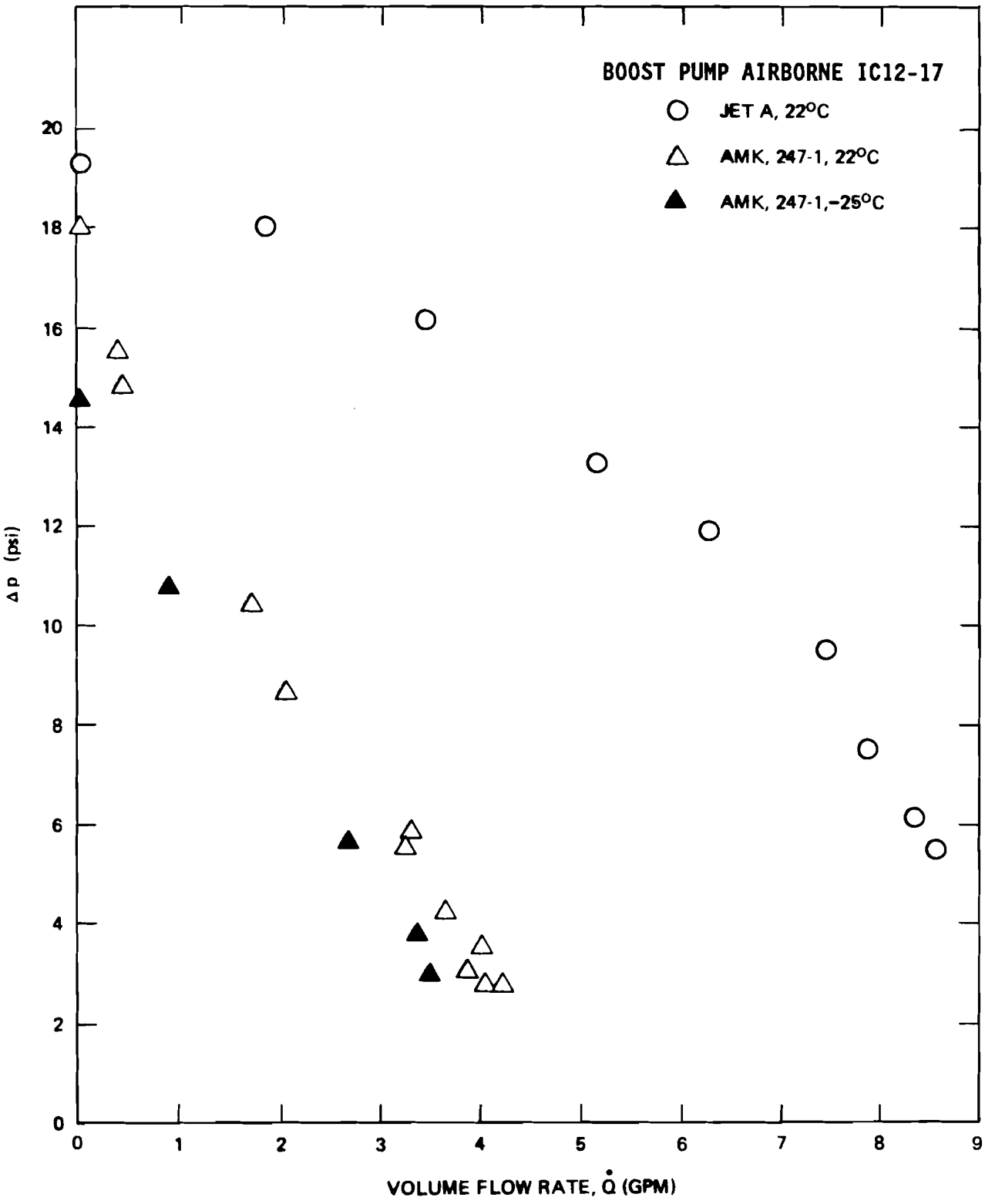

FIGURE 11. PUMPABILITY OF IMPROVED FM-9 AMK FUEL RELATIVE TO JET A AND AT COLD TEMPERATURES

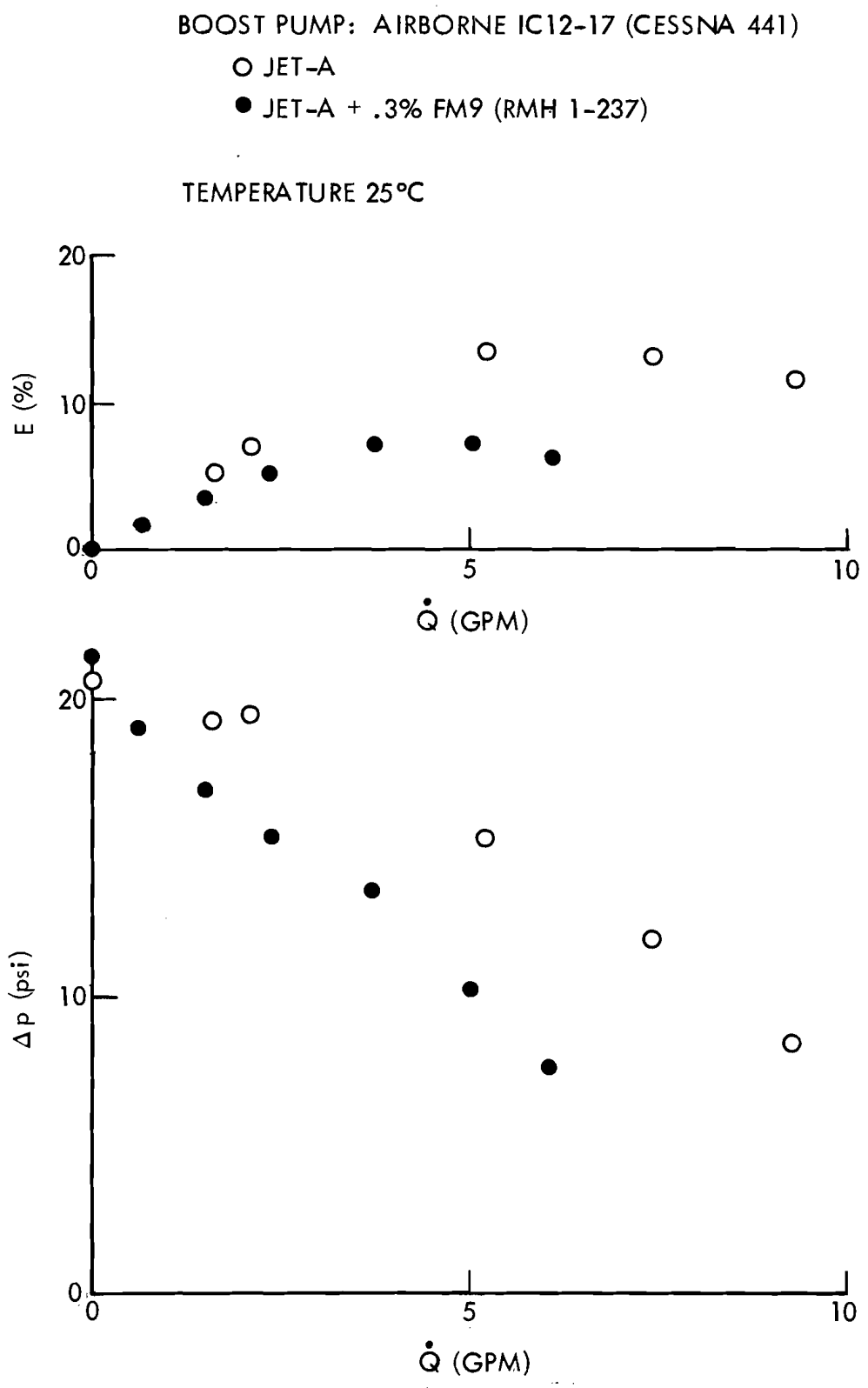

FIGURE 12. PUMPABILITY OF FM-9 AMK FUEL AT ROOM TEMPERATURE RELATIVE TO JET A USING CESSNA PUMP

BOOST PUMP: AIRBORNE IC12-17 (CESSNA 441)

O JET-A, T = -26°C

● JET-A + .3% FM9 (RMH 1-237, T = -30°)

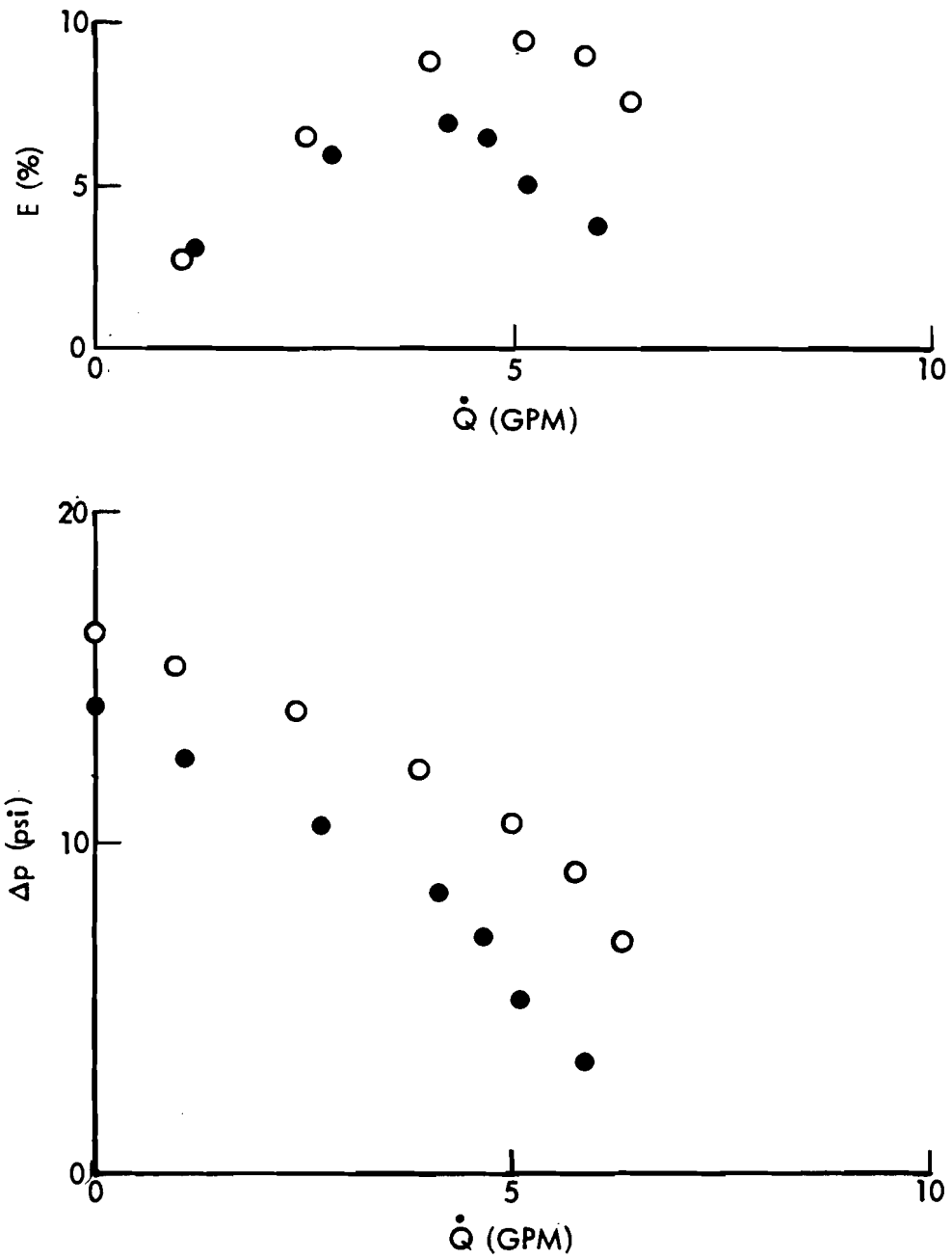

FIGURE 13. PUMPABILITY OF FM-9 AMK FUEL AT LOW TEMPERATURE RELATIVE TO JET A AT COLD TEMPERATURES USING CESSNA PUMP

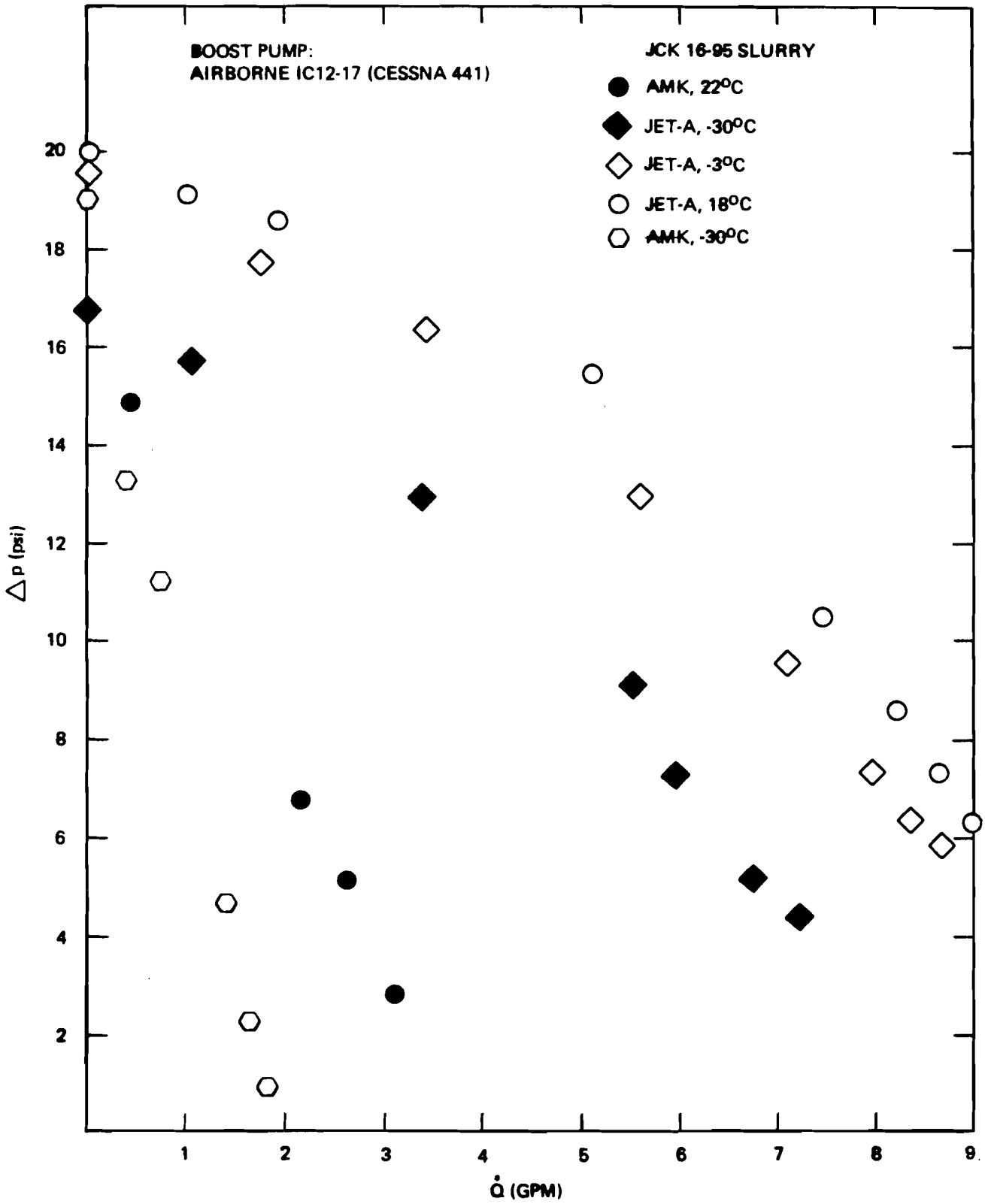

FIGURE 14. PUMPABILITY OF IMPROVED FM-9 AMK FUEL ALL TEMPERATURES USING CESSNA PUMP

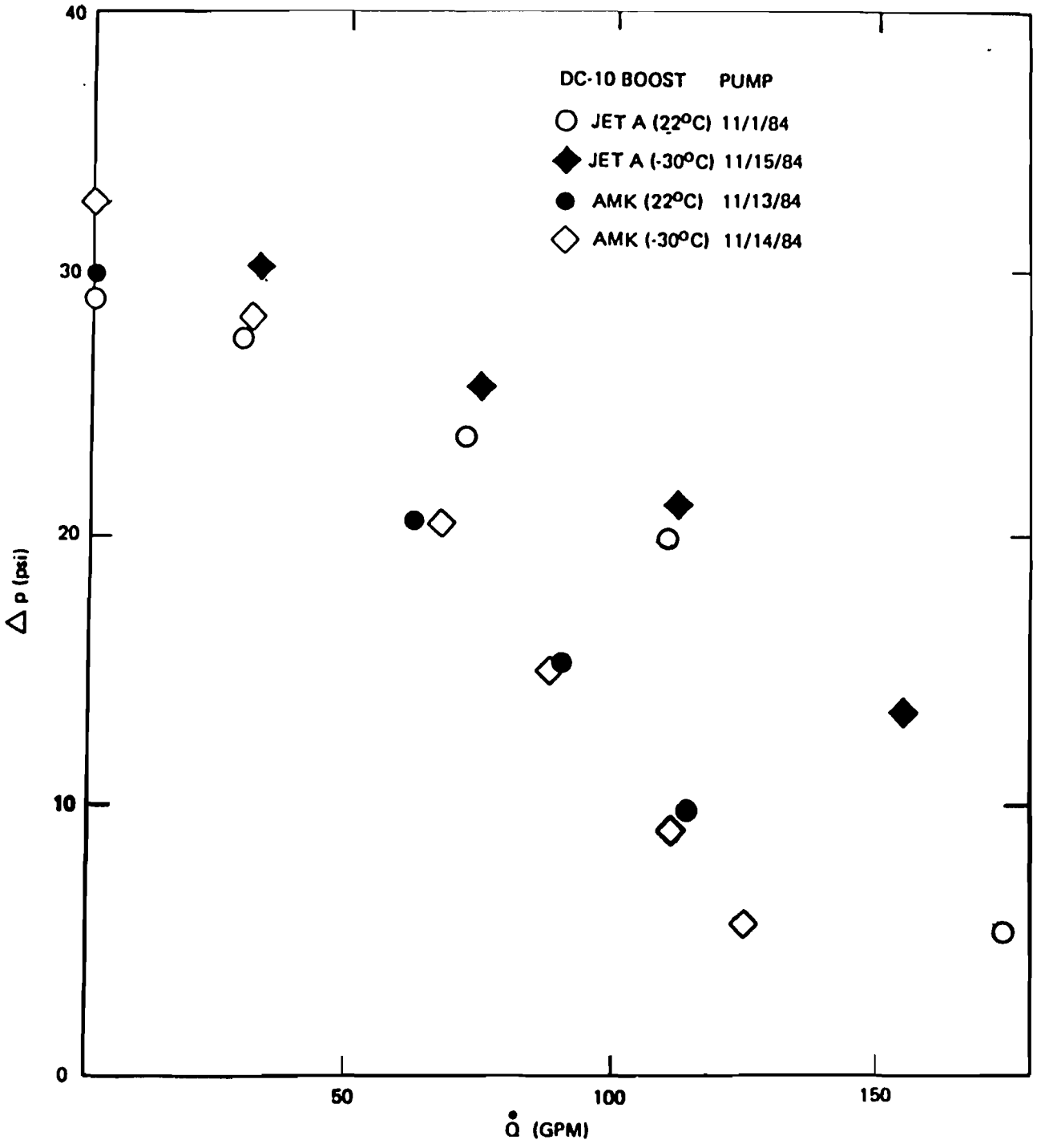

FIGURE 15. PUMPABILITY OF IMPROVED FM-9 AMK FUEL ALL TEMPERATURES USING DC-10 PUMP

4.0 CONCLUSIONS

The principal conclusions of this report are as follows:

1. Laboratory evaluation of the improved FM-9 slurry indicated that the quality of the slurry meets the metering and dispersion requirements for single state, in-line blending of AMK fuel.

2. The dissolution rate of the improved FM-9 additive in Jet A at ambient fuel temperatures (15-20° C) is sufficient, and produces AMK fuel with adequate fire suppression characteristics within 30 minutes after blending.

3. Evaluation of the intentional degradability of the improved FM-9 AMK using degrader/filterability apparatus indicated that freshly blended fuel can be degraded without difficulty and with a specific power requirement of less than 30 $kWsL^{-1}$.

4. The interaction of the improved FM-9 AMK fuel with bulk or vapor condensed water is similar to the reaction of FM-9 AMK fuel with water. Contamination with large amounts of bulk water leads to formation of gelled emulsion on the interface. The water vapor condensation of AMK surfaces produced a string-like second phase that redesolves when pumped or heated.

5. The low temperture evaluation tests indicated that the fuel holdup behavior of the improved FM-9 AMK is similar to that of Jet A and FM-9 AMK. The evaluation also indicated that there were no phase separation and gel formation problems at low temperature.

6. Significant loss in pumpability performance with the improved FM-9 AMK was observed at both room and low temperature using the Cessna 441 boost pump. However, the deterioration of pumpability performance was not as significant with AMK as compared with Jet A using the DC-10 boost pump.

REFERENCES

1. Klueg, E., 6th US/UK Technical Committee Meeting on Antimisting Fuels, 1980.

2. Timby, E., Wilford, S.P., RAE Report, 10th US/UK Technical Group Meeting, June 9, 1982, Atlantic City.

3. Yavrouian, A., Ernest, J., and Sarohia, V., "Antimisting Kerosene: Base Fuel Effects; Blending and Quality Control Techniques," FAA Report DOT/FAA/CT-83/36, February, 1984.

4. Parikh, P., Yavrouian, A., and Sarohia, V., "Antimisting Kerosene: Development of A Continuous 10GPM Inline Blender," FAA Report DOT/FAA/CT-85/12.

5. Eklund, T.I. and Neese, W.E., "Design of an Apparatus for Testing the Flammability of Fuel Sprays," FAA Report FAA-RD-7854 (1978).

6. Ferrara, A.M., "Laboratory Scale Testing of Modified Fuels," FAA Report, to be published.

7. Parikh, P., Yavrouian, A., and Sarohia, V., "Antimisting Kerosene: Low Temperature Degradation and Blending," FAA Report

8. Parikh, P., Yavrouian, A., and Sarohia, V., "Antimisting Kerosene: Evaluation of Low Temperature Performance," FAA Report DOT/FAA/CT-85/31.

9. Yavrouian, A., Parikh, P., Bernal, L., and Sarohia, V., "Antimisting Kerosene: Evaluation of FM-9 Variants," FAA Report DOT/FAA/CT-85-3.

APPENDIX A

BATCH-BLENDED AMK RECEIVED BY JPL
AMK-FM-9-0.30 PERCENT SOLIDS

LOT NUMBER	RMH 1-160	RMH 1-172	RMH 1-177	RMH 1-195	RMH 1-205	RMH 1-231	RMH 1-232	RMH 1-233
DATE SHIPPED	7/9/81	8/21/82	10/14/84	11/18/84	12/7/81	3/23/82	5/12/82	6/3/82
AMOUNT, LBS.	1980	990	660	330	330	330	330	2640
% SOLIDS	0.30	0.297	0.310	0.290	0.303	0.297	0.297	0.290
FLOW CUP ml/30 s	2.57	2.60	2.70	2.40	2.30	2.40	2.8	2.57
CLARITY	Clear	Clear	Clear	Clear	Clear	Clear	Clear	Clear
VISCOSITY @ 25°C	2.75	2.73	3.12	2.80	2.90	2.99	2.86	2.87
FILTER RATIO	N.A.	N.A.	59.2	44.0	48.2	67.0	51.0	38.5

LOT NUMBER	RMH 1-237	RMH 1-242	RMH 1-246
DATE SHIPPED	8/24/82	3/30/83	11/3/84
AMOUNT, LBS.	990	330	1320
% SOLIDS	0.30	0.290	0.31
FLOW CUP ml/30 s	2.5	2.30	1.95
CLARITY	Clear	Clear	Clear
VISCOSITY @ 25°C	2.91	3.01	3.13
FILTER RATIO	41.0	48.4	55.5

APPENDIX B

OPERATING PROCEDURE FOR FILTER RATIO TEST

Fuel temperatures for Jet A and AMK are 20 $\pm 1^{o}C$.

Apparatus: Filtration ratio apparatus as shown in Appendix C.

Type of filter used: 16-18 micron twilled Dutch weave stainless steel 165 x 1400 mesh cloth, warp diameter 0.07 mm and weft diameter 0.04 mm, pre-cut into discs of 44.5 mm diameter. The material is obtained from Tetco, Inc., 525 Monterey Pass Road, Monterey Park, CA 91754.

1. Make sure filter apparatus has been rinsed clean with Jet A and then drained. Residual AMK can influence the filter time of the next sample.

2. Place an unused filter on lower filter plate, positioning it in the center so that it overlaps the edge of the orifice.

3. Both 'O' rings should be properly seated. Align upper and lower filter plates the same way each time; attach lower to upper and apply screws, tightening them to the same tolerance each time.

4. Insert a rubber stopper in bottom orifice, choosing a size which does not contact the filter. Hold stopper steady until removal. Excess motion may induce gelation in the filter.

5. Tilt apparatus to diagonal and pour the reference Jet A slowly down side of tube.

6. Once tube is about 3/4 filled, return it to vertical, add fuel till it overflows into gallery.

7. Remove rubber stopper. Record time between timing reference points.

8. When apparatus has drained, replace stopper, tilt apparatus to diagonal and pour sample AMK slowly (90 seconds) down side of tube, not letting it hit bottom directly.

9. Repeat step 6.

10. Wait 60 seconds (fuel relaxation time) before removing stopper. Remove it slowly and gently with a turning motion to avoid causing suction.

11. Record time between timing reference points.

12. Dismantle lower filter plate and discard used filter. Rinse and drain apparatus.

APPENDIX C

DESCRIPTION OF FILTER SCREEN DEVICE

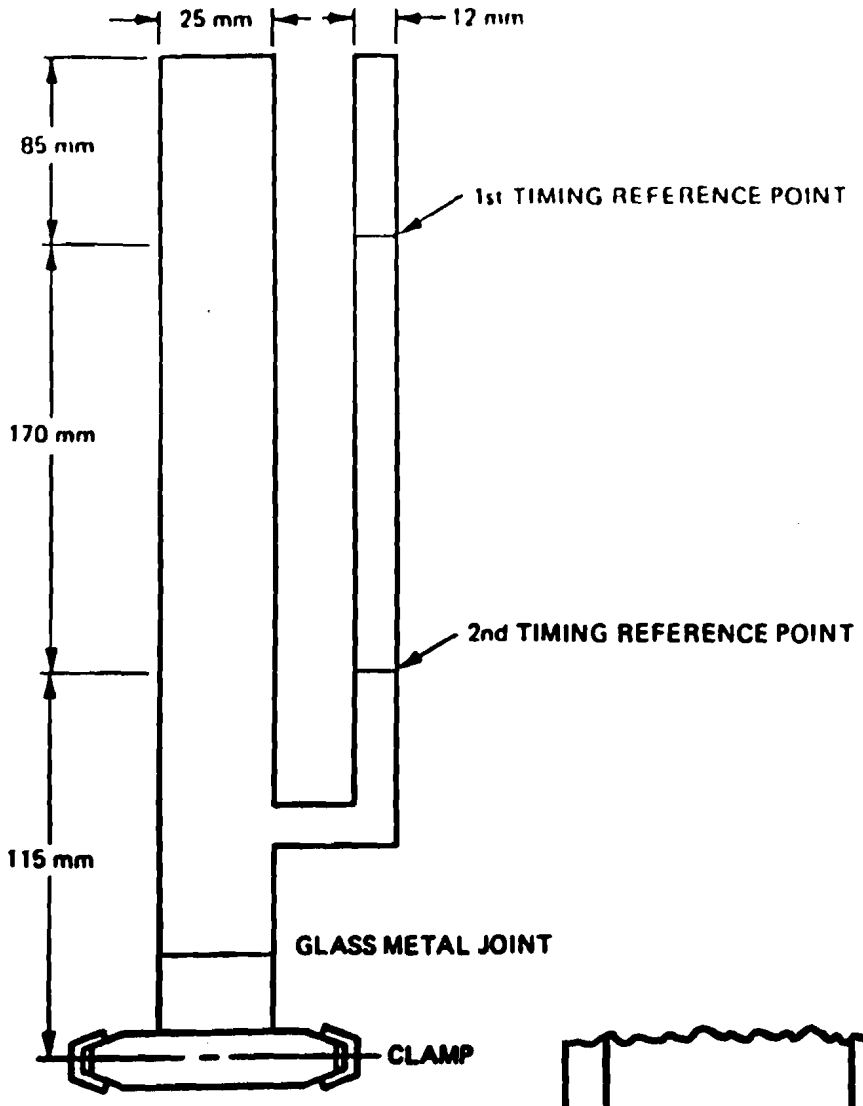

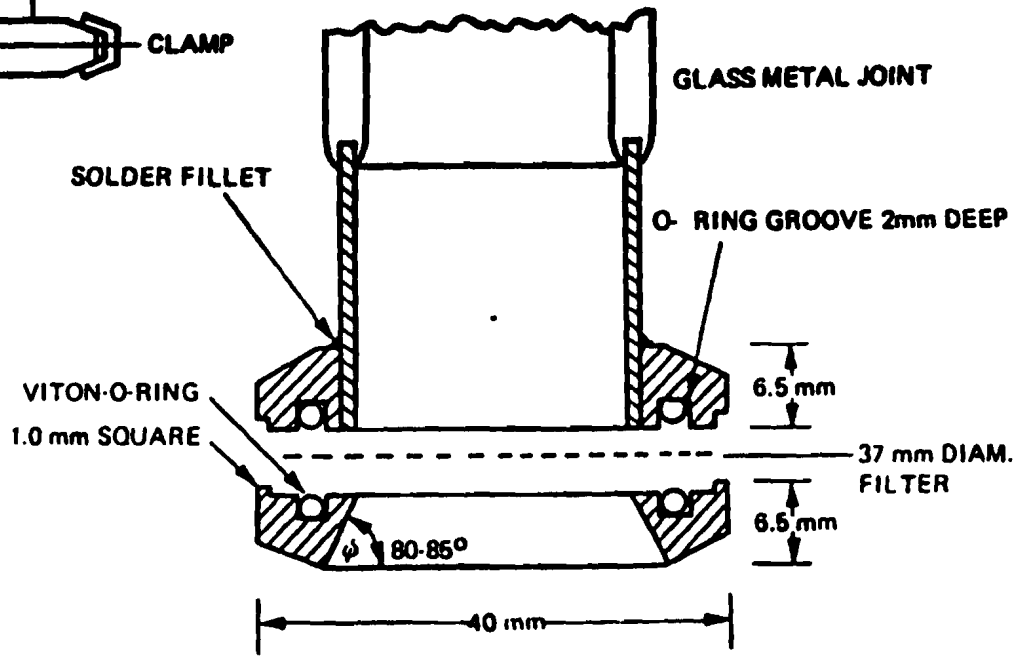

APPENDIX D

OPERATING PROCEDURE FOR ICI ORIFICE FLOW CUP TEST

CLEANING PROCEDURE:

1. Place cup in Jet A. Fill cup about halfway with Jet A.

2. Sonicate for 30 seconds in Jet A fuel; power rating at 7.

3. Blow until dry with 25 psi nitrogen (1/4" hose). It is important that the area around the orifice hole both inside and out is completely dry and void of any particles.

OPERATING PROCEDURE:

1. Suspend cup inside ring on ring stand; allow enough room below cup to permit introduction of graduated cylinder (preferably 10 cc).

2. Place finger over the hole, tilt cup slightly to one side. pour in fuel sample allowing fuel to run down the sides of the cup rather than hitting the bottom directly.

3. Let fuel overflow into gallery.

4. Once cup is full, allow 30 seconds before releasing finger (fuel relaxation time).

5. Release finger at 30 second mark, recovering fuel in beaker beneath hole. Let the cup drain for another 30 seconds.

6. Again at the 30 second mark, simultaneously slide graduated cylinder in place of beaker, collect for another 30 seconds then remove graduated cylinder and replace beaker. Record the amount of fluid collected in cylinder to the nearest 0.10 milliters (cc).

7. Discard collected material and repeat cleaning procedure.

APPENDIX E

OPERATING PROCEDURE FOR FCTA TEST

A special run procedure, described below, was devised for the FCTA to obtain rapid relative flammability measurement for quality control tests only. This procedure yields a single-point flammability temperature measurement and is not intended to replace standard FCTA procedure. It was incorporated because of the need to carry out testing on a routine basis.

1. The speed control dial which controls the fuel injection rate is set and recorded. Control dial settings range from 90-100 corresponding to low to high flow rates.

2. The air accumulator tank pressure which determines the air flow rate is allowed to climb to 6.5 atm (95 lb in^{-2}). This reading is taken at the highest pressure reached during the run and occurs just as the air begins to flow through the nozzle.

3. Temperature measurements are made with a 0.76 mm diameter lead, chromelalumel thermocouple. The probe is placed level with and 25 cm downstream of the exit flange tip. Thermocouple readings are made with a strip chart recorder set so that a 1 mm deflection (the minimum resolvable) corresponds to a 24° temperature change.

4. A series of runs is performed until these tests yield results consistent within the measuring precision of $\pm 12^{o}C$.

APPENDIX F

JPL PROCEDURE FOR AMK SLURRY PARTICLES SIZE EVALUATION

1. Place 100 grams of well homogenized slurry in a 2000 ml graduated "Griffin" beaker equipped with magnetic bar and a stirrer.

2. Slowly, with gentle stirring, dilute the slurry sample with 1500 ml of tap water. Continue stirring until the liquid is homogeneous and has the consistency of milk.

3. Pour the contents of the beaker through a 200 mesh (Tyler equipment) sieve and wash any material which remains on top of the sieve first with water and then with methyl alcohol. Place the sieve in drying oven at 50° and dry to constant weight.

4. Collect the powder and record its weight. A slurry with less than 0.05% (w/w) of particles above 75 micron size and practically free of particles above 100 micron size is of acceptable quality.

APPENDIX G

DISTRIBUTION LIST

Region Libraries

Alaska	AAL-64
Central	ACE-66
Eastern	AEA-62
Great Lakes	AGL-60
New England	ANE-40
Northwest-Mountain	ANM-60
Western-Pacific	AWP-60
Southern	ASO-63d
Southwest	ASW-40

Center Libraries

Technical Center	ACT-64
Aeronautical Center	AAC-44.4

Civil Aviation Authority
Aviation House
129 Kingsway
London WC2B 6NN England

Embassy of Australia
Civil Air Attache
1601 Mass Ave. NW
Washington, D. C. 20036

Scientific & Tech. Info FAC
Attn: NASA Rep.
P.O. Box 8757 BWI Aprt
Baltimore, Md. 21240

DOT-FAA AEU-500
American Embassy
APO New York, N. Y. 09667

Headquarters (Wash. DC)

ADL-1
ADL-32 (North)
APM-1
APM-13 (Nigro)
ALG-300
APA-300
API-19
AAT-1
AWS-1
AES-3

OST Headquarters Library

M-493.2 (Bldg. 10A)

University of California
Sers Dpt Inst of Trsp Std Lib
412 McLaughlin Hall
Berkely, CA 94720

British Embassy
Civil Air Attache ATS
3100 Mass Ave. NW
Washington, DC 20008

Dir. DuCentre Exp DE LA
Navigation Aerineene
941 Orly, France

Northwestern University
Trisnet Repository
Transportation Center Lib.
Evanston, Ill. 60201

Dr. Frank A. Albini
Northern Forrest Fire Lab
Drawer C
Missoula, MT 59806

A. Allcock
Department of Industry
Abell House, Room 643
John Islip Street, London
SW14 LN ENGLAND

Allied Pilot Association
Equipment Evaluation Comm.
P.O. Box 5524
Arlington, TX 76011

Dr. R. L. Altman
NASA ARC
M.S. 234-1
Moffett Field, CA 94035

Dr. S. J. Armour
Defense Research Establisment
Suffield
Ralston, Alberta
CANADA, TOJ 2NO

Robert Armstrong
B-8414 MS-9W61
Boeing Airplane Company
P.O. Box 3707
Seattle, WA 98124

M. C. Ingham
Chevron Research Company
P.O. Box 1627
Richmond, CA 94802-0627

Dr. D. E. Boswell
Quaker Chemical Corporation
Elm Street
Conschohocken, PA 19428

Don E. Buse
11B12AB
Phillips Petroleum Company
Bartlesville, OK 74004

Paul Campbell
244 Green Meadow Way
Palo Alto, CA 94306

William A. Callahan
ARCO Chemicals Company
1500 Market Street
Philadelphia, PA 19101

Dr. Homer W. Carhart
Naval Research Lab
Code 6180
Washington, DC 20375

Michael Cass
Sundstrand Corporation
4747 Harrison Avenue
Rockford, IL 61101

B&M Technological Service
520 Commonwealth Avenue
Boston, MA 02215

Arthur V. Churchill
AFWAL/POSF
Wright-Patterson AFB
Ohio 45433

Clayton F. Clark
Gulf Oil Chemicals Company
20506 Laverton
Katy, TX 77450

George A. Coffinberry
General Electric Company
1 Neumann Way
Mail Drop E-186
Cincinnati, OH 45215

Captain Ralph Combariati
Port Authority of NY and NJ
JFK International Airport
Jamaica, NY 11430
Edward Conklin

Sikorsky Aircraft
North Main Street
CT 06602

B. G. Corman
Exxon Research and Stratford,
Engineering
P.O. Box 4255
Baytown, TX 77520

Mr. G. A. Cundiff
General Electric Company
3 Penn Center Plaza
Philadelphia, PA 19102

FAA Northwest Mountain Region
ANM-140S
17900 Pacific Highway South
C-68966
Seattle, WA 98168

Frank Doyle
Systems Eng. Tech. Assoc.
601 Daily Drive, Suite 114
Camarillo, CA 93010

W. Dukek
11 Ridge Road
Summit, NJ 07901

David W. Eggerding
AMOCO Chemicals Corporation
Research and Development
P.O. Box 400
Naperville, IL 60540

John H. Enders
Flight Safety Foundation
5510 Columbia Pike
Arlington, VA 22204

Anthony Fiorentino
Pratt & Whitney Aircraft
EB2G4
400 Main Street
E. Hartford, CT 06108

F. Firth
Lucas Aerospace
Vannonstrand Avenue
Englewood, NJ 07632

Kent Fisher
Lockheed California Company
Department 70-30, Building 90
P.O. Box 551
Burbank, CA 91520

Mr. Ken Foley
Hercules Inc.
Research Center
Wilmington, DE 19899

Dr. Allen E. Fuhs
Department of Aeronautics
Naval Post Graduate School
Monterey, CA 93940

Dr. Gerald G. Fuller
Chemical Engineering
Stanford University
Stanford, CA 94305

Y. Funatsu
All Nippon Airways
1-6-6, Tokyo Internat'l A/P
Ohta-KU, Tokyo 144
JAPAN

Stanley Gray
Mechanical Technology Inc.
968 Albany Shaker Road
Latham, NY 12110

Ray J. Grill
TRW
1766 Sunset Drive
Richmond Heights, OH 44124

Lit S. Han
Ohio State University
206 W. 18th Avenue
Columbus, OH 43210

M. Hardy
United Airlines
SFOEG, MOC
San Francisco Internat'l A/P
California 94128

Cyrus P. Henry
E. I. Dupont De Nemours
and Company
Petroleum Lab
Wilmington, DE 19898

Arthur Hoffman
American Cynamid
1937 W. Main Street
Stamford, CT 06904

Gary L. Horton
Chemical Research Division
Conoco, Inc.
P.O. Box 1267
Ponca City, OK 74603

G. Jahrstorfer
Chandler Evans, Inc.
Charteroak Boulevard
West Hartford, CT 06110

Stanley Jones
Pan American World Airways
JFK International Airport
New York, NY 11420

Rob Koller
Rohm & Haas
727 Norristown Road
Spring House, PA 19477

Dr. John Krynitsky
Fuels and Petroleum Products
4904 Cumberland Avenue
Chevy Chase, MD 20015

Dr. R. Landel
Jet Propulsion Lab
4800 Oak Grove Drive
Pasadena, CA 91103

TWA, Inc.
Kansas City Internat'l A/P
2-280
P.O. Box 20126
Kansas City, MO 64195

W. Hock
Grumman Aerospace Corporation
B 14 035
111 Stewart Avenue
Bethpage, NJ 11714

LCDR William Holland
Department of the Navy
NAIR 518
Naval Air Systems Command
Washington, DC 20361

Peter Meiklem
Civial Aviation Attache
3100 Massachusetts Ave., NW.
Washington, DC 20008

J. P. Jamieson
National Gas Turbine
Establishment
Pyestock, Farnborough, Hants
ENGLAND

John Kirzovensky
Naval Air Propulsion Center
Code PE71
1440 Parkway Avenue
Trenton, NJ 08628

Robert J. Kostelnik
ARCO Chemical Company
3801 West Chester Pike
Newton Square, PA 19073

Dr. Karl Laden
Carter-Wallace, Inc.
Half Acre Road
Cranbury, NJ 08512

R. Laurens
Rolls-Royce, Inc.
1895 Phoenix Boulevard
Atlanta, GA 30349

C. Scott Letcher
Petrolite Corporation
P.O. Drawer K
Tulsa, OK 74112

Dr. Richard Mannheimer
Southwest Research Institute
8500 Culebra Road
San Antonio, TX 78284

James McAbee
ICI Americas, Inc.
Specialty Chemicals Division
Wilmington, DE 19897

Robert J. Moore
Shell Chemical Company
Box 2463
Houston, TX 77001

Warren D. Niederhauser
Rohm & Haas Company
727 Norristown Road
Spring House, PA 19477

Dean Oliva
Lockheed
Department 7475/Building 229A
P.O. Box 551, Plant 2
Burbank, CA 91520

James H. O'Mara
Rohm and Haas
727 Norristown Road
Spring House, PA 19477

Dr. Robert H. Page
Texas A&M University
College of Engineering
College Station, TX 77884

R. E. Pardue
Lockheed/Georgia Company
2599 Club Valley Drive
Marietta, GA 30060

P. Longjohn
Calgon Corporation
P.O. Box 1346
Pittsburgh, PA 15230

Charles McGuire
Department of Transportation
400 7th Street, SW. (P-5)
Washington, DC 20590

M. L. McMillan
G.M. Research
Fuels & Lubricants Department
Warren, MI 48090

Chief Scientist
Civil Aviation Authority
CAA House 45-59 Kingsway
London WC2B 6 TE
ENGLAND

J. J. O'Donnell
Airline Pilots Association
1625 Massachusetts Ave., NW.
Washington, DC 20036

Dr. Robert C. Oliver
Institute for Defense
Analyses
1801 N. Bauregard Street
Alexandria, VA 22311

George Opdyke
AVCO Lycoming Division
550 S. Main Street
Stratford, CT 06497

Chris Papastrat
CEE Electronics, Inc.
8875 Midnight Pass Road
Sarasota, FL 33581

Sam Paton
El Paso Products
P.O. Box 3986
Odessa, TX 79760

A. Peacock
Douglas Aircraft Company
3855 Lakewood Boulevard
Longbeach, CA 90846

Dr. Andy Powell
Saudia - CC 836
P.O. Box #167
Jeddah
SAUDIA ARABIA

J. Romans
Hughes Association, Inc.
9111 Louis Avenue
Silver Spring, MD 20910

Charles Rivers
ICI Americas, Inc.
Wilmington, DE 19897

David P. Satterfield
Rothfuss Fire Protection
P.O. Box 97
Columbus, MD 21045

R. Hileman
Texaco, Inc.
Box 509
Beacon, NY 12508

Barry Scott, ADL-31
P.O. Box 25
NASA Ames Research Center
Moffett Field, CA 94035

Subhash Shah
Allied Chemical
Syracuse Research Lab
P.O. Box 6
Salsbury, NY 13209

John Pullekins
Air Products & Chemicals
Industrial Chemical Division
P.O. Box 538
Allentown, PA 18105

Richard W. Reiter
National Starch & Chemical
Box 6500
10 Finderne Avenue
Bridgewater, NJ 08807

M. Rippen
Pratt & Whitney Aircraft
Government Products Division
P.O. Box 2691
West Palm Beach, FL 33402

Dr. V. Sarohia
Jet Propulsion Lab
M/S 125-159
4800 Oak Grove Drive
Pasadena, CA 91103

George Savins
Mobile Oil Research and
Development
P.O. Box 819047
Dallas, TX 75381

Forrest W. Schaekel
U.S. Army MERADCOM
Ft. Belvoir, VA 22060

Professor Valentinas Sernas
Rutgers University
College of Engineering
P.O. Box 909
Piscataway, NJ 08854

Dick Stutz
Sikorsky Aircraft
Engineering Department
Stratford, CT 06602

Mr. Anthony Simone
Facet Enterprises, Inc.
Filter Products Division
434 W. Twelve Mile Road
Madison Heights, MI 48071

S. Sokolsky
Aerospace Corporation
P.O. Box 91957
Los Angeles, CA 90009

Barry Stewart
Olin Chemicals
Bradenburg, KY 40108

Dr. Warren C. Strahle
Georgia Institute of Technology
School of Aerospace Engineering
Atlanta, GA 30332

Robert L. Talley
Falcon Research
1 American Drive
Buffalo, NY 15225

Joseph Thibodeau
Goodyear Aerospace Corporation
1210 Massillon Road
Akron, OH 44315

I. Thomas
Boeing Commercial Airplane Co.
P.O. Box 3707 05-41
Seattle, WA 98004

Dr. F. F. Tolle
Boeing Military Airplane Co.
P.O. Box 3707
M/S 4152
Seattle, WA 98124

R. Hugh Trask
Southland Corporation
849 Coast Boulevard
LaJolla, CA 93034

Hakam Singh, Phd.
Product Chemical and Research
Corporation
2920 Empire Avenue
Burbank, CA 91504

Dana Smith
ARCO Chemical Company
1500 Market Street, 32nd Fl
Philadelphia, PA 19101

F. J. Stockemer
Department 74-758, Bldg 88
P.O. Box 551
Lockheed California Company
Burbank, CA 91520

Kurt H. Strauss
Consultant, Aviation Fuels
116 Hooker Avenue
Poughkeepsie, NY 12601

A. F. Taylor
Cranfield Institute of
Technology
Cranfield Bedford, MK 43 OAL
ENGLAND

Air Transport Association
1709 New York Avenue, NW.
Washington, DC 20007

A. R. Tobiason
Air Transport Association
1709 New York Avenue, NW.
Washington, DC 20006

Jerry G. Tomlinson
General Motors
Detroit Diesel Allison Div
P.O. Box 894
Indianapolis, IN 46206

M. Trimble
Delta Airlines
DEAT 568
Atlanta Internat'l Airport
Atlanta, GA 30320

Robert Umschied
M.S.E.-6
9709 E. Central
Wichita, KS 19328

J. F. Vikuski
Dow Chemical Company
1702 Building
Midland, MI 48640

Dr. G. J. Walter
Sherwin-Williams Company
501 Murray Road
Cincinnati, OH 45217

Paul Weitz
Simmonds Precision Instruments
Panton Road
Vergennes, VT 05491

Richard White
Denry White, Inc.
P.O. Box 30088
Cleveland, OH 44130

R. P. Williams
Phillips Petroleum
107 Catalyst Lab
Bartlesville, OK 74004

Jacques L. Zakin
Ohio State University
Dept of Chemical Engineering
140 W. 9th Avenue
Columbus, OH 43210

D. L. Garbutt
Resin and Process Development
United Technologies Inmont
4700 Paddock Road
Cincinnati, OH 45229

Major Hudson
Air Force Inspection and Safety
SEDM
Norton AFB, CA 92499

E. Versaw
Lockheed/California Company
P.O. Box 551
Burbank, CA 91520

Fred Waite
Imperial Chemical Ind. Ltd.
Paints Division
Wexham Road, Slough SL2 5DS
ENGLAND

H. Weinberg
Exxon Research and
Engineering Company
P.O. Box 45
Linden, NJ 07036

John White
National Transportation
Safety Board
800 Independence Avenue, SW.
Washington, DC 20594

Dr. S. P. Wilford
Royal Aircraft Establishment
Farnborough, Hants
GU146TD
ENGLAND

Ken Williamson
Facet Enterprises, Inc.
P.O. Box 50096
Tulsa, OK 74150

R. E. Zalesky
Lockheed California Company
P.O. Box 551
Burbank, CA 91520

David H. Fishman
Tech Planning & Development
United Technologies Inmont
1255 Broad Street
Clifton, NJ 07015

Dr. C. W. Kauffman
The University of Michigan
Gas Dynamics Laboratories
Aerospace Engineerng Building
Ann Arbor, MI 48109

Dr. Barry Scallet
Annheuser-Busch
Central Research Inc.
P.O. Box 11841
Clayton, MO 63105

Mr. J. I. Knepper
Petrolite Corporation
369 Marshall Avenue
St. Louis, MO 63119

Dr. James Teng, Ph.D.
Annheuser-Busch Corporation
1101 Wyoming Street
St. Louis, MO 63118

Fred W. Cole
Director, Research & Development
Facet Enterprises, Inc.
P.O. Box 50096
Tulsa, OK 74150

Terence Dixon
Boeing Aerospace Company
P.O. Box 3999
M/S 8J-93
Seattle, WA 98124

James M. Peterson
Wallace Aircraft Division
Cessna Aircraft Company
P.O. Box 7704
Wichita, KS 67277

Richard G. Thrush
Lear Siegler, Inc.
241 South Abee Road
P.O. Box 4014
Elyria, OH 44036

J. Donald Collier
Air Transport Association
of America
1709 New York Avenue, NW.
Washington, DC 20006

Richard J. Linn
American Airlines
MD 4H14
P.O. Box 61616
Dallas/Ft Worth A/P, TX 75261

Peter A. Stranges
United Technologies Res Ctr
1825 I Street, NW.
Suite 700
Washington, DC 20006

G. Chris Meldrum
Texaco Company
P.O. Box 430
Bellaire, TX 77401

Perry Kirklin
Mobil Research and
Development Corporation
Paulsboro, NJ 08066

George A. Cantley
Lear Siegler, Inc.
241 South Abbe Road
P.O. Box 4014
Elyria, OH 44036

John T. Eschbaugh
Air Maze Incom International
25000 Miles Road
Cleveland, OH 44198

E. T. Roockey
Northrop Corporation
Aircraft Division
One Northrop Avenue
Hawthorne, CA 90250

Peter D. Moss
American Hoechst Corporation
Route 206 North
Somerville, NJ 08876

David J. Goldsmith
Eastern Airlines
Miami International Airport
Miami, FL 33148

H. Daniel Smith
Mgr, Research & Development
Engineered Fabrics Division
Goodyear Aerospace Corp
Akron, OH 44315

Richard R. Lyman
Lear Siegler, Inc.
Energy Products Division
2040 East Dyer Road
Santa Ana, CA 92702

C. C. Randall, P.E.
Lockheed Georgia Company
D72-47 Zone 418
Marietta, GA 30063

Captain A. S. Mattox, Jr.
Allied Pilots Association
12723 Brewster Circle
Woodbridge, VA 22191

G. Haigh
Air Canada
Air Canada Base, Montreal
International Airport
Quebec, CANADA H4Y 1 C2

Ray Fitzpatrick
South African Airways
329 Van Riebeeck Road
Glenn Austin Halfway House,1685
REPUBLIC OF SOUTH AFRICA

Stephen L. Imbrogno
Pratt & Whitney Aircraft Group
Government Products Division
M/S 711-52
West Palm Beach, FL 33402

C. R. Goctzman
EI Dupont Company
Vetrochemicals Department
Wilmington, DE 19898

David Nesterok, ACT-2P
DOT/FAA Technical Center
Atlantic City, NJ 08405

Leo Stamler
Gull Airborne Instruments, Inc.
395 Oser Avenue
Smithtowne, NY

Clifford D. Cannon
Transamerica Delaval, Inc.
Wiggins Connectors Division
5000 Triggs Street
Los Angeles, CA 90022

T. Ted Tsue
Boeing Aerospace Company
P.O. Box 3999
M/S 45-07
Seattle, WA 98124

Dick Coykendall
United Airlines
San Francisco International
Airport
San Francisco, CA 94128

R. Kassinger
Exxon International Company
Commercial Department
200 Park Avenue
Florham, NJ 07932

Lou Brown, AWS-120
FAA National Headquarters
800 Independence Avenue, SW.
Washington, DC 20591

Ronald Camp
BASF Wyandotte Corporation
1609 Biddle Avenue
Wyandotte, MI 48192

Dr. Thor Eklund, ACT-350
DOT/FAA Technical Center
Atlantic City, NJ 08405

Rick DeMeis
126 Powers Street
Needham, MA 02192

Horst Rademacher
68 Myrtle Street
Boston, MA 02114

Steven L. Baxter
Conoco, Inc.
Chemicals Research Division
P.O. Box 1267
Ponca City, OK 74601

R. D. Pharby
Petro Canada
Sheridan Park
Mississauga, Ontario
CANADA, L5K1A8

J. C. Clerc
Chevron Research Company
P.O. Box 1627
Richmond, CA 94802-0627

Robert L. Hoover
Box 10850 Cave Creek Stage
Phoenix, AZ 85020

Young I. Cho, Ph.D.
Drexel University
College of Engineering
Philadelphia, PA 19104

☆U.S. GOVERNMENT PRINTING OFFICE: 1986–605-071/40059