FAA WJH Technical Center
00090680

DOT/FAA/CT-86/3

**FAA Technical Center**
Atlantic City International Airport
N.J. 08405

# Antimisting Kerosene: Low Temperature Degradation and Blending

A. Yavrouian
P. Parikh
V. Sarohia

NASA/Jet Propulsion Laboratory
California Institute of Technology
Pasadena, California 91109

June 1988

Final Report

This document is available to the U.S. public through the National Technical Information Service, Springfield, Virginia 22161.

U.S. Department of Transportation
**Federal Aviation Administration**

## NOTICE

This document is disseminated under the sponsorship of the Department of Transportation in the interest of information exchange. The United States Government assumes no liability for the contents or use thereof.

The United States Government does not endorse products or manufacturers. Trade or manufacturer's names appear herein solely because they are considered essential to the object of this report.

**Technical Report Documentation Page**

| 1. Report No. | 2. Government Accession No. | 3. Recipient's Catalog No. |
|---|---|---|
| DOT/FAA/CT-86/3 | | |

| 4. Title and Subtitle | 5. Report Date |
|---|---|
| ANTIMISTING KEROSENE: LOW TEMPERATURE DEGRADATION AND BLENDING | June 1988 |
| | 6. Performing Organization Code |
| 7. Author(s) A. Yavrouian, P. Parikh, V. Sarohia | 8. Performing Organization Report No. JPL Publication D-5518 |
| 9. Performing Organization Name and Address NASA Jet Propulsion Laboratory California Institute of Technology 4800 Oak Grove Drive Pasadena, California 91109 | 10. Work Unit No. (TRAIS) |
| | 11. Contract or Grant No. DTFA03-80-A-00215 |
| 12. Sponsoring Agency Name and Address U.S. Department of Transportation Federal Aviation Administration Technical Center Atlantic City Airport, New Jersey 08405 | 13. Type of Report and Period Covered Final Report June 1983 - August 1985 |
| | 14. Sponsoring Agency Code |

15. Supplementary Notes

Technical Contract Monitor: Mr. Bruce Fenton, Engine/Fuel Safety Branch
FAA Technical Center
Atlantic City Airport, New Jersey 08405

16. Abstract


The inline filtration characteristics of freshly blended and degraded AMK fuels at low temperature are examined in this report. A basic needle valve degrader was modified to include partial recirculation of degraded fuel and heat addition in the bypass loop. A pressure drop across the needle valve of up to 4,000 psi was employed in the study. The pressure drop across a 325-mesh filter screen placed inline with the degrader and directly downstream of the needle valve was measured as a function of time for different values of pressure drop across the needle valve. A volume flux of 1 gpm/in$^2$ (9.8 cm/sec) was employed based on the frontal area of the screen. It was found that, at ambient temperature, freshly blended AMK fuel could be degraded using a single pass degradation at 4,000 psi pressure drop across the needle valve to give acceptable filterability performance. At fuel temperatures below -20°C, degradation becomes increasingly difficult and a single pass technique results in unacceptable filtration performance. Recirculation of a fraction of the degraded fuel and heat addition in the bypass loop improved low temperature degradation performance.

In addition, this report addresses the problems associated with blending the AMK additive with Jet A at various base fuel temperatures. These tests established that AMK blended at temperatures between 0 and +30°C produced adequate fire protection characteristics within 15-20 minutes after blending.


| 17. Key Words | 18. Distribution Statement |
|---|---|
| Aircraft Fires, Aircraft Safety, Antimisting Fuels, Safety Fuels | Document is available to the U.S. public through the National Technical Information Service, Springfield, Virginia 22161 |

| 19. Security Classif. (of this report) | 20. Security Classif. (of this page) | 21. No. of Pages | 22. Price |
|---|---|---|---|
| Unclassified | Unclassified | 57 | |

Form DOT F 1700.7 (8-72) Reproduction of completed page authorized

## ACKNOWLEDGEMENTS

This report represents the results of research carried out at the Jet Propulsion Laboratory, California Institute of Technology under Contract NAS7-100, Task Order RD-152, Amendment 249, sponsored by the Department of Transportation, Federal Aviation Administration under agreement No. DTFA03-80-A-00215. The authors extend their gratitude to Mr. Bruce Fenton, Mr. E. Klueg, and Mr. W. T. Westfield at the FAA Technical Center for providing a global picture of AMK technology in its implementation by the aircraft industry throughout this effort. The assistance of Messrs. W. Bixler and S. Kikkert in the fabrication and operation of the apparatus is gratefully acknowledged.

## TABLE OF CONTENTS


| | PAGE |
|---|---|
| EXECUTIVE SUMMARY | ix |
| INTRODUCTION | 1 |
| EXPERIMENTAL APPARATUS | 3 |
| AMK Degrader | 3 |
| Degrader Design Improvements | 8 |
| AMK Blending Apparatus | 10 |
| EXPERIMENTAL PROCEDURES | 14 |
| AMK Degrader | 14 |
| AMK Fuel Blending | 15 |
| RESULTS AND DISCUSSION | 16 |
| Degrader Experiments | 16 |
| Results For Improved Degrader | 19 |
| Blending Experiments | 25 |
| CONCLUSIONS | 33 |
| REFERENCES | 34 |
| APPENDICES | |
| A. Operating Procedure For Filter Ratio Test | |
| B. Operating Procedure For ICI Cup Test | |
| C. Distribution List | |

## LIST OF ILLUSTRATIONS


| FIGURE | | PAGE |
|---|---|---|
| 1 | SCHEMATIC OF MARK I DEGRADER | 5 |
| 2 | PHOTOGRAPH OF MARK I DEGRADER | 6 |
| 3 | PHOTOGRAPH OF FILTER ARRANGEMENT | 7 |
| 4 | SCHEMATIC OF MARK II DEGRADER/FILTERABILITY APPARATUS | 9 |
| 5 | INLINE BLENDING APPARATUS | 10 |
| 6 | LOW TEMPERATURE INLINE BLENDING APPARATUS | 12 |
| 7 | PHOTOGRAPH OF THE LOW TEMPERATURE INLINE BLENDING APPARATUS | 13 |
| 8 | FILTRATION CHARACTERISTICS, TEST NO. 5 | 21 |
| 9 | FILTRATION CHARACTERISTICS, TEST NO. 6 | 23 |
| 10 | FILTRATION CHARACTERISTICS, TEST NO. 7 | 24 |
| 11 | FILTRATION CHARACTERISTICS, TEST NO. 8 | 26 |
| 12 | FILTRATION CHARACTERISTICS, TEST NO. 9 | 27 |
| 13 | INFLUENCE OF BLENDING TEMPERATURE ON POLYMER DISSOLUTION RATE | 28 |

## LIST OF TABLES


| TABLE | | PAGE |
|---|---|---|
| 1 | FILTER VOLUME FLUX DATA | 4 |
| 2 | DEGRADATION/FILTERABILITY TEST PARAMETERS (MARK I DEGRADER) | 4 |
| 3 | DEGRADATION/FILTERABILITY DATA (MARK I DEGRADER TESTS) | 17 |
| 4 | DEGRADATION/FILTERABILITY DATA, FUEL SAMPLE CHARACTERIZATION (MARK I DEGRADER TESTS) | 18 |
| 5 | LIST OF TESTS WITH MARK II DEGRADER | 20 |
| 6 | MARK II DEGRADER STEADY-STATE TEMPERATURE DATA | 22 |
| 7 | INFLUENCE OF FUEL TEMPERATURE ON AMK BLENDING AND FIRE PROTECTION CAPABILITIES (FIRST SERIES OF TESTS) | 30 |
| 8 | POLYMER SLURRY AND BASE FUEL PROPERTIES | 31 |
| 9 | INFLUENCE OF FUEL TEMPERATURE ON AMK BLENDING AND FIRE PROTECTION CAPABILITIES (SECOND SERIES OF TESTS) | 32 |

# EXECUTIVE SUMMARY

Aerodynamic breakup of conventional jet fuel, when released in a high speed airstream, forms an easily ignitable fine mist of droplets that has been identified as a major cause of post crast fire fatalities in impact survivable crashes. Suppression of this misting tendency of jet fuels by addition of a small concentration of polymers significantly reduces post crash fire hazards. Such an antimisting fuel must be compatible with existing turbine engine systems. Acceptable methods are being developed to restore the antimisting fuel (AMK) to rheological properties close to those of conventional jet fuel before engine use. Mechanical means of polymer degradation have been found to be practicable and acceptable.

Any one of several mechanical degradation techniques may be used to produce AMK with nozzle spray characteristics similar to those of Jet A fuel. Achieving good combustion performance in an engine combustor is, therefore, not a problem. However, difficulties have been encountered in achieving good engine filterability performance at low temperature with freshly blended AMK at a resonable power consumption.

The Jet Propulsion Laboratory (JPL) work was directed at addressing the degradability of low temperature and freshly blended AMK. The basic degradation technique used was the needle value pressure drop technique developed by Southwest Research Institute. However, the JPL system incorporated some additional features such as a partial recirculation of degraded fuel and a fuel heater in the bypass loop simulating an oil to fuel heat exchanger. These additional features successfully alleviated the filterability problems encountered at low temperature with freshly blended AMK fuels.

Freshly blended AMK fuel, at ambient temperature can be degraded using a single pass through a needle valve at 4000 psi pressure drop to give acceptable inline filterability performance. At fuel temperatures below -20°C, degradation becomes increasingly difficult and a single pass technique results in unacceptable filtration performance. Recirculation of a fraction of the degraded fuel and heat addition in the bypass loop improved the low temperature degradation performance.

This report also presents the results from an evaluation to determine the influence of the base fuel temperature on the inline blending of AMK. The polymer dissolution rate was evaluated using a modified 1-liter per minute inline blender with base fuel temperatures ranging from -30°C up to +40°C. The dissolution rate and the quality of the freshly bended fuel were evaluated by the JPL Mini-wing shear fire test and fuel turbidity measurements.

AMK fuel blended in the temperature range between 0°C to +30°C produced adequate fire protection properties within 15 to 20 minutes after blending. At base fuel temperatures below 0°C, the polymer dissolution rate was too slow and above +30°C, the fuel gradually lost its fire suppression properties.

# INTRODUCTION

When released in a high speed airstream, the aerodynamic breakup of conventional jet fuel forms an easily ignitable fine mist of droplets that has been identified as the major cause of postcrash fire fatalities in impact survivable crashes. Suppression of this misting tendency of jet fuels by addition of a small concentration of polymers significantly reduces postcrash fire hazards. Such an antimisting fuel must be compatible with gas turbine engine fuel systems. Acceptable methods are being developed to restore the antimisting kerosene (AMK) fuel to rheological properties close to those of conventional jet fuel before it is used in the engine. This restoration process is accomplished by degrading the AMK polymer additive. Several processes have been considered for restoration of AMK. These include the use of intense visible or ultraviolet radiation, catalysts, ultrasonics, and microwaves as well as mechanical devices that impart a high shearing rate to breakdown the polymer chains (reference 1). All non-mechanical means of degradation have been found to be either inefficient or not practical for aircraft application. Mechanical degradation has been shown to be feasible, but the required level of degradation must be achieved at an acceptable level of power consumption.

Several investigators have used mechanical degradation techniques to produce engine compatible AMK. For example, Mannheimer (reference 2) forced AMK through various types of flow restrictors (packed tubes, static mixing tubes, needle valve) under high pressure. Coffinberry (reference 3) used a modified high-speed centrifugal pump to impart high shear rates to AMK. Fiorentino (reference 4) used several passes through an engine fuel pump consisting of a gear pump and and high-speed centrifugal booster. Under the Royal Aircraft Establishment (RAE) sponsorship, Plessey Aerospace Ltd (reference 5) developed a combined pump-degrader based on the main engine fuel pump from the Phantom-Spey Aircraft. A prototype flight degrader was developed by General Electric (GE) for the Federal Aviation Administration (FAA) based on a high-speed, augmentor centrifugal pump for its military F-101 engine (reference 6). This degrader was used in one of the engines of the Convair 880 flight test vehicle and in all four engines of the Controlled Impact Demonstration (CID) B-720 aircraft. By any one of these mechanical techniques, AMK may be degraded to achieve engine combustor nozzle spray characteristics similar to those of the Jet A fuel. Combustion performance in the engine combustor with AMK fuel is therefore not likely to be a problem when using any one of these degradation techniques.

However, achieving acceptable filtration characteristics through engine fuel filters at a representative mass flux and a reasonable power consumption has been a problem (reference 2). The problem is aggravated at low fuel temperature and for freshly blended fuels. This was evidenced by low temperature degradation and filtration tests conducted at Boeing (reference 7) using the Mannheimer (reference 2) needle valve degrader.

One measure of the level of AMK degradation is the filter ratio measurement described in appendix A. Here a specified volume of the degraded fuel sample is passed through a 17-micron screen, and the flow time is compared with that for the base fuel flow through the same screen. The ratio of the AMK flow time and the Jet A flow time is defined as the filter ratio of the AMK fuel. Both flow times are measured at the same fuel temperature. It is difficult to assess filtration characteristics of degraded AMK through engine fuel filters by a filter ratio

measurement. This is due to the fact that the filter ratio measurement is not performed inline with a degrader device, causing a time lag of at least several minutes between degradation and the filter ratio measurement. The rheological properties of freshly blended, then degraded AMK are known to change with time. Therefore, the filter ratio of freshly blended/degraded AMK is likely to give a misleading assessment of the filterability through the engine fuel system. Any meaningful filterability evaluation must therefore be performed inline with the degrader device.

Inline filterability tests using equilibrated Imperial Chemical Industries (ICI) batch blended AMK were reported by Mannheimer (reference 2). The single pass degrader consisted of a TF-30 engine hydraulic pump which forced AMK through a needle valve at a 4000 pounds-per-square-inch (psi) pressure drop. The high pressure pump had enough capacity to supply the rated flow for a JT-8D engine. The degraded fuel was passed through the JT-8D fuel filters immediately downstream of the needle valve. The pressure drop across the filters was monitored and compared with the corresponding Jet A baseline pressure drop. No difficulty was encountered with single pass degradation of ambient temperature AMK at a power consumption greater than 14 kilowatt seconds (kw-s) per liter. However, with freshly blended AMK at fuel temperatures below 0°C filter gelling problems were encountered.

Jet Propulsion Laboratory (JPL) work was directed at the low temperature and freshly blended AMK degradation problems. The basic degradation technique used the high pressure drop flow through a needle valve developed by Mannheimer. However, in contrast to the single pass technique used by Mannheimer, a bypass loop which recirculated a fraction of the degraded flow out of the needle valve and back to the high pressure pump inlet was incorporated to an improved version of the degrader. An electric heater to simulate engine lubrication oil to fuel heat exchanger was added in the bypass loop. A counterflow heat exchanger between incoming cold AMK and outgoing higher temperature degraded AMK was also added. These modifications improved the low temperature degradation performance of the degrader.

The second part of this investigation was directed at evaluating the influence of the base fuel temperature on the dissolution rate of the polymer. The reason for this was the dependence of AMK fuel degradability on the degree of polymer equilibration, while the polymer dissolution rate determines the onset of adequate fire-suppressing properties of the fuel. In both cases the faster the polymer dissolution rate, the sooner the fuel achieves maximum fire-protection and acceptable degradability characteristics.

The antimisting additives that have been evaluated in this investigation are high molecular weight polymers and as such are susceptible to mechanical degradation after dissolution in jet fuel. Their ability to alter the rheological properties of the fuel make AMK fuel more difficult to filter than untreated kerosene. The filtration consideration, sensitivity to bulk water, limited shelf life, and unintentional degradation necessitate that the blending of these antimisting additives into kerosenes be done at the aircraft refueling point. It is therefore necessary to evaluate the feasibility of the blending process in view of the significant base fuel temperature variations (-25°C to +40°C) which could be encountered at the various refueling points.

The mist suppression quality of the blended fuel was determined by the JPL Mini-wing shear fire test, and the rate of dissolution was monitored with a continuous reading nephelometric instrument (clarity being an indicator of this quality).

## Objectives

The objectives of the AMK low temperature degradation and blending work reported here were:

1) To evaluate the degradability of the low temperature and freshly blended AMK by inline filterability tests.

2) To develop and improve the needle valve degradation technique to yield better degrader performance at low temperature with freshly blended AMK.

3) To evaluate the effect of base fuel temperature on slurry dissolution rate for the range of temperatures from +40°C down to -20°C.

# EXPERIMENTAL APPARATUS

## AMK Degrader

During the design stage of this task, it was decided to build a continuous flow AMK degrader of 1-gallon-per-minute (gpm) through flow. This flow rate was chosen to represent the fuel flow requirement at approximately 80 percent maximum continuous power of an existing JT-8D single can combustor rig at JPL.

A high pressure axial piston pump, normally used in hydraulic power transmission applications was selected to pressurize AMK through a needle valve. The pump has seven axial pistons which operate off a cam drive mounted on a central shaft. The pump was rated to deliver a maximum of 1.8 gpm at a shaft speed of 1800 revolutions per minute (rpm) and small (100-200 psi gauge) delivery pressures. This rated maximum flow rate decreased to 1.64 gpm at a maximum delivery pressure of 10,000 psi. The horsepower requirement at 1,800 rpm and 5,000 psi delivery pressure was approximately 5 hp. The pump was directly coupled to a 5 hp Reliance Electric variable speed dc motor with a maximum attainable rated motor speed of 1750 rpm.

In the first series of experiments, single pass degradation was performed in the installation shown schematically in figure 1. A photograph of the degrader setup is shown in figure 2. Either Jet A or the AMK was supplied to the high pressure axial piston pump from 55-gallon barrels via a three-way valve (see figure 1). This arrangement was used to generate baseline Jet A filter pressure drop data for reference, prior to the passage of degraded AMK through the same filter. A relief valve was connected between the exit and the inlet sides of the high pressure pump as a safety measure to limit the maximum delivery pressure in the event of an accidental valve closure in the delivery line. The relief valve was set to open at 5,000 psi.

Referring to figure 1, the pressurized fuel was throttled by passage through a 1/2-inch needle valve. The pressure drop $\Delta P_1$ across the needle valve was monitored by a high-pressure differential pressure transducer. The fuel flow exiting the needle valve was allowed to pass through one of the two paths determined by the positions of a pair of ball valves. The flow was either allowed to bypass the test filters or pass entirely through the test filters. This arrangement was selected to prevent passage of undegraded fuel through the filters during initial adjustments of the needle valve to obtain the desired throttling pressure drop.

Two filters were used in series as shown schematically in figure 1 and photographically in figure 3. The test filter had a frontal area of 1 $in^2$ while the pre-filter had a frontal area four times larger. The same stainless steel screen material was used for both filters. This arrangement was used to filter out any dirt or metallic particles that may be generated during operation. This arrangement ensured that any changes in the pressure drop across the test filter was not caused by solid particle blockage. The final test of this arrangement was made by running the system on Jet A for a period of several hours without a noticeable change in the pressure drop across the test filter and only a small change in the pressure drop across the larger pre-filter.

The test filter material and the filter frontal area were selected to simulate the flow conditions in the wash flow filter of an engine fuel control. The filter material was a 325-mesh stainless steel wire screen with approximately 40 micron rated openings. The data on volume flux were obtained from those reported by Mannheimer (reference 2) and Fiorentino (reference 4) and are summarized in table 1. A nominal volume flux value of 1 $gpm/in^2$ (9.8 centimeters per second) was chosen for the filterability experiments reported here. The test parameters of the present single pass degradation/filterability experiments are summarized in table 2.

TABLE 1

FILTER VOLUME FLUX DATA

| Investigator | Mass Flow Rate | Volume Flow Rate | Filter Area* | Volume Flux |
|---|---|---|---|---|
| | $lb_m/hr$** | gpm | $in^2$ | $gpm/in^2$ |
| Mannheimer | 705 | 1.778 | 1.55 | 1.147 |
| | 1498 | 3.778 | 1.55 | 2.440 |
| Fiorentino | 600 | 1.50 | 7.10 | 0.21 |

*Wash flow filter (325-mesh screen) to fuel control.
**Pound mass per hour.

TABLE 2

DEGRADATION/FILTERABILITY TEST PARAMETERS (MARK I DEGRADER)

Flow Rate: 1 gpm

Needle Valve Pressure Drop, $(\Delta P)_1$: 4000 psi

Degrader Power: 17.6 kw-s/Liter = 2.335 hp/gpm

Filter Frontal Area: 1 $in^2$

Filter Material: 325-mesh stainless steel screen
(engine fuel control wash flow filter)

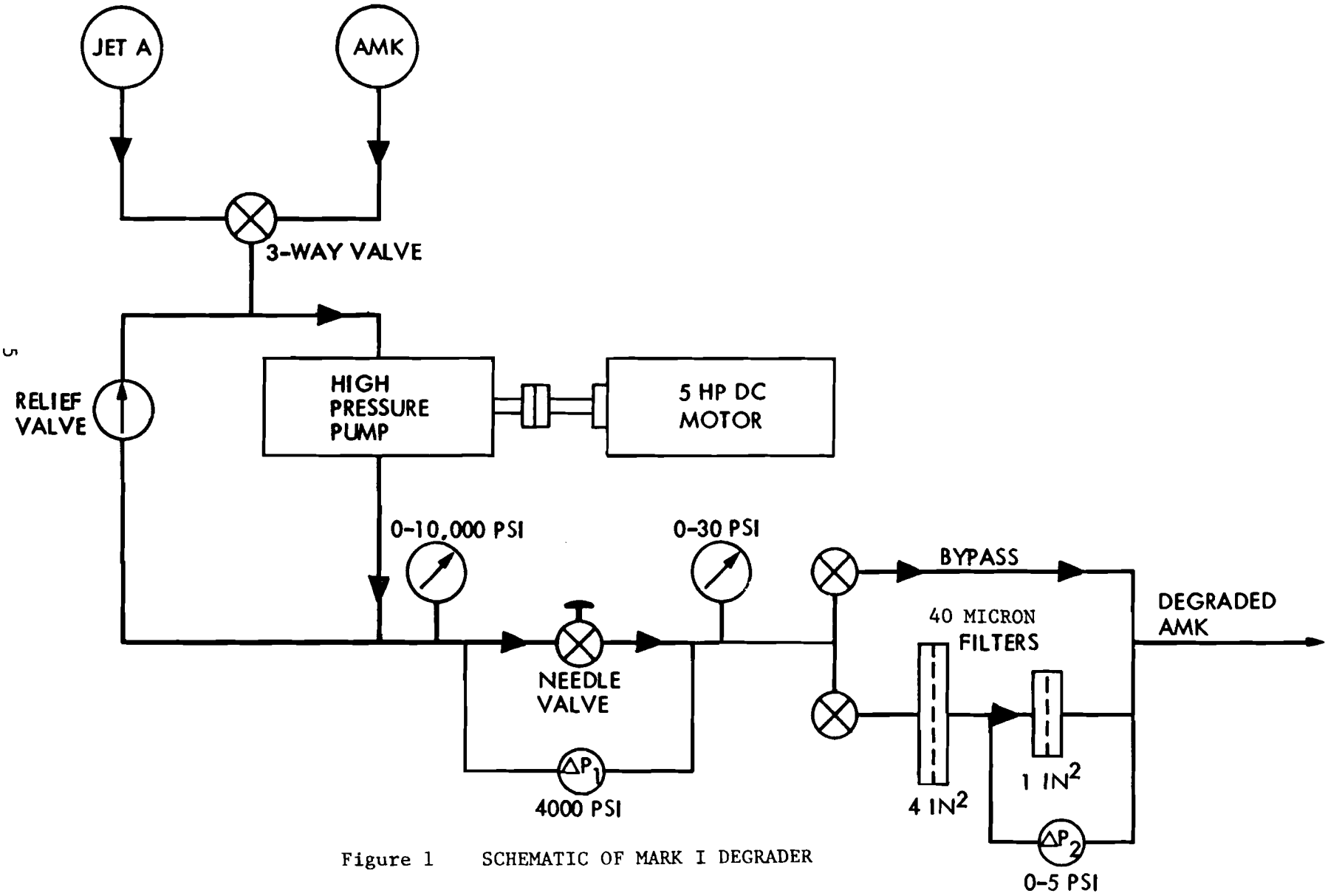


Figure 1 SCHEMATIC OF MARK I DEGRADER

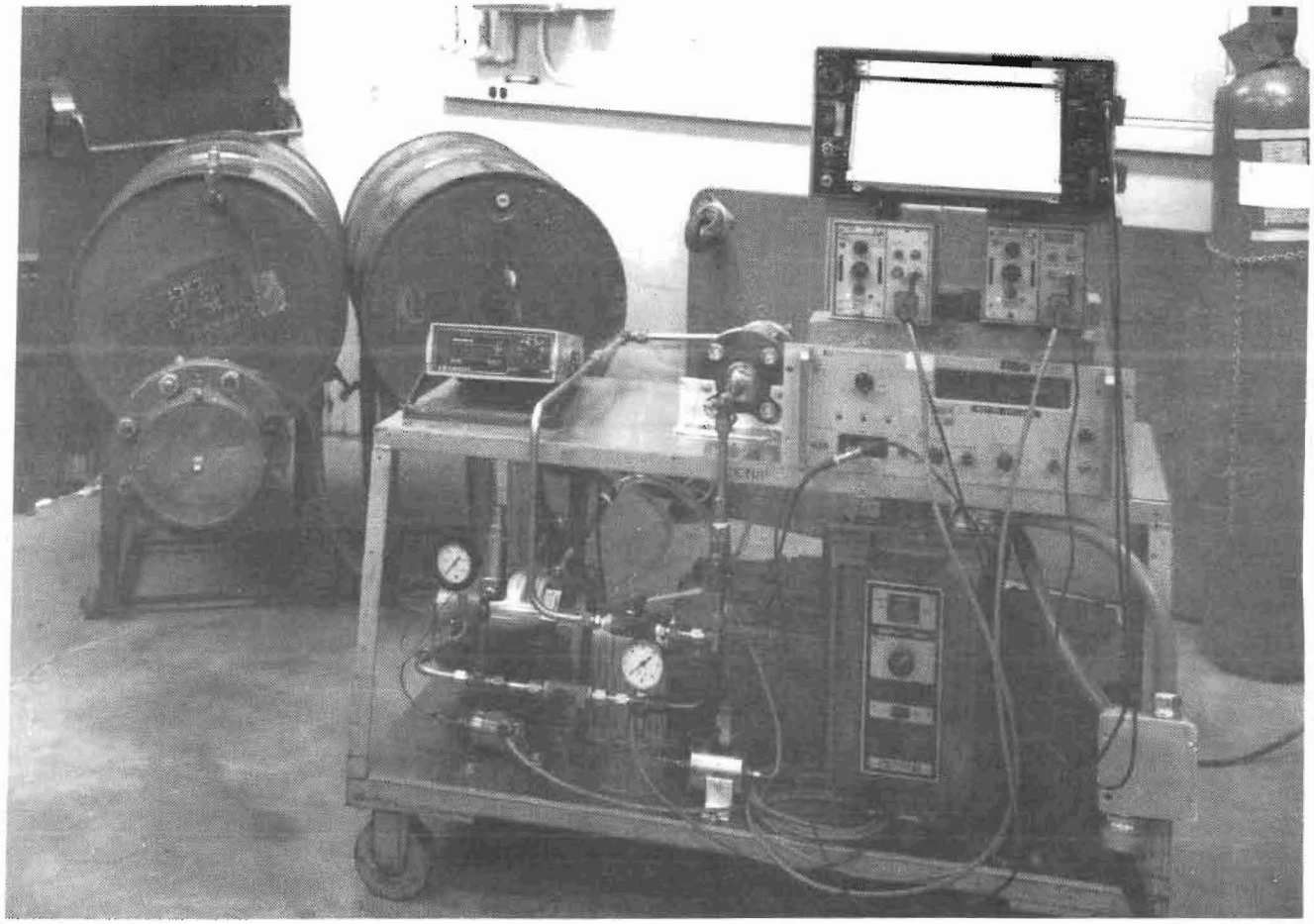

FIGURE 2. PHOTOGRAPH OF MARK I DEGRADER

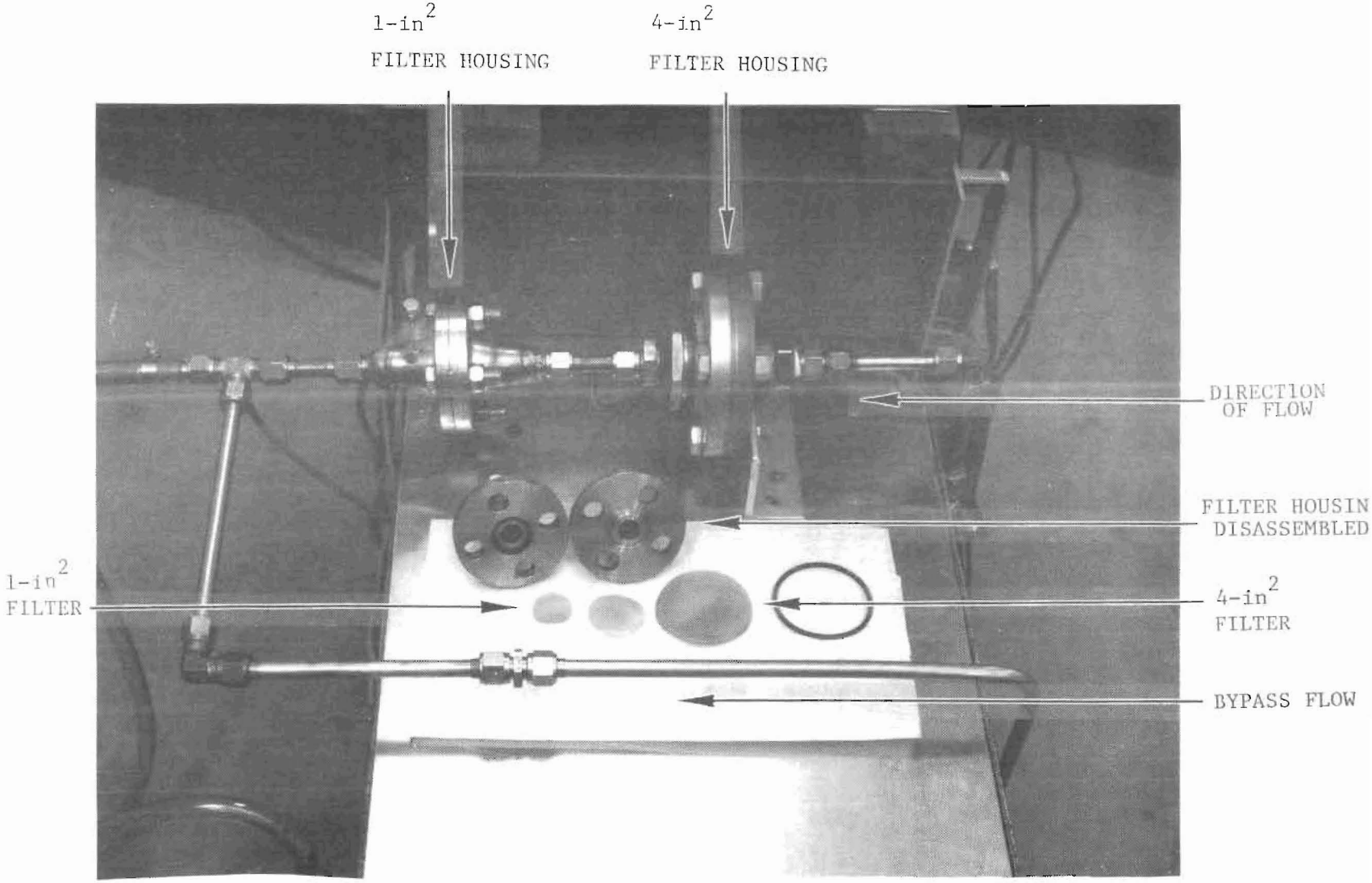


FIGURE 3. PHOTOGRAPH OF FILTER ARRANGEMENT

The circular filter elements were supported in specially designed housings which were machined from standard steel pipe flanges. The design of the filter housing was such that the filter elements were held in place by compression between two annular metallic surfaces, while the fuel leakage out of the housing was prevented by an O-ring.

The fuel flow rate through the system was set by simultaneously adjusting the needle valve opening and the pump speed to obtain the desired value of the needle valve pressure drop (4,000 psi) and the flow rate (1 gpm). The flow rate calibration was done by timed collection of degrader discharge in a calibrated beaker. Since the piston pump used here is a positive displacement device, the flow rate was insensitive to small changes in delivery pressure.

The outputs of both the high and low pressure transducers measuring respectively the pressure drop across the needle valve and the test filter were displayed on a strip chart recorder to detect any trends in the pressure drop behavior over relatively long test times. Presumably due to the accumulation of dirt in the tiny needle valve opening, periodic manual adjustments were necessary to maintain the needle valve pressure drop close to the desired value.

Degrader Design Improvements

Following the first series of tests with single pass degradation, it became apparent that design improvements were needed to solve the low-temperature degradation problems. These improvements were primarily designed to increase the fuel temperature prior to pressure throttling degradation by incorporation of the following three design features as shown schematically in figure 4:

1. A bypass loop was added to recirculate a fraction of the needle valve degraded fuel back to the piston pump inlet. The bypassed degraded fuel has a significantly higher temperature than the fuel temperature upstream of the needle valve because of the dissipation of the mechanical energy of the high pressure fuel in the throttling process. Mixing a fraction of this degraded fuel with the cold virgin AMK results in a mixture whose temperature is raised somewhat. (Data in table 6 illustrate these temperature ranges.)

2. A 500-watt electric heater was added in the bypass loop to simulate the engine oil-to-fuel heat exchanger. The heat energy added to the bypassed fuel at this point has the beneficial effect of further raising the temperature of the incoming cold fuel prior to degradation.

3. A counterflow heat exchanger was added before the pump inlet to transfer some of the energy of the hot, degraded fuel to the lower temperature mixture of the bypassed degraded fuel and the incoming cold virgin AMK.

To bypass and recirculate some of the degraded fuel while still maintaining a through flow of 1 gpm, the pump was run at its maximum speed of 1750 rpm. At this speed and a 4,000 psi pressure rise, the total measured flow through the pump was 1.62 gpm. Of this total flow that passed through the pump and the needle valve, 0.62 gpm was recirculated in the bypass loop and 1 gpm was allowed to leave the loop. The fraction of the flow recirculated was controlled by adjustments of the bypass and output control valves shown in figure 4. In order to render this flow split proportion

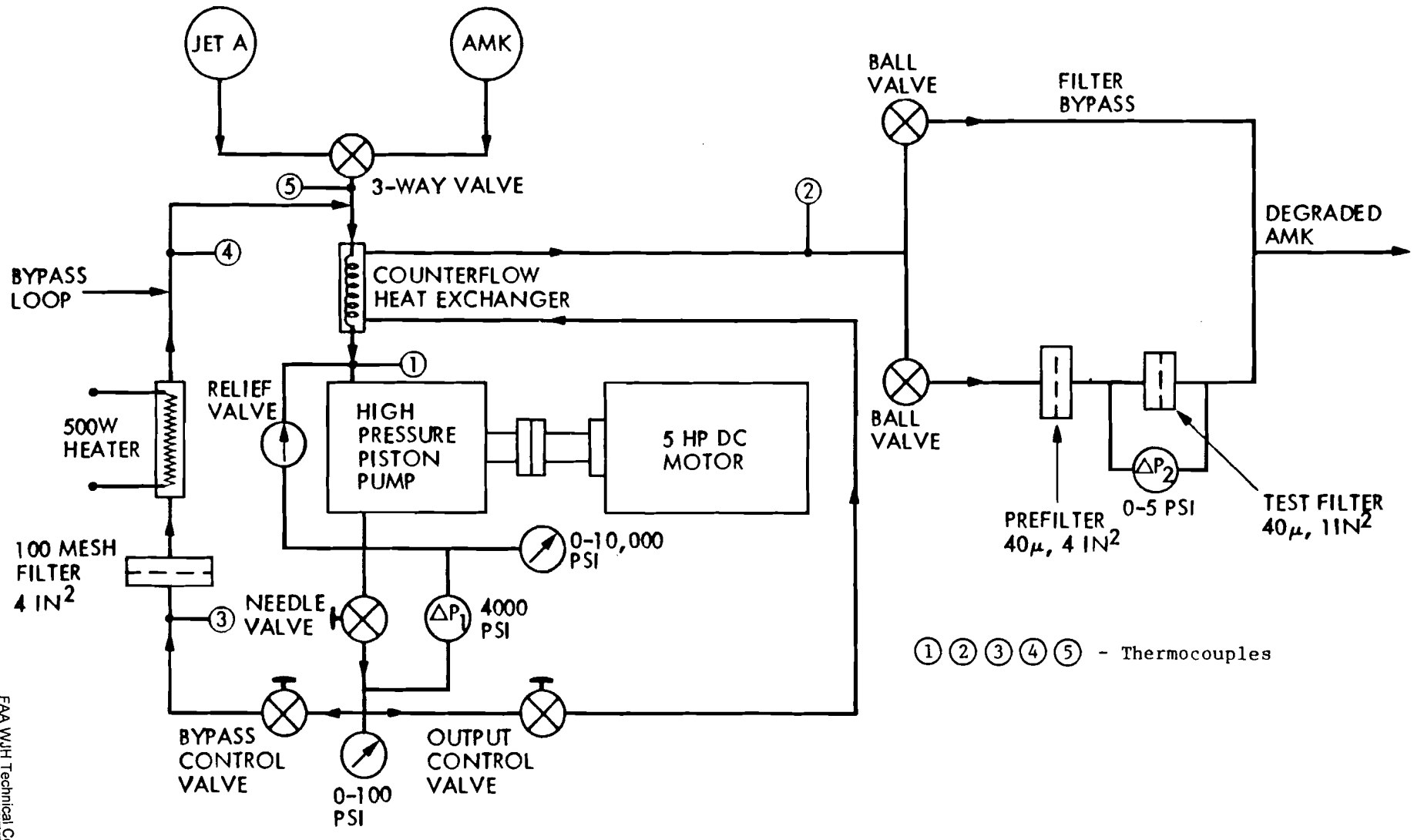


Figure 4 SCHEMATIC OF MARK II DEGRADER/FILTERABILITY APPARATUS



FAA WJH Technical Center
00090680

relatively insensitive to changing down-stream filter pressure drop, a pressure of approximately 50 psi was maintained in the line downstream of the needle valve and upstream of the bypass and output control valves.

A 4-in$^2$ frontal area filter screen of 100-mesh size was also placed in the bypass loop to filter out any metallic particles coming out of the pump and to keep them from re-entering the pump. The 500-watt heater was a 1/4-inch-diameter by 3-foot-length Calrod heating element, which was inserted in a 1/2-inch stainless steel tube and looped into a coil of 4 inches diameter for compactness. The bypass loop fuel flowed in the annular space between the central heating element and the 1/2-inch tubing wall.

The 1-gpm outflow from the modified degrader system was passed through the same test filter arrangement as discussed before for filterability tests.

The fuel temperature at various points in the degrader system were measured by a set of Chromel-Alumel thermocouples inserted into the fuel lines at locations shown in figure 4. An Omega Engineering 10-channel thermocouple readout with a built-in reference temperature compensation was used to monitor the temperatures at various locations.

During cold AMK degradation tests, the freshly blended AMK was chilled down to a desired temperature in the JPL low temperature fuel apparatus described in reference 8. The cold fuel was then supplied to the degrader via a 100-mesh fuel filter of a large frontal area (approximately 75 in$^2$). The latter filter was constructed from a 10-inch-diameter schedule 80 PVC flanges in a manner similar to that described for the test filter.

AMK Blending Apparatus

The 1-liter-per-minute inline blending setups used to produce AMK are presented in figures 5, 6, and 7. The first unit (figure 5) was used to produce control samples of AMK fuel at ambient temperature and samples for the fire test at low temperature.

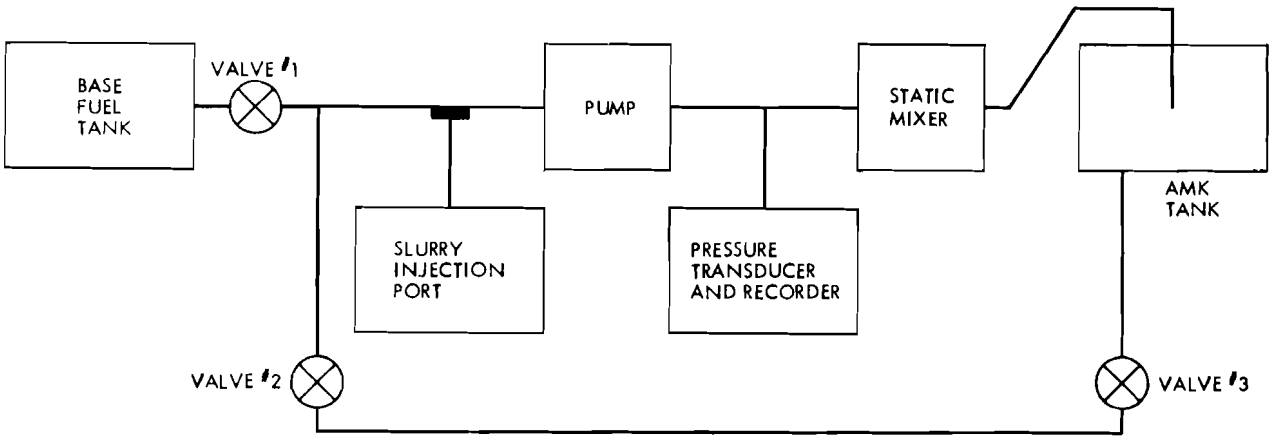


FIGURE 5 INLINE BLENDING APPARTUS

The inline blending system (figure 5) consists of a slurry injection port, a pump, and the mixing elements (static mixer and blender). The entire system is made from off-the-shelf components with the exception of the base fuel and AMK fuel tanks. The injection port is part of the B-D Luer-Lok automatic syringe refill kit. The pump drive module is a high flow rate, explosion-proof unit, Model RP-F manufactured by Fluid Metering Inc. (FMI), Oyster Bay, NY. The RP-F unit employs a 1/4-hp motor with a model RP-F-2 pump head module. The head material is made of 316 stainless steel with a sintered carbon cylinder liner material. The pump has a maximum flow rate of 16 gpm and a maximum pressure rating of 100 psi. The pump has a simplified positive displacement mechanism based on a valveless pumping mode and is recommended for handling semi-solid fluids and heavy slurries. The main component of the system consists of a Static Mixer[R] manufactured by the Kenics Corp. The device is simply a straight 1/4-inch stainless steel tube, 9 inches long with a series of fixed, helical elements enclosed within the tubular housing. The elements are fixed to the pipe wall, and the trailing edge of one element is attached to, and forms a right angle with, the leading edge of the next element. The helical design of the central element causes a transverse flow to arise in the plane normal to the pipe axis. As a consequence, fluid near the center of the pipe is rotated out toward the circular boundary, and vice versa. Radial mixing and multiple flow separation is achieved in this manner. The unit is an inline mixer having no moving parts and no external power requirements; in addition, the unit is amenable to quick changes, has low cost of operation, and has very low maintenance. The components of the inline blending system are assembled by flexible PVC tubing which gives some see-through capabilities to the system.

The low temperature blending apparatus (figures 6 and 7) was a modification of the setup described above. It was a thermally insulated, closed system, purged with nitrogen gas to prevent condensation of water during operation. The base fuel and the AMK receiving tanks were placed in a larger cooling tank, which used an acetone/dry ice mixture to obtain the desired temperature. The tank temperatures ranged from -30°C to about +40°C.

The system allowed for cooling of the base fuel to the desired temperature, blending and then holding the freshly blended AMK fuel at the same temperature. In addition, the system allowed for continuous turbidity monitoring of the AMK fuel quality.

The measurements were done with a model DRT-100 Turbidimeter manufactured by H. F. Instruments. The DRT-100 Turbidimeter is a continuous reading nephelometric instrument which measures reflected light from scattered particles in suspension and direct light passing through a liquid. The resulting ratioed optical signal is stabilized and amplified to energize a meter. The instrument provides a linear readout of turbidity (clarity) in nephelometric turbidity units. The data in this report are presented in Formazin Turbidity Units (FTU) because the DRT unit was referenced to factory Formazin calibration. Jackson Turbidity Units (JTU), FTU, and Nephelometric Turbidity Units (NTU) are interchangeable.

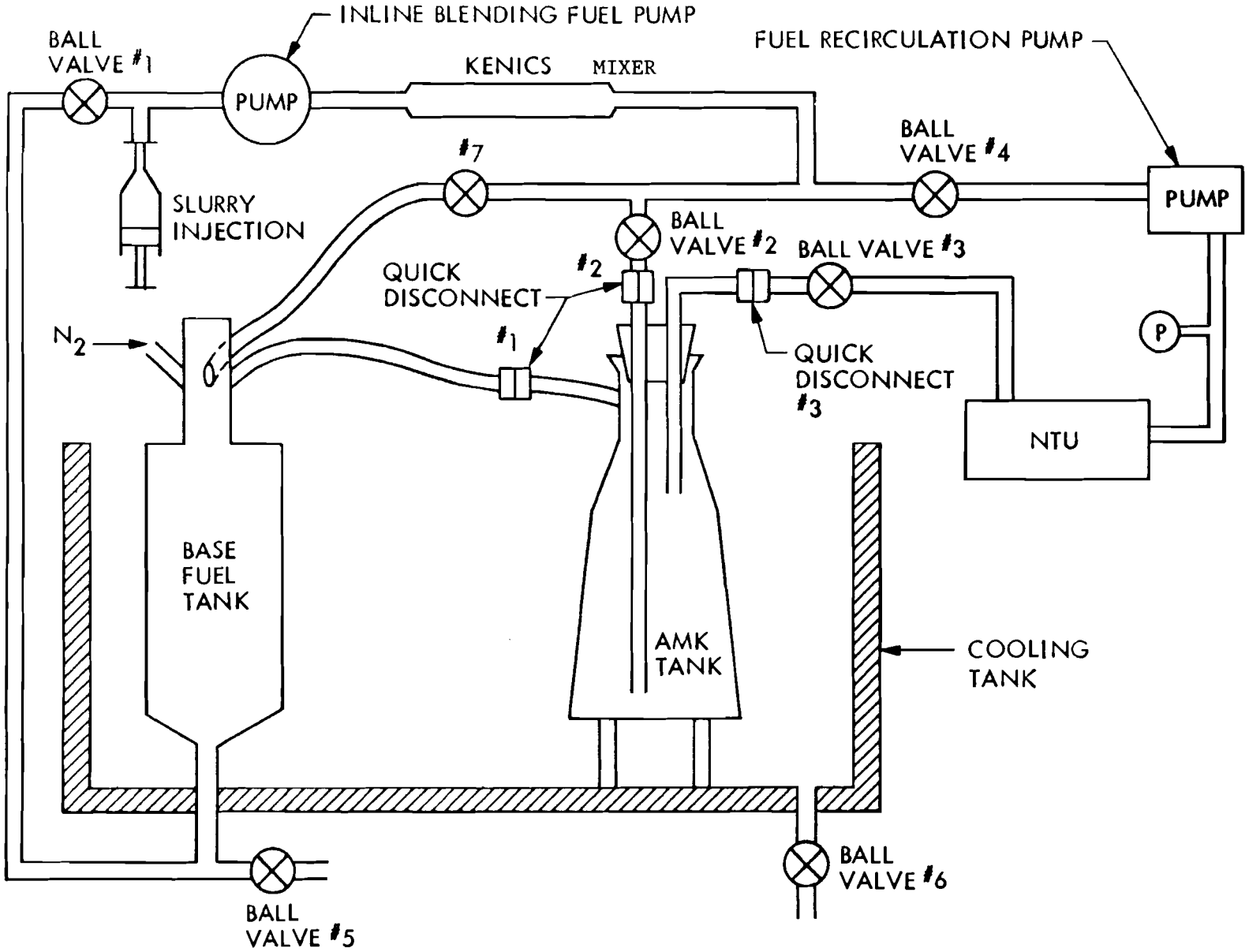


Figure 6 LOW TEMPERATURE INLINE BLENDING APPARATUS

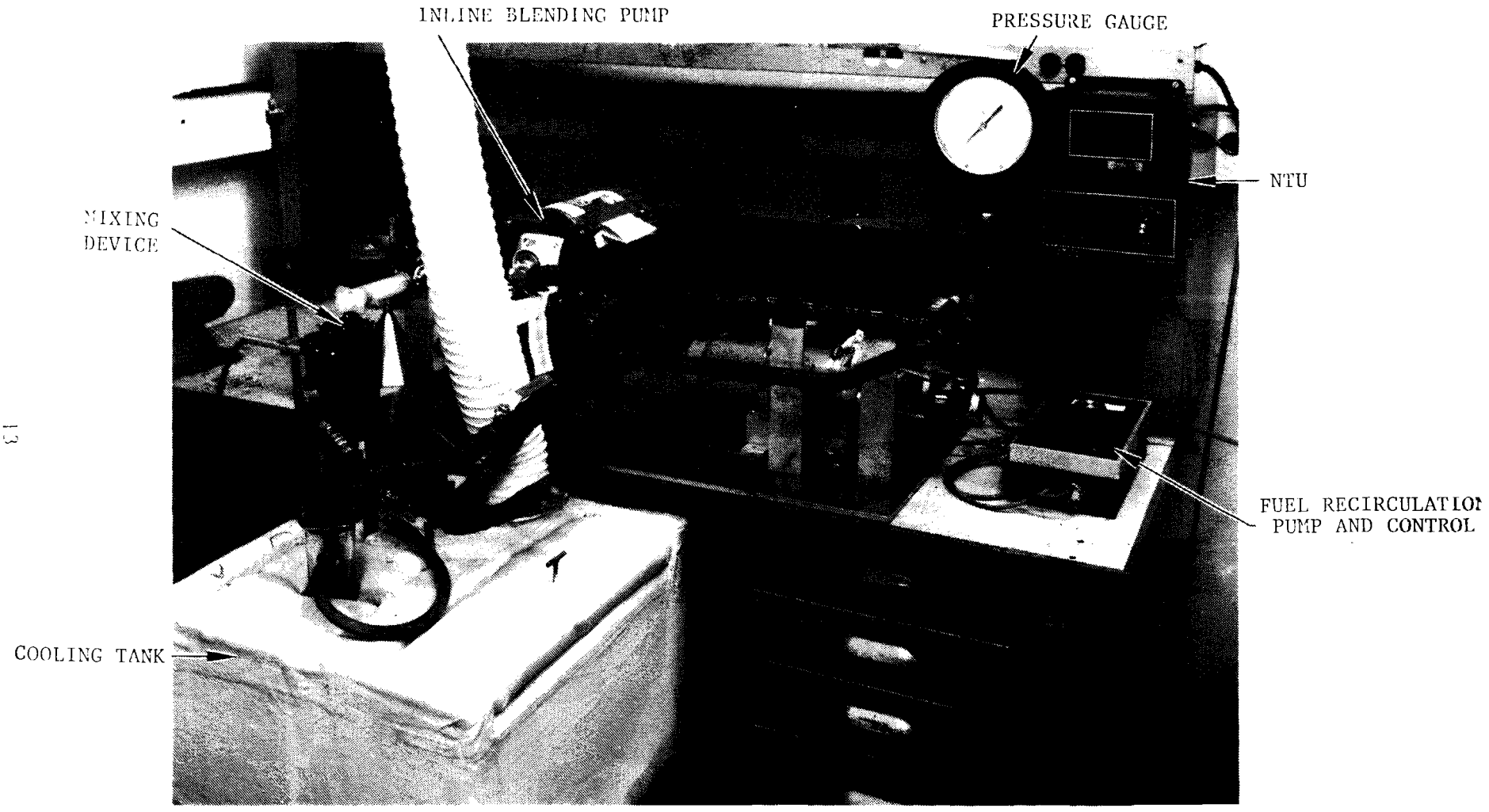


FIGURE 7. PHOTOGRAPH OF THE LOW TEMPERATURE INLINE BLENDING APPARATUS

## EXPERIMENTAL PROCEDURES

### AMK Degrader

Before the start of a test run, the entire system was purged with Jet A by running the pump full speed and keeping the needle valve fully open. The test and prefilters were then disassembled, and new circular filter elements cut from 325-mesh stainless steel screen were inserted. The filters were carefully assembled and installed in the degrader discharge line.

The system was then started and run full speed for several minutes on Jet A. The needle valve was slowly closed to attain the desired 4,000 psi pressure drop. The bypass and output control valves were adjusted until the desired flow split of 0.62 gpm bypass and 1.0 gpm through flow was achieved while maintaining approximately 50 psi pressure upstream of these valves. The through flow was measured by timed collection in a calibrated beaker. For low temperature AMK runs, the 500-watt heater in the degrader bypass loop was turned on. For ambient temperature runs the heater was kept off. The system was allowed to operate under these conditions until steady state temperatures were obtained at various measuring stations. This took approximately 5 minutes. The pressure drop across the test filter (with bypass valve closed, so that all the flow passed through the filters) and across the needle valve were continuously monitored on the strip chart recorder. As the fuel temperatures at various points climbed during the initial 5 minutes, the pressure drop across the test filter decreased slightly due to the decreasing viscosity of Jet A. A steady-state pressure drop value was attained after the initial transient. This baseline reference pressure drop value was noted for later comparison with degraded AMK results.

Once the steady-state reference pressure drop across the test filter for Jet A was determined, the flow was set to filter bypass in preparation for the AMK degradation run. The three-way valve at the degrader inlet (figure 4) was switched from Jet A to AMK (either ambient temperature or cold) and the needle valve was adjusted to maintain 4,000 psi pressure drop. The degrader flow was allowed to bypass the filters until steady-state temperatures were obtained at various points in the system. For ambient temperature AMK, the time to establish this new steady-state was less than a minute. For low temperature AMK, a 5-minute transient was noted until steady-state temperatures were obtained. At this point, the bypass valve on the filters was closed and all the degraded AMK flow (1 gpm) was allowed to pass through the filters. The pressure drop across the test filter was closely monitored.

For ambient temperature AMK, the pressure drop across the test filter attained a value slightly larger than that obtained with Jet A and remained constant from the beginning when the flow through the filter was switched on. At low temperatures, however, the pressure drop increased with time (after the switch was made) and finally reached an asymptotic value. Once a constant pressure drop across the test filter was obtained, the needle valve pressure drop was lowered in steps of 1,000 psi by opening the needle valve and without changing pump speed or the flow split proportion. The steady-state pressure drop across the test filter for each value of needle valve pressure drop was registered, and the transitional behavior from one condition to the next was also obtained from the strip chart record. The procedure was continued until the pressure drop across the test filter became too large to be handled by the 5-psi transducer. Test filter pressure drop data were compared for different initial AMK temperatures.

At the end of a test run, the filter elements were removed from the housing and examined.

AMK Fuel Blending

Using the apparatus on figure 5, the AMK blending consisted of weighing the appropriate amount of slurry in a 50 mL B-D Plastipak[R] Luer-Lok tip disposable syringe and then locking the syringe into the injection port. Care was taken that the slurry did not contact the fuel; any wetting of the slurry with jet fuel at this stage causes premature swelling of the slurry at the wetted surface and formation of transparent gel which make the consequent dispersion of the polymer particles very difficult. With valves numbers 1, 2, and 3 closed, the required amount of jet fuel was placed in the tank. After the pump was turned on, value number 1 was opened. With the opening of the valve, the slurry from the syringe is carefully injected in the fuel line. The slurry injection was accomplished in 5-7 seconds. The AMK is collected and allowed to equilibrate for the desired length of time. This blender was used to produce 1 gallon of AMK fuel per blending run. The Jet A fuel was carefully weighed in a 1-gallon polypropylene bottle and half of it was placed in the base fuel holding tank. The bottle with the balance of the Jet A was then used to receive the freshly blended fuel (AMK tank ). Care was taken to mix the Jet A and freshly blended fuel during the blending run. The end of the blending was recorded and considered the start of the polymer equilibration process.

This apparatus and procedure was used to produce AMK fuel at ambient temperatures as well as 1-gallon samples blended at low temperatures for the Mini-wing shear fire tests. For these cold samples, the procedure was modified by first cooling 1 gallon of the Jet A base fuel to a desired blending temperature by using acetone/dry ice cooling bath. Half of the Jet A was placed in the receiving AMK tank, covered with a lid, and received a continuous nitrogen purge during the blending. The second half of the Jet A was put into the base fuel tank and purged with nitrogen. The polymer slurry was then blended, and the AMK fuel was collected in the receiving AMK tank which was then placed back in the cooling bath for equilibration. The quality of these fuel samples and the degree of polymer equilibration was evaluated by the Mini-wing shear fire test.

The influence of the base fuel temperature on the polymer dissolution rate was evaluated using the blending unit shown schematically in figures 6 and 7.

Briefly, the blending procedure consisted of first purging the entire system with dry nitrogen gas and then placing 1 gallon of Jet A fuel in the base fuel tank. The system was then closed and the head space above the fuel was purged again with nitrogen. The base fuel tank had a pressure relief value set at 0.5 psi which allowed for partial positive nitrogen gas pressure over the fuel, if desired. The cooling tank was then filled with acetone and carefully brought down to the desired temperature with the addition of dry ice. The tank was then covered with a lid (see figure 7) which had provisions for stirring the cooling fluid as well as thermometer well for measuring the temperature.

When the base fuel attained the desired blending, temperature ball valve numbers 1 and 7 were opened; valve numbers 2, 3, 4, and the injection port were closed, and the blender pump was turned on. The fuel was circulated through the blending loop until the base fuel reached the temperature of the cooling bath.

Dry ice was occasionally added to keep the cooling fluid at the test temperature. Ball valve number 2 was then opened, number 7 was closed, and about 25 percent of the cold base fuel was transferred in the AMK tank. The fuel recirculation pump was then stopped, the slurry syringe was placed in the slurry injection port, and blending was started. At the end of the blending run, the inline blending pump was shut off, and ball valve number 2 was closed. The AMK fuel temperature at this point was the same or very close to the temperature of the starting base fuel.

For the turbidity measurement, which followed the end of blending, the freshly blended AMK fuel was passed continuously through the cell of the nephelometer indicated as NTU box in figure 6. This was done two ways. With valves number 2, 3, 4 open and the fuel pump in the NTU loop on, the AMK fuel was slowly passed through the turbidimeter and subsequently returned to the AMK tank. The second method was to open quick disconnect 3; open valves 2, 3, 4; bypass the pump; and force the AMK fuel through the turbidimeter cell by pressurizing the tank with nitrogen via the base fuel tank. For both methods, the flow rate through the cell was adjusted to about 10 mL/minute. The NTU measurements were recorded and compared for different base fuel temperature blending.

## RESULTS AND DISCUSSION

### Degrader Experiments

The first series of degradation/filterability experiments were conducted with the mark I degrader (figures 1 and 2). All degradation tests were run with a needle valve pressure drop of 4,000 psi. The test parameters of this series of experiments are listed in table 2. The test filter pressure drop data are summarized in table 3.

The first two rows of table 3 contain baseline filter pressure drop data for Jet A. Notice that the Jet A pressure drop $P_2$ across the test filter increased slightly from 0.13 to 0.16 psi when the needle valve pressure drop was increased from 30 psi to 4,000 psi. This is contrary to what would be expected since the fuel temperature at the test filter is higher when a pressure drop of 4,000 psi is applied across the needle valve. Consequently, the fuel viscosity at the test filter is lower and this should result in smaller pressure drop when $P_1$= 4,000 psi. The slight increase in the pressure drop may have been caused by cavitation in the fuel line immediately downstream of the needle valve when the fuel was throttled from the high pressure of 4,000 psi gauge to nearly atmospheric pressure. This was suspected from observation of air bubbles in the transparent discharge line. This effect was not observed when Jet A, which had already undergone deaeration by the throttling process, was reused after cooling down to ambient temperature.

Run numbers 1, 2 and 3 are for ambient temperature AMK, both equilibrated and freshly blended. Run 1 was conducted with ICI batch blended AMK, batch RMH 1-241. The test filter pressure drop was slightly more than twice the Jet A pressure drop (see table 3). More importantly, the pressure drop across the test filter was steady over a total test time of 50 minutes and did not show any signs of increasing with time.

Ambient temperature degradation tests with AMK blended inhouse at JPL (run numbers 2 and 3) using an inline blender (reference 9) showed similar results. The

TABLE 3

DEGRADATION/FILTERABILITY DATA
(Mark I Degrader Tests)

| RUN# | DATE | FUEL | $(\Delta P)_1$ psi | $T_{in}$ °C | $(\Delta P)_2$ psi |
|---|---|---|---|---|---|
| 0 | 5/15/84 | Jet A | 30 | 22 | 0.13 |
| 0 | 5/15/84 | Jet A | 4000 | 22 | 0.16 |
| 1 | 5/10/84 | ICI batch blended AMK RMH 1-241 | 4000 | 25 | 0.35 |
| 2 | 5/11/84 | Freshly Blended $\tau_o$ = 20 Min JCK 247-2 Texaco Jet A | 4000 | 22 | 0.27 |
| 3 | 5/13/84 | Freshly Blended $\tau_o$ = 48 Hrs JCK 247-2 Texaco Jet A | 4000 | 23 | 0.22 |
| 4 | 5/15/84 | Freshly Blended $\tau_o$ = 6 Hrs JCK 247-2 Texaco Jet A | 4000 | -22 | $\frac{d(\Delta P)_2}{dt} = 3.3 \frac{psi}{min}$ |

$T_{in}$ is the virgin AMK supply temperature to the degrader system.
$\tau_o$ is the time elapsed between completion of blending and beginning of degradation.

slurry lot for this JPL blended fuel was JCK 247-2 and the base fuel was Texaco Jet A received from Burbank airport. Runs 2 and 3 were conducted with the same blend 20 minutes and 48 hours after blending, respectively. The test filter pressure drops $\Delta P_2$ in these two runs were steady and were about twice than that for Jet A (table 3). The run duration was 50 minutes.

The final single pass degradation test (run 4) was conducted with low-temperature, freshly blended AMK. Same slurry lot (JCK 247-2) and the base fuel were inline blended. The freshly blended AMK was then cooled in the JPL low-temperature

apparatus for approximately 6 hours, at which point a nearly uniform temperature of -25°C was attained in the apparatus. The cold AMK was supplied to the degrader directly from the low-temperature apparatus via a large frontal area 100-mesh filter described earlier and a 15-foot-long, 1/2-inch tygon supply line. At the inlet to the degrader, the temperature (Tin) was measured at -22°C. After startup on Jet A, the degraded AMK flow was initially allowed to bypass the test filter. After a steady temperature of -22°C at the degrader inlet was achieved, the switch was made from bypass to filtration mode. The test filter pressure drop started climbing immediately and the rate of pressure drop increase was estimated from the strip chart record at 3.3 psi/min.

In summary, no difficulty was encountered in single pass degradation of freshly blended AMK at 4,000 psi pressure drop across the needle valve at ambient temperature. The pressure drop across the wash flow filter at 1 gpm/in$^2$ volume flux of degraded AMK measured slightly higher than that for Jet A. However, no evidence of increasing pressure drop with time was noted; i.e., no filter gellation was observed for ambient temperature, freshly blended AMK. Under an identical set of experimental conditions, when the same AMK fuel was supplied at initial temperature -22°C, the filter pressure drop increased sharply with time and led to gel formation on the filter.

TABLE 4

DEGRADATION/FILTERABILITY DATA
FUEL SAMPLE CHARACTERIZATION
(Mark I Degrader Tests)

| RUN # | DATE | FUEL | FILTER RATIO VIRGIN | FILTER RATIO DEGRADED | t* |
|---|---|---|---|---|---|
| 1 | 5/10/84 | ICI Batch Blended AMK, RMH 1-241 | 30 | 1.36 | 24 hrs. |
| 2 | 5/11/84 | Freshly Blended JCK 247-2 Burbank Jet A | 54 (1.5 hr)** | 16.5 | 1 hr. |
| 3 | 5/13/84 | Freshly Blended JCK 247-2 Burbank Jet A | 58 (48 hrs)** | 1.1 | 30 min. |
| 4 | 5/15/84 | Freshly Blended JCK 247-2 Burbank Jet A | 58 (5-1/2 hrs)** | 9.1 | 5 min. |

*t is time elapsed between degradation and filter ratio test.
**Times between completion of blending run and beginning of degradation.

To illustrate the point made earlier about the ineffectiveness of the filter ratio test in assessing the filterability of freshly blended and degraded AMK, the filter ratios of the degraded samples from runs 1 through 4 (described in table 3) are listed in table 4. The fourth column lists filter ratio of the AMK before degradation, measured at times indicated in the parentheses. The fifth column shows the filter ratio of the four fuel samples after degradation. The last (sixth) column lists the time after degradation when the filter ratio measurement was made. Notice that for runs 1 and 3, in which AMK to be degraded was equilibrated, the filter ratios corroborate inline filterability measurements of table 3 even when the filter ratio measurement was made 30 minutes or more after degradation. However, for test 2, conducted with freshly blended AMK, the filter ratio measurement of 16.5 obtained 1 hour after degradation, gives a pessimistic assessment of the filterability of the fuel. In reality, the same degraded fuel showed excellent filtration characteristics in inline filterability tests as shown in table 3.

Results For Improved Degrader

As discussed earlier, to improve the low-temperature AMK degradation performance, several modifications were made to the basic Mark I degrader design shown in figure 1. The improved design (Mark II) is shown schematically in figure 4.

Test filter pressure drop data are shown in figures 8 to 12. The abscissa is the test time ( $\tau$) in minutes following the start of degraded AMK flow through the test filter. Two parameters are plotted in these figures: (1) the needle valve pressure drop $\Delta P_1$ controlled by the operator and (2) the corresponding pressure drop across the test filter normalized by the baseline pressure drop across the same filter with identical Jet A flow through the degrader. The latter ratio will be termed Inline Filterability Ratio (IFR). The test parameters and AMK specifications are summarized in table 5. The steady-state temperature data acquired during three of the tests with Mark II degrader are tabulated in table 6. It was noted that at $\Delta P$ = 4000 psi, the temperature rise across the pump and the needle valve was approximately 19°C due to the dissipation of mechanical energy, while that across the heater was approximately 7°C. The combined effect of fuel recirculation and heating was to raise the fuel temperature from degrader system inlet to pump inlet by about 24°C in low-temperature degradation runs.

Run 5 was conducted with ambient temperature (20°C) AMK blended 3 hours prior to degradation using JCK 16-98-1 slurry and Texaco/Burbank Jet A fuel. The results are shown in figure 8. For all ambient temperature AMK degradation tests, the heater in the bypass loop was not activated. The ratio of the through flow and the recirculated flow of degraded fuel was kept fixed at 1 gpm: 0.62 gpm as the needle valve pressure drop was altered. For the first 13 minutes of this degradation run, the needle valve pressure drop was maintained at 4,000 psi. The corresponding pressure drop across the test filter was close to the pressure drop obtained with Jet A. Next, decreasing the needle valve pressure drop $\Delta P_1$ to 3,000 psi had a very slight effect on the test filter pressure drop $\Delta P_2$. This was true even when the needle valve pressure drop $\Delta P_1$ was decreased to 2,000 psi. At $\Delta P_1$ = 1,000 psi, $\Delta P_2$ increased noticeably and the IFR value increased to more than 2.0. Notice that the approach to the new equilibrium IFR value as $\Delta P_1$ which was reduced from 2,000 to 1,000 psi was gradual. However, once the asymptotic value of new IFR was reached, no increase in $\Delta P_2$ indicative of gradual filter plugging due to gellation was observed. When $\Delta P_1$ was reduced further to 500 psi, the test filter pressure drop $\Delta P_2$ increased dramatically,

but still achieved an asymptotic steady value of IFR 17.5. Thus even with a relatively low value of needle valve pressure drop $\Delta P_1$, the test filter pressure drop $\Delta P_2$ achieved a high but stable value and did not result in total plugging as would be indicated by a continuously increasing $\Delta P_2$.

TABLE 5

LIST OF TESTS WITH MARK II DEGRADER

| RUN NO. | AMK FUEL SPEC. | $Q_{th}$(1) gpm | $Q_b$(2) gpm | $\dot{q}$(3) kw | $T_{in}$(4) °c |
|---|---|---|---|---|---|
| 5 | Freshly Blended JCK 16-98-1 Slurry Burbank/Texaco Jet A | 1 | 0.6 | 0 | 20 |
| 6 | ICI batch blended AMK RMH 1-240 | 1 | 0.6 | 0 | 20 |
| 7 | Freshly Blended JCK 16-95-2 Slurry Burbank/Texaco Jet A | 1 | 0.6 | 0.5 | -33 |
| 8 | Freshly Blended JCK 16-95-2 Slurry Burbank/Texaco Jet A | 1 | 0.6 | 0 | 22 |
| 9 | Freshly Blended JCK 16-95-2 Slurry Burbank/Texaco Jet A | 1 | 0.6 | 0.5 | -6 |

(1) Degrader through flow

(2) Degrader bypass flow

(3) Bypass loop heater power

(4) Virgin fuel temperature at degrader system inlet

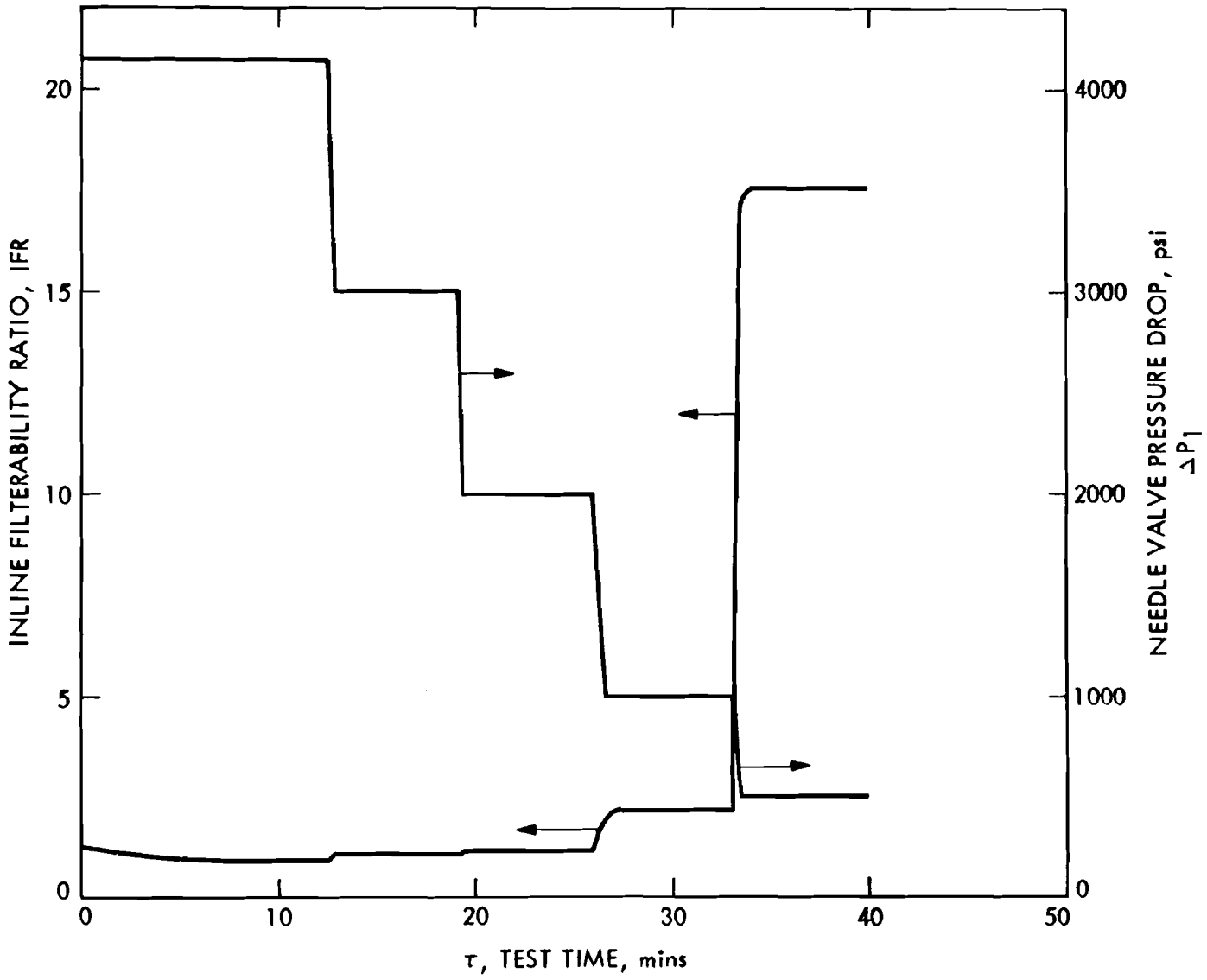


Figure 8 FILTRATION CHARACTERISTICS, TEST NO. 5
(SEE TABLE 5)

TABLE 6

MARK II DEGRADER STEADY-STATE TEMPERATURE DATA

Degrader Through Flow: 1.0 gpm
Degrader Bypass Flow: 0.62 gpm
Bypass Fraction: 0.375
Heater Power: 500 W

| Run No. | Heater | $\Delta P_1$ | Temperature in °C at TC#* | | | | |
|---|---|---|---|---|---|---|---|
| | on/off | psi | 1 | 2 | 3 | 4 | 5 |
| 5 | off | 4000 | 31 | 48 | 51 | 50 | 20 |
| 5 | off | 3000 | 29 | 42 | 44 | 44 | 20 |
| 5 | off | 2000 | 26 | 35 | 37 | 37 | 20 |
| 5 | off | 1000 | 24 | 29 | 30 | 30 | 20 |
| 7 | on | 4000 | -9 | +6.5 | +9.5 | +16 | -33 |
| 9 | on | 4000 | +18 | +32 | +37 | +44 | -6.0 |

*Thermocouple locations are shown in figure 4.

A similar ambient temperature degration test was repeated in test 6 with an ICI batch blended fuel (RMH 1-240) and the results are shown in figure 9. The duration in this case was not as long due to limited quantity of available fuel. The equilibrium IFR values corresponding to the four values of $\Delta P_1$ were slightly larger than those for test 6. Also, the approach times to attain a new equilibrium IFR valve following a change in $\Delta P_1$ were longer.

Test 7 was with low-temperature AMK freshly blended from JCK 16-95-2 slurry. The AMK was chilled for 5 hours in the JPL low-temperature apparatus immediately after blending. The results are shown in figure 10. The supply temperature was -33°C. The 500-watt heater was on during this test. At $\Delta P_1$ of 4,000 psi the test filter pressure drop $\Delta P_2$ increased with time, but asymptotically approached a steady IFR value of 3.5 after about 10 minutes of operations. At $\tau$ = 14 minutes, $\Delta P_1$ was reduced to 3,000 psi. Here $\tau$ denotes time elapsed after beginning of filtration test. This led to a dramatic increase in $\Delta P_2$ with a response time of 15 minutes. However, after this 15 minute transient, the IFR value settled at about 17 and did not show any signs of gradual filter plugging. The $\Delta P_1$ value was not decreased any further in this test.

At $\tau$ =35 minutes, $\Delta P_1$ was increased back up to 4,000 psi. This resulted in IFR slowly relaxing back to the initially observed equilibrium value of 3.5 as shown in figure 10.

Test 8 was with ambient temperature, freshly blended AMK using JCK 16-95-2 slurry. Degradation was carried out approximately 1/2 hour after completion of the blending run. The behavior in this test was very similar to that observed in test 5 which used JCK 16-98-1 slurry. The pressure drops in test 8 were slightly higher than those observed in test 5. For example, when $\Delta P_1$ was dropped to 650 psi, IFR

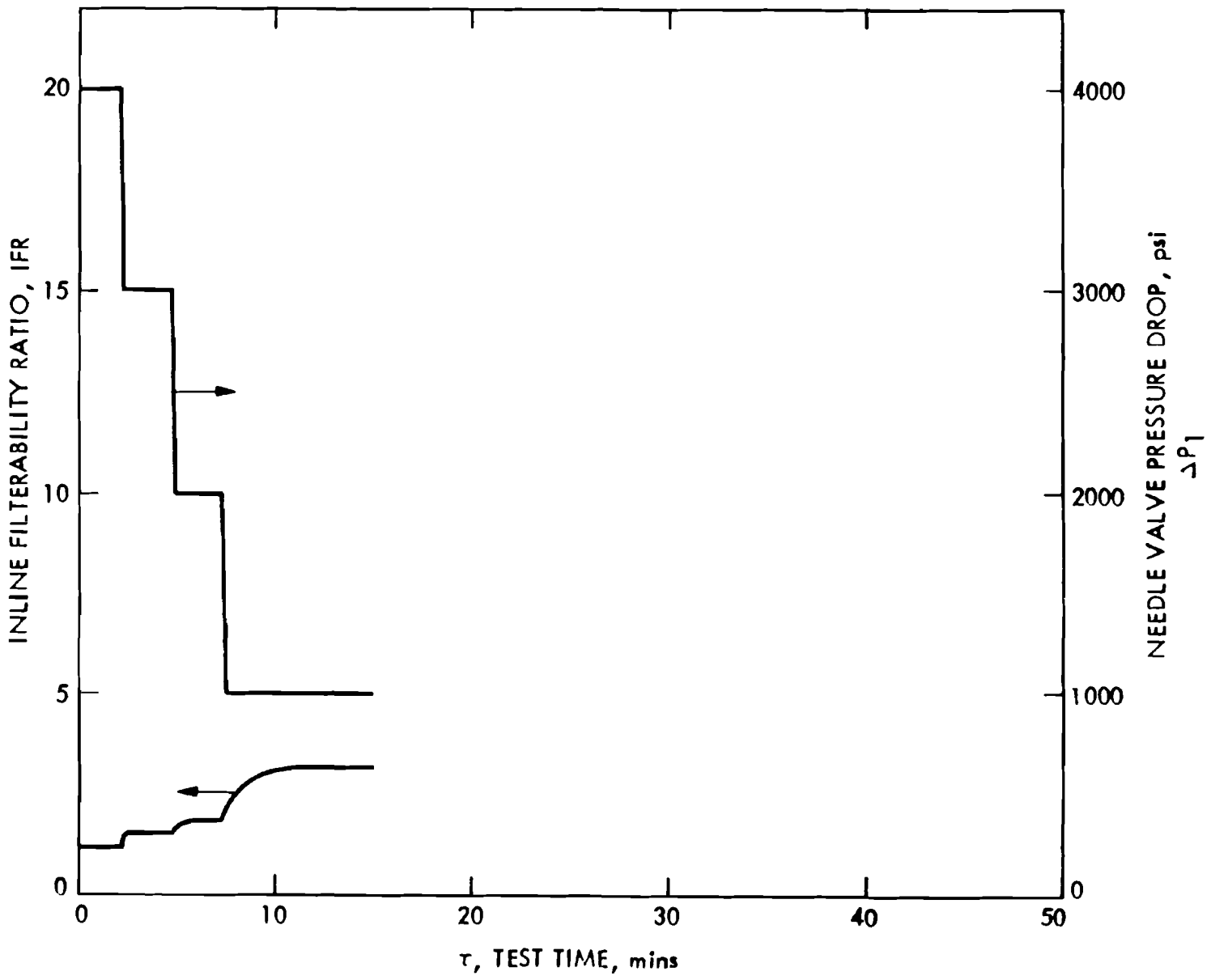


Figure 9 FILTRATION CHARACTERISTICS, TEST NO. 6
(SEE TABLE 5)

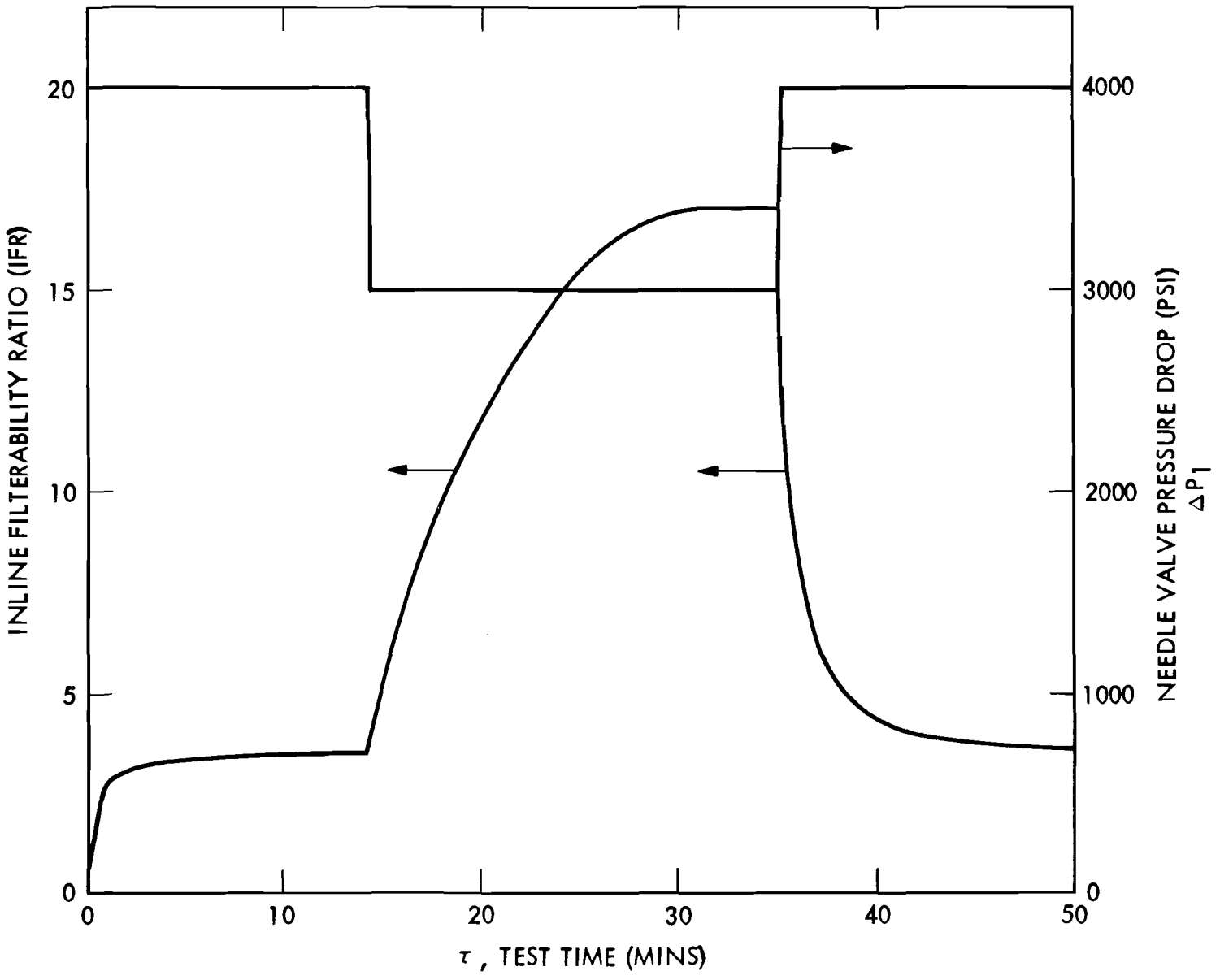


Figure 10 FILTRATION CHARACTERISTICS, TEST NO. 7
(see TABLE 5)

shot up to 32, in contrast to test 5 where an IFR of 17.5 was attained for $\Delta P_1$=500 psi. The results are shown in figure 11.

Test 9 was conducted using the same AMK fuel as in test 8 (using JCK 16-95-2 slurry) however, the fuel temperature was -6°C. Unfortunately, due to limited quantity of fuel available, data could be obtained only for $\Delta P_1$= 4,000 psi as shown in figure 12. The IFR value for this test was about 1.4, showing acceptable filterability.

The second series of AMK degradation tests with the Mark II degrader demonstrated the success of the concepts of recirculation and heat addition in overcoming low-temperature AMK degradation problems. The low-temperature degradation performance may be improved further simply by increasing the fraction of the degraded fuel recirculated and by increasing heat addition in the bypass loop. The degrader power requirement for the results reported herein at 37.5 percent recirculation and 4,000 psi needle valve pressure drop would be 44.7 kw-s/liter or 3.78 hp/gpm. This power requirement is based on 1 gpm through flow from the degrader while the pump handles 1.62 gpm (through flow + bypass flow) at 4000 psi $\Delta P_1$, i.e., a bypass fraction of 37.5 percent. If the bypass fraction is increased to 50 percent, while maintaining $\Delta P_1$= 4,000 psi, the corresponding power requirement would be 55.2 kw-s/liter or 4.67 hp/gpm.

Blending Experiments

The preliminary blending runs were made using polymer slurry lot JCK 14-247-2 in 18.9% aromatics content Jet A fuel. Base fuel temperatures for these runs were kept at 0-2°C, 10°C, 22°C, and 40°C. The freshly blended AMK fuel was passed through the nephelometer cell using the pump in the NTU loop of the system (see figure 6). It was found that the pump head was causing an increase in the fuel temperature and also an additional mixing which was aiding the dissolution. These factors were eliminated by bypassing the pump and using nitrogen gas pressure from the base fuel tank to transport the fuel. After the turbidimeter, the fuel was collected at the quick disconnect number 3.

The observations from these preliminary runs show that the lower the base fuel temperature, the longer it took for the freshly blended AMK fuel to equilibrate and obtain the required characteristics. It was also found that at 40°C base fuel blending temperature, the dissolution of the polymer as indicated by the turbidity values was very fast (3-5 minutes), but the fuel had poor antimisting properties as indicated by the fire test at that temperature. To further evaluate this problem, a series of blending runs using the blender units shown on figure 5 and 6 were made using the same slurry and Jet A base fuel. The data are presented in table 7.

These tests confirmed that at temperatures above 30°C, there was a partial loss of fire protection capability and above 33°C, the AMK fuel had minimal fire protection capability, as rated by the Mini-wing shear fire test. These fire tests were repeated using ICI blended AMK fuel (RMH-1-246) with similar results.

It was also found that at blending, equilibration and fire test temperatures below 0°C the AMK fuel failed to provide adequate fire protection in the desired time of 15-20 minutes after blending.

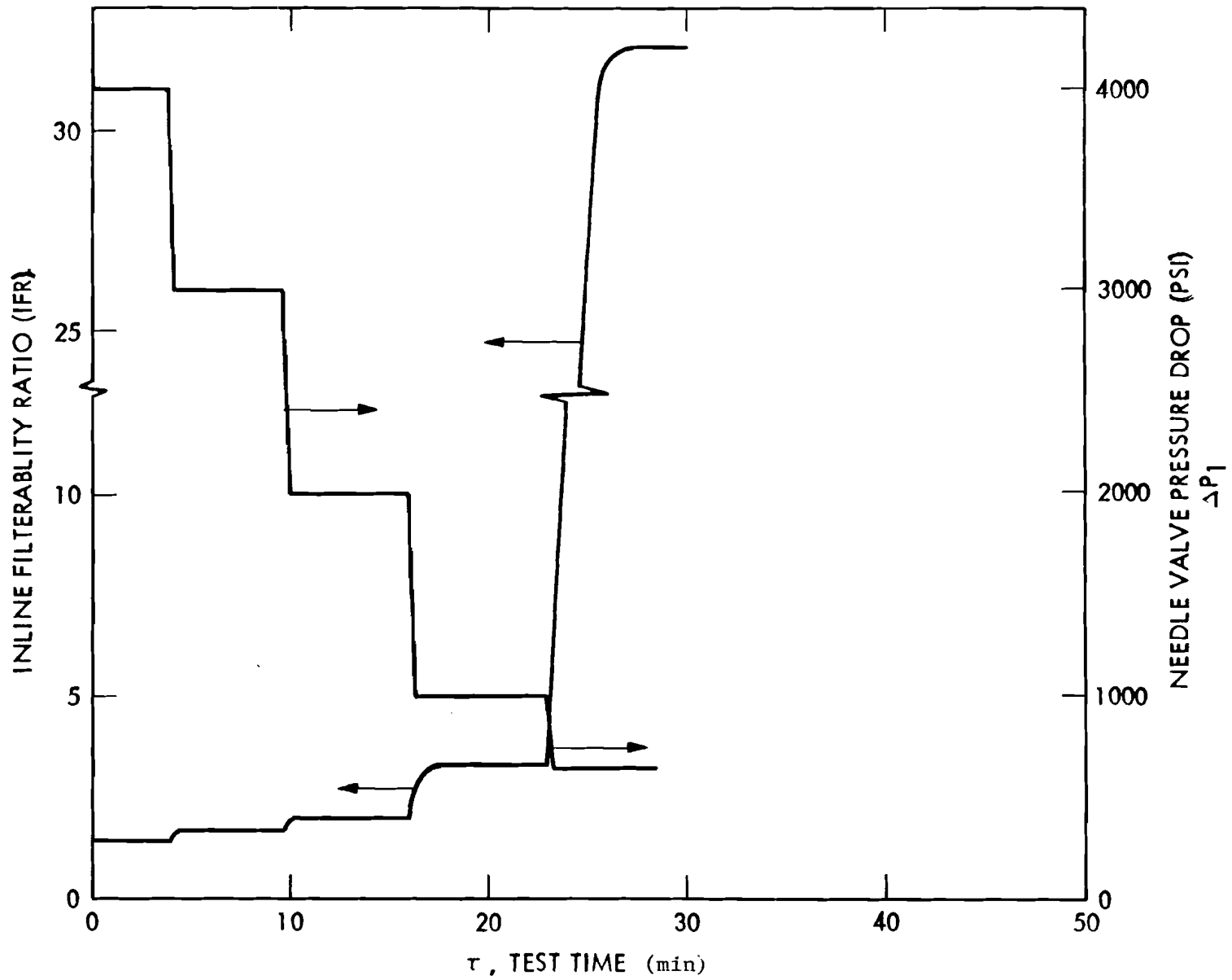


Figure 11 FILTRATION CHARACTERISTICS, TEST NO. 8
(SEE TABLE 5)

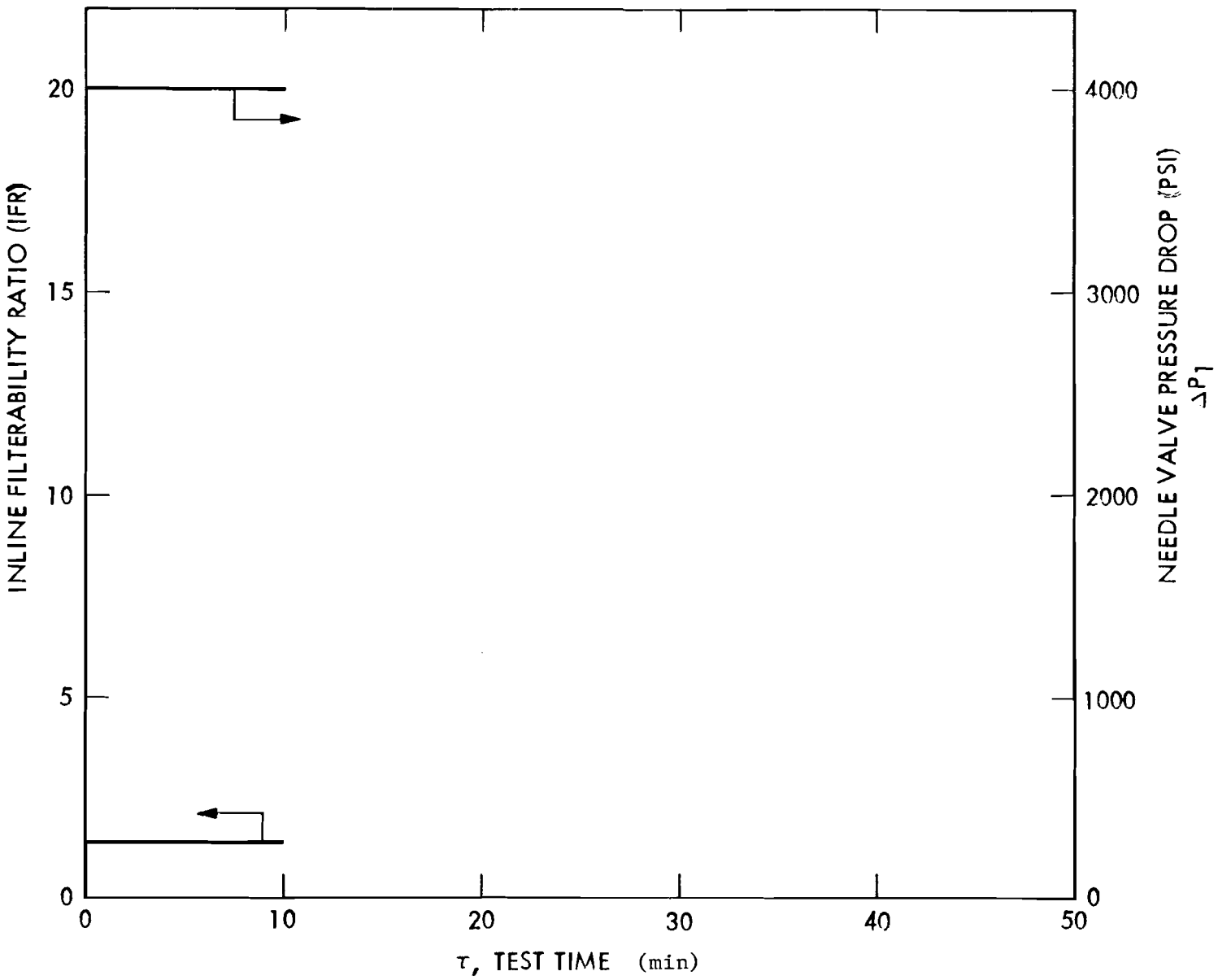


Figure 12 FILTRATION CHARACTERISTICS, TEST NO. 9
(SEE TABLE 5)

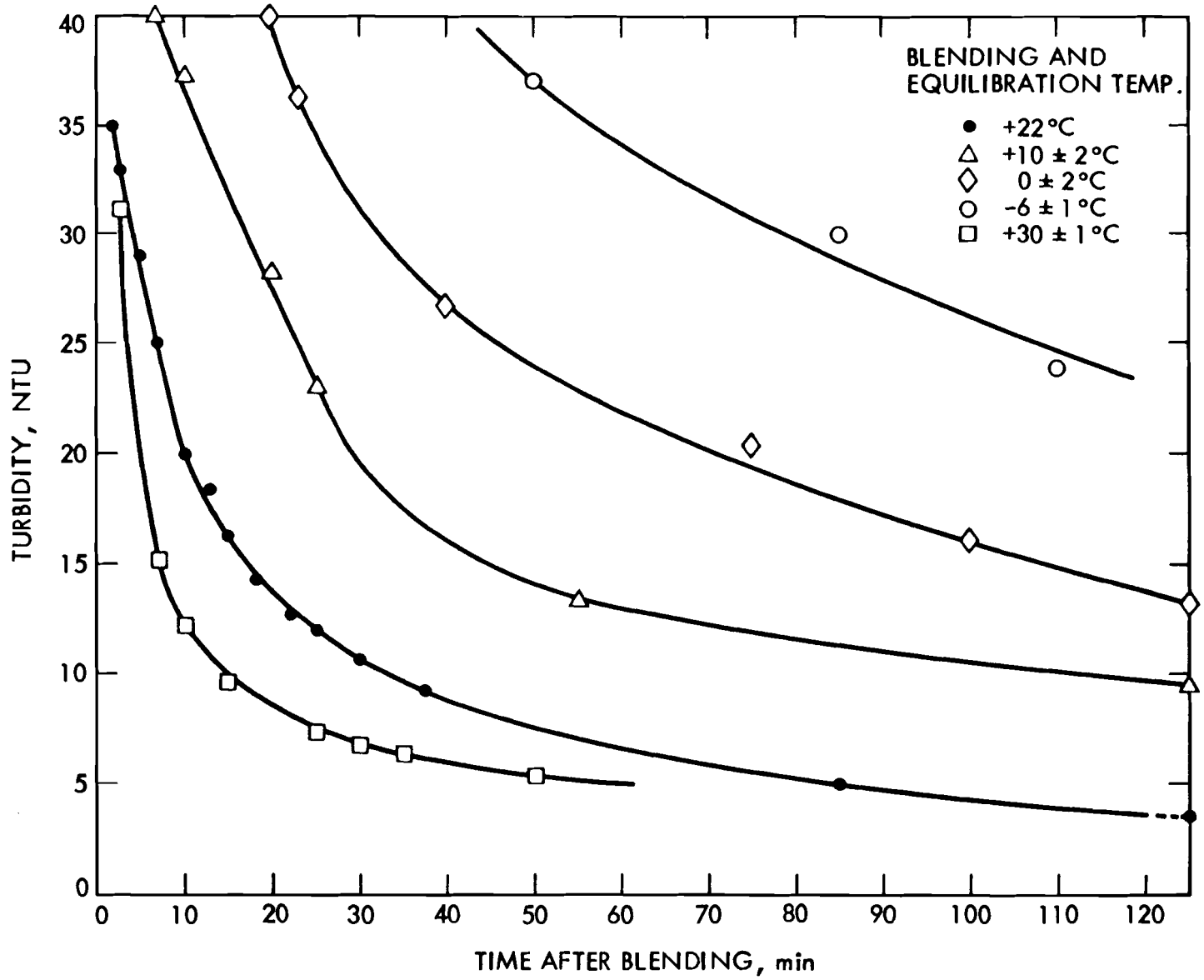


Figure 13 INFLUENCE OF BLENDING TEMPERATURE ON POLYMER DISSOLUTION RATE

The above tests were repeated in the second series of experiments using the modified (low-temperature) inline blender unit (figures 6 and 7). The properties of the Jet A fuel and the polymer slurry used in these tests are presented in table 8. The test results from the turbidity measurements are shown in figure 13, and the results from the fire test at the various blending and equilibrating temperature are listed in table 9.

The results from these experiments confirmed the dependence of the dissolution rate on the AMK blending and equilibration temperatures. Below 0°C the dissolution rate becomes too slow and the antimisting character of the fuel (as determined by the fire test) cannot be achieved in the desired time period of 15-20 minutes after blending, since only a portion of the polymer has been dissolved.

The effect of fuel temperature on the fire protection characteristics of the AMK fuel was repeatedly tested using different slurries as well as different base fuel samples. Table 9 lists only the most representative cases. As previously reported, at AMK fuel temperatures above 30°C, the fire protection capabilities of the fuel begin to deteriorate and at temperatures of about 33°C, the fuels consistently failed to pass the JPL Mini-wing fire test. This AMK behavior was independent of the blending temperature.

TABLE 7

INFLUENCE OF FUEL TEMPERATURE ON AMK BLENDING
AND FIRE PROTECTION CAPABILITIES
(FIRST SERIES OF TESTS)

Blender: 1-liter-per-minute "Kenics" inline blender

Slurry Lot: JCK 14-247-2

Base Fuel: Texaco/Burbank Jet A; 18.9% Aromatics

| Blending Temp °C | Equilibration Temp, °C | Fire Test Results, Air Speed - 130 Knots (67 m/s) |
|---|---|---|
| 22 | 22 | Pass (18) at 22°C<br>Pass (15) at 22°C<br>Fail (3 days) at 35°C |
| +10 | 0 to +10 | Pass (17) at +4°C |
| -5 to 0 | -5 to 0 | Fail (16) at 0°C<br>Pass (30) at 0°C<br>Fail (21) at 0°C |
| 22 | 22 | Pass (6 Hrs) at -25°C |
| -35 | -35 | Fail (45) at -20°C |
| 40 | 43 | Fail (5) at 43°C, 7.8 NTU |
| RMH 1-246 | - | Pass at 22°C<br>Pass at 30°C<br>Fail at 33°C<br>Fail at 40°C<br>Pass at 24°C after 30 min. at 35°C |

Times in minutes after blending are in parentheses.

TABLE 8

POLYMER SLURRY AND BASE FUEL PROPERTIES

**Typical Slurry Analysis***

| Slurry Lot No. | JCK 16-95 | | |
|---|---|---|---|
| Slurry Batch No. | 2 | 3 | 4 |
| Ave. Helipath Slurry Visc. (Cp) (CEL Method No. 9597 #1, Spindle #T-A, 5 RPM) | 11,063 | 6,150 | 7,136 |
| Slurry Solids (%) (Method T5B, 200°C for 2 Hrs.) | 24.9 | 25.1 | 25.0 |
| Slurry Water (%) | 1.19 | 1.20 | 1.15 |

**Typical AMK Analysis**

| Lab AMK Ref. No. | JCK 16-95 | | |
|---|---|---|---|
| Lab AMK Flow Cup (mls/30 sec) | 1.7 | 1.7 | 1.7 |
| Lab AMK Solids (%) | 0.30 | 0.31 | 0.30 |
| Lab AMK Viscosity (Cp) | 3.25 | 3.11 | 3.40 |
| Lab AMK Filter Ratio | 81 | 78 | 80 |
| Lab AMK NTU 15 Min. | 23.7 | 20.9 | 29.8 |
| NTU 30 Min. | 15.4 | 14.7 | 18.9 |
| AMK $H_2O$ (ppm) | 135 | - | 199 |

**Base Fuel Analysis****

| | BURBANK DELIVERY TEXACO JET A, AUGUST |
|---|---|
| Water By Karl Fisher, ppm | 146 |
| Aromatics Vol.,% | 20.4 |
| Olefins, Vol.,% | 1.8 |
| Saturates Vol.,% | 77.8 |
| Naphthalenes Vol.,% | 1.07 |
| Acidity, Mg/KOH/gm. | 0.002 |
| Distillation °F | |
| IBP | 324 |
| 5% | 348 |
| 10% | 358 |
| 20% | 368 |
| 30% | 380 |
| 40% | 394 |
| 50% | 403 |
| 60% | 415 |
| 70% | 427 |
| 80% | 442 |
| 90% | 464 |
| 95% | 481 |
| E.P. | 511 |
| REC.% | 98.5 |
| RES.% | 1.5 |
| LOSS.% | -0- |

* ICI data

** E.W. Saybolt Ind. data - This analysis was not performed on all of the base fuel used

TABLE 9

INFLUENCE OF TEMPERATURE ON AMK BLENDING
AND FIRE PROTECTION CAPABILITIES
(second series of tests)

| Slurry Lot # | AMK Properties | Blending Temp. °C | Equilibration Temp. °C | Fire Test Results Air Speed-130 Knots (67 m/s) |
|---|---|---|---|---|
| JCK 14-247#1 5 GPM RUN | equilibrated FR = 52 CT = 2.2 NTU = 4.3 0.28% solids | 22 | 20 - 25 | pass (21°C) pass-marg (23°C) fail (26°C,30°C,35°C) |
| JCK 16-88-3 "Dryden" slurry 5 GPM RUN | equilibrated FR = 80.5 CT = 2.0 NTU = 3.5 0.31% solids | 22 | 20 - 25 | pass (15°C,25°C) marg (31°C) marg-fail (33°C) fail (34°C,37°C) |
| JCK 14-247#2 1 LPM RUN | equilibrated<br>25 min after blending | 22<br>22 | 20 - 25<br>28 | pass (25°C)<br>fail (28°C) |
| JCK 16-95-2 in "MOJAVE"JET A | equilibrated FR = 80 CT = 1.95 | 20 | 20 - 25 | pass (19°C) marg (29°C) |
| JCK 16-95-2 | - | -15 | -10 to -12 | fail (-10°C) 60 min after blending |
| JCK 16-95-2 | - | 20 | 20 | pass (20°C) 35 min after blending |
| JCK 16-95-2 | - | 0 | 0 | pass (0°C) 60 min after blending |
| JCK 16-95-2 | - | 6 | 6 | pass (7°C) 60 min after blending |
| JCK 16-95-2 | - | -2 | -2 | marg (-2°C) 30 min after blending |
| JCK 16-95-2 | - | 5 | 5 | pass (5°C) 30 min after blending |
| JCK 16-95-2 | - | -18 | -18 | fail (-17°C) 120 min after blending |

Fuel temperatures are in parenthesis.

## CONCLUSIONS

1. Freshly blended AMK fuel at ambient temperature can be degraded using a single pass degradation at 4,000 psi across a needle valve to give acceptable filterability performance.

2. At fuel temperatures below -20°C, degradation becomes increasingly difficult and a single pass degradation at 4,000 psi needle valve pressure drop results in unacceptable filterability performance.

3. Recirculating a fraction of the degraded fuel and heat addition in the bypass loop improves low-temperature degradation performance.

4. The filter ratio measurement gives a misleading assessment of the inline filterability of freshly blended and degraded fuels.

5. Decrease in the base fuel blending temperature causes gradual decrease in the polymer dissolution rate. At temperatures below 0°C, it becomes difficult to produce AMK fuel with acceptable fire protection properties in the required time-frame of 15-20 minutes after blending.

6. Increase in AMK temperature above 30°C results in a partial loss of fire protection properties; above 33°C results in a significant loss of fire protection properties.

7. An acceptable base fuel temperature range for inline blending is 0 to 30°C.

## REFERENCES


1. Jones, P.W., Antimisting Kerosene Investigation Development of a Pump and Degrader, T.R. No. 16/83/1828A. Plessey Aerospace Ltd. (1983)

2. Mannheimer, R.J., Degradation and Characterization of Antimisting Kerosene (AMK), DOT/FAA/CT-82/93

3. Coffinberry, G., Antimisting Fuel Degrader Investigation, DOT/FAA/CT-82/72

4. Fiorentino, A.J. and J.R. Planell, An Assessment of the Use of Antimisting Fuel in Turbofan Engines, NASA CR 168081 (1983)

5. Jones, P.W., Antimisting Kerosene Investigation: Development of a Pump and Degrader, Plessey Aerospace Ltd. Technical Report No. 16/83/1828A, March 1983

6. Coffinberry, G.A., and Tucker, T.M., Antimisting Fuel (AMK) Flight Degrader Development and Aircraft Fuel System Investigation, DOT/FAA/CT-86/6

7. McConnell, P.M. et al., Aircraft Wing Fuel Tank Environmental Simulator Tests for Evaluation of Antimisting Fuels, DOT/FAA/CT-84/15

8. Parikh, P. et al., Antimisting Kerosene: Evaluation of Low Temperature Performance, DOT/FAA/CT-85/31

9. Parikh, P. et al., Antimisting Kerosene: Development of a Continuous 10 GPM Inline Blender, DOT/FAA/CT-85/12

# APPENDIX A

## OPERATING PROCEDURE FOR FILTER RATIO TEST

Fuel temperatures for Jet A and AMK are 20 $\pm$1°C.

Apparatus: Filtration ratio apparatus as shown in the following figure.

Type of filter used: 16 - 18 twilled Dutch weave stainless steel 165 x 1400 mesh cloth, warp diameter 0.07 millimeter (mm) and weft diameter 0.04 mm, precut into discs of 44.5 mm diameter. The material is obtained from Tetco, Inc., 525 Monterey Pass Road, Monterey Park, CA 91754.

1. Make sure filter apparatus has been rinsed clean with Jet A and then drained. Residual AMK can influence the filter time of the next sample.

2. Place an unused filter on lower filter plate, positioning it in the center so that it overlaps the edge of the orifice.

3. Both O-rings should be properly seated. Align upper and lower filter plates the same way each time; attach lower to upper and apply screws, tightening them to the same tolerance each time.

4. Insert a rubber stopper in bottom orifice, choosing a size which does not contact the filter. Hold stopper steady until removal. Excess motion may induce gelation in the filter.

5. Tilt apparatus to diagonal and pour the reference Jet A slowly down side of tube.

6. Once tube is about 3/4 filled, return it to vertical, add fuel till it overflows into gallery.

7. Remove rubber stopper. Record time between time reference points.

8. When apparatus has drained, replace stopper, tilt apparatus to diagonal and pour sample AMK slowly (90 seconds) down side of tube, not letting it hit bottom directly.

9. Repeat step 6.

10. Wait 60 seconds (fuel relaxation time) before removing stopper. Remove it slowly and gently with a turning motion to avoid causing suction.

11. Record time between timing reference points.

12. Dismantle lower filter plate and discard used filter. Rinse and drain apparatus.

FILTER SCREEN DEVICE

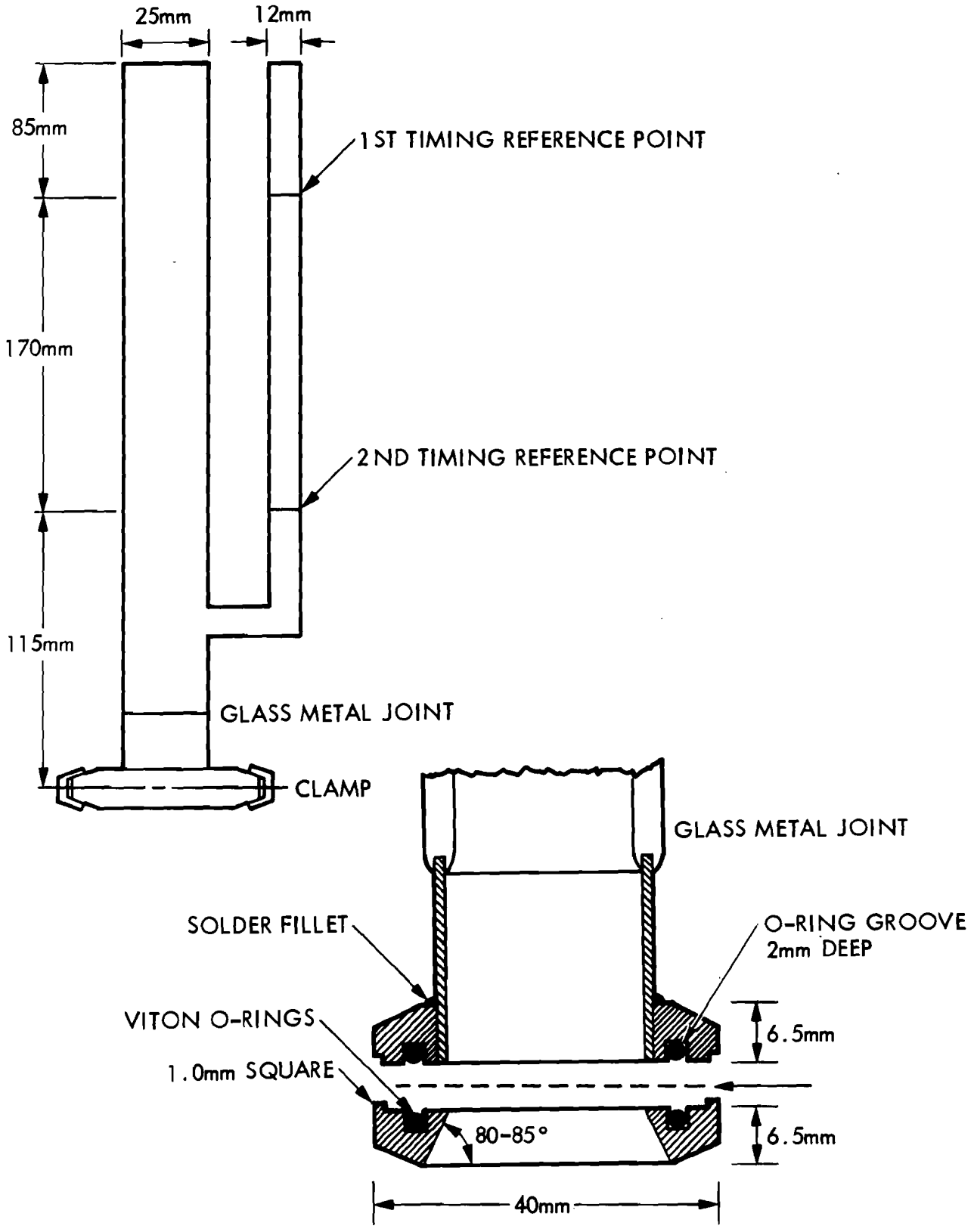

## APPENDIX B

## OPERATING PROCEDURE FOR ICI CUP TEST

### CLEANING PROCEDURE:

1. Place cup in Jet A. fill cup about half way with Jet A.

2. Sonicate for 30 seconds in Jet A fuel; power rating at 7.

3. Blow until dry with 25 psi nitrogen (1/4-inch hose). It is important that the area around the hole both inside and out is completely dry and void of any particles.

### OPERATING PROCEDURE:

1. Suspend cup inside ring on ring stand; allow enough room below cup to permit introduction of graduated cylinder (preferably 10 cc).

2. Place finger over the hole, tilt cup slightly to one side. Pour in fuel sample allowing fuel to run down the sides of the cup rather than hitting the bottom directly.

3. Let fuel overflow into gallery.

4. Once cup is full, allow 30 seconds before releasing finger (fuel relaxation time).

5. Release finger at 30-second mark, recovering fuel in breaker beneath hole. Let the cup drain for another 30 seconds.

6. Again at the 30-second mark, simultaneously slide graduated cylinder in place of beaker; collect for another 30 seconds, then remove graduated cylinder and replace beaker.

7. Discard collected material and repeat cleaning procedure.

APPENDIX C

DISTRIBUTION LIST

Civil Aviation Authority (5)
Aviation House
129 Kingsway
London WC2B 6NN England

DOT-FAA AEU-500 (4)
American Embassy
APO New York, NY 09667

Embassy of Australia (1)
Civil Air Attache
1601 Mass. Ave. NW
Washington, DC 20036

University of California (1)
Service Dept Institute of
Transportation Standard Lib
412 McLaughlin Hall
Berkely, CA 94720

Scientific & Tech. Info FAC (1)
ATTN: NASA Rep.
P.O. Box 8757 BWI Airport
Baltimore, MD 21240

British Embassy (1)
Civil Air Attache ATS
3100 Mass. Ave. NW
Washington, DC 20008

Northwestern University (1)
Trisnet Repository
Transportation Center Library
Evanston, ILL 60201

Director DuCentre Exp DE LA (1)
Navigation Aerineene
941 Orly, France

| | | | | | |
|---|---|---|---|---|---|
| ANE-40 | (2) | ACT-61A | (2) | ASW-53B | (2) |
| ASO-52C4 | (2) | AAL-400 | (2) | AAC-64D | (2) |
| APS-13 Nigro | (2) | M-493.2 Bldg.10A | (5) | ACE-66 | (2) |
| AEA-61 | (3) | | | ADL-1 | (1) |
| ADL-4 North | (1) | APS-1 | (1) | ALG-300 | (1) |
| AES-3 | (1) | APA-300 | (1) | ACT-5 | (1) |
| ANM-60 | (2) | AGL-60 | (2) | AWS-100 | (1) |

FAA, Chief, Civil Aviation
Assistance Group, Madrid Spain
c/o American Embassy
APO-New York 09285-0001

DOT/FAA National Headquarters
ASF-1
800 Independence Avenue, SW.
Washington, DC 20591

DOT/FAA National Headquarters
ASF-100
800 Independence Avenue, SW.
Washington, DC 20591

DOT/FAA National Headquarters
ASF-200
800 Independence Avenue, SW.
Washington, DC 20591

DOT/FAA National Headquarters
ASF-300
800 Independence Avenue, SW.
Washington, DC 20591

DOT/FAA National Headquarters
AST-1
800 Independence Avenue, SW.
Washington, DC 20591

DOT/FAA National Headquarters
ADL-2A
800 Independence Avenue, SW.
Washington, DC 20591

DOT/FAA National Headquarters (4)
AVS-1, 100, 200, 300
800 Independence Aveneu, SW.
Washington, DC 20591

DOT/FAA National Headquarters
AFS-1
800 Independence Avenue, SW.
Washington, DC 20591

DOT/FAA National Headquarters
AFS-200
800 Independence Avenue, SW.
Washington, DC 20591

DOT/FAA National Headquarters
AWS-1
800 Independence Avenue, SW.
Washington, DC 20591

Al Astorga
Federal Aviation Administration
(CAAG)
American Embassy, Box 38
APO-New York 09285-0001

Dick Tobiason
ATA of America
1709 New York Avenue, NW.
Washington, DC 20006

FAA Anchorage ACO
701 C Street, Box 14
Anchorage, Alaska 99513

FAA Atlanta ACO
1075 Inner Loop Road
College park, Georgia 30337

FAA Boston ACO
12 New England Executive Park
Burlington, Mass. 01803

FAA Brussels ACO
% American Embassy, APO,
New York, NY 09667

FAA Chicago ACO
2300 E. Devon, Room 232
Des Plains, Illinois 6008

FAA Denver
10455 East 25th Ave., Suite 307
Aurora, Colorado 98168

Frank Taylor
3542 Church Road
Ellicott City, MD 21403

Mr. Gale Braden (FAA)
5928 Queenston St.
Springfield, VA 22152

Richard E. Livingston, Jr.
Director, Aerotech Operations for
the IAPA Group
1805 Crystal Drive, Suite 1112 South
Arlington, VA 22202

Burton Chesterfield, DMA-603
DOT Transportation Safety Inst.
6500 South McArthur Blvd.
Oklahoma City, OK 73125

FAA Forth Worth ACO
P.O. Box 1689
Fort Worth, TX 76101

FAA Long Beach ACO
4344 Donald Douglas Drive
Long Beach, CA 90808

FAA Los Angeles ACO
P.O. Box 92007, Worldway Postal Center
Hawthorne, CA 90009

FAA New York ACO
181 So. Frankline Ave., Room 202
Valley Stream, NY 11581

FAA Seattle ACO
17900 Pacific Highway South, C#68966
Seattle, Washington, 98168

FAA Wichita ACO
Mid Continent Airport, Room 100 FAA
1891 Airport Road
Wichita, KA 67209

Dr. Hans A. Krakauer
Deputy Chairman, International Airline
Pilots Association Group
Apartado 97
8200 Albufeira, Portugal

Geoffrey Lipman, Executive Director
President du Conseil
In'l Found. of Airline Assoc.
Case Postale 462, 1215 Geneva
15 Aeroport, Suisse, Geneva

A. Allcock
Department of Industry
Abell House, Room 643
John Islip Street, London
SW14 LN ENGLAND

Allied Pilot Association
Equipment Evaluation Comm.
P.O. Box 5524
Arlington, TX 76011

R. Altman
NASA ARC
M.S. 234-1
Moffett Field, CA 94035

Robert Anderson, P.E.
Manager of Engineering
Facet/Quantek, Inc.
P.O. Box 50096
Tulsa, OK 74150

S. Armour
Defense Research Establishment
Suffield
Ralston, Alberta
CANADA, TOJ 2NO

Robert Armstrong
B-8414 MS-9W61
Boeing Airplane Company
P.O. Box 3707
Seattle, WA 98124

Steven Baxter
Conoco, Inc.
Chemicals Research Division
P.O. Box 1267
Ponca City, OK 74601

D. Boswell
Quaker Chemical Corporation
Elm Street
Conshohocken, PA 19428

Lou Brown, AWS-120
FAA National Headquarters
800 Independence Avenue, SW.
Washington, DC 20591

Don Buse
11B12AB
Phillips Petroleum Company
Bartlesville, OK 74004

William Callanan
ARCO Chemicals Company
1500 Market Street
Philadelphia, PA 19101

Ronald Camp
BASF Wyandotte Corporation
1609 Biddle Avenue
Wyandotte, MI 48192

Paul Campbell
244 Green Meadow Way
Palo Alto, CA 94306

Clifford Cannon
Transamerica Delaval, Inc.
Wiggins Connectors Division
5000 Triggs Street
Los Angeles, CA 90022

George Cantley
Lear Siegler, Inc.
241 South Abbe Road
P.O. Box 4014
Elyria, OH 44036

Ralph Cantrell
University of Bridgeport
U.S. Army ROTC Department
Bridgeport, CT 06601

Homer Carhart
Naval Research Lab
Code 6180
Washington, DC 20375

Michael Cass
Sundestrand Corporation
4747 Harrison Avenue
Rockford, IL 61101

Young Cho, Ph.D.
Drexel University
College of Engineering
Philadelphia, PA 19104

Arthur Churchill
AFWAL/POSH
Wright Patterson Air Force Base
Ohio 45433

George Coffinberry
General Electric Company
1 Neumann Way
Mail Drop E-186
Cincinnati, OH 45215

Fred Cole
Filter Products Division
Facet Enterprises, Inc.
8439 Triad Drive
Greensboro, NC 27409

J. Collier
Air Transport Association
of America
1709 New York Avenue, NW.
Washington, DC 20006

Ralph Combariati
Port Authority of NY and NJ
JFK International Airport
Jamaica, NY 11430

Edward Conklin
Sikorsky Aircraft
North Main Street
Straftord, CT 06602

B. Corman
Exxon Research and Engineering
P.O. Box 4255
Baytown, TX 77520

Dick Coykendall
United Airlines
San Francisco International
Airport
San Francisco, CA 94128

Gerald Cundiff
General Electric Company
3 Penn Center Plaza
Philadelphia, PA 19102

Rick DeMeis
126 Powers Street
Needham, MA 02192

Terence Dixon
Boeing Aerospace Corporation
P.O. Box 3999
M/S 8J-93
Seattle, WA 98124

Thomas Donohue
General Electric Company
1 Neumann Way, Mail Drop H-44
P.O. Box 156301
Cincinnati, OH 45215-6301

William Dukek
11 Ridge Road
Summit, NJ 07901

David Eggerding
AMOCO Chemicals Corporation
Research and Development
P.O. Box 400
Naperville, IL 60540

Thor Eklund, ACT-350
FAA Technical Center
Atlantic City Airport, NJ 08405

John Enders
Flight Safety Foundation
5510 Columbia Pike
Arlington, VA 22204

John Eschbaugh
Air Maze Incom International
25000 Miles Road
Cleveland, OH 44198

Anthony Fiorentino
Pratt and Whitney Aircraft
EB2G4
400 Main Street
East Hartford, CT 06108

F. Firth
Lucas Aerospace
Vannonstrand Avenue
Englewood, NJ 07632

David Fishman
Technical Planning and Development
United Technologies Inmont
1255 Broad Street
Clifton, NJ 07015

Kendall Foley
Hercules Inc.
Research Center
Wilmington, DE 19899

Robert Friedman
NASA Lewis Research Center
M/S 6-9
21000 Brookpark Road
Cleveland, OH 44135

Allen Fuhs
Department of Aeronautics
Naval Post Graduate School
Monterey, CA 93940

Gerald Fuller
Chemical Engineering
Stanford University
Stanford, CA 94305

Y. Funatsu
All Nippon Airways
1-6-6, Tokyo International Airport
Ohta-KU, Tokyo 144
JAPAN

Richard G. Thrush
Lear Siegler, Inc.
241 South Abbe Road
P.O. Box 4014
Elyria, OH 44036

Henry Gill
Lockheed California Company
Building 88, B-6
P.O. Box 551
Burbank, CA 91520

David Goldsmith
Eastern Airlines
Miami International Airport
Miami, FL 33148

Stanley Gray
Mechanical Technology Inc.
968 Albany Shaker Road
Latham, NY 12110

Ray Grill
TRW
1766 Sunset Drive
Richmond Heights, OH 44124

G. Haigh
Air Canada
Air Canada Base, Montreal
International Airport
Quebec, CANADA H4Y 1 C2

Lit Han
Ohio State University
206 W. 18th Avenue
Columbus, OH 43210

M. Hardy
United Airlines
SFOEG, MOC
San Francisco International Airport
California 94128

Cyrus Henry
E. I. Dupont De Nemours
and Company
Petroleum Lab
Wilmington, DE 19898

R. Hileman
Texaco, Inc.
Box 509
Beacon, NY 12508

W. Hock
Grumman Aerospace Corporation
B 14 035
111 Stewart Avenue
Bethpage, NY 11714

Arthur Hoffman
American Cynamid
1937 West Main Street
Stamford, CT 06904

William Holland
Department of the Navy
NAVAIR 518
Naval Air Systems Command
Washington, DC 20361

Robert Hoover
Box 10850 Cave Creek Stage
Phoenix, AZ 85020

Thomas Horeff, AWS-120
DOT/FAA National Headquarters
800 Independence Avenue, SW
Washington, DC 20591

Gary Horton
Chemical Research Division
Conoco, Inc.
P.O. Box 1267
Ponca City, OK 74603

Major Hudson
Air Force Inspection and Safety
SEDM
Norton Air Force Base, CA 92499

Stephen Imbrogno
106 East Miami Avenue
Cherry Hill, NJ 08034

Wolfgang Immel
BASF Aktiengesellschaft
Technologie und Produktionsplanung
6700 Ludwigshafen
WEST GERMANY

M. Ingham
Chevron Research Company
P.O. Box 1627
Richmond, CA 94802-0627

G. Jahrstorfer
Chandler Evans, Inc.
Charter Oak Boulevard
West Hartford, CT 06110-0651

J. Jamieson
National Gas Turbine Establishment
Pyestock, Farnborough
Hants GU14 OLS
ENGLAND

R. Kassinger
Exxon International Company
Commercial Department
200 Park Avenue
Florham, NJ 07932

C. Kauffman
The University of Michigan
Gas Dynamics Laboratories
Aerospace Engineering Building
Ann Arbor, MI 48109

Perry Kirklin
Mobil Research and Development
Corporation
Billingsport Road
Paulsboro, NJ 08066

R. Kirsch, AWS-120
FAA National Headquarters
800 Independence Avenue, SW.
Washington, DC 20591

John Kirzovensky
Naval Air Propulsion Center
Code PE71
1440 Parkway Avenue
Trenton, NJ 08628

J. Knepper
Petrolite Corporation
369 Marshall Avenue
St. Louis, MO 63119

W. Kochis
FAA Safety Programs
Division, ASF-300
800 Independence Avenue, SW.
Washington, DC 20591

Rob Koller
Rohm and Haas
727 Norristown Road
Spring House, PA 19477

Robert Kostelnik
ARCO Chemical Company
3801 West Chester Pike
Newtown Square, PA 19073

John Krynitsky
Fuels and Petroleum Products
4904 Cumberland Avenue
Chevy Chase, MD 20015

Karl Laden
Carter-Wallace, Inc.
Half Acre Road
Cranbury, NJ 08512

Thomas Lally, Jr.
Senior Marketing Specialist
Aircraft Porous Media, Inc.
Pinellas Park, FL 33565

R. Landel
Jet Propulsion Lab
4800 Oak Grove Drive
Pasadena, CA 91103

R. Laurens
Rolls-Royce, Inc.
1895 Phoenix Boulevard
Atlanta, GA 30349

Richard Linn
American Airlines
MD 4H14
P.O. Box 61616
Dallas/Fort Worth Airport, TX 75261

P. Longjohn
Clagon Corporation
P.O. Box 1346
Pittsburgh, PA 15230

Richard Lyman
Lear Siegler, Inc.
Energy Products Division
2040 East Dyer Road
Santa Ana, CA 92702

Richard Mannheimer
Southwest Research Institute
8500 Culebra Road
San Antonio, TX 78284

A. Mattox, Jr.
Allied Pilots Association
12723 Brewster Circle
Woodbridge, VA 22191

James McAbee
ICI Americas, Inc.
Specialty Chemicals Division
Wilmington, DE 19897

Charles McGuire
Department of Transportation
400 7th Street, SW. (P-5)
Washington, DC 20590

Peter Meiklem
British Embassy
3100 Massachusetts Avenue, NW
Washington, DC 20008

Chris Meldrum
Texaco Company
P.O. Box 430
Bellaire, TX 77401

Robert Miller
c/o Dr. S. P. Wilford
Royal Aircraft Establishment
Farnborough, Hants
GU146TD, ENGLAND

Robert Moore
Shell Chemical Company
Box 2463
Houston, TX 77001

Peter Moss
American Hoechst Corporation
Route 206 North
Somerville, NJ 08876

David Nesterok, ACT-53
FAA Technical Center
Atlantic City Airport, NJ 08405

Warren Niederhauser
Rohm and Haas Company
727 Norristown Road
Spring House, PA 19477

J. O'Donnell
Airline Pilots Association
1625 Massachusetts Avenue, NW.
Washington, DC 20036

James O'Mara
Rohm and Haas
727 Norristown Road
Spring House, PA 19477

Dean Oliva
Lockheed
Department 7475/Building 229A
P.O. Box 551, Plant 2
Burbank, CA 91520

Robert Oliver
Institute for Defense Analyses
1801 North Bauregard Street
Alexandria, VA 22311

George Opdyke
AVCO Lycoming Division
550 South Main Street
Stratford, CT 06497

Robert Page
Texas A&M University
College of Engineering
College Station, TX 77884

Chris Papastrat
Emcee Electronics
730 South Grove Street
Venice, FL 33595-2438

Roy Pardue
Lockheed/Georgia Company
86 South Cubb Drive
Marietta, GA 30063

Sam Paton
El Paso Products
P.O. Box 3986
Odessa, TX 79760

Tom Peacock
Douglas Aircraft Company
3855 Lakewood Boulevard
Longbeach, CA 90846

R. Pharby
Petro Canada
Sheridan Park
Mississauga, Ontario
CANADA, L5K1A8

Andy Powell
Saudia - CC 836
P.O. Box #167
Jeddah
SAUDI ARABIA

John Pullekins
Air Products and Chemicals
Industrial Chemical Division
P.O. Box 538
Allentown, PA 18105

Horst Rademacher
57 Overhill Road
Orinda, CA 94563-3122

William Radenbaugh
General Electric Company
Manager, Operational Planning
1000 Western Avenue
Lynn, MA 01910

C. Randall, P.E.
Lockheed Georgia Company
D72-47 Zone 418
Marietta, GA 30063

Richard Reiter
National Starch and Chemical
Box 6500
10 Finderne Avenue
Bridgewater, NJ 08807

M. Rippen
Pratt and Whitney Aircraft
Government Products Division
P.O. Box 2691
West Palm Beach, FL 33402

Charles Rivers
ICI Americas, Inc.
Wilmington, DE 19897

Russell Rogers
Aeroquip Corporation
Corporate Engineering
Jackson, MI 49203

J. Romans
Hughes Association, Inc.
9111 Louis Avenue
Silver Spring, MD 20910

E. Roockey
Northrop Corporation
Aircraft Division
One Northrop Avenue
Hawthorne, CA 90250

V. Sarohia (15)
Jet Propulsion Lab
M/S 125-214
4800 Oak Grove Drive
Pasadena, CA 91109

George Savins
JGS & Associates
P.O. Box 763158
Dallas, TX 75376-3158

Barry Scallet
Annheuser-Busch Corporation
Central Research Inc.
P.O. Box 11841
Clayton, MO 63105

Barry Scott, ADL-31
P.O. Box 25
NASA Ames Research Center
Moffett Field, CA 94035

Valentinas Sernas
Rutgers University
College of Engineering
P.O. Box 909
Piscataway, NJ 08854

Hakam Singh, Ph.D.
Product Chemical and Research
Corporation
2920 Empire Avenue
Burbank, CA 91504

Dana Smith
ARCO Chemical Company
1500 Market Street
32nd Floor
Philadelphia, PA 19101

Daniel Smith
Manager, Research and Development
Engineered Fabrics Division
Goodyear Aerospace Corporation
Akron, OH 44315

S. Sokolsky
Aerospace Corporation
P.O. Box 91957
Los Angeles, CA 90009

Leo Stamler
Gull Airborne Instruments, Inc.
395 Oser Avenue
Smithtowne, NY

Barry Stewart
Olin Chemicals
Brandenburg, KY 40108

Warren Strahle
Georgia Institute of Technology
School of Aerospace Engineering
Atlanta, GA 30332

Kurt Strauss
Consultant, Aviation Fuels
116 Hooker Avenue
Poughkeepsie, NY 12601

Dick Stutz
Sikorsky Aircraft
Engineering Department
Stratford, CT 06602

A. Taylor
Cranfield Institute of Technology
Cranfield, Bedford, MK 43 OAL
ENGLAND

W. Taylor
Exxon Research and Engineering Company
Products Research Division
P.O. Box 51
Linden, NJ 07036

James Teng, Ph.D.
Annheuser-Busch Corporation
1101 Wyoming Street
St. Louis, MO 63118

Joseph Thibodeau
Goodyear Aerospace Corporation
1210 Massillon Road
Akron, OH 44315

Dick Tobiason
Air Transport Association
1709 New York Avenue, NW.
Washington, DC 20006

F. Tolle
Boeing Military Airplane Company
P.O. Box 3707
M/S 4152
Seattle, WA 98124

Trans World Airlines, Inc.
Kansas City International Airport
2-280
P.O. Box 20126
Kansas City, MO 64195

Hugh Trask
Southland Corporation
849 Coast Boulevard
LaJolla, CA 93034

M. Trimble
Delta Airlines
DEAT 568
Atlanta International Airport
Atlanta, GA 30320

Ted Tsue
Boeing Aerospace Company
P.O. Box 3999
M/S 45-07
Seattle, WA 98124

Robert Umschied
M.S.E.-6
9709 East Central
Wichita, KS 19328

U.S. Army Belvoir RDE Center
Commander
ATTN: STRBE-VF (Schaekel)
Fort Belvoir, VA 22060-5606

Ed Versaw
Lockheed/California Company
P.O. Box 551
Burbank, CA 91520

J. Vitkuske
Dow Chemical Company
1702 Building
Midland, MI 48640

Fred Waite
Imperial Chemical Industries PLC
Paints Division
Wexham Road, Slough SL2 5DS
ENGLAND

G. Walter
Sherwin-Williams Company
501 Murray Road
Cincinnati, OH 45217

Paul Weitz
Simmonds Precision Instruments
Panton Road
Vergennes, VT 05491

John White
National Transportation
Safety Board
800 Independence Avenue, SW.
Washington, DC 20594

Richard White
Denry White, Inc.
P.O. Box 30088
Cleveland, OH 44130

S. Wilford
Royal Aircraft Establishment
Farnborough, Hants
GU146TD
ENGLAND

R. Williams
Phillips Petroleum
107 Catalyst Lab
Bartlesville, OK 74004

Jacques Zakin
Ohio State University
Department of Chemical Engineering
140 West 19th Avenue
Columbus, OH 43210

R. Zalesky
Lockheed California Company
P.O. Box 551
Burbank, CA 91520



* U.S. GOVERNMENT PRINTING OFFICE ; 1988 - 508-531