DOT/FAA/CT-87/18

FAA TECHNICAL CENTER
Atlantic City Airport
N.J. 08405

Fuel Containment Concepts – Transport Category Airplanes

FAA WJH Technical Center
00025812

[redacted]

MAR 23 Rec'd

[redacted]

COPY 3

Gil Wittlin

Prepared by
Lockheed-California Company
Burbank, California

November, 1987

This document is available to the U.S. public through the National Technical Information Service, Springfield, Virginia 22161

US Department of Transportation
Federal Aviation Administration

NOTICE

This document is disseminated under the sponsorship of the Department of Transportation in the interest of information exchange. The United States Government assumes no liability for the contents or use thereof.

The United States Government does not endorse products or manufacturers. Trade or manufacturer's names appear herein solely because they are considered essential to the object of this report.

1. Report No.	2. Government Accession No.	3. Recipient's Catalog No.
DOT/FAA/CT-87/18		

4. Title and Subtitle	5. Report Date
FUEL CONTAINMENT CONCEPTS - TRANSPORT CATEGORY AIRPLANES	November 1987
	6. Performing Organization Code
7. Author(s)	8. Performing Organization Report No.
G. Wittlin	LR 31216
	10. Work Unit No.
9. Performing Organization Name and Address	
Lockheed-California Company Burbank, CA. 91520	11. Contract or Grant No. DTFA03-86-C-00005
	13. Type of Report and Period Covered FINAL Jan. 1986 - Mar. 1987
12. Sponsoring Agency Name and Address U. S. Department of Transportation Federal Aviation Administration, Technical Center Atlantic City International Airport, N.J. 08405	14. Sponsoring Agency Code

15. Supplementary Notes

16. Abstract

This report describes a four phase study to identify potential fuel containment concepts for transport category aircraft. The study includes a review and evaluation of:

Accident crash test and analyses data
Design; guidelines, specification and criteria
Design procedures
State-of-the-art technology
Design studies and conclusions

A literature survey was performed and the relative contributions from 53 documents are noted. Transport airplane data are summarized including the results from full-scale airplane crash tests and section tests. Analyses results which depict dynamic pulses are presented. Several reports including the U.S. Army Crash Survival Design Guide and the Special Aviation Fire and Explosion Reduction (SAFER) Advisory Committee are discussed in detail. Several fuel containment structural design concepts are evaluated with regard to both wing and fuselage usage. The state-of-the-art technology is summarized in this report. Included in this summary is a priority ranking of approaches. A selection of approaches is described. The selected concepts are reviewed with regard to benefit and penalties. The concepts are prioritized in order of effectiveness.

17. Key Words (Suggested by Author(s))	18. Distribution Statement
fuel containment, crash resistant fuel system (CRFS), auxiliary tank, wet cell, accident data, tests, design studies, criteria, FAR, BCAR, post-crash fire, Benefits, Penalties, weight, cost.	This document is available to the U.S. public through the National Technical Information Services, Springfield, Virginia 22161

19. Security Classif. (of this report)	20. Security Classif. (of this page)	21. No. of Pages	22. Price*
UNCLASSIFIED	UNCLASSIFIED	202	

* For sale by the National Technical Information Service, Springfield, Virginia 22161

FOREWORD

This report was prepared by the Lockheed-California Company under Contract DTFA03-86-C-00005. This report contains a description of the effort performed under Task Area I, Task Order No. 1 and covers the period from January 1986 to April 1987. The work was administered under the direction of R. Johnson, Transport Program Manager, the Federal Aviation Administration.

The program leader and principal investigator was Gil Wittlin of the Lockheed-California Company Flutter and Dynamics Department. Ed Versaw of the Lockheed Propulsion Division, and William Grove and John Schaplowsky of the Lockheed Commercial Aircraft Design Division provided support.

TABLE OF CONTENTS

Section		Page
	EXECUTIVE SUMMARY	xii
1.0	INTRODUCTION	1-1
2.0	LITERATURE SURVEY	2-1
3.0	TRANSPORT AIRPLANE DATA	3-1
3.1	ACCIDENT DATA	3-1
3.2	SUMMARY OF TEST DATA	3-9
3.2.1	Full-Scale Crash Tests	3-10
3.2.2	Airplane Section Tests	3-17
3.2.3	Concentrated and Distributed Load Tests	3-22
3.3	ANALYSES RESULTS	3-28
4.0	DESIGN STUDIES, RECOMMENDATIONS AND CRITERIA	4-1
4.1	DESIGN STUDIES	4-1
4.1.1	FAA-ADS-19	4-1
4.1.2	FAA-ADS-27	4-5
4.1.3	FAA-ASF-80-4	4-8
4.2	DESIGN CRITERIA AND RECOMMENDATIONS	4-9
4.2.1	The U.S. Army Crash Survival Design Guide	4-9
4.2.2	Military Specifications	4-12
4.2.3	Coverage by Existing Regulations and Advisory Circulars	4-20
5.0	EVALUATION OF FUEL CONTAINMENT STRUCTURAL DESIGN CONCEPTS	5-1
5.1	WING FUEL TANKS	5-1
5.2	FUSELAGE FUEL TANKS	5-10
6.0	STATE-OF-THE-ART TECHNOLOGY	6-1
6.1	SUMMARY OF TRANSPORT AIRPLANE DATA	6-1
6.2	POST-CRASH FIRE REDUCTION ASSESSMENT	6-1
6.3	COMPARISON OF DESIGN REQUIREMENTS AND CURRENT PROCEDURES	6-13
6.4	DISCUSSION WITH ROTARY-WING AIRCRAFT MANUFACTURERS	6-22
6.5	GENERAL AVIATION SAFETY PANEL (GASP II) RECOMMENDATIONS	6-27

TABLE OF CONTENTS (Continued)

Section		Page
6.6	PRELIMINARY PRIORITY RANKING	6-31
6.7	GENERAL APPROACHES	6-38
7.0	BENEFIT AND PENALTY ANALYSES	7-1
7.1	BENEFIT ANALYSIS	7-1
7.1.1	Wing Fuel Containment	7-1
7.1.2	Fuselage Fuel Containment	7-13
7.1.3	Summary of Potential Fatality Reduction	7-15
7.2	PENALTY ANALYSIS	7-22
7.2.1	Weight Penalties	7-31
7.2.2	Cost Penalties	7-37
7.3	WEIGHT PENALTY VERSUS POTENTIAL FATALITY REDUCTION	7-38
8.0	CONCLUSIONS	8-1
	REFERENCES	R-1
	APPENDICES	
A	Literature Survey Reports	A-1
B	SAFER Sucommittee Report Summaries	B-1
C	Summary of Coverage by Existing Regulations and Advisory Circulars	C-1

LIST OF FIGURES

Figure		Page
1-1	Engineering Studies	1-4
1-2	Flow Diagram - Development of Prioritized CRFS Technology for Transport Category Airplanes	1-4
1-3	Report Organization	1-4
2-1	Literature Survey Matrix	2-3
3-1	Selected Accident Study Database (Ref. 4)	3-2
3-2	Accidents as a Function of Operational Regime (Ref. 1)	3-2
3-3	Fatalities as a Function of Sink Rate	3-4
3-4	Injuries as a Function of Sink Rate	3-5
3-5	Accident Events which Lead to a Fire Hazard (Ref. 3)	3-6
3-6	DC-7 Fuel Tank Layout and Instrumentation Locations	3-12
3-7	L1649 Fuel Tank Layout and Instrumentation Locations	3-12
3-8	Layout of Obstacles for L1649 and DC-7 Full-Scale Crash Tests	3-13
3-9	CID Impact Sequence	3-19
3-10	Floor Acceleration Peaks Distribution	3-19
3-11	Lower Fuselage Underside Crush	3-20
3-12	Results of Narrow-body Airplane Fuselage Section (Without Cargo) Test (Reference 17)	3-20
3-13	Results of Narrow-Body Airplane Forward Fuselage Section (With Cargo) Test (Reference 16)	3-21
3-14	Results of Narrow-Body Airplane Fuselage Center Section Test (Ref. 19)	3-23
3-15	Results of Wide-Body Airplane Aft Fuselage Section Test (Ref. 19)	3-23
3-16	Narrow-Body Frame Section Displacement and Force Test Results (Reference 16)	3-27
3-17	Comparison of Post-Test CID Krash Analyses and Test Results for Fuselage Impact	3-29
3-18	KRASH Versus CID Test Results, Fuselage Bending Moments	3-29
3-19	Comparison of KRASH Analysis and CID Airplane Test Wing Bending	3-30

LIST OF FIGURES (Continued)

Figure		Page
3-21	Velocity Envelope for Structural Integrity	3-31
4-1	Examples of Local Concentrated Loads Required to Fail Wings in Chordwise Shear or Bending	4-6
4-2	Peak Loads Required to Cut Through Trees or Poles 10 Ft. Above Ground Level	4-6
4-3	Design Velocity Changes, Off-Axis Requirements	4-11
5-1	Conventional Fuel Tank and Rib Design Features	5-2
5-2	Front Spar Design Configurations	5-3
5-3	Forward Skin Panel Designs - Impact Resistance	5-4
5-4	Front Spar Protection Concepts	5-5
5-5	Leading Edge Protection Concepts - Pole Tree Impact	5-6
5-6	Energy Absorbing Structures Concepts	5-7
5-7	Bladder Cell Installation Wide-body Transport Airplane	5-13
5-8	Location of Fuselage Fuel Tanks in Wide-body Transport Category Airplane, Tanker Configuration	5-14
5-9	General Arrangement of Fuselage Fuel Tank Specimen	5-15
5-10	Wide-Body Aircraft Fuselage Fuel Tank Load-Paths	5-16
5-11	Fuel Tank General Arrangement, Narrow-body Transport Airplane	5-17
5-12	Fuel Tank Shell Construction	5-18
5-13	Tank Attachment Layout	5-18
5-14	Cradle-mounted Supplemental Tanks Suspended from Passenger Floor	5-20
6-1	Accident Events which Lead to a Fire Hazard	6-4
6-2	Main Landing Gear Components	6-9
6-3	Engine Wing/Pylon Design	6-10
6-4	Example Breakaway Valve Weights and Separation Tension Loads and Bending Moments were Obtained from Test Data	6-34
6-5	Use of Flexible Hose in Current Widebody Transport Airplane	6-41
6-6	Potential Application of Breakaway Fitting in a Current Widebody Transport Airplane	6-42
6-7	Typical Location of Tank Isolation Shut-Off Valves in a Current Widebody Transport Airplane	6-43

LIST OF FIGURES (Continued)

Figure		Page
6-8	Spanwise Wing Fuel Tank Compartmentation	6-45
7-1	Types of Tank Rupture	7-8
7-2	Engine/Pylon Separation/Collapse and Fuel Tank Rupture, Wing Pod Engined Aircraft	7-8
7-3	Engine/Pylon Separation/Collapse and Fuel Tank Rupture, Aft Body Engined Aircraft	7-9
7-4	Estimates of Wing Fuel Containment Related Fire Fatalities Per Year	7-16
7-5	Estimates of Fuselage Containment Related Fire Fatalities Per Year	7-17
7-6	Trend of Fatal Accident Rates	7-20
7-7	Accident Rates for All Types of Accidents	7-20
7-8	Scheduled Passenger Enplanements - Fiscal Years	7-21
7-9	Percent by Aircraft Type	7-21
7-10	Photographs of the L1649 Crash Scene Illustrating Wing Failures and Spillage Pattern	7-25
7-11	Wing Inboard Section with Wet Fuel Cells for Current Wide-Body Airplane	7-26
7-12	Modification of Existing Wing Inboard Section for CRFS	7-27
7-13	Redesign of Wing Inboard Section for CRFS	7-28
7-14	Center Section Tanks for Current Wide-body Airplane	7-32
7-15	Typical Fuselage Auxiliary Tank Arrangement	7-32
7-16	Summary of Weight/Volume Penalty - CRFS	7-34
4-3	Elimination of Fires Inside Fuel Tanks	B-4
4-4	Tank Explosion Accident Assessment (Post Crash Fires)	B-4
4-5	Tank Explosion Accident Rate World Wide Air Carriers - All Operators	B-5
4-6	Fuel Tank Load Factors	B-7
4-7	Cargo Compartment Tank Installation	B-8
4-8	Crash-Resistant Fuel Tanks Summary, Evaluation of Concepts	B-10

LIST OF TABLES

Tables		Page
3-1	Left Wing Damage Experienced During L1649 and DC-7 Full-Scale Crash Tests	3-14
3-2	Right Wing Damage Experienced During L1649 and DC-7 Full-Scale Crash Tests	3-15
3-3	Comparison of CID Test Planned and Actual Impact Conditions	3-18
3-4	FAA/NASA Airframe Section Impact Tests	3-21
3-5	Summary of Concentrated and Distributed Load Tests	3-24
4-1	Wing Loading, Failure Modes and Design Principles	4-2
4-2	Summary of Design Conditions for Rotary-Wing and Light Fixed-Wing Aircraft	4-12
4-3	Crash Survival Design Guide Recommended Fuel Containment Design Features	4-13
4-4	Fuel Tanks Crash Loads Requirements	4-20
5-1	Design Trade-offs	5-11
6-1	Summary of Transport Airplane Data - Crash Scenarios	6-2
6-2	Summary of Transport Airplane Data - Fuel Containment	6-3
6-3	The Relationship Between Design Approach and Structural Failure	6-5
6-4	Assessment - Wing Fuel Tank Design for Post-Crash Fire Hazard Reduction	6-6
6-5	Assessment - Fuselage Fuel Tank Design for Post-Crash Fire Hazard Reduction	6-12
6-6	Comparison of Fuel Containment Requirements and Transport Airplane Design Practices	6-14
6-7	Comparison of Fuel Systems Installation Integrity Considerations	6-21
6-8	CRFS Fuel Cell Material Comparison	6-26
6-9	Preliminary Priority Rating of Fuel Containment Concepts	6-32
7-1	Comparison of Accident Study Data	7-1
7-2	Categorization by Scenario	7-3
7-3	Categories of Accident Severity	7-4
7-4	Categorization by Scenario Modified	7-5

LIST OF TABLES (Continued)

Tables		Page
7-5	Summary of Fatalities	7-6
7-6	Comparison of Reference 1 and Reference 3 Data	7-10
7-7	Normalized Data	7-11
7-8	Relationship Between Wing Failure Modes and Applicable Fuel Containment Concepts	7-12
7-9	Contribution to Fire Fatality	7-14
7-10	Benefit Distribution by Design Concept	7-19
7-11	U. S. Commercial Fleet Mix	7-33
7-12	Estimated Weight Penalties	7-36
7-13	Weight Penalty Vs. Potential Fatality Reduction	7-39

EXECUTIVE SUMMARY

This report describes a four phase study to identify potential fuel containment concepts for transport category aircraft. The study includes a review and evaluation of:

Accident crash test and analyses data
Design guidelines, specification and criteria
Design procedures
State-of-art technology
Design studies and recommendations

A literature survey was performed and the relative contributions from 53 documents are noted. Transport airplane data are summarized including the results from full-scale airplane crash tests and section tests. Analyses results which depict dynamic pulses are presented. Several reports including the U.S. Army Crash Survival Design Guide and the Special Aviation Fire and Explosion Reduction (SAFER) Advisory Committee are discussed in detail. Several fuel containment structural design concepts are evaluated with regard to both wing and fuselage application. The state-of-the art technology is summarized in a section of the report. A selection of approaches is described which includes the following:

1. Component Improvement
2. Wing structural modification
3. Fuselage tank crash resistant material

The selected concepts are reviewed with regard to benefit and penalties. The concepts are prioritized in order of effectiveness. The fuselage crash resistant fuel system (CRFS) is rated highest and has the greatest near-term potential. Wing structural modifications are considered long-term goals.

SECTION 1
INTRODUCTION

Several years ago the three major domestic airframe manufacturers completed a comprehensive review of civil aircraft accidents that occurred between 1959 and 1978. The results of these findings are reported in references 1 through 3 and summarized in reference 4. The review of transport airplane accidents has shown that transport airplane travel is a safe mode of transportation and that the trend with modern-day jets is improving. These studies, while identifying areas for improvement of occupant safety in survival crashes, also advocated improved design of airport environments, operating procedures and aircraft warning systems. In the accidents that have occurred, however, post-crash fire presents the greatest threat to occupant survivability. The fire hazard increases as the severity of the accident increases. To reduce the post-crash fire hazard through the potential application of improved fuel containment systems, it is necessary to first define the overall crash environment and then determine what effect the crash sequence will have on the integrity of the fuel system which includes tanks, lines, shut-off valves, and other related hardware. The problem of protection becomes more complicated when consideration is given to the fact that transport aircraft are involved in accidents in which the initial impact conditions and subsequent sequence of events vary, and that fuel systems (tanks, lines, engines) are located differently depending on configuration. Manufacturers of military aircraft, particularly helicopters, have used Crash Resistant Fuel System (CRFS) technology with apparent success. To a much lesser degree, CRFS technology is used by the manufacturers of light aircraft. The design requirements and crash impact environment for transport aircraft is much different than for the aforementioned aircraft types. Thus, in assessing the feasibility of using existing CRFS technology, it is important to understand the differences in both the design and the crash environment associated with the various categories of aircraft (i.e., transport, light fixed wing, rotary wing and high-speed tactical aircraft).

The initial program consists of engineering studies shown in figure 1-1. These studies involve four phases of effort. Phases I, II, and III include a review of the following material:

- Literature
- Transport Airplane Accident Data
- Transport Airplane Test and Analysis Data
- DoD Activity (U.S. Army Crash Surival Design Guide)
- Design Criteria (Federal Air Regulations (FAR) 25 and Military Specifications)
- Recommendations - Special Aviation Fire and Explosion Reduction (SAFER) Advisory Committee
- State-of-the-Art Technology

The Phase IV effort is a benefit/penalty study for CRFS concepts which, as a result of earlier findings, have been prioritized for potential future application. This phase includes:

- Hazard reduction
- Risk trends, deficiencies
- Penalties (cost, weight, volume)
- Availability

The flow diagram for the engineering studies is depicted in figure 1-2. This report provides a summary of these studies. The report is organized as depicted in figure 1-3. Previously presented data is reviewed and presented in Sections 2.0 - 4.0. Wing and fuselage containment concepts are discussed in Section 5.0. A state-of-the-art technology assessment is made in Section 6.0. This includes a summary of transport airplane data, an assessment of the post-crash fire reduction methods, a comparison of current design requirement/practices with U.S. Army design suggestions, all of which lead to

a preliminary priority ranking and a description of general approaches. The benefit and penalty analyses are performed in Section 7.0. Conclusions are presented in Section 8.0.

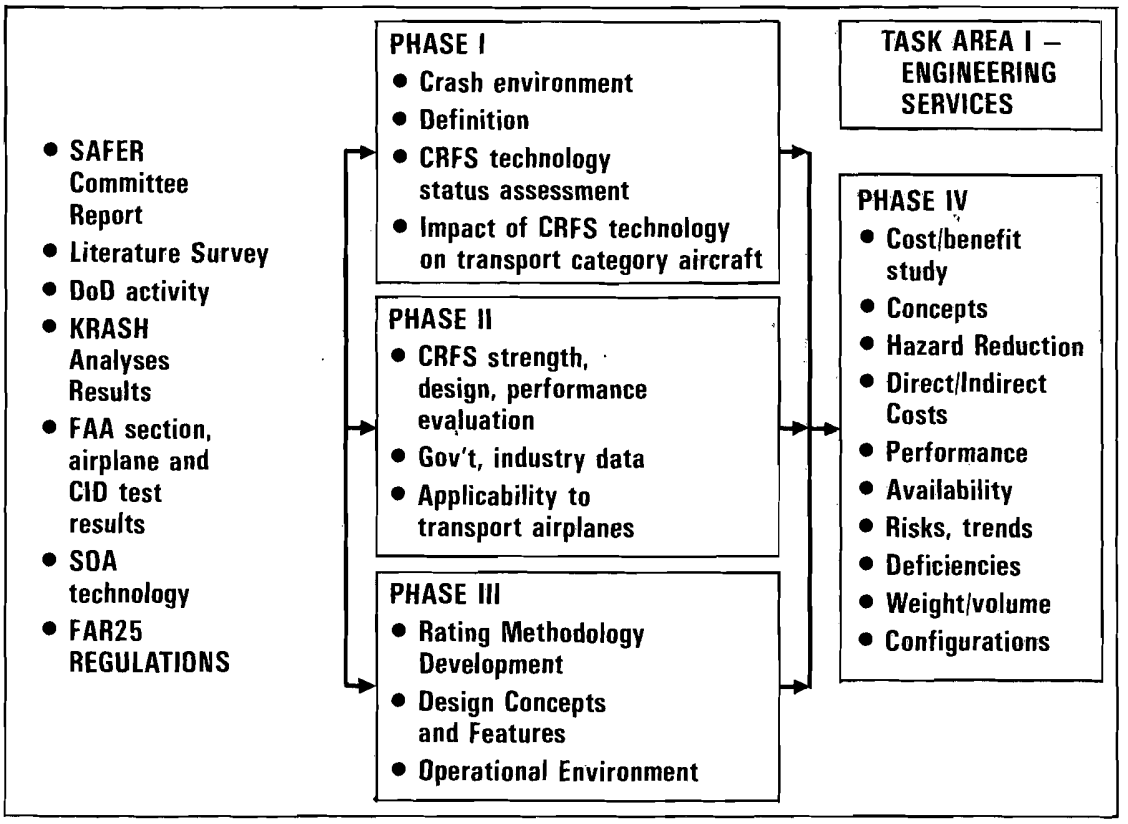

Figure 1-1. Engineering Studies

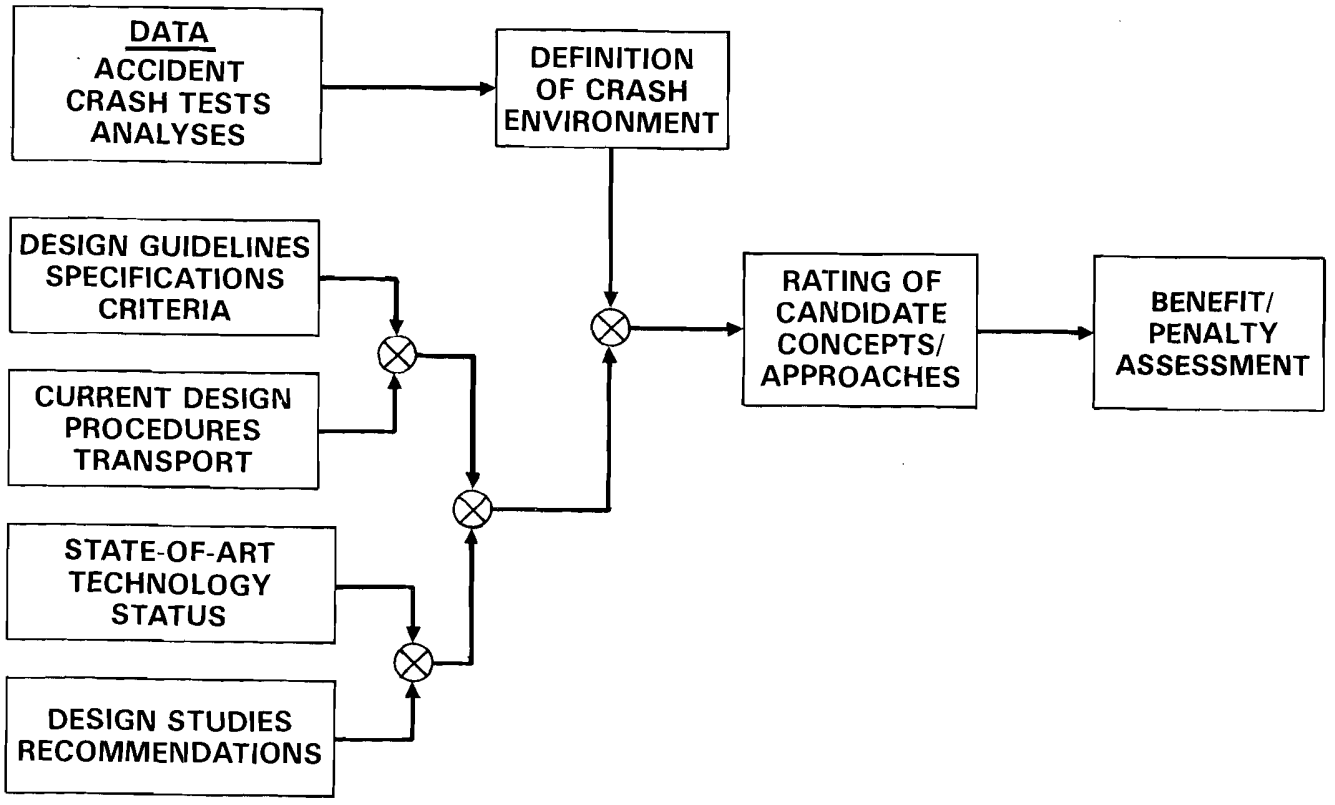

Figure 1-2. Flow Diagram - Development of Prioritized CRFS Technology for Transport Category Airplanes

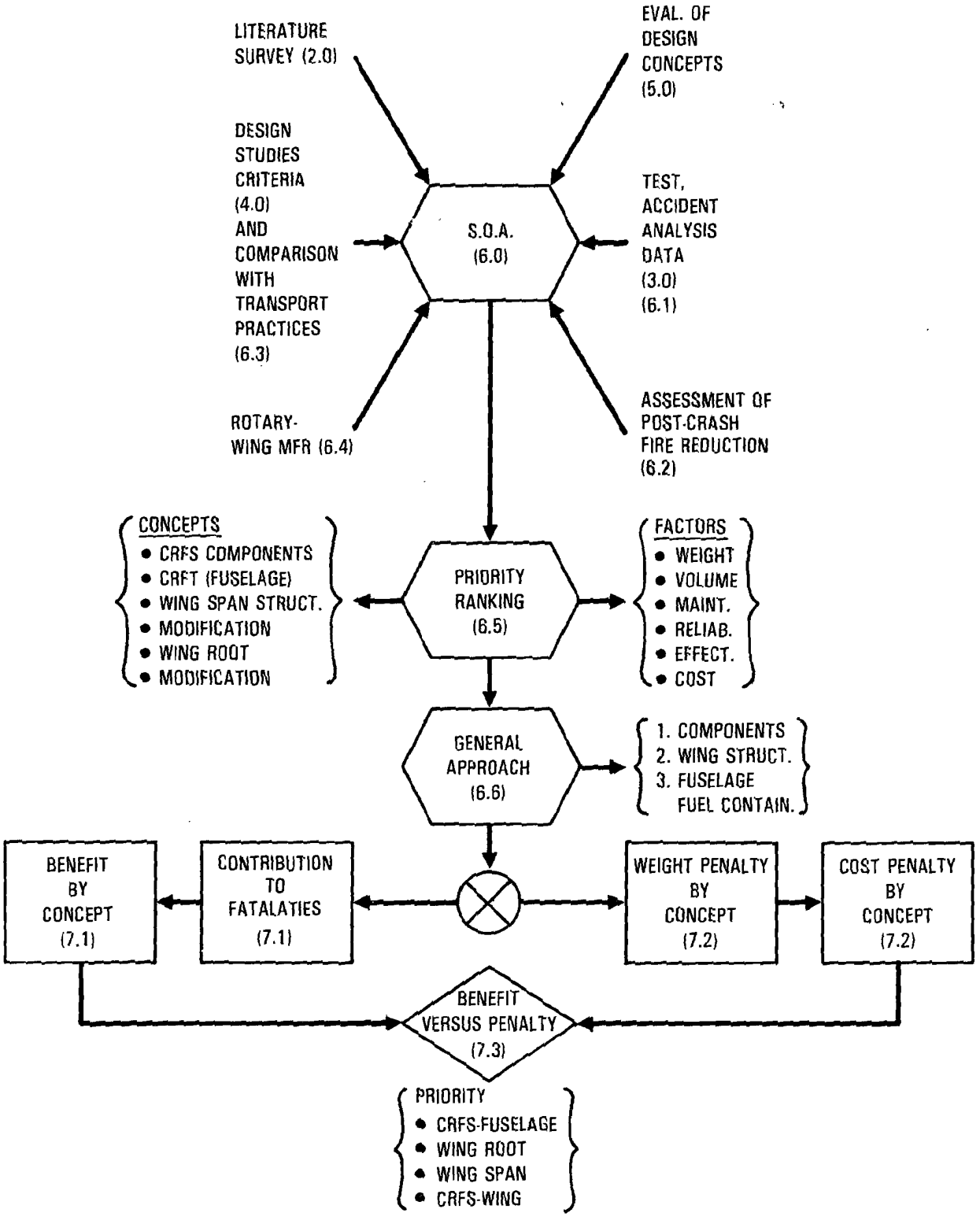

Figure 1-3. Report Organization

SECTION 2
LITERATURE SURVEY

Fifty-three reports, covering fuel system data and design specifications were reviewed. A list of the reports is shown in Appendix A. The reports include categorizing the data contained within each report with respect to several areas. These areas include:

- Aircraft configuration
  - Rotary-wing - (R)*
  - Light fixed-wing - (F)
  - Transport category - (T)
  - Military fighter or transport - (M)
- Crash resistant fuel system (CRFS) involvement
  - System - (o)
  - Fuel tanks - (T)
  - Fuel lines - (L)
  - Valves - (V)
  - Fittings - (F)
- Alternate Approaches
  - Forms and foils - (F)
  - Membranes, curtains, and liners - (M)(C)(L)
  - Elastomer coating and sealants - (S)
  - Wing leading edge and lower skin - (LE)(LS)
- Fire suppression, detection, and prevention
- Fuel tank location
  - Wing - (W)
  - Fuselage - (F)
- Analysis and design
- Design criteria
- Design concepts

*Denotes symbols in figure 2-1.

- Crash environment
- Accident data and statistics
- Test data
- Weight, volume, and cost data
- Failure modes
- Advanced materials
- Specifications

Also included in the review is one of the following three ratings assigned to each report:

A - Contains current data that is directly applicable for evaluating transferability of technology.

B - Contains background data.

C - Not pertinent to current study because data are either too limited, not current, or not applicable.

Figure 2-1 provides a matrix for the literature survey. The reports are grouped according to aircraft configuration as noted:

1-26	Transport category
27-34	Rotary-wing
35-38	Light fixed-wing
39-45	Military
46-53	Specifications, regulations

For the most part, the reports dealing with military aircraft are rated C because they address fire suppression, detection, and prevention methods other than crash-resistant fuel systems (CRFS). One of the major concerns in military design is the suppression of fire as a result of missile (bullet) penetration.

REPORT NO.	1	2	3	4	5	6	7	8	9	10	11	12	13	14	15	16	17	18	19	20	21	22	23	24	25	26	27	28	29	30	31	32	33	34	35	36	37	38	39	40	41	42	43	44	45	46	47	48	49	50	51	52	53
DATA																																																					
• AIRCRAFT CONFIGURATION	T	T	T	T	T	T	T	T	T	T	T	T	T	T	T	T	T	T	T	T	T	T	T	T	T	T	B/F	B	B	B	B/B	B	B	B	F	F	F	F	M	M	M	M	M	M	M	M	M	M	M	M	T	T	T	T
• CRFS							•		T	T		T/F												•			•				•	V	•	•	•	•	•		T														
• FUEL TANK LOCATION	W/F	W/F	W/F	W/F		W/F	F/W		W	W	W	W	W/F	W/F	W	F	F	F	F	F	W/F	W/F	F	W			F				F	F	F	F	W	W			F														
• ALTERNATE APPROACH									F	W	C/M																		M/S																								
• FIRE SUPPRESSION DETECTION PREVENTION																																						•		•	•	•	•	•	•								
• ANALYSIS/DESIGN									•	•											•	•	•	•			•			•	•								•														
• DESIGN CRITERIA							•			•												•	•	•			•			•	•	•	•	•				•	•														
• DESIGN CONCEPTS							•		•	•												•	•	•			•																										
• CRASH ENVIRONMENT		•	•	•		•	•			•		•	•	•													•											•															
• ACCIDENT DATA/STATISTICS	•	•	•	•	•	•																					•			•								•															
• TEST DATA								•		•	•	•	•	•	•	•	•	•	•	•	•	•	•	•	•	•		•				•	•	•	•				•															
• WEIGHT/VOLUME/COST DATA							•		•	•		•												•											•	•																	
• FAILURE MODES	•	•	•	•		•	•			•	•		•	•	•	•	•	•	•	•	•	•	•	•			•				•	•																					
• ADVANCED MATERIALS								•																			•												•															
• SPECIFICATIONS		•	•			•																					•			•		•													•	•	•	•	•	•	•	•
• RATING – CONTRIBUTION	A	A	A	A	C	B	A	C	B	A	B	B	A	A	A	A	A	A	A	A	A	A	A	A	B	B	A	B	C	B	B	B	B	B	B	B	C	C	B	C	C	C	C	C	C	A	A	A	A	A	A	A	A

Figure 2-1. Literature Survey Matrix

This aspect of design is not an objective of the current study. Report No. 39, which is a more recent publication, discusses designs in detail and addresses both crash design factors and composite materials. Report No. 40 is a manual which was prepared to provide aircraft mishap investigators with state-of-the-art data and guidelines for investigating aircraft fires and explosions. Reports 41-45, which were presented in 1975, provide little useful quantitative data.

Rotary-wing and light fixed-wing oriented information are contained in reports Numbers 27 through 38. Reports 30, 37, and 38 are rated C for the following reasons:

No. 30 - projectile penetration emphasis

No. 37 - general discussion and overall statistics

No. 38 - shows method for determining crash pulse definition for light fixed-wing aircraft.

Report Numbers 28, 29, 31, 32, 33, and 34 are a series of U.S. Army Air Mobility Research and Development Laboratory Reports which were published between 1969-1974. These reports contain data which appear to be included in the U.S. Army Crash Survival Design Guide. These several reports are rated B because they provide background data which are summarized in one document. State-of-the-art Report Numbers 35 (interim) and 36 (final) are rated B because they contain definitive data on potential weight and cost factors for wing installed fuselage tanks, albeit the information is for a light fixed-wing aircraft. Report No. 27 is rated A since it is both a comprehensive document on the subject as well as the latest publication. A detailed discussion of Report No. 27 will be provided as part of the evaluation effort.

Transport category aircraft reports are provided in reports Numbers 1 through 26. Two of these reports (Numbers 2 and 5) are rated C because of the insufficient amount of data to have any impact on this study. Report Numbers 6, 9, 11, and 12 are rated B on the basis of providing data which can be useful in future discussions on the subject. Report No. 6 is a 1981

publication which involves accident data review, the identification of post-crash fire scenarios, fire safety concepts, as well as cost/benefit parameters. Report Numbers 1-3, 4, 7, 10, 13, and 14 are given an A rating. Report Numbers 1-3 are the 1982 publications entailing the accident reviews performed by the three major domestic transport aircraft manufacturers and, thus, contain the most current comprehensive body of accident data. Report No. 4 is a summary of Report Numbers 1-3. Report No. 7 is the SAFER committee report which is a comprehensive summary of the fuel safety issue and incorportes a great deal of the findings prior to 1980. Report No. 10, while published over 20 years ago, contains some interesting concepts regarding fuel containment which bear review on the basis of recent accident data investigations. Reports 13-15 provide full-scale crash test data. The latter report is the recently completed CID test. Reports 16-19 describe narrow-body and wide-body airplane section drop tests and, as such, provide airframe responses and crush characteristics for vertical impacts. Reports 20-23 emphasize analysis and test data related to the crash environment. Report No. 24 describes the design, development and installation of a CRFS for a DC-7 transport. Report 25 describes tests of two concepts, articulated foam and reinforced wing structure to improve integral fuel tank crashworthiness performance. The articulated polyurethane foam tests involved an F-86 fuel tank to test the effectiveness of the foam in reducing fuel spray and leakage at impact. From these tests it was determined that 10 pores/inch and 60 pores/inch polyurethane foam have little effect on fuel misting and fuel spilling. The reinforced wing structure tests were performed with a DC-7 wing. The addition of a .040 inch-thick doubler strip to the upper and lower DC-7 wing skins did not appreciably decrease the vulnerability of the integral tank to leakage, but the front spar rails when reinforced by chordwise structural shapes did increase impact resistance. Report 26 describes tests using DC-7 wing structure to evaluate the strength of leading edge fuel tanks.

SECTION 3
TRANSPORT AIRPLANE DATA

3.1 ACCIDENT DATA

The transport airplane accidents that occurred between 1959 and 1978 were reviewed by the major domestic airframe manufacturers. The pertinent fuel containment related data from each of these reports (references 1, 2, and 3) is utilized in the accident data review. The essence of these reports has been summarized in reference 4. The following is an assessment of the data and results of the three accident studies.

1. Number of accidents reviewed

   176 accidents are contained in the combined data base. Figure 3-1 shows the distribution.

2. Aircraft type and size

   - FAR25 transport category aircraft ranging in gross weight from 12,500 pounds GTOW and higher.
   - Smaller short haul (to 160,000 lb) 40%
     - Larger short haul (160,000-250,000 lb) 20%
     - Narrow-body long haul (250,000 - 400,000 lb) 35%
     - Wide-body long haul (< 400,000 lb) 5%

3. Aircraft configuration

   - Wing mounted engines 60%
   - Aft-fuselage engines 37%
   - Combination of engines 3%

4. Operational phase

   - Percentages as shown in figure 3-2

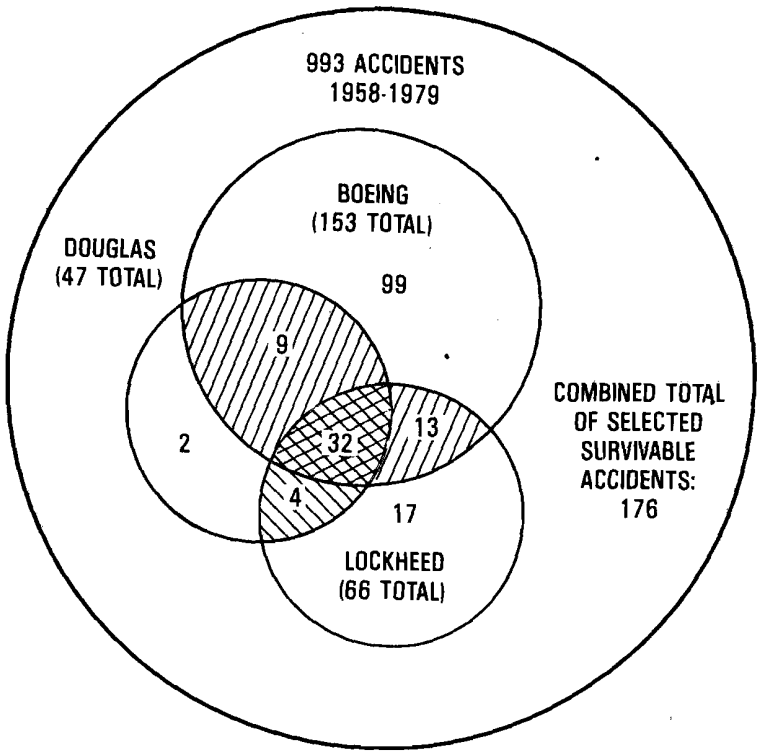

Figure 3-1. Selected Accident Study Database (Ref. 4)

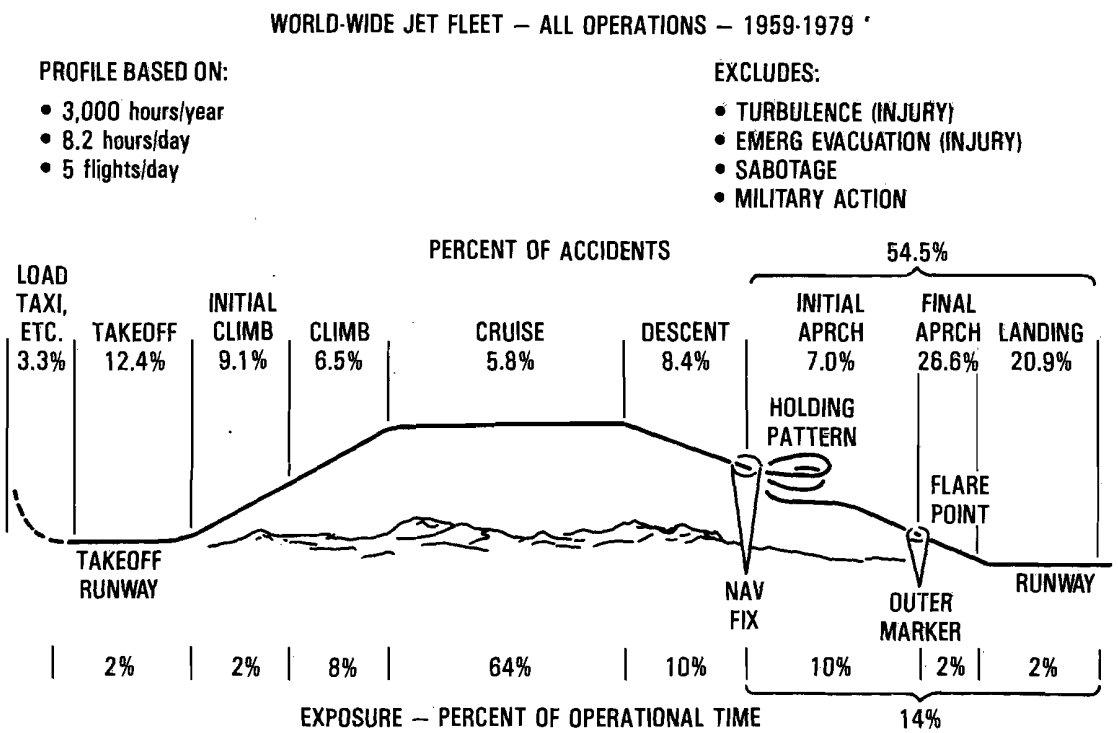

Figure 3-2. Accidents as a Function of Operational Regime (Ref. 1)

5. Definition of accident scenario

- Air-to-surface (ground) hard landing

- Air-to-surface (ground) flight into obstruction

- Surface-to-surface (ground) overrun involving obstacles

- Figure 3-3 shows fatalities as a percentage of total onboard, for an air-to-surface approach accident as a function of sink speed and including those that are fire-related. The data indicates a general increase in trauma-related fatalities occurring at aircraft sink speeds of approximately 25 ft/sec and above.

- Figure 3-4 shows similar data for injuries. This data exhibits no apparent trend, indicating that injury causing mechanisms may be more local in nature than global. Injuries are shown to occur at sink speeds of 10 fps and above.

- Figure 3-5 depicts representative crash scenarios and the sequences that result in potential fire hazards.

- The accident data does not completely quantify the crash environment. However, the data in the reports suggest impact conditions (nominal and ranges) associated with the accidents, i.e.:

  - Surface-to-Surface -1) occurs during overrun or take-off abort; 2) usually a symmetrical impact, although individual accidents show airplane can veer off as much as 30 degrees; 3) obstacles detrimental for fuel containment include: embankment, light pole, mound, sliding with gear removed; and 4) forward velocity in range of 40 knots to landing velocity.

  - Air-to Surface - 1) occurs as a result of an undershoot or hard landing on runway; 2) symmetrical or unsymmetrical impact; 3) gears usually extended; 4) average rate of descent 20 ft/sec; 5) range of rate of descent 10 - 40 ft/sec; 6) forward velocity V_{stall} to landing velocity; 7) pitch attitude range: -7.2° to +15° (avg. -4.4° to +4.7°); 8) roll attitude range: 0 to 40° (avg. 17°); 9) yaw attitude range: not defined.

  - Air-to-Surface, Impact with Obstacles - Same as air-to-surface, but with trees, poles and at higher approach velocities.

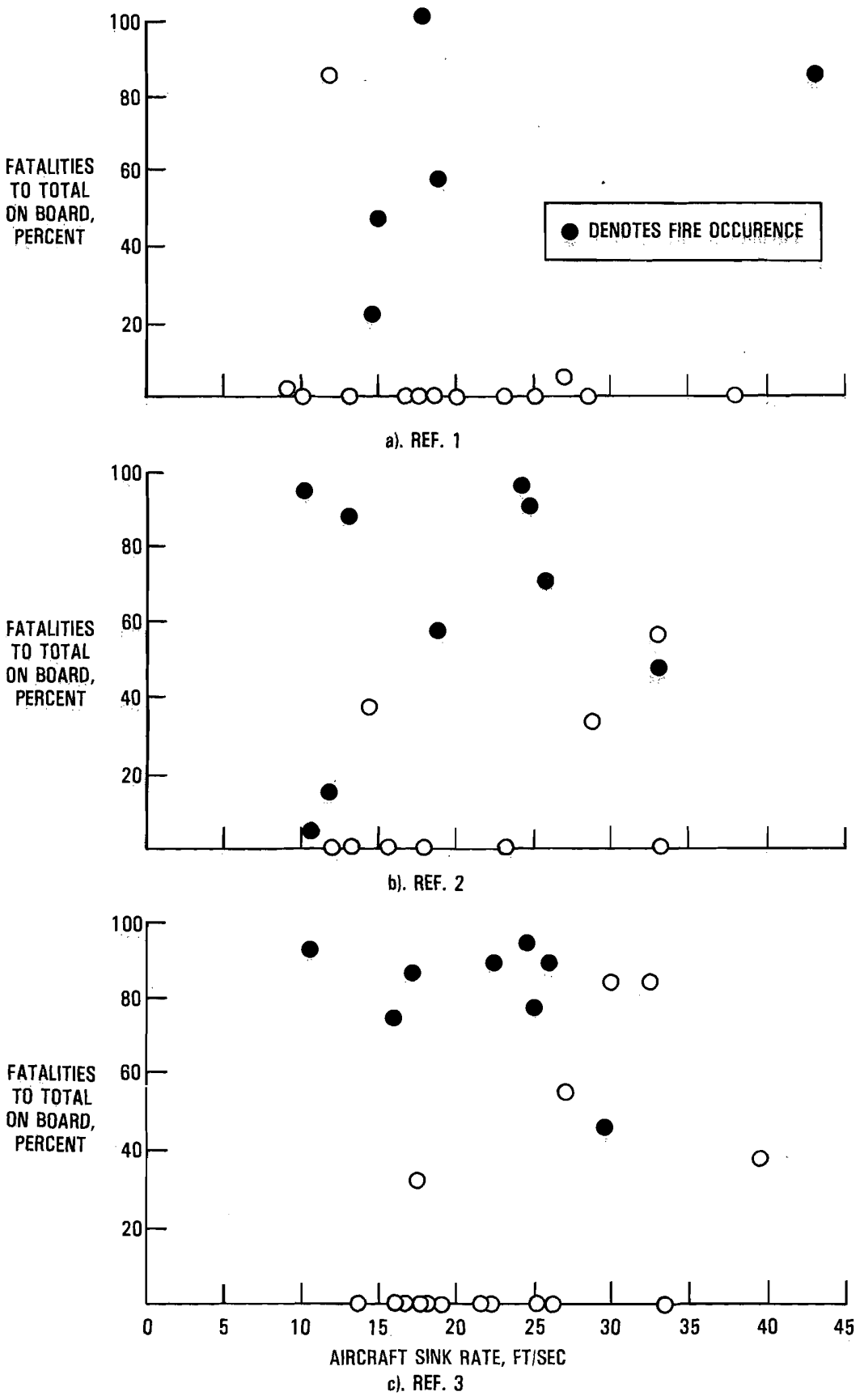

Figures 3-3. Fatalities as a Function of Sink Rate

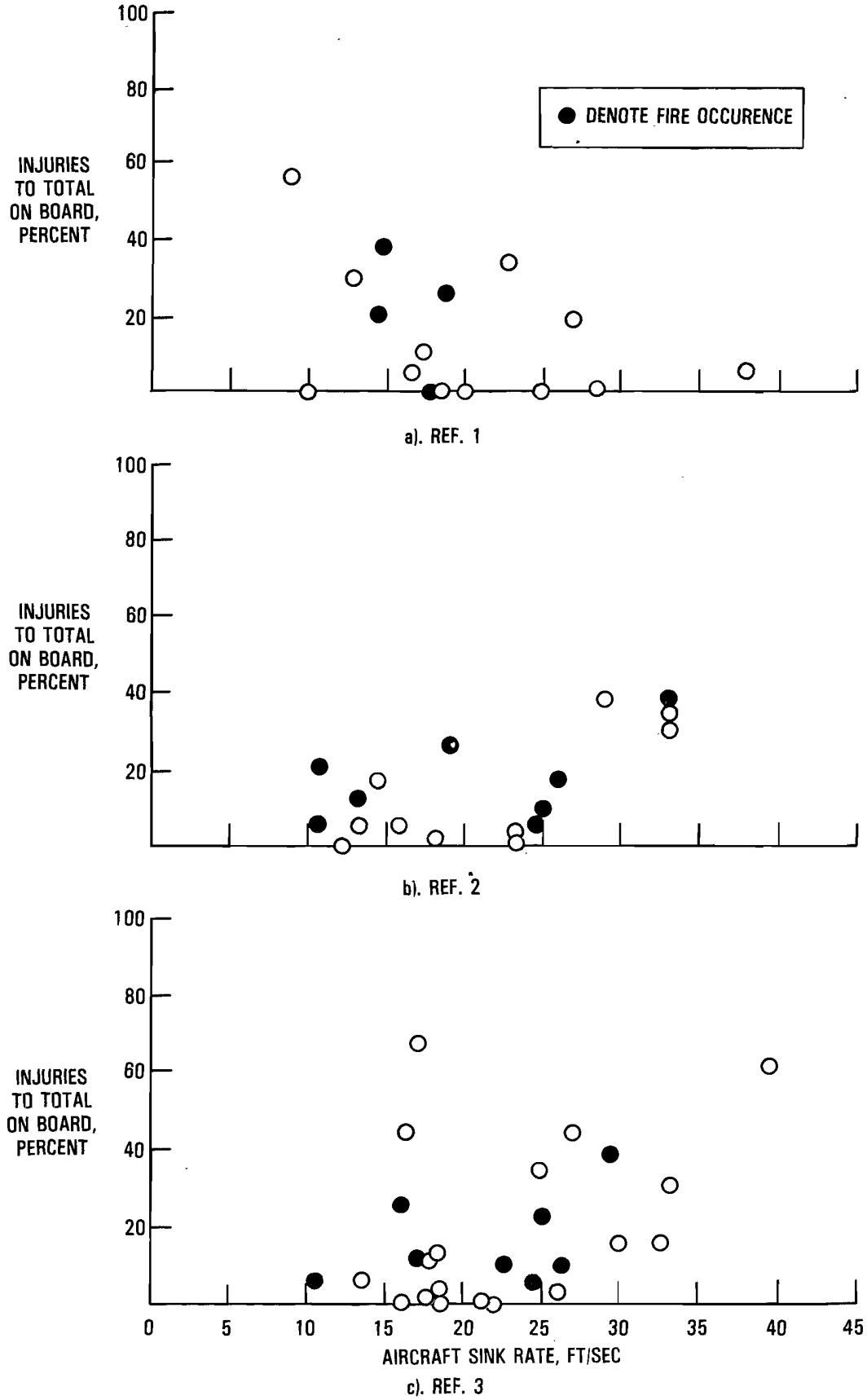

Figures 3-4. Injuries as a Function of Sink Rate

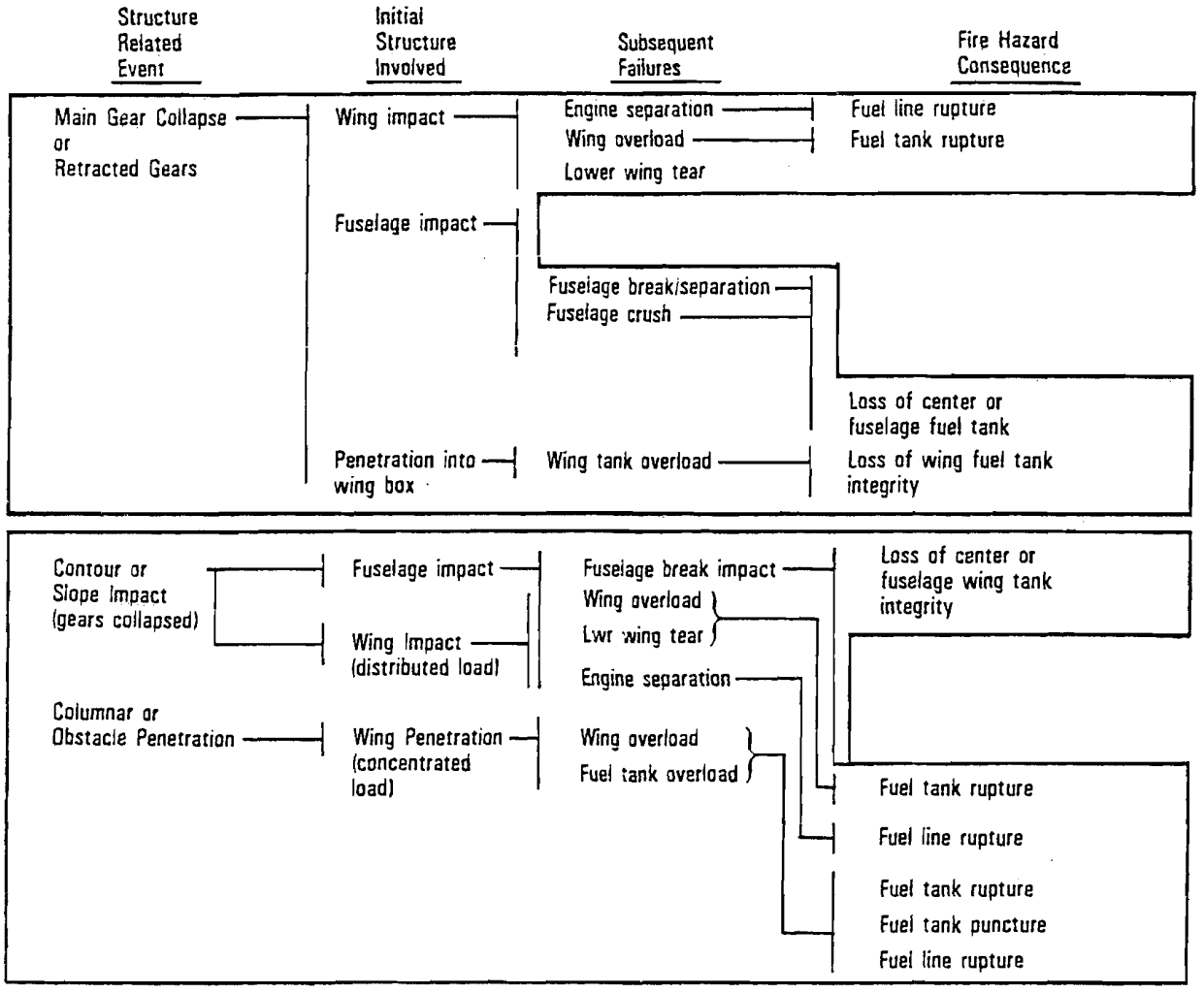

Figure 3-5. Accident Events which Lead to a Fire Hazard (Ref. 3)

6. Contribution to injuries and fatalities by structural features and subsystems.

   - The structural behavior of transport aircraft in accidents involving substantial hull damage, that are impact survivable, will contain the loss, destruction, or damage of one or more structural components or subsystems.

   - It was determined that the most critical event in the crash sequence that caused the most fatalities was the release and ignition of fuel creating a fire hazard.

   - In order to define approaches to improve crashworthiness of transport aircraft, it is necessary that the involvement of the structural components, systems, and subsystems be determined and the sequence of events and interaction of their involvement, in a variety of accidents, be well understood.

7. Failure mechanisms include:

   - Fuselage

     - Crush, bending, local deformation, and tangential damage

   - Gear

     - Separation and collapse

   - Wing

     - Breaks, wing box destruction, and distortion

8. Subsystem participation

   - On the basis of fatalities in percent of occupants, flight into obstructions is the most lethal accident followed by air to surface, unclassified, and then surface to surface.

   - The frequency of fire, while not independent of the total energy, further increases the lethality of the accident.

   - Considering total fatalities, the ranking of the accident scenarios are air-to-surface, flight into obstructions, surface-to-surface and unclassified.

   - No single scenario appears to be the major type of lethality; rather, each must be studied to fully understand the crash response of aircraft. Likely candidate scenarios would be air-to-surface impact on gear, surface-to-surface - low obstruction and flight into obstruction - impact column.

9. Factors in fatalities

- The major factor (reference 1) in fatalities is fire and smoke. There is a large number of unknowns which could represent a combination of trauma and fire. The role of trauma injuries in fire fatalities is undefined. An assessment of the interaction and role of these structural components in a crash environment is presented in the various reports.

10. Potential for improving crash performance

- Fire Hazard - Fire and smoke caused the most known fatalities. The greatest gain in crashworthiness might result from containment of fuel, which could reduce the fire hazard. Factors that affect the integrity of the fuel tanks need to be understood. Severe fuel fires have accounted for, directly or indirectly, approximately 36% of the fatalities in the study of 153 impact survivable accidents (reference 1). Hazards consist of burns from flame and hot gases, inhalation of smoke/fumes from fuel fire, inhalation of smoke/fumes from burning airplane/baggage/passenger materials (ignited by fuel fire), and panic/stampede of passengers due to fire/smoke effect.

- To prevent or reduce the numbers of these types of fatalities, the following research areas are identified:

  (1) <u>Fuel Containment</u>

  - Develop tank vessel/structure to be more resistant to tears, rupture, puncture, etc.

  - Develop wing box structure (assuming integral tank design) that will fail at predetermined locations when overload forces occur and include double fuel tank ends at these locations.

  - Develop fuel transfer/feed lines that are more resistant to rupture and, in the event of rupture, provide automatic shut-off of fuel flow.

  (2) <u>Tank Rupture</u>

  - Main landing gear collapse, or separation, allows the wing box to scrub on the runway or terrain and to impact low objects, or allow engine pods to scrub and separate. Main landing gear design that is more resistant to collapse or separation due to hard landings or travel over rough and soft terrain, would be effective in

reducing the number of fire-related accidents in which tear or rupture of the wing lower surface has occurred.

- Engine separation and tumbling under the wing has caused rupture or puncture in the wing box. Engine to strut, or strut to wing design, should be developed to reduce probability of separation.

- Fuel spill ignition has resulted from engine separation. During this occurrence the separation and arcing of electrical power leads can ignite fuel from broken feed lines. Designs to miminize arcing should be developed.

11. Concluding remarks

- The causative factors related to transport fatalities may not be well defined when many factors interact in the cabin area, or when the accident scenario is complex. However, much can still be learned from the historical study of accident data.

- It became evident from the accident data study that the greatest potential for improved transport crashworthiness is in the reduction of fire related fatalities. Retaining fuselage integrity and delaying entrance of smoke and flame is essential if survivability is to be enhanced. Fuel additives, as in the anti-misting kerosene research program, rupture resistant fuel tanks or fuel cells, and structural improvement to protect tanks and occupants, should be subjects of research.

- Structural integrity of fuel systems, fuselage, and landing gear are leading candidates for improved crashworthiness. Structural integrity of fuel systems is a key factor in suppression of post-crash fire.

3.2 SUMMARY OF TEST DATA

This section contains a summary of full-scale crash airplane section impact test results and fuel tanks. Included in this section are data pertinent to fuel containment from the following:

1. Full-Scale Crash Tests

- L1649
- DC-7
- B707 (Laurinburg)
- B720 (CID)

2. Airframe Section Tests

- B707
- DC-10

3. Concentrated and Distributed Load Tests

- DC-7 Wing Fuel Tank
- Wing Leading Edge Fuel Tank
- General Aviation Airplane Wing Tank

3.2.1 Full-Scale Crash Tests

3.2.1.1 L1649 and DC-7 Airplanes

These tests and their results are described in references 13 and 14, respectively. These tests simulated three types of accidents:

1. A hard landing with a high rate of sink, causing failure of a landing gear (air-to-surface scenario)
2. A wing low impact with the ground (air-to-surface flight into obstruction scenario)
3. An impact into large trees in an off-airport forced landing (air-to-surface flight into obstruction scenario)

Both tests involved impacts with sloped earthen mounds after the wings impacted the respective obstacles (pole and ground barriers). The DC-7 airplane impacted an 8-degree slope followed by a 20-degree slope. The L1649 impacted a 6-degree slope followed by a 20-degree slope. The initial 6-degree and 8-degree slopes represent the surface-to-surface crash scenario described in the three accident studies (references 1, 2, and 3). The DC-7 fuselage suffered a break aft of the crew compartment (FS 300) during the 8-degree slope impact. The aircraft suffered substantially more damage during the subsequent 20-degree slope impact. The L1649 airplane experienced fuselage structural breakup only during the 20-degree slope impact. A summary of wing tank failures for both tests follows.

The fuel tank layouts are shown in figures 3-6 and 3-7 for the DC-7 and L1649 test configurations, respectively. The wing obstacles barriers (poles and mound) and slope embankments were similar (except for the initial slope angles; 6 degrees for the L1649, 8 degrees for the DC-7). The layout of the test site is depicted in figure 3-8. For the DC-7 test the left wing barrier was inclined earthen mound 15 feet high with a 35-degree slope extending from the outer tip to the center of the left wing. The right wing barriers consisted of two standard telephone poles placed upright to impact the leading edge of the wing. The poles were set approximately four feet in the ground. The wing barriers were the same for the L1649 except that mound was 20 feet high and had a 30-degree slope. The extra height was used to ensure wing contact on the left side. The wing damages experienced are shown in tables 3-1 and 3-2. The airplane forward velocities at initial pole contact were approximately 139 Knts (235 ft/sec) for the DC-7 versus 112 Knts (189 ft/sec) for the L1649. The DC-7 gross weight was 107,952 lb (including 23,928 lb fuel simulated weight in the wings) versus 159,131 lb (included 48900 lb fuel simulated weight) for the L1649. Due to a failure in the primary data recording system all quantitative data was lost, except for a limited number of floor, seat and occupant accelerations, during the DC-7 test. A full complement of L1649 floor, occupant, seat and wing acceleration data was obtained during the L1649 test.

3.2.1.2 Laurinburg and Controlled Impact Demonstration (CID) Airplanes

The CID and Laurinburg full-scale crash tests are described in references 15 and 20, respectively. Both tests were performed in 1984.

The Laurinburg drop test was performed on June 29, 1984, using a B707 airplane under the following impact conditions:

- sink speed = 17 ft/sec
- pitch attitude = 1 degree nose-up
- roll/yaw attitudes = 0 degrees
- airplane weight = 195,000 lb.
- gear position = retracted (no gears installed)

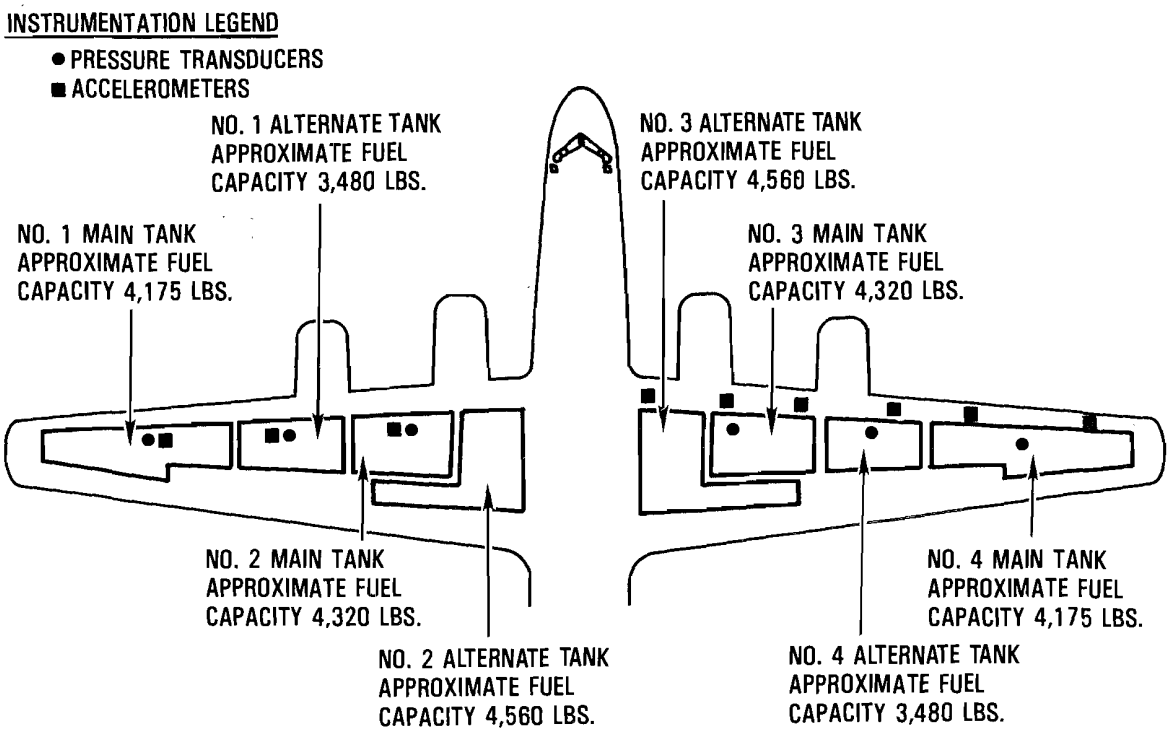

Figure 3-6. DC-7 Fuel Tank Layout and Instrumentation Locations

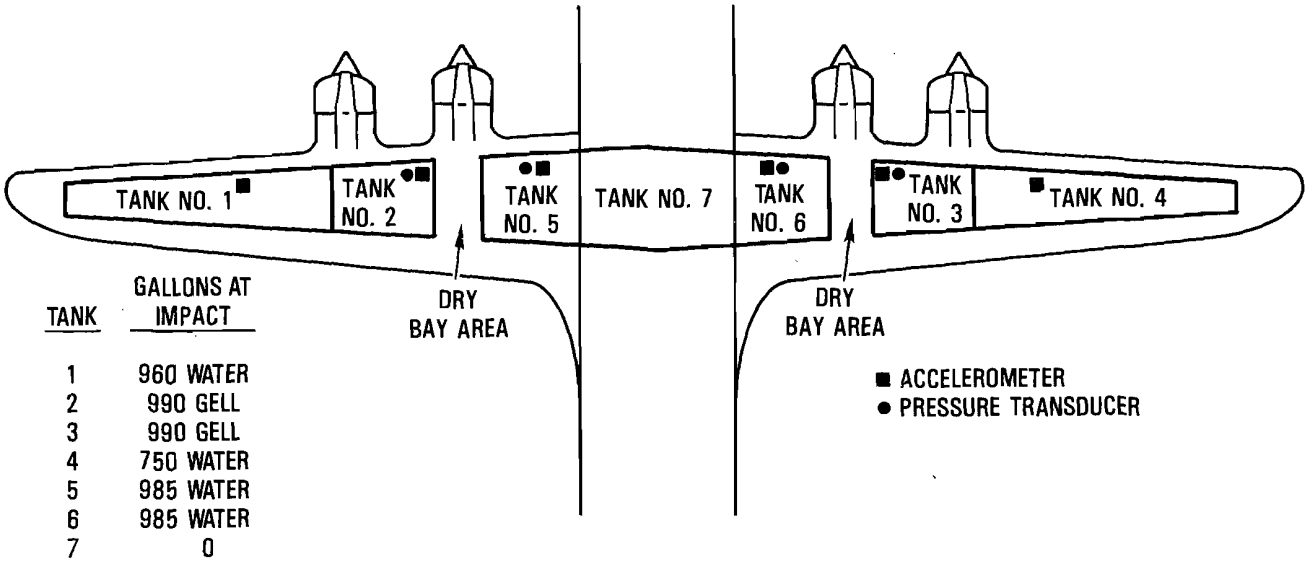

TANK	GALLONS AT IMPACT
1	960 WATER
2	990 GELL
3	990 GELL
4	750 WATER
5	985 WATER
6	985 WATER
7	0

Figure 3-7. L1649 Fuel Tank Layout and Instrumentation Locations

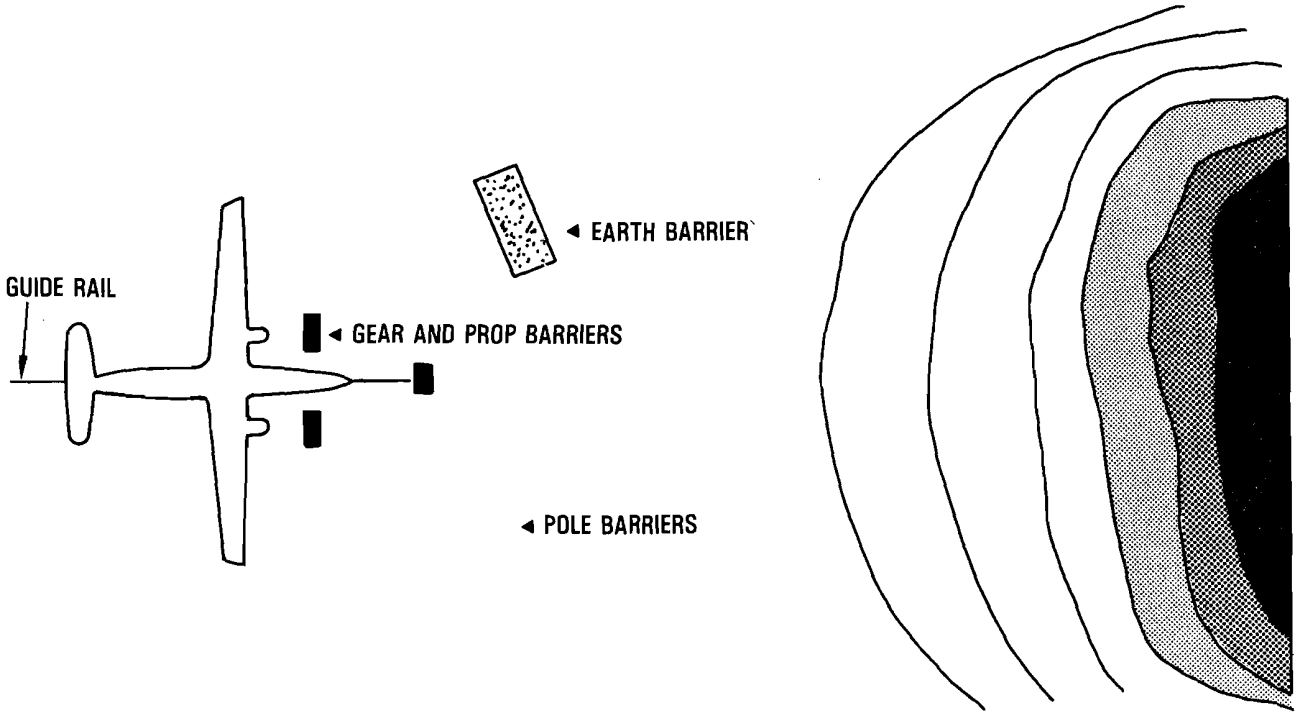

Figure 3-8. Layout of Obstacles for L1649 and DC-7 Full-Scale Crash Tests

The test was conducted to simulate the planned CID impact conditions except for forward velocity and aerodynamic loading. The B707 airplane is 100 inches longer (20 inches forward of FS620, 80 inches aft of FS960), than the CID B720 test article, but, basically of the same construction and design.

Damage to the aircraft was reviewed immediately after the impact and several weeks later, after the test vehicle had been lifted off the ground. It was estimated that the crush was about 2 inches, aft of the nose gear bulkhead; 4 inches, forward of the wing leading edge (FS620), and 11 to 13 inches, aft of the Main Landing Gear (MLG) Rear Bulkhead (FS960). The inboard wing engine pylons failed noticeably at the upper strut attach points from the pylon to the wing. The airplane sustained damage to the vertical centerline keel and FS960 bulkhead. The bulkhead web crack occured at the lower section and was traced up through to the floor. Fuselage underside damage is sustained from aft of nose gear bulkhead (FS300) to the aft cargo bay at FS1120. The extent of damage is more severe in the aft region as compared

TABLE 3-1. LEFT WING DAMAGE EXPERIENCED DURING L1649 AND DC-7 FULL-SCALE CRASH TESTS

Fuel Tank		
No.	Location	Description of Damage
L1649		
1	outboard	Ruptured when the wing impacted against the earthen barrier.
2	midwing	Ruptured, but time not indicated.
3	inboard	Fuel tank opened when the airplane contacted the 6-degree slope and the wing was partially separated at its root.
DC-7		
1	outboard	Received a glancing blow from the earthen barrier. Top of tank punctured and peeled back. Bottom of tank showed perforations and buckled.
1A	Alternate tank. Behind and outboard of Engine No. 1	No visible punctures and only slightly deformed. Leading edge separated outboard to inboard 28 inches on bottom and completely on top.
2	Midwing between No. 1 and No. 2 engines	Leading edge partially pulled free. Tank bottom and top punctured. Wing structure forward of spar torn free. Little crushing aft of the spar.
2A	Alternate tank-inboard near root	Left wing partially separated during 8-degree slope impact. Left wing completely torn off during 20-degree slope impact.

TABLE 3-2. RIGHT WING DAMAGE EXPERIENCED DURING L1649 AND DC-7 FULL-SCALE CRASH TESTS

Fuel Tank		
No.	Location	Description of Damage
L1649		
4	Outboard	Telephone pole sheared outer wing panel.
3	Midwing	Telephone pole cut into wing.
6	Inboard	Not ruptured.
DC-7		
4	Outboard	Telephone pole cut-off the wing 12 ft. from the tip. No. 4 tank ruptured. The pole impact totally destroyed the fuel tank. The wing was extensively buckled by the pole impact. The tank was destroyed during the impact.
4A	Alternate tank. Behind and outboard of Engine No. 4	Wing skin was separated spanwise from the forward spar. Several square feet of internal structure was buckled between the forward and center spar. The leading edge was compressed back flat against the forward spar.
3	Midwing. Between No. 3 and No. 4 Engines	Struck 2nd pole barrier. The pole penetrated three feet into the wing structure between the No. 3 and No. 4 engines and then broke. The wing broke (from leading edge to trailing edge) at this location due to pole impact. Three foot spanwise sections of spar cap and spar web were torn from the forward and center spar and deflected aft into the fuel tanks. The leading edge of the wing was torn free from the spar.
3A	Alternate Tank. Inboard Near Root	Experienced structural break at root during slope impact. Only jagged and torn metal remained. Wing separated during the 20-degree slope impact.

with the forward cargo bay. The post-test review of the crushed ducting along the wing box keel (FS620-820) indicates that the structure had deflected at least 6 inches, and possibly as much as 8 inches. The bulkhead at the wing trailing edge (FS820) ruptured and pushed the floor at that point up at least 4 inches at the center. The transverse beams and seat tracks at that location were severed. The frames between FS820 and FS960 exhibited damage and an outboard bulge of the fuselage above the floor was noticeable after the impact. Since no floor accelerations were recorded, it is difficult to relate the observed damage with quantitative response levels. That was done using analysis and is described later. The observed damage from this test is summarized below:

- Keel damage FS820-960 Bulkhead Damage at FS820 and 960.
- Cargo floor damage shows evidence of crushing in lower region and frame failures.
- Damage aft of FS960 much more extensive than forward of FS620.
- 6-inch ducting in wheel well region shows evidence of complete crush.
- While the inboard engine failed at its upper attach points it remained lodged between wing and ground.
- No wing fuel tank damage, due to the impact, except at the wing tip which initially contacted the ground.

The Controlled Impact Demonstration (CID) test was performed on December 1, 1984, at the NASA Dryden Lake Bed, Edwards Air Force Base, California (reference 15). The planned impact conditions are compared to the actual impact conditions in table 3-3. The complete CID impact and slide-out sequence, which includes wing cutter impact and subsequent initiation of post-crash fire, is shown in figure 3-9. The test aircraft was in an unplanned rolled and yawed to the left attitude just prior to initial ground contact. Subsequently, the aircraft impacted on the left wing outboard No. 1 engine, rotated onto the No. 2 engine and impacted the forward fuselage about 400 msec. after the No. 1 engine contact. Peak ground impact responses were developed within 500 msec. after initial fuselage ground impact and prior to contact with any ground obstructions.

The CID airframe and interior components were extensively instrumented. Airframe accelerations and bending moments were recorded for the wing and fuselage impacts. A total of 352 data channels were recorded. Most of the recorded data was for fuselage, floor, seat and occupant responses. However, a total of 22 channels of data was devoted to wing and engine accelerations and wing bending. The acceleration levels along the fuselage were generally relatively low, as can be observed from the distribution shown in figure 3-10. The fuselage underside crush measurements, which were taken at the conclusion of the test after the center keelbeam was damaged by a wing cutter and after the post-impact fire and had been experienced, are shown in figure 3-11, along with the Laurinburg drop test and analytical parametric study results.

3.2.2 Airplane Section Tests

The FAA/NASA has conducted an array of full-scale impact tests using typical transport aircraft sections. The tests were performed to examine structural failure mechanisms and experimentally defined the inherent structural response characteristics of airframes. The data base is being used in the development of crash dynamics analytical methodologies. The summary of section tests is presented in table 3-4. The results of two narrow-body airframe section tests, conducted with an impact velocity of 20 ft/sec, without and with underfloor cargo, are shown in figures 3-12 and 3-13 respectively. The fuselage frame sections shown in figures 3-12 and 3-13 are soft structure and the test results reflect relatively low frequency (with high frequency overtones) and low amplitude responses. By contrast, a hard section, such as depicted in figure 3-14, could produce higher g's with shorter durations under the test conditions presented in table 3-4. The fuselage center section, with proper wing loading, will actually crush much more than shown and produce broader, lower accelerations. The Laurinburg test, previously discussed, showed crush in the adjacent wing center section of 6 to 8 inches. The response of a wide-body airplane section, along without

TABLE 3-3. COMPARISON OF CID TEST PLANNED AND ACTUAL IMPACT CONDITIONS

	Planned	Actual*
Sink Rate, FPS	17^{+3}_{-2}	17.3
Gross Weight, Lb	175000 - 195000	192,383
Glide Path, Degrees	3.3 to 4.0	3.5
Attitude, Degrees	1 ± 1 (Nose-up)	0
Longitudinal Velocity, Knts	150^{+5}_{-5}	151.5
Roll, Degrees	0 ± 1	-13**
Yaw, Degrees	0 ± 1	-13***

* Impacted on left wing outboard engine. Subsequent impact on the forward fuselage occurred at the following conditions: 14 ft/sec sink speed, nose-down attitude (0 - 2.0 degrees), forward velocity 150 knots, contacted fuselage (BS 360 - 460 region).

** Left Wing Down

*** Nose Left

and with underfloor cargo, are shown in figures 3-12 and 3-13, respectively. The fuselage frame sections shown in figures 3-12 and 3-13 are soft structure and the test results reflect relatively low frequency (with high frequency overtones) and low amplitude responses. By contrast, a hard section, such as depicted in figure 3-14, could produce higher g's with shorter durations under the test conditions presented in table 3-4. The fuselage center section, with proper wing loading, will actually crush much more than shown and produce broader, lower accelerations. The Laurinburg test, previously discussed, showed deflection in the adjacent wing center section of 6 to 8 inches. The response of a wide-body airplane section, along with the failure modes, is

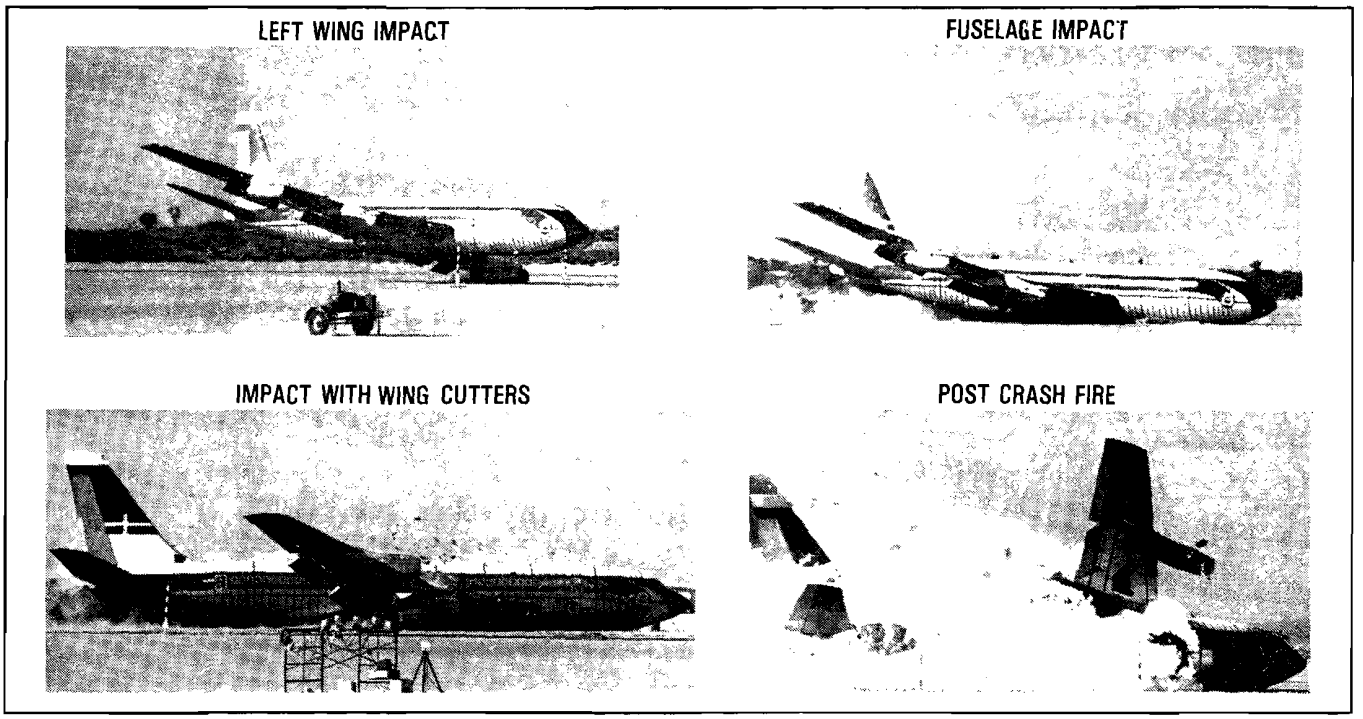

Figure 3-9. CID Impact Sequence

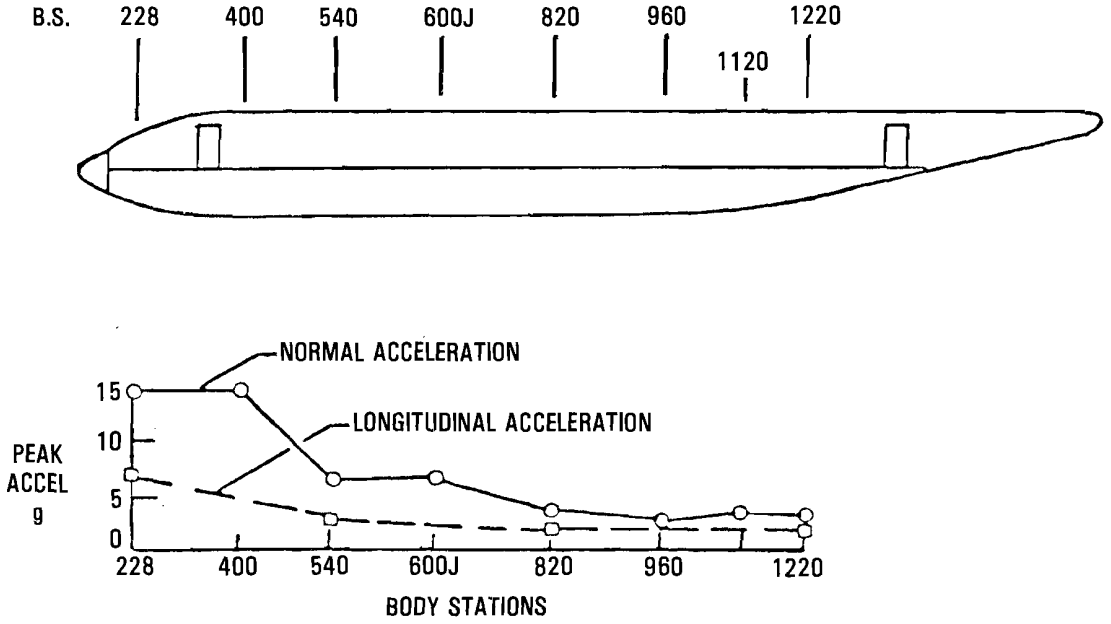

Figure 3-10. Floor Acceleration Peaks Distribution

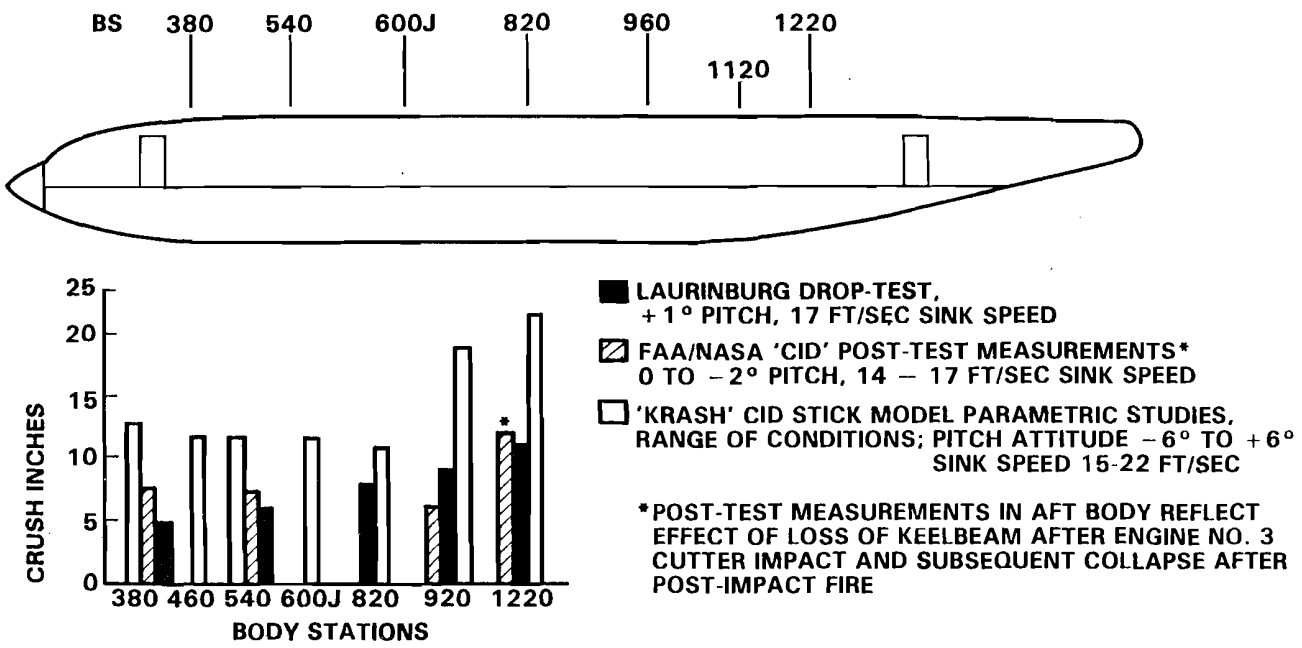

Figure 3-11. Lower Fuselage Underside Crush

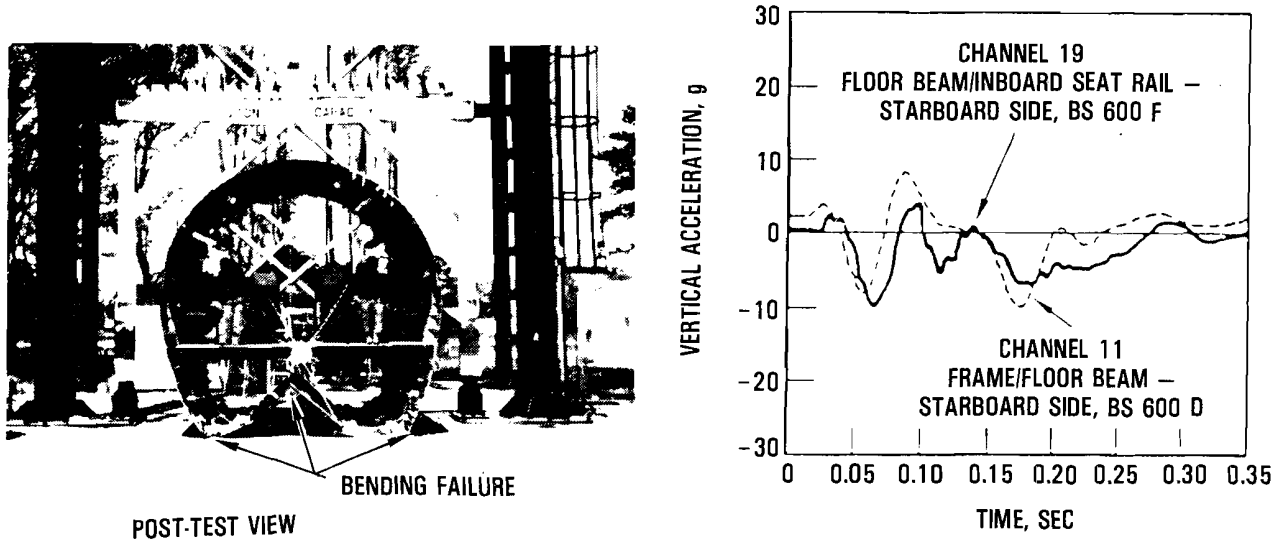

Figure 3-12. Results of Narrow-body Airplane Fuselage Section (Without Cargo) Test (Reference 17)

TABLE 3-4. FAA/NASA AIRFRAME SECTION IMPACT TESTS

Airplane Type	Test Specimen	Approximate* Weight (Lb)	Test Condition
Narrow Body	Forward Fuselage Section	5100	Vertical Impact (17) 20 FPS
Narrow Body	Center Fuselage Section	8000	Vertical Impact (19) 20 FPS
Narrow Body	Forward Fuselage Section with Cargo	6400	Vertical Impact (16) 20 FPS
Wide Body	Aft Fuselage Section	5000	Vertical Impact (18) 20 FPS

* Section, occupant and cargo

( ) Reference Reports

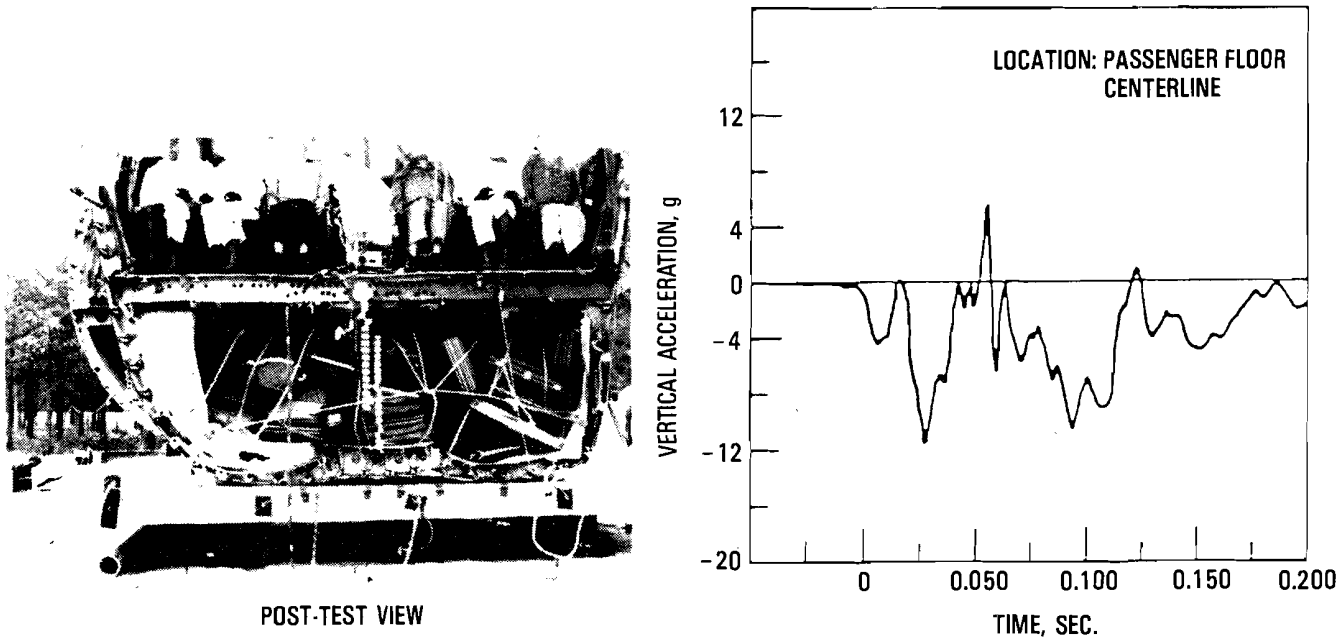

Figure 3-13. Results of Narrow-Body Airplane Forward Fuselage Section (With Cargo) Test (Reference 16)

shown in figure 3-15. The relatively light weight (table 3-4) of this specimen contributes to the higher g loading and limited amount of crush (approximately 2 inches). By way of contrast, the soft section with underfloor cargo impacted at the same velocity (20 ft/sec) produces almost 20 inches of crush (figure 3-16). As can be observed from figures 3-12 through 3-16, the floor pulses show a wide variation in peak deceleration and response shape. The pulses and resultant damage are a function of the design (floor support, frame segment), construction (frames, bulkheads) and loading (occupant, cargo). The data obtained from these tests are only applicable to fuselage located fuel tanks and for an air-to-ground impact. These data, along with the full-scale tests and analyses, provide some indication of fuselage crush and response levels that fuel tanks and supporting structure could be exposed to.

3.2.3 Concentrated and Distributed Load Tests

Several tests have been reported in which fuel tanks, fuselage sections, wing structure and/or complete aircraft have been used as specimens. The tests, while generally directed toward fuel containment, have not always been performed solely for that purpose. The tests involve three types of loading; concentrated, distributed and fuel inertia. These tests and their results are described in table 3-5. Several of the tests involving transport airplane structure tests were performed between 1964-1972. One test, involving general aviation wing structure, is also contained in the summary table. The L1649/DC-7 and recent (1980-84) Controlled Impact Demonstration (CID) full-scale test programs are included in the summary of data. For the most part the test results show:

- Fuel inertial dynamic pressure loading is not a factor in the survivable crash environment. Arrested stop tests have been performed in which the change in velocity (V) has reached 100 ft/sec with no fuel cell failure for conventional integral fuel tank design. During these tests a 21g acceleration level (28 g's if fuel were used) has been experienced. If one views the acceleration pulse as triangular in shape then the 21 g peak and 100 ft/sec velocity change would be nearly 0.30 seconds in base duration. This pulse is substantially higher than that experienced in severe full-scale crash tests such as the L1649.

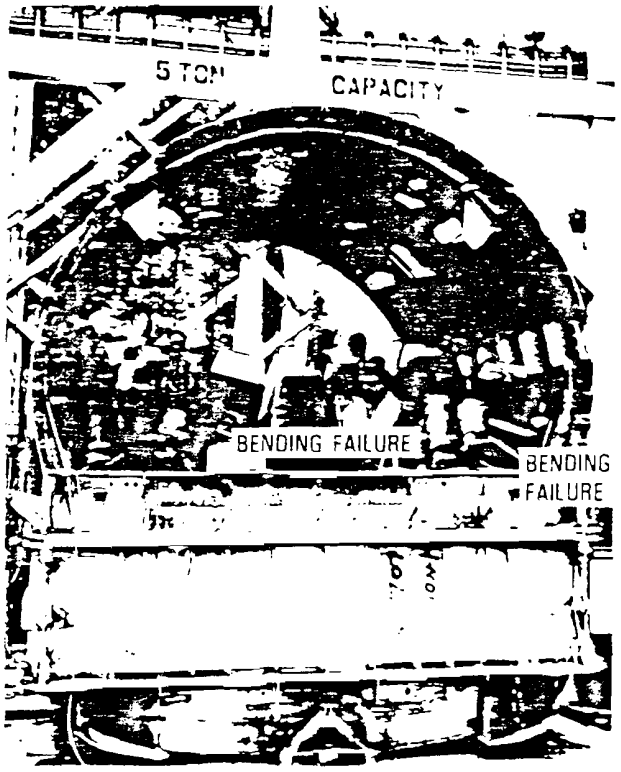

POST TEST VIEW

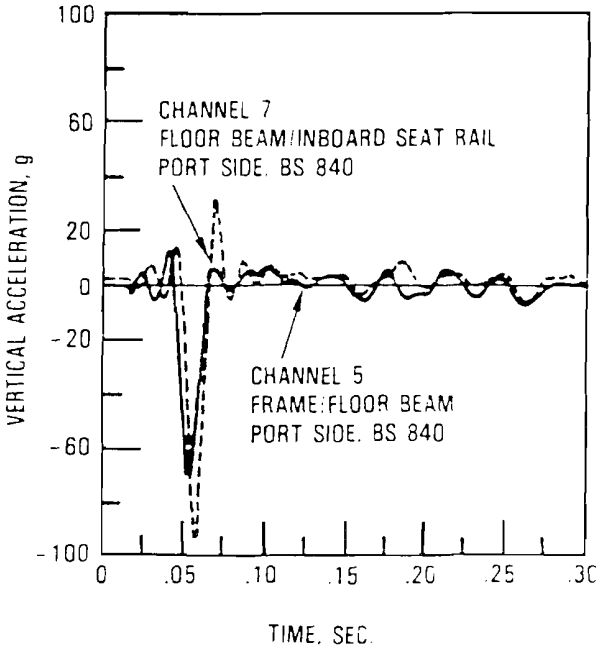

Figure 3-14. Results of Narrow-Body Airplane Fuselage Center Section Test (Ref. 19)

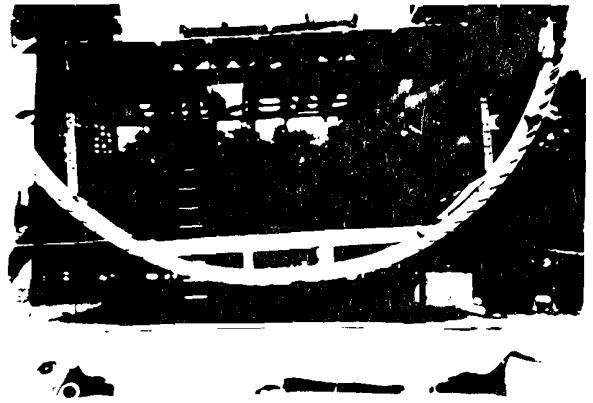

OVERALL STRUCTURAL DEFORMATION

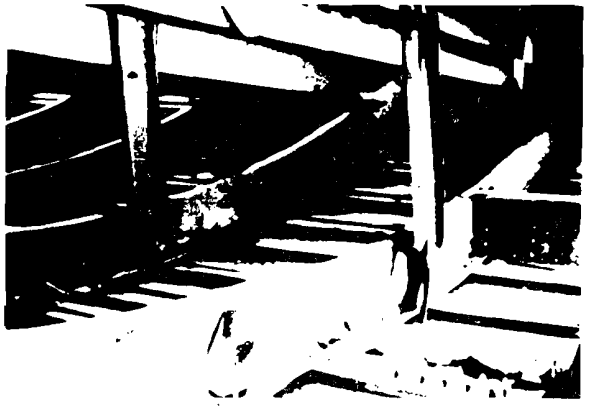

BUCKLING OF VERTICAL SUPPORT MEMBER

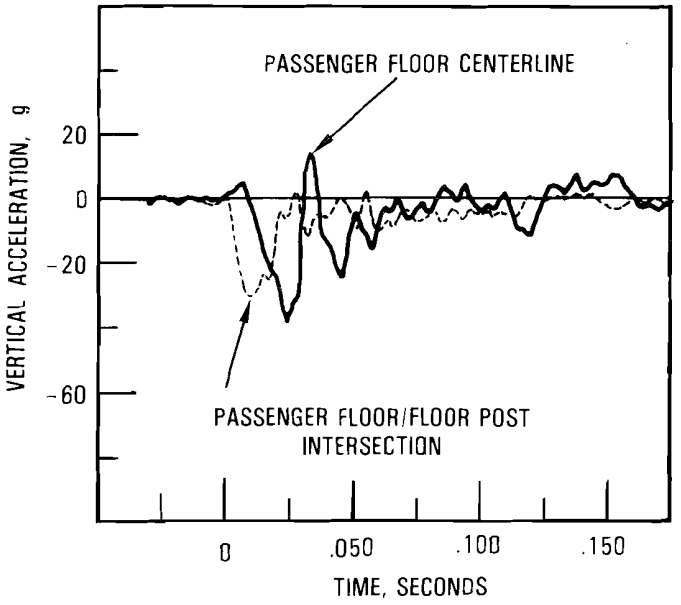

Figure 3-15. Results of Wide-Body Airplane Aft Fuselage Section Test (Ref. 19)

TABLE 3-5. SUMMARY OF CONCENTRATED AND DISTRIBUTED LOAD TESTS

REPORT/TEST TYPES	RESULTS
1. FAA-ADS-19 (1964) "STRUCTURAL DESIGN FOR FUEL CONTAINMENT UNDER SURVIVABLE CRASH CONDITIONS", NISSLEY, P.H. AND HEID, T.L. TANK SECTION SPECIMENS – 6 FT. SPAN 4 FT. CHORD 16 IN. DEPTH DESIGN VARIATIONS: REPRESENTATIVE DESIGN TO REINFORCED TANKS TEST TYPES: a) LOG IMPACTS - CONCENTRATED LOAD; ΔV = 13.9 TO 27.8 FT/SEC. b) ARRESTED STOPS - FUEL INERTIA LOAD; ΔV = 25.4 TO 44 FT/SEC. c) INCLINED MOUNT DISTRIBUTED LOAD; ΔV = 22 TO 40 FT/SEC. d) POLE BREAK IMPACT - CONCENTRATED; ΔV = 34.3 FT/SEC.	a) REPRESENTATIVE TANK DESIGN (FAILED, RUPTURE) * ΔV = 17.9 FT/SEC, 30.8G, 38.8 PSI REINFORCED TANK DESIGN (FAILED, RUPTURE) ΔV = 27.8 FT/SEC, 34.8G, 59.5 PSI b) REPRESENTATIVE TANK DESIGN (INTERNAL DAMAGE) ΔV = 31 FT/SEC, 15.2G, 21.5 PSI REINFORCED TANK DESIGN (NO FAILURE) ΔV = 44 FT/SEC, 15.4G, 35.6 PSI c) REINFORCED TANK (NO DAMAGE) ΔV = 40 FT/SEC, 20.71G, 28.9 PSI d) POLES (17.4 IN. DIAMETER FAILED) ΔV = 34.3 FT/SEC * PULSE BASE DURATION, PRESSURE, ACCELERATION .02 – .04 SEC. REINFORCEMENT ADDED = 28 LB = 10% WING DRY WEIGHT ESTIMATED OPTIMUM = 3% WING DRY WEIGHT
2. FAA-ADS-27 (1965) "DESIGN, DEVELOPMENT AND EVALUATION OF A CRASH RESISTANT FUEL SYSTEM INSTALLATION", BUCKSON, W., ET AL DC-7 WING, FUEL TANK FILLED WITH WATER, NO. 2 ST'D AND NO. 3 TANK – CRF COMPONENTS* * REPLACED EXISTING BLADDER CELLS WITH CRF CELLS, INCORPORATED CRFS; CELLS, VALVES, FITTINGS a) CONTROLLED DECELERATION-FUEL INERTIA LOAD b) POLE IMPACT-CONCENTRATED LOAD	a) CONTROLLED ACCELERATIONS 2-21GS, 32-60 KNTS (54-101 FT/SEC.) TESTS SHOWED THAT NO FUEL CELL FAILURE DUE TO DYNAMIC PRESSURE LOADS (28 PSI). b) TIME HISTORY OF FUEL CONTAINMENT IMPROVED WITH CRFS. FUEL FLOWED 17 MINUTES THROUGH INTERCONNECTIONS AND RUPTURED CELLS. VELOCITY = 77 KNTS (130 FT/SEC) 6.97% FUEL VOLUME LOSS 7.6% RANGE LOSS (1200 LBS. DECREASE WITH RANGE AND VOLUME LOSS, WEIGHT PENALTY TO ACHIEVE SAME VOLUME – 384 GALLONS -2360 LB.)
3. FAA-ADS-37 (1965) "FULL SCALE DYNAMIC CRASH TEST OF A DOUGLAS DC-7 AIRCRAFT", REED, W.H., ET AL INITIAL IMPACT VELOCITY = 139 KNTS (235 FT/SEC) a) POLES-CONCENTRATED LOAD b) INCLINED MOUND-DISTRIBUTED IMPACT FOR WING TIPS (15' HIGH, 35^0 SLOPE) c) EARTHEN SLOPED MOUNDS-DISTRIBUTED LOAD IMPACT (8^0, 20^0)	a) 1ST POLE CUT-OFF RIGHT WING 12 FT. FROM TIP AND DESTROYED OUTBOARD FUEL TANK. 2ND POLE PENETRATED 3 FT. INTO WING STRUCTURE. b) PERFORATED AND BUCKLED LEFT WING OUTBOARD TANK ON BOTTOM. WING BARELY CONTACTED THE MOUND. c) PARTIALLY SEPARATED BOTH WINGS WITH 8^0 SLOPE IMPACT. COMPLETELY SEPARATED BOTH WINGS WITH 20^0 SLOPE IMPACT. FUSELAGE BREAK ON BOTH 8^0 AND 20^0 SLOPE IMPACTS.

TABLE 3-5. SUMMARY OF CONCENTRATED AND DISTRIBUTED LOAD TESTS (CONT'D)

REPORT/TEST TYPES	RESULTS
4. FAA-ADS-38 (1965), "FULL-SCALE DYNAMIC CRASH TEST OF A LOCKHEED CONSTELLATION MODEL 1649 AIRCRAFT", REED, W.H., ET AL INITIAL IMPACT VELOCITY = 112 KNTS (189 FT/SEC) a) POLES-CONCENTRATED LOAD b) INCLINED MOUND-DISTRIBUTED LOAD IMPACT FOR WING TIPS (20 FT. HIGH, 30° SLOPE) c) EARTHEN SLOPED MOUNDS-DISTRIBUTED LOAD IMPACT; (6°, 20°)	a) POLE SHEARED OUTER WING. POLE CUT INTO MID-WING AREA. b) MID AND OUTBOARD TANKS RUPTURED. c) INBOARD FUEL TANKS OPENED AND WING PARTIALLY SEPARATED ON 6 DEGREE SLOPE IMPACT. TWO FUSELAGE BREAKS AT 20 DEGREE SLOPE IMPACT. TWO FUSELAGE BREAKS AT 20 DEGREES SLOPE IMPACT.
5. FAA-RD-70-56 (1970) "INVESTIGATION OF TWO METHODS FOR IMPROVING THE CRASHWORTHINESS OF INTEGRAL FUEL TANKS", A.H. AHLERS DC-7 INTEGRAL WING; 40 FT/SEC DISTRIBUTED LOAD IMPACT. a) UNMODIFIED b) MODIFIED, .040 INCH THICK DOUBLER c) MODIFIED, .020 INCH THICK DOUBLER, PLUS 1½ IN. T SECTIONS	a) FAILED b) FAILED c) NO FAILURE – ESTIMATED WEIGHT INCREASE (OPTIMUM DESIGN) 40 LB OR 4% WING EMPTY WEIGHT.
6. FAA-RD-72-83 (1972) "WING LEADING EDGE FUEL TANK IMPACT TESTS", HACKLER, L.W. LEADING EDGE OF FUEL TANK OF FOUR-ENGINE JET TRANSPORT – CONCENTRATED LOAD a) LOG IMPACT b) STEEL PIPE IMPACT c) BIRD IMPACT (4 LB.)	a) LEADING EDGE FAILURE AT 93 MI/HR (136 FT/SEC) b) LEADING EDGE FAILURE AT 74 MI/HR (108 FT/SEC) c) NO FAILURE AT 314 MI/HR (460 FT/SEC) <u>NO FUEL IN TANKS.</u>
7. NASA REPORT 2395, "FULL SCALE TRANSPORT CONTROLLED IMPACT DEMONSTRATION" CID – 1984 – DISTRIBUTED LOAD IMPACTS a) FRAME SECTION VERTICAL CRUSH – SINK SPEED = 20 FT/SEC (VERTICAL) b) 'LAURINBURG AIRPLANE DROP – SINK SPEED = 17 FT/SEC (VERTICAL) c) CID AIR-TO-GROUND IMPACT SINK SPEED = 17.3 VERTICAL FWD. VEL. = 150 KNTS (260 FT/SEC) ROLL, YAW = 13 DEGREE PITCH = +1 DEGREE	a) APPROXIMATELY 20 INCHES CRUSH – 8-10G (PEAK BASE DURATION – .10 TO .15 SECONDS). b) CRUSH VARIES FROM 4-6 INCHES IN FORWARD FUSELAGE, 6-8 INCHES IN MID-FUSELAGE AND 8-12 INCHES IN AFT FUSELAGE. c) NO FUEL SPILL; WING TIP FAILURE AND ENGINE LOSS AT IMPACT. FUSELAGE CRUSH – 6 INCH FORWARD FUSELAGE TO 12 INCHES AFT FUSELAGE FLOOR ACCELERATION – 14G AT FORWARD FUSELAGE REDUCING TO 4Gs AT AFT END IN THE VERTICAL DIRECTION. LONGITUDINAL PULSE APPROXIMATELY HALF THE MAGNITUDE OF THE VERTICAL PULSE.

TABLE 3-5. SUMMARY OF CONCENTRATED AND DISTRIBUTED LOAD TESTS (CONT'D)

REPORT/TEST TYPES	RESULTS
8. FAA-RD-78-28 (1978) "TESTS OF CRASH RESISTANT FUEL SYSTEM FOR GENERAL AVIATION AIRCRAFT"; W.H. PERRELLA GENERAL AVIATION AIRPLANE WING – CONCENTRATED LOAD IMPACT POLES-IMPACT VELOCITY = 93-95 FT/SEC REPLACED BLADDER TYPE WITH CRFT	NORMAL BLADDER TYPE = 9.6 LB. CRFT AND FITTINGS = 20.8 - 33.8 LBS. (2 SINGLE PLYS) VOLUME REDUCTION = 1.4 - 4 GALLONS (55 GALLON TANK) TEST RESULTS — PEAK G FWD/UP — AVG G FWD/UP — TIME DURATION (AVG. G) FWD/UP #1 — 15/5 — 10/3 — .14/.14 #2 — 29/57.5 — 10-12/5 — .10/.10 #3 — 38/55 — 15/27 — .08/.05
9. FAA-RD-71-27 (1971) "CRASH RESISTANT FUEL SYSTEMS DEMONSTRATIONS AND EVALUATION", SCHEUERMAN, H.P. SIX DC-7 WING SECTIONS WITH BASIC CRASH RESISTANT BLADDER CELL FUEL SYSTEMS, AND 75 MPH (110 FT/SEC) a) STANCHION/POLE-CONCENTRATED LOAD – 15 MPH (37 FT/SEC) b) STANCHION/POLE-CONCENTRATED LOAD – 75 MPH (110 FT/SEC)	a) 21,800 LB. IMPACT LOAD; STANCHION PENETRATED THROUGH LEADING EDGE OF SPAR CAP. NO DAMAGE OCCURRED TO BLADDER TANKS. 30,000 LB. IMPACT LOAD – DAMAGED SPAR CAP, NO DAMAGE TO BLADDER CELL. 47,000 LB. IMPACT LOAD – SPAR CAP AND WEB WERE COMPLETELY FRACTURED. STANCHION PENETRATED 16 INCHES INTO MIDDLE CELL TRIGGERING VALVE MECHANISM. OUTBOARD TANK WAS CUT AND 6 GPH LEAKAGE OCCURRED. b) 30,400 LB. IMPACT LOAD; STANCHION PENETRATED 8 INCHES PAST BROKEN SPAR CAP, TEARING THE CENTER CELL AWAY FROM ITS FRANGIBLE FASTENINGS TO THE WING STRUCTURE. VALVE CLOSURE WAS TRIGGERED. 10 GPH LEAKAGE RESULTED. 47,200 LB. IMPACT LOAD – STANCHION PENETRATED 12 INCHES PAST SPAR CAP, TEARING CENTER CELL AWAY FROM ITS FRANGIBLE FITTING AND ACTIVATING VALVES. CENTER TANK FILLER CAP BROKE AND SPILLAGE OF FUEL ENSUED. LEFT AND RIGHT TANKS HAD NO LEAKAGE. EST. LOSS OF VOLUME 15% EST. WEIGHT PENALTY 46 LBS/120 GALLONS - 5.4%

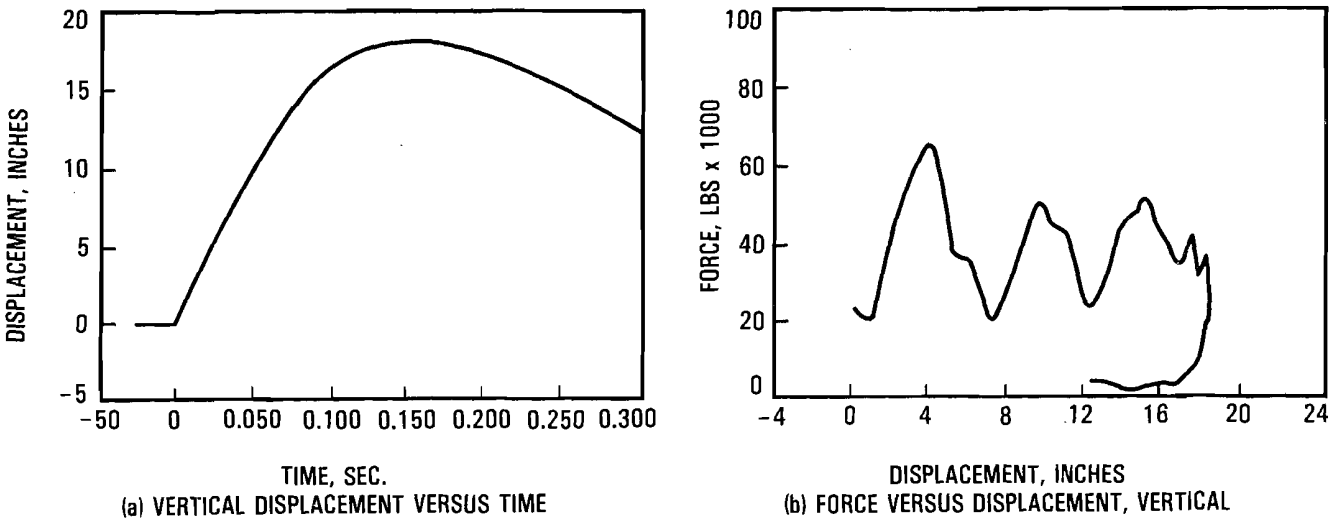

Figure 3-16. Narrow-Body Frame Section Displacement and Force Test Results (Reference 16)

- Improvements in the design of the wing for fuel containment can be achieved with a CRFS for concentrated impacts e.g., tree, pole. However, the maximum impact velocity, for a CRFS installation was 130 ft./sec. The loss in fuel volume and range for the CRFS in this situation (reference 24) was about 7 percent and 7.6 percent, respectively. The fuel loss for the wing fuel system for the DC-7B airplane was 384 gallons which weighs 2360 lb. The CRFS could add about 3 percent of dry wing weight. Other test installation of a similar airplane wing section showed up to 15 percent volume loss and a 5.4 percent weight penalty for 120 gallons of fuel loss in tests up to an impact velocity of 110 ft/sec and impact force of 47,000 lb (reference 12). Tests of a transport airplane conventional wing fuel tank leading edge indicated that failure would occur in the impact velocity range of 108 to 136 ft/sec, depending on the type of obstacle (steel pipe or log). Since no fuel or representative weight was used in these tests, it is expected that these impact velocities are high. An impact into a pole or tree with the airplane moving forward at 140 ft/sec can be related to the average velocity of overrun accidents, where 29.4 percent of the onboard occupants are fatalities in airplanes which experience fuselage breaks. In a test of a general aviation airplane wing (reference 36), improved with a crash resistant tank, an impact velocity of 95 ft/sec was achieved with satisfactory results. The penalty for this design was up to 7.4 percent fuel

volume loss. There was a 11 lb to 24 lb weight penalty for a 59 gallon tank retrofit of an existing bladder tank. The penalty associated with this change could be 5 percent of wing empty weight.

- Improvements in the design of the wing for fuel containment can be achieved with structural reinforcement for distributed impact loads. Tests of both modified wing tank sections and wings (reference 10) showed capability to withstand a change in velocity of 40 ft/sec. The estimated weight penalty is 3 percent to 4 percent of the wing dry weight. Structural modifications to achieve improvement to withstand distributed impacts will also be beneficial in resisting higher fuel inertia loads. The tests for distributed loadings at a velocity of 40 ft/sec are substantially below the survivable crash environment. Accident data show that at an average forward velocity of 96 ft/sec, 6.3 percent of the onboard occupants in airplanes which experience fuselage breaks, suffer fatalities. This ratio increases to 29.4 percent and 77.8 percent at forward velocities of 140 and 230 ft/sec., respectively. Tests of the L1649 and DC-7 involving wing contact with an inclined mound at impact velocities of between 189 and 235 ft/sec devastate the fuel tanks. The CID test, on the other hand, showed that for the wing low distributed impact load as a result of a roll condition, fuel can be contained in current designs for at least 13 degrees roll, and at an impact sink speed 17.3 ft/sec.

3.3 ANALYSES RESULTS

Several analyses have been reported in references 20-23 which are pertinent to the evaluation of fuel containment concepts. The studies described in references 20, 21, and 22, are recent. Reference 20 describes pre-CID analyses. The planned impact was a symmetric condition (no roll or yaw) with 1 degree nose-up pitch, a 150 knot forward velocity and a 17 ft/sec sink rate. The actual impact was unsymmetrical. The correlation with the unsymmetrical CID impact data is reported in reference 21. In general, the analysis results agree with the test results, as can be seen from comparison in figure 3-17 through 3-20. Figure 3-17 shows the fuselage vertical response distribution. Figures 3-18 and 3-19 show the bending moment comparison for the fuselage and wing, respectively. The major damage associated with the air-to-ground impact was the loss of the left outer wing and the left wing engines. The fuselage responses were considered low relative to airframe strength. The left wing response is shown in figure 3-19 to be close to its estimated bending strength. The KRASH correlated model (reference 21) was

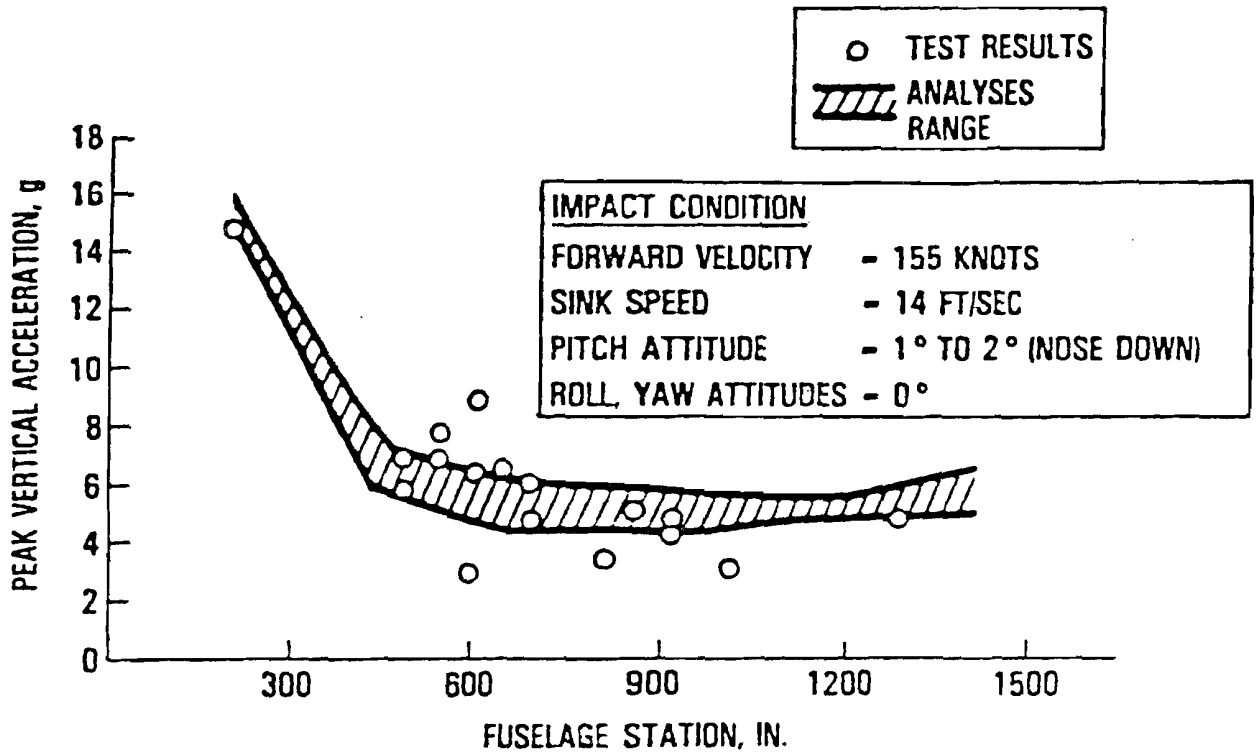

Figure 3-17. Comparison of Post-Test CID Krash Analyses and Test Results for Fuselage Impact

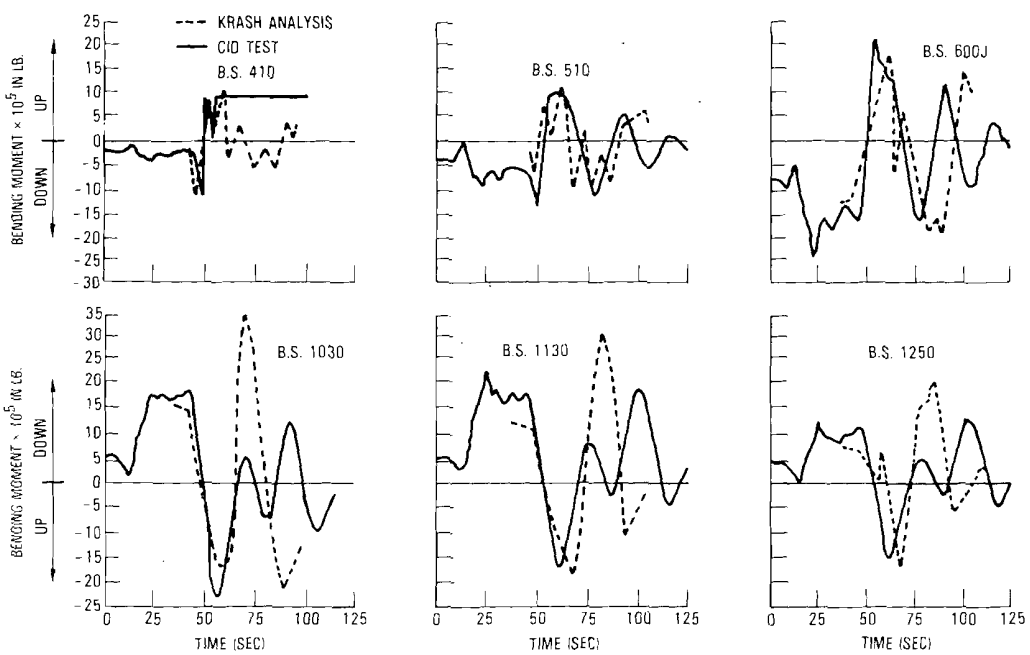

Figure 3-18. KRASH Versus CID Test Results, Fuselage Bending Moments

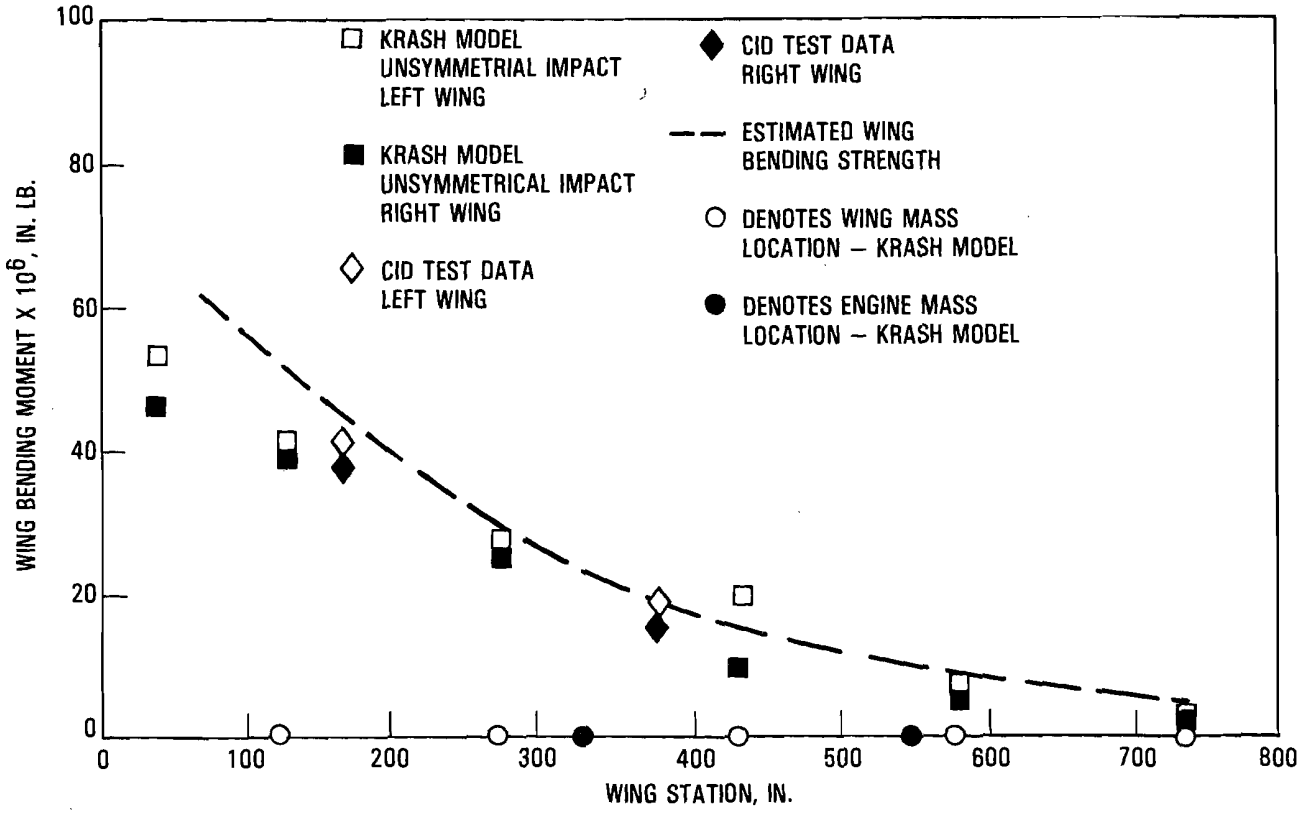

Figure 3-19. Comparison of KRASH Analysis and CID Airplane Test Wing Bending

used to assess impacts that would extend to the limits of airframe structural integrity. Results of post-CID analyses are reported in reference 22. The study, described in reference 23, provides both test and analyses data. The test data shows structure crush characteristics and relates to possible limits of transport airplane airframes due to axial (longitudinal) loading.

The wing dynamic responses can be considered similar to the fuselage pulse since the analyses results are based on air-to-ground and ground-to-ground impacts on the fuselage, and no obstacles such as trees, or poles. For a fuselage impact the wing responds in a low frequency bending mode (1-2 Hz) the duration of the pulse is relatively long. During the CID test a representative vertical acceleration measured on the right wing (left wing impacted ground) shows $\pm$5G peak with a time period of 1.3 cycles/second. Air-to-ground analyses show peak vertical g's between 10.8 and 14.2 along the wing region where fuel could be contained (BL 118-431) for an airplane sink-speed

of 22 ft/sec and with a flat pitch attitude. The individual wing masses (exclusive of the outboard masses) exhibit significant responses which have an average vertical acceleration of 5.0g to 6.8g for durations of 0.120 to 0.162 seconds and velocity changes (ΔV) between 23.8 and 26 ft/sec.

Airframe structural integrity based on parametric studies (reference 22) suggest the crash design velocity envelope depicted in figure 3-20. Crashes within this envelope can be considered surviable since the airframe does not break up. However, to be truly survivable seats, equipment, and fuel systems will have to be designed to be compatible.

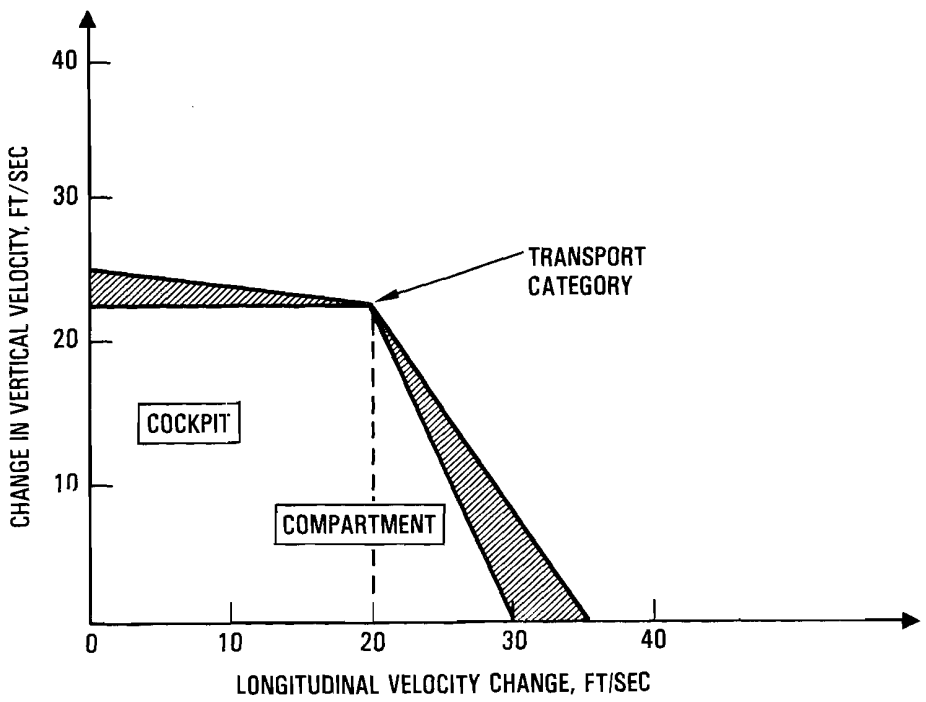

Figure 3-20. Velocity Envelope for Structural Integrity

SECTION 4

DESIGN STUDIES, RECOMMENDATIONS AND CRITERIA

4.1 DESIGN STUDIES

4.1.1 FAA-ADS-19

FAA-ADS-19 (reference 10) describes a study covering the design and construction of aircraft fuel tanks for the purpose of developing design principles for improving fuel containment during survivable, or marginally survivable, crash conditions. This effort was confined to wing integral fuel tanks for multi- piston-engine powered transport airplanes.

The crash environment for design considerations are considered to consist of:

- Local impact trees, poles, large rods for puncturing from rocks, stumps, dislodged parts, etc.
- Distributed impact against earth mounds or during wing low ground contact.
- Internal fuel pressure due to inertial loading.

The effect of these loadings and the recommended design principles are summarized in table 4-1.

The subject report discussed:

- Fuel tank design details
- Fuel containment details
- Containment in fuel lines
- Fuel tank location
- Fuel containment test program

TABLE 4-1. WING LOADING, FAILURE MODES AND DESIGN PRINCIPLES

TYPE OF LOADING	FAILURE MODES	DESIGN PRINCIPLES
CONCENTRATED IMPACT	Local crushing at point impact.	• Increase the chordwise stiffness of the skin panels between the front spar cap and first (or second) stringer. • Provide internal support structure to maintain structural shape (ribs, stringers, intercostals). • Use ductile material for lower surface skin. • Strengthen front spar caps in chordwise direction. • Minimize hard spots.
DISTRIBUTED IMPACT	Local crushing at point of impact, but distributed over a greater span. Primary contact surfaces will be lower front spar and lower wing skin.	• Provide internal support structure to maintain structural shape (rib, stringers, intercostals). • Increase chordwise stiffness of the skin panels between the front spar cap and stringer. • Use ductile material for lower surface skin. • Strengthen front spar caps in chordwise direction.
INTERNAL FUEL PRESSURE	Design pressure will vary with airplane size, wing configuration tank and wing stiffness. Crash deceleration criteria limited by longitudinal loading for passenger compartment. Tank rupture could originate from substructure, attachment or panel bending failures.	• Design internal structure to inertial fuel pressure. • Provide adequate tension fasteners at the front spar rail, web and wing skin joints. • Minimize hard spots.

- Feasibility studies of advanced concepts

  - advanced structures
  - energy absorbing structures
  - minimum fire concepts
  - fuel dump devices and breakaway wings

- Cost/weight associated with fuel containment concepts

Several points that are made in FAA-ADS-19 are:

- Deceleration capabilities vary with airplane size; the trend being a decrease in longitudinal acceleration as gross weight increases. For example, 150,000 lb. transport aircraft may sustain 5g deceleration with wings intact while for lighter transport (50,000 lb.) the comparable deceleration may be 8g.

- Survivable transport crashes usually occur at or near airports in reasonably clear areas. Distributed impact loading and concentrated piercing loads, therefore, are more frequently the cause of fuel spillage than are concentrated impact loads.

- The emphasis for incorporation of fuel containment design principles should be placed on the lower, forward surface of the wing. Concentrated impact resistance will be improved for the rare cases in which trees or poles are encountered.

- Fuel containment depends upon the integrity of the fuel lines as well as of the tank itself. Even though the fuel tanks are not damaged, containment is not realized if fuel lines outside the tank are ruptured or open to allow fuel flow.

- Shutoff valves are required in the tank-to-engine lines so that flow can be stopped in case of an engine fire or failure. However, shutoff valve actuation is not necessarily accomplished in cases of engine detachment or displacement. (Ideal location is valve located inside lower wing surface.)

- In addition to the need for proper shutoff location, a means of automatic operation should be included.

- The fuel lines in the fuselage, between the wing and engines, are subject to damage as the fuselage is collapsed or ruptured at impact or during subsequent ground slide. Rupture of these lines, even without fuel flow, allows fire under the passenger section. Positive shielding for all fuselage damage possibilities is doubtful; however, shielding for the case of lower fuselage collapse is possible.

- From a fuel containment point of view, the optimum fuel tank location on a conventional airplane would be approximately midway between the fuselage and the wing tip. Keeping the fuel tank some distance inboard of the wing tip minimizes the danger of fuel spillage in an accident when the initial ground contact is at a wing tip.

- From a wing tip ground contact analysis it was (in the FAA-ADS-19 study) determined that:

  1. Wing flexibility is the most important factor in determining roll-angle limits.

     a) Wing will not break or spill fuel if it is bent out of the way

     b) Bending of the wing takes time; airplane must descend a distance equivalent to wing tip deflection, and this descent takes time. Ground reaction will roll airplane as a function of time squared while descent rate is a direct function of time.

  2. The amount of outer wing structure that can be crushed and worn away without affecting the fuel tanks, affects roll angle limits.

     a) At lower roll angles, the wing will crush (and bend) until the fuselage contacts the ground and the descent is terminated.

     b) Crushing the wing increases time available to level the airplane.

  3. Wing bending is the predominant factor in determining roll limits. Time available for leveling the aircraft is limited by the amount of structure that can be crushed before a fuel tank is forced into the ground.

     a) Strengthening the outer wing doesn't change available time significantly.

     b) Airplane carrying fuel along the entire span of the structural box will contain fuel at roll angles of 10 to 12 degrees, independent of descent angle.

     c) Airplanes carrying no fuel outboard of the 80% semi-span location will contain fuel at roll attitudes up to 15 or 16 degrees, at any descent path up to 12 degrees.

- The normal mode of failure during either concentrated or distributed impact loading is buckling and fracture of the skin just aft of the front spar cap coupled with pronounced bending and/or fracture of the spar cap.

- Analysis which produces the magnitude of concentrated aft load required to cause chordwise bending or shear failure is generally conservative (high) because:

  1. Wing structure is seldom strong enough locally to sustain the concentrated loads (see figure 4-1) obtained.

  2. Few obstacles present concentrated resistance.

- Pole impacts change aircraft kinetic energy less than 1%.

- Pole breaking tests have indicated that pole strength is reduced considerably as a result of crushing at the point of impact.

- Calculated pole force as a function of aircraft speed, pole diameter and height is presented in figure 4-2.

It should be noted that FAA-ADS-19 was written in 1964 and the data and remarks presented are for piston-engine narrow-body airplanes of 150,000 lb gross weight or less. Current jet powered aircraft can reach in excess of 700,000 lb gross take-off weight. Many of the points made in FAA-ADS-19 are still applicable although some are not appropriate. For example:

- Rare cases of accident events should not be emphasized in the design for fuel containment.

- Current design philosophy for ideal location of shutoff valves is now inside of fuel tank as opposed to inside the lower wing surface.

- Use of automated shutoff valves is of concern since inadvertent shutoffs could have catastrophic effects.

4.1.2 FAA-ADS-27

FAA-ADS-27 (reference 24) describes a study in which a crash-resistant fuel system utilizing high-strength bladder fuel cells, breakaway fittings, crash-load- actuated shutoff valves, and fiberglass protective liners was designed and installed in the center section of a DC-7 airplane wing. The wing was mounted on a wheeled dolly and the No. 2 and No. 3 main fuel tanks were filled with water. The No. 2 tank was standard DC-7 configuration; the No. 3 tank was equipped with Crash Resistant Fuel System (CRFS) components. A jet-propelled car was used to accelerate the wing and dolly to predetermined velocities

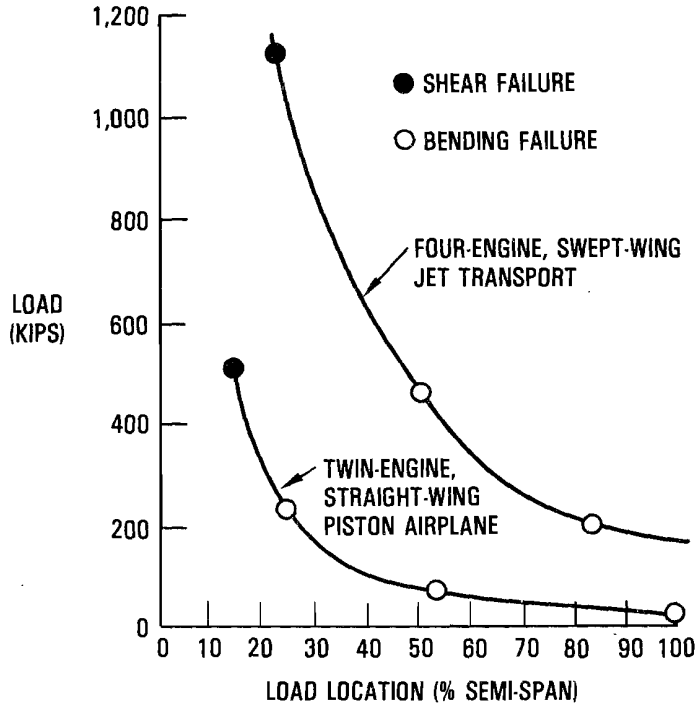

Figure 4-1. Examples of Local Concentrated Loads Required to Fail Wings in Chordwise Shear or Bending

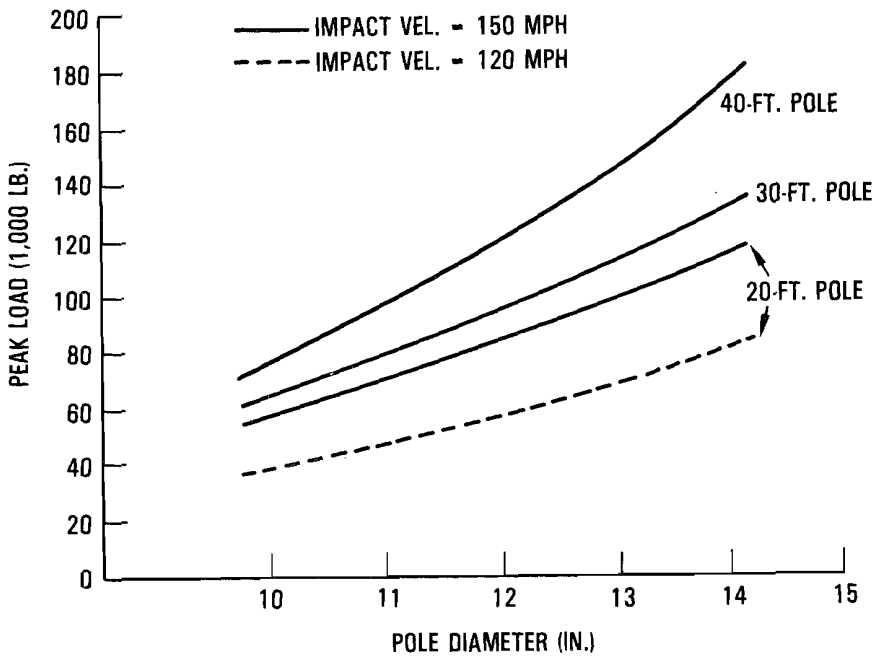

Figure 4-2. Peak Loads Required to Cut Through Trees or Poles 10 Ft. Above Ground Level

prior to engaging a decelerator. The decelerator, especially designed for this project, imposed controlled decelerations on the wing ranging from 2 g's to 21 g's (28-g fuel equivalent). There were no failures in either standard or crash-resistant fuel (CRF) system fuel cells and no inadvertent valve closures in the CRF system during the tests. Hydraulic loads were nominal and were not additive from one cell to another through interconnections. A final destructive test was conducted wherein the wing, at a velocity of 77 knots, engaged two stationary vertical poles, positioned to shear the wing panels at the outboard nacelles. It was demonstrated that the CRF system has a potential for greater chances of fuel containment, with consequent less fire hazard, provided a more positive means of triggering shutoff valves is utilized. The CRF system, as installed in a DC-7, imposes a penalty of 6.97 percent fuel volume loss for a range loss of 6.97 percent. Accepting this volume and range loss, the weight will decrease about 1200 lbs. However, since there is a loss of 384 gallons of fuel (6.9 lbs/gallon) there is actually a weight penalty to achieve the same range and payload.

These tests were made using a DC-7 structure because of its availability and because it was representative of modern transport structures at that time. No analysis was made concerning the practical or economic aspects of utilizing bladder type fuel cells in commercial aircraft.

The report suggests the following design and installation criteria:

1. In addition to the present requirement of MIL-T-27422 (Military Specification - Tank, Fuel, Crash-Resistant Aircraft) and MIL-V-27393 (Military Specification - Valve, Safety, Fuel Cell Fitting, Crash-Resistant, General Specification for) greater emphasis should be placed upon the following listed items:

    a. Fuel cell liner material - must be flexible, tough, impact resistant. If broken or creased, edges should be dull (not sharp as with broken metal pieces).

    b. Fuel cell liner - should cover all surfaces, leaving no exposed metallic portions of the cavity. Should be joined structurally into self-supporting cavity with minimum fastening to primary aircraft structure. Any fastening required should be of frangible nature.

c. Valve actuation - additional means of valve triggering independent of cell movement should be provided. This system would be in addition to present triggering methods (cell movement) and be capable of triggering valves some distance from an impacted area. The system sensing should be deformation rather than g loading.

d. Valve interconnecting bellows - should be molded elastomer instead of teflon.

e. Incorporate high strength bands around fuel cells which will provide load paths to and/or between valve adapter frangible attachments.

f. Frangible fittings - decrease fitting pull-off force to allow triggering of CRF valves under lower initial loading and decrease the load passing through the fuel cells to fail fittings.

g. Generally speaking, in new design and construction, attention should be given to locating fuel cells in other than areas vulnerable to structural penetration and ignition sources. SST aircraft will probably require fuselage tanks. Such tanks should be protected by structure, preferably of non-sparking material.

4.1.3 FAA-ASF-80-4

FAA-ASF-80-4 (reference 7) provides a summary of the Special Aviation Fire and Explosion Reduction (SAFER) Advisory Committee Report. Several methods for reducing the fire hazard in a post-crash environment were reviewed to determine their feasibility and potential for improving passenger survivability. These methods included explosion suppression systems, fuel tank foam or foil, fuel tank inerting, crash-resistant fuel tanks, and anti-misting fuels. The report stated in 1980, "that none of these methods, at their present state of development, are feasible for commercial aircraft application or offer significant advantages over present methods of protection such as vent flame arrestors and assured cutoff of the fuel supply to the engine in emergencies." The SAFER committee summary report further states:

"• Further development of fuel tank inerting methods is encouraged to reduce complexity and weight and improve reliability of the system.

• Anticipated FAA/NASA programs to investigate factors to be considered to improve the crashworthiness of aircraft is expected to include the

use of crash-resistant fuel tanks. At the present time they appear to be feasible in fuselage cargo compartments only.

- Antimisting fuels appear to hold the most promise for increasing passenger survivability by reducing the fuel fire hazard in the post-crash environment. However, much development testing is required before its feasibility can be established.

- The state of development of the above systems is not sufficient at this time to warrant modifying regulations which require their incorporation. However, it is suggested that the FAA consider modifications to the regulations requiring the inclusion of fuel tank vent protection from ground ignition sources and assurance of engine fuel supply cutoff in emergency situations."

A summary of two SAFER subcommittee reports is presented in Appendix B.

As a result of this study, the SAFER group arrived at the following conclusions:

- It is feasible to install crash-resistant fuel cells in fuselage cargo compartments.

- It is not feasible to install crash-resistant fuel cells in the wings of conventional transport aircraft.

- Existing Federal Aviation Regulations are adequate.

- Further definition of criteria should evolve from total aircraft crashworthiness considerations.

4.2 DESIGN CRITERIA AND RECOMMENDATIONS

4.2.1 The U.S. Army Crash Survival Design Guide

The U.S. Army Crash Survival Design Guide (reference 27) is a five-volume document which was most recently revised in 1980. The five volumes consist of:

Volume I - Design Criteria Checklists

Volume II - Aircraft Crash Environment and Human Tolerance

Volume III - Aircraft Structural Crashworthiness

Volume IV - Aircraft Seats, Restraints, Litters and Padding

Volume V - Aircraft Postcrash Survival

Volume I (Aircraft Crash Environment) and Volume V (Aircraft Postcrash Survival) are most pertinent for the subject study. In Volume I a summary of impact design conditions are presented. Figure 4-3 illustrates the combined longitudinal, lateral and vertical velocity, changes for helicopters to be used in determining intermediate velocity change components. For light fixed-wing aircraft and attack and cargo helicopters, figure 4-3 will still be correct, but (c) and (d) must be altered for a lateral velocity change of 25 ft/sec instead of 30 ft/sec. The velocity change, V in feet per second, for a triangular pulse shape that is recommended for design purposes for rotary and light fixed-wing aircraft, is shown in table 4-2. Volume I also presents a chapter entitled, "Aircraft Postcrash Survival." However, since this is the subject of Volume V, a more comprehensive treatment of this subject can be obtained from the material in the latter volume.

The post-crash fire environment is discussed in Chapter 3 of Volume V. Included in this section are discussions on such topics as heat, smoke and toxic gases, human tolerance to heat, toxic gases and miscellaneous fire factors. While important subjects, this section is not as pertinent to fuel containment as the material in Chapter 4, "Post-Crash Fire Protection." Chapter 4 provides design suggestions for crashworthy systems oriented toward a reduction of fuel spillage and ignition sources and greater emphasis on "built-in" post-crash fire protection during the aircraft design stage as a means of improving post-crash fire survival.

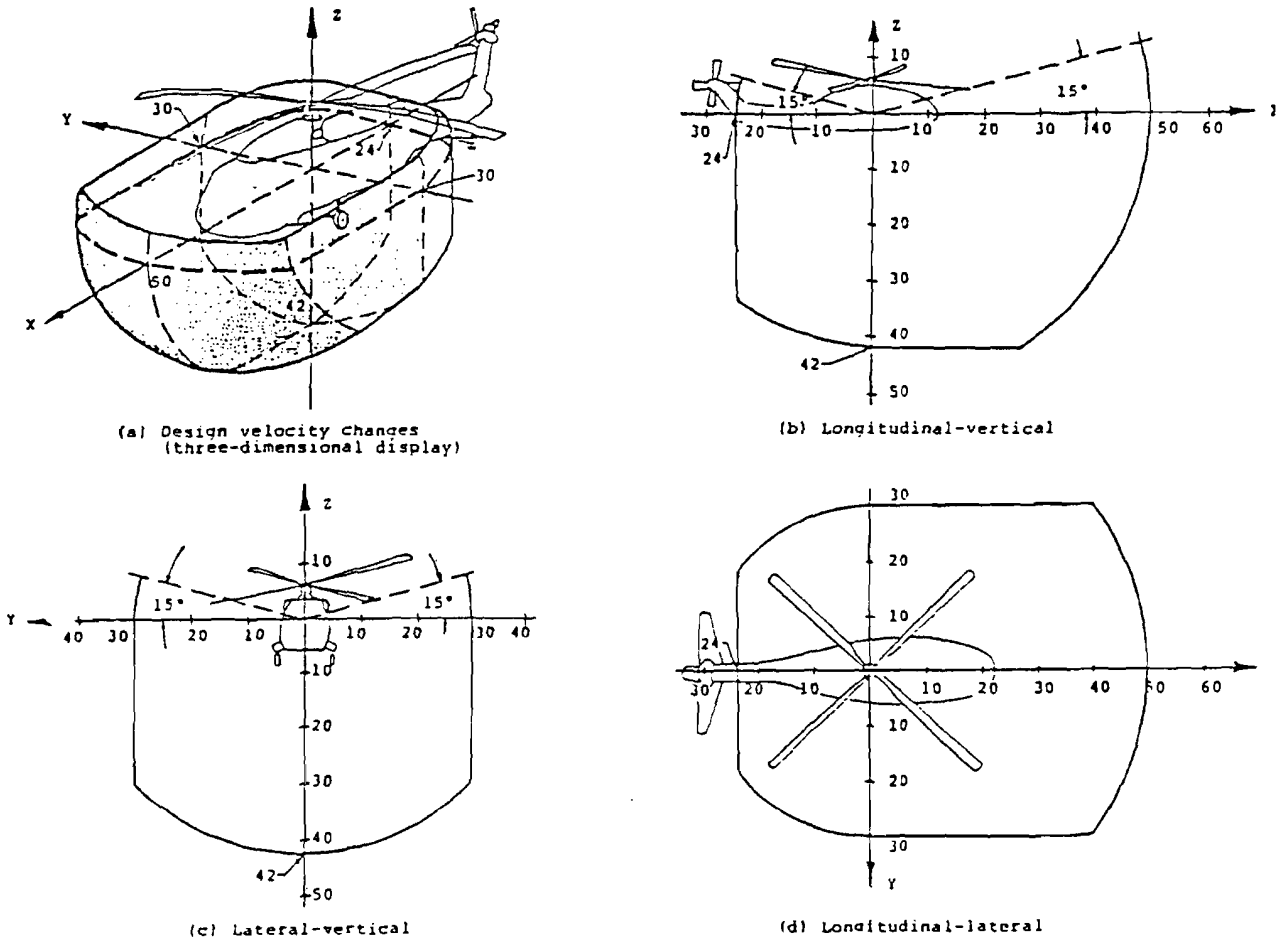

NOTE – UNITS ARE IN VELOCITY CHANGE OF FT/SEC

Figure 4-3. Design Velocity Changes, Off-Axis Requirements

TABLE 4-2. SUMMARY OF DESIGN CONDITIONS FOR ROTARY-WING AND LIGHT FIXED-WING AIRCRAFT

Impact Direction	Velocity Change (Ft/Sec)
Longitudinal	50
Vertical	42
Lateral*	25
Lateral**	30

* Light fixed-wing, attack, and cargo helicopters.
** Other helicopters.

The recommended design features contained in Volume V, Section 4, are summarized in table 4-3. The features relate to fuel tanks, fuel lines and supportive components.

4.2.2 Military Specifications

The military crash design requirements are different depending upon the particular branch of the defense agency. Military specifications include:

MIL-STD-1290	Light Fixed and Rotary Wing Aircraft Crashworthiness (reference 46)
MIL-T-27422B	Aircraft Crash-Resistant Fuel Tank (reference 47,) Applicable to all Department of Defense departments and agencies
MIL-A-8865A	Airplane Strength and Rigidity Miscellaneous Loads (reference 48)
AR-56	Structural Design Requirement (reference 49)

TABLE 4-3. CRASH SURVIVAL DESIGN GUIDE RECOMMENDED FUEL CONTAINMENT DESIGN FEATURES

FUEL CONTAINMENT	
	RECOMMENDED FEATURES
• Fuel Tanks Location	Increase distance between occupants and fuel supply and ignition source. Avoid rupture due to landing gear penetration. Locate away from ground contact in crash sequence and thus reduce exposure to rocks, stumps and other irregularities. Locate wing tanks as far outboard as possible but not at tip. Avoid locating in areas where considerable structure collapse can occur and tanks are subject to pressures that exceed design limits or exposed to torn and jagged metal. Avoid sharp cutting corners, penetrating spars and longerons.
Shape	Cylindrical or rectangular shape is best. Avoid proturbances and interconnecting cells, most vulnerable to rupture. If tanks deviate greatly from regular cylindrical or parallel and piped shapes, consideration should be given to use of separate tanks or interconnecting self-sealing fittings. To minimize snagging and excessive concentration of stresses, inside angles should be avoided. All outside angles should have a radius $\geq$ 1 inch. Tanks should be oriented so that the side with the greatest surface area is facing the direction of probable impact.

TABLE 4-3. CRASH SURVIVAL DESIGN GUIDE RECOMMENDED FUEL CONTAINMENT DESIGN FEATURES (CONT'D)

FUEL CONTAINMENT	
	RECOMMENDED FEATURES
Materials	Must possess high degree of cut and tear resistance and have moderate elongation - MIL-T-27422B requirements. Design tank fitting to pull free of airframe structure rather than out of tank. Exhibit crash impact resistance per MIL-T-27422B (65 ft height drop test).
Fittings	Use high strength insert-retention methods (80% of fuel cell wall strength)
Attachments	Secure fuel tank to airframe and connecting plumbing in a way that allows tank to pull free of the attachments without rupturing when structural displacement occurs in a crash. Use frangible brackets or bolts to ensure separation at specified loads. Either fail material or some facet of the design must meet operational and service loads with margin (approx. factor of 10), but fail at 25% to 50% of minimum load required to fail the attached system or component. Frangible attachments should be designed to separate efficiently in the direction of force most likely to occur during a crash impact.
• Fuel Lines	
Line Construction	Avoid cutting of lines by surrounding structure or being worn through by rubbing against rough surfaces. Use flexible hose armored with a steel braided harness in vulnerable areas.

TABLE 4-3. CRASH SURVIVAL DESIGN GUIDE RECOMMENDED FUEL CONTAINMENT DESIGN FEATURES (CONT'D)

FUEL CONTAINMENT	
	RECOMMENDED FEATURES
	If breakaway valves are not provided, hoses 20% to 30% longer than minimum are to be used. Fittings are to meet strength requirements shown when tested in modes shown. All fuel lines should be secured with breakaway (frangible) attachment clips for areas of anticipated structural dedormation. When fuel lines pass through areas where extensive displacement or complete separation is anticipated, self-sealing breakaway valves should be used. Breakaway valves must meet all opeational and service loads with satisfactory margin and separate between 25% and 50% minimum failure load. Systems with line-to-line breakaway valves should consider potential hazards to cross-axis shear loading on the valve halves. If possible, use omnidirectional valves.
Line Routing	Route along heavier structural members. Provide space into which hose can deform. If design requirements limit the use of protective measures, full use should be made of self-sealing breakaway couplings located in areas of anticipated failures. Space and flexibility should be provided at the cross-over connection, drains and outlet lines if they are vulnerable to impact damage. Consideration should be given to using self-sealing breakaway fittings at each line-to-tank attachment point.

TABLE 4-3. CRASH SURVIVAL DESIGN GUIDE RECOMMENDED FUEL CONTAINMENT DESIGN FEATURES (CONT'D)

FUEL CONTAINMENT	
	RECOMMENDED FEATURES
• Supportive Components Self-Sealing Breakaway Valves	Design to separate into two or more sections and seal the open ends of designated fluid-carrying passages. Openings may be in fuel/oil lines, tanks, pumps, fittings; Use of "one-shot" or quick disconnect types. Desired locations: • Fuel-carrying tank outlet • Fuel line network where extensive displacement is forecast, i.e., wing root, engine compartment • Connection between two fuel cells in direct side-by-side arrangement. Recess tank to line interconnect valves sufficiently into the tank, so that the tank half is flush with tank wall or protrudes only a minimal distance beyond the tank wall after separation. Frangible interconnecting member of valves should meet all operational and service loads with reasonable margin but separate at 25% to 50% of the minimum failure load.
Vents	Avoid drain-out of the fluid when aircraft rolls to one side. Avoid vent line failure at point of exit from the tank. Use short high-strength fittings between metal insert in the tank and vent line.

TABLE 4-3. CRASH SURVIVAL DESIGN GUIDE RECOMMENDED FUEL CONTAINMENT DESIGN FEATURES (CONT'D)

FUEL CONTAINMENT	
	RECOMMENDED FEATURES
	Vent line should be of wire-covered flex hose routed to avoid snags. Use siphon breaks and/or U-shaped traps in vent line routing onside the fuel tank. If vent lines are placed inside the fuel tank, they should be designed to operate in any attitude and allow a free flow of air while prohibiting a flow of fuel. They can be used in lieu of alternate considerations such as flexible lines or breakaway valves. Fuel systems that are pressure refueled should use a bypass system for tank over-pressurization. Insure that spillage resulting from overpressurization due to tank compression during a crash is released away from aircraft occupants and ignition sources.
Boost Pumps	Fall into two categories: 1. Tank- or line-mounted types which pressurize the fuel lines. 2. Line or engine mounted type which suck fuel from the tanks and lines, creating a slight negative pressure in the fuel lines. The latter poses a lower threat for crash fires. If boost pumps are installed in the fuel tank, air-driven as opposed to electrically driven, is desirable. Attach pump rigidly bolted to fuel cell only. If supported or attached to the aircraft structure, a frangible attachment should be used.

TABLE 4-3. CRASH SURVIVAL DESIGN GUIDE RECOMMENDED FUEL CONTAINMENT DESIGN FEATURES (CONT'D)

FUEL CONTAINMENT	
	RECOMMENDED FEATURES
Filler Necks	Design filler cap to remain with the tank by mounting it at or slightly below the tank wall surface. Recommend against filler necks unless frangible type is used.
Quantity Sensors	Avoid rigid attachment between the sensor entry into the tank and the aircraft structure (make probe mounting attachment frangible or use frangible structure for this type of attachment). Avoid puncturing the tank by the long, rigid, tubular sensing probes. (Possibly mount the probe at a less hazardous angle or use curved, frangible, low-flexural-rigidity probes or probes equipped with load spreading shoes, fuel counters and float-and-arm tube sensors.)
Sump Drains	Design for maximum drainage without the drain protruding beyond the face of the tank.
Fuel Strainers and Filters	Do not locate in-line fuel drainers in the engine compartment. Do not mount directly on engine (engine affords some protection but proximity to the hot engine surfaces creates an additional hazard from ballistic hits). Design for 30G in any direction. Use self-sealing breakaway couplings to attach fuel lines to the fuel strainers.

MIL-STD-1290 is essentially a condensed version of the U.S. Army Crash Survival Design Guide in military standard format. The crashworthy design techniques and analytical approaches discussed in the Design Guide were omitted and only the required results were retained.

MIL-A-8865A is a U.S. Air Force document which provides a crash loads section in which load factors are specified for the longitudinal, vertical and lateral directions. The requirements are applicable to installation of: seats (crew, passenger, troop and litter), capsules, internal fuel tanks, mechanisms for holding canopies, door and other exits open for egress, equipment items, cargo, engines, and aerial delivery equipment.

AR-56 is a U.S. Navy document which specifies crash loads and loading conditions which are applicable to the design of crew seats, passenger seats, troop seats, litters, capsules, mechanisms for holding canopies and doors in their open positions, attachments of equipment items, cargo, engines, fuel tanks, turrets, and aerial delivery equipment and their carry-through structures. The specification provides for ultimate inertia load factors and maximum impulse requirements.

MIL-T-27422B specifies the test requirements for crash-resistant fuel tanks used in fixed-wing and rotary-wing aircraft for all departments and agencies of the Department of Defense. Composite construction tests include: constant rate tear, impact penetration, impact tear, panel strength, sitting strength. Cell tests include: Fuel resistance of exterior surface, crash impact, slosh resistance, gunfire resistance, aging and standing. Permability tests, as well as inner layer ply strength tests are also described.

The fuel tank crash loads requirements for military aircraft are summarized in table 4-4. The applicable FAR 25 regulations crash load factors are also shown in table 4-4 for comparison.

TABLE 4-4. FUEL TANKS CRASH LOADS REQUIREMENTS

	SPECIFICATION (1)				
	AR-56 (5)		MIL-8865A (6)	MIL-STD-1290 (4)	FAR 25
	(2)	(3)	(2)	(2)	(2)
Forward	20.0	45.0 (0.10)	9.0	20.0	9.0
Aft	-	-	1.5	20.0	-
Up	20.0	-	2.0	10.0	2.0
Down	20.0	25.0 (0.20)	4.5	20.0	4.5
Left	10.0	25.0 (0.20)	1.5	10.0	1.5
Right	10.0	25.0 (0.20)	1.5	10.0	1.5

(1) Loads in "g's"

(2) Static, unidirectional loads

(3) Dynamic; time duration, seconds, in parenthesis. Specifies maximum impulse requirement.

(4) Applied separately

(5) Fuel tanks 1/2 full

(6) Fuel tanks 2/3 full

4.2.3 Coverage by Existing Regulations and Advisory Circulars

The coverage by existing Regulations and Advisory Circulars, pertaining to fuel tanks/cells and systems and excerpted from references 50 to 53 are contained in Appendix C.

SECTION 5

EVALUATION OF FUEL CONTAINMENT STRUCTURAL DESIGN CONCEPTS

5.1 WING FUEL TANKS

Several fuel containment design concepts are presented in FAA Report ADS-19 "Structural Design of Fuel Containment Under Survivable Crash Conditions" (reference 10). These concepts fall into the following categories:

1. Conventional fuel tank and rib design features (figure 5-1)
2. Front spar design configurations (figure 5-2)
3. Forward skin panel designs - impact resistance (figure 5-3)
4. Front spar protection concepts (figure 5-4)
5. Leading edge protection concepts - pole, tree impact (figure 5-5)
6. Energy absorbing structures concepts (figure 5-6)

The concepts and the associated comments from reference 10 are shown in figures 5-1 through 5-6, respectively. The following comments are based on the current study evaluation in light of the accident, test and analyses results:

- Figure 5-1 - Conventional fuel tank and rib design features

  Typical current design does not require locally thickened skin for inertia or crash loads (a), (b). The skin is moderately thick over the entire chord for design loads and lightning protection. The rib construction shown in (c) is consistent with current technology aircraft.

- Figure 5-2 - Front spar design

  Concept (a) requires that the front spar resist the puncture loads because the thick membrane will not perform that function.

- Concept (b) is considered impractical because it is difficult to see how a sufficiently different beam can be designed to accommodate normal wing bending loads.

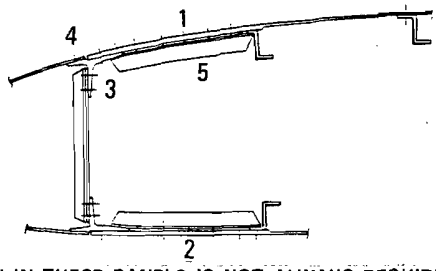

1-2 THE THICKER SKIN SHOWN IN THESE PANELS IS NOT ALWAYS REQUIRED. THE BASIC SKINS ON THE INBOARD WING SECTIONS OF LARGE AIRPLANES MAY BE ADEQUATE FOR ANTICIPATED IMPACT LOADS. A DUCTILE, TEAR-RESISTANT MATERIAL SHOULD BE USED ON THE LOWER SURFACE

3 ATTACHMENTS THROUGH SPAR CAPS, ESPECIALLY OUTER ROWS (FURTHEST FROM CAP RADIUS), SHOULD HAVE GOOD TENSION ALLOWABLES AND ADEQUATE BEARING AREA TO REDUCE STRESS CONCENTRATIONS

4 CAP MATERIAL IS USUALLY DICTATED BY PRIMARY FLIGHT LOADS. ADDITIONAL CAP MATERIAL MAY BE REQUIRED IN THOSE DESIGNS HAVING INADEQUATE LOCAL BENDING STRENGTH TO DISTRIBUTE CONCENTRATED IMPACT LOADS

5 STIFFENER SPACING SHOULD BE OPTIMIZED FOR CONCENTRATED IMPACT LOADING

(a) FUEL TANK DESIGN

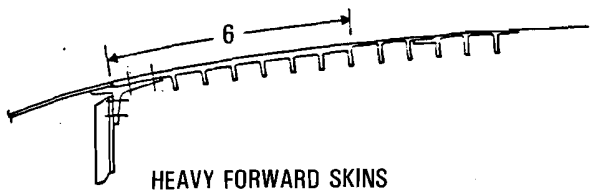

6 THIS DIMENSION AND THE CORRESPONDING DIMENSION SHOWN IN (a) ABOVE IS A FUNCTION OF THE LOCAL BENDING AND CRUSHING STRENGTH REQUIRED TO DISTRIBUTE IMPACT LOADS

(b) FUEL TANK DESIGN

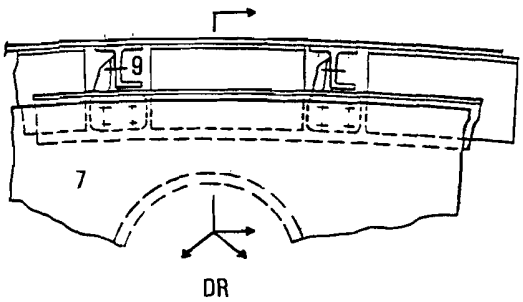

7 ANALYTICAL WORK AND TEST RESULTS HAVE SHOWN THAT WEB-TYPE RIBS HAVE GREATER CRASH RESISTANCE THAN TRUSS-TYPE RIBS

8 TESTS AND ENGINEERING ANALYSIS HAVE INDICATED THAT FULL INTERCOSTALING (FRONT SPAR TO REAR SPAR) IS DESIRABLE. INTERCOSTALS SHOULD BE DESIGNED FOR TENSION LOADS AS WELL AS SHEAR

9 ALL ATTACHMENT PATTERNS SHOULD BE CRITICALLY ANALYZED FOR CRASH CONDITIONS

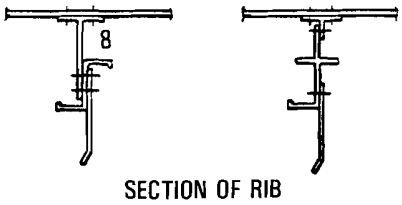

(c) RIB DESIGN

Figure 5-1. Conventional Fuel Tank and Rib Design Features

(a)

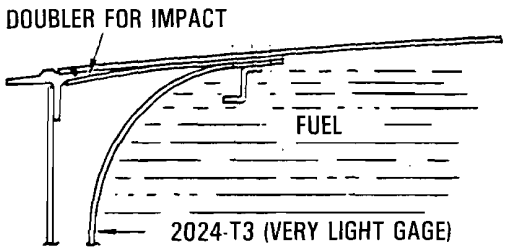

ADVANTAGES:

1. HIGH FUEL INERTIAL PRESSURES CAN BE CONTAINED IN A LIGHT GAGE WING STRUCTURE
2. THE FRONT SPAR CAN BE BROKEN OR PUNCTURED WITHOUT NECESSARILY SPILLING FUEL

DISADVANTAGES:

1. LOST VOLUME FOR FUEL IS APPROXIMATELY 2%
2. FUEL SEALING AT THE RIBS IS DIFFICULT
3. MANUFACTURING AND INSPECTION ARE COMPLICATED

(b)

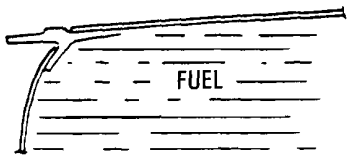

ADVANTAGES:

1. HIGH FUEL INERTIAL PRESSURES CAN BE CONTAINED IN A WING WITH LIGHT GAGE SKINS AND SPAR WEBS
2. THE HEAVY SPAR CAP FURNISHES GOOD IMPACT STRENGTH

DISADVANTAGES:

1. MATING AND RIVETING IS DIFFICULT
2. RIB DESIGN AND WEB STIFFENING IS COMPLICATED
3. FRONT SPAR CAP IS HEAVY ALTHOUGH USABLE AS WING BEAM MATERIAL

NOTE: THESE CONCEPTS ARE PRIMARILY FOR THOSE APPLICATIONS WHERE THE CRITICAL LOADING RESULTS FROM INERTIAL FUEL PRESSURE

Figure 5-2. Front Spar Design Configurations

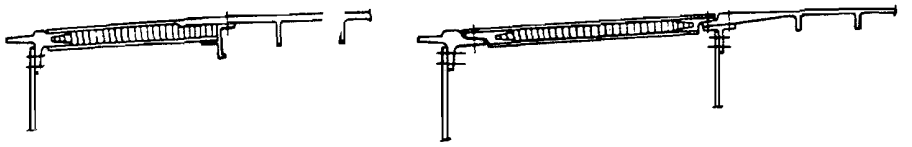

ADVANTAGES:

1. GOOD IMPACT RESISTANCE
2. PANELS INCREASE BENDING STRENGTH OF WING BOX, THEREFORE, OVER-ALL WEIGHT INCREASE WILL BE SMALL

DISADVANTAGES:

1. CURING PROBLEMS ADD TO MANUFACTURING COSTS
2. MANUFACTURING AND MAINTENANCE COSTS ARE INCREASED

ADVANTAGES:

1. SAME AS AT LEFT
2. SAME AS AT LEFT
3. PANELS CAN BE REMOVED

DISADVANTAGES:

1. MANUFACTURING COSTS HIGHER THAN MACHINED SKINS.

NOTE: THESE DESIGNS HAVE THE COMMON ADVANTAGE OF GOOD IMPACT RESISTANCE

(a) SANDWICH CONSTRUCTION IN FORWARD SKIN PANELS

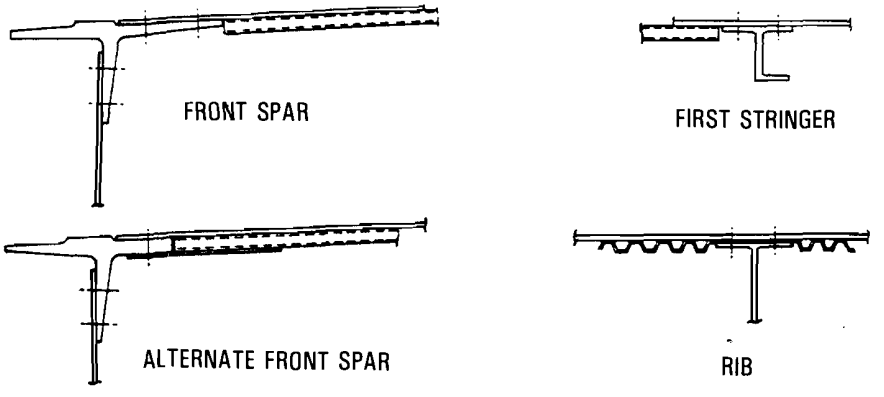

(b) CORRUGATED SKIN CONFIGURATION

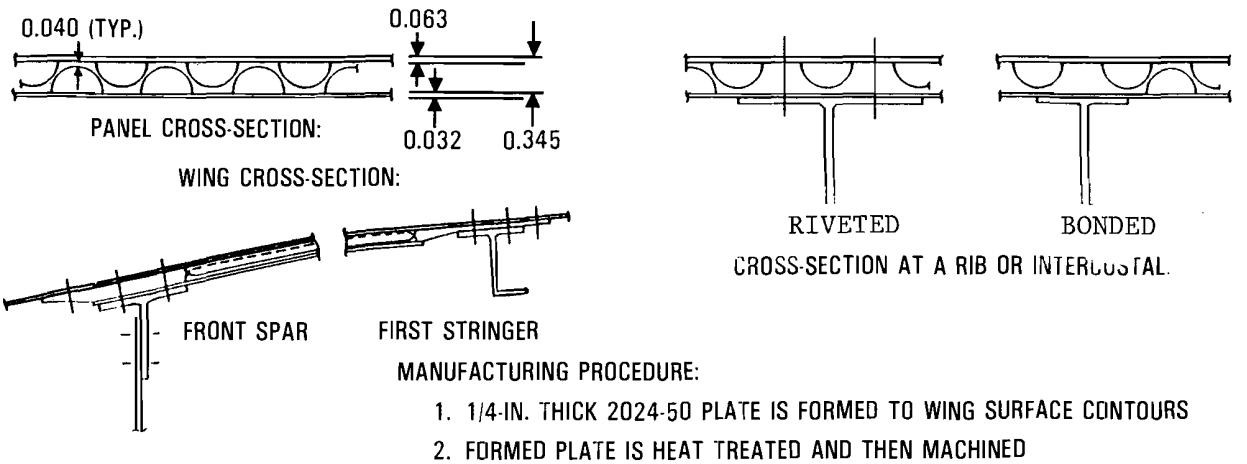

MANUFACTURING PROCEDURE:

1. 1/4-IN. THICK 2024-50 PLATE IS FORMED TO WING SURFACE CONTOURS
2. FORMED PLATE IS HEAT TREATED AND THEN MACHINED
3. 0.063 OUTER AND 0.032 INNER HEAT TREATED SKINS ARE BONDED TO CORE

(c) SANDWICH

Figure 5-3. Forward Skin Panel Designs - Impact Resistance

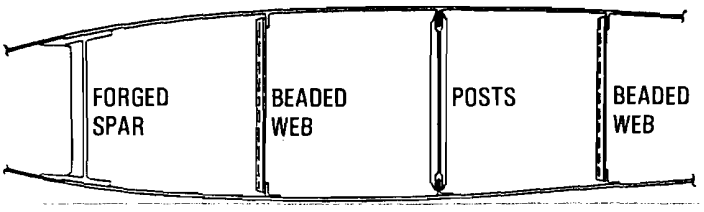

ADVANTAGES:

1. MULTI-WEB DESIGN IS INHERENTLY GOOD FOR HITTING POSTS OR TREES AND FOR SLIDING OVER ROCKS OR HARD GROUND SINCE THE SKINS ARE THICKER THAN ON OTHER TYPES OF CONSTRUCTION
2. THE BEADED WEB JUST AFT OF THE FRONT SPAR GIVES A COMPARTMENTATION EFFECT BY HINDERING FUEL MOVEMENT. NOTE THAT THIS POSSIBLE ADVANTAGE MAY NOT HOLD FOR HIGHLY SWEPT WINGS

DISADVANTAGES:

1. THE SHEAR STRENGTH BETWEEN THE UPPER AND LOWER SKINS IS LIMITED BECAUSE OF THE VERY LARGE RIB SPACING USUALLY FOUND IN MULTI-WEB CONFIGURATIONS. A LARGE LOAD ON THE LOWER SURFACE (SUCH AS THAT ENCOUNTERED WHILE PLOWING THROUGH SOFT EARTH OR POSSIBLY WHILE DITCHING) WILL TEND TO COLLAPSE THE LOWER SKIN AFT WITH RESPECT TO THE UPPER SURFACE
2. DESIGN ALLOWS LESS DEVIATION FROM ORIGINAL LAYOUT SINCE CUTOUTS AND LOCAL LOAD CONCENTRATIONS CANNOT BE ACCOMMODATED EFFICIENTLY

(a) MULTI-WEB POST CONFIGURATION

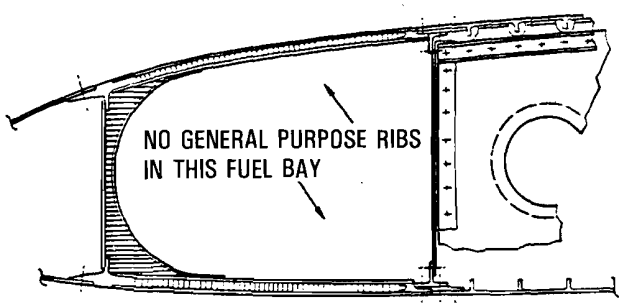

ADVANTAGES:

1. GOOD DESIGN FOR MOST CRASH-TYPE LOADINGS
2. THE ADDED WEIGHT IS STRUCTURAL. THE EFFECT ON OVER-ALL WING WEIGHT IS THEREFORE LESSENED

DISADVANTAGES:

1. DESIGN AND FABRICATION IS COMPLEX
2. MANUFACTURING AND MAINTENANCE INSPECTION IS DIFFICULT

(b) BOLT-ON BONDED FORWARD BAY

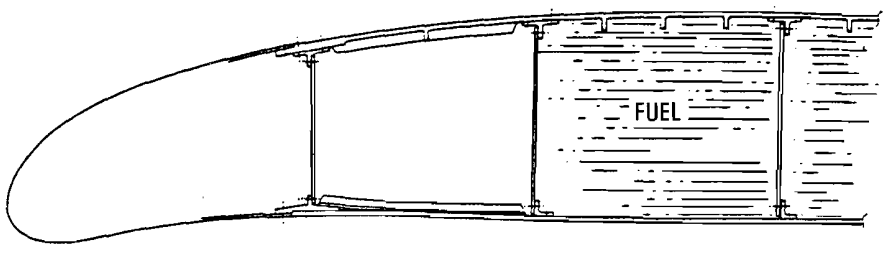

ADVANTAGES:

1. IMPACT IN THE FRONT SPAR REGION IS LESS CRITICAL
2. THE ADDED MATERIAL IS STRUCTURAL

DISADVANTAGES:

1. EXTRA MACHINING AND INHERENT WASTE MATERIAL ADD TO THE COST OF THE CONFIGURATION SHOWN.

(c) FUEL CONTAINMENT FOR DELTA WINGS WHEN FUEL SPACE IS NOT CRITICAL

Figure 5-4. Front Spar Protection Concepts

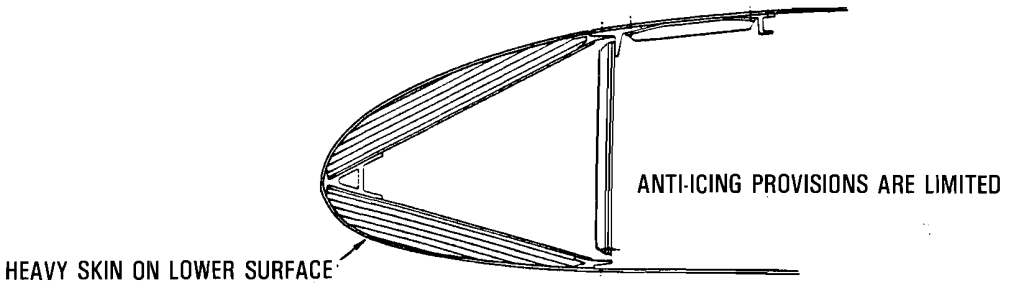

NOTE: 1. ANY WEIGHT ADDED TO THE LEADING EDGE IS DEAD WEIGHT. LEADING EDGES SELDOM ADD TO THE STRENGTH OF THE WING BOX. EVEN A STRUCTURAL LEADING EDGE CAN ADD LITTLE TO THE BENDING STRENGTH OF THE WING BOX

2. IF LEADING EDGE LIFT DEVICES ARE USED, THE PROBLEM BECOMES ONE OF PROTECTING THE FRONT SPAR FROM PUNCTURE BY LEADING EDGE ELEMENTS RATHER THAN OF THE LEADING EDGE PROTECTING THE WING FUEL TANKS (a)

3. ANY LEADING-EDGE PROTECTION DEVICE WHICH ABSORBS IMPACT LOADS MUST BE BACKED UP BY SUBSTANTIAL MAIN BOX STRUCTURE TO DISTRIBUTE THE LOADS

4. ANTI-ICING PROVISIONS ARE LIMITED IF THE LEADING EDGE PROTECTION DEVICES ARE INCORPORATED IN AN ALREADY CROWDED AREA

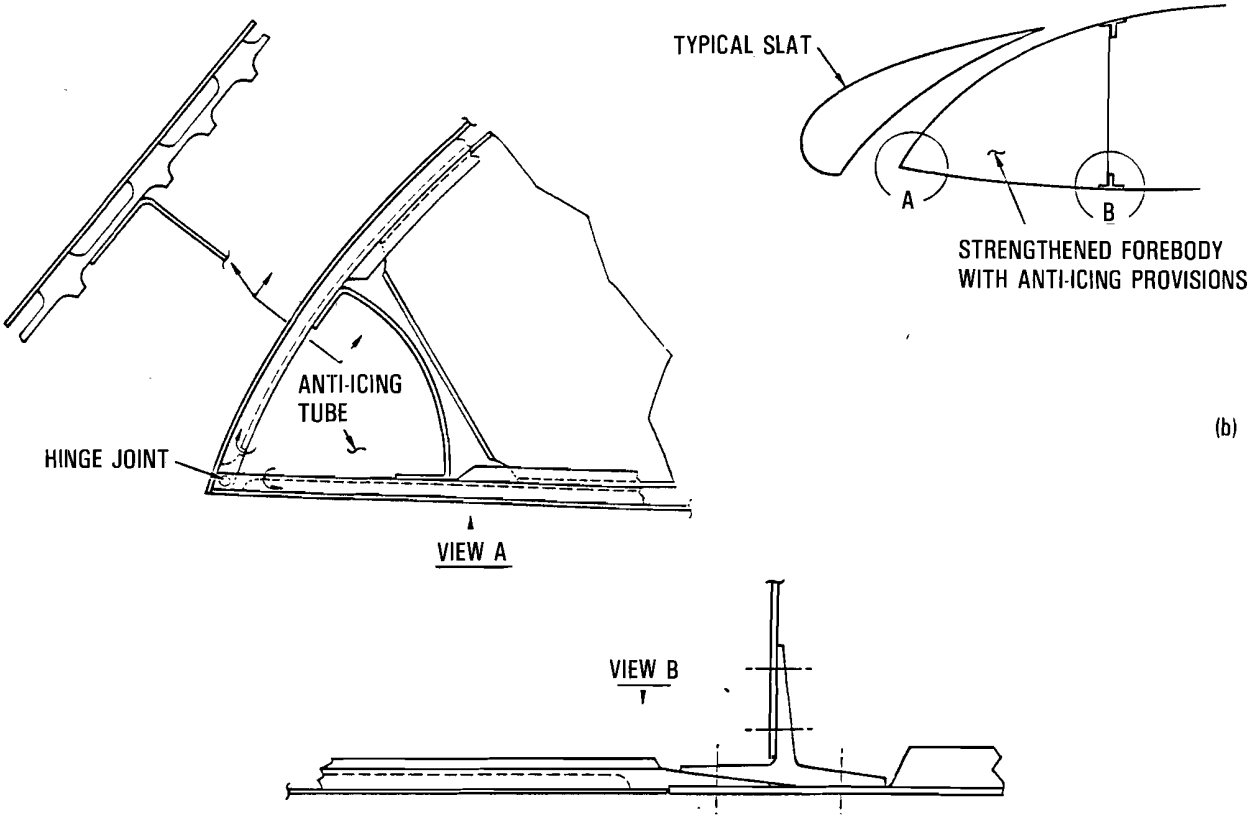

(b)

NOTE: IN THIS ARRANGEMENT, THAT PART OF THE LEADING EDGE AFT OF THE SLAT IS STRENGTHENED FOR IMPACT LOADING. PROVISIONS FOR ANTI-ICING ARE INCLUDED

Figure 5-5. Leading Edge Protection Concepts - Pole Tree Impact

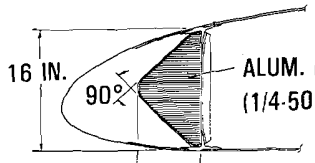

WORK $\simeq 8\left(\frac{24{,}000}{2}\right)$ = 96,000 FT.-LB. PER FOOT SPAN

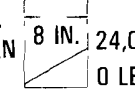

24,000 LB. PER INCH SPAN

0 LB. PER INCH SPAN

Wt $\simeq 7.9\ (1.1)\left(\frac{64}{144}\right)$ = 3.86 LB. PER FOOT SPAN

NOTES: 1. RIBS AND/OR SKIN MUST BE STRENGTHENED TO DISTRIBUTE HIGH LOCAL LOADS
2. SPAR MUST BE INSPECTED FROM INSIDE
3. ANTI-ICING AND HIGH-LIFT DEVICES ARE SPACE LIMITED
4. THERE MUST BE LOCAL INTERRUPTIONS OF CORE FOR ACTUATORS, TRACKS, PLUMBING, ETC

(a) ENERGY-ABSORBING STRUCTURES

ASSUMING 4 LB./CU.FT. CORE AND 16 IN. x 10 IN. BAY SIZE

Wt = $4\left(\frac{16 \times 10}{144}\right)$ = 4.44 LB. PER FT. OF SPAN

FUEL LOSS = $\left(\frac{4\ (100)}{0.1\ (1728)}\right)$ = 2.32% OF BAY WITH CORE (0.1-0.2% OF TOTAL FUEL)

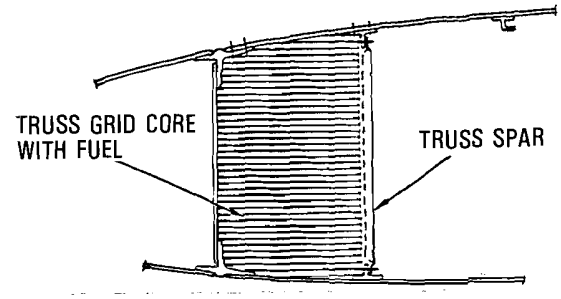

NOTES: 1. TANK PURGING IS DIFFICULT
2. BACTERIAL GROWTH PROBLEM IS COMPOUNDED UNLESS CORE IS FIBERGLASS
3. FUEL MAY STILL POUR OUT AFTER A CRASH BUT FIRE CAN ONLY BURN AS FAST AS FUEL IS SUPPLIED
4. BOND TO SKINS IS CRITICAL FOR DISTRIBUTING IMPACT LOADS
5. CRUSHING ENERGY IS MORE THAN DOUBLE THAT OF CONFIGURATION SHOWN IN (a), AND ONSET RATE IS HIGHER

(b) ENERGY-ABSORBING STRUCTURES

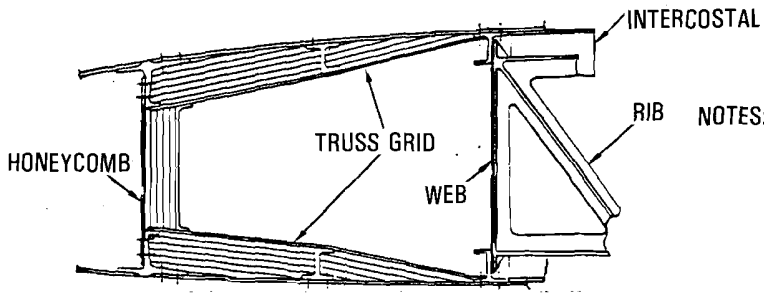

NOTES: 1. THE TRUSS GRID SANDWICH IS ENERGY-ABSORBING. THE HONEYCOMB SERVES AS "WADDING" FOR PARTIAL SEALING DURING CRUSHING OF THE TRUSS GRID STRUCTURE
2. ALL MATERIAL IS STRUCTURAL
3. WITH PERFORATED SANDWICH STRUCTURE, FUEL LOSS IS MINIMIZED BUT MAINTENANCE IS COMPOUNDED. THEREFORE, IT SEEMS ADVANTAGEOUS TO SEAL THE TANK AT THE INNER FACES OF THE SANDWICH
4. RIB DESIGN IN THE FORWARD BAY IS COMPLICATED BUT NUMBER OF RIBS CAN BE KEPT SMALL SINCE SKINS ARE STABILIZED

(c) ENERGY-ABSORBING STRUCTURES

Figure 5-6. Energy Absorbing Structures Concepts

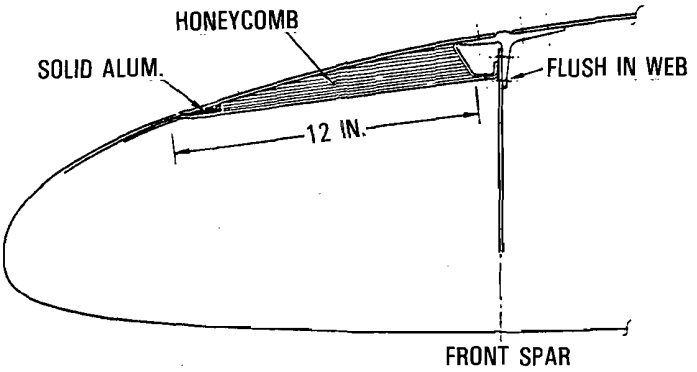

CRUSHING OF CORE 1,500 PSI
WITH AN AVERAGE THICKNESS = 1 IN.
p = 2 (1,500) = 3,000 LB./IN.
WORK = 3,000 (1) = 3,000 FT.-LB./IN. SPAN
FOR A 1 IN. SPAN:
WORK = 36,000 LB. INSIGNIFICANT!

(d) ENERGY-ABSORBING STRUCTURES

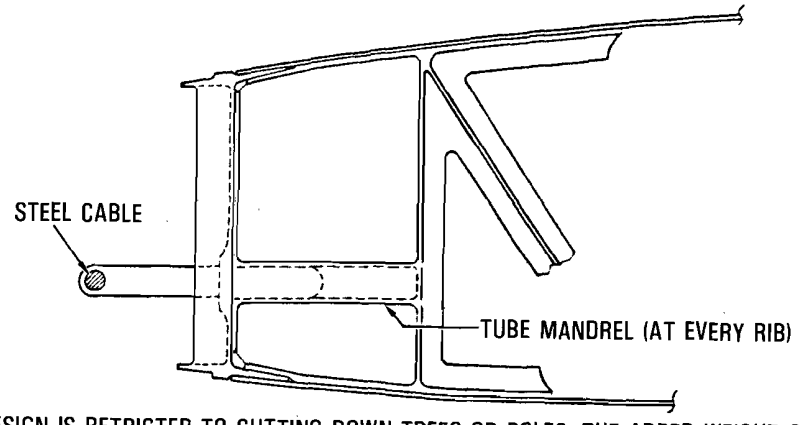

NOTE: THIS DESIGN IS RETRICTED TO CUTTING DOWN TREES OR POLES. THE ADDED WEIGHT CANNOT INCREASE THE BASIC STRENGTH OF THE WING AND, THEREFORE, IS DEAD WEIGHT

(e) ENERGY-ABSORBING STRUCTURES

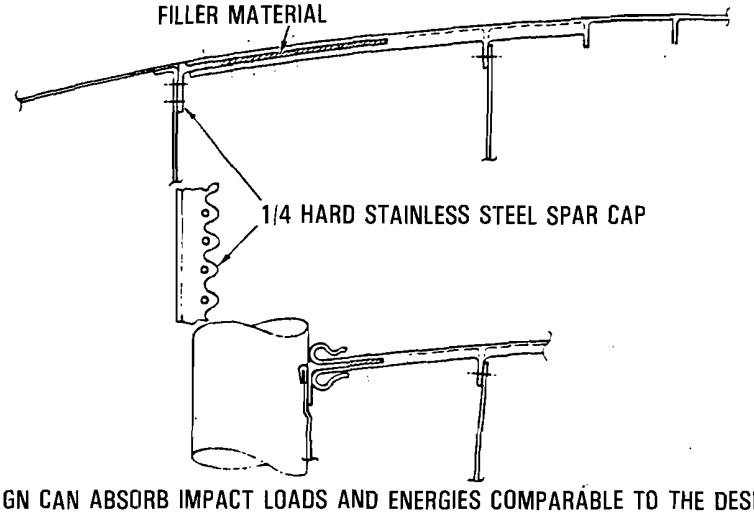

NOTES: 1. THIS DESIGN CAN ABSORB IMPACT LOADS AND ENERGIES COMPARABLE TO THE DESIGN SHOWN IN FIGURE 5-6(a)
2. ALL WEIGHT EXCEPT FOR THE FILLER IS STRUCTURAL IN WING BENDING
3. THE DESIGN IS DIFFICULT IF THE FAILURE PATTERN SHOWN IS TO BE FOOLPROOF

(f) ENERGY-ABSORBING STRUCTURES

Figure 5-6. Energy Absorbing Structures Concepts (Cont'd)

- Improved inertia fuel pressure design is not considered a high crash design priority based on available accident and crash test data. Present wing designs meet survivable crash g loads. Mounting of components on wing spar in current designs is often feasible.

- Figure 5-3 - Forward skin panel

  Concept (a) which uses honeycomb material is not considered appropriate for an integral wing fuel tank in commercial application because it is prone to leakage, difficult to maintain and susceptible to lightning. Concepts (b) and (c) represent lightweight viable approaches for new design. However, the benefit must be traded off against repairability, volumetric efficiency, cost, lightning protection.

  It appears that these designs provide better bending strength and/or protection from impact of the forward upper skin. However, based on accident and test results, this may not be a critical crash loading condition

- Figure 5-4 - Front spar protection

  Crash performance of the multiweb post, concept (a), depends on the rib configurations and frequency. It presents problems with regard to draining fuel and/or getting fuel to surge boxes.

  Honeycomb crush material is not desirable for wet cells as noted for figure 5-3 concepts and prevents mounting of components on front spar. Delta-wing concept (c) is acceptable for fuel dry bay provided the volume or capacity of fuel is not needed. Obviously, a big penalty for non-Delta wing designs.

  All these concepts may protect against tree or pole impact, but could be detrimental during slideout because large loads on lower surface could collapse lower skin.

- Figure 5-5 - Leading edge protection

  These concepts can be considered only if functionally practical, that is, doesn't interfere with operational systems; i.e., anti-icing. Also requires strengthened backup structure to distribute loads.

- Figure 5-6 - Energy-absorbing devices

  Honeycomb sections (a) and (b) are not viable for fuel use as stated earlier. Concept (c) is acceptable structurally provided bay is dry. Concept (d) doesn't appear to provide adequate protection, particularly from puncture. Concept (e) has little merit. The cable and shock-absorbing support is essentially present on most wings, now in

the form of ducting, electrical harnesses and cables. Would provide protection for a "select" impact condition only. Concept (f) is difficult when bay is wet. However, if dry bay is acceptable (trade-off volume, capacity), the design could be less complicated.

In general, only small amount of energy will be absorbed and penetration of the fuel cells could take place. The concepts may act more like a shock-absorber. It is suspected that these approaches would provide limited protection. these designs, generally, complicate mounting of components on the front spar.

Table 5-1 lists the various design concepts with regard to trade-offs between potential benefits and adverse considerations. While those which have merit for further consideration are noted, the individual concepts are not ranked. Based on the review of these concepts it is concluded that:

- Inertia loads are satisfactorily accommodated by conventional current-day plank and stringer design.
- Design for pole and/or tree impact should be considered if the penalty is small and the benefit is substantial. It will be difficult to eliminate fuel tank penetration altogether.
- Consideration should be given to minimizing the fuel spillage resulting from penetration by an obstacle or a distributed load; i.e., inclined mound. For example, as CRFS wing design could involve conventional plank and stringer skins, several fuel tank ribs breaking up the tankage spanwise using ribs similar to that shown in figure 5-1, concept (c) and applying structural design techniques to carry leading edge impact loads to the wing planks.
- A total system concept of reducing fuel spillage should include not only potential structural design concepts but valving and fittings to shut-off fuel flow during or subsequent to an impact.

5.2 FUSELAGE FUEL TANKS

Current commercial aircraft typically carry fuel in the wings. However, in some designs operational requirements dictate the provision of fuel tankage in the fuselage. The fuel that is in the body may be located in the unpressurized area (center wing) or in the pressurized area (e.g., the cargo compartment). Typically, the center wing tank is also an integral tank but it is isolated from the personnel compartment by a fume-proof and fuel-proof

TABLE 5-1. DESIGN TRADE-OFFS

CONCEPT		MAJOR CONSIDERATIONS - AFFECT ON							VIABLE CONCEPT
		WEIGHT	VOLUME LOSS	COST	MFG. COMPLEX.	DESIGN COMPLEX.	MAINT. AND INSPEC.	OTHER OPERATIONS	
Figure 5-2 - Front Spar Design for	(a)	X	2%	X	X	X	X	X	
o resistance to fuel inertia pressure									
o increased impact strength	(b)	X		X	X	X	X	X	
Figure 5-3 - Forward Skin Panel - Design for	(a)			X	X	X	X	X	
o Impact resistance	(b)				X	X	X	X	X
o Bending strength	(c)				X	X	X	X	
Figure 5-4 - Front Spar Protection - Design for	(a)	X	X			X	X	X	X
	(b)	X	X	X	X	X			
o Pole/tree impact	(c)	X	X	X	X			X	X*
Figure 5-5 - Leading Edge Protection - Design for	(a)	X			X			X	X
	(b)	X			X			X	X
o Pole/tree impact									
Figure 5-6 - Energy Absorption for	(a)	X		X	X	X	X	X	
	(b)	X		X	X	X	X	X	
o Pole/tree penetration	(c)	X		X	X	X	X	X	X
	(d)				X	X	X	X	
	(e)	X		X	X	X	X	X	
	(f)	X		X	X	X	X	X	

*Delta wing design only, if fuel not critical

enclosure as required by Federal Aviation Regulations paragraph 29.967. Fuel tanks such as the center wing tank which are located within the body contour are designed to meet the g loads prescribed for emergency landing FAR 25.561 and 25.963. When fuel is placed in the fuselage it is in closer proximity to the passengers as compared to the wing tank locations. As the accident data indicate, there is as propensity for fuselage lower surface damage in the more severe crashes. The accident data also show that under severe impact conditions the fuselage will normally break at locations of structural discontinuity. Particular attention must be paid to fuselage tank designs to minimize the risk of fuel spillage under these severe crash conditions. The following three contemporary fuselage tank configurations are examined with regard to their crash resistant features.

- Bladder fuel cells fitted in the lower fuselage
- Bladder-supported within a dedicated structural box
- Double wall cylindrical strap-in auxiliary tanks

1. Bladder Fuel Cells Fitted in The Lower Fuselage

A current example of this type of tank configuration is in a commercial wide-body transport airplane in which the bladder fuel cells are located below the wing and between the front and rear spars of the wing carry-through structure. Maximum utilization of available volume is achieved by conforming a bladder cell to the fuselage contour. Figure 5-7 shows a fuel cell layout. In the military version of this airplane, a three-cell tank is located in the forward lower cargo compartment and a four-cell tank is located in the aft lower cargo compartment. Access for maintenance and inspection is provided through the bottom of the fuselage to each cell. The fuel lines are located away from the bottom of the tanks and provide protection against hazards such as collapsing fuselage-mounted landing gear, wheels-up landings, and off-runway incidents.

Crash Resistant Features

- The cell is located below the wing between the front and rear spars of the wing carry-through structure, thus avoiding a likely fuselage break location.

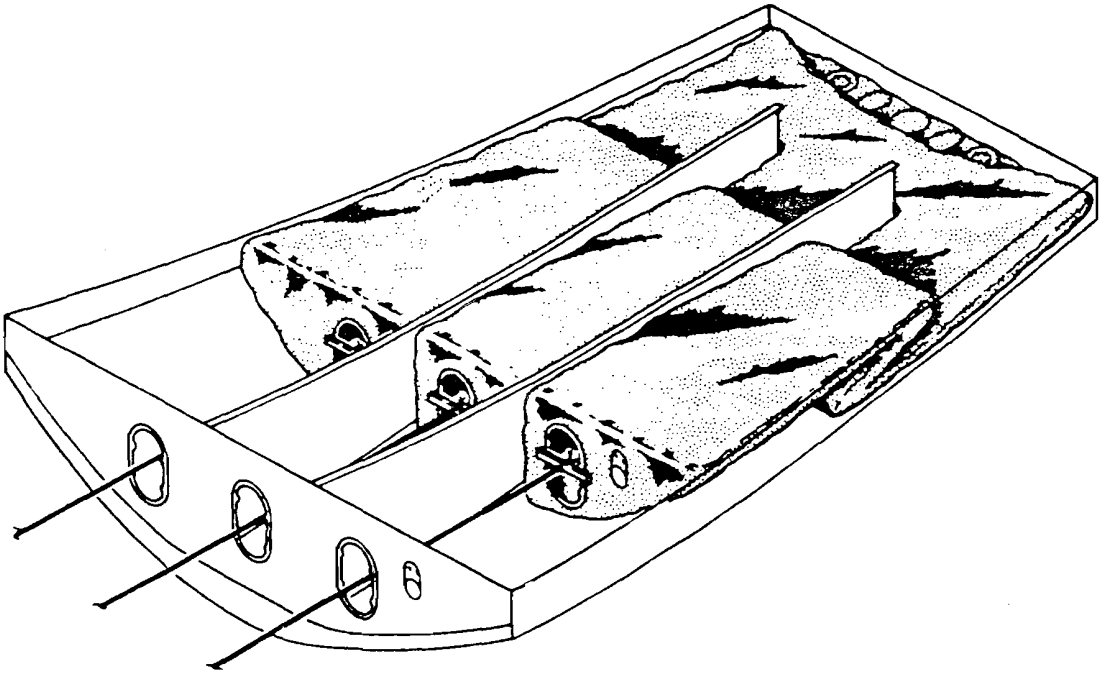

Figure 5-7. Bladder Cell Installation Wide-body Transport Airplane

- Bulkheads and beams provide stiffness and crash support in the event of an impact in which the mid-fuselage lower surface makes contact with the ground (i.e., gears retracted).

- Fuel system components are within the cell and located away from the most vulnerable surface during a crash impact.

- The use of a bladder reduces the likelihood of a massive leak, which reduces the chances of fuel reaching an ignition point and also provides more egress time.

Potential Improvements

- The bladder material used is MKF6396. A more tear/crash resistant material should provide additional protection.

- Use of sandwich construction or equivalent design between the tank cell and the lower fuselage skin below would afford energy-absorbing crushable structure in a region where impact with the ground could occur.

2. Bladder Supported Within a Dedicated Structural Box

This type of configuration is in use in current narrow-body and wide-body transport airplanes. The structural boxes are generally made of externally stiffened panels and are designed to support the bladder cell for all operational conditions, including the crash environment. This type of tank is generally located in the lower fuselage cargo compartment. The designs reviewed employ integral fitting attachments in the box to transfer all the loads to the aircraft floor and airframe shell at specific locations through predetermined load paths. The location of the fuselage fuel tanks in a current wide-body (cargo version) airplane is shown in figure 5-8. The general arrangement of the tank and its construction are illustrated in figure 5-9. The load paths for wide-body aircraft is shown in figure 5-10. In this design, gaps are maintained outboard of the upper tank box fittings to assure that the tank box does not experience loads from the fuselage.

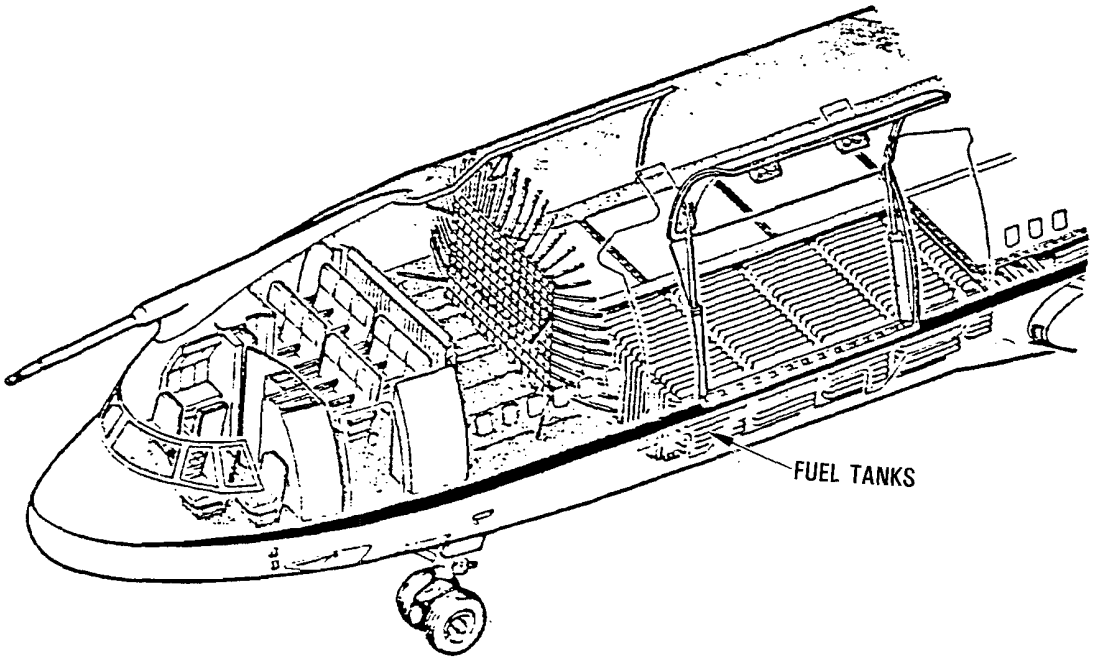

Figure 5-8. Location of Fuselage Fuel Tanks in Wide-body Transport Category Airplane, Tanker Configuration

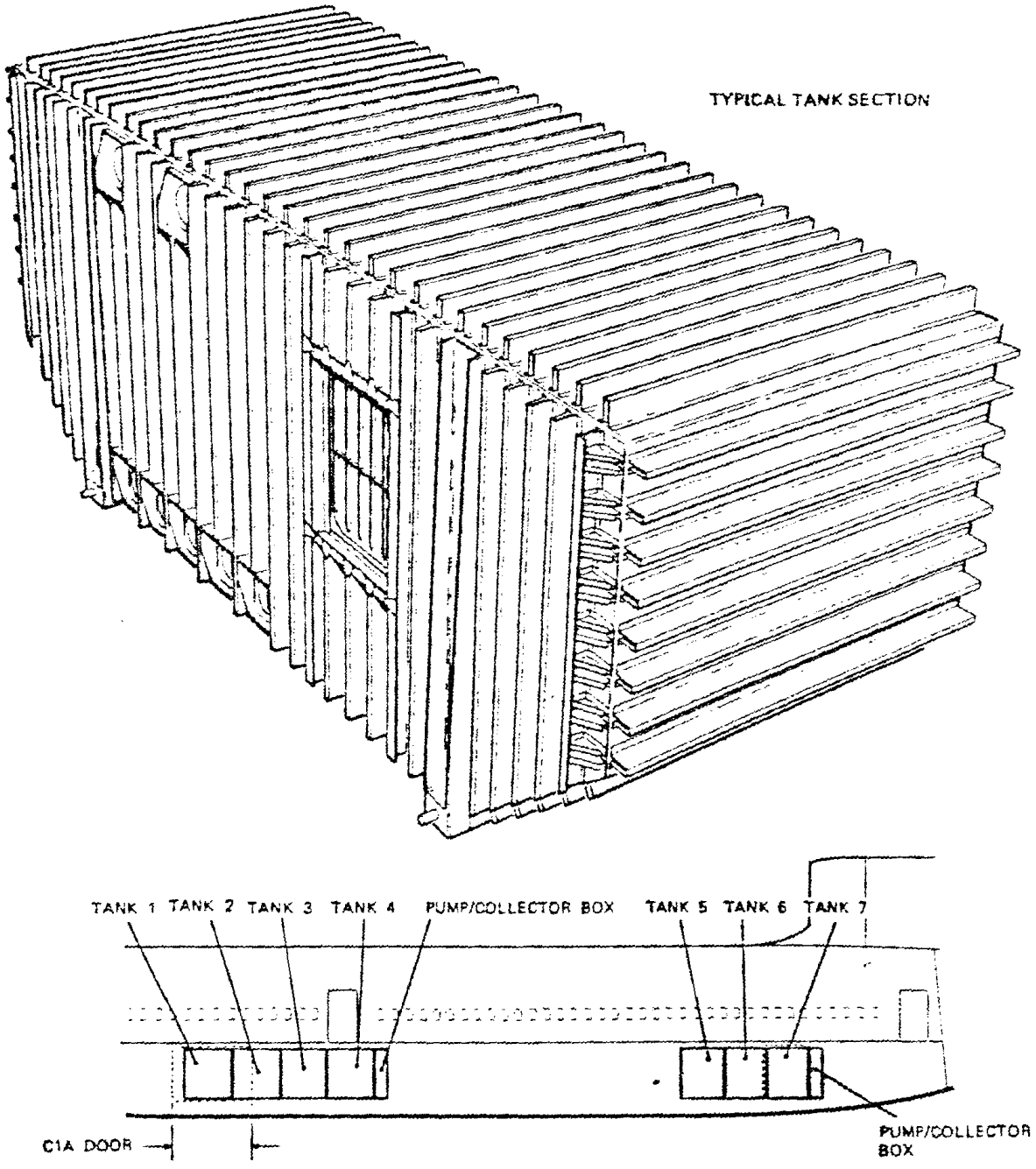

Figure 5-9. General Arrangement of Fuselage Fuel Tank Specimen

+VE LOAD CONVENTION
(LOADS APPLIED TO A/C)

FLIGHT LOADS ONLY -
POINT A - VERTICAL AND DRAG LOAD ONLY
POINT B - VERTICAL, DRAG AND SIDE ONLY
POINT C - VERTICAL LOAD ONLY
POINT D - VERTICAL AND SIDE LOAD ONLY

CRASH CONDITION -
POINT E & F - FWD LOAD ONLY BY VIRTUE OF SLOPPY LINK
POINT E, F, G, H - SIDE LOADS USING BUFFER PADS ON CORNERS ONTO FLOOR BEAM
POINTS A-D - AS FOR FLIGHT CONDITIONS

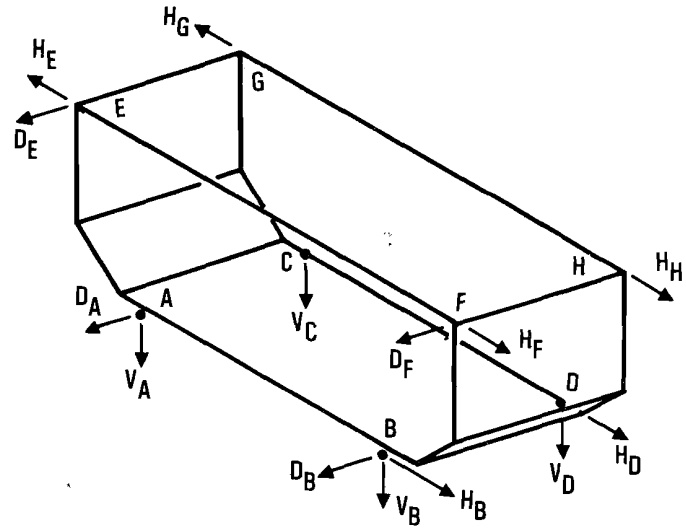

Figure 5-10. Wide-body Aircraft Fuselage Fuel Tank Load-Paths

The general arrangement of an installation in a narrow-body airplane is shown in figure 5-11. The body tank is supported from the passenger floor beams and the fuselage frames. The tank is composed of an aluminum honeycomb outer shell with two bladder cells inside. The tank is supported in such a manner as to preclude body structure deflections to load the fuel tank and clearances are provided around the tank to adjacent structure.

The fuel tank (figure 5-12) consists of two modules which are constructed of hot bonded aluminum honeycomb panels fastened together with angles. This is a typical corner of the tank. Honeycomb thickness varies from 1/2 inch to 1 3/4 inch with face sheets of 0.04 to 0.07. The face sheets have corrosion inhibiting adhesive primer applied prior to bonding and they receive an additional coat of paint after bonding. Dense core is provided for stability in fastener attachment areas. Edges of the panels are potted. Panels are fastened together with angles by bolts and lockbolts. A typical insert consists of a metal plate which is bonded to the tank panels. These are used for fuel, vent and drain line penetration and for access door attachment. A typical module joint consists of angles bolting the tank walls to the intermediate bulkhead. An external splice plate is installed in selected locations. The tank is pressure-sealed on the inside by fillet sealing fasteners, angle fittings, etc. Corrosion protection sealing is added to selected areas on the outside of the tank.

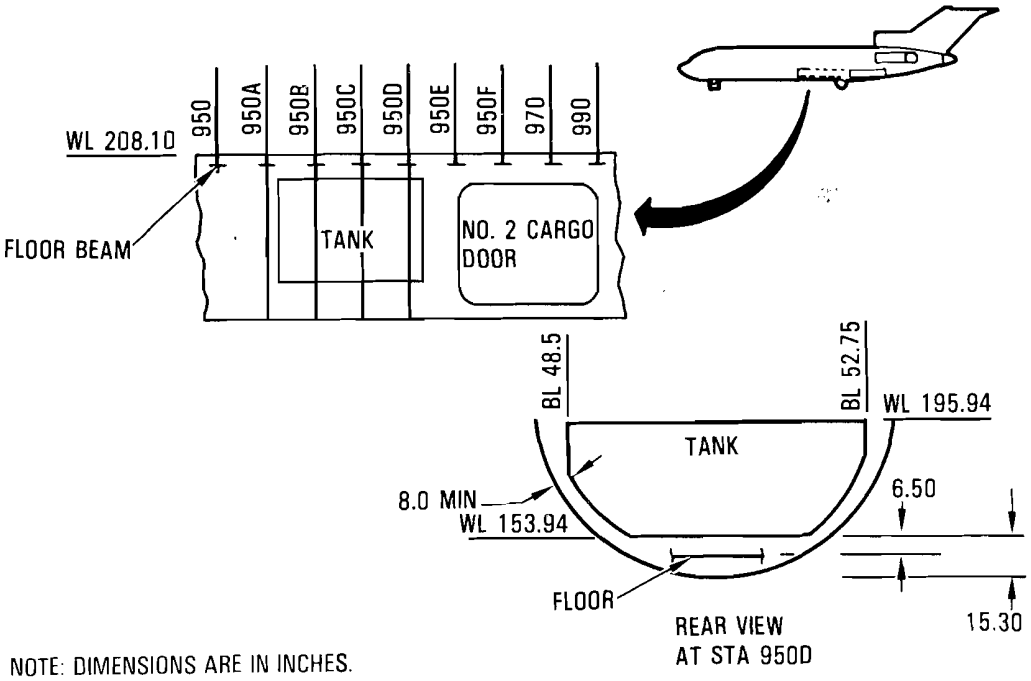

Figure 5-11. Fuel Tank General Arrangement, Narrow-Body Transport Airplane

Forward and aft loads are reacted into the skin through fittings and two struts, one strut on each side of the tank. The struts attach at pin joints on both the tank and the body structure. Spherical bearings are installed at both joints to provide for relative movement between the tank and structure due to fuselage deflections from pressure and tank loads. Tank loads are transferred into the frames and skin by added support structure between body frames. The tank attachment layout is shown in figure 5-13.

The fuel and vent lines that connect the auxiliary tanks to the main fuel system incorporate drainable and vented shrouds. Additionally, these lines are either designed to break away from the auxiliary tank or sufficient stretch is provided to accommodate tank movement without causing fuel spillage. Hoses that are required to stretch are subjected to what is referred to as the guillotine test. The hose is pressurized and clamped at both ends to simulate its mounting in the aircraft, then a sharp-pointed load is applied in the middle of the hose. The hose must not leak when stretched to its maximum.

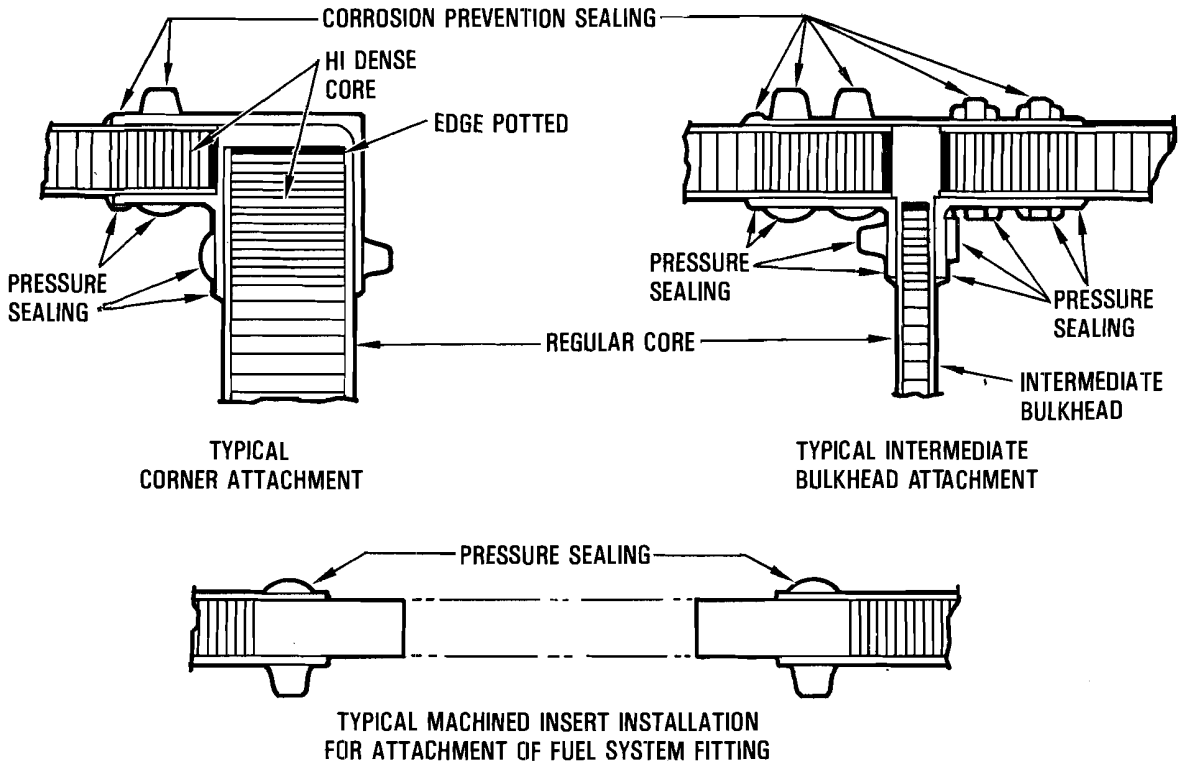

Figure 5-12. Fuel Tank Shell Construction

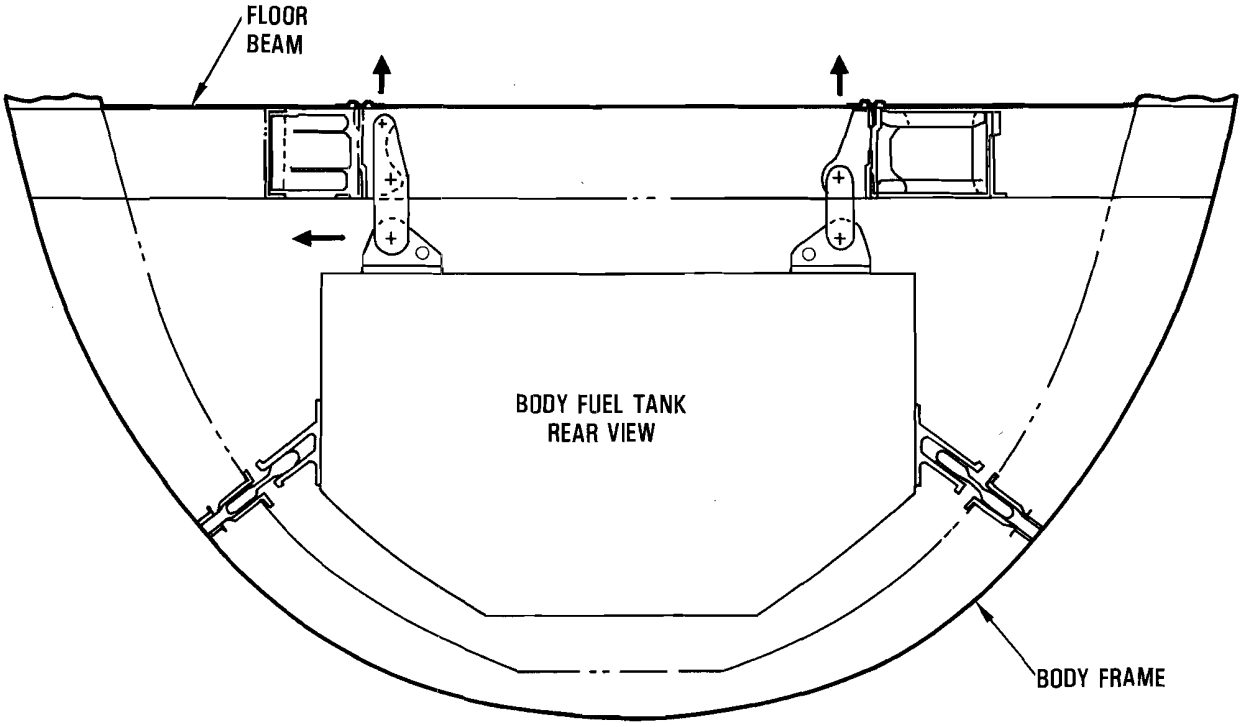

Figure 5-13. Tank Attachment Layout

Crash Resistant Features

- The location provides adequate crush distance above the fuselage lower skin and avoids placement in the fuselage where breaks typically occur.
- There is separation from the passenger compartment.
- The use of bladder cells within dedicated structure provided added protection from puncture.
- The designs allow for tank displacement to minimize or reduce fuel line breakage.
- Design to meet, or exceed, FAR requirements.
- The separately contained cells are designed to react crash loads via predetermined load-path considerations.

Potential Improvements

- The use of self-sealing breakaway fittings to assure that fuel spillage is minimized in the event of large displacement.
- Use of a more tear-resistant bladder material.

3. Double Wall Cylindrical Strap-in Auxiliary Tanks

The supplemental fuel system employed by one airline for its narrow-body transport airplanes involves the use of quick-mounting easily removable fuselage fuel tanks. The complete supplemental system consists of double-wall tanks, a cockpit auxiliary fuel panel, a refueling/defueling panel accessible to ground service personnel, fuel lines connecting the supplemental system to the main tanks, and electrical/electronic systems for fuel monitoring and flow control. The tanks are installed in the cargo compartment. They are structurally supported in cradles attached to the passenger cabin floor beams (figure 5-14). This approach permits the installation of from one (1) to ten (10) fuel tanks with added capacity of up to a maximum of 2530 gallons. Removability of the tanks also simplifies the maintenance of the lower/inner airframe and/or components within the fuselage center section. No fuel transfer pumps are used. Fuel transfer is accomplished from the cockpit by closing the vent valve, opening the air pressure valve and selecting the appropriate tank. The installed weight ratio of the complete supplemental system is .92 lb/gal. The system is designed to meet FAR25 crashworthiness criteria.

Crash Resistant Features

- Located in region where adequate fuselage crush is anticipated and away from break/separation regions. A relatively small amount of fuel (160 to 440 gallons maximum) is spilled, if a single tank ruptures.

Potential Improvements

- Relocation of interconnecting lines from below the tanks.
- Plumbing should be moved from external and below the tank to internal and above, where possible.
- Use of flexible lines.
- Addition of redundant support structure to prevent tanks from breaking free if the fuselage experiences extensive damage.

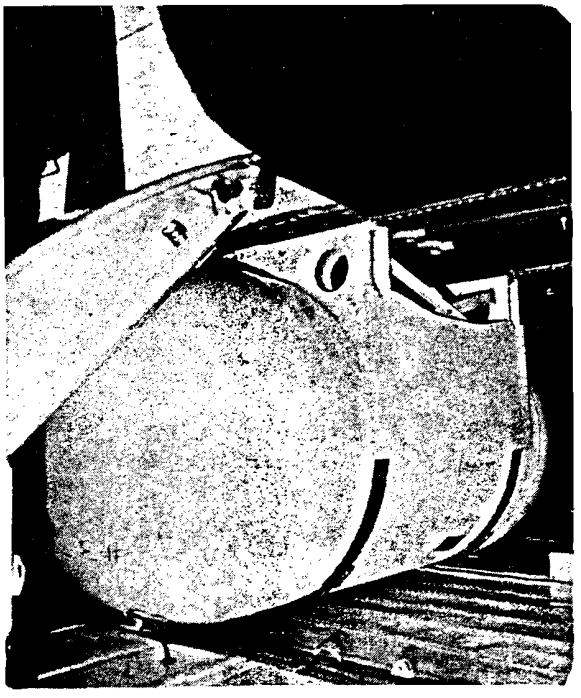

Figure 5-14. Cradle-mounted Supplemental Tanks Suspended from the Passenger Floor

SECTION 6

STATE-OF-THE-ART TECHNOLOGY

6.1 SUMMARY OF TRANSPORT AIRPLANE DATA

Transport airplane accident, test and analyses data are presented in Section 3. Table 6-1 summarizes the crash scenario related data. The accident records show three potential scenarios. The full-scale and section tests address various aspects of the candidate crash scenarios. The analytical studies which are performed in support of the scenarios (except for the obstacle penetration loads) indicate levels of fuselage crush and dynamic pulses which are considered to be at or below airframe structural integrity limits as defined by ultimate vertical shears and bending moments. Table 6-2 describes the accident data that relates to fuel containment. Full-scale and section test data which are applicable to the various fuel spillage results are noted. The analyses results are the same as stated in table 6-1. The fuselage located tanks are exposed to the same crush and loading environments as noted for the air-to-ground and ground-to-ground scenarios, without obstructions. The wing responses obtained in the analyses indicated that wing strength integrity would be maintained for about the same level of impact velocity as that for the fuselage. Thus, similar dynamic pulses are suggested. In addition to the dynamic pulses, the static design requirements specified in FAR-25 apply. The data associated with concentrated and distributed load tests are presented in Section 3.2.3. Table 3-5 summarizes the types and ranges for the various tests, as well as the results.

6.2 POST-CRASH FIRE REDUCTION ASSESSMENT

Figure 6-1 depicts the accident events that can lead to the fire hazard. The main gear can collapse or separate during an air-to-ground impact or during a ground slide-out. Its collapse can lead to several subsequent failures including wing overload, engine separation, lower wing surface tear, fuel tank penetration, and fuselage break. Obstacles can provide concentrated loads acting to penetrate the wing and/or fuel tank structure (i.e., trees, poles, rocks) or distributed loads (i.e., mound, vertical obstructions) to

TABLE 6-1. SUMMARY OF TRANSPORT AIRPLANE DATA - CRASH SCENARIOS

Data

Accident Records	Full-Scale and Section Tests			Analyses Results
Crash Scenarios	L1649 (L) and DC-7 (D)	CID (C) and Laurinburg (L)	Section (S) And DC-7 Wing (W)	Air-to-Ground Ground-to-Ground (No Obstructions, Wing Impact)
1. Air-to-Ground (Hard Landing)* • Sink Speed (Gears Extended/Retracted) (Range): 10-40 ft/sec (Avg.): 20 ft/sec • Pitch Attitude (Range): -7° to15° (Avg.): -4° to 4.7° • Roll Altitude (Range): 0 to 42° (Avg.): 17° • Yaw Attitude 0 to 10° • Fwd Velocity: Stall – Landing * Ref. 3 Data	Gear Loss via Obstruction– No significant Wing or Fuselage Response (L)(D)	Gears Retracted (C) Roll,Yaw = 13° Pitch = +1° Fwd Velocity = 150 kts Sink Speed = 17.3ft/sec Outboard Wing Tip Damage. No Fuel spill Gears Retracted (L) Symmetrical Impact Pitch = +1° Sink Speed = 17 ft/sec No Forward Velocity	No Vertical Impact (S)(W)	• Fuselage Tanks Crush 24" Aft 14" Fwd 10-12" Mid Dynamic Pulse (Triangular) Vertical V = 25 ft/sec g_{peak} = 10.4 Longitudinal V = 30ft/sec g_{peak} = 9.3 t = 0.200 sec Combined Vertical-Longitudinal V = 27.9 ft/sec Resultant g_{peak} = 11.5g Resultant t = 0.150 sec V_{VERT} = 27.9 Cos 30° V_{LONG} = 27.9 Sin 30°
2. Ground-to-Ground (Obstacles) • Obstacles – Embackment, Mound, Tree, Pole • Fwd Velocity: 40 to 150 kts** ** Avg. Fwd Velocity = 83 kts, Accidents with Open Fuselage Breaks. Below 57 kts, Slight Fuselage Breaks Noted (Ref. 1)	Mound Impacts* 6°, 20° (L) 8°, 20° (D) Initial Sink Velocities 18.5 ft/sec (L) 32 ft/sec (D) * Fuselage Separation Occurred in All But 6° Slope Impact.	Slideout After Fuselage Impact @ 14 ft/sec Sink Velocity. No Obstruction Until Contact with Wing Cutters (C) No Forward Velocity No Obstruction (L)	Pole Impact Forward Velocity = 7 kts (W)	• Wing Tanks Dynamic Pulses Vertical V = 26 ft/sec g_{peak} = 13.5 t = 0.120 sec Longitudinal V = 32.5 ft/sec g_{peak} = 9 t = 0.225 sec Combined Vertical-Longitudinal V_R = 28.5 ft/sec Resultant g_{speak} = 14.8 Resultant t = 0.120 sec V_{VERT} = 14.8 Cos 25° V_{LONG} = 14.8 Sin 25°
3. Air-to-Ground (Obstacles) • Obstructions: Tree, Pole, Slope • Fwd Velocity: 100 – 150 kts •Sink Speed, Altitude: Same as No. 1	Wing Low Obstruction (Pole) – Fwd Velocity 112 kts (L) 139 kts (D) Extensive Wing and Fuel Tank Damage (L)(D)	Wing Low (C) Fwd Velocity = 150 kts 13° Roll Outboard Wing Damage. No fuel Spill Due to Imapct No Fwd Velocity. No Obstruction. Wing Center Section Crushed. No Wing Failure. Engine/Plyon Attachment Failure (L)	No Vertical Velocity (S)(W) Pole Impact with Fwd Velocity = 77 kts (W)	

TABLE 6-2. SUMMARY OF TRANSPORT AIRPLANE DATA - FUEL CONTAINMENT

Data				
Accident Records	Full-Scale and Section Tests			Analyses Results
Fuel Containment	L1649 (L) and DC-7 (D)	CID (C) and Laurinburg (L)	Section (S) and DC-7 Wing (W)	Air-to-Ground Ground-to-Ground (No Obstructions, Wing Impact)
• Tank Rupture (107) 1. Wing Break (67) – Severe Air-to-Ground and Overrun into Obstructions Trees (21) Vertical Obstruction (10) Ground Drag (18) Inertia Loads (8) Wing Low Impact (7) 2. Gear/Pylon Tear (7) – Severe Ground Impact and Overrun/Obstruction 3. Lower Surface Tear (8) – Sliding Overrun 4. Engine/Pylon Break (56) – Touchdown Short, Overrun/Obstruction 5. Fuel Line Rupture (45) – Engine Spearation Overrun/Obstruction	• Pole Impact - Shears Outboard Wing Tip (L)(D) - Penetrates Mid-Wing and Breaks Wing at Impact Location, Crushes Leading Edge. Ruptures Mid-Wing Tanks (L, D) - Outboard Tank Rupture (D)(L)	• Pole - Not Involved (C)(L) - Wing Cutter Destroyed Wing (C)	• Pole - Wing Fuel Tanks Severely Damaged. CRFT Leakage Rate is Less - Integral (W) Not Applicable (S)	• Fuselage Tanks Crush 24" Aft 14" Fwd 10 - 12" Mid Dynamic Pulse (Triangular) Vertical ΔV = 25 ft/sec g_{peak} = 10.4 Δt = 0.150 sec Longitudinal ΔV = 30 ft/sec g_{peak} = 9.3 Δt = 0.200 sec Combined Vertical-Longitudinal ΔV = 27.9 ft/sec Resultant g_{peak} = 11.5 g Resultant Δt = 0.150 sec ΔV_{VERT} = 27.9 Cos 30° ΔV_{LONG} = 27.9 Sin 30°
	• Wing Low - Ruptured Outboard Tank Upon Impact (L)	• Wing Low (C) - Engine Separation and Outboard Wing Section Failed Upon Impact. - Wing Bending Strength Not Exceeded nor Fuel Spill on Impact. - Not Applicable (L)	• Wing Low - Not Applicable (S)(W)	
• Wing Failure Locations 1. Root [19] – Air-to-Ground Overrun/Obstruction 2. Outboard [9] – Obstruction, Wing Low Impact ( ) Denotes Number of Known Occurrences Cited in Ref. 1 [ ] Denotes Number of Known Occurrences Cited in Ref. 3	• Slope Impact - Break at Root, Fuel Tank Opens (Initial Slope (6°(L), 8°(D))) - Separates at Root For Second Slope (20°) Impact (L)(D) - Ruptured Mid-Wing Tank	• Slope Impact - None Involved (C)(D) - Center and Aft Fuselage Sections Crushed 8" and 12", Respectively Due to Flat Ground Impact - Engine/Separation Occurred (L)	• Slope Impact - Not Applicable (S)(W)	• Wing Tanks Dynamic Pulses Vertical ΔV = 26 ft/sec g_{peak} = 13.5 Δt = 0.120 sec Longitudinal ΔV = 32.5 ft/sec g_{peak} = 9 Δt = 0.225 sec Combined Vertical-Longitudinal ΔV_R = 28.5 ft/sec Resultant g_{peak} = 14.8 Resultant Δt = 0.120 sec ΔV_{VERT} = 14.8 Cos 25° ΔV_{LONG} = 14.8 Sin 25°
		- Crush Varied From 6" Fwd Fuselage to 12" Aft Fuselage for Ground Impact (0° to - 2° Nose-Down Pitch) (C) - Engine/Pylon Attachment Failure (C)(L)		

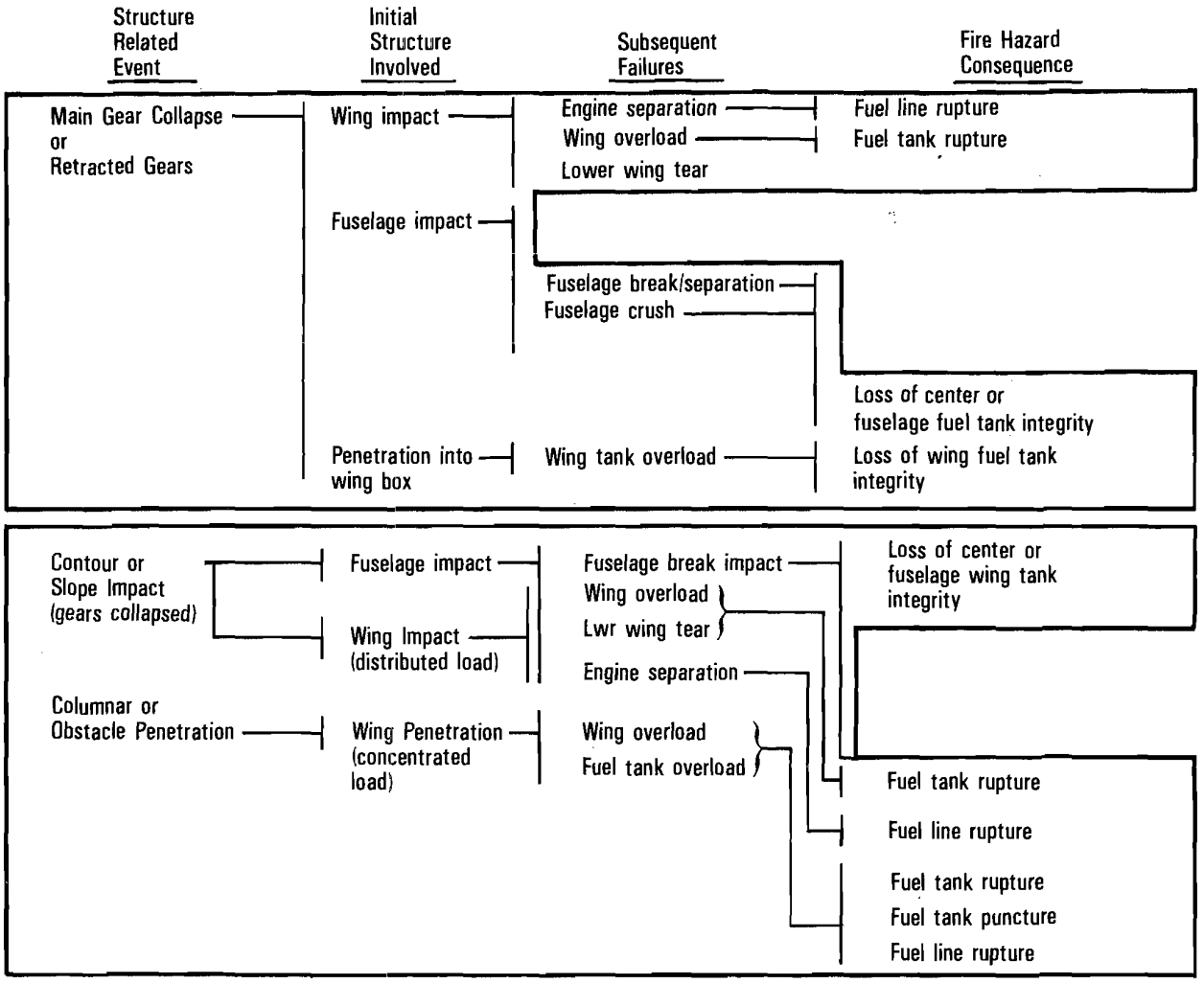

Figure 6-1. Accident Events which Lead to a Fire Hazard

cause wing failures. The consequence of the structural component failures is fuel line rupture, fuel tank rupture and/or fuel tank puncture/penetration. The assessment of the applicability of CRFS technology should take into consideration that different design concepts could be more appropriate for a particular accident condition and that possibly more than one approach is warranted. Table 6-3 illustrates the potential relationship between design approach and structural failure event.

TABLE 6-3. THE RELATIONSHIP BETWEEN DESIGN APPROACH AND STRUCTURAL FAILURE

Structural Failure	Potential Applicable Design Approaches
• Engine Separation	Breakaway Valves, Flow Restrictors, Seal Design, Frangible Fittings
• Wing Overload	Tank Material/Strength, Pressure Relief, Tank Isolation
• Lower Wing Tear/Slide-Out Friction	Ductile Lower Wing Material, Lower Front Spar Reinforcement, Skin Doublers
• Landing Gear Penetration	Bladder Tank (Fuselage), Crushable Structure, Attachment Fittings, Breakaway Valves
• Fuselage Crush	Bladder Tank, Crushable Structure, Tank Fittings
• Tree/Obstacle Impact	Leading Edge Reinforcement, Double Wall Separation, Front Spar Reinforcement, Foam Liner

Table 6-4 shows several areas where improvements provide potential for reducing the wing fuel tank fire hazard. Along with each potential area, supporting accident data and some conceptual design considerations are also provided. A brief discussion of the assessment of the post-crash fire hazard reduction for wing fuel tanks is described below:

1. System Approach -

   Accident data shows that fuel tank spillage generally results in post-crash fires. Ruptured fuel tanks and fuel lines are the ultimate cause regardless of what events or structural failures initiate the fuel tank/line rupture. The more moderate or limited the spill the better chance to avoid the post-crash fire and allow occupants more exit access and evacuation time.

TABLE 6-4. ASSESSMENT - WING FUEL TANK DESIGN FOR POST-CRASH FIRE HAZARD REDUCTION

POTENTIAL AREAS FOR IMPROVEMENT	SUPPORTING ACCIDENT DATA	CONCEPTUAL DESIGN CONSIDERATIONS
1. SYSTEMS APPROACH TO REDUCE POST-IMPACT FUEL FLOW	REF. 1 DATA: 67 FUEL TANK SPILLAGE OCCURRENCES FOR 94 WING POD ENGINE AIRCRAFT RESULTED IN 41 FUEL LINE FIRES AND 4 FUEL LINE FIRES WITHOUT TANK SPILLS. IN ADDITION, 6 FUEL LINE FIRES FROM 38 FUEL TANK SPILLS FOR 59 AFT BODY ENGINE AIRCRAFT. 83% OF LARGE FUEL SPILLS (92 TOTAL) RESULTED IN FIRE OF WHICH 59% (45) WERE RELATED TO FUEL LINE RUPTURE. 53% OF SMALL/MODERATE FUEL SPILLS (13 TOTAL) RESULTED IN FIRE OF WHICH 15% (2) WERE RELATED TO FUEL LINE RUPTURE. REF. 3 DATA: WING-ROOT SEPARATION IS A MAJOR VULNERABLE AREA. 14 OF 48 FIRE HAZARD ACCIDENTS RELATE TO WING FUEL LINE RUPTURE. 21 FUEL TANK RUPTURE OCCURRENCES.	MINIMIZE FUEL FLOW HAZARD • COMPARTMENTIZE FUEL TANKS • FRANGIBLE FITTING • BREAK-AWAY AND/OR SHUTOFF VALVES • FLEXIBLE LINES • SELF-SEALING FITTINGS/ATTACHMENTS • DESIGN DETAILS, i.e., LINE ROUTING, ATTACHMENT, PROTUBERANCES • BURN OFF INBOARD TANK FUEL PRIOR TO OUTBOARD TANK FUEL
2. REDUCE POTENTIAL FOR WING BREAKAGE DUE TO: a) CONCENTRATED LOADS, i.e., TREES/POLES b) DISTRIBUTED LOADS i.e., INCLINED MOUND, WING LOW IMPACT, VERTICAL OBSTRUCTION, GROUND DRAG LOAD	REF. 1 DATA: SHOWS 107 WING TANK RUPTURE OCCURRENCES (85 FIRES). WING BREAKAGE OCCURRENCE; 67 KNOWN, 9 PROBABLE. CONCENTRATED LOADS (21)-TREE/POLE. DISTRIBUTED LOADS; GROUND DRAG (18), VERTICAL OBSTRUCTION (10), WING LOW (7). INERTIA LOADING (8). REF. 3 DATA: MAJOR CONTRIBUTERS TO FIRE; WING IMPACT WITH TERRAIN AND OBSTACLE PENETRATION (41).	INCREASE RESISTANCE TO IMPACT LOADS (CONCENTRATED AND DISTRIBUTED) • STRONGER FRONT SPAR CAPS • INCREASED FORWARD SKIN THICKNESS CHORDWISE FROM FRONT SPAR TO 2ND STRINGER (UPPER AND LOWER) • USE OF WEBBED RIBS IN LIEU OF TRUSS RIBS • FULL INTERCOSTAL FROM FRONT TO REAR SPAR (TENSION DESIGN AS WELL AS SHEAR)
3. IMPROVED LOWER SURFACE TEAR RESISTANCE	REF. 1 DATA: 8 KNOWN AND 17 PROBABLE, 40% OF WHICH HAD FIRE RELATED FATALITIES. FIRE TENDS TO BE LOCALIZED IN WING AREA.	CONTAIN FUEL IN TANK OR RESTRICT FLOW THROUGH RUPTURE OR HOLE IN TANK. • USE OF MORE DUCTILE MATERIALS FOR LOWER SPAR CAP AND SKIN PANEL. • INCREASED RESISTANCE TO IGNITION • REDUCE FUEL LEAKAGE AS IN NO. 1
4. PREVENTION OF TANK RUPTURE DUE TO GEAR/PYLON TEAR	REF. 1 DATA: 7 KNOWN AND 17 PROBABLE ACCIDENTS CAUSING TANK RUPTURE. LANDING GEAR COLLAPSE/SEPARATION IS A MAJOR FACTOR IN 50% OF FUEL SPILLS AND A LESSER FACTOR IN 30% OF ACCIDENTS RESULTING IN WING LOWER TEAR/RUPTURE. GEAR FAILURE LEADS TO LOWER SURFACE TEAR (12) WING BREAKS (12), WING BOX TEAR (14) AND TANK LEAKAGE (4) AND, THUS, A FACTOR IN 42 FIRES. WING MOUNTED ENGINE/PYLON SEPARATION/COLLAPSE INVOLVED IN 95% OF WING LOWER SURFACE TEAR/RUPTURE. THIS MODE OF FAILURE OCCURS MOSTLY DURING SHORT/HARD TOUCHDOWN, OVERRUNS AND VEERING OFF RUNWAY. MOST SIGNIFICANT CONSEQUENCE IS RUPTURED FUEL LINES. REF. 3 DATA: 13 ACCIDENTS INVOLVING ENGINE AND/OR LANDING GEAR COLLAPSE/SEPARATION.	PREVENT WING BOX GEAR PENETRATION AND/OR MINIMIZE FUEL FLOW • ASSURE PROPER FUSING FOR A CLEAN OVERLOAD • MORE TOLERANT DESIGN FOR CRASH CONDITIONS • REDUCE LEAKAGE AS IN NO. 1

A potential resolution of this hazard is to minimize the flow rate and volume during the post-impact period. A design approach that includes a Crash Resistance Fuel System (CRFS) is a logical consideration. For example, compartmentizing the wing fuel tanks in the spanwise direction with appropriate interconnecting components which consist of frangible and self-sealing attachments, breakaway valves, and flexible lines could help reduce fuel volume loss and rate of flow. This approach essentially involves meticulous attention to good detail design practice. The CRFS concept, except for the lack of crash resistant bladder type cells, which is difficult for most wing contours, is followed by rotary-wing aircraft manufacturers.

2. Reduced Potential for Wing Breakup -

Fuel tank rupture occurs often as a result of concentrated and/or distributed loads. Accident data have shown that the major contributions to these types of loading are trees/poles, vertical obstructions, inclined mounds, and ground drag. To a lesser extent, fuel inertia loading has been mentioned as a contributor. However, tests and analyses data show that current aircraft design for this type of loading is adequate. Thus, it is surmised that excessive fuel inertia loading occurs at extreme accident conditions and/or in conjunction with other contributors. It would appear that a realistic approach to this type of problem is to increase resistance to concentrated and distributed loads by considering one or more of such design alternatives as:

- stronger front spar caps
- increased upper forward skin thickness in chordwise direction
- use of webbed ribs in lieu of truss ribs
- use of full intercostal from front to rear spar

To consummate this approach the impact environment (i.e., velocity, obstacle) has to be defined. The accident data and previous R&D efforts have been reviewed for this purpose. For example, the literature review has shown that tests involving impacts of both unmodified and modified DC-7 wings at 40 ft/sec (27 mi/hr) with a steel pole have been performed. The accident data show that airplane fuselage breakup, in which a relatively high percentage (> 30 percent) of onboard fatalities occur, is at an average forward velocity more like 135 ft/sec.

3. Improved Wing Lower Surface Tear Resistance -

Accident data show that there are 8 known and 17 probable occurrences of lower surface tear leading to wing tank rupture. Forty (40) percent of these events had fire related fatalities. This type

of failure generally occurs as a result of either landing gear or engine pylon separation allowing high aft ground loads to act directly on the lower surface.

The combination of more materials in the lower spar cap and skin panel, which are more ductile and resist ignition better, are desirable. Materials like 2219-T4 and 2020-T4 probably provide the highest tear resistance and ductility. 7075-T7657 is currently used because it has a high strength and good corrosion resistance, which are essential requirements. However, 7075-T7657 has only fair ductility and tear resistance.

Since most of the fires associated with this type of failure tend to be localized in the wing area, some of the previous approaches to limit fuel flow might be appropriate.

4. Prevention of Fuel Tank Rupture Due to Gear/Pylon Separation -

Landing gear and engine pylon separation/collapse are major contributors in accidents which result in fuel spills and subsequent fires. Their contributions are more indirect in that other structural systems or elements can fail and lead to fuel tank/line rupture and penetration.

Ideally, the designs of landing gear and engine attachments and failure modes should assure proper fusing for a clean overload. The current FAR25 requirements specifically state in P25.721(a) that a landing gear failure will not result in spillage of enough fuel from any part of the fuel system to constitute a fire hazard, and (b) the airplane must be capable of landing on a paved runway with one or more landing gear legs not extended without sustaining a structural component failure that is likely to cause spillage of enough fuel to constitute a fire hazard. Current large transport airplane landing gears have breakaway provisions designed to meet P25.721 as noted in figure 6-2.

It is common for wing-mounted engines to separate during crash impact conditions. For example, a current wide-body airplane design (figure 6-3) has the engine attached to the pylon at two locations. The pylon attaches to the wing at the front spar through forward inboard and outboard joints and to the wing rear spar via a drag strut. The design of the engine/pylon/wing installation is such that the engine will separate cleanly before the wing (or fuselage) structure is overstressed. To prevent wing box tear and/or minimize post-crash fuel flow requires proper fusing for both the respective landing gear and wing pylon attachments to ensure clean separation. A review of the designs to perform properly at the survivable crash envelope would be appropriate. Developing more tolerant designs in the sense that they would not separate or collapse is probably unrealistic. However, assuring restricted fuel flow after collapse, by incorporating design features noted for Item Number 1, has merit.

MAIN LANDING GEAR BREAKAWAY PROVISIONS

EACH MAIN LANDING GEAR ASSEMBLY IS MOUNTED TO THE GEAR ATTACHMENT RIB STRUCTURE IN EACH WING AND TO STRUCTURE IN EACH FUSELAGE WHEEL WELL. PRINCIPAL LOADS ARE TAKEN THROUGH FORWARD AND AFT TRUNNION PINS WHICH ARE INSTALLED THROUGH THE INTEGRAL ARMS OF THE STRUT CYLINDER. WHEN DOWN AND LOCKED THE SHOCK STRUT IS RESTRAINED IN THE VERTICAL POSITION BY SIDE BRACES, AND A LATERAL BRACE TRANSMITS SIDE LOADS FROM THE STRUT BACK TO THE WING. THE RETRACTION CYLINDER IS ATTACHED DIRECTLY TO A LUG ON THE SHOCK STRUT.

THE MAIN LANDING GEAR SUPPORT STRUCTURE IS A TORQUE BOX CANTILEVERED FROM THE REAR SPAR, AND LANDING LOADS ARE TRANSFERRED VIA THIS BOX INTO THE WING THROUGH A COMBINATION SHEAR-TENSION JOINT. SIX LARGE TENSION BOLTS PENETRATE THE SPAR AND TRANSFER LOAD INTO LARGE INTERNAL FITTINGS ATTACHED TO THE BACK-UP RIBS. THUS, THE MAIN LANDING GEAR IS LOCATED AFT OF THE FUEL TANKS AND IS ATTACHED TO ITS SUPPORTING STRUCTURE IN A MANNER THAT PROVIDES FOR A CONTROLLED AFT BREAKAWAY IN THE EVENT OF A CRASH LANDING. THIS FEATURE ASSURES THAT NO CONTACT IS MADE WITH ANY FUEL TANKS OR LINES WHENEVER SUFFICIENT FORCE IS APPLIED TO THE GEAR TO CAUSE IT TO BREAKAWAY FROM THE AIRPLANE STRUCTURE.

IN THE CASE OF MAIN LANDING GEAR BREAKAWAY, THE FAILURE SEQUENCE IS FIRST THE FORWARD TRUNNION, NEXT THE SIDE BRACE, AND LAST THE AFT TRUNNION. BREAKAWAY OCCURS UNDER THE ACTION OF A DRAG LOAD APPLIED AT THE GEAR AXLE SUFFICIENT TO PRODUCE FAILURE WHEN COMBINED WITH A LIMIT VERTICAL LOAD.

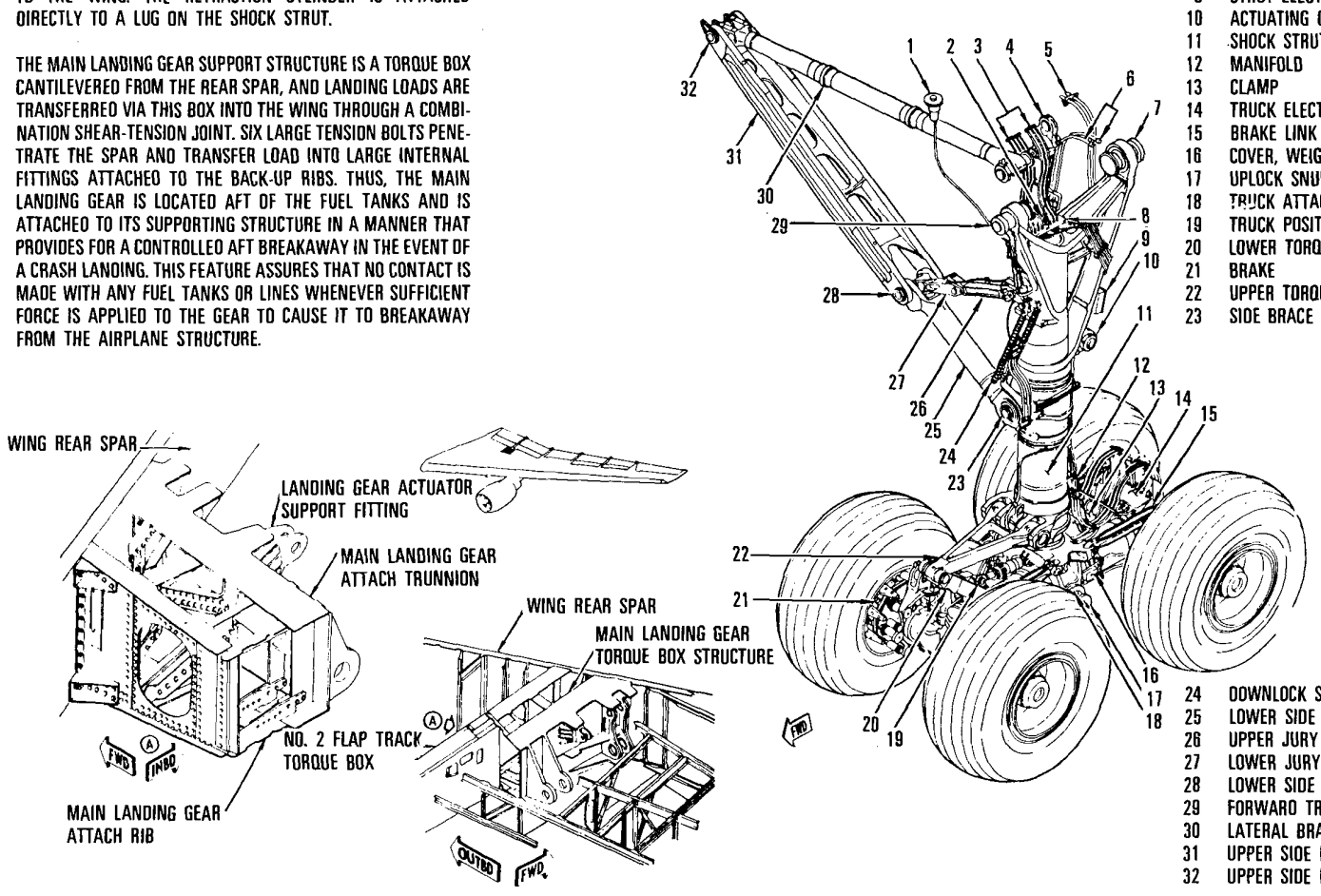

1 MECHANICAL DOWNLOCK INDICATOR
2 AIR VALVE
3 PLUMBING TO WING (REF)
4 RETRACTION ACTUATOR
5 CONDUIT TO WING (REF)
6 PLUMBING TO WING (REF)
7 AFT TRUNNION PIN
8 PLUMBING SUPPORT BRACKET
9 STRUT ELECTRICAL J BOX
10 ACTUATING CYLINDER PIN
11 SHOCK STRUT
12 MANIFOLD
13 CLAMP
14 TRUCK ELECTRICAL J BOX
15 BRAKE LINK
16 COVER, WEIGHT AND BALANCE SENSOR
17 UPLOCK SNUBBER
18 TRUCK ATTACHMENT PIN
19 TRUCK POSITIONER
20 LOWER TORQUE ARM
21 BRAKE
22 UPPER TORQUE ARM
23 SIDE BRACE NUT
24 DOWNLOCK SPRING (2 PLACES)
25 LOWER SIDE BRACE
26 UPPER JURY BRACE
27 LOWER JURY BRACE
28 LOWER SIDE BRACE PIN
29 FORWARD TRUNNION PIN
30 LATERAL BRACE
31 UPPER SIDE BRACE
32 UPPER SIDE BRACE PIN

Figure 6-2. Main Landing Gear Components

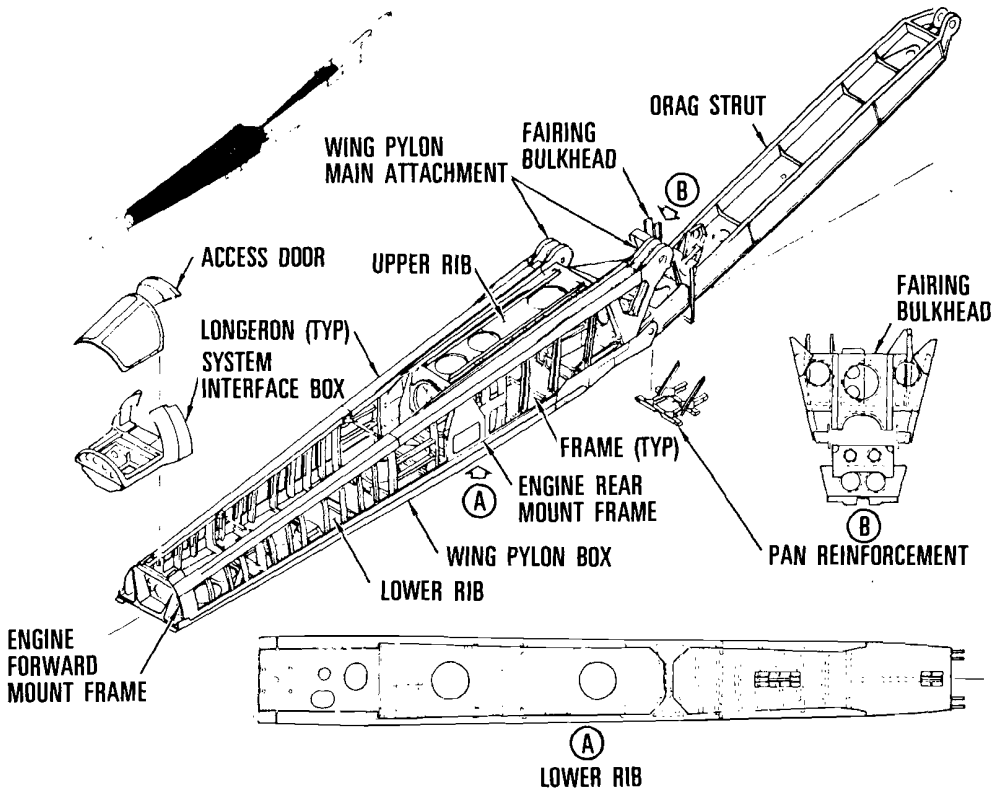

Figure 6-3. Engine Wing/Pylon Design

ENGINE BREAKAWAY PROVISIONS

THE PYLON BREAKAWAY FORCES FOR A WHEELS-UP LANDING CASE AND FOR LOSS OF FAN BLADE MATERIAL DURING FLIGHT, AND ALSO THE WING-PYLON INTERFACE LOADS AT THE ATTACHMENT POINT ARE USED FOR THE LOCAL BACKUP STRUCTURE OF THE PYLON. A 15% MARGIN IS MAINTAINED IN FITTINGS AND FASTENERS.

IN ADDITION, THE WING BOX STRUCTURE HAS STRENGTH ADEQUATE TO PREVENT FUEL TANK RUPTURE FOR THE WHEELS-UP LANDING CASE.

THE WING ENGINE PYLON EXTENDS FROM THE WING BOX STRUCTURE TO THE ENGINE FORWARD FAN CASE MOUNT, AND TRANSMITS ENGINE LOADS TO THE WING BOX BEAM THROUGH THE PYLON SUPPORT STRUCTURE OF THE WING. THE TITANIUM PYLON TORQUE BOX ASSEMBLY CONSISTS OF FOUR LONGERONS CONNECTED BY SKINS AND THREE FORGED FRAMES, WHICH ARE LOCATED AT THE MAIN PYLON-TO-WING ATTACHMENT AND THE ENGINE FRONT AND REAR MOUNTS. THE SKINS ARE SUPPORTED BETWEEN THESE THREE FRAMES BY INTERMEDIATE TITANIUM SHEET METAL FORMERS AND MACHINED FRAMES. A FORGED CADMIUM-PLATED 4340 STEEL DRAG STRUT EXTENDS FROM THE AFT ATTACHMENT FITTING OF THE PYLON SUPPORT STRUCTURE TO THE LOWER AFT CORNER OF THE PYLON BOX.

A THREE POINT SUPPORT SYSTEM IS UTILIZED TO ATTACH THE ENGINE PYLON TO THE AIRFRAME. THE PYLON IS JOINED TO THE WING BY TWO BOLTS AT THE MAIN PYLON-TO-WING ATTACHMENT FITTINGS AND ONE BOLT AT THE AFT FITTING OF THE DRAG STRUT. THE TWO FORWARD SUPPORT FITTINGS ARE MOUNTED ON THE WING FRONT SPAR AND ARE FABRICATED FROM 6A ℓ -4V TITANIUM FORGINGS. THE FITTINGS ARE 18.5 INCHES CENTER-TO-CENTER, SYMMETRICAL ABOUT THE CENTERLINE OF THE PYLON. THE AFT SUPPORT FITTING, ALSO TITANIUM, IS ATTACHED TO THE WING BOX LOWER SURFACE ALONG THE PYLON CENTERLINE, AND IS APPROXIMATELY 119 INCHES AFT OF THE FORWARD INBOARD FITTING. TWO LARGE I-SECTION BEAMS SPAN THE FORWARD AND AFT FITTINGS. THEY ARE ATTACHED TO THE WING LOWER SURFACE, AND TOGETHER WITH THE WING BOX SKIN, SERVE AS THE UPPER MEMBER OF THE PYLON. THE FORWARD INBOARD FITTING IS DESIGNED TO ACCEPT ALL OF THE SIDE LOADS WHILE THE OTHER LOADINGS ARE DISTRIBUTED THROUGH ALL OF THE SUPPORT STRUCTURE. THE ENGINE IS ATTACHED TO THE PYLON BY EIGHT BOLTS AND TWO SHEAR PINS, A METHOD OF ATTACHMENT WHICH PERMITS REMOVAL OF THE ENGINE AND ITS MOUNTS WITHOUT DISCONNECTING THE MOUNTING LINKS FROM THE ENGINE.

Table 6-5 shows areas where improvements provide the potential for reducing the post-crash fire hazard for fuselage fuel tanks. A brief discussion of this assessment is provided:

1. Location of fuel tanks and components -

   The fuselage fuel tank crash environment differs somewhat from that of the wing fuel tank. Analyses have shown that during air-to-ground impacts with initial sink velocities in excess of 22 ft/sec at a flat (zero-degree) pitch attitude there is the likelihood that the fuselage shell will break due to shear and/or bending moments exceeding the design strength. Similarly, the analyses results indicate fuselage underside crushing of 14 in. to 24 in. from the forward to aft locations. Additional preliminary analyses have also indicated that slope impacts as the airplane traverses the terrain having lost its main and nose landing gears could produce fuselage failure loads for effective normal velocities (ENV, forward velocity times the sine of slope angle) in excess of 20 ft/sec for inclines of 8 degrees or greater. The accident data suggest that during the post-impact slide-out phase 6.3% of the onboard occupants were fatalities at relatively low forward velocities, 57 knts (96 ft/sec), average into an obstacle. The percentage ratio increases to 77.8 at an average velocity of 136 knts (229 ft/sec). Major breaks will occur as anticipated at hard points and production breaks.

   The design of fuselage fuel tank installations should take into account vulnerable areas such as where breaks occur and where substantial crush is anticipated. Loss of underside structure could expose fuel tanks and components to obstructions such as jagged rocks and terrain. However, if the tanks are located at substantial distances above the ground line, this problem should be minimized. The crash impact loads, dynamic and/or static equivalents should be applied in the design of the tank system and installation. The U.S. Army Crash Survival Design Guide, which addresses fuselage fuel tank systems mostly, provides some guidelines in this respect. The SAFER committee concluded in 1979 that the installation of CRFS in fuselage cargo compartments was feasible.

2. System Approach -

   Accident data show that fuselage lower surface tear occurred in at least 57 accidents and that 17.5% of onboard occupants were fatalities. These data, along with fuselage breakup accident and analyses results, indicate that fuel tanks located in the fuselage contour are exposed to significant crash forces in a large number of accidents. While the environment for wing tanks may be more severe in some respects, minimization of fuel flow from fuselage tanks is important.

TABLE 6-5. ASSESSMENT - FUSELAGE FUEL TANK DESIGN FOR POST-CRASH FIRE HAZARD REDUCTION

POTENTIAL AREAS FOR IMPROVEMENT	SUPPORTING ACCIDENT DATA	CONCEPTUAL DESIGN CONSIDERATIONS
1. LOCATION OF FUEL TANKS AND COMPONENTS	REF. 1 DATA: FUSELAGE BREAKS DURING GROUND SLIDE IS RELATED TO AIRCRAFT SPEED; SLIGHT BREAK V_{avg} = 57 knts, 6.3% ONBOARD FATALITIES OPEN BREAK V_{avg} = 83 knts, 29.4% ONBOARD FATALITIES TORN FUSE. V_{avg} = 136 knts, 77.8% ONBOARD FATALITIES REF. 3 DATA: MAJOR FUSELAGE BREAKS OCCUR AT ONE OR MORE LOCATIONS; AFT OF COCKPIT, WING LE, WING TE, FWD OF EMPENNAGE	DESIGN TO: • WITHSTAND CRASH LOADS • PROVIDE SAFE CRUSH DISTANCE • AVOID HIGH POTENTIAL FAILURE LOCATIONS • AVOID PENETRATION LOADS
2. SYSTEMS APPROACH TO REDUCE POST-IMPACT FUEL FLOW	REF. 1 DATA: FUSELAGE LOWER SURFACE TEAR; 57 AIRCRAFT - 17 FATAL 17.5% ONBOARD 7 PROBABLE - 3 FATAL, 45.8% ONBOARD • EXTENSIVE RUPTURE; 28 ACCIDENTS - 15 FIRES/9 FATAL • MODERATE RUPTURE; 25 ACCIDENTS - 10 FIRES/3 FATAL	MINIMIZATION OF FUEL FLOW HAZARD: • BLADDER IMPACT RESISTANT TANKS IN CONJUNCTION WITH DEDICATED SUPPORT SUBSTRUCTURE • BREAKAWAY AND/OR SHUTOFF VALVES • FLEXIBLE LINES • SELF-SEALING FITTINGS/ATTACHMENTS • DESIGN DETAILS; LINE ROUTING, DEFORMATION, AVOID PERTURBANCES, SHAPES • FRANGIBLE FITTINGS

Some current transport category aircraft have fuel tanks located within the pressurized area, typically the cargo compartment. Particular attention is paid to these designs to minimize the risk of fuel spillage. A typical design, shown in figure 5-11, may be supported from the floor beams. Tanks located within the body contour are designed to meet load prescribed for emergency landing FAR25.561 and 25.963, described below:

- FAR25.561 "G" Loads

Forward	9.0g
Downward	4.5g
Upward	2.0g
Sideward	1.5g

BCAR Loads*

Forward	9.0g
Downward	4.5g
Upward	4.5g
Sideward	2.25g
Rearward	1.5g

*All combinations of inertia forces

- FAR25.963

  Fuel tanks within the fuselage contour must be able to resist rupture and to retain fuel under the inertia forces prescribed for the emergency landing condition in P25.561. In addition, these tanks must be in a protected position so that exposure of the tanks to scraping action along the ground is unlikely.

The incorporation of CRFS in fuselage contours is within the state-of-the-art. In some instances design features, as prescribed by the U.S. Army Survival Design Guide, may be applied to current aircraft. These designs, in light of recent accident and analyses data, should be evaluated. The definition of the crash environment parameter is important in order to assess the adequacy of designs.

6.3 COMPARISON OF DESIGN REQUIREMENTS AND CURRENT PROCEDURES

The fuel containment requirements, as suggested by the U.S. Army Crash Survival Design Guide, are compared with current transport airplane requirements and contemporary design practices in table 6-6. Table 6-6 contains 5 columns. Column No. 1 describes the item to be considered (e.g.,

TABLE 6-6. COMPARISON OF FUEL CONTAINMENT REQUIREMENTS AND TRANSPORT AIRPLANE DESIGN PRACTICES

CONSIDERATION	U.S. ARMY CRASH SURVIVAL DESIGN GUIDE – RECOMMENDED FEATURES	FAR 25, 121 AND BCAR REGULATIONS	ADVISORY CIRCULAR – AUXILIARY FUEL SYSTEM INSTALLATION	TRANSPORT CATEGORY AIRPLANE MANUFACTURERS
1. FUEL TANKS A. LOCATION	a) INCREASE DISTANCES BETWEEN OCCUPANTS AND FUEL SUPPLY AND IGNITION SOURCE	FAR 121.229(c) FAR 25.863	SUFFICIENT VEHICLE STRUCTURAL CRUSH DISTANCE SHOULD BE AVAILABLE TO AVOID AUXILIARY FUEL TANK GROUND CONTACT UNDER THE LOADING CONDITIONS OF 25.561(b). COMPLIANCE MAY BE SHOWN BY ANALYSIS AND WHERE NECESSARY BY TEST. THE ANALYSIS SHOULD IDENTIFY THE FAILURE MODE AND DEFINE THE INTERACTION BETWEEN THE TANK AND ADJACENT STRUCTURE AND BETWEEN ADJACENT TANKS. KEEL STRUCTURE THAT IS ADEQUATE FOR TANK LOAD DISTRIBUTION AND PROTECTION AGAINST RUPTURE IN CRASH LANDING SHOULD BE PROVIDED FOR ALL TANKS. CONSIDERATION SHOULD BE GIVEN TO ECCENTRICITIES INTRODUCED INTO THE BASIC AIRFRAME FROM FUEL TANK ATTACHMENTS.	• TANKAGE IS LOCATED IN THE WING BOX BETWEEN SPARS AND THEREBY ISOLATED FROM • IGNITION SOURCES • TANKAGE IS LOCATED IN CENTER WING SECTION • FLUX, TANKAGE IS LOCATED IN CARGO COMPARTMENT
	b) AVOID RUPTURE DUE TO LANDING GEAR PENETRATION	FAR 25.721 BCAR D5-2, 2.8.1(a) L1011 SPECIAL AIRFRAME CONDITION		• FUEL TANKS ARE LOCATED FORWARD OF THE MAIN LG • BODY TANKS LOCATED AWAY FROM PATH OF COLLAPSING LANDING GEAR. L.G. FAILURE MODES DESIGNED TO MINIMIZE POSSIBILITY OF TANK DAMAGE • LANDING GEAR IS DESIGNED TO BREAK AWAY
	c) LOCATE AWAY FROM GROUND CONTACT IN CRASH SEQUENCE AND THUS REDUCE EXPOSURE TO ROCKS, STUMPS AND OTHER IRREGULARITIES	FAR 25.963(d) BCAR D5-2, 2.8.1 (a)		• THE LOWER FUSELAGE (BENEATH THE WING) HAS A STRONG KEELSON WHICH PROVIDES CRUSH PROTECTION • THERE IS CRUSH PROTECTION FORWARD OF THE FRONT SPAR • FUEL SYSTEM COMPONENTS LOCATED ABOVE MAJOR AIRPLANE LOAD STRUCTURES
	d) LOCATE WING TANKS AS FAR OUTBOARD AS POSSIBLE BUT NOT AT TIP	BCAR D5-2, 1.2	NOT APPLICABLE	• WING FUEL DISTRIBUTION DICTATED BY RESTRAINTS OF WING LOADING, ENGINE LOCATIONS AND FUEL QUANTITY REQUIREMENTS • TO MEET LIGHTNING REQUIREMENTS FOR VENT BOX, FUEL NOT LOCATED AT TIP
	e) AVOID LOCATING IN AREAS WHERE CONSIDERABLE STRUCTURE COLLAPSE CAN OCCUR AND TANKS ARE SUBJECT TO PRESSURES THAT EXCEED DESIGN LIMITS OR EXPOSED TO TORN AND JAGGED METAL	BCAR D5-2, 1.3	SAME AS 1A(a)-(c) SAME AS 2B(b)	• CRUSH DISTANCE IS PROVIDED BEFORE FUSELAGE TANK BOUNDARY IS IN CONTACT WITH GROUND • WING TANKS ARE INTEGRAL WITH MAJOR AIRPLANE STRUCTURES (SPARS) • FOR BLADDER TANK, STRUCTURE IS DESIGNED TO AVOID TANK PENETRATION
	f) AVOID SHARP CUTTING CORNERS, PENETRATING SPARS AND LONGERONS	FAR 25.963 FAR 25.967	SAME AS 2B(b)	• WHERE BLADDER TANKS ARE USED, SHARP CUTTING CORNERS, PENETRATING SPARS AND LONGERONS ARE AVOIDED
B. SHAPE	a) CYLINDRICAL OR RECTANGULAR SHAPE IS BEST	FAR 25.967(a)(4)	CONTOURED TO FUSELAGE AREA IN CARGO BAY.	• DIFFICULT SHAPE FOR WING TANKS. INTEGRAL WING TANK SHAPE DICTATED BY SPAR LOCATIONS AND WING CONTOURS • AUXILIARY FUSELAGE FUEL TANK ADHERES TO DESIRED SHAPE, IN CARGO AREA AS SPACE PERMITS.
	b) AVOID PROTURBANCES AND INTERCONNECTING CELLS, MOST VULNERABLE TO RUPTURE	FAR 25.967(a)(4)	FOR COMPONENTS WHICH MUST BE LOCATED INSIDE THE FUEL TANKS, THE CRASHWORTHINESS ASPECTS OF THE INSTALLATION SHOULD BE CONSIDERED. MEANS TO PREVENT COMPONENT SHARP EDGES FROM PENETRATING THE TANK SURFACE DUE TO DEFLECTION OF THE SURFACE UNDER CRASH LOAD CONDITIONS SHOULD BE PROVIDED, ESPECIALLY WHERE FLEXIBLE TANK BLADDER CELLS ARE USED.	• TANK INTERCONNECTS ARE WITHIN THE WING BOX • AVOID PROTURBANCES AND INTERCONNECTING CELLS MOST VULNERABLE TO RUPTURE IN DESIGN CONSIDERATIONS FOR FUSELAGE AUXILIARY TANKS AND WING BLADDER TANKS
	c) IF TANKS DEVIATE GREATLY FROM REGULAR CYLINDRICAL OR PARALLELEPIPED SHAPES, CONSIDERATION SHOULD BE GIVEN TO USE OF SEPARATE TANKS AND INTERCONNECTING SELF-SEALING FITTINGS			• NOT APPLICABLE TO WING TANKS. WING TANKS DO NOT DIFFER GREATLY FROM PARALLEL PIPED SHAPES
	d) TO MINIMIZE SNAGGING AND EXCESSIVE CONCENTRATION OF STRESSES, INSIDE ANGLES SHOULD BE AVOIDED	FAR 25.967(a)(4) BCAR D5-2, 4.3.5		• NO TANK LINERS EMPLOYED • INSIDE ANGLES ARE AVOIDED WHERE POSSIBLE

TABLE 6-6. COMPARISON OF FUEL CONTAINMENT REQUIREMENTS AND TRANSPORT AIRPLANE DESIGN PRACTICES (CONT'D)

CONSIDERATION	U.S. ARMY CRASH SURVIVAL DESIGN GUIDE – RECOMMENDED FEATURES	FAR 25, 121 AND BCAR REGULATIONS	ADVISORY CIRCULAR – AUXILIARY FUEL SYSTEM INSTALLATION	TRANSPORT CATEGORY AIRPLANE MANUFACTURERS
B. SHAPE (Cont'd.)	e) ALL OUTSIDE ANGLES SHOULD HAVE A RADIUS ≥ 1 INCH		• NOT STATED	• NOT APPLICABLE TO INTEGRAL WING TANKS
	f) TANKS SHOULD BE ORIENTED SO THAT THE SIDE WITH THE GREATEST SURFACE AREA IS FACING THE DIRECTION OF PROBABLE IMPACT		• NOT STATED	• NOT APPLICABLE TO INTEGRAL WING TANKS • AUXILIARY FUEL TANKS PLACED IN CARGO AREA TO CONFORM TO AVAILABLE SPACE
C. MATERIALS	a) POSSESS HIGH DEGREE OF CUT AND TEAR RESISTANCE, MODERATE ELONGATION – MIL-T-27422B REQUIREMENTS	FAR 25.963(b)	TANK MATERIAL SHOULD PROVIDE RESILIENCE AND FLEXIBILITY OR, IN ABSENCE OF THESE CHARACTERISTICS, INSTALLATION SHOULD PROVIDE CLEARANCE FROM STRUCTURE. IF LIGHTWEIGHT COMPOSITE STRUCTURE WITH BRITTLE FAILURE IS USED, COMPLIANCE WITH CURRENT REGULATIONS ON SPECIAL CONDITIONS MAY BE REQ'D	• NO TANK LINER USED • FUEL HOSE REQUIREMENTS SAME OR EQUIVALENT TO MIL-T-27422B
	b) EXHIBIT CRASH IMPACT RESISTANCE PER MIL-T-27422B (65 FT. HEIGHT DROP TEST)	FAR 25.963(d) FAR 25.561		• DESIGN FOR FAA AND CAA REQUIREMENTS, WHEN USING BLADDER CELLS
	c) DESIGN FOR TANK FITTING TO PULL FREE OF AIRFRAME STRUCTURE RATHER THAN OUT OF TANK		SEE COMMENT FOR 1E	• BREAKAWAY FUELING ADAPTER • DESIGN FOR TANK FITTING TO PULL FREE OF AIRFRAME RATHER THAN OUT OF TANK
D. FITTINGS	a) USE HIGH STRENGTH INSERT-RETENTION METHODS (~80% OF FUEL CELL WALL STRENGTH)		SEE COMMENTS FOR 1E	• DESIGN FOR FAA/CAA REQUIREMENTS
E. ATTACHMENTS	a) SECURE FUEL TANK TO AIRFRAME AND CONNECTING PLUMBING IN A WAY THAT ALLOWS TANK TO PULL FREE OF THE ATTACHMENTS WITHOUT RUPTURING WHEN STRUCTURAL DISPLACEMENT OCCURS IN A CRASH.	FAR 25.993(b) AND (f)	(1) ATTACHMENT POINT LOADS SHOULD BE EVENLY DISTRIBUTED TO MINIMIZE THE POSSIBILITY OF FUEL TANK RUPTURE. (2) IN THE EVENT OF AN OVERLOAD CONDITION, THE FAILURE SHOULD OCCUR AT SOME POINT BETWEEN THE TANK ATTACH FITTING AND THE BASIC AIRFRAME AND FLOOR STRUCTURE TO MINIMIZE POTENTIAL BODY TANK RUPTURE. WHERE POSSIBLE, FAILURE OF THE TANK SUPPORT SHOULD NOT INDUCE FAILURE OF THE FUEL LINES FOR THE MAXIMUM TANK DISPLACEMENT THAT COULD OCCUR. IT MAY BE NECESSARY TO INCORPORATE REDUNDANT SUPPORTS OR SECONDARY CONSTRAINT BULKHEADS IN THIS REGARD	• NO LINER USED • HOSES WITH DEMONSTRATED 50% STRETCH CAPABILITY EMPLOYED BETWEEN TANKS AND ENGINE FEED LINES • SIMILAR BREAKAWAY FEATURES ARE INCLUDED IN FUSELAGE MOUNTED AUXILIARY TANKS
	b) USE FRANGIBLE BRACKETS OR BOLTS TO ENSURE SEPARATION AT SPECIFIED LOADS – EITHER FAIL MATERIAL OR SOME FACET OF THE DESIGN MUST MEET OPERATIONAL AND SERVICE LOADS WITH MARGIN (APPROX. FACTOR OF 10), BUT FAIL AT 25% TO 50% OF MINIMUM LOAD REQUIRED TO FAIL THE ATTACHED SYSTEM OR COMPONENT		ALL TANK FUEL LINE TO AIRPLANE STRUCTURE ATTACHMENTS SHOULD BE EVALUATED FOR THE FLIGHT, FLIGHT VIBRATION AND CRASH LOADS WHICH MAY BE TRANSMITTED TO THE TANK WALLS. FROM THE CRASHWORTHINESS STANDPOINT, TO PREVENT FUEL TANK FITTINGS FROM BEING TORN OUT OF THE TANK WALL, IT MAY BE ADVISABLE TO CONSIDER THE NEED FOR FRANGIBLE DISCONNECT VALVES OR FITTINGS, MOUNTED ON THE EXTERNAL SURFACE OF THE TANK, WHICH SEPARATE AND SHUT OFF ANY HAZARDOUS FUEL FLOW FROM THE TANK IN EVENT OF A CRASH. HOWEVER, A FAILURE ANALYSIS MUST SHOW THAT INADVERTENT CLOSURE OF THESE FRANGIBLE FITTINGS WILL NOT INTERFERE WITH CONTINUED SAFE FLIGHT	• SIMILAR BREAKAWAY FEATURES ARE INCLUDED IN FUSELAGE MOUNTED AUXILIARY TANKS
	c) FRANGIBLE ATTACHMENTS SHOULD BE DESIGNED TO SEPARATE EFFICIENTLY IN THE DIRECTION OF FORCE MOST LIKELY TO OCCUR DURING A CRASH IMPACT			
2. FUEL LINES A. CONSTRUCTION	a) AVOID CUTTING OF LINES BY SURROUNDING STRUCTURE OR BEING WORN THROUGH BY RUBBING AGAINST ROUGH SURFACES	FAR 25.993	SEE COMMENTS FOR 2B(b)	• FUSELAGE ENGINE FEED HOSE ROUTED THROUGH SMOOTH SHROUD IN CABIN FLOOR WITH SUPPORT GUIDES • DESIGN TO WITHSTAND IMPACT OF CUTTING SURFACE AND DESIGNATED DEFLECTION WITH NO LEAKAGE

TABLE 6-6. COMPARISON OF FUEL CONTAINMENT REQUIREMENTS AND TRANSPORT AIRPLANE DESIGN PRACTICES (CONT'D)

CONSIDERATION	U.S. ARMY CRASH SURVIVAL DESIGN GUIDE – RECOMMENDED FEATURES	FAR 25, 121 AND BCAR REGULATIONS	ADVISORY CIRCULAR – AUXILIARY FUEL SYSTEM INSTALLATION	TRANSPORT CATEGORY AIRPLANE MANUFACTURERS
A. CONSTRUCTION (Cont'd.)	b) USE FLEXIBLE HOSE ARMORED WITH A STEEL BRAIDED HARNESS IN VULNERABLE AREAS	FAR 25.993(d)	SEE COMMENTS FOR 2B	• USE FLEXIBLE HOSE ARMORED WITH STEEL BRAIDED HARNESS IN VULNERABLE AREAS (OR EQUIVALENT)
	c) IF BREAKAWAY VALVES NOT PROVIDED, HOSES 20% TO 30% LONGER THAN MINIMUM ARE TO BE USED	FAR 25.993(f)	SEE COMMENTS FOR 2B	• USE 50% STRETCH HOSES IN LIEU OF EXCESS NOMINAL LENGTH • DESIGN HOSES TO BE FLEXIBLE ENOUGH TO ALLOW A REASONABLE DEGREE OF DEFORMATION AND STRETCHING WITHOUT LEAKAGE
	d) FITTINGS ARE TO MEET STRENGTH REQUIREMENTS	FAR 25.993(d)		• FITTINGS DESIGNED TO REQUIRED SPECIFICATION FOR APPLICATION
	e) ALL FUEL LINES SHOULD BE SECURED WITH BREAK-AWAY (FRANGIBLE) ATTACHMENT CLIPS FOR AREAS OF ANTICIPATED STRUCTURAL DEFORMATION			• SUPPORT CLIPS ARE WEAKER THAN PLUMBING LINES, GENERALLY • AVOID ROUTING OF FUEL LINES IN AREAS OF ANTICIPATED STRUCTURAL DEFORMATION • SELECTED USE OF QUICK DISCONNECTS IN VULNERABLE AREAS
	f) WHEN FUEL LINES PASS THROUGH AREAS WHERE EXTENSIVE DISPLACEMENT OR COMPLETE SEPARATION IS ANTICIPATED, SELF-SEALING BREAKAWAY VALVES SHOULD BE USED. BREAKAWAY VALVES MUST MEET ALL OPERATIONAL AND SERVICE LOADS WITH SATIS-FACTORY MARGIN AND SEPARATE BETWEEN 25% AND 50% MINIMUM FAILURE LOAD		SEE COMMENTS FOR 1E(b)(c)	• USE OF STRETCH HOSE • AVOID ROUTING OF FUEL LINES IN AREAS OF ANTICIPATED STRUCTURAL DEFORMATION
	g) SYSTEMS WITH LINE-TO-LINE BREAKAWAY VALVES SHOULD CONSIDER POTENTIAL HAZARDS TO CROSS-AXIS SHEAR LOADING ON THE VALVE HALVES. IF POSSIBLE, USE OMNIDIRECTIONAL VALVES		SEE COMMENTS FOR 1E(b)(c) AND 2B	• SYSTEMS WITH LINE-TO-LINE BREAKAWAY VALVES SHOULD CONSIDER POTENTIAL HAZARDS TO CROSS-OVER AXIS SHEAR LOADING ON VALVE HALVES, AND USE UNIDIRECTIONAL VALVES, WHERE POSSIBLE
B. ROUTING	a) ROUTE ALONG HEAVIER STRUCTURAL MEMBERS	FAR 25.993(f)	CONSIDER THE CRASHWORTHINESS CHARACTERISTICS OF THE LINE ROUTING. WHERE POSSIBLE, INTERCONNECT TANKS, RIGID METAL LINES AND OTHER MAJOR FUEL SYSTEM COMPONENTS WITH FLEXIBLE LINES. ALLOW SUFFICIENT FLEXIBLE LINE LENGTH TO PERMIT SOME SHIFTING OF THE COMPONENTS WITHOUT BREAKING THE LINES OR CONNECTIONS. THE FLEXIBILITY OF THE ENTIRE FUSELAGE AUXILIARY FUEL LINE ROUTING SHOULD BE SUFFICIENT TO ACCOUNT FOR FUSELAGE BREAK POINTS. IF LINES ARE ROUTED NEAR STRUCTURAL MEMBERS, THE EFFECT OF "GUILLOTINE" OR SLASHING ACTION DUE TO A CRASH LANDING SHOULD BE ADDRESSED. WHEN ROUTING FUEL LINES THROUGH CABIN FLOOR STRUCTURAL LIGHTENING HOLES IS NECESSARY, PROVIDE SUFFICIENT CLEARANCE TO PREVENT LINE SEVERING DUE TO FLOOR DEFORMATIONS ON A CRASH LANDING. A CRASHWORTHINESS EVALUATION REPORT OF THE AUXILIARY FUEL SYSTEM INSTALLATION SHOULD BE SUBMITTED DURING CERTIFICATION WHICH SHOWS, BY ANALYSIS OR TEST, THAT PRECAUTIONS HAVE BEEN TAKEN TO MINIMIZE THE HAZARDS DUE A SURVIVABLE CRASH ENVIRONMENT	• PLUMBING ROUTED IN FLOOR STRUCTURE AND ABOVE HORIZONTAL TAIL BOX BEAM • FUSELAGE FUEL LINE PROTECTED BY STRETCH HOSE • ROUTE ALONG HEAVIER STRUCTURAL MEMBERS • USE OF PROTECTIVE MEASURES IN AREAS OF ANTICIPATED FAILURES
	b) PROVIDE SPACE INTO WHICH HOSE CAN DEFORM			
	c) IF DESIGN REQUIREMENTS LIMIT THE USE OF PRO-TECTIVE MEASURES, FULL USE SHOULD BE MADE OF SELF-SEALING BREAKAWAY COUPLINGS LOCATED IN AREAS OF ANTICIPATED FAILURES			

TABLE 6-6. COMPARISON OF FUEL CONTAINMENT REQUIREMENTS AND TRANSPORT AIRPLANE DESIGN PRACTICES (CONT'D)

CONSIDERATION	U.S. ARMY CRASH SURVIVAL DESIGN GUIDE – RECOMMENDED FEATURES	FAR 25, 121 AND BCAR REGULATIONS	ADVISORY CIRCULAR – AUXILIARY FUEL SYSTEM INSTALLATION	TRANSPORT CATEGORY AIRPLANE MANUFACTURERS
B. ROUTING (Cont'd.)	d) SPACE AND FLEXIBILITY SHOULD BE PROVIDED AT THE CROSS-OVER CONNECTION, DRAINS AND OUTLET LINES IF THEY ARE VULNERABLE TO IMPACT DAMAGE		SEE COMMENTS FOR 2B(a)(b)(c)	• AVOID LOCATING FUEL LINES IN AREAS VULNERABLE TO IMPACT DAMAGE
	e) CONSIDERATION SHOULD BE GIVEN TO USING SELF-SEALING BREAKAWAY FITTINGS AT EACH LINE-TO-TANK ATTACHMENT POINT			• NOT USED FOR INTEGRAL WING TANKS
3. SUPPORTIVE COMPONENTS A. SELF-SEALING BREAKAWAY VALVES	a) DESIGN TO SEPARATE INTO TWO OR MORE SECTIONS AND SEAL THE OPEN ENDS OF DESIGNATED FLUID-CARRYING PASSAGES. OPENINGS MAY BE IN FUEL/OIL LINES, TANKS, PUMPS, FITTINGS; USE OF "ONE-SHOT" OR QUICK DISCONNECT TYPES		SEE COMMENTS FOR 1E	• USED IN SAME AIRCRAFT
	b) DESIRED LOCATIONS: • FUEL-CARRYING TANK OUTLET • FUEL LINE NETWORK WHERE EXTENSIVE DISPLACEMENT IS FORECAST, i.e. WING ROOT, ENGINE COMPARTMENT • CONNECTION BETWEEN TWO FUEL CELLS IN DIRECT SIDE-BY-SIDE ARRANGEMENT		SEE COMMENT FOR 1E	• SPECIFIC DESIGN DICTATES REQUIREMENTS
	c) RECESS TANK TO LINE INTERCONNECT VALVES SUFFICIENTLY INTO THE TANK, SO THAT THE TANK HALF IS FLUSH WITH TANK WALL OR PROTRUDES ONLY A MINIMAL DISTANCE BEYOND THE TANK WALL AFTER SEPARATION			• VALVES ARE INSIDE THE TANK ESSENTIALLY FLUSH MOUNTED IN SPARS (ADS-19) • NOT COMMON PRACTICE
	d) FRANGIBLE INTERCONNECTING MEMBER OF VALVES SHOULD MEET ALL OPERATIONAL AND SERVICE LOADS WITH REASONABLE MARGIN BUT SEPARATE AT 25% TO 50% OF THE MINIMUM FAILURE LOAD		SEE COMMENTS FOR 1E	• SPECIFIC DESIGN DICTATES REQUIREMENTS
B. VENTS	a) AVOID DRAIN OUT OF THE FLUID WHEN AIRCRAFT ROLLS TO ONE SIDE	FAR 25.975(a)(2)	ALL VENT AND FUEL FITTING AND CONNECTIONS IN A PASSENGER OR CARGO COMPARTMENT SHOULD BE SHROUDED. ALL FITTINGS CONNECTED TO AND THROUGH THE TANK WALLS SHOULD BE PROVIDED WITH SECONDARY BARRIERS.	• VENT COLLECTOR BOX AND VENT LOCATIONS PRECLUDE OUTFLOW THROUGH VENTS • DRAIN OUT OF THE FLUID WHEN THE AIRCRAFT ROLLS TO ONE SIDE IS AVOIDED
	b) AVOID VENT LINE FAILURE AT POINT OF EXIT FROM THE TANK. USE SHORT HIGH-STRENGTH FITTINGS BETWEEN METAL INSERT IN THE TANK AND VENT LINE			• AVOID VENT LINE FAILURE AT POINT OF EXIT FROM THE TANK
	c) VENT LINE SHOULD BE OF WIRE-COVERED FLEX HOSE ROUTED TO AVOID SNAGS			• VENT LINE IS RIGID INSIDE TANK • WING TANK VENTS ARE INTEGRAL WITH STRUCTURES
	d) USE SIPHON BREAKS AND/OR U-SHAPED TRAPS IN VENT LINE ROUTING INSIDE THE FUEL TANK	CONTRARY TO FAR 25.975(a)(5)	WHERE TRAPS IN THE VENT SYSTEM ARE UNAVOIDABLE, DRAINS SHOULD BE INSTALLED. AVOID CREATING LOW POINTS IN ROUTING FUEL AND VENT LINES.	• SIPHON BREAKS USED IF DESIGN ACCEPTABLE

TABLE 6-6. COMPARISON OF FUEL CONTAINMENT REQUIREMENTS AND TRANSPORT AIRPLANE DESIGN PRACTICES (CONT'D)

CONSIDERATION	U.S. ARMY CRASH SURVIVAL DESIGN GUIDE – RECOMMENDED FEATURES	FAR 25, 121 AND BCAR REGULATIONS	ADVISORY CIRCULAR – AUXILIARY FUEL SYSTEM INSTALLATION	TRANSPORT CATEGORY AIRPLANE MANUFACTURERS
B. VENTS (Cont'd.)	e) ROUTE VENT LINE INSIDE FUEL TANK IS PREFERABLE. IF VENT LINES ARE PLACED INSIDE THE FUEL TANK THEY SHOULD BE DESIGNED TO OPERATE IN ANY ATTITUDE AND ALLOW A FREE FLOW OF AIR WHILE PROHIBITING A FLOW OF FUEL. THEY CAN BE USED IN LIEU OF ALTERNATE CONSIDERATIONS SUCH AS FLEXIBLE LINES OR BREAKAWAY VALVES			• VENT LINES ARE INSIDE FUEL TANK AND ALLOW FREE FLOW OF AIR • VENT LINES ROUTED INSIDE OF FUEL TANKS
	f) FUEL SYSTEMS THAT ARE PRESSURE REFUELED SHOULD USE A BYPASS SYSTEM FOR TANK OVERPRESSURIZATION ASSURE THAT SPILLAGE RESULTING FROM OVERPRESSURIZATION DUE TO TANK COMPRESSION DURING A CRASH IS RELEASED AWAY FROM AIRCRAFT OCCUPANTS AND IGNITION SOURCES	FAR 25.975(a)(3)(iii) FAR 25.975(a)(6)(ii)		• VENT LINES ARE SIZED TO PREVENT OVERPRESSURIZATION. VENT LINE DISCHARGED NEAR WING TIP • AUTOMATIC FUELING SHUTOFF VALVES PREVENT TANK OVERFILL AND OVERBOARD SPILLAGE. VENT SYSTEM VENTS OVERBOARD AT WING TIPS AND PREVENTS EXCESSIVE PRESSURE BUILDUP IN TANKS
C. BOOST PUMPS	a) FALL INTO TWO CATEGORIES: 1. TANK- OR LINE-MOUNTED TYPES WHICH PRESSURIZE THE FUEL LINES 2. LINE OR ENGINE MOUNTED TYPE WHICH SUCK FUEL FROM THE TANKS AND LINES, CREATING A SLIGHT NEGATIVE PRESSURE IN THE FUEL LINES THE LATTER POSES A LOWER THREAT FOR CRASH FIRES			• TANK MOUNTED PUMPS THAT PRESSURIZE LINES ARE USED MOST FREQUENTLY • FUEL SHUTOFF VALVE LOCATED AT TANK EXIT TO MINIMIZE FUEL SPILLAGE UNDER EMERGENCY CONDITIONS • PRACTICE ITEM 2., WHERE POSSIBLE ON SOME DESIGNS
	b) IF BOOST PUMPS ARE INSTALLED IN THE FUEL TANK, AIR-DRIVEN AS OPPOSED TO ELECTRICALLY DRIVEN IS DESIRABLE			• ELECTRIC FUEL PUMPS USED THROUGHOUT COMMERCIAL TRANSPORT FLEET WITH EXCELLENT SAFETY RECORD IF AIR DRIVEN PUMPS ARE CONSIDERED FOR MILITARY APPLICATION. CARE SHOULD BE TAKEN TO ASSURE NO AIR DISCHARGE INTO TANK • BOOST PUMPS ARE ELECTRICALLY DRIVEN BUT EXPLOSION PROOFED
	c) ATTACH PUMP RIGIDLY BOLTED TO FUEL CELL ONLY. IF SUPPORTED OR ATTACHED TO THE AIRCRAFT STRUCTURE, A FRANGIBLE ATTACHMENT SHOULD BE USED			• WING FUEL TANKS ARE INTEGRAL WITH AIRCRAFT STRUCTURE
D. FILLER NECKS	a) DESIGN FILLER CAP TO REMAIN WITH THE TANK BY MOUNTING IT AT OR SLIGHTLY BELOW THE TANK WALL SURFACE	FAR 25.973		• SAME AS U.S. ARMY RECOMMENDED FEATURE
	b) RECOMMEND AGAINST FILLER NECKS UNLESS FRANGIBLE TYPE IS USED			• A BREAKAWAY PRESSURE FUELING ADAPTER IS USED • FILLER NECKS NOT USED

TABLE 6-6. COMPARISON OF FUEL CONTAINMENT REQUIREMENTS AND TRANSPORT AIRPLANE DESIGN PRACTICES (CONT'D)

CONSIDERATION	U.S. ARMY CRASH SURVIVAL DESIGN GUIDE – RECOMMENDED FEATURES	FAR 25, 121 AND BCAR REGULATIONS	ADVISORY CIRCULAR – AUXILIARY FUEL SYSTEM INSTALLATION	TRANSPORT CATEGORY AIRPLANE MANUFACTURERS
E. QUANTITY SENSORS	a) AVOID RIGID ATTACHMENT BETWEEN THE SENSOR ENTRY INTO THE TANK AND THE AIRCRAFT STRUCTURE (MAKE PROBE MOUNTING ATTACHMENT FRANGIBLE OR USE FRANGIBLE STRUCTURE FOR THIS TYPE OF ATTACHMENT)		SEE COMMENT FOR 2B	• PROBE END IS NOT RIGIDLY ATTACHED TO THE WING TANK LOWER SURFACE
	b) AVOID PUNCTURING THE TANK BY THE LONG, RIGID, TUBULAR SENSING PROBES. (POSSIBLY MOUNT THE PROBE AT A LESS HAZARDOUS ANGLE OR USE CURVED, FRANGIBLE, LOW-FLEXURAL-RIGIDITY PROBES OR PROBES EQUIPPED WITH LOAD SPREADING SHOES, FUEL COUNTERS AND FLOAT-AND-ARM TYPE SENSORS		SEE COMMENTS FOR 2B	• NOT APPLICABLE FOR INTEGRAL WING TANKS • COMPLY FOR AUXILIARY FUEL TANKS
F. SUMP DRAINS	a) DESIGN FOR MAXIMUM DRAINAGE WITHOUT THE DRAIN PROTRUDING BEYOND THE FACE OF THE TANK	FAR 25.971	ALL SUMPS MUST HAVE PROVISIONS WHICH ALLOW FOR COMPLETE DRAINAGE. THE SHROUDED FITTING BETWEEN THE SUMP DRAIN AND THE OVERBOARD PENETRATION SHOULD PROVIDE A "FUSE" POINT TO ASSURE THAT UPWARD PENETRATION OF THE TANK DOES NOT OCCUR DURING A CRASH LANDING	• PUMP SURGE BOXES HAVE FLUSH SUMP DRAINS. IN CENTER SECTION TANK A FRANGIBLE EXTENSION IS USED • SAME AS U.S. ARMY RECOMMENDED FEATURE FOR WING TANKS • APPLICABLE FOR CENTER WING AND BODY TANKS
G. FUEL STRAINERS AND FILTERS	a) DO NOT LOCATE IN-LINE FUEL DRAINERS IN THE ENGINE COMPARTMENT		NOT APPLICABLE	• FINAL FUEL FILTER IN COMMERCIAL AIRCRAFT TYPICALLY IN ENGINE (FIRE ZONE) COMPARTMENT
	b) DO NOT MOUNT DIRECTLY ON ENGINE (ENGINE AFFORDS SOME PROTECTION BUT PROXIMITY TO THE HOT ENGINE SURFACES CREATES AN ADDITIONAL HAZARD FROM BALLISTIC HITS)		NOT APPLICABLE	• FINAL FUEL FILTER IN COMMERCIAL AIRCRAFT TYPICALLY IN ENGINE (FIRE ZONE) COMPARTMENT
	c) DESIGN FOR 3DG IN ANY DIRECTION	FAR 25.561	FAR 25.561	• ADHERE TO FAA/CAA REQUIREMENTS
	d) USE SELF-SEALING BREAKAWAY COUPLINGS TO ATTACH FUEL LINES TO THE FUEL STRAINERS	FAR 25.977(c)		• NOT STANDARD COMMERCIAL TRANSPORT PRACTICE
H. CAPS AND ACCESS COVERS	CAPS SHOULD HAVE A MINIMUM RATING OF 75 PSI			• DESIGN TO MEET FAA/CAA REQUIREMENTS
	ACCESS COVERS MUST BE CAPABLE OF CARRYING LOADS EQUAL TO OR GREATER THAN THOSE WHICH THE TANK CAN WITHSTAND			• THIS FEATURE IS SUBJECT TO NEW POTENTIAL REGULATORY ACTION AND IS UNRESOLVED AT THIS TIME

fuel tank, fuel lines, components). Column No. 2 presents a description of applicable recommended features as noted in the U.S. Army Crash Survival Design Guide. Column No. 3 defines applicable FAR25 and BCAR regulations. Column No. 4 contains a description of verbiage contained in the "Auxiliary Fuel System Installation Advisory Circular". The last column (No. 5) lists current design practices as surveyed from the three major domestic airplane manufacturers. The following observations are noted:

- The U.S. Army Survival Design Guide is oriented primarily for rotary-wing military aircraft where fuel tanks are contained in the fuselage and the emphasis is on crash-resistant fuel systems. These systems do impose weight and volume penalties. The fact that a feature is recommended by the U.S. Army does not assure that it is desirable or necessary.

- The FAR25, FAR121, and BCAR regulations rarely will address the items of consideration in the same manner as the U.S. Army Design Guide. However, many of the features that are described in the latter documentation are alluded to in the regulations.

- The advisory circular on auxiliary fuel system installation, in some respects, is more like the U.S. Army Design Guide since it is applicable to fuel tanks contained in the fuselage.

- The description of transport category airplane manufacturer contemporary design practices encompasses the three domestic manufacturers. It is difficult to make direct match-ups with U.S. Army recommended features because the three manufacturers a) do not design alike in all areas of concern, b) have variations in model sizes and configurations, c) have different design philosophies, and d) do not all have auxiliary fuselage (cargo area) tanks. Thus, the comments contained in Column No. 5 are not necessarily representative of all current design approaches, but rather a cross-section.

Table 6-7 shows a comparison of fuel system installation integrity considerations. Six areas of concern are compared. It appears that the transport category airplane regulations and requirements are more specific in this area than the U.S. Army Design Guide.

TABLE 6-7. COMPARISON OF FUEL SYSTEM INSTALLATION INTEGRITY CONSIDERATIONS

CONSIDERATION	U.S. ARMY CRASH SURVIVAL DESIGN GUIDE – RECOMMENDED FEATURES	FAR 25, 121 AND BCAR REGULATIONS	ADVISORY CIRCULAR – AUXILIARY FUEL SYSTEM INSTALLATION	TRANSPORT CATEGORY AIRPLANE MANUFACTURERS
A. ISOLATION FROM AIRFRAME INDUCED LOADS AND DEFORMATIONS	NOT STATED	FAR 25.963 FAR 25.965	THE TANK DESIGN SHOULD ISOLATE THE TANK FROM AIRFRAME INDUCED LOADS AND DEFORMATIONS INDUCED BY THE WING AND FUSELAGE.	• ACHIEVED BY DESIGN OF LOAD PATHS
B. SHOW BY ANALYSIS OR EQUIVALENT ENERGY ABSORPTION CAPABILITY	STATES THAT CONSIDERATION BE GIVEN TO A CRASH TEST WITH THE COMPLETE CRASHWORTHY FUEL SYSTEM IN ENDUGH OF THE AIRFRAME TO CREATE A REALISTIC SITUATION. RECOMMENDS A SET A OF DESIGN VELOCITY CHANGES.	FAR 25.561 FAR 25.963(D)	IN ADDITION TO THE REQ'TS OF FAR 25.963(D) REGARDING AUXILIARY FUEL TANK RETENTION, IT SHOULD BE SHOWN BY CRASHWORTHY ANALYSIS OR THE EQUIVALENT THAT THE AIRPLANES LOWER FUSELAGE AND AUXILIARY FUEL TANK SUPPORT STRUCTURE ARE CAPABLE OF ABSORBING THE ENERGY FOR THE CONDITION STATED IN FAR 25.561.	• SHOWN BY ANALYSIS OR EQUIVALENT
C. AVOID LOCATION AT FUSELAGE/BREAK SEPARATION POINT	NOT STATED – IMPLIED BY ITEMS 1A(a) THROUGH 1A(e)	NOT STATED	AVOID LOCATING TANKS AND SUPPORT STRUCTURE AT STRUCTURAL DISCONTINUITIES.	• ADHERE TO PROPER LOCATION OF TANKS
D. PROTECT FROM SHIFTING CARGO	NOT STATED	FAR 25.855	BARRIER SHOULD PREVENT ANY TYPE OF BULK CARGO, FROM PENETRATING COMPONENTS OF THE AUXILIARY FUEL SYSTEM AND BE STRUCTURALLY CAPABLE OF PREVENTING CARGO FROM CONTACTING THE FUEL SYSTEM INSTALLATION UNDER ALL LOAD CONDITIONS INCLUDING EMERGENCY LANDING LOADS. TANKS LINE FITTINGS, CONNECTIONS AND OTHER COMPONENTS I.E. VALVES, PRESSURE TRANSMITTERS ETC., MUST BE SHROUDED WITH REDUNDANT BARRIERS TO PREVENT FIRE HAZARDS FROM LEAKS.	• ADHERE TO FAA/CAA REQUIREMENTS
E. SECONDARY BARRIERS TO PREVENT LEAKAGE	NOT STATED	FAR 25.967 FAR 25.863		
F. SHROUD FOR TANK, FUEL VENT LINES AND COMPONENTS	NOT STATED	FAR 25.967		

6.4 DISCUSSION WITH ROTARY-WING AIRCRAFT MANUFACTURERS

The following is the responses from Rotary-Wing Manufacturers to a set of questions.

1. DEFINITION OF CRASH RESISTANT FUEL SYSTEM (CRFS) COMPONENTS

   The components of a CRFS consist primarily of valves, fittings, hoses and tanks.

2. NUMBER AND LOCATION, SIZE OF COMPONENTS, FLOW REQUIREMENTS

   The number and location of CRFS components depends on design configurations. The sketch below illustrates the initial CRFS developed for the U. S. Army. Subsequent CRFS designs are more simplified, lighter and more efficient.

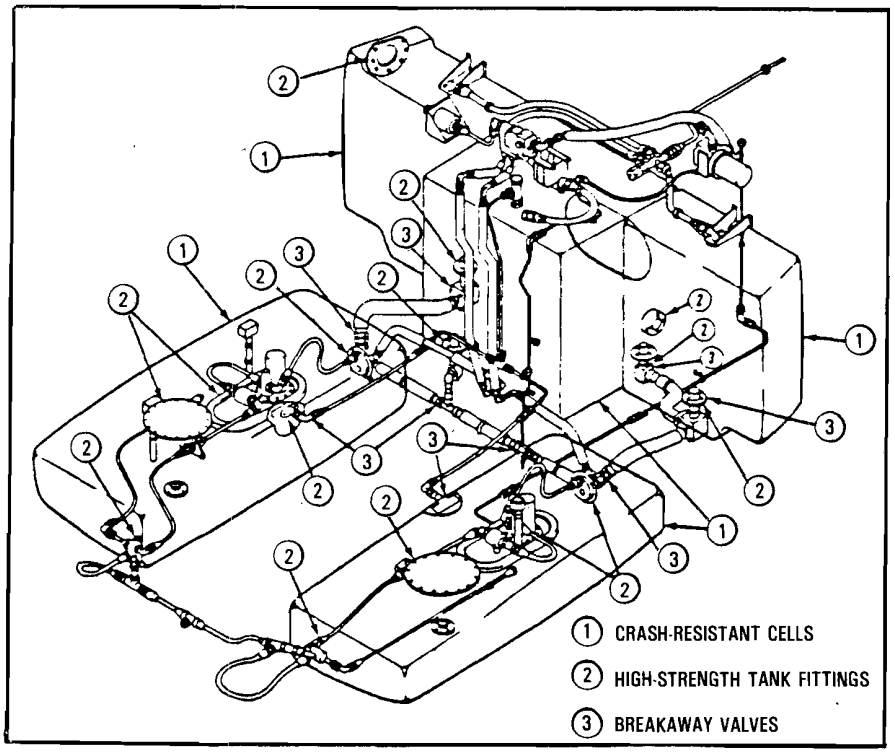

It was suggested that breakaway valves should not be placed in engine feedlines or in vent lines.

3. RELIABILITY OF COMPONENTS

Two instances were found in which self-sealing valves failed. Both occurred on the ground prior to flight and were attributed to the manufacture of the valve. Qualification tests weren't defined but, would be the same insofar as vibration, shock, temperature, and fatigue that all components require.

4. MAINTAINABILITY

No particular problems.

5. DESIGN REQUIREMENTS

Bell doesn't determine crash loads. They follow the U.S. Army survival design guide with regard to designing frangible fittings for a percent of local structural load or hose pull-out strength. It is important that the structure, where breakaway components are used, be stronger than the components.

6. USE OF AUTOMATIC SHUT-OFF VALVES?

Not used for two reasons. First, they do not want inadvertent closure and, thus, present a potential reliability problem. Second, they do not feel reponse time can be fast enough to prevent significant fuel spillage.

7. USE OF FLAME ARRESTORS?

Not used.

8. WEIGHT/COST FIGURES

Provided some data. A typical tank construction is as shown below:

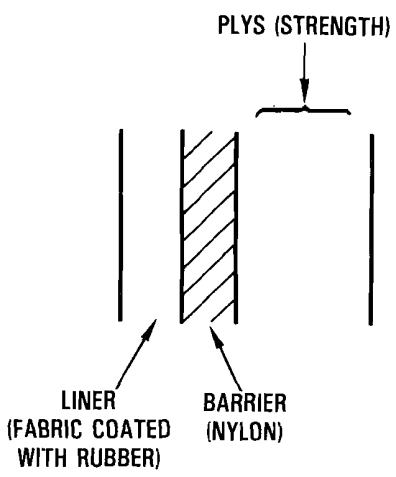

One figure given was 0.14 lb/gallon for a crash-resistant bladder (with fittings) above and beyond a noncrash-resistant bladder.

Tabulated data from a commercial helicopter program indicated that in going from a standard noncrash-resistant bladder to a crash-resistant bladder of 13 oz fabric would increase weight approximately 0.16 lb/ft^2. A 26 oz fabric would increase the weight by 0.26 to 0.28 lb/ft^2 or about 3.3 times a standard noncrash-resistant bladder.

9. NEED FOR STRUCTURAL MODIFICATIONS TO ACCOMMODATE A CRFS

Generally there should be no need for structural modifications to accommodate the use of a CRFS. As noted earlier, it is important that the strength of the structure where frangible fittings, or breakaway valves are used, be higher than the component strength. Also, it was pointed out that the design for potential failure modes of structure should be considered such that direct impact into a fuel tank is precluded when structure fails.

10. ANY DETRIMENTAL EXPERIENCE WITH THE USE OF FLEXIBLE HOSES, PARTICULARLY IN A 'HOT ENVIRONMENT'

The transport manufacturers expressed concern that flexible hoses are more prone to burning than steel tubes. The helicopter manufacturers indicated that metal tubes are used only in drain systems. They do not appear to be concerned about possible burn-through of the hose. The hoses are used primarily where motion is anticipated. Data from Aeroquip indicate that hose elongation between 34 percent and 66 percent is achievable.

11. HOW MUCH TIME IS GAINED VIA THE USE OF A CRFS?

No definitive answer could be given. It was estimated that perhaps up to 2 minutes additional egress time is achieved. The idea is to prevent a massive spill.

12. IS THERE A NEED FOR A CRASH-RESISTANT TANK CELL MATERIAL IF THE FUEL TANK IS IMBEDDED IN STRUCTURE A SIGNIFICANT DISTANCE AWAY FROM THE IMPACT REGION? HOW MUCH IS SIGNIFICANT?

The reason this question was posed was because in transport airplanes the fuselage auxiliary tanks are located between the cargo and passenger floors, which can be as much as 20 inches above the ground impact point. The helicopter manufacturer response is that the danger posed to the fuel tank is more due to distorted structure penetration than from ground obstacles. Consequently, the tanks are designed with a glass bag surface surrounding it. Aluminum is never used to encase the fuel tank. Also, the helicopter designs tend to have the fuselage fuel cell sit inside the structural envelope with no direct structural attachment except for fittings such as probes,

strainers, and drains. The distortion of these components can cause tears in the tank cell material.

13. WHAT EXPERIENCE IS THERE WITH WING-MOUNTED FUSELAGE FUEL TANKS?

Bell has the XV-15 tilt rotor which has fuel cells contained in the stub wings. There is no accident experience with this aircraft.

For a current commercial design, the wing-mounted cells are crash-resistant, utilizing an 8 oz fabric which weighs approximately 0.22 lbs/ft^2. The fuselage tanks for this aircraft use a 13 oz. fabric which weighs 0.27 lb/ft^2.

14. IDENTIFY GUIDELINES NOTED IN THE U. S. ARMY CRASH SURVIVAL DESIGN GUIDE WHICH ARE STRICTLY ADHERED TO

For the most part, the helicopter manufacturers follow the U.S. Army Crash Survival Design Guide. Volume V (USARTL-TR-79-22E) contains a comprehensive chapter on "post-crash fire protection", which describes and illustrates various design features for the tanks, lines and components.

15. DOES THE ACCIDENT EXPERIENCE IDENTIFY THE RELATIVE CONTRIBUTION TO FIRE FATALITIES OF THE VARIOUS PORTIONS OF A CRFS?

No. The idea is to prevent a massive release of fuel. In this sense, penetration of the tank might be more likely to release large quantities of fuel. However, if components distort and cause tear of tanks then they can be the culprit in a particular accident. Crash-resistance is a systems approach that includes the tanks, lines and components. Also important is attention to details. It was pointed out that relatiavely simple design detail for the drain sumps involving a contoured surface where exposure to ground can occur, could prevent a potential tear-out problem.

16. ARE COMMERCIAL REQUIREMENTS DIFFERENT THAN THE MILITARY REQUIREMENTS? CAN THESE DIFFERENCES BE IDENTIFIED?

The military requirements are very comprehensive and mandate the use of a CRFS. The commercial requirements are virtually non-existent in this area. There is movement, however, in the direction of requirements for CRFS for commercial rotorcraft. The CAA has invited comments from the manufacturers regarding future requirements for "crashworthy fuel systems for rotorcraft". The helicopter industry is of the opinion that the CRFS requirements for commercial rotorcraft should be less stringent than for the military rotorcraft. Some examples are illustrated in the table 6-8 comparison. The General Aviation Safety Panel (GASP) committee is reviewing this subjet for the FAR23 category aircraft, but no significant progress toward incorporating a CRFS has evolved as of now.

TABLE 6-8. CRFS FUEL CELL MATERIAL COMPARISON

TEST/DESCRIPTION	STANDARD BLADDER US-566RL	SAFETY CELL US-770	SAFETY CELL US-756	FPT** FPT/ CR.615	MILITARY MIL-T-27422B US-751
Drop Height with No Spillage (ft)	NA	50 (80% Full)	50* (80% Full)	65 (Full)	65 (Full)
Constant Rate Tear (ft-lb)	NA	400	210.0	42	400
Tensile Strength (lb)					
Warp	140	168	1717	NA	NA
Fill	120	158	1128	NA	NA
Impact Penetration (5 lb Chisel)					
Drop Height (ft)					
Parallel/Warp	NA	1.2	8.5	10.5	15
45° Warp	NA		8.5		15
Screw Driver (lb)	25	333-446	370.5	NA	NA
Material Weight (lb/ft^2)	.12	.36	.40	.55	1.0x
Weight Increase Factor	1.0x	3.0x	3.3x	4.6x	8.7x

* Also dropped from 65 ft with no spillage

** 350% elongation

6.5 GENERAL AVIATION SAFETY PANEL (GASP II) RECOMMENDATIONS

The General Aviation Safety Panel (GASP I) made recommendations in the area of energy absorbent seats and restraint systems for small, general aviation airplanes. The GASP II effort is directed toward post-crash fires in small, general aviation airplanes. The studies conducted by the National Transportation Safety Board (NTSB) and the Federal Aviation Administration (FAA) suggest that the nature of fire damage is such that it is difficult, if not impossible to determine where the fire started, how it progressed or whether the fatality could have been prevented solely by treating either the fuel tanks, fuel lines or fittings. The GASP II committee consensus is that the complete transference of fuel-system technology from rotocraft (or even racing cars) to small general aviation airplanes is highly unlikely for the following reasons;

- rotocraft fuel tanks tend to be box-like, since they do not need to be confined within relatively thin wires
- racing cars have tankage requirements that differ substantially in capacity and shape

The GASP II preliminary draft position goes on to state the following:

"Since the current technology of fire-resistant fuel systems may not be applicable, it is unrealistically simplistic to expect that small, general aviation airplanes can be manufactured economically with no likelihood of spilling fuel in a survivable accident. Specifically, the GASP found the state-of-the-art in fuel tank design to be inappropriate with respect to weight and capacity because of the surface/volume relationship of fuel tanks needed for typical general aviation airplanes.

A fuel tank system that would have the potential for no fuel spillage in a typical survivable accident would be too heavy and suffer too great a reduction in fuel volume to be practical. Analysis by the FAA indicates that for a full range of bladder material thicknesses from 0.030 to 0.108 inches, the weight penalty would be in the range of 0.26 to 0.62 pounds per gallon, and the reduction in fuel volume would be in the range of 8 percent to 14 percent, with many general aviation airplanes experiencing the higher losses in fuel volume. Members of the GASP have also conducted similar studies related to weight and volume, and they support the FAA's findings. Furthermore, preliminary analysis indicates that equipping small, general aviation airplane with fuel tanks that would be unlikely to spill fuel during a survivable accident would decrease their operational envelope, and that in-flight hours must be increased in order to achieve the same operational capability as current airplanes without special crash-resistant fuel tanks."

The preliminary draft position goes on to state that unless compromises related to weight and fuel volume are made, the likelihood of fuel being spilled in a survivable accident remains high for any small, general aviation airplane.

"While existing data fail to identify precisely what advantages would accrue from specific treatments of the fuel system in a small, general aviation airplane, the GASP presumes that benefits will result from reducing the likelihood of considerable fuel spillage in areas where there is an obvious and high probability of ignition (such as forward of the engine firewall) and in areas where the possibility of considerable fuel being spilled and ignited would be sufficiently high to reduce significantly the time available for extrication from the airplane (such as at the juncture of the wing and fuselage) in a survivable accident.

The purpose of treating a fuel system to prevent considerable spillage of fuel in a survivable accident is to delay the onset of rapid propagation of post-crash fire in order to increase the length of time available for the

pilot(s) and passenger(s) to remove themselves from the crashed airplane. These treatments and design changes may not in all cases prevent a post-crash fire. The Panel assumes that increasing the time available for extrication will be a contribution to safety, particularly if GASP I requirements for seats and restraint systems (which enhance the likelihood that an occupant in a survivable accident will be conscious and ambulatory) are applied.

Also, obvious sources of ignition, such as electrical lines that have sufficient voltage to create a spark if improperly grounded, should be separated from fuel lines in those areas where a fuel line rupture is likely in a survivable accidcent.

The means for increasing the time available for extrication in a survivable accident by preventing large quantities of fuel spillage near obvious ignition sourcees and near the pilot/passenger volume, needs to be considered for each design individually. It is not practical to develop a universal specification for the design of fire-resistant fuel systems that would be applicable to all aircraft."

The GASP committee further feels that the FAA should encourage aircraft and equipment manufacturers to investigate additional means to reduce fuel spillage from integral tanks and fuel tanks in general, provided such means do not detract from the overall performance and safety of aircraft because of the heaviness or impractical nature of their design.

GASP II Preliminary recommendations are as follows:

I. The General Aviation Safety Panel recommends that the Federal Aviation Administration require all small, general aviation airplanes capable of carrying fewer than 10 passengers and having an application date for a new type certificate after December 31, 1988 (assuming that appropriate amendments to the Federal Air Regulations can be enacted by that date) be designed so that no more than 8.0 ounces of fuel spillage will occur in the junctures and area denoted in paragraphs I(a) through I(d) below when the airplane

experiences a survivable accident with velocity changes at least equal to the GASP I proposal.

I(a). The wing/fuselage juncture
I(b). The firewall/engine-mount juncture
I(c). The juncture between tip tanks and wings
I(d). The dry-bay area behind an engine if used to carry fuel

II. The GASP recommends that any fuel tank located in an engine nacelle or any fuselage tank located between the engine and an area occupied by either pilots or passengers, or any fuel tank external to the wing's external contour (but not including tip tanks) should comply with the requirements of MIL-T-27422B, Type II, Class A with the following exceptions from MIL-T-27422B:

II(a). Constant tear rate - the minimum energy for complete separation shall be 200 foot pounds
II(b). Impact penetration - drop height of a five-pound chisel shall be 8.0 feet
II(c). Impact tear - drop height of a five-pound chisel shall be 8.0 feet and the average tear shall not exceed 1.0 inches
II(d). Crash impact Phase I - delete
II(e). Crash impact test of full size production test cell - the cell with all openings suitably closed shall be filled to 80 percent of normal capacity with water and the air removed. The cell shall be placed upon a platform and dropped from a height of 50 feet without leakage.

III. The GASP II committee recommends that the Federal Aviation Administration prepare an Advisory Circular that identifies recommended and acceptable means for compliance with any new regulations pertaining to fire-resistant fuel systems.

The GASP II preliminary draft recommendations upon review of the committee could change. Final recommendations are not due until 1988.

6.6 PRELIMINARY PRIORITY RANKING

The review of the literature, accidents, design analysis, and test data suggests that there are many approaches that can be considered to help reduce the potential of post-crash fire. Ten concepts have been included in the initial assessment, two of which have previously been recommended by the SAFER Committee. Some of the concepts may be multifaceted. For example, wing structural modification may involve more than one approach. Six factors; weight, volume reduction, maintenance, effectiveness, reliability and cost are considered. The rating is subjective and each concept is considered independent of the other concepts. A rating of 1 through 3 is used for each factor. The most favorable rating is 1 and the most unfavorable rating is 3. It is realistic to consider that this rating system is on a relative basis. The priority rating/ranking assessment is shown in table 6-9. For the most part, a particular change in design or approach by itself may not drastically reduce the fire hazard potential. By the same token, extended effort to improve a factor (i.e., reliability) may drive up another factor (i.e., cost).

Although it is not listed in the priority ranking, the design practice of paying close attention to details such as line routing, avoidance of protuberances, proper tank location, etc., where choices are available, is an important consideration. Obviously, there would be very little penalty associated with adherence to this philosophy. However, no recent accident suggests that lack of adherence to detail design consideration is attributable to a fire fatality. (Ruptured fuel lines were identified for the B-727, Salt Lake City, Utah accident on 11-11-65. This accident resulted in changes in line routing.)

Two SAFER committee recommendations; vent flame arrestors and emergency shutoff valves are discussed briefly. They are not included in the list of concepts because they have been previously recommended and ANPRM's have been issued for each.

TABLE 6-9. PRELIMINARY PRIORITY RATING OF FUEL CONTAINMENT CONCEPTS

CONCEPT	FACTOR TO BE CONSIDERED							
	Weight	Volume	Maintenance	Effectiveness	Reliability	Cost	Rating	Ranking
Crash resistant fuel system	1.0	1.0	2.0	2.0	1.5	1.0	8.5	1
CRFT in fuselage*	2.0	2.0	2.0	2.0	1.0	1.0	10.0	2
Spanwise compartmentation of wing tanks	1.5	1.5	2.0	2.0	2.0	2.0	11.0	3
Wing root structural modifications	1.5	1.5	2.0	2.0	2.0	2.0	11.0	4
Wing span structural modifications	2.0	1.5	2.0	2.0	2.0	2.5	12.0	5
High strength integral tanks	3.0	2.0	1.0	2.5	1.5	2.0	12.0	6
Internal liners	3.0	1.5	2.5	3.0	2.5	1.0	13.5	7
Tank explosion/suppression	2.0	2.0	3.0	3.0	1.5	2.0	13.5	8
CRFT in wing	3.0	3.0	3.0	1.5	2.0	2.5	15.0	9
Foams/foils	3.0	3.0	3.0	2.5	2.0	2.0	15.5	10

*This is a special case where fuel is added in the fuselage becauses the wing capacity is not adequate for range.

Vent flame arrestor -

This approach, like detail design considerations, is relatively simple to implement and one which would have no apparent significant adverse penalties. The SAFER Committee Report, which recommended the incorporation of this feature, identifies two accidents in which vent flame arrestors had the potential to reduce fatalities. An Advanced Notice of Proposal Rule Making (ANPRM) has been issued on this change but as of April, 1986, no action has been taken.

Emergency shut-off valves -

The SAFER report, which recommends the use of emergency shut-off valves, notes two accidents in which improved fuel cut-off was deemed to have the potential to reduce fire-related fatalities. Since post- impact fuel spillage occurs often in accidents, any measures to reduce flow immediately after impact would be beneficial. Weight, volume, and cost would appear to be minimal penalties. The major concern is for reliability and maintenance to ensure that no inadvertent shut-off of fuel occurs during normal operation, particularly if automatic shut-off controls are contemplated. Manual shut-off valves for wing pod mounted engines are in use in current transport airplanes. The use of shut-off valves, to prevent wing cross-over fuel feed, could provide the benefit of assuring the availability of exits on one side during some fuel spill accidents. An ANPRM has also been issued on this change and no action has been taken as of April, 1986.

The following is a description of the rationale for the respective rankings for each of the other concepts.

1. Crash resistant fuel system (CRFS) components -

Fuel line rupture is a major contribution to post-crash fire. The requirement to provide displacement capability in vulnerable areas is stated in U.S. Army recommendations and existing FARs. Flexible hoses are used in selected areas of transport airplanes such as between the airframe (wing) and engine, and in the transition from pressurized to non-pressurized fuselage areas. This change could be further implemented in vulnerable areas and in conjunction with the concept of self-sealing break-away fittings. Added weight, volume, and cost should be nominal. The degree of effectiveness of this change depends to some extent on the implementation of other changes since accident data do not classify this as a design defect. Maintaining flexible hoses could present a problem as deterioration could lead to contamination.

The U.S. Army Crash Survival Design Guide suggests the use of self sealing break-away fittings/attachments wherein failures can be

anticipated. The fitting and attachments would not be expected to add very much weight or cost, nor would they significantly reduce fuel volume. The major problems associated with these components would be assuring that inadvertent disconnects to disrupt required fuel flow do not occur. The accident data indicate fuel line rupture occurrence as a significant contributing factor in fire-related accidents.

Structural deformation in the fuel tank areas can result in tensile failures of plumbing conveying fuel to or from the fuel tanks. The use of self-sealing break-away valves, whose purpose it is to act as a "safety fuse" by separating and sealing under crash loads, has been successfully used in some helicopter installations to prevent rupture of the tank, hoses or fittings. The break-away valve has an integral poppet valve which is closed by the parting action of the fitting body preventing the discharge of fuel. Typically, the break-away valves are designed to assure that separation will occur at loads, whether tension, shear, compression, or combinations thereof which have been determined, by analyzing the aircraft for probable impact force and direction and by determining the resulting structural deformation around the valve. Examples of separation loads for which break-away valves intended for use in helicopters are designed and tested are shown in figure 6-4.

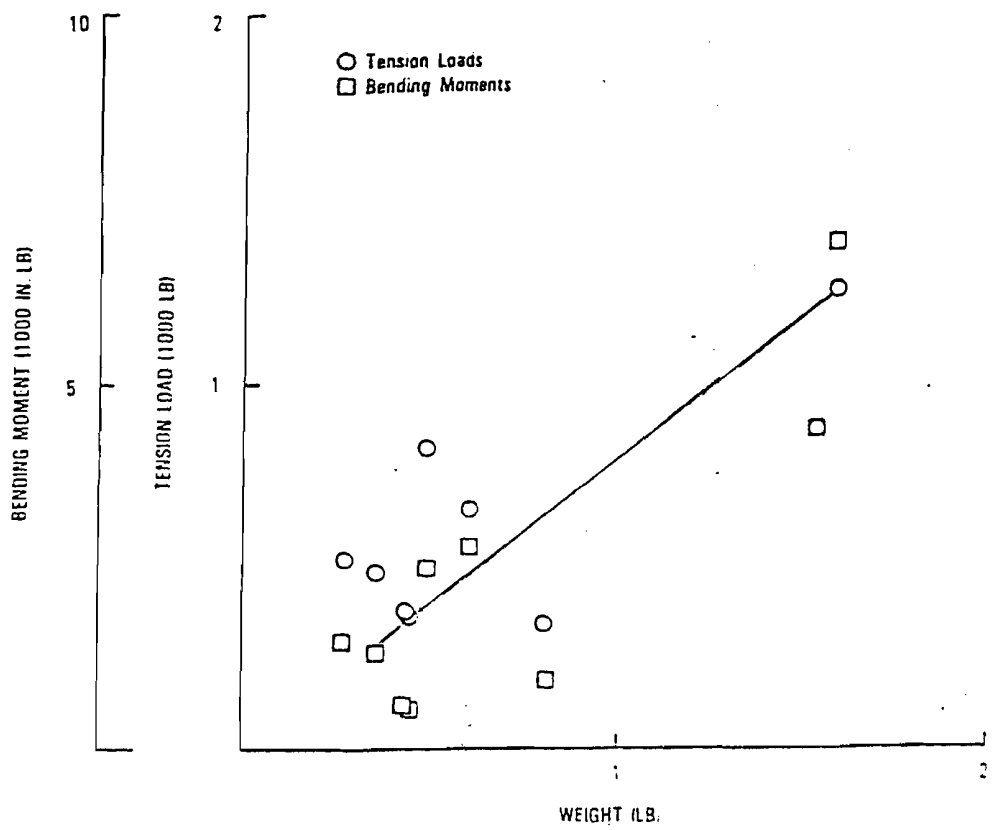

Figure 6-4. Example Breakaway Valve Weights and Separation Tension Loads and Bending Moments were Obtained from Test Data

Included in the illustration are the weights of the units tested. In addition, the break-away valves are tested to qualify them for use in specified environments. Break-away valves have not met with approval in civil aviation out of concern that a failure of the poppet in flight caused by fatigue stress or some other causes exclusive of a plumbing line break, could present a hazard due to unavailability of fuel. In evaluating the feasibility of using these types of fittings for transport type aircraft, the fatigue life as well as the strength and operational characteristics will have to be adequately demonstrated.

2. Crash Resistant Fuel Tank (CRFT) in fuselage -

The U.S. Army experience in the use of crash-resistant bladder fuel cells has been noteworthy for the significant reduction in post-crash fire fatalities for military helicopters. A CRFT is expected only to delay the sudden massive fire (e.g., fireball) long enough to allow the occupants to escape. In the U.S. Army applications, fuel in the fuselage is the primary storage location. For transport airplanes, this is a special case where fuel is added because the wing capacity is not adequate for the range requirements. This system is not an alternate to fuel storage in the wings. The use of military type crash-resistant fuel cell material will impose a substantial penalty in weight (8.7 x a standard bladder). Cell materials, proposed for civil rotorcraft with a reduced capability, would still impose a weight penalty about 3 to 4-1/2 times a standard bladder. In the fuselage, a crash-resistant tank would not be as effective as in the wing due to: 1) the nature of the crash environment, and 2) fuselage tanks can be located above crush zones and away from major structural breaks. Bladder tanks can deteriorate and contaminate fuel, thus, there is a degree of concern about maintenance and reliability. Several contemporary fuselage fuel tank configurations are discussed in Section 5, with regard to crash-resistant features, as well as potential improvements.

3. Spanwise compartmentation of wing tanks -

To some degree current designs already have compartmentized fuel tanks by virtue of the fact that there are several fuel bays in each wing. This concept would add additional fuel bays along the span and, with the incorporation of frangible fittings, isolate fuel spillage and reduce the fire hazard. It is anticipated that this type of change would add moderate weight, volume and cost penalties. Complications associated with this change, if any, would be with the addition of extra fittings. plumbing, controls and fuel management procedures.

4. Wing root structural modifications -

Failure at the wing root is noted to occur in many accidents. The most likely cause of this type of failure is a high distributed load which, in turn, produces a large fore-aft or up-down bending moment. This change is oriented toward the problem of wing separation. The reliability of instituting a structural change such as double walls would require test verification. This change would also require self-sealing break-away fittings to be effective. It would not be effective for concentrated load impacts.

5. Wing span structural modifications -

Among the design concepts to be considered, are wing leading edge reinforcement, front spar protection and forward skin panel changes. Since wing penetration by obstacles such as trees and poles is a frequent contribution to fuel spillage, a design change, which could minimize this effect, could be significant. However, the design development data suggests improvements with weight penalties of 3 percent to 5.4 percent of the wing dry weight, loss of fuel volume from 7 percent to 15 percent, and loss in range of 7.6 percent. The maximum impact velocity for these tests was 130 ft/sec. Accident data (Reference 1) show that in accidents wherein fuselage breaks occur the ratio of fatalities to onboard occupants as related to forward velocity is as shown below:

Average Velocity Ft/Sec	Fatality Ratio Percent
96	6.3
140	29.4
230	77.9

The L-1649 and DC-7 full-scale crash test data (references 13 and 14) suggest that current wing designs would most likely fail catastrophically if penetrated by trees and/or poles with the airplane moving at a velocity of between 198 ft/sec and 235 ft/sec. Thus, improvements in this area, at best, would be a partial reduction in penetration.

Several design concepts, which were presented in reference 10 were reviewed during this study and discussed in Section 5. It was concluded that forward skin panel design for improved impact resistance, front spar protection for pole/tree impact, and leading edge protection design for pole/tree impact, were viable. However, additional effort is needed to assure that these potential changes are adequate in the appropriate impact velocity range and do not impose complications with regard to maintenance as a result of the manner and/or location of installation.

6. High strength integral tanks -

Lack of tank strength is not a major reason for fuel spillage. On the contrary, the ability of a tank and the components to distort and flex under crash loading conditions, particularly penetration loads, may be more significant than strength. Reference 24 data show that both integral and bladder type cells could contain fuel under controlled deceleration which would exceed the human survival envelope. Increased strength will add weight and cost, yet, not significantly reduce spillage. Current tanks are capable of taking a relatively high inertia loading.

7. Internal liners -

To be crash resistant internal liners would require additional weight, although the volume and cost penalties may not be high. A major concern would be in the reliability and maintenance areas where retention must be assured. Replacement may have to be periodic. To prevent contamination, material would have to be compatible with the fuel.

8. Tank explosion suppression -

The SAFER study indicated that explosion suppression systems are used in some fuel tank applications where the tank geometry is relatively simple and direct communication to a detector element is simple. The installation can be very complex for multi-celled fuel tanks. This method will be ineffective in accidents where extensive fuel tank rupture occurs and where the major hazard is the external pool of burning fuel. This approach provides some degree of protection when minor damage occurs. In these circumstances of minor damage, simple flame arrestors installed in the fuel tank vent line to preclude propagation of flame down the vent and by systems which assure that engine fuel is shut off in fire emergencies, provide equivalent protection with less penalties.

9. CRFT in wing -

The major advantage of a crash-resistant fuel tank in a wing is the reduction of the adverse fuel spillage effects from a concentrated load. The significant negative factors are the weight, volume, and maintenance factors. The shape of a wing makes the installation of a CRT very complex and costly. In addition, bladder tanks require periodic servicing to avoid contamination.

One study (reference 24) shows that the replacement of an existing bladder, with a crash-resistant tank, for a transport airplane, could result in a 7.6 percent range loss and a 7 percent fuel volume loss.

Since the replacement was already bladder type, the volume loss could be higher for replacement of integral tanks. Another study, Reference 12, in which bladder cells were installed in a DC-7 wing showed volume loss of 15% and a 46 pound (5.7%) weight penalty (based on 120 gallon tank) for a pole impact condition at a velocity of 110 ft/sec. Reference 14 describes a test in which the wing No. 3 main tank that was composed of both an integral and crash resistant bladder type was totally destroyed by a pole impact, at an impact velocity of 235 ft/sec.

10. Foams/foils -

The SAFER committee states that the installation of heat reticulated foam or expanded metal foil have the advantage of being passive systems. They prevent excessive overpressures from developing and eventually completely extinguish tank fires. Foams are used in military applications where projectile penetration is a threat. However, a published article (reference 54) indicates that fuel tank foam fires have been a problem during the period 1978-84. The foams, in use at the time, were not to be used with commercial fuels (Jet A) because the non-additive fuel is more prone to generating an electrostatic charge on the foam during refueling. Some major concerns are extreme weight, volume reduction, impaired normal maintenance activities, and bacterial growth (contamination). Metal foils have an advantage of a significantly higher melting point (1100 degrees F versus 360 degrees F for foams). However, since they are semi-rigid, they present complex structural design problems in order to permit access to fuel tank components for service and maintenance.

6.7 GENERAL APPROACHES

From the review of the state-of-the-art technology and the priority ratings several general approaches appear to warrant further consideration. These approaches are categorized as follows:

1. Component improvements - low penalty, minimal improvement

2. Wing Fuel Containment via wing structural modifications - high penalty, moderate improvement

3. Fuselage Fuel Containment - moderate penalty, moderate improvement

The final selection of approaches could consist of combinations of one or more approaches and will depend on the relative benefit and penalty tradeoffs. The general approaches are described as follows:

Approach No. 1 - Component Improvements

- Crash resistant fuel system components

  Self-sealing breakway valves
  Frangible fitting
  Flexible lines

- SAFER committee recommendations

  Vent flame arrestor
  Emergency shutoff valves

Approach No. 2 - Wing Structural Modifications

- Wing span changes

  Front spar
  Leading edge
  Lower skin
  Forward skin

- Wing root changes

  Increased strength
  Double-wall construction

- Spanwise compartmentation of tanks

- Energy Absorbing Devices

Approach No. 3 - Fuselage Fuel Containment

- Crash-resistant fuel tank material

- Crash-resistant fuel system components

Approach No. 1 - Component Improvements

Approach No. 1 identifies several component related design considerations. Some of the concepts noted are partially in use in current transport aircraft design. These improvements are applicable to both wing and fuselage fuel containment. Individually, these items have projected low weight, volume and cost penalties. Maintainability, reliability and effectiveness factors are considered to be moderate. If hardware currently in use by helicopter manufacturers is easily transferable, then the concerns for maintainability and reliability could be reduced. If transport airplane performance criteria requires additional research and development in some areas (e.g., deformation versus acceleration valve actuation), then implementation could be longer range.

- Crash-Resistant Fuel System Components

Flexible Lines - Transport category airplanes design for the use of flexible lines in locations where there is a high stretch potential and are required to use hoses where relative displacement is anticipated. Flexible lines may be more prone to leakage and less fire retardent than steel tubing. In a current wide body transport airplane, flexible hoses are used in locations shown in Figure 6-5. The rotary-wing aircraft manufacturers do not indicate any deleterious affects with regard to maintainability and reliability. For transport designs an assessment should be made of possible additional locations for use of flexible hoses.

Self-Sealing Breakaway Fittings Valves - This design feature is heavily favored by the rotary-wing aircraft manufacturers and is in use in some FAR25 category aircraft. For transport airplane configurations, in which it is not currently used, it will be necessary to identify locations where the installation of components could prove beneficial. Of interest will be the size and design requirements at specific locations. A preliminary assessment of potential usage of such components for a current widebody jet aircraft,

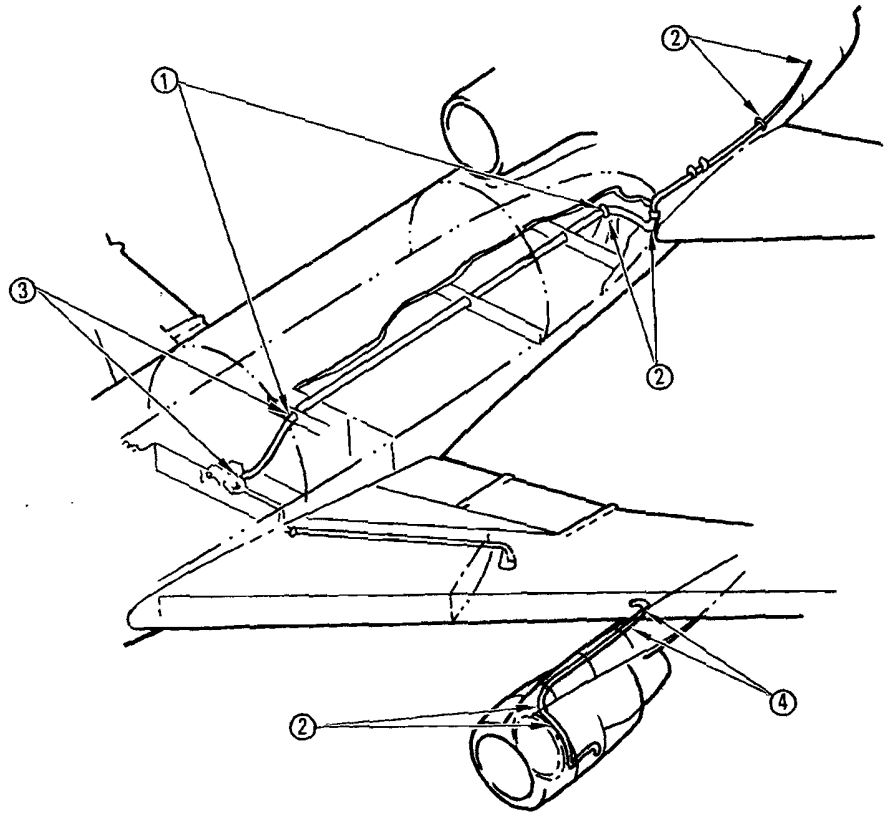

1. HOSES THRU CABIN FLOOR ROUTED IN DRAINED AND VENTED SHROUD. PROVIDES 50% STRETCH DURING CABIN BREAK-UP. HOSES USED TO FACILITATE INSTALLATION AND REMOVAL
2. HOSES EMPLOYED WHERE RELATIVE DISPLACEMENT IS POSSIBLE
3. HOSE USED ACROSS FUSELAGE DISCONTINUITY (AT REAR WING SPAR) WHERE FUSELAGE FAILURE IN CRASH IS PREDICTABLE. HAS 50% STRETCH CAPABILITY
4. HOSE SECTION (INTEGRAL WITH LONG TUBE USED TO ELIMINATE JOINTS) PROVIDES FLEXIBILITY AND FACILITATES INSTALLATION AND REMOVAL

Figure 6-5. Use of Flexible Hose in Current Widebody Transport Airplane

which doesn't include these items, is shown in figure 6-6. The wing engine fuel line breakaway fittings, which is a design requirement in the event the pylon departs the wing, could be candidates for the self-sealing feature. Rotary-wing aircraft experience with regard to reliability and maintainability should be a valuable input.

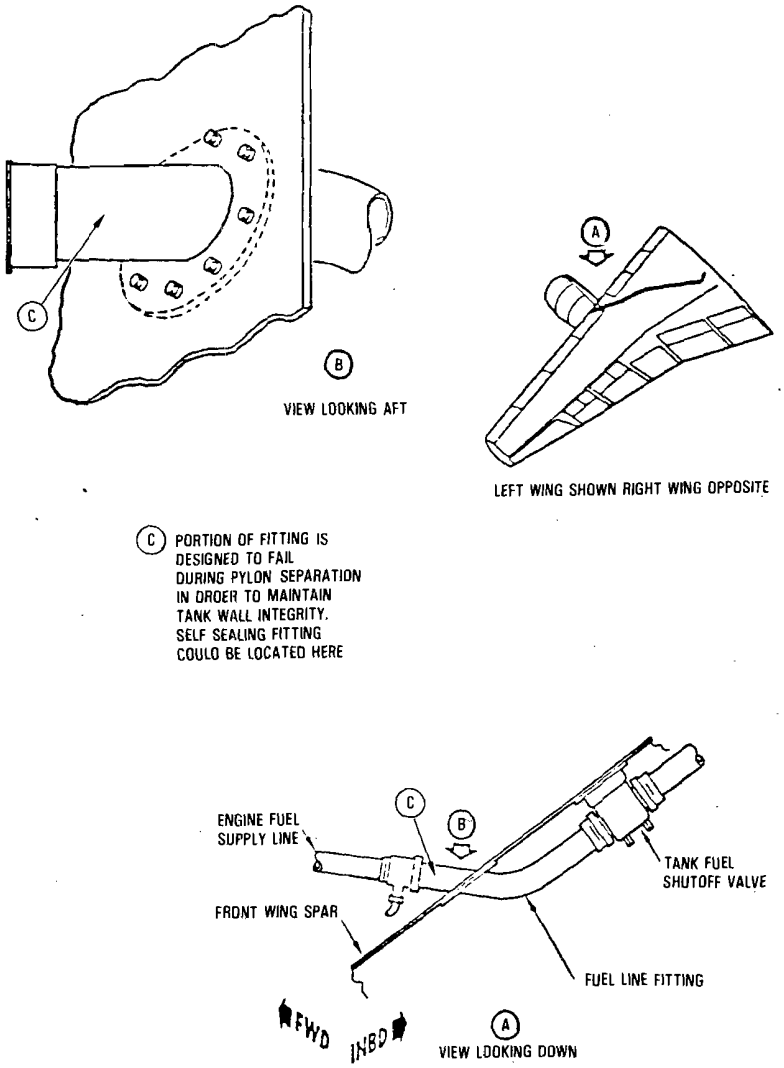

Figure 6-6. Potential Application of Breakaway Fitting in a Current Widebody Transport Airplane

- SAFER Committee Recommendations

Vent Flame Arrestors - Flame arrestors are currently in use by the transport airplane manufacturers. If a fire can propagate into a fuel tank and the use of a flame arrestor can slow down or preclude the propagation of the fire up through the vent line, it is a desirable feature. Typically flame arrestors should be installed in ventilation and drain lines where there is a possibility of flame spreading from the outside of the airplane or from one compartment to another.

Emergency Shut-Off Valves - Tank shut-off or isolation valves are used at selective locations within the aircraft. For example, current widebody jet aircraft have tank isolation valves at the locations similar to those shown in Figure 6-7 at the point where the fuel lines leave the fuel tank. These valves are manually controlled by the crew members. The wing engine tank isolation valves would be candidates for automatic shut-off valves provided the sensing mode (force, acceleration, deflection) were reliable, otherwise, inadvertent closures could be catastrophic. Automatic shut-off valves are not used in rotary-wing aircraft for the same reason they are not used in transport airplanes; concern for inadvertent closure.

Approach No. 2 - Wing Fuel Containment via Structural Modifications

Approach No. 2 defines a number of wing design changes which most likely will be long term as far as implementation is concerned. Each of the changes

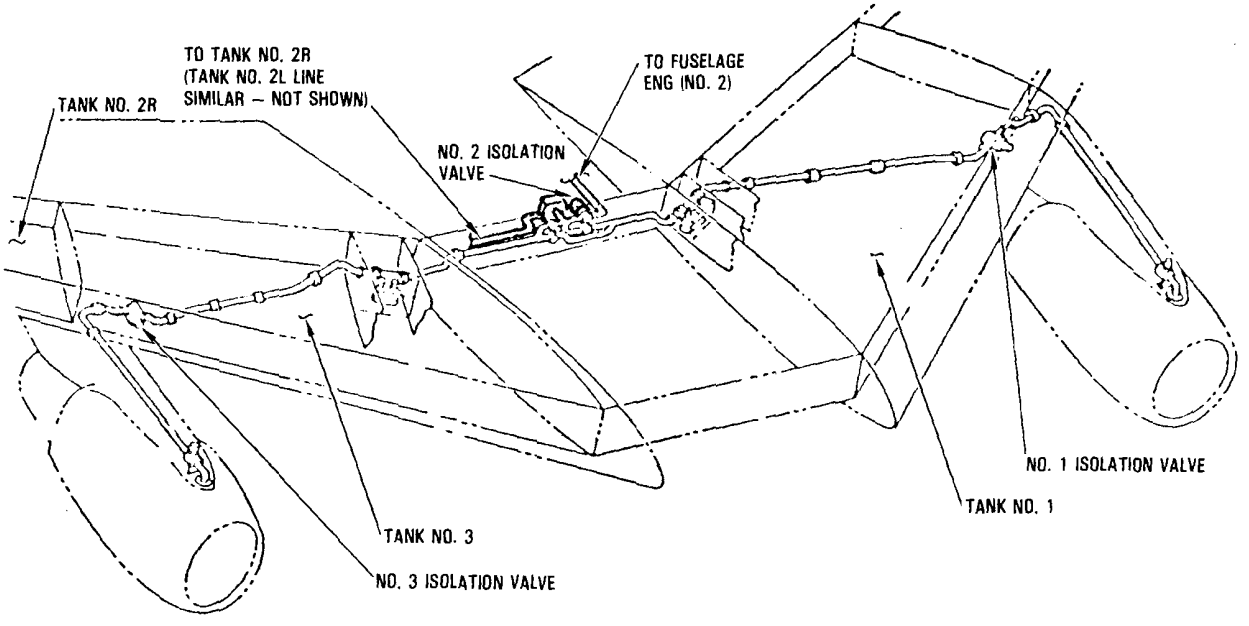

Figure 6-7. Typical Location of Tank Isolation Shut-Off Valves in a Current Widebody Transport Airplane

will have to be proved with regard to cost and feasibility. The latter point will require extensive testing, and could involve moderate to large size structural changes before implementation. The anticipated effectiveness, as a result of incorporating these changes individually, is considered moderate in that each will be desirable for a particular failure mode (e.g., obstacle penetration, distributed load). The penalties associated with each of these changes vary from "low" to "moderate."

The following is a description of various approaches discussed earlier.

1. Spanwise Compartmentation of Wing Tanks - Current transport airplane design contain, to a limited degree, spanwise compartmentization of wing fuel tanks. Figure 6-8 shows a widebody design in which each wing contains two distinct integral fuel tanks. The spanwise concept would further compartmentize the fuel cells. The crossover fuel lines from each cell would require self-sealing fittings to shut off fuel flow from one cell to another in the event of a penetration. In so doing, the loss of fuel would be reduced since each impact zone will have less fuel to spill. If the break were to occur at a location between the wing root and inboard engine, which is a likely location based on accident data, then fuel flow closure would still be needed with self-sealing fittings. Fuel flow management and the complexity of the system could be increased with the extra compartments. It is surmised that before any R&D hardware is developed for this concept computerized analyses of the operational aspects (e.g., flow pressure, volume, cross-feed, valve closures) would be required.

2. Forward or Lower Skin Panel - Corrugated skin panel and sandwich panel designs (Concepts (b) and (c), figure 5-3) are considered to have potential advantages since weight, volume loss and cost are not viewed significant negative factors. However, complexity of design and manufacturing as well as maintenance and inspection procedures are major concerns. Concepts utilizing honeycomb material are not considered appropriate for an integral wing fuel tank in commercial application because such material is prone to leakage, difficult to maintain and susceptible to lightning. These concepts have the potential to improve impact resistance by providing increased bending strength and/or protection from impact of the forward upper skin. These changes may be of limited benefit in many of the conditions which are encountered in survivable accidents.

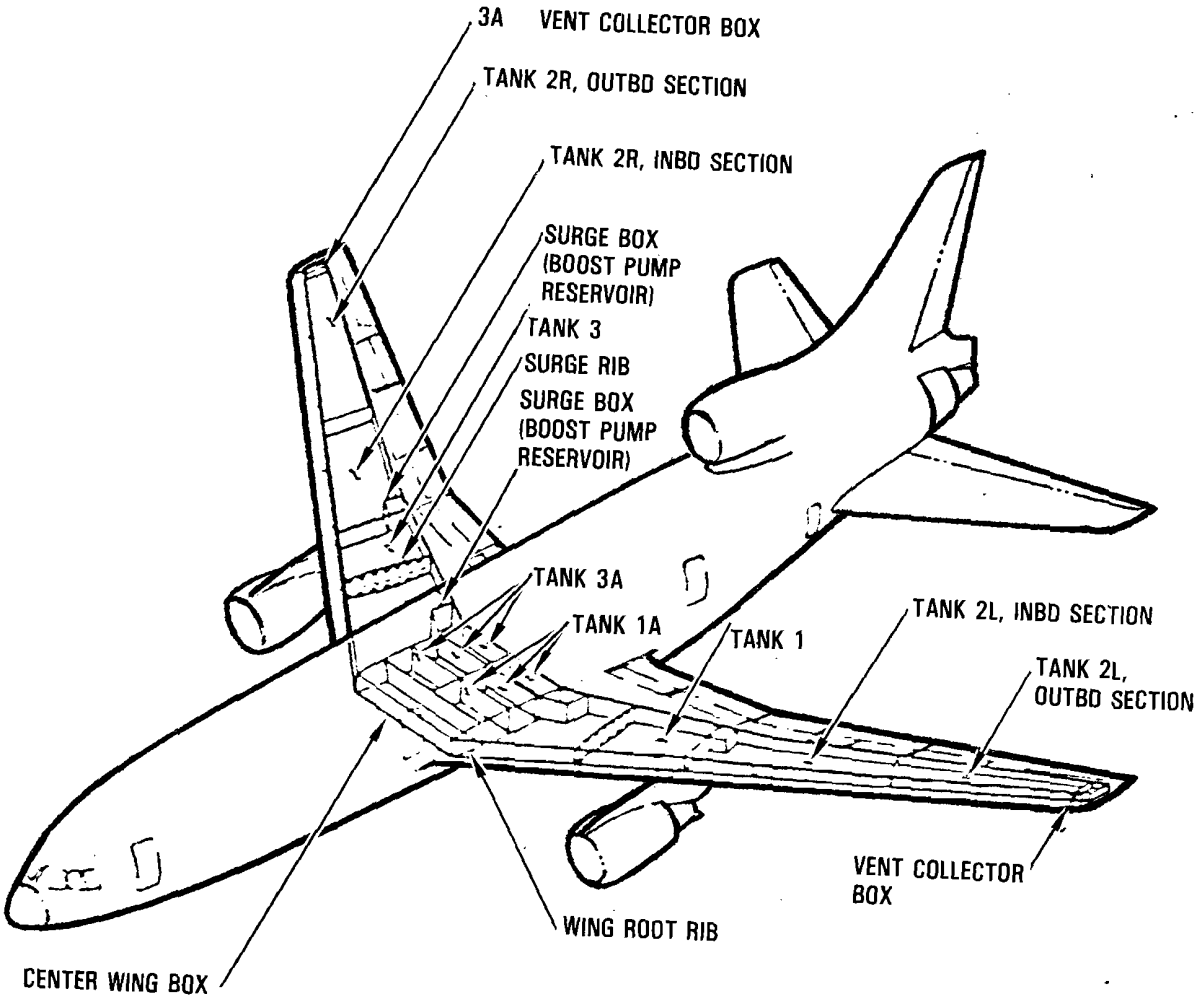

Figure 6-8. Spanwise Wing Fuel Tank Compartmentation

3. Leading Edge Protection - Figure 5-5 depicts two designs for protection against pole and tree impact. Both design concepts have many negative aspects, particularly the need to provide functionally practical designs which do not interfere with operational systems. The concepts also indicate a need to provide strengthened back-up structure to distribute loads. Of the two designs, Concept (b) is a more likely candidate. To protect the leading edge the strengthened section would have to withstand impact from objects (tree, pole) with the airplane moving forward at speeds up to 250 ft/sec. It is unlikely that at such a high velocity that penetration of fuel tanks and subsequent fuel spillage could be avoided.

4. Front Spar Protection - The proposed concepts shown in figure 5-4 have many negative aspects, particularly with regard to complexity of design fabrication and maintenance. The concepts, while likely to achieve limited protection against penetration, could be more hazardous during ground slide-out due to potential for lower skin collapse. Two front spar design concepts, shown in figure 5-2, provide protection from inertial fuel pressure. However, current designs are adequate for this loading condition.

5. Structural Modification at Wing Root - Structural failure at the wing root, as a result of obstacle penetration, has been noted in many accidents. However, in general, the failure is usually not a clean break nor does it occur at an exact location such as the wing/fuselage intersection. The dichotomy of this concept is that the root is designed as the point of maximum bending for gust loads (flight) and yet for crash loads this will have to represent a weak link. The design to accomplish this feat (perhaps with fore-aft shear bolts) would have to recognize that a) failure cannot occur during normal operations, or mild impact conditions, b) crash loads tend to be high g, short time duration pulses, and c) obstacle penetrations can occur anywhere along the wing span. In addition, once a break occurs, component fittings with self-sealing capability are needed.

6. Energy Absorbing Devices - One of the several concepts shown in figure 5-6, Concept (c), appears acceptable structurally, provided the bay remains dry. In general, only a small amount of energy will be absorbed and penetration of cells could take place. This approach probably falls into the category of leading edge protection, front spar protection and forward skin panel in that limited protection may be achieved but that additional measures may be necessary to limit the amount of fuel spillage.

Approach No. 3 - Fuselage Fuel Containment

Approach No. 3 specifies the use of a crash-resistant fuel tank in the fuselage. As noted in Section 5, there are several concepts currently employed in the use of fuselage-mounted fuel tanks. This change will cover the use of crash-resistant materials as well as concepts. Once again, the feasibility of the use of crash-resistant materials in transport airplane depends heavily on current military experience. The most concern is for weight and volume penalties, depending on the degree of crash-resistance needed or desired. This change is a short-term implementation if readily acceptable materials are available, otherwise, it could be longer term.

Crash-Resistant Fuel Tank Material - The U.S. Army military rotary-wing experience with crash-resistant fuel systems (CRFS), which includes tank material, as well as related components (self-sealing valves, breakaway fittings, flexible lines) has proven tremendously successful in reducing fire-related fatalities. The CRFS for rotary-wing applications appears to be almost exclusively for fuselage-mounted fuel tanks. The U.S. Army, in deciding on the use of crash-resistant tanks, had a clear cut need to drastically reduce the lethal effects of post-crash fires based on accident experience. Commercial aircraft accident experience has not shown failure of fuselage-mounted tanks, in limited use, to be a major contribution to injury/fatality, albeit the use of auxiliary tanks in the fuselage is accelerating in current designs. The U.S. Army, in deciding to implement the use of crash-resistant fuel tanks, was willing as the customer to dictate priorities and accept weight penalties. These penalties, as noted earlier, can be substantial. Table 6-8, obtained from reference 56, shows a comparison of CRFS fuel cell material for standard bladders, that are recommended for civil helicopters (enclosed area) and the corresponding military requirements. The table shows the wide range of fuel cell bladder material available and used today. The reference report goes on to state, "The importance of realistic requirements is shown in the weight increase row of table 1 (table 6-8). Note that the fuel cell bladder material for the civil helicopter criteria is about 3.5 times heavier than today's standard which is considerably below the unrealistic military weight increase of 8.7 times heavier. Going from civil CRFS criteria to military CRFS only increases weight with little or no increase in post crash fire protection for survivable civil helicopter accidents." The reference report further states, "In addition to the criteria of table 1 (table 6-8), a CRFS should tolerate, without significant spillage, the relative motion between fuel system components during structural deformation anticipated in a crash environment. This means that stretchable hoses, extra length hoses, self-sealing breakaway valves, and frangible fuel cell attachments to structure may be needed to allow the CRFS components to move with the structural deformation and still contain the fuel."

SECTION 7

BENEFIT AND PENALTY ANALYSES

7.1 BENEFIT ANALYSIS

7.1.1 Wing Fuel Containment

The basis for establishing the potential benefit from incorporating fuel containment concepts into future transport airplanes is derived from an extrapolation of accident data presented by the three major domestic airframe manufacturers under contracts sponsored by the FAA and NASA (references 1-3). The studies included accidents that occurred between 1959 and 1978. More recent accidents could alter the conclusions somewhat but are not included because no comprehensive pertinent summary is available. The studies reported on in references 1-3 covered a combined total of 176 accidents as was depicted in figure 3-1. Table 7-1 shows a comparison of the number of accidents, onboard occupants and fatality distribution for each. The distribution between fire and trauma fatalities is different in the three studies due to the mix of accidents that were included in the individual studies. Of interest is that the percentage of fire fatalities to the total number of fatalities is approximately a third (28.6 percent to 36.5 percent) for all three studies. There are a lot of "unknowns," particularly for the reference 1 study.

TABLE 7-1. COMPARISON OF ACCIDENT STUDY DATA

	Accidents	Total Pax. Onboard	Fatalities					Fire Fatalities % of Total
			Total	Fire	Trauma	Other	Unknown	
Boeing (Ref. 1)	153	12668	3791	1356	476	218	1741	35.7
Douglas (Ref. 2)	47	10069	1835	671	683	-	481	36.5
Lockheed (Ref. 3)	66	5879	1129	394	540	-	194	28.6

The reference 1 study is by far the most comprehensive with regard to fire fatalities and, thus, will form the basis for much of the benefit analysis. Table 7-2, obtained from reference 1, categorizes accidents by scenario. Accident severity categories are defined as shown in table 7-3. Several crash scenarios are eliminated namely scenario S13 (impact in water), S24 (slide/roll into water), S23 (high obstruction), S33 (solid wall impact), S34 (high obstruction impact) and S4 (unclassified) for several reasons including:

- The water impacts do not generate fire fatalities,
- impacts into high obstructions provide unrepresentative data (e.g. "Tenerife" accident involved two airplanes on runway),
- unclassified accidents have insufficient data, and
- impact into solid wall results in highly destructive conditions

When table 7-2 is adjusted for the aforementioned deletions it appears as shown in table 7-4. Included in table 7-4 are 120 accidents, which resulted in 94 fires and in 976 known fire fatalities. Fifteen of the 120 remaining accidents are in the severity category No. 6. How much contribution these accidents provide to the fire fatalities cannot be determined directly from the reference 1 provided data. However, from table 7-5, obtained from reference 1, it can be observed that category 6 accidents represent nearly 14 percent of both of the total known categorized accidents and associated fire fatalities. Category 6 also accounts for approximately 68 percent of the unknown fatalities and 40 percent of the trauma fatalities. One approach is to reduce table 7-4 results by these percentages. Subtracting 14 percent from the 976 table 7-4 total leaves approximately 839 fire fatalities associated with severity level 1 to 5 accidents. Subtracting 68 percent of 1269 unknowns (table 7-4) leaves 407 unknowns associated with category 1-5 accidents. Similarly subtracting 40 percent of 416 leaves 250 trauma fatalities associated with the remaining category 1-5 accidents shown in table 7-4. The new ratio of fire to trauma fatalities is 839/250 = 3.356. Assuming that the unknowns are in proportion to the known fire and trauma fatalities for

TABLE 7-2. CATEGORIZATION BY SCENARIO

SCENARIO	OCCUPANTS	FATALITIES	% OCCUPANTS	FIRE FATALITIES	% OCCUPANTS	TRAUMA	% OCCUPANTS	DROWN	% OCCUPANTS	UNKNOWN	% OCCUPANTS	NUMBER OF ACCIDENTS	HULL LOSS	FIRE	FUSELAGE	TANK RUPTURE	ENGINE SEPARATION	CABIN INTEGRITY	SEATS	GEAR SEPARATION	DOORS	FLOORS	LINES	WATER	ACCIDENT SEVERITY 1	2	3	4	5	6	UNK
S1: AIR TO SURFACE	4447	1391	31.3	452	10.2	133	3.0	202	4.5	604	13.6	53	44	33	40	35	25	17	18	32	21	18	4	9	2	7	14	10	11	8	1
S10: no further definition	121	83	68.6	0	0	45	37.2	0	0	38	31.4	2	2	1	1	1	0	0	0	0	0	0	0	0	0	0	0	0	1	0	1
S11: impact on other than gear	1141	677	59.3	150	13.1	76	6.7	0	0	451	39.5	13	13	12	11	12	9	1	6	5	3	1	1	1	0	1	3	0	3	6	0
S12: impact on gear	2749	425	15.5	302	11.0	8	.3	0	0	115	4.2	31	22	20	23	18	14	12	10	23	14	12	2	1	2	6	10	7	5	1	0
S13: impact in water	436	206	47.2	0	0	4	.9	202	46.3	0	0	7	7	0	5	4	2	4	2	4	4	5	1	7	0	0	1	3	2	1	0
S2: SURFACE TO SURFACE	4974	989	19.9	412	8.3	214	4.3	16	.3	347	7	61	52	39	34	39	33	21	13	45	15	13	3	4	1	14	17	10	13	4	2
S20: hard ground or on runway	182	15	8.2	15	8.2	0	0	0	0	0	0	2	2	2	0	2	0	0	0	2	0	0	0	0	0	0	2	0	0	0	0
S21: soft surface	1127	219	19.4	37	3.3	41	3.6	15	1.3	126	11.2	13	10	10	7	10	9	7	2	13	3	2	0	1	0	4	4	1	2	2	0
S22: low obstruction	2702	676	25.0	315	11.7	165	6.1	0	0	196	7.3	35	30	22	19	21	16	10	8	26	9	9	2	1	1	7	7	7	10	1	2
S23: high obstruction	681	78	11.5	45	6.6	8	1.2	0	0	25	3.7	9	8	5	6	6	6	2	2	4	2	2	1	0	0	3	4	0	1	1	0
S24: slide/roll into water	282	1	.4	0	0	0	0	1	.4	0	0	2	2	0	2	0	2	2	1	0	1	0	0	2	0	0	0	2	0	0	0
S3: FLIGHT INTO OBSTRUCTIONS	2278	1134	49.8	462	20.3	100	4.4	0	0	572	25.1	30	28	24	23	28	19	7	10	18	11	11	0	3	0	2	9	2	9	7	1
S31: wing low	442	332	75.1	32	7.2	18	4.1	0	0	282	63.8	8	7	7	7	7	5	1	2	3	3	3	0	1	0	1	1	0	3	3	0
S32: impact column	1135	249	21.9	125	11.0	63	5.6	0	0	61	5.4	16	15	11	11	15	9	5	5	11	6	6	0	2	0	1	6	2	5	2	0
S33: impact solid wall	285	264	92.6	35	12.3	0	0	0	0	229	80.4	3	3	3	3	3	2	0	2	1	0	1	0	0	0	0	0	0	0	2	1
S34: impact high obstruction	416	289	69.5	270	64.9	19	4.6	0	0	0	0	3	3	3	2	3	3	1	1	3	2	1	0	0	0	0	2	0	1	0	0
S4: UNCLASSIFIED	969	277	28.6	30	3.1	29	3.0	0	0	218	22.5	9	9	7	3	5	3	0	0	0	0	0	0	0	2	1	0	0	2	1	3
GRAND TOTAL	12668	3791	29.9	1356	10.7	476	3.8	218	1.7	1741	13.7	153	133	103	100	107	80	45	41	95	47	42	7	16	5	24	40	22	35	20	7

TABLE 7-3. CATEGORIES OF ACCIDENT SEVERITY

1. Minor impact damage - includes engine/pylon damage or separation, minor lower fuselage damage, and minor fuel spillage.

2. Moderate impact damage - includes higher degrees of damage of category 1 and includes gear separation or collapse.

3. Severe impact damage but no fuselage break - includes major fuel spillage due to wing lower surface tear and wing box damage.

4. Severe impact damage - includes severe lower fuselage crush and/or class 1 or class 2 fuselage breaks, may have gear collapse, but no tank rupture.

5. Extreme impact damage - includes class 1 or 2 fuselage breaks with wing separation or breaks, may have gear and/or engine separation, and fuel spillage.

6. Aircraft destruction - includes class 3 fuselage breaks or destruction with tank rupture, gear and/or engine separation.

Fuselage breaks: Class 1 - sections break but remain together
Class 2 - sections break and open
Class 3 - sections break and move off

severity level 1 to 5 accidents would add 313* to the 839, for a total of 1152. Since the accident data is predominantly for wing fuel tanks it is assumed that the maximum benefit that could have been derived over the 1959-1978 period if all these remaining 70 category 1-5 fire accidents (table 7-4, less category b) were eliminated, would be 1152 or 57.6/year.

Another approach is to assume that since the 15 category 6 accidents in table 7-4 represents 75 percent of the total of 20 category 6 accidents (table 7-5) and thus the number of fire, trauma and unknown fatalities should be reduced accordingly. Following this tack the reductions are ≈ 142, 143 and 874, respectively. The revised category 1-5 numbers are 834, 273 and 395 for fire, trauma and unknown fatalities, respectively. The ratio of fire to

TABLE 7-4. CATEGORIZATION BY SCENARIO MODIFIED

SCENARIO	OCCUPANTS	FATALITIES	% OCCUPANTS	FIRE FATALITIES	% OCCUPANTS	TRAUMA	% OCCUPANTS	DROWN	% OCCUPANTS	UNKNOWN	% OCCUPANTS	NUMBER OF ACCIDENTS	HULL LOSS	FIRE	FUSELAGE	TANK RUPTURE	ENGINE SEPARATION	CABIN INTEGRITY	SEATS	GEAR SEPARATION	DOORS	FLOORS	LINES	WATER	ACCIDENT SEVERITY 1	2	3	4	5	6	UNK
S1: AIR TO SURFACE																															
S10: no further definition	121	83	68.6	0	0	45	37.2	0	0	38	31.4	2	2	1	1	1	0	0	0	0	0	0	0	0	0	0	0	0	1	0	1
S11: impact on other than gear	1141	677	59.3	150	13.1	76	6.7	0	0	451	39.5	13	13	12	11	12	9	1	6	5	3	1	1	1	0	1	3	0	3	6	0
S12: impact on gear	2749	425	15.5	302	11.0	8	.3	0	0	115	4.2	31	22	20	23	18	14	12	10	23	14	12	2	1	2	6	10	7	5	1	0
S2: SURFACE TO SURFACE																															
S20: hard ground or on runway	182	15	8.2	15	8.2	0	0	0	0	0	0	2	2	2	0	2	0	0	0	2	0	0	0	0	0	0	2	0	0	0	0
S21: soft surface	1127	219	19.4	37	3.3	41	3.6	15	1.3	126	11.2	13	10	10	7	10	9	7	2	13	3	2	0	1	0	4	4	1	2	2	0
S22: low obstruction	2702	676	25.0	315	11.7	165	6.1	0	0	196	7.3	35	30	22	19	21	16	10	8	26	9	9	2	1	1	7	7	7	10	1	2
S3: FLIGHT INTO OBSTRUCTIONS																															
S31: wing low	442	332	75.1	32	7.2	18	4.1	0	0	282	63.8	8	7	7	7	7	5	1	2	3	3	3	0	1	0	1	1	0	3	3	0
S32: impact column	1135	249	21.9	125	11.0	63	5.6	0	0	61	5.4	16	15	11	11	15	9	5	5	11	6	6	0	2	0	1	6	2	5	2	0
GRAND TOTAL	9559	2676	24.2	976	10.2	416	4.3	15	0.2	1269	13.2	120	101	85	79	86	62	37	33	83	38	33	5	7	3	20	33	17	29	15	3

TABLE 7-5. SUMMARY OF FATALITIES

Cat	Accidents	Hull Loss	Fire	Occupants	Total Fat. #	Total Fat. %	Fire #	Fire %	Trauma #	Trauma %	Drowning #	Drowning %	Unk. #	Unk. %
1	5	3	4	616	53	8.6	53	8.6	0	0	0	0	0	0
2	24	12	6	1684	1	.06	0	0	1	.06	0	0	0	0
3	40	36	35	3425	875	25.54	722	21.08	5	.15	18	.53	130	3.80
4	22	20	9	2024	225	11.11	55	2.72	5	0.25	165	8.15	0	0
5	35	35	28	2618	934	35.68	335	12.80	210	8.02	32	1.22	357	15.93
6	20	20	18	1990	1547	77.74	189	9.50	190	9.54	3	0.15	1165	58.54
UNK*	7	7	3	311	156	50.16	2	.64	65	20.90	0	0	89	28.62
	153	133	103	12668	3791	29.93	1356	10.70	476	3.76	218	1.72	1741	13.74

* Insufficient information for category assignment

trauma is 3.055 and thus proportioning the unknowns accordingly adds 298 fire fatalities for a total of 1132 for 20 years. On a per annum basis this equals 56.6.

Both approaches yield between 56.6 and 57.6 fatalities per year. For purposes of this study 57 per year will be used.

Improved wing fuel containment can be achieved through elimination or reduction of wing fuel tank rupture and fuel line severance. Figure 7-1 (reference 1), shows the various contributions to wing fuel tank rupture. Figures 7-2 and 7-3 show the relationship between fuel line fires, fuel tanks spills and engine/pylon breaks for wing pod and aft body engined aircraft. Wing breakage occurs due to distributed and/or concentrated impacts. Concentrated impacts, such as those associated with poles, trees, obstructions contribute to as many as 30 of the wing breakage accidents (<30 percent), while distributed impacts (ground drag, wing low) are identified on 25 accidents (~25 percent). Inertia loading is noted as a cause in 8 accidents. However, from previous discussions, this latter type of loading does not appear to be an area for which design deficiencies exist. Tear or rupture of the wing lower surface may have been a contributing factor in up to 27 accidents. Tank ullage explosion is noted in 17 to 23 accidents. However, in most cases a severe fire has already existed due to lack of fuel containment for some other reason (e.g. obstacle penetration, fuel line severance, engine separation). From the reference 3 study it was noted that in 66 accidents, 48 hard fires or the potential for fire (fuel leakage) occurred. Column, contour and frontal impacts numbered 18, 12, 11, respectively, in wing failure accidents. Correspondingly, for the reference 1 study, similar involvements were 21, 25 and 10, respectively. Since the frontal impacts generally involved obstacles such as seawalls, buildings, dikes and destructive failure, they are not to be considered further. The 25 contour impacts in the reference 1 study consist of 7 wing-low accidents and 18 ground drag accidents; some of the latter accidents may not involve contoured obstacles such as embankments, ravines, etc. For example, if only half of them did,

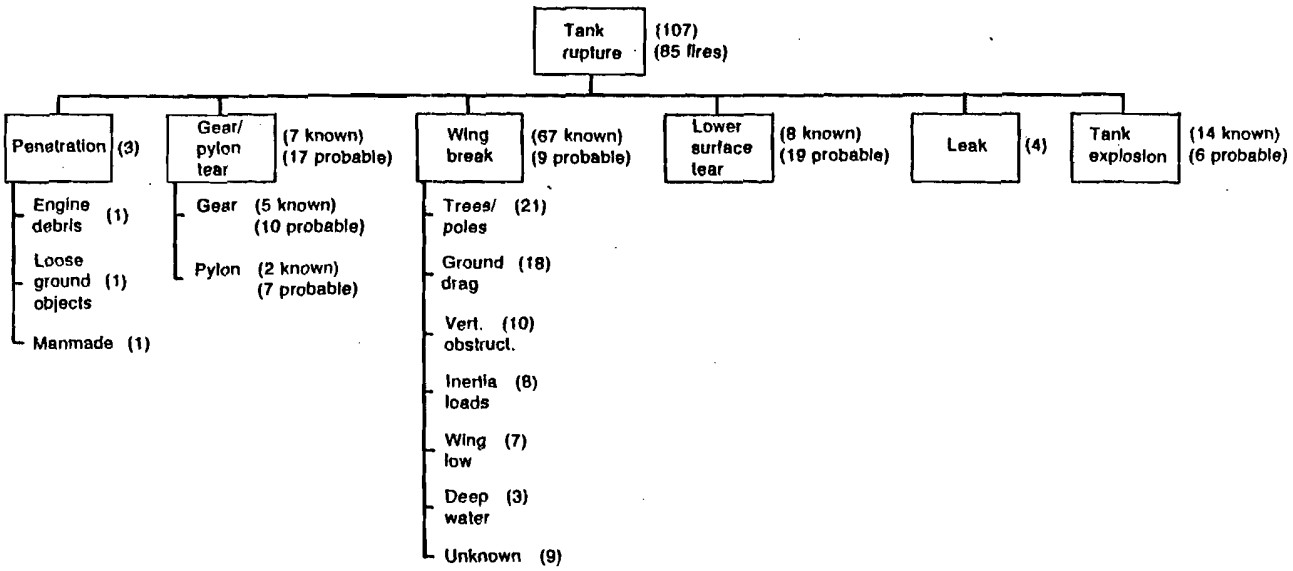

Figure 7-1. Types of Tank Rupture

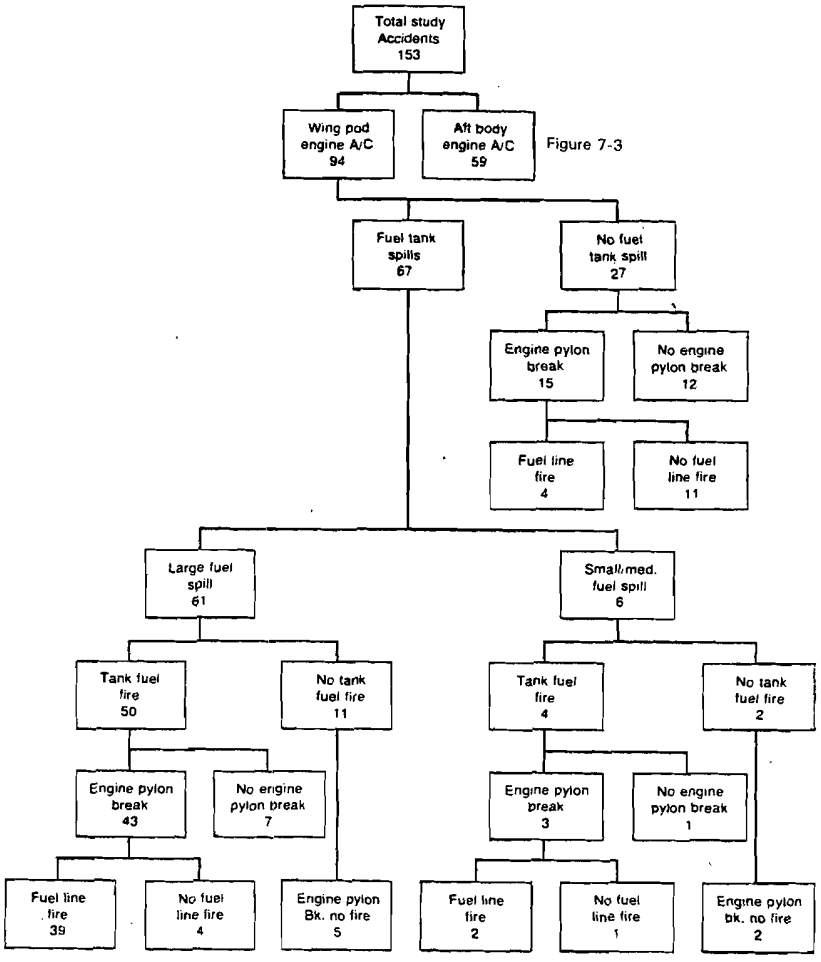

Figure 7-2. Engine/Pylon Separation/Collapse and Fuel Tank Rupture, Wing Pod Engined Aircraft

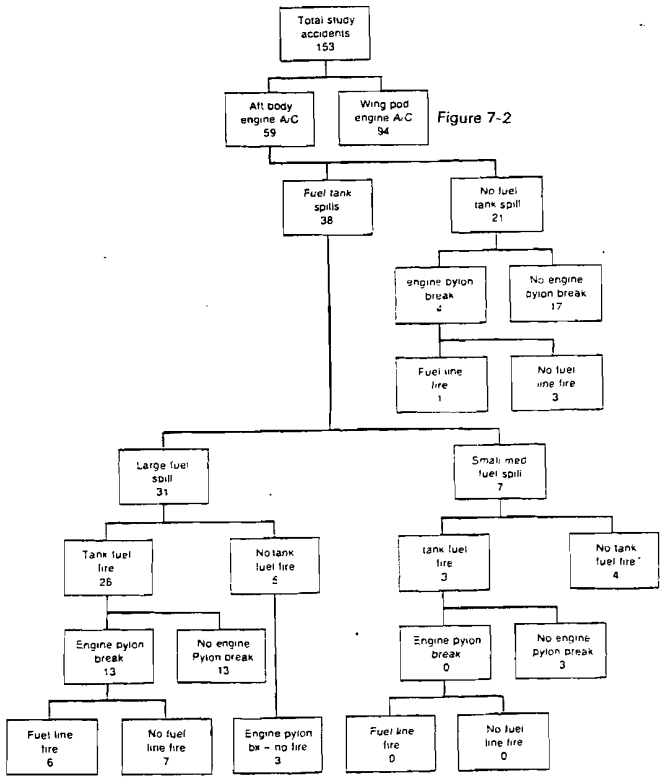

Figure 7-3. Engine/Pylon Separation/Collapse and Fuel Tank Rupture, Aft Body Engined Aircraft

then there would be 16 contour impacts and the ratios of the two studies would be relatively close. The reference 3 study shows that the wing root is most vulnerable with 21 failure occurrences versus 9 at the tip and 6 at some other location. The reference 1 study does not specify wing failure location, but based on the relative number of occurrences of columnar and contour impacts, it is assumed that the wing root would also be vulnerable. The reference 1 study identifies 47 fuel line related fires, plus 12 fuel line spills with no fire. This means 59 fuel line spills out of a total of 97 potential fires associated with tank ruptures. Reference 3 data indicate 20 fuel line spills for 48 fire and potential fire hazard accidents. The aforementioned comparison of references 1 and 3 data is summarized in table 7-6.

In order to assess benefits, it is necessary to compare the data from the two studies to determine if a priority ranking can be developed. The ranking of benefits is difficult because (1) The total for each study exceeds 100 percent since the events are not mutually exclusive, and (2) each of the

TABLE 7-6. COMPARISON OF REFERENCE 1 AND REFERENCE 3 DATA

Accident Data	Reference 1 * No. (Percentage)	Reference 3 ** No. (Percentage)
Failure location		
• Root	Not Available	21 (43)
• Other	Not Available	15 (31)
Impact type		
• Concentrated	21 (22)	18 (36)
• Distributed	16-25 (17-26)	12 (24)
Wing Lower Surface Tear	27 (28)	Not Available
Fuel Line Severance	47 (48)	20 (41)

* Percentage based on 97 fire hazard accidents
** Percentage based on 48 fire hazard accidents

studies lacks a complete database. As noted earlier, it is reasonable to assume that the failure location is similar for both studies on the basis of the type of loading that causes wing failure. Furthermore, it was previously stated that wing lower surface tear/rupture accidents in the reference 1 study occur primarily due to sliding over rough terrain and tend to involve severe fires localized in the wing area. The frequency of occurrence of this type of failure is about the same as that for concentrated impacts. For simplicity, the same 28 percent occurrence rate will be used for completing the reference 3 data. Now the data can be normalized for each study individually and for both combined, as shown in table 7-7.

Before the ranking is finalized, the cause and effect relationships should also be examined. For example, the wing failure location is somewhat related to the type of impact. Tree and pole impact will probably slice through structure and cause failure of the leading edge. On the other hand, a

TABLE 7-7. NORMALIZED DATA

Item	Reference 1		Reference 3		References 1 and 3
	Initial Percentages	* Normalized	Initial Percentages	** Normalized	*** Normalized
Failure location at					
• Root	43	21.8	43	21.1	21.5
• Other	31	15.7	31	15.3	15.5
Impact type					
• Concentrated	22	11.2	36	17.8	14.5
• Distributed	26	13.2	24	11.8	12.5
Wing Lwr. Surface Tear/Rupture	28	14.2	28	13.8	14.0
Fuel line fire	48	23.9	41	20.2	22.0
TOTAL	198	100.0	203	100.0	100.0

* To 197 total ** To 203 total *** To 400 total

distributed load, such as an inclined slope impact, would produce high bending moments at the wing root. Wing lower surface tear and rupture results mostly from sliding over rough terrain. In a sense, this failure is more related to contoured surface as opposed to impact with either distributed or concentrated loads. It may also relate to failure of other components (e.g. landing gears) which penetrate the lower surface of the wing tank.

Concentrated and distributed loads can be considered among the causes of failure; the failure being wing root separation, wing penetration, fuel tank rupture, fuel line leak. Table 7-8 illustrates the significant wing failure modes, the associated causes and applicable fuel containment concepts. One can readily ascertain that when considering benefits related to fire fatality reduction that concentrated and impact occurrence may be more correctly combined with the failures that result. Fuel spills occur either through fuel

TABLE 7-8. RELATIONSHIP BETWEEN WING FAILURE MODES AND APPLICABLE FUEL CONTAINMENT CONCEPTS

Wing Failure Mode	Causes of Failure	CRFS System		Wing Structural Modifications				
		Bladders	Fuel Lines and Components	Increasd Root Strength	Leading Edge	Front Spar	Fwd Skin Reinf.	Lwr Skin Reinf.
Wing Root Failure	Distributed load (e.g. embankment, slope)	X	X	X				
Wing Failure along span	Local failure (e.g. tree,pole) due to concentrated and distributed loads (e.g. embankment slope)	X	X		X	X	X	
Lower surface tear/rupture	Rough terrain penetration of structure from concentrated load	X	X					X
Fuel line rupture	Distributed and concentrated loads		X					

tank or line rupture. As noted earlier, fuel tank rupture is caused primarily by wing break, lower surface tear and gear/pylon tear or separation. The latter point leads to fuel line leakage in 47 out of 85 fuel tank fires as noted in reference 1 data. Wing breaks, at the root or otherwise, and lower surface tear leads to fuel spill and fires. Thus, fuel tank fires can potentially be reduced with fuel containment concepts which address the

failure modes listed in table 7-8. Distributed loads are considered to influence wing root failures, while concentrated loads will effect wing span structural modifications and, possibly, wing lower surface tear/rupture. With this approach in mind, the data presented in table 7-7 is reorganized to reflect the elimination of concentrated and distributed impact loads. Fuel line fires are still listed although their contributions may be reflected in three failure modes; wing root failure, wing failure along the lower span, and lower wing surface tear/rupture.

In reality, one or more failures could contribute in a fatal accident. Unfortunately, the accident data does not allow one to distinguish the relative contributions of each failure to the fire fatalities in any of the accidents. It would also be unrealistic to think that any one improved fuel containment concept would totally eliminate fire fatalities, no matter how well conceived the design. The data contained in table 7-7 is reorganized to reflect distribution of wing failure modes and is presented in Table 7-9. The premises of how the data is distributed is noted. The data is organized in table 7-9 in an attempt to provide perspective, so the penalty trade-off (weight/cost) can be assessed on the basis of relative contributions and different levels of reduction.

7.1.2 Fuselage Fuel Containment

The preponderance of data from the accident studies described in references 1 - 3 are for transport airplanes which do not contain auxiliary fuselage fuel tanks. Consequently, the data cannot be used in a direct fashion to make an assessment of fire fatalities related to fuselage fuel tanks. However, reference 1 presents data which may be useful in evaluating the potential for fire in the event auxiliary fuselage tanks were utilized. In reference 1, fifty-seven (57) to sixty-four (64) accidents are reported in which fuselage lower surface rupture occurs (no above floor damage). These accidents are in addition to the 71 of the 153 accidents which may have experienced one or more fuselage breaks. Excluding water entry rupture, 57

TABLE 7-9. CONTRIBUTION TO FIRE FATALITY

Wing Failure Modes	Normalized Percent Contribution*	Related Fatalities Per Year
fuel line severance	35.5	20.4
wing root break	27.75	15.8
wing span break	22.75	12.9
wing lower surface tear/rupture	14.0	7.9
TOTAL	100.0	57.0

*Obtained using following premises from data in table 7-7:

Fuel Line Severance = Fuel Line Severance + 50% Distributed Impacts + 50% Concentrated Impacts

Wing Root Break = Wing Root Break + 50% Distributed Impacts

Wing Span Break = Other + 50% Concentrated Impacts

Wing Lower Surface Tear/Rupture = Wing Lower Surface Tear/Rupture

lower surface rupture accidents involved 4233 occupants, of which 841 (20 percent) were fatalities. Of these 57 accidents, 34 were accompanied with extensive lower fuselage surface rupture and account for 818 of the 841 fatalities. Fifteen of the 57 accidents had fatalities, of which 12 had fire fatalities. If the ratio of fire fatalities to total fatalities is the same as for the total of this study (35.7 percent) then 300 would have been fire fatalities. Up to this juncture all fire fatalaties in the accident study are asumed to relate predominantly to wing fuel tank systems. On the assumption that if auxiliary fuel tanks and wing center tanks were installed and exposed to a severe crash environment they would contribute to fire fatalities in the same 35.7 percent ratio there would be potentially 241 more fire fatalities over the 20 year period. This figure is arrivied at by multiplying the

remaining 3392 non-fatalities (4233-841) by the .071 which is the percent estimated fire fatalities to total onboard obtained (300/4233). On a per annum basis this is ≈12.

Another set of data, relating to fuselage floor displacement, is presented in reference 1. For accidents with this type of structural behavior there are as many as 40 occurences. Exclusive of accidents involving water entry or floor displacements without fuselage breaks there are 20 such occurences in which 500 of the 1816 onboard occupants experienced fatalities. Using the same reasoning as for the fuselage lower surface accidents, 179 are assumed to be fire fatalities (.357) associated with wing fuel tank failures. This ratio to total onboard is 9.86 percent. Multiplying the remaining 1316 nonfatal passengers by this latter ratio yields 130 potential fire fatalities associated with fuselage fuel tanks for the 20 year period for this type of accident. On a per annum basis this equates to 6.5. Since some severe fuselage breaks could be associated with category 6 accidents these totals could reduce to 14 percent or to 122 and 6.1 for 20 years and per annum, respectively.

Thus, the totals for both fuselage lower surface tear and floor displacement combined with fuselage breaks is 363 fire fatalities in 20 years or ≈18 per year.

7.1.3 Summary of Potential Fire Fatality Reductions

The estimated potential benefit that could be achieved with improved fuel containtainment, in terms of reduced fatalities per annum, is as follows:

wing fuel containment	-	57.0
fuselage fuel containment	-	18.0

The manner in which the estimated reduced fatalities per annum were determined is summarized in figures 7-4 and 7-5 for wing and fuselage fuel containment related fire fatalities.

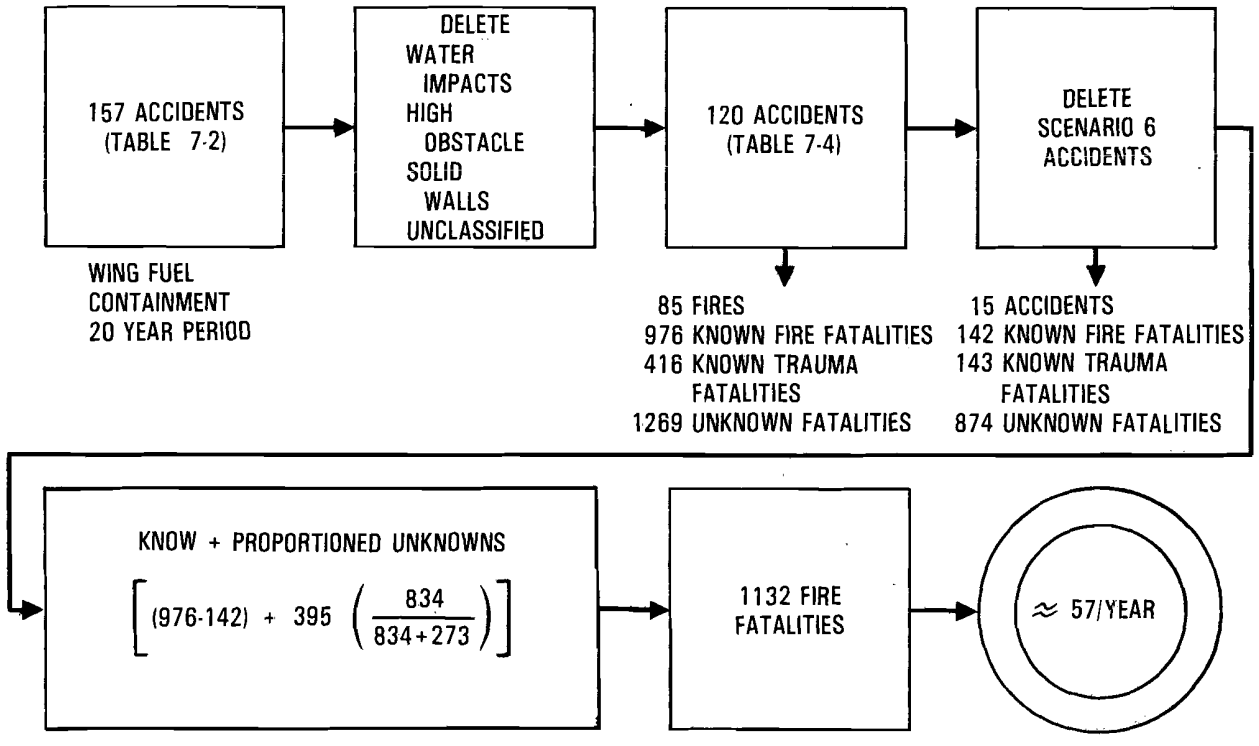

Figure 7-4. Estimate of Wing Fuel Containment Related Fire Fatalities per Year.

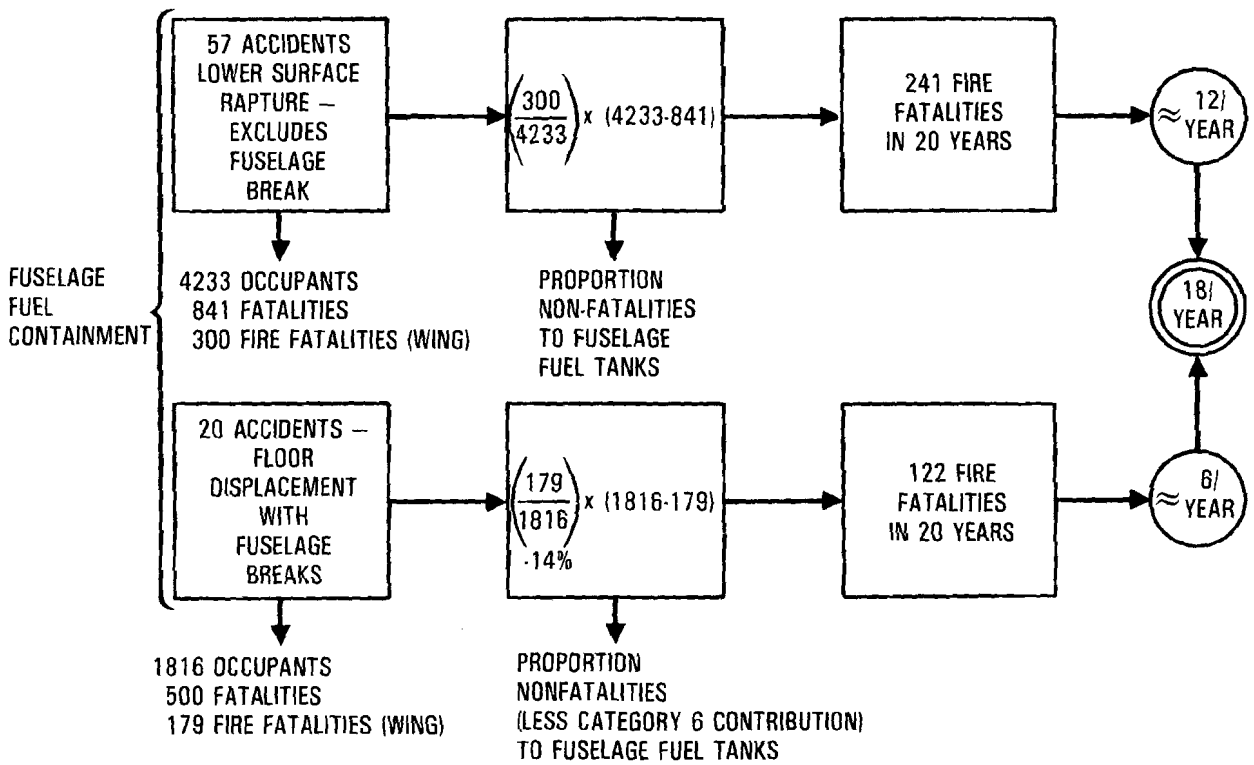

Figure 7-5. Estimate of Fuselage Fuel Containment Related Fire Fatalities per Year

The distribution of the benefits is divided into four areas as follows:

1. Wing root modifications with and without wing center section.
2. Wing span modifications with a CRFS fuel system.
3. Auxiliary fuselage tank with a CRFS.
4. Other structural modifications; i.e., landing gear separation, engine/pylon attachment.

Table 7-10 is a matrix of assigned benefits into the four above noted areas. The modifications to the landing gear and engine pylon are not described in this study but are shown in table 7-10 to indicate that a portion of the fire fatalities could be reduced by other than the fuel containment concepts covered in this analysis. Both landing gear and engine/pylon separation for the most part would result in the need for improvements in the other areas to achieve fire fatality reductions.

The benefit analysis ignores the following:

1. The trend in terms of fatal accidents per flights and miles has shown a decline since the late 1950's as can be observed in figure 7-6. The trend for jets and U.S. travel is particularly good. Considering all aircraft and world travel during the decades of the 1960's and 1970's, fatal accidents have been reduced by more than half. However, while this trend would decrease the potential benefits (less fire fatalities) derived earlier, the favorable trend would be offset by such factors as:

   a) The accident data partially accounts for the trend since the mid-point of the three studies is 1969.

TABLE 7-10. BENEFIT DISTRIBUTION BY DESIGN CONCEPT

Concept	Fuel Line Severance	Wing Root Break	Wing Span Break	Lower Surf. Tear	Fuselage Break/ Floor Disruption	Total
1. Wing Root Modification						
a. No CFRS Center Sect.	5.1	7.9	-	-	-	13.0
b. CFRS Center Section	5.1	7.9	-	-	-	13.0
2. Wing Span Modification With CRFS	5.1	-	12.9	3.9	-	21.9
3. Fuselage Auxiliary Tank						
a. CRFS Tank Mat'l.	-	-	-	-	9.0	9.0
b. CRFS Conponents	-	-	-	-	9.0	9.0
4. Other Structural Modifications; Landing Gear Separation, Engine/Pylon Attached	5.1	-	-	4.0	-	9.1
TOTAL	20.4	15.8	12.9	7.9	18.0	75.0

b) The introduction of jets made a big contribution to the reduction of fatal accidents. It is doubtful that, now 25 years later, the decline while be as steep. Figure 7-7 indicates as much.

c) There are more airplanes in service and consequently more flights and this is expected to increase in the future as is suggested in reference 57 (see figure 7-8). Thus, there could be as much as twice as many departures in 1997 as compared to 1979.

d) There are more auxiliary fuel tanks installed today and more are anticipated in the future.

e) Fire fatalities associated with the severity category 6 of the reference 1 study were eliminated. The accident indicates that

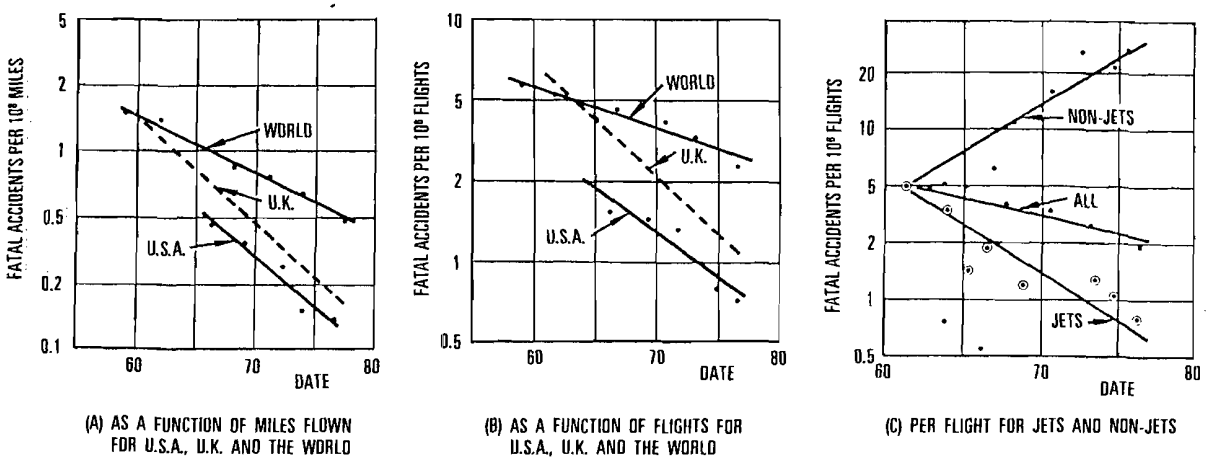

Figure 7-6. Trend of Fatal Accident Rates

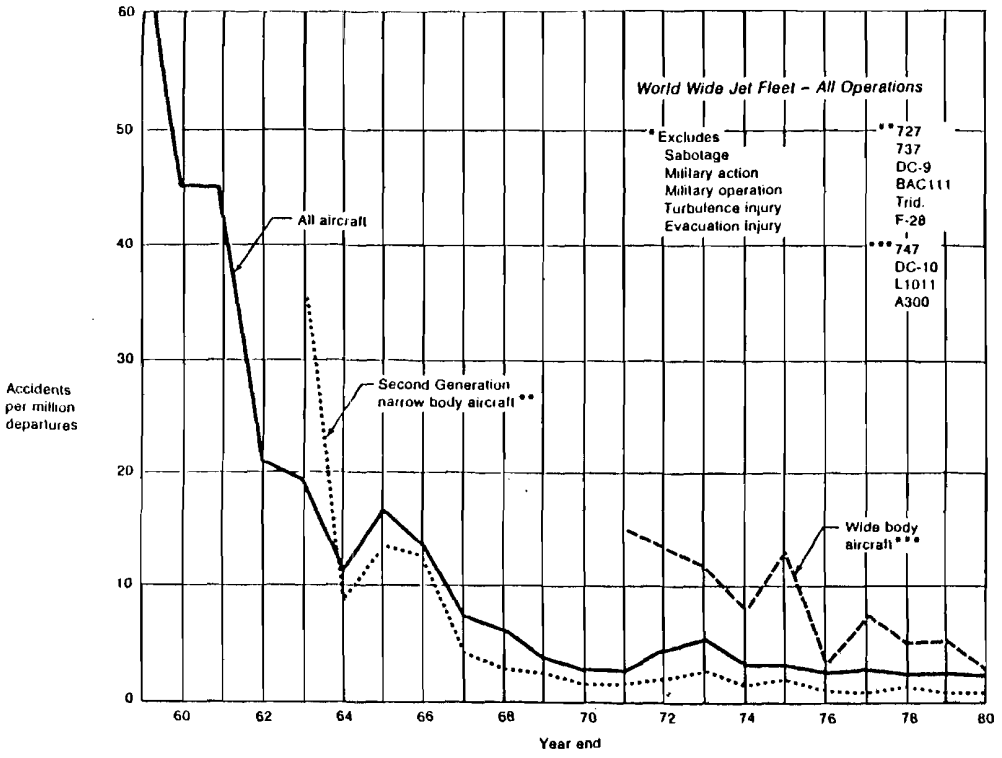

Figure 7-7. Accident Rates for All Types of Accidents

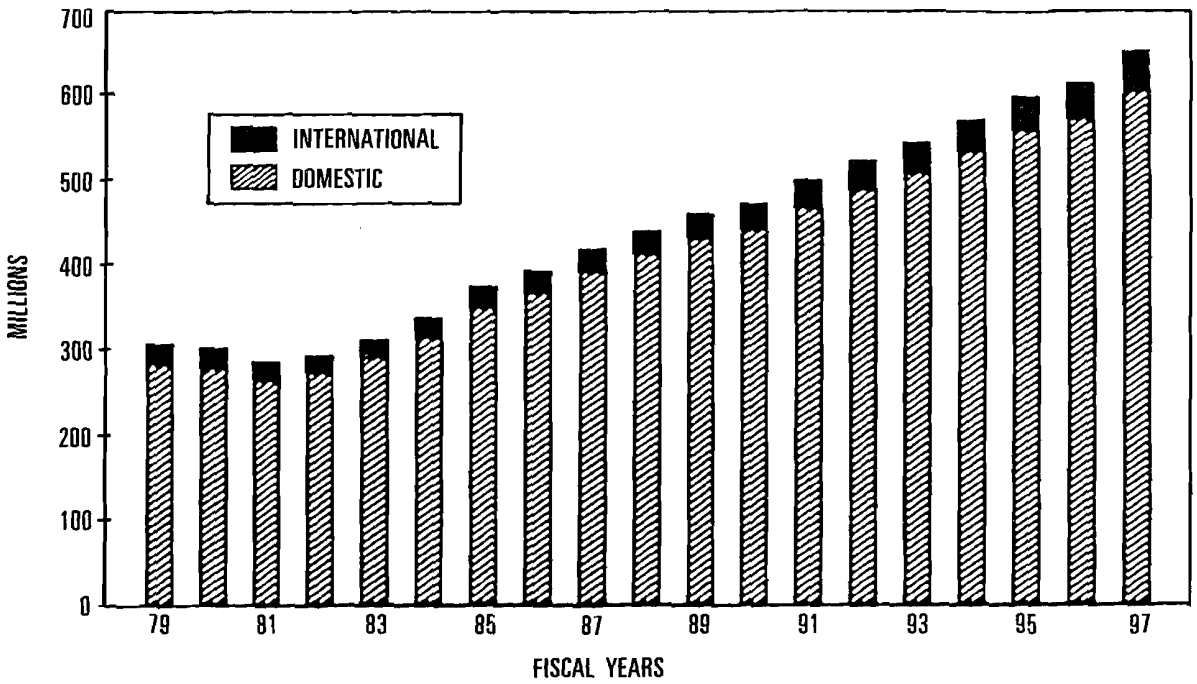

Figure 7-8. Scheduled Passenger Enplanements - Fiscal Years

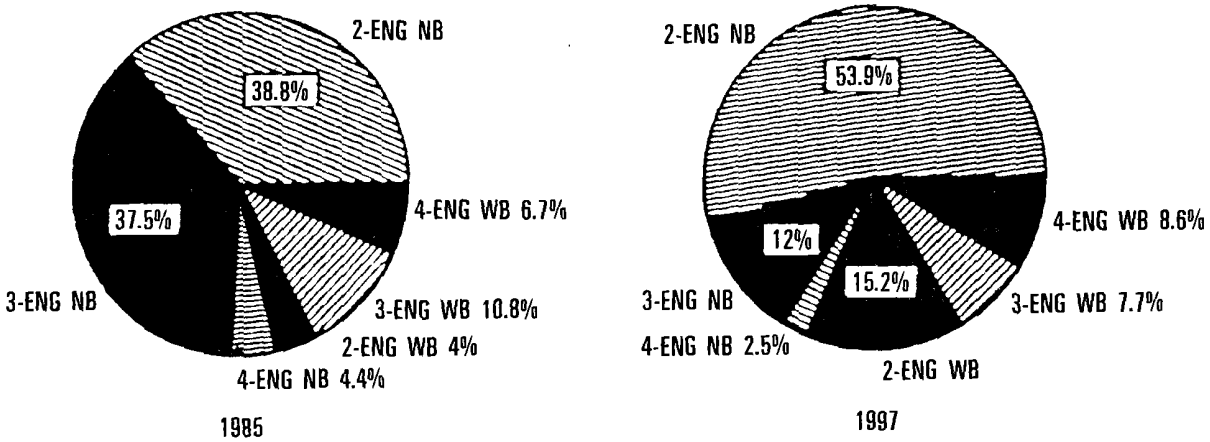

Figure 7-9. Percent by Aircraft Type

this category could account for up to an additional 37.5 fatalities/years or an increase of about 50 percent.

2. Reduction in fire-related serious injuries

The reference 3 study shows that the ratio of fire fatalities to fire-related serious injuries is 4:1. This ratio from the reference 2 study is about 2.4:1. Reference 58 reports that the average settlement of a serious injury for several accidents between 1977 and 1979 was $81,400. The same reference indicates that the FAA placed a value of $650,000 on a human life in 1984. This amount is higher than the average recovery amount of $580,000 for commercial aircraft accident fatalities from 1959 to 1982. Thus, using the FAA value, a $ ratio of about 8:1 may exist for fatality versus serious injury. Based on these to ratios (fatality/injury and life cost/injury cost) the addition of serious injuries to the potential benefits would only increase the total benefits by approximately 3 percent to 5 percent.

3. The introduction of fuel containment concepts will not totally eliminate fire fatalities. Reference 9 analysis used a 50% fire fatality reduction factor.

Considering all the factors noted in 1, 2, and 3 the estimate of 57 and 18 fatalities/year associated with wing fuel and fuselage fuel containment concepts would appear a reasonable benefit goal.

7.2 PENALTY ANALYSIS

In Section 6, the "Review of the state-of-the-art Technology" provided some indication of alternative concepts for improving both wing and fuselage fuel containment. A preliminary priority ranking of individual concepts led to some general approaches which reflected three levels of penalty/benefit relationships, namely:

1. Incorporation of crash resistant components (no bladders) - low/low
2. Wing structure modifications - high/moderate
3. Fuselage crash-resistant system - moderate/moderate

The benefit analysis in the previous section indicated that three failure modes could be identified as contributing to fuel tank rupture and fuel line severance and thus to fire fatalities. As depicted in table 7-8, from a design perspective, each of the failure modes can be considered to be affected by two or more design concept approaches. Each of the failure modes, identified in table 7-8, is addressed in the penalty analysis described in this section. Several of the design concepts described in Section 6.6 are utilized.

The penalty analysis follows the approach outlined in reference 9. The procedure is to resize the aircraft by retaining the existing range and payload while incorporating fuel containment weight penalties. The reference 9 study suggests that the reduction in payload, which is the alternative to resizing, is uneconomical by a factor of 4. The study described in reference 9 used a Convair 990 as the typical aircraft and 1969 as the base year. Data for that airplane indicated that the airplane gross weight increases 4.3 lb. for each 1.0 lb. of structural weight added (resize factor of 4.3). The current aircraft are more fuel efficient. A more suitable resize factor of 2.15 is used in this study, particularly since the trend is to the two-engine narrowbody and widebody airplanes as is noted in figure 7-9.

The concepts included in the penalty assessment are as follows:

1. Wing root modification with and without a CRFS in the wing center section
2. Wing span structural modification including crash resistant fuel cells
3. Fuselage auxiliary crash resistant fuel system

The following is a brief description of each:

- <u>Wing Root Modification to Incorporate Crash-Resistant Bladder Cells</u>
  The premise for selecting this approach is that failures in the proximity of the wing root are frequent occurrences primarily as a

result of distributed loads which produce high bending and shear loads back at the root and secondarily due to concentrated loads which can result in failure of the fuel tank. Increasing the wing root strength could prevent separation only at that location. Unfortunately, the breaks are rarely that precise. More likely the breaks leave a stub wing as shown in figure 7-10 (reference 6) and fuel spillage can occur. A design consisting of double walls at the wing break point is faced with the same problem. Furthermore, this design concept is diametrically opposed to normal design requirements which is to provide maximum strength at the point of highest anticipated load. The use of high strength integral tanks is not suggested, because this design does not address the problem, as was discussed in Section 6.6.

The approach that is suggested includes the use of a crashworthy fuel system (tank material and components) in a compartmentized segment of the wing inboard of the inboard engine and adjacent to the fuselage. Fuel spillage in this region is considered to be more lethal than from outboard tanks due to their location in proximity to the passengers. Furthermore, if wing failure separates outboard fuel tanks, then they are less likely to contribute to the fire if the airplane continues to move.

A current wide-body airplane (L-1011) is used to display the design approach. A typical wing inboard section, with wet cell fuel tanks, is shown in figure 7-11. As can be observed, the interior plumbing is extensive.

Two ways to provide fuel bladder cells in the wing along the wing root rib are examined. One method (see figure 7-12) is to install the cells in the existing bays in the wing formed by the wing ribs. The second (see figure 7-13) is to modify the wing structure to allow installation of cells of a specified width along the length of the wing root rib. While this second method would be a much larger design change, it would provide smaller bladder cells and a smaller amount of fuel contained therein.

Wing structural provisions required for the latter method to be installed in an L-1011 aircraft area:

1. Install a new wing rib parallel to existing wing root rib in the wing to form a new inboard boundary of the inboard wing tank.

2. Add tank bladder support structure to accept the new tank end rib.

3. Install three bulkheads in the wing between the existing tank end and the new tank end. These should match up with center wing bulkheads at FS 1043, FS 1103, and FS 1163.

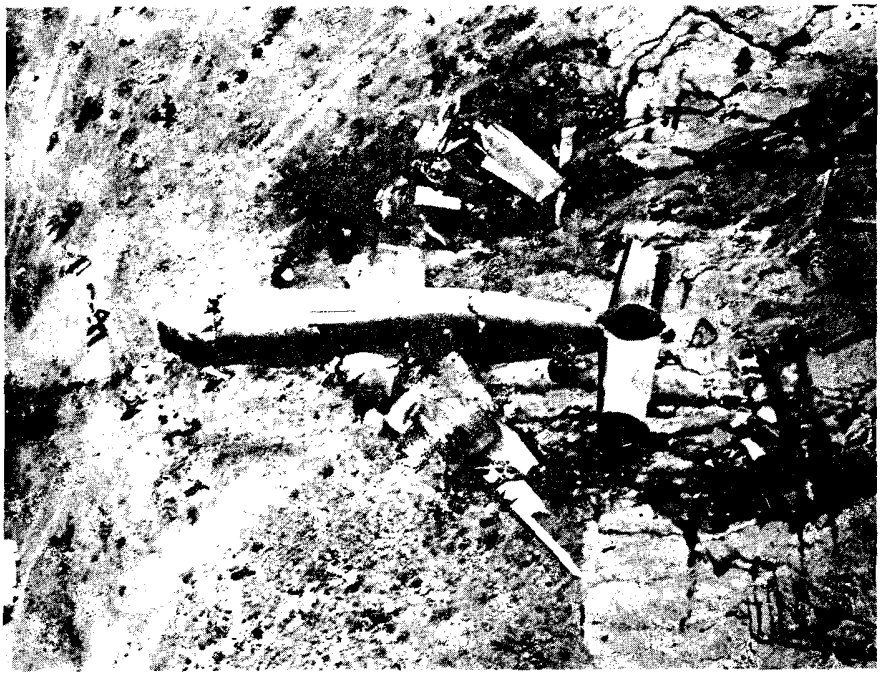

Figure 7-10. Photographs of the L1649 Crash Scene Illustrating Wing Failures and Spillage Pattern

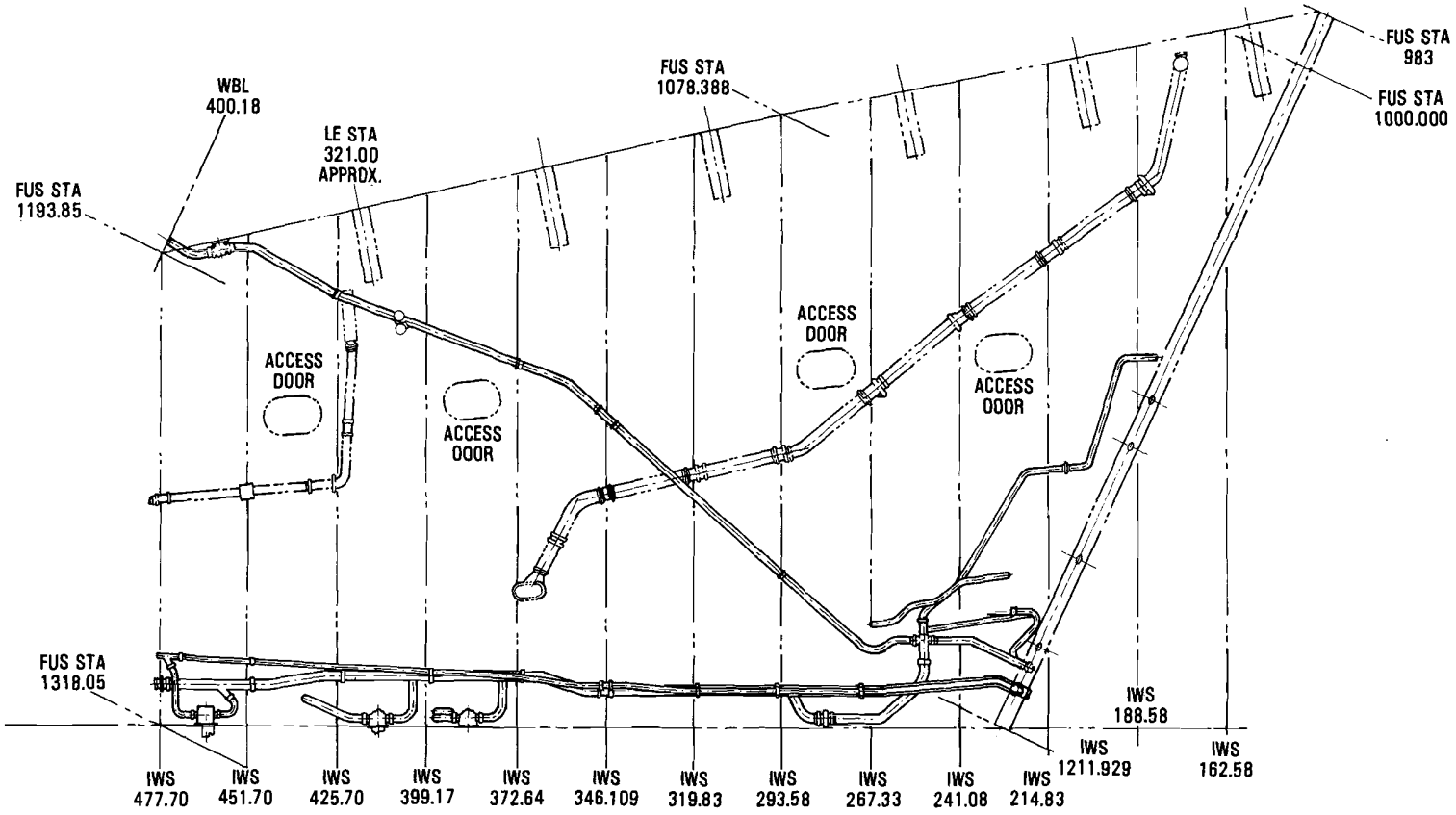

Figure 7-11. Wing Inboard Section with Wet Fuel Cells for Current Wide-body Airplane

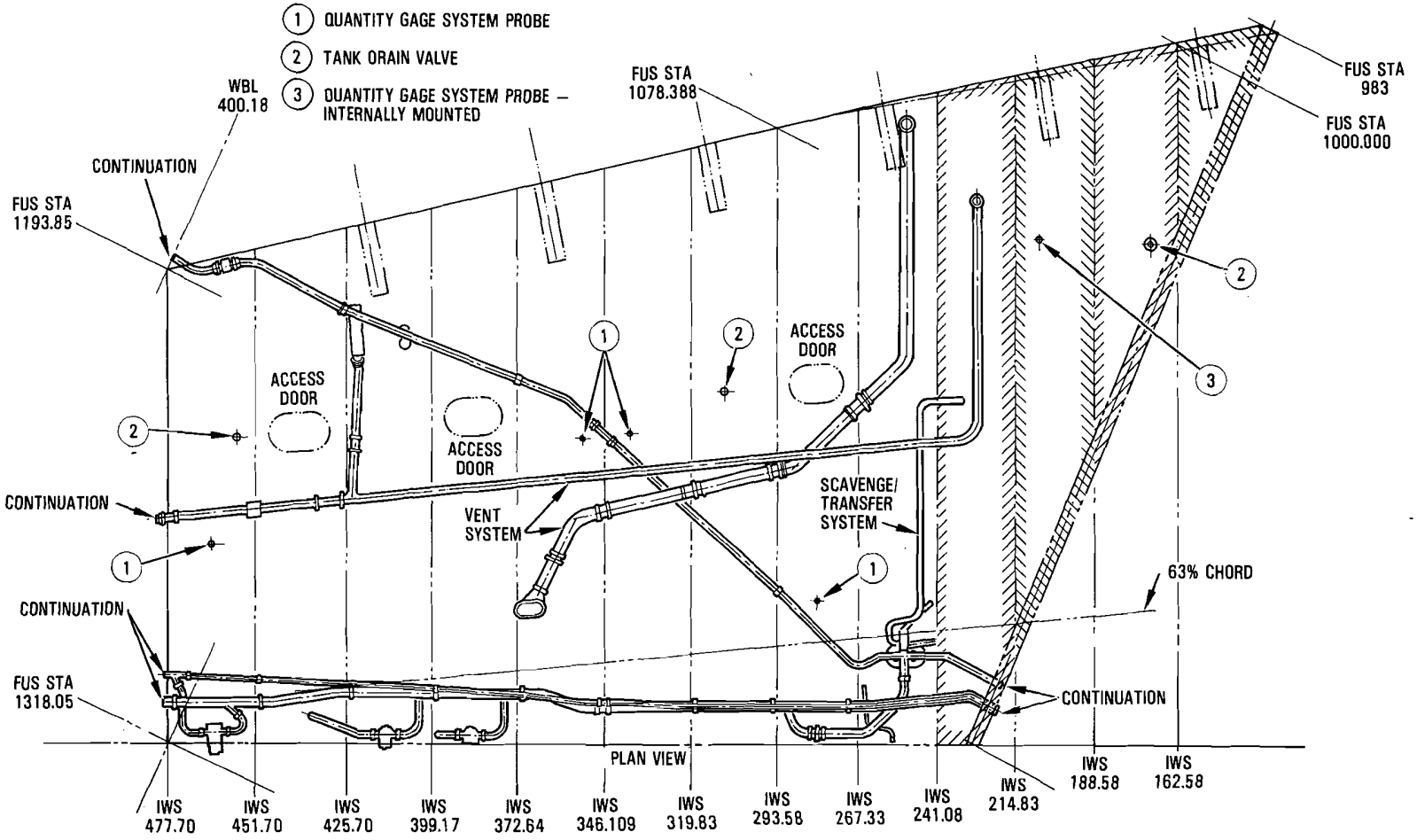

Figure 7-12. Modification of Existing Wing Inboard Section for CRFS

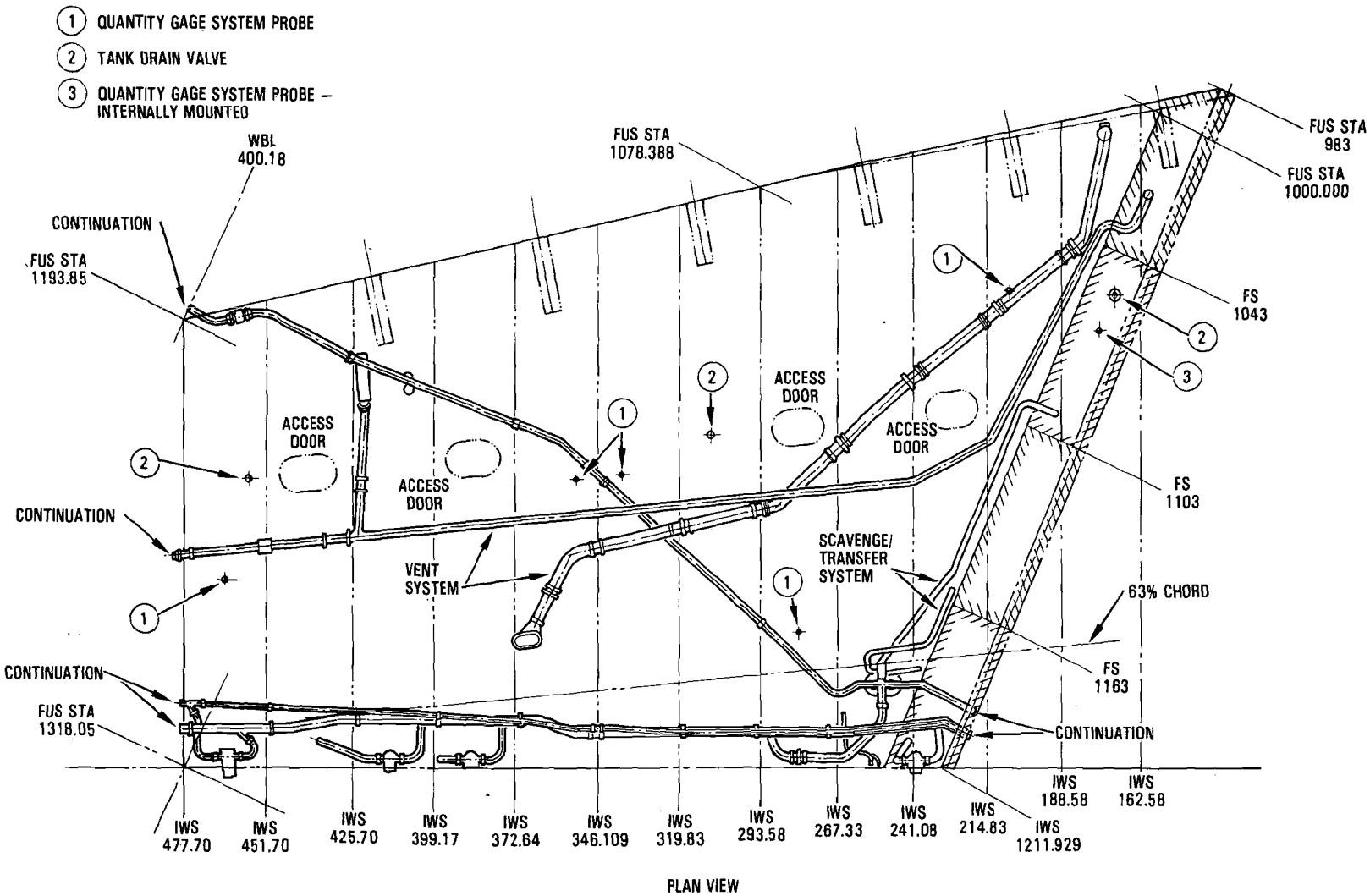

Figure 7-13. Redesign of Wing Inboard Section for CRFS

Fuel System provisions required for either method to be installed in an L1011 aircraft are:

1. Install 4 separate but interconnected bladder cells as shown in figures 7-12 and 7-13 to form an auxiliary tank in each wing. Tank design shall comply with the requirement of FAR 25.963, 25.965 and 25.967.

2. Install a fueling valve in the new tank. Assume that the compliance to FAR 25.979 is not compromised.

3. Install vent system provision in the new tank which connects with the existing adjacent wing tank vent system. The new vent system shall comply with the requirements of FAR 25.969. Relocation of the climb vent line is required on the plan that uses existing wing structure.

4. Install a scavenge/transfer system in the new tank using motive flow from the existing adjacent boost pump. These provisions shall comply with the requirements of FAR 25.957.

5. Install tank sump drains to allow drainage of excessive quantities of water from the new tank. The new sump drain provisions shall comply with the requirements of FAR 25.971.

6. Install a gravity transfer system to allow fuel flow from the new tank to the existing adjacent wing tank. This system is comprised of a series of flapper check valves through the common wall of the bladder tank and the existing wing tank.

7. Modify the existing fuel quantity gaging system to accommodate the installation of the new tank as an auxiliary tank to the existing adjacent wing tank. This modification shall not compromise the existing compliance with the applicable requirements of FAR 25.1337.

If either of the two methods were installed in a L1011 aircraft, the bladder cells construction would have to accommodate the following design features of the existing systems:

1. Quantity gaging system harness connector penetration of the bulkhead at BL116.

2. Installation of a quantity gaging system probe to an internally mounted unit in the new auxiliary tank.

3. Revise quantity gaging system harness support system through the bladder cells.

4. Existing penetrations of bulkhead at BL 116 to accommodate fueling manifold, tank 2 engine feed line and cross feed line. Additionally, if an aircraft with center section fuel tanks were used, center section motive flow line, transfer return line and quantity transfer line.

Installation of bladder cells in wing center section tanks on a L1011-500 aircraft could be accomplished using a cell for each of the three bays of each tank (figure 7-14). Adequate interconnecting provisions would have to be provided. Bladder cell penetrations would be required for all existing plumbing in the tanks. Quantity gage system wiring would have to be supported in a manner that is compatible with bladder cell design. The plumbing inside each tank (which is considerable along the rear beam at FS 121) would have to be supported in a manner that is compatible with bladder cell design. The scavenge/transfer system would require redesign of the suction tubes.

The certified capacity of both the wing and center section tanks would be reduced because of the bladder cells being out of wing plank risers and bulkhead stiffeners. The unusable fuel quantity would increase because of the location of the bladder cell interconnecting parts being above the tops of the rib caps.

- Wing Span Structural Modifications

To be completely effective, wing span structural modifications could involve a number of concepts; including leading edge protection, front spar protection, forward skin reinforcement and crash-resistant bladders and components. A major concern in the use of this concept is that unless protection is provided for an impact velocity $\geq$ 140 ft/sec the reduction in fire fatalities will be compromised. Even with protection above an impact velocity of 140 ft/sec, the use of crash-resistant fuel system is probably required to achieve the maximum reduction in fire fatalities. Several concepts to be considered in this approach, such as front spar protection (figure 5-4(a)) and redesign of upper and lower skins (figure 5-3(b)) have been discussed previously. Structural reinforcement which includes heavier spar rails, added chordwise stiffeners and thicker skins with and without the addition of foam/film to protect and encase were described in reference 5. The concepts presented in Reference 5 are intended to reduce impact damage due to contact with trees, rocks and other penetrating obstacles. Tests of similar structure have been performed for impact speeds up to 44 ft/sec and with wooden poles up to 17 inches in diameter. The use of foam/film is intended to allow normal fuel flow but provide a barrier to rapid flow out of a rupture in the fuel tank cell. Concern in the use of foam is discussed in Section 6.6 and resulted in this concept being rated poorly and, thus, ranked low in relation to other concepts. The redesigned skin concepts are discussed in Section 6.6. They provide good impact resistance but could be difficult to manufacture. Good impact

resistance is a relative term. The design would have to be effective at an impact velocity of at least 140 ft/sec.

- Crash Resistant Fuselage Auxiliary Fuel Tank System

Auxiliary fuel tanks are in use in several transport airplanes. These systems are discussed in Section 5.2. The crash resistant bladder supported in a dedicated structural box is being considered in this study. The assumption is that crash resistant systems will be used in lieu of existing non-crashworthy systems. Figure 7-15 shows a typical arrangement that would be required for an auxiliary fuselage tank. The various vents, valves, and pumps would have to be provided in the interconnecting tanks. The effect of a fail-closed mode of any self-sealing devices used in the forward lines in a fuel system which are noted below is applicable not only to fuselage tank but wing fuel tanks also.

System	Effect
• Fueling manifold line	Unable to refuel tank on the ground.
• Engine feed lines	Loss of use of fuel in the tank. Possible loss of engine power.
• Tank vent lines	Possible collapse of tank structure.
• Jettison lines	Loss of jettison capability.
• Scavenge/transfer lines	Loss of use of fuel in a section of the tank. Increase in unusable fuel.

7.2.1 Weight Penalties

Reference 57 provides data which indicates current and trends with regard to transport airplane fleet mixes. For example table 7-11 shows airplane fleet mixes for 1985 and projected for 1997. The average size with regard to passengers in the fleet is expected to increase from 145 seats to 180 seats during that time span.

Since the fleet will consist of a range of airplane sizes, the weight penalties will vary substantially from model to model. Accordingly, it was decided that the weight penalties would be more appropriately determined from the "representative" aircraft which is a 2 engine narrow body model. This type of aircraft is expected to represent 53.9 percent of the U.S. commercial

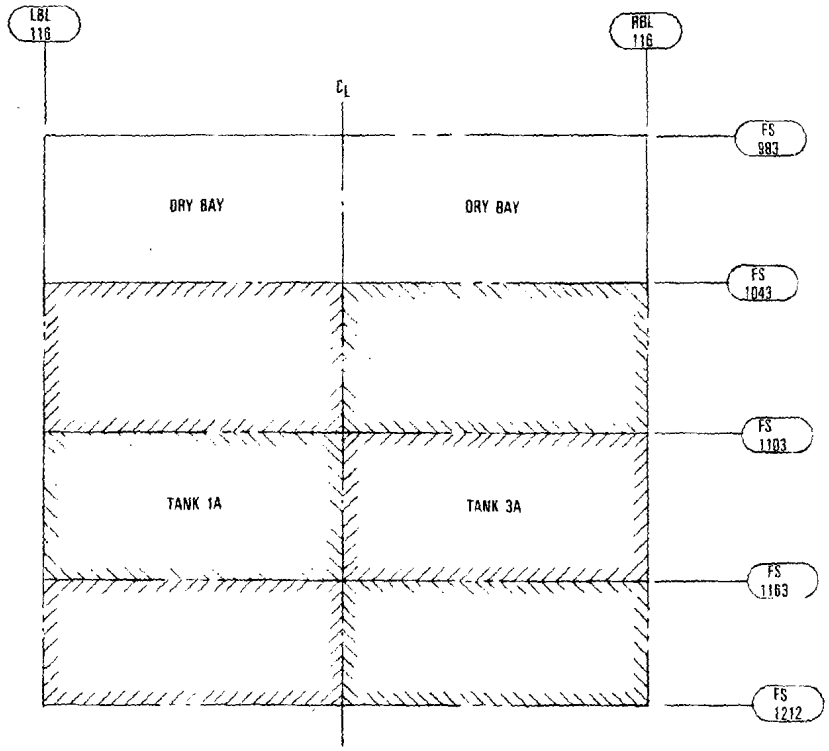

Figure 7-14. Center Section Tanks for Current Wide-body Airplane

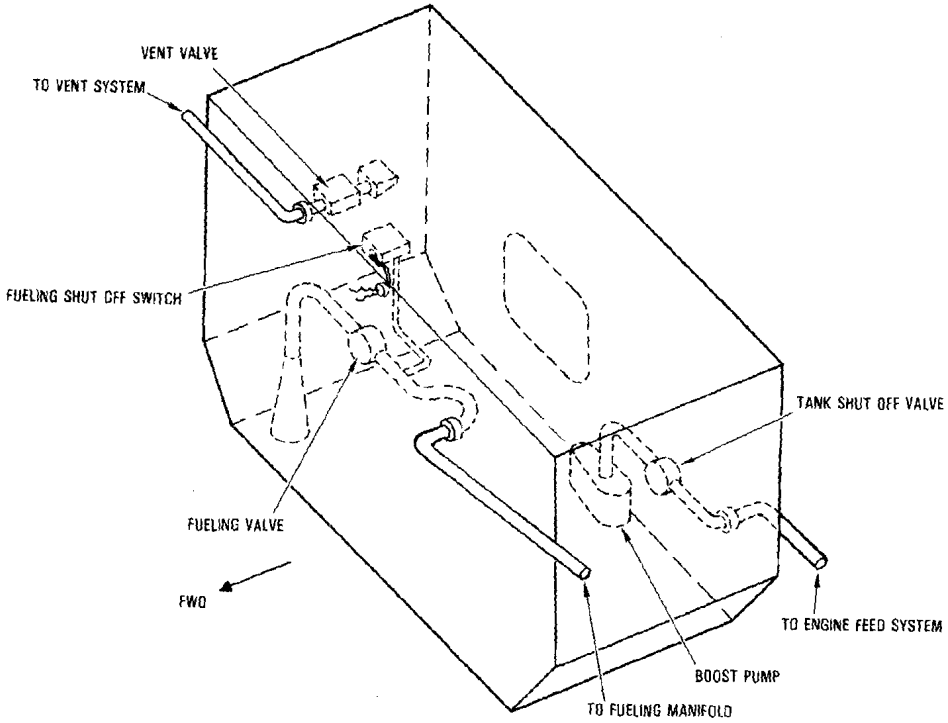

Figure 7-15. Typical Fuselage Auxiliary Tank Arrangement

fleet in 1997. For purposes of calculations in this section the following premises are made:

- The representative airplane is a 2 engine narrow-body aircraft of the following parameters:

  156 - passengers
  150,000 lb. - GTOW
  75,000 lb. - OEW
  8,500 gal - Total fuel tanks capacity
  2500 gal. aux. fuselage fuel tank
  3000 gal. wing center fuel tank
  3000 gal. wing outboard fuel tank

- CRFS (bladder material and fittings) requires .4 lb/gal. weight increase over non-bladder type tank. The associated weights calculated for a different size airplane are scaled to the representative 2 engine narrowbody configuration by the ratio of the fuel tank capacities.

- The CRFS reduces fuel volume by 10 percent

- A resizing factor of 2.15 is used

A summary of weight/volume penalties associated with a CRFS are shown in figure 7-16. Included in figure 7-16 is the weight penalty range for various aircraft configurations obtained from referenced test and analysis data, as well as the values used in this current study.

TABLE 7-11. U. S. COMMERCIAL FLEET MIX

TOTAL NO. AIRPLANES DISTRIBUTION	1985 3000 PERCENTAGE (%)	1997 4000 PERCENTAGE (%)	TYPICAL MODELS
2 Engine/NB	36.6	53.9	MD-80,B737-300
4 Engine/WB	6.7	8.6	B747
3 Engine/WB	10.8	7.7	DC-10,L1011,MD-11
4 Engine/NB	4.4	2.5	DC-8,B707
3 Engine/NB	37.5	12.0	B727
2 Engine/WB	4.0	15.2	B767,A320,A310
NB = Narrowbody WB = Widebody			

AIRCRAFT	IMPACT VELOCITY FT./SEC.	FUEL LOSS (% VOL.)	BLADDER MATERIAL WEIGHT INCREASE			
			(% DRY WING)	(% GTOW)	(#/GAL.)*	(#/GAL.)**
TRANSPORT WING – TEST	110 – 130	7.0 – 15.0	3.0 – 5.4	2.0 – 3.0	–	– 0.38
HELICOPTER – MIL.	65	– 5.0	–	1.0 – 2.4	0.58 – 0.67	0.42 – 0.57
– COM'L	56	–	–	0.8 – 1.2	0.30 – 0.34	0.14 – 0.19
GEN. AVIAT. – TEST	95	2.8 – 7.4	–	– 1.0	–	0.20 – 0.44
– ANALYSIS	–	8.0 – 14.0	–	2.0 – 3.0	0.38 – 0.63	–
USED IN CURRENT STUDY	⩽130	10.0	5.0	3.0	0.40	0.20

*WET CELL

**REPLACE EXISTING BLADDER

Figure 7-16. Summary of Weight/Volume Penalty - CRFS

The fuel capacities used are slightly higher than current generation 2-engine narrowbody airplanes, as is the number of passengers and GTOW. The auxiliary fuel tank capacity is based on a B727 configuration. It may be higher than that used in other 2 engine narrowbody airplanes.

Table 7-12 shows the estimated weight penalties for the various concepts. The weights were estimated as follows:

1. Wing Root Modifications

A L1011 widebody design was used as a baseline configuration from which existing structure would be modified or redesigned as shown in figures 7-10 and 7-11. The L1011 fuel tank capacities are approximately:

Center section tank	- 8100 gal.
Inboard tanks	- 16100 gal.
Outboard tanks	- 7660 gal.

The estimated fuel quantity for which a CRFS would be installed near the root is estimated at 2618 gallons/side (5236 gal. total). Using about 1/4 the fuel capacity for a "representative" airplane results in about 1300 gal. for the modified design. The redesign involves less area of the inboard wing and thus about 650 gal. is used in the calculations. By the same token the redesign may afford less protection for fire fatality reductions, which was recognized previously in the assignment of benefits. About 250 lb. of structural weight is included for both the modified designs and redesign to account for compartmentization of the fuel cells. The wing center section fuel section is taken as 2000 gallons since 1000 gallons was assigned to the inboard tank. This figure also represents about 1/4 of the wing center tank capacity of the baseline L1011.

2. Wing Span Modification and CRFS

The structural weight estimates for this concept comes from CV990 study (ref. 9). These estimates were doubled to account for increased skin gauges and stiffeners to resist higher impact velocities. The reference - study also provided for 770 lb. foam. The current concept disregards the use of foam but utilizes a CRFS. The fuel capacity of the wing tanks (3000 gal.) is used. The compartmentizing of the fuel cells requires structural weight to be added in addition to the wingspan front spar and leading edge changes. Thus, the total structural weight used is 3 times the reference 9 estimates.

TABLE 7-12. ESTIMATED WEIGHT PENALTIES

Concept	Fuel Quantity (gal)	Fuel Loss (10%) (gal)	Weight Added (lb/Airplane)				Weight for 2.15 Resize Factor
			Structure	CRFS @ .4 lb/gal	Fuel Loss @ .4 lb/gal	Total	
1. Wing Root Modifications							
a. Existing Design	1300	130	250	520	52	722	1552
b. Centersection CRFS	2000	200	--	800	80	880	1892
c. (a+b)	3300	330	250	1320	132	1702	3659
2. Wing Span Modification Structural Reinforcement and CRFS	3000	300	760	1200	120	2080	4472
3. Fuselage Auxiliary Tanks							
a. CRFS Tank Mat'l.	2500	250	--	750	100	850	1827
b. CRFS Components	--	--	--	250	--	250	538
c. a & b	2500	250	--	1000	100	1100	2365
4. CRFS - Through (1b+2+3)	7500	750	760	3000	300	4060	8729
5. Wing Root Modification & CRFS for Auxiliary Fuel Tank & Wing Center Section (1c+3)	5800	580	250	2320	232	2570	5525

3. Crash Resistant Fuselage Auxiliary Fuel Tanks

The weight penalty associated with this concept is strictly .40 lb/gal. x fuel quantity. No structural weight is considered other than in resizing to maintain payload and range. The implementation of this concept is easier than in the wings because space limitation is not as severe. For fuel tanks with engine non-crash resistant bladders the penalties might be reduced by a factor of 2.0.

Table 7-12 is organized such that the three major concepts as well as combinations are presented. Where fuel volume loss is indicated an additional penalty of .40 lb/gal x volume loss for additional fuel contained in crash resistant cell is included. The last column shows the weight for the 2.15 resizing factor.

7.2.2 Cost Penalties

Costs for the incorporation of each of the concepts would include nonrecurring (tooling, design, manufacture) recurring (fabrication, material, engineering support, insurance, etc.) and fuel operating costs. These typesof costs were assessed by the Aerospace Industries Association (AIA) in a recent response to strength rule changes (reference 59). For two levels of structural modifications the arrival cost distribution was estimated in current 1986 dollars to be in $ per lb. per annum as follows:

nonrecurring:	63.00	69.00
recurring:	27.00	27.00
fuel:	12.00	12.00
	102.00	108.00

Since the reference 59 estimates are current it is reasonable to expect the modifications noted in this study to be in the same region. The most significant differences would probably be associated with tooling and testing of major structural changes such as wing root redesign or wing span redesign as opposed to installation of a CRFS in the fuselage auxiliary tank. The reference 9 cost study was performed for a four engine jet transport (CV990) in which 380 lb. of structural and foam weight was to be added. A comparison of the 1969 dollars/lb. associated with that study and the 1986 dollars/lb. for the current study is noted as follows:

Costs	1969 study ($/lb)	1986 study ($/lb)
estimated nonrecurring	22.50	63.00
fly-away recurring	9.60	27.00
operating fuel	4.40	12.00
	$36.50	$102.00

The nonrecurring 1969 costs were estimated using the same ratio that exists between the other cost comparisons. The 1986 cost figures are 2.8 times greater than the 1969 cost figures. This represents approximately a 6 percent increase per annum over the last 17 years. The 1986 figures would appear to be representative in light of the 1969 costs. The design concepts which would have a lesser impact on nonrecurring costs, such as a fuselage CRFS (wing center section and auxiliary tank) could be at the lower end of the cost spectra ($80/lb - $100/lb), while the major structural changes (wing modifications) are probably at the higher end ($100/lb - $120/lb). For purposes of this study in which a comparative assessment of concepts is being made, cost factors of 1.0 and 1.5 will be assigned on the basis of relative complexity to cover a range from a low of $80/lb to a high of $120/lb.

7.3 WEIGHT PENALTY VERSUS POTENTIAL FATALITY REDUCTION

The estimates of weight penalty versus potential fatality reduction is shown in table 7-13. From table 7-13 it can be noted that the last column which denotes the ratio of weight versus potential reduction is an indication of efficiency of concepts. The lower the ratio the more desirable the change from a weight approach. For the data presented, the individual concepts 3b and 1a are lowest and concept 2 is highest. Combinations of concepts fall between the extremes since they represent weighting factors.

The estimates including cost factors assigned to the respective concepts are also shown in table 7-13. Once again the lowest ratio is most desirable. On a relative basis the sequential order from a cost effectivity viewpoint is concept 3 followed by concepts 1 and 2.

TABLE 7-13. PENALTY VS. POTENTIAL FATALITY REDUCTION

Concept	Cost Factor	Per Annum Penalty			Per Annum	Ratio of Fleet Penalty to Fatality Reduction	
		Weight per Airplane (lb)	Fleet Weight lb x 10^6	Fleet* Cost x 10^6	Fatality Reduction Potential	Weight x 10^6	Cost x 10^6
1. Wing Root Modifications							
a. Structural Change	1.5	1552	.54	.82	13.0	.042	.063
b. Centersection CRFS	1.25	1892	.66	.83	13.0	.050	.064
c. (a+b)	-	3654	1.20	1.65	26.0	.046	.063
2. Wing Span Modification Structural Reinforcement and CRFS	1.5	4472	1.57	2.35	21.9	.072	.107
3. Fuselage Auxiliary Tanks							
a. CRFS Tank Material	1.0	1774	.62	.64	9.0	.073	.073
b. CRFS Components	1.0	591	.21	.21	9.0	.023	.023
c. (a & b)	1.0	2365	.83	.83	18.0	.046	.046
4. Wing Span (1b+2+3) + CRFS Tank & Components	-	8729	3.06	4.01	52.9	.058	.076
5. Wing Root Modification & Fuselage CRFS (1c+3c)	-	6019	2.03	2.48	44.0	.046	.056

*Based on 3500 airplanes over 10 year period. Use 350 airplanes per annum.
**Penalties based on resized airplane.

The numbers in table 7-13 reflect both a subjective assessment of benefit distribution and relative cost factor evaluation. Obviously, the numbers could change with moderate reassessments. However, slights changes in benefit and cost would not alter the fact that table 7-13 suggests that wing span structural modifications including a CRFS will be the least effective approach while a CRFS for the fuselage auxiliary tanks and wing root structural modifications provide potentially the most effectiveness.

SECTION 8
CONCLUSIONS

CONCLUSIONS

- The major factor in survivable crash related fatalities are fire and smoke
- No individual design concept can be expected to reduce all fire fatalities
- The greatest gain in crashworthiness protection might result from containment of fuel with fuel systems which are more resistant to tears, rupture and puncture along with protection from penetration loads
- Design Concept Effectivity can be measured in terms of the benefit to penalty ratio that can be achieved
- Fuselage fuel containment concepts are more practically attainable than wing fuel containment concepts primarily because they are more state-of-the-art and thus less potentially costly
- The application of crashworthy bladder tanks to integral wing tanks cannot be accomplished without a complete redesign of the wing because of its multicellular construction

REFERENCES

1. Widmayer, E., and Brende, O., "Commercial Jet Transport Crashworthiness," Boeing Commercial Airplane Company, NASA Contractor Report 165849, FAA Report DOT-FAAOCT-82/68, March 1982.

2. Cominsky, A., "Transport Aircraft Accident Dynamics," Douglas Aircraft Company, NASA Contractor Report 165850, FAA Report No. DOT-FAA-CT-82/70, March 1982.

3. Wittlin, G., Gamon, M. A., and Shycoff, D. L., "Transport Aircraft Crash Dynamics," Lockheed-California Company, NASA Contractor Report 165851, FAA Report DOT-FAA-CT-82/69, March 1982.

4. Caiafa, C., and Thomson, R. G., "Structural Response of Transport Airplanes in Crash Situations," NASA Technical Memorandum 85654, June 1983.

5. Chandler, R. F., and Neri, L. M., "Crash Fire Protection in Survivable Air Transport Accidents - U.S. Civil Aircraft Experience from 1970 to 1978," DOT/FAA/CT-82-118, March 1983.

6. Cominsky, A., et al, "Study of Aircraft Crashworthiness for Fire Protection," McDonnell Douglas Corp., N81-24035, January 1981.

7. Enders, J. H., and Wood, E. C., "Final Report of the Special Aviation Fire and Explosion Reduction (SAFER) Advisory Committee," FAA ASF-80-4, June 1980.

8. Sandifer, J. P., "Fuel Containment and Damage Tolerance in Large Composite Primary Aircraft Structures" - Contract NAS1-16856, December 1982.

9. Greer, D. L., and Kanpton, W. E., "Cost/Benefit Analysis for Incorporating Crash Resistant Fuel Tanks in Civil Jet Transport Aircraft," FAA-05-70-15, May 1970.

10. Nissley, P. M., and Heid, T. C., "Structural Design for Fuel Containment Under Survivable Crash Conditions," FAA-TR-ADS-19, August 1964.

11. Robinson, K. D., "An Investigation of Methods to Control Post-Crash Fuel Spill from Integral Fuel Tanks," FAA-RD-71-75, December 1971.

12. Schauerman, H. P., "Crash Resistant Fuel Systems Demonstration and Evaluation," FAA-RD-71-27, August 1971.

13. Reed, W. H. et al, "Full-Scale Dynamic Crash Test of a Lockheed Constellation Model 1649 Aircraft," FAA Technical Report ADS-38, October 1965.

REFERENCES (CONTINUED)

14. Reed, W. H., et al, "Full-Scale Dynamic Crash Test of a Douglas DC-7 Aircraft," FAA Technical Report ADS-37, April 1965.

15. Johnson D., Gardoz L., "Crashworthiness Experiment Summary Full-Scale Transport Controlled Impact Demonstration Program", DOT/FAA/CT-85/20, June 1986.

16. Pugliese, S. M., "707 Fuselage Drop Test Report," Report No. 7252-1, Arvin/Calspan Report prepared for the FAA Technical Center, Atlantic City, NJ, March 1984.

17. Hayduk, R., Williams, S., "Vertical Drop Test of a Transport Fuselage Section Located Forward of the Wing," NASA TM 85679, National Technical Service, Springfield, VA, August 1983.

18. "DC-10 Fuselage Drop Test Report," Report No. 7251-2, Arvin, Calspan Report prepared for the FAA Technical Center, Atlantic City, NJ, September 1984.

19. Williams, S. A., Hayduk, R. J., "Vertical Drop Test of a Transport Fuselage Center Section Including the Wheel Wells," NASA TM 85706, October 1983.

20. Wittlin, G., LaBarge, W. L., "KRASH Dynamic Analysis Modeling-Transport Airplane Controlled Impact Demonstration Test," DOT/FAA/CT-85/9, May 1985.

21. Wittlin, G., "KRASH Analysis Correlation, Transport Airplane Controlled Impact Demonstration Test," DOT/FAA/CT-86/13, December 1986.

22. Wittlin, G., "KRASH Parameter Sensitivity Study - Transport Category Airplanes," DOT/FAA/CT-87/13, November 1987.

23. Greer, D. L., et al, "Design Study and Model Structures Test Program to Improve Fuselage Crashworthiness," FAA Technical Report DS-67-20, October 1967.

24. Buckson, W., et al, "Design, Development and Evaluation of a Crash Resistant Fuel System Installation," FAA Technical Report ADS-27, December 1965.

25. Ahlers, P. H., "Investigation of Two Methods for Improving the Crashworthiness of Integral Fuel Tanks," FAA-RD-70-56, November 1970.

26. Hackler, L. W., "Wing Leading Edge Fuel Tank Impact Tests," FAA-RD-72-83, October 1972.

27. "Aircraft Crash Survival Design Guide," Simula, Inc., USARTL-TR-79-22A-E, December 1980.

REFERENCES (CONTINUED)

28. Johnson, N. B., "Crashworthy Fuel System Design Criteria and Analyses," USAAVLABS-TR-8, March 1971.

29. Byerly, D. L., "Evaluation of Various Sizes and Configurations of Fuel Tanks," USAAMRDL-TR-73-74, December 1973.

30. Vikestad, W., and Pard, E. M., "Evaluation of Candidate Crash Resistant Self-Sealing Aircraft Fuel Tank Materials," USAAMRDL-TR-72-70, November 1972.

31. Johnson, N. B., "Fuel System Reliability and Maintainability Investigation," USAAMRDL-TR-74-51A-51B, July 1974.

32. Anson, B., "Evaluation of Self-Sealing Breakaway Valves for Crashworthy Aircraft Fuel Systems," USAAMRDL-TR-71-65, November 1971.

33. Robertson, S. H., "Development of a Crash-Resistant Flammable Fluids System for the UH-1A Helicopter," USAAVLABS-TR-68-82, January 1969.

34. Cook, R. L., and Goebel, D. E., "Evaluation of the UH-1D/H Helicopter Crashworthy Fuel System in a Crash Environment," USAAMRDL-TR-71-47, November 1971.

35. Perrella, W. M., Jr., "Test of Crash-Resistant Fuel System for General Aviation Aircraft - Interim Report," FAA-RD-78-28, March 1978.

36. Perrella, W. M., Jr., "Tests of Crash-Resistant Fuel System for General Aviation Aircraft - Final Report," FAA-RD-78-122, December 1978.

37. NTSB-AAS-80-2, "General Aviation Accidents: Post-Crash Fires and How to Prevent or Control Them - A Special Study," August 1980.

38. NTSB/SR-83/01, "General Aviation Crashworthiness Project, Phase A - Special Report," June 1983.

39. Ellis, D. A., and Koch, L. C., "Development of Survivable Crash-Resistant Integral Fuel Tank Composite Fuselage Structure, Phase I Results," NADC-81129-60, December 1982.

40. Kuchta, J. M., Clodfelter, R. G., "Aircraft Mishap Fire Pattern Investigations," AFWAL-TR-85-2057, August 1985.

41. Andrenuici, M., "The Use of Rockets Against Crash Fires in Airport Areas," AGARD-CR-166, Aircraft Fire Safety, Rome, Italy, April 1975.

42. Vincent, J., "Fire Protection of Military Aircraft," AGARD-CR-166, Aircraft Fire Safety, Rome, Italy, April 1975.

REFERENCES (CONTINUED)

43. Botteri, B. P., "Aircraft Fire Protection Technology," AGARD-CP-166, Aircraft Fire Safety, Rome, Italy, April 1975.

44. Fiala, R., et al, "On the Applicability of Reticulated Foams for the Suppression of Fuel Tank Explosions," AGARD-CP-166, Aircraft Fire Safety, Rome, Italy, April 1975.

45. MacDonald, J. A., and Wyeth, H. W., "Fire Protection of Fuel Systems in Combat Aircraft," AGARD-CP-166, Aircraft Fire Safety, Rome, Italy, April 1975.

46. MIL-STD-1290, "Light Fixed and Rotary Wing Aircraft Crashworthiness."

47. MIL-T-27422B, "Aircraft Crash-Resistant Fuel Tank."

48. MIL-A-8865A, "Airplane Strength and Rigidity Miscellaneous Loads."

49. AR-56, "Structural Design Requirements."

50. FAR-25, "Airworthiness Standards: Transport Category Airplanes."

51. FAR-121, "Certification and Operations; Domestic Flag and Supplemental Air Carriers and Commercial Operation of Large Aircraft."

52. Air Registration Board - British Civil Airworthiness Requirements; Subsection D3 - Structures; Revised Jan 1951.

53. Advisory Circular, "Auxiliary Fuel System Installations," March 13, 1985.

54. "Foam Fires in Fuel Tanks," Flying Safe, August 1984.

55. AC-25-8, "Advisory Circular - Auxiliary Fuel System Installation," May 1986

56. Fox, R.G., "Realistic Civil Helicopter Crash Safety," AHS National Specialists Meeting, Atlanta, Ga., April 1986

57. FAA Report APO-86-1, Feb 1986, "Economic Analysis of Commercial Airline Operations - Annual Report."

58. Cannon, M.R., Zimmerman, R.E., "Transport Controlled Impact Demonstration Seat Experiments and Cost/Benefit Study," DOT/FAA/CT-85/36, Oct. 1986

59. AIA Comments on Docket No. 25040, Notice 110. 86-111 Improved Seat Safety Standards, Jan 14, 1987

APPENDIX A

LITERATURE SURVEY REPORTS

1. Widmayer, E., and Brende, O., "Commercial Jet Transport Crashworthiness," Boeing Commercial Airplane Company, NASA Contractor Report 165849, FAA Report DOT-FAAOCT-82/68, March 1982.

2. Cominsky, A., "Transport Aircraft Accident Dynamics," Douglas Aircraft Company, NASA Contractor Report 165850, FAA Report No. DOT-FAA-CT-82/70, March 1982.

3. Wittlin, G., Gamon, M. A., and Shycoff, D. L., "Transport Aircraft Crash Dynamics," Lockheed-California Company, NASA Contractor Report 165851, FAA Report DOT-FAA-CT-82/69, March 1982.

4. Caiafa, C., and Thomson, R. G., "Structural Response of Transport Airplanes in Crash Situations," NASA Technical Memorandum 85654, June 1983.

5. Chandler, R. F., and Neri, L. M., "Crash Fire Protection in Survivable Air Transport Accidents - U.S. Civil Aircraft Experience from 1970 to 1978," DOT/FAA/CT-82-118, March 1983.

6. Cominsky, A., et al, "Study of Aircraft Crashworthiness for Fire Protection," McDonnell Douglas Corp., N81-24035, January 1981.

7. Enders, J. H., and Wood, E. C., "Final Report of the Special Aviation Fire and Explosion Reduction (SAFER) Advisory Committee," FAA ASF-80-4, June 1980.

8. Sandifer, J. P., "Fuel Containment and Damage Tolerance in Large Composite Primary Aircraft Structures" - Contract NAS1-16856, December 1982.

9. Greer, D. L., and Kanpton, W. E., "Cost/Benefit Analysis for Incorporating Crash Resistant Fuel Tanks in Civil Jet Transport Aircraft," FAA-05-70-15, May 1970.

10. Nissley, P. M., and Heid, T. C., "Structural Design for Fuel Containment Under Survivable Crash Conditions," FAA-TR-ADS-19, August 1964.

11. Robinson, K. D., "An Investigation of Methods to Control Post-Crash Fuel Spill from Integral Fuel Tanks," FAA-RD-71-75, December 1971.

12. Schauerman, H. P., "Crash Resistant Fuel Systems Demonstration and Evaluation," FAA-RD-71-27, August 1971.

13. Reed, W. H. et al, "Full-Scale Dynamic Crash Test of a Lockheed Constellation Model 1649 Aircraft," FAA Technical Report ADS-38, October 1965.

14. Reed, W. H., et al, "Full-Scale Dynamic Crash Test of a Douglas DC-7 Aircraft," FAA Technical Report ADS-37, April 1965.

15. Johnson, D., Gardoz, L., "Crashworthiness Experiment Summary Full-Scale Transport Controlled Impact Demonstration Program," DOT/FAA/CT-85/20, June 1986.

16. Pugliese, S. M., "707 Fuselage Drop Test Report," Report No. 7252-1, Arvin/Calspan Report prepared for the FAA Technical Center, Atlantic City, NJ, March 1984.

17. Hayduk, R., Williams, S., "Vertical Drop Test of a Transport Fuselage Section Located Forward of the Wing," NASA TM 85679, National Technical Service, Springfield, VA, August 1983.

18. "DC-10 Fuselage Drop Test Report," Report No. 7251-2, Arvin, Calspan Report prepared for the FAA Technical Center, Atlantic City, NJ, September 1984.

19. Williams, S. A., Hayduk, R. J., "Vertical Drop Test of a Transport Fuselage Center Section Including the Wheel Wells," NASA TM 85706, October 1983.

20. Wittlin, G., LaBarge, W. L., "KRASH Dynamic Analysis Modeling-Transport Airplane Controlled Impact Demonstration Test," DOT/FAA/CT-85/9, May 1985.

21. Wittlin, G., "KRASH Analysis Correlation, Transport Airplane Controlled Impact Demonstration Test," DOT/FAA/CT-86/13, December 1986.

22. Wittlin, G., "KRASH Parameter Sensitivity Study - Transport Category Airplanes," DOT/FAA/CT-87/13, November 1987.

23. Greer, D. L., et al, "Design Study and Model Structures Test Program to Improve Fuselage Crashworthiness," FAA Technical Report DS-67-20, October 1967.

24. Buckson, W., et al, "Design, Development and Evaluation of a Crash Resistant Fuel System Installation," FAA Technical Report ADS-27, December 1965.

25. P. H. Ahlers, "Investigation of Two Methods for Improving the Crashworthiness of Integral Fuel Tanks," FAA-RD-70-56, November 1970.

26. L. W. Hackler, "Wing Leading Edge Fuel Tank Impact Tests," FAA-RD-72-83, October 1972.

27. "Aircraft Crash Survival Design Guide," Simula, Inc., USARTL-TR-79-22A-E, December 1980.

28. Johnson, N. B., "Crashworthy Fuel System Design Criteria and Analyses," USAAVLABS-TR-8, March 1971.

29. Byerly, D. L., "Evaluation of Various Sizes and Configurations of Fuel Tanks," USAAMRDL-TR-73-74, December 1973.

30. Vikestad, W., and Pard, E. M., "Evaluation of Candidate Crash Resistant Self-Sealing Aircraft Fuel Tank Materials," USAAMRDL-TR-72-70, November 1972.

31. Johnson, N. B., "Fuel System Reliability and Maintainability Investigation," USAAMRDL-TR-74-51A-51B, July 1974.

32. Anson, B., "Evaluation of Self-Sealing Breakaway Valves for Crashworthy Aircraft Fuel Systems," USAAMRDL-TR-71-65, November 1971.

33. Robertson, S. H., "Development of a Crash-Resistant Flammable Fluids System for the UH-1A Helicopter," USAAVLABS-TR-68-82, January 1969.

34. Cook, R. L., and Goebel, D. E., "Evaluation of the UH-1D/H Helicopter Crashworthy Fuel System in a Crash Environment," USAAMRDL-TR-71-47, November 1971.

35. Perrella, W. M., Jr., "Test of Crash-Resistant Fuel System for General Aviation Aircraft - Interim Report," FAA-RD-78-28, March 1978.

36. Perrella, W. M., Jr., "Tests of Crash-Resistant Fuel System for General Aviation Aircraft - Final Report," FAA-RD-78-122, December 1978.

37. NTSB-AAS-80-2, "General Aviation Accidents: Post-Crash Fires and How to Prevent or Control Them - A Special Study," August 1980.

38. NTSB/SR-83/01, "General Aviation Crashworthiness Project, Phase A - Special Report," June 1983.

39. Ellis, D. A., and Koch, L. C., "Development of Survivable Crash-Resistant Integral Fuel Tank Composite Fuselage Structure, Phase I Results," NADC-81129-60, December 1982.

40. Kuchta, J. M., Clodfelter, R. G., "Aircraft Mishap Fire Pattern Investigations," AFWAL-TR-85-2057, August 1985.

41. Andrenuici, M., "The Use of Rockets Against Crash Fires in Airport Areas," AGARD-CR-166, Aircraft Fire Safety, Rome, Italy, April 1975.

42. Vincent, J., "Fire Protection of Military Aircraft," AGARD-CR-166, Aircraft Fire Safety, Rome, Italy, April 1975.

43. Botteri, B. P., "Aircraft Fire Protection Technology," AGARD-CP-166, Aircraft Fire Safety, Rome, Italy, April 1975.

44. Fiala, R., et al, "On the Applicability of Reticulated Foams for the Suppression of Fuel Tank Explosions," AGARD-CP-166, Aircraft Fire Safety, Rome, Italy, April 1975.

45. MacDonald, J. A., and Wyeth, H. W., "Fire Protection of Fuel Systems in Combat Aircraft," AGARD-CP-166, Aircraft Fire Safety, Rome, Italy, April 1975.

46. MIL-STD-1290, "Light Fixed and Rotary Wing Aircraft Crashworthiness."

47. MIL-T-27422B, "Aircraft Crash-Resistant Fuel Tank."

48. MIL-A-8865A, "Airplane Strength and Rigidity Miscellaneous Loads."

49. AR-56, "Structural Design Requirements."

50. FAR-25, "Airworthiness Standards: Transport Category Airplanes."

51. FAR-121, "Certification and Operations; Domestic Flag and Supplemental Air Carriers and Commercial Operation of Large Aircraft."

52. Air Registration Board - British Civil Airworthiness Requirements; Subsection D3 - Structures; Revised Jan 1951.

53. Advisory Circular, "Auxiliary Fuel System Installations," March 13, 1985.

APPENDIX B

SAFER SUBCOMMITTEE REPORT SUMMARIES

The following information obtained from reference 7 is a summary of two subcommittee reports:

B.1 Explosion Suppression, Fuel Tank Foam/Foil and Fuel Tank Inerting Subcommittee Summary

Fuel tank fires can be prevented if the oxygen concentration in the vapor space above the fuel is maintained below combustion limits. Nitrogen purging of the fuel and vapor space can be an effective means of accomplishing this effect. Such a system is currently installed on all C-5A airplanes. However, the system involves a complex network of valves, pressure regulators and cryogenically stored nitrogen which represents a significant weight and economic penalty to the airplane. The problems of storing sufficient cryogenic nitrogen for a complete flight plan may be alleviated by an on-board nitrogen gas generation system such as is currently under development. However, this system is heavy and must undergo much more development testing before its viability for production installations can be considered.

An alternative to fuel tank inerting is the installation of heat reticulated foam or expanded metal foil in the fuel tanks. These system have the advantage of being passive. They prevent excessive overpressures from developing and eventually completely extinguish any fires that are generated within the tank. Foams are currently being used effectively in many military aircraft used in close support of combat troops where small arms incendiary projectiles are a constant threat. For civilian aircraft it is difficult to justify the severe weight penalties, impaired normal fuel tank maintenance activities, and additional maintenance problems created by foam shredding and enhanced bacterial growth probabilities in water accumulations at the tank bottoms.

Much of the foam discussion also applies to expanded metal foils in fuel tanks. Foils do have the advantage of a significantly higher melting point in a fire environment (1100°F compared to 360°F for foams). However, they are semi-rigid and present complex structural design problems which must be resolved in order to permit access to fuel tank components for service maintenance.

Explosion suppression systems are used in some fuel tank applications where the tank geometry is relatively simple and direct communication to a detector element is available. The basic concept for this system is to sense the flame of an incipient explosion by an infrared or ultraviolet light detector and discharge a fire extinguishing agent to quench the fire before a hazardous overpressure can develop. However, numerous studies of the multi-celled fuel tanks in today's transports have shown that the complexity of the installation overrides its potential value because of the numerous detectors and suppressors required.

The above methods for preventing tank fires will be ineffective in accidents where major fuel tank rupture has occurred. In such cases, the major hazard is the external pool of burning fuel. Some degree of protection would be provided where minor damage occurs. However, the attendant external fire would be far less severe in that situation. In such circumstances, equivalent protection can be provided by a simple flame arrestor installed in the fuel tank vent line to preclude propagation of flame down the vent and by systems which ensure that engine fuel is shut off in fire emergencies. Direct ignition of vapors in the tank by conduction of heat through the tank wall is unlikely for small fires inasmuch as the vapor space oxidation rate is too low to become self-propagating. Tests at FAA Technical Center have shown that this condition can result in the tank self-inerting as the oxygen is consumed by the slow oxidation process.

The above systems were evaluated in terms of weight, cost, maintenance, reliability, retrofit capability, and effectiveness. The results of this evaluation are shown in figure B-1. In every category the incorporation of a flame arrestor and assumed emergency fuel shutoff to the engines is rated as better than, or equivalent to, the more complex systems currently under discussion. Of the more complex systems, only the inerting system appears to offer some improvement in the post-crash fire environment. Figure B-2 shows an assessment of the potential benefits that might have accrued if inerting systems had been incorporated in commercial jet transports since their inception. Of the 13 accidents involving post-crash fires, tank inerting had the potential of reducing fatalities or hull damage in only four cases. In each of these four cases, the relatively simple approach of vent flame arrestor or suppressor and improved methods of fuel cutoff in the engine feed line was determined to be as effective as the inerting system.

These simple and reliable systems are presently installed in most commercial transports. They are typical of the tried and proven fire protection designs which the aircraft industry has pursued throughout its history. Since 1958, this policy in jet transport design has resulted in a reduction in accidents involving fuel vapor explosions from 1.4 to approximately 0.1 per million departures (figure B-3).

From the above survey of existing and proposed ways to eliminate fires inside of jet transport fuel tanks, the group concluded the following:

- When major tank rupture occurs, none of the proposed systems would significantly reduce the fire hazard to passengers and equipment.
- Inerting, quenching, and suppression incur tremondous ecomonic and operational penalties for the small benefits offered.
- Systems currently used in commercial aircraft provide protection equivalent to inerting, quencing, and suppression systems with the tanks remain intact.

CRASH-RESISTANT FUEL TANKS

SUMMARY EVALUATION OF CONCEPTS

CONCEPT	WEIGHT	VOLUME	COST	RELIABILITY	RETROFIT CAPABILITY	EFFECTIVENESS
LN_2	HIGH	HIGH	MODERATE	SATISFACTORY IN MILITARY SERVICE	EXTREMELY DIFFICULT	GOOD IF TANK NOT INITIALLY DAMAGED
GN_2	HIGH	HIGH	MODERATE-HIGH	NOT EVALUATED	EXTREMELY DIFFICULT	NOT EVALUATED
FOAM	HIGH	NOT KNOWN	HIGH	SATISFACTORY IN MILITARY SERVICE W/DEVELOPMENT	EXTREMELY DIFFICULT	NOT EVALUATED
FOIL	HIGH	NOT KNOWN	HIGH	NOT EVALUATED	NOT POSSIBLE	GOOD FOR INTACT TANKS
TANK SUPPRESSION SYSTEM	MODERATE	MODERATE	HIGH	NOT EVALUATED	EXTREMELY DIFFICULT	NOT EVALUATED
VENT FLAME ARRESTOR	LOW	LOW	LOW	GOOD	YES	GOOD
EMERGENCY FUEL SHUTOFF	LOW	LOW	LOW	GOOD	YES	GOOD

Figure B-1. Elimination of Fires Inside Fuel Tanks

	FUEL / HULL LOSS / SURVIVORS / FATALITIES / YEAR / MODEL							POTENTIAL REDUCED FATALITIES OR HULL DAMAGE			LOW PROBABILITY OF ANY SYSTEM
								VENT ARRESTER OR SUPPRESSOR	IMPROVED FUEL CUTOFF	TANK INERTING BENEFIT	
GROUND FIRE-MINOR IMPACT DAMAGE	ROME	707	1964	49	25	Y*	JP-4	X		X	
	LONDON	707	1868	5	121	Y	KERO.		X	X	
	SINGAPORE	CMT	1964	0	68	Y	?	X			
	STOCKTON	DC-8	1969	0	4	Y	?		X	X	
MASSIVE GROUND FIRE -WING TANK BREAKUP -SEVERE BODY DAMAGE	ANCHORAGE	DC-8	1970	47	182	Y	KERO.				X
	MONROVIA	DC-8	1967	51	39	Y	?				X
	CINCINATI	880	1965	70	12	Y	KERO.				X
	CINCINATI	727	1967	58	4	Y	KERO.				X
	ST. THOMAS	727	1970	2	51	Y	KERO.				X
	PAGO PAGO	707	1974	97	4	Y	KERO.				X
	NAIROBI	747	1974	59	97	Y	KERO.				X
	TENERIFE	747	1977	335	61	Y	KERO.				X
	NEW HOPE	DC-9	1977	62	23	Y	KERO.				X

*Y-YES

Figure B-2. Tank Explosion Accident Assessment (Post Crash Fires)

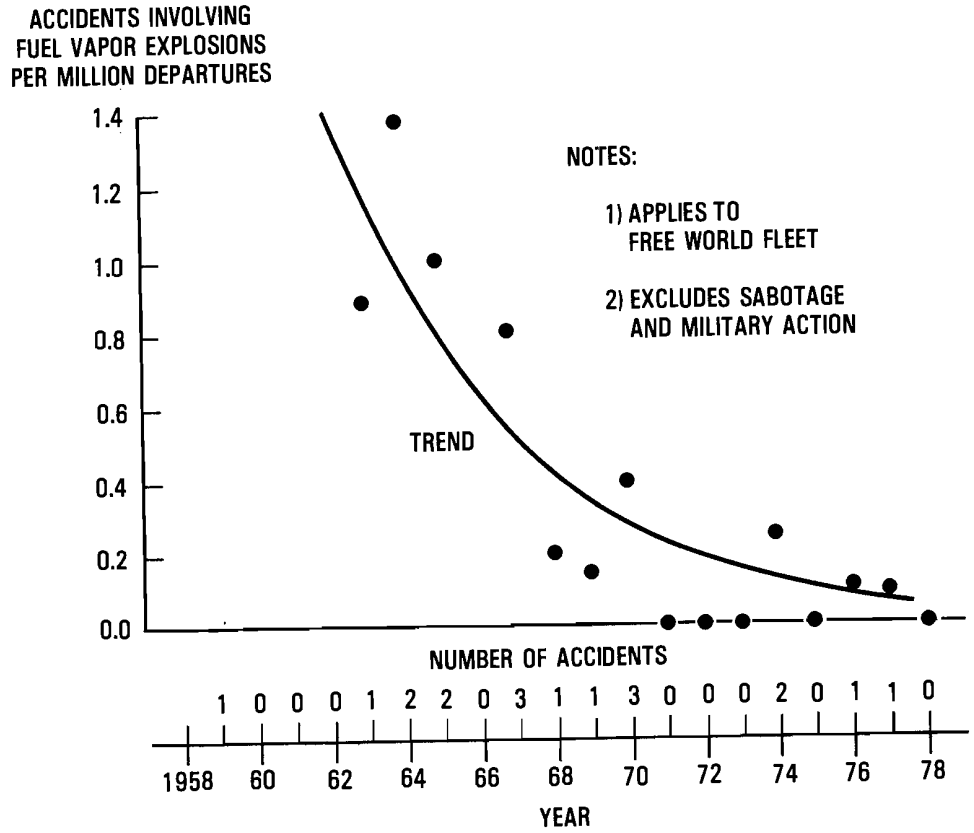

Figure B-3. Tank Explosion Accident Rate World Wide Air Carriers - All Operators

B.2 Crash-Resistant Fuel Tanks Subcommittee Summary

The term crash-resistant fuel tank is generally associated with fuel tanks that are capable of remaining reasonably intact during a crash event, thereby eliminating or minimizing fuel spillage and the corresponding post-crash fire threat to surviving passengers. If achieved, this concept can eliminate most destructive external fires and complement the simple measures discussed in the previous section. The highly visible success of crash-resistant fuel systems installed in Army helicopters makes direct application of this technology to jet transport aircraft tempting. However, the obvious differences in aircraft characteristics, crash scenarios, and accident experience may dictate another course of action.

The obvious difference in fuel system and aircraft design and the crash scenario is further complicated by the definition of impact survivable. The Army bases its determination of whether or not an accident is impact

survivable on an assessment of the inertia forces transmitted to the occupant through his seat and restraint system and on whether or not the cabin structure collapsed within the occupant's envelope. On the other hand, the FAA considers a crash survivable if one occupant survives the impact event. Because of the size of transport aircraft and the correspondingly high energy absorbing potential, it is conceivable that some occupants will survive very high-crash impact velocities. On the other hand, because of the fairly small size of Army helicopters, all occupants and systems are exposed to approximately the same crash environment facilitating a relatively clean definition of an impact survivable crash.

The transport fuel tanks fall broadly into two categories - integral wing tank and fuselage tanks. The application of crashworthy bladder tanks to integral wing tanks cannot be accomplished without a complete redesign of the wing because of its multi-cellular construction. Furthermore, it cannot be said with certainty that crash-resistant fuel tanks would provide fire protection in crash scenarios that include wing separation.

Current commercial aircraft typically carry fuel in the wings and in some cases the fuselage. Fuselage fuel may be carried in the center wing structure or in a pressurized area such as a cargo compartment. Fuel tanks in the center wing structure and fuselage are designed to meet the g loads prescribed for emergency landings (figure B-4).

Federal regulations require that damage to the airplane main landing gear system during takeoff and landing shall not cause spillage of enough fuel to constitute a fire hazard. The fuel tank and landing gear support structure is designed to a higher strength than the gear to prevent fuel tank rupture due to an accidental landing gear overload. This design requirement is further extended to include structural attachments to the wing fuel tank which might be overloaded during a wheels-up or partial wheels-up landing. Flap hinges and engine mounts for example are designed to fail without rupturing the tank.

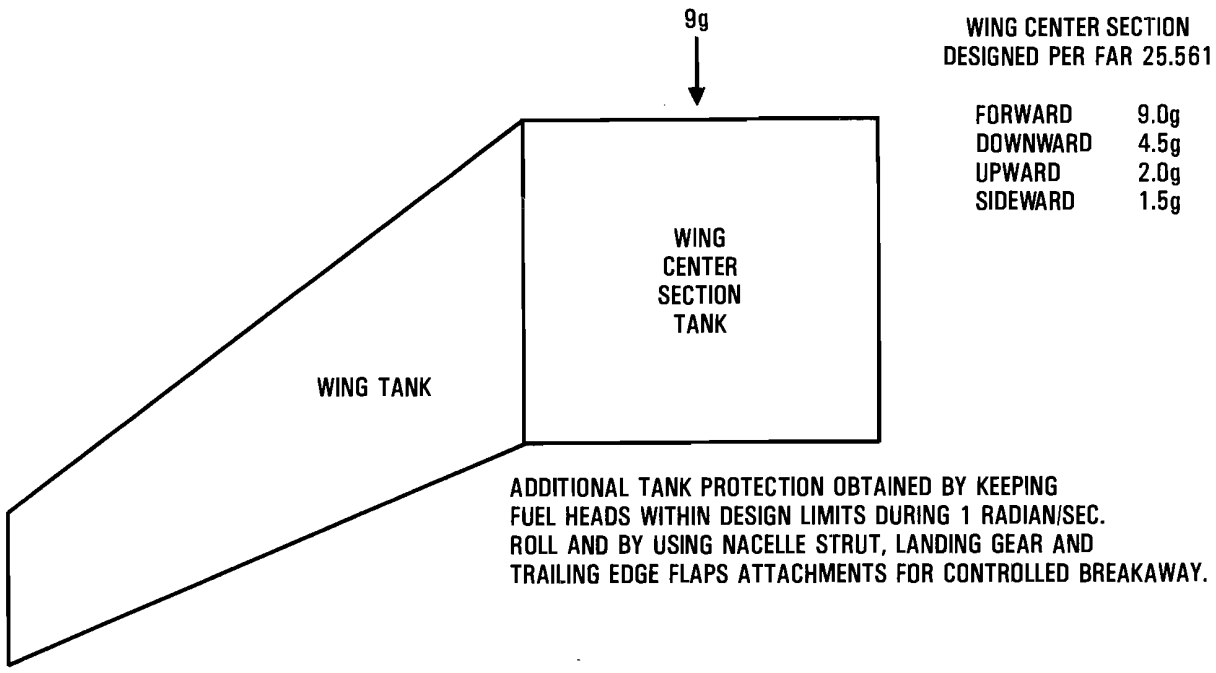

Figure B-4. Fuel Tank Load Factors

In airplanes having fuel tanks located within the pressurized area, typically the cargo compartment, particular attention is paid to minimizing the risk of fuel spillage. An example of one such design is shown on figure B-5. The tank is composed of an aluminum honeycomb outer shell with bladder cells inside. The tank is supported from the passenger floor beams and fuselage frames in such a manner as to preclude body structure deflections from loading the tank. Clearances from adjacent structure are provided around the tank.

The fuel and vent lines that connect the tanks to the main fuel system incorporate drainable and vented shrouds. These lines are either designed to break away from the auxiliary tank or sufficient stretch is provided to accommodate tank movement without causing fuel spillage. Hoses that are required to stretch are subjected to what is normally referred to as the

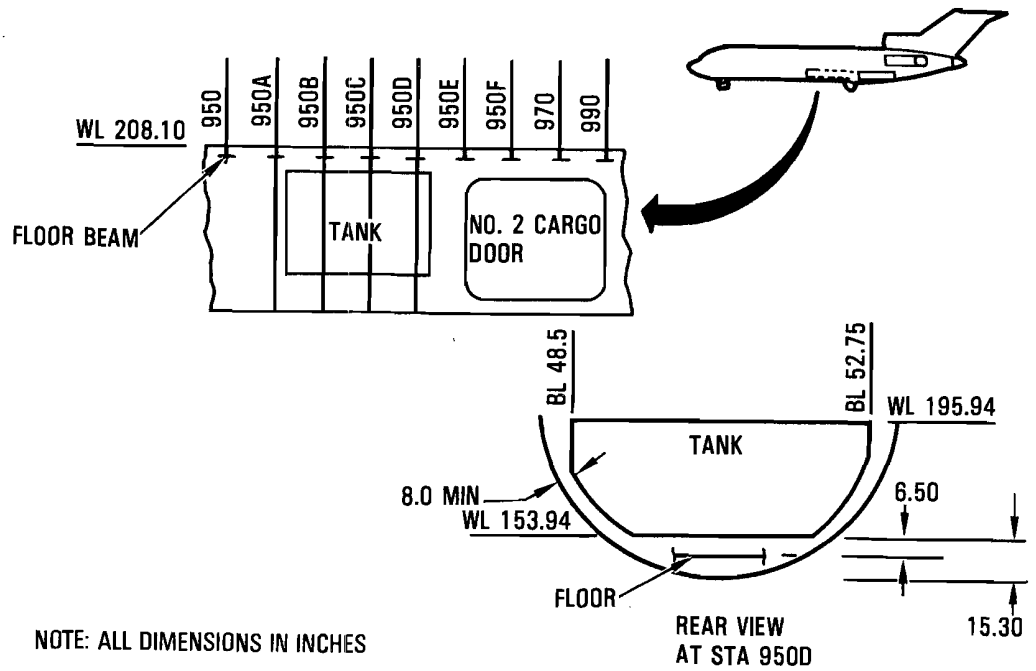

Figure B-5. Cargo Compartment Tank Installation

guillotine test. The hose is pressurized and clamped at both ends to simulate its mounting in the aircraft, then a sharp pointed load is applied in the middle of the hose. The hose must not leak when stretched to its maximum.

In addition, prior accident history is reviewed to ensure that the tank installation will minimize the possible leakage of fuel. For example, accidents or incidents where the gear has separated are reviewed to insure that the tank will not be hit by a displaced gear. Also, incidents or accidents where the body has been crushed are reviewed to insure that there is adequate clearances between the body and the fuel tank. In addition, incidents or accidents where the body has broken are reviewed to ensure that the auxiliary tank is not located across the place where such breaks typically occur.

In summary, the subcommittee states that "the body fuel tank design:

- Exceeds FAR requirements.
- Is more rugged than center section tanks.
- Provides for considerable clearance.
- Includes fuel lines allowance for tank displacement without breakage.
- Accident history indicate minimal spillage exposure.

Without test verification it cannot be said that crash-resistant tanks installed in the transport aircraft fuselage would be completely effective. Although it might not be in the optimum configuration, it would certainly be a significant improvement over the current bladder tanks since this improvement would be realized adjacent to occupants where crash fire protection is urgently needed.

To this end, an evaluation of crash-resistant fuel tank installations in wing/fuselage areas was performed. A summary of the results of this evaluation is shown in figure B-6. As anticipated, the wing installation shows excessively high penalties in almost every category evaluated. On the other hand, the fuselage installation resulted in only low to moderate penalties.

The results of this brief evaluation indicate that a careful analysis of crash data history to explore modes of failure is essential to determine if improvement of fuel retention during transport airport crashes can be achieved. A research program involving the three domestic widebody airframe manufacturers is anticipated to be initiated near the end of 1979* for the purpose of developing crash scenarios and recommending future test and analysis effort for the development of improved crashworthiness."

---

*These studies were completed and reported on in references 1-3.

CONCEPT	WEIGHT	VOLUME	COST	RELIABILITY	RETROFIT CAPABILITY	EFFECTIVENESS
CRT IN FUSELAGE	MODERATE	LOW	LOW	PASSIVE	FEASIBLE	NOT VS. ALL POSSIBILITIES
CRT IN WING	HIGH	HIGH	HIGH	PASSIVE	DIFFICULT	NOT VS. ALL POSSIBILITIES
LEADING EDGE REINFORCEMENT	MODERATE	LOW	LOW	PASSIVE	REDESIGN	UNKNOWN
BREAKAWAY FITTINGS	LOW	NONE	MODERATE	TEST REQUIRED	REDESIGN	NOT PROVEN
DOUBLE WALLS AT SEPARATION POINTS	MODERATE	LOW	MODERATE	TEST REQUIRED	NOT FEASIBLE	FOR WING SEPARATION
35g DESIGN INTEGRAL TANKS	HIGH	MODERATE	HIGH	TEST REQUIRED	DIFFICULT REDESIGN	NOT FOR PENETRATION
INTERNAL LINERS	HIGH	LOW	LOW	MUST ENSURE RETENTION	FUEL COMPATIBILITY REQUIRED	LIMITED

Figure B-6. Crash-Resistant Fuel Tanks Summary, Evaluation of Concepts

APPENDIX C

SUMMARY OF COVERAGE BY EXISTING REGULATIONS AND ADVISORY CIRCULARS

C.1 COVERAGE BY EXISTING FEDERAL AVIATION REGULATIONS

25.561 General

(a) The airplane, although it may be damaged in emergency landing conditions on land or water, must be designed as prescribed in this section to protect each occupant under those conditions.

(b) The structure must be designed to give each occupant every reasonable chance of escaping serious injury in a minor crash landing when -

(1) Proper use is made of seats, belts, and all other safety design provisions;

(2) The wheels are retracted (where applicable); and

(3) The occupant experiences the following ultimate inertia forces acting separately relative to the surrounding structure:

(i) Upward 2.0 g
(ii) Forward 9.0 g
(iii) Sideward 1.5 g
(iv) Downward 4.5 g, or any lesser force that will not be executed when the airplane absorbs the landing loads resulting from impact with an ultimate descent velocity of five ft/sec at design landing weight.

(c) The supporting structure must be designed to restrain, under all loads up to those specified in paragraph (b) (3) of this section,

each item of mass that could injure an occupant if it came loose in a minor crash landing.

25.721 General

(a) The main landing gear system must be designed so that if it fails due to overloads during takeoff and landing (assuming the overload to act in the upward and aft directions), the failure mode is not likely to cause -

(1) For airplanes that have passenger seating configuration, excluding pilots seats, or nine seats or less, the spillage of enough fuel from any fuel system in the fuselage to constitute a fire hazard; and

(2) For airplanes that have a passenger seating configuration, excluding pilots seats, of 10 seats or more, the spillage of enough fuel from any part of the fuel system to constitute a fire hazard.

(b) Each airplane that has a passenger seating configuration excluding pilots seats, of 10 seats or more must be designed so that with the airplane under control it can be landed on a paved runway with any one or more landing gear legs not extended without sustaining a structural component failure that is likely to cause the spillage of enough fuel to constitute a fire hazard.

(c) Compliance with the provisions of this section may be shown by analysis or tests, or both.

25.855 Cargo and Baggage Compartments

(a) No compartment may contain any controls, wiring, lines, equipment, or accessories whose damage or failure would affect safe operation, unless those items are protected so that -

(1) They cannot be damaged by the movement of cargo in the compartment; and

(2) Their breakage of failure will not create a fire hazard.

25.863 Flammable Fluid Fire Protection

(a) In any area where flammable fluids or vapors might be liberated by the leakage of fluid systems, there must be means to prevent the ignition of those fluids or vapors, and means to minimize the hazards in the event ignition does occur.

(b) Compliance with paragraph (a) of this section must be shown by analysis or tests, and the following factors must be considered.

(1) Possible sources and paths of fluid leakage, and means of detecting leakage.

(2) Flammability characteristics of fluids, including effects of any combustible or absorbing materials.

(3) Possible ignition sources, including electrical faults, overheating of equipment, and malfunctioning of protective devices.

(4) Means available for controlling or extinguishing a fire, such as stopping flow of fluids, shutting down equipment, fireproof containment, or use of extinguishing agents.

(5) Ability of airplane components that are critical to safety of flight to withstand fire and heat.

(c) If action by the flight crew is required to prevent or counteract a fluid tire (e.g. equipment shutdown or actuation of a fire extinguisher) quick acting means must be provided to alert the crew.

25.954 Fuel System Lightning Protection

The fuel system must be designed and arranged to prevent the ignition of fuel vapor within the system by -

(a) Direct lightning strikes to areas having a high probability of stroke attachment.

(b) Swept lightning strokes to areas where swept strokes are highly probable; and

(c) Corona and streaming at fuel vent outlets.

25.963 Fuel Tanks: General

(a) Each fuel tank must be able to withstand, without failure, the vibration, inertia, fluid, structural loads that it may be subjected to in operation.

(b) Flexible fuel tank liners must be approved or must be shown to be suitable for the particular application.

(c) Integral fuel tanks must have facilities for interior inspection and repair.

(d) Fuel tanks within the fuselage contour must be able to resist rupture and to retain fuel, under the inertia forces prescribed for the emergency landing conditions in 25.561. In addition, these

tanks must be in a protected position so that exposure of the tanks to scraping action with the ground is unlikely.

(e) [Reserved]

(f) For pressurized fuel tanks, a means with fail-safe features must be provided to prevent the buildup of an excessive pressure difference between the inside and the outside of the tank.

25.967 Fuel Tank Installations

(a) Each fuel tank must be supported so that tank loads (resulting from the weight of the fuel in the tanks) are not concentrated on unsupported tank surfaces. In addition -

(1) There must be pads, if necessary, to prevent chafing between the tank and its supports.

(2) Padding must be nonabsorbent or treated to prevent the absorption of fluids;

(3) If a flexible tank liner is used, it must be supported so that it is not required to withstand fluid loads; and

(4) Each interior surface of the tank compartment must be smooth and free of projections that could cause wear of the liner unless -

(i) Provisions are made for protection of the liner at these points; or

(ii) The construction of the liner itself provides that protection.

(b) Spaces adjacent to tank surfaces must be ventilated to avoid fume accumulation due to minor leakage. If the tank is in a sealed compartment, ventilation may be limited to drain holes large enough to prevent excessive pressure resulting from altitude changes.

(c) The location of each tank must meet the requirements of 25.1185(a).

(d) No engine nacelle skin immediately behind a major air outlet from the engine compartment may act as the wall of an integral tank.

(e) Each fuel tank must be isolated from personnel compartments by a fume-proof and fuelproof enclosure.

25.971 Fuel Tank Sump

(a) Each fuel tank must have a sump with an effective capacity, in the normal ground attitude of not less than the greater of 0.10 percent

of the tank capacity or one-sixteenth of a gallon unless operating limitations are established to ensure that the accumulation of water in service will not exceed the sump capacity.

(b) Each fuel tank must allow drainage of any hazardous quantity of water from any part of the tank to its sump with the airplane in the ground attitude.

(c) Each fuel tank sump must have an accessible drain that -

(1) Allows complete drainage of the sump on the ground;

(2) Discharges clear of each part of the airplane; and

(3) Has manual or automatic means for positive locking in the closed position.

25.973 Fuel Tank Filler Connection

Each fuel tank filler connection must prevent the entrance of fuel into any part of the airplane other than the tank itself. In addition -

(a) Each filler must be marked as prescribed in 25.1557(c);

(b) Each recessed filler connection that can retain any appreciable quantity of fuel must have a drain that discharges clear of each part of the airplane; and

(c) Each filler cap must provide a fuel-tight seal.

25.975 Fuel Tank Vents and Carburetor Vapor Vents

(a) Fuel tank vents. Each fuel tank must be vented from the top part of the expansion space so that venting is effective under any normal flight condition. In addition -

(1) Each vent must be arranged to avoid stoppage by dirt or ice formation:

(2) The arrangement must prevent siphoning of fuel during normal operation:

(3) The venting capacity and vent pressure levels must maintain acceptable differences of pressure between the interior and exterior of the tank, during -

(i) Normal flight operation:
(ii) Maximum rate of ascent and descent; and
(iii) Refueling and defueling (where applicable);

(4) Airspaces of tanks with interconnected outlets must be interconnected;

(5) There may be no point in any vent line where moisture can accumulate with the airplane in the ground attitude or the level flight attitude, unless drainage is provided; and

(6) No vent or drainage provision may end at any point -

(i) Where the discharge of fuel from the vent outlet would constitute a fire hazard; or

(ii) From which fumes could enter personnel compartments.

(b) Carburetor vapor vents. Each carburetor with vapor elimination connections must have a vent line to lead vapors back to one of the fuel tanks. In addition -

(1) Each vent system must have means to avoid stoppage by ice; and

(2) If there is more than one fuel tank, and it is necessary to use the tanks in a definite sequence, each vapor vent return line must lead back to the fuel tank used for takeoff and landing.

25.977 Fuel Tank Outlet

(a) There must be a fuel strainer for the fuel tank outlet or for the booster pump. This strainer must -

(1) For reciprocating engine powered airplanes, have 8 to 16 meshes per inch: and

(2) For turbine engine powered airplanes, prevent the passage of any object that could restrict fuel flow or damage any fuel system components.

(b) For turbine engine powered airplanes, there must be a means to ensure uninterrupted fuel flow to the engine if the strainer prescribed in paragraph (a) of this section is subject to ice accumulation. This means must provide protection to the fuel system components equal to that provided by the strainer prescribed in paragraph (a) of this section.

(c) The clear area of each fuel tank outlet strainer must be at least five times the area of the outlet line.

(d) The diameter of each strainer must be at least that of the fuel tank outlet.

(e) Each finger strainer must be accessible for inspection and cleaning.

25.981 Fuel Tank Temperature

(a) The highest temperature allowing a safe margin below the lowest expected autoignition temperature of the fuel in the fuel tanks must be determined.

(b) No temperature at any place inside any fuel tank where fuel ignition is possible may exceed the temperature determined under paragraph (a) of this section. This must be shown under all probable operating, failure, and malfunction conditions of any component whose operation, failure, or malfunction could increase the temperature inside the tank.

25.991 Fuel Pumps

(a) Main pumps. Each fuel pump required to meet the fuel system requirements of this subpart (other than those in paragraph (b) of this section), is a main pump. For each main pump, provision must be made to allow the bypass of each positive displacement fuel pump other than a fuel injection pump (a pump that supplies the proper flow and pressure for fuel injection when the injection is not accomplished in a carburetor) approved as part of the engine.

(b) Emergency pumps. There must be emergency pumps or another main pump to feed each engine immediately after failure of any main pump (other than a fuel injection pump approved as part of the engine).

25.993 Fuel System Lines and Fittings

(a) Each fuel line must be installed and supported to prevent excessive vibration and to withstand loads due to fuel pressure and accelerated flight conditions.

(b) Each fuel line connected to components of the airplane between which relative motion could exist must have provisions for flexibility.

(c) Each flexible connection in fuel lines that may be under pressure and subjected to axial loading must use flexible hose assemblies.

(d) Flexible hose must be approved or must be shown to be suitable for the particular application.

(e) No flexible hose that might be adversely affected by exposure to high temperatures may be used where excessive temperatures will exist during operation or after engine shut-down.

(f) Each fuel line within the fuselage must be designed and installed to allow a reasonable degree of deformation and stretching without leakage.

25.1359 Electrical System Fire and Smoke Protection

(a) Components of the electrical system must meet the applicable fire and smoke protection requirements of 25.831(c), 25.863, and 25.1205.

(b) Electrical cables, terminals, and equipment in designated fire zones, that are used during emergency procedures, must be at least fire-resistant.

(c) Main power cables (including generator cables) in the fuselage must be designed to allow a reasonable degree of deformation and stretching without failure and must -

(1) Be isolated from flammable fluid lines; or

(2) Be shrouded by means of electrically insulated flexible conduit, or equivalent, which is in addition to the normal cable insulation.

(d) Insulation on electrical wire and electrical cable installed in any area of the fuselage must be self-extinguishing when tested at an angle of 60° in accordance with the applicable portions of Appendix F of this part, or other approved equivalent methods. The average burn length may not exceed 3 inches and the average flame time after removal of the flame source may not exceed 30 seconds. Drippings from the test specimen may not continue to flame for more than average of 3 seconds after falling.

121.227 Pressure Cross-feed Arrangements

(a) Pressure cross-feed lines may not pass through parts of the airplane used for carrying persons or cargo unless -

(1) There is a means to allow crew-members to shut off the supply of fuel to these lines; or

(2) The lines are enclosed in a fuel and fume-proof enclosure that is ventilated and drained to the exterior of the airplane. However, such an enclosure need not be used if those lines incorporate no fittings on or within the personnel or cargo areas and are suitably routed or protected to prevent accidental damage.

(b) Lines that can be isolated from the rest of the fuel system by valves at each end must incorporate provisions for relieving excessive pressures that may result from exposure of the isolated line to high temperature.

121.229 Location of Fuel tanks

(a) Fuel tanks must be located in accordance with 121.255.

(b) No part of the engine nacelle skin that lies immediately behind a major air outlet from the engine compartment may be used as the wall of an integral tank.

(c) Fuel tanks must be isolated from personnel compartments by means of fume- and fuel-proof enclosures.

C.2 British Civil Airworthiness Requirements (BCAR)

Sub-section D3-Structures, Chapter D3-9 Emergency Alighting Conditions, revised, 1st January, 1951.

A.C.D

1. GENERAL - The requirements of this chapter are intended to ensure that in the event of an aeroplane making an emergency landing involving accelerations up to prescribed maxima, the safety of the occupants has been fully considered. Such consideration extends to the avoidance of injury to the occupants due to the damage which the aeroplane is likely to suffer under the prescribed conditions.

   Note: Hazards to occupants in crash conditions can be reduced by designing the aeroplane so that the following occurrences are unlikely to cause either direct physical injury to the occupants or injury as a result of rupture of the tanks--

   4g downwards to 4.5g upwards

   9 forwards to 1.5g rearwards

   Zero to 2.25g sideways

3. EQUIPMENT - Items of equipment shall, so far as is practicable, be positioned so that if they break loose they are unlikely to cause injury to the occupants or to nullify any of the escape facilities provided for use after an emergency alighting. When such positioning is not practicable the attachment and surrounding structure shall be designed to withstand inertia forces at least equal to those prescribed in 2.

4. CONDITIONS

   a. Crash Landing. The design of the aeroplane shall be such that there will be every reasonable probability of the occupants

escaping serious injury in the event of a crash landing, including the case of wheels retracted when such contingency is possible.

b. Turnover. The structure of the aeroplane shall be designed to protect the occupants in the event of a complete turnover, unless the configuration of the aeroplane renders such a contingency extremely improbable.

C.3 AC-25-8 - Advisory Circular Auxiliary Fuel System Installation

The advisory circular on "auxiliary fuel system installations" (reference 55) addresses several areas pertinent to crashworthiness. The intent of the circular is to be directed to modifications to existing fuel systems and particularly those associated with smaller FAR 25 aircraft. However, much of the contents are appropriate for all FAR 25 aircraft. The advisory circular contains material arranged in six chapters as follows:

1. Fuel System Installation Integrity and Crashworthiness
2. Auxiliary Fuel System Arrangement
3. Component Materials
4. Auxiliary Fuel System Performance
5. Impact of System on Airplane Operation and Performance
6. User Installation Requirements

The material contained in Chapters 1 and 2 is most relevant to this current study. Some of the more pertinent passages contained in these two chapters are included in the following excerpts:

CHAPTER 1 - FUEL SYSTEM INSTALLATION INTEGRITY AND CRASHWORTHINESS

1. STRUCTURAL INSPECTION

b. Design Criteria and Structural Loads

(1) The extent of structural substantiation required depends on the magnitude and location of the added fuel and the modifications required to

accommodate the fuel tank installation. Generally, evaluation of the tank attachment hardware and local structure will be sufficient; however, as noted earlier, installations that involve changes to primary structure, aerodynamics or mass distribution may require additional extensive substantiation that is beyond the scope of this AC. Any increase in maximum weight or changes in c.g. limits to increase the utility of the airplane with the auxiliary fuel system installed is also beyond the scope of this AC.

(2) The tank design should isolate the tank from airframe induced structural loads and from deformations induced by the wing and fuselage.

(3) The fuel tank and its attachment and support structures must be designed to withstand all design loads, including the emergency landing load specified in paragraph 25.561(b).

(4) Fuel loads included in the structural substantiation should be based on the most critical density of the fuels approved for use in the airplane.

(6) In addition to the requirements of paragraph 25.963(d) regarding retention of the auxiliary fuel tank itself, it should be shown by a crashworthiness analysis or the equivalent that the airplane lower fuselage and auxiliary fuel tank supporting structure are capable of absorbing the kinetic energy with landing gear up associated with the five f.p.s. ultimate descent velocity found in paragraph 25.561. Dynamic loads defined by the crashworthiness analysis should be accounted for in the stress analysis.

(7) Sufficient vehicle structural crush distance should be available to avoid auxiliary fuel tank ground contact under the loading conditions of paragraph 25.561(b). Compliance may be shown by analysis and where necessary by test. The analysis should identify the failure mode and define the interaction between the tank and adjacent structure and between adjacent tanks.

(8) Structural deformation must be shown to be controllable and predictable, as required by paragraph 25.965.

(11) Keel structure that is adequate for tank load distribution and protection against rupture in crash landing should be provided for all tanks. Consideration should be given to eccentricities introduced into the basic airframe from fuel tank attachments.

(12) The following must be considered in the evaluation of the tank and tank support structure in accordance with the applicable certification basis:

(vi) To preclude rupture and provide durability, the face sheet thickness should be sufficient for the applicable load requirements. To prevent accidental damage, these thicknesses are typically not less than .040 inch equivalent aluminum for the outer face sheets or .020 inch for the inner face sheets.

d. Crash Overload. Hard attachment points between the fuel tank and airframe structure restrict relative motion and, in turn, impose high concentrated loads on both the tank and the airframe. In order to limit the magnitude of these concentrated loads, crash load failure points are typically located between the tank and airframe. In addition:

(1) Attachment point loads should be evenly distributed to minimize the possibility of fuel tank rupture.

(2) In the event of an overload conditioin, the failure should occur at some point between the tank attach fitting and the basic airframe and floor structure to minimize potential body tank rupture. Where possible, failure of the tank support should not induce failure of the fuel lines for the maximum tank displacement that could occur. It may be necessary to incorporate redundant supports or secondary constraint bulkheads in this regard.

2. TANK LOCATION CRITERIA

c. Proximity to Fuselage Break Separation Points. Fuselage break points are typically found at areas of structural discontinuity in the fuselage shell. Where possible, avoid locating the tank and its support structure at these discontinuities. Examples are:

(1) The fore and aft ends of the wing box structure;

(2) The fore and aft ends of the landing gear compartments;

(3) Fuselage shell cutouts such as boarding/emergency exit/cabin servicing doors and baggage compartment doors; and

(4) Manufacturing splice and field breaks.

d. Installations in Cargo and Baggage Compartments (Paragraphs 25.855(b), 25.855(a-1), (a-2) and 26.857).

(1) The various components of an auxiliary fuel system installed in cargo and baggage compartments should be protected from damage caused by shifting cargo. A cargo barrier should be used to separate the auxiliary fuel system from the cargo. The barrier should be designed to contain the maximum cargo loading for which the compartment is approved under all load conditions including the emergency landing conditions. This barrier may be either a rigid or a flexible type. Solid barriers are sometimes installed to toally separate and isolate the auxiliary fuel system from the compartment, resulting in a reduced compartment size. If the barrier is flexible, consideration should be given to deformation or displacement of the barrier when under load. If minimum tension requirements are necessary to maintain the structural integrity of a flexible barrier, the requirements should be specified and conspicuously displayed in the compartment. Finally, the barrier should prevent any type of bulk cargo, particularly slender or sharp objects, from penetrating components of the auxiliary fuel system, and be structurally

capable of preventing cargo from contacting the fuel system installation under all load conditions including emergency landing inertia loads. Alternatively, a barrier would not be needed if it can be shown that the fuel tank system shroud or outer wall can offer equivalent protection to the remaining components of the system. In addition, the auxiliary fuel system installation should not adversely affect intercompartmental venting incorporated in the basic airplane.

4. GENERAL ARRANGEMENT EVALUATION

a. System Layout

1. Line Routing, Flexibility and Support

(ii) Consider the crashworthiness characteristics of the line routing. Where possible, interconnect tanks, rigid metal lines and other major fuel system components with flexible lines. Allow sufficient flexible line length to permit some shifting of the components without breaking the lines or connections. The flexibility of the entire fuselage auxiliary fuel line routing should be sufficient to account for fuselage break points. If lines are routed near structural members, the effect of "guillotine" or slashing action due to a crash landing should be addressed. When routing fuel lines through cabin floor structural lightening holes is necessary, provide sufficient clearance to prevent line severing due to floor deformations on a crash landing. A crashworthiness evaluation report of the auxiliary fuel system installation should be submitted during certification which shows, by analysis or test, that precautions have been taken to minimize the hazards due a survivable crash environment.

2. Fuel Tank and Component Location, Access, Mounting and Protection

(i) Each auxiliary fuel tank or tank module design should be evaluated for the basic requirements of paragraphs 25.963 and 25.965. These requirements address, for example, the basic integrity of the tank, bladder cell requirements, pressurized tank requirements and the tank tests, such as, slosh and vibration, that may be required.

(ii) As a general rule, all components, such as valves, pressure transmitters or switches, filters, etc., should be directly mounted to the airplane structure or to supports which are directly attached to the structure. If fuel or other system lines or fittings are used to support auxiliary fuel system "in-line" small/lightweight components, it should be shown that this practice does not result in excessive structural stresses when subjected to the vibration and other loads expected in service.

(iv) Locating components in areas where there is a high probability that they can be stepped on or tripped over by personnel during the routine servicing or maintenance of the airplane should be avoided. The crashworthiness of the location should also be considered. Components should

not be installed below the fuselage cargo floor if they may be crushed, scraped off, or cause penetration into the auxiliary fuel tank which can result in leakage during a wheels-up landing. protection from damage due to shifting baggage and other objects which may not be tied down in the cargo area should be provided. See Chapter 1, paragraph 2a for cargo barrier criteria.

(v) For components which must be located inside the fuel tanks, the crashworthiness aspects of the installation should be considered. Means to prevent component sharp edges from penetrating the tank surface due to deflection of the surface under crash load conditions should be provided, especially where flexible tank bladder cells are used.

3. Tank Penetration Points

(iii) All tank fuel line to airplane structure attachments should be evaluated for the flight, flight vibration and crash loads which may be transmitted to the tank walls. From the crashworthiness standpoint, to prevent fuel tank fittings from being torn out of the tank wall, it may be advisable to consider the need for frangible disconnect valves or fittings, mounted on the external surface of the tank, which separate and shut off any hazardous fuel flow from the tank in event of a crash. However, a failure analysis must show that inadvertent closure of these frangible fittings will not interfere with continued safe flight.

b. Fuel Containment Secondary Barriers (Paragraphs 25.967, 25.863). For auxiliary fuel systems which are located in the passenger or cargo and baggage compartments (Appendix 1), isolation of the fuel and fuel vapors from other areas of the compartment is of critical importance. Tanks, line fittings, connections and other components, such as valves, pressure transmitters, regulators, etc., must be shrouded or provided with redundant barriers such that leaks from any of these sources will not present a fire hazard. Some of the important characteristics of the secondary barrier system are:

c. Tank, Fuel and Vent Line and Component Shrouds (Paragraph 25.967).

(1) Auxiliary fuel tanks installed in a passenger or cargo and baggage compartment should be completely shrouded. This means that all fittings connected to and through the tank walls should also be provided with secondary barriers. Figures 2 and 3 show some acceptable designs for shrouding equipment items and fittings installed on or through the tank walls. Each tank penetration design should be reviewed to ensure a single failure (such as a seal failure) does not result in fuel or fuel vapors entering the compartment. A primary seal with a secondary shroud/seal provides the required protection if indication of a primary seal failure is also provided and the secondary seal is pressure tested periodically.

(2) All vent and fuel fittings and connections in a passenger or cargo compartment should also be shrouded. An example of this is shown in figure 4 (reference 55).

5. FUEL SYSTEM CONTAMINATION PREVENTION ASSESSMENT (Paragraphs 25.971, 25.977 and 25.997)

a. Fuel Tank Sumps and Fuel Strainers

(2) Sump Drain Provisions. All sumps should have provisions which allow complete drainage of the sump. These drainage provisions should be carefully designed to provide high reliability in service and a high degree of crashworthiness. Drain valves should be positive locking and reliable. Drain valve installations should provide double seals to prevent overboard leakage from a single seal failure. Lightning aspects of the overboard access should be addressed as discussed in the next section. Locate the drain valve at or near the sump. Do not locate drain valves on the bottom surface of the fuselage or other areas where they may be inadvertently damaged or opened. In passenger/cargo compartments, sump drains should be shrouded in accordance with the provisions described in the previous section and the shrouds provided with vents per normal shroud procedures. The shrouded fitting between the sump drain and the overboard penetration should provide a "fuse" point or other means to ensure that upward penetration of the tank does not occur during a crash landing.

☆U.S. GOVERNMENT PRINTING OFFICE: 1988—505-068/60265

RECEIVED
FEB 9 1988