CT
87/
05

DOT/FAA/CT-87/05

FAA TECHNICAL CENTER
Atlantic City International Airport
N.J. 08405

Autogas in General Aviation Aircraft

FEDERAL AVIATION ADMINISTRATION
JUL 6 1987
TECHNICAL CENTER LIBRARY
ATLANTIC CITY, N.J. 08405

H. Stewart Byrnes
William C. Cavage
Augusto M. Ferrara

March 1987

Final Report

This document is available to the U.S. public through the National Technical Information Service, Springfield, Virginia 22161.

US Department of Transportation
Federal Aviation Administration

FAA TECHNICAL CENTER LIBRARY
00013488

NOTICE

This document is disseminated under the sponsorship of the Department of Transportation in the interest of information exchange. The United States Government assumes no liability for the contents or use thereof.

The United States Government does not endorse products or manufacturers. Trade or manufacturer's names appear herein solely because they are considered essential to the object of this report.

1. Report No.	2. Government Accession No.	3. Recipient's Catalog No.
DOT/FAA/CT-87/05		

4. Title and Subtitle	5. Report Date
AUTOGAS IN GENERAL AVIATION AIRCRAFT	April 1987
	6. Performing Organization Code
7. Author(s) H. Stewart Byrnes William C. Cavage and Augusto M. Ferrara	8. Performing Organization Report No. DOT/FAA/CT-87/05
9. Performing Organization Name and Address Federal Aviation Administration Technical Center Atlantic City Airport, New Jersey 08405	10. Work Unit No. (TRAIS)
	11. Contract or Grant No.
12. Sponsoring Agency Name and Address U.S. Department of Transportation Federal Aviation Administration Technical Center Atlantic City Airport, New Jersey 08405	13. Type of Report and Period Covered Final
	14. Sponsoring Agency Code

15. Supplementary Notes

16. Abstract

A series of aircraft engine tests were conducted on a dynamometer which compared the vapor lock tendency of selected automobile gasolines against aviation gasoline. The effects of fuel temperature, the technique for heating the fuel used in vapor lock studies, the engine cooling air temperature, the fill level in the tanks, and fuel system configuration were investigated. The tendency for automobile gasoline to detonate in an aircraft engine was investigated, and the results show a strong correlation with the Motor Octane Number. Flight data is presented which shows the effect of the mode of operation on fuel system temperatures in two typical general aviation aircraft. Select results from a fuel aging study demonstrate the effects of long-term storage of automobile gasoline in typical general aviation aircraft wing tanks.

Based on these results, a number of considerations pertaining to certification of general aviation aircraft fuel systems with automobile gasoline are identified.

17. Key Words	18. Distribution Statement
Aviation Gasoline (Avgas) Vapor Lock Automobile Gasoline (Autogas) Dynamometer Tests Detonation Reid Vapor Pressure Octane Number Aircraft Certification Test	Document is available to the U.S. public through the National Technical Information Service, Springfield, Virginia 22161

19. Security Classif. (of this report)	20. Security Classif. (of this page)	21. No. of Pages	22. Price
Unclassified	Unclassified		

Form DOT F 1700.7 (8-72) Reproduction of completed page authorized

TABLE OF CONTENTS

	Page
EXECUTIVE SUMMARY	viii
INTRODUCTION	1
Background	2
TEST APPARATUS	6
Dynamometer	6
Fuel Aging Studies	11
Flight Tests	11
TEST PROCEDURES	13
Baseline	13
Detonation Surveys	16
Vapor Lock	16
Horsepower Computation	17
Fuel Aging Studies	18
Flight Tests	18
SUMMARY OF RESULTS	19
Baseline: Avgas	19
Detonation: Autogas	20
Vapor Lock Tests: Autogas	22
Flight Tests	44
CONCLUSIONS	47
REFERENCES	48
APPENDIX	
A - Distribution List	

LIST OF ILLUSTRATIONS

Figure		Page
1	Schematic of the ASTM Distillation Apparatus	3
2	Typical Distillation Curves for Avgas and Autogas	4
3	General Location of the Principle Dynamometer Components	7
4	Schematic of the Fuel System Configurations	8
5	Layout of Wing Sections Used in Fuel Aging Study	12
6	Location of the Test Apparatus for the Flight Tests (2 Sheets)	14
7	Selected Results from the Detonation Surveys	23
8	Heating Experiment Using a C-172 Fuel System	30
9	Average Vapor Lock Temperature Versus Initial Tank Temperature	32
10	Cross Section Views of Marvel-Schebler Carburetor Used in the Dynamometer Installation	36
11	Average Vapor Lock Temperature by RVP	39
12	Average Vapor Lock Temperature by RVP Without Sample SRU in Database	40
13	Sediment Bowl Temperature Versus RVP	42
14	A Vapor Lock Sequence Showing the Effect of the IBP on Fuel Flow Rate and Fuel Pressure	43
15	Fuel System Temperatures During a Phase 1 Flight with a C-172 (Verticle Lines Indicate the Beginning of that Phase of Flight; e.g., TO is the Start of the Takeoff)	45

LIST OF TABLES

Table		Page
1	Some Differences Between the Various ASTM Octane Rating Standards	5
2	Data Recorded on the Automatic Data Acquisition System	10
3	The Effects of Aging on the Octane Ratings	21
4	Properties of Several Mixtures of Avgas in Regular Unleaded Autogas	22
5	Properties of the Gasolines Tested for Vapor Lock	24
6	Effect of Initial Tank Temperature on the Drop in RVP	25
7	Effects of Fuel Aging on Vapor Lock in Suction Feed System	26
8	Effect of Overnight Aging on Vapor Lock Behavior	27
9	Effects of Cooling Air Temperature and Tank Fill Level on Vapor Lock Temperature	28
10	Comparison of Two Heating Techniques on Vapor Lock Temperature	29
11	Vapor Lock Temperature as a Function of Initial Tank Temperature	31
12	Vapor Lock Temperature as a Function of Fuel Flow	33
13	Fuel System Configuration Effects; Gravity Feed System	34
14	Fuel System Configuration Effects; Suction Feed System	35
15	Average Vapor Lock Temperature by ASTM Volatility Class	38

LIST OF ABBREVIATIONS AND SYMBOLS

ADR	Air Density Ratio
ASTM	American Society for Testing and Materials
Avgas	Aviation Gasoline
Autogas	Automobile Gasoline
BMEP	Brake Mean Effective Pressure - psi
BSFC	Brake Specific Fuel Consumption - lbm/hp-hr
BTDC	Before Top Dead Center
CHT	Cylinder Head Temperature - degC or degF
DC	Direct Current
DCM	Dynamometer Control Module
DDM	Data Display Module
deg	Degrees of Rotation
degC	Degrees Celsius
degF	Degrees Fahrenheit
EAA	Experimental Aircraft Association
ECM	Electronic Control Module
EGT	Exhaust Gas Temperature - degC or degF
FAA	Federal Aviation Administration
FT	Full Throttle
ft-lbs	Foot Pounds (typically torque)
gph	Gallons Per Hour
hp	Horsepower
hr	Hour
IBP	Initial Boiling Point - degC
inHg	Inches of Mercury (Typically Manifold Pressure)
inH_2O	Inches of Water (Typically Fuel or Cowling Pressure)
lbm	Pound Mass
MAP	Manifold Pressure - inHg Absolute
MON	Motor Octane Number
MSL	Mean Sea Level
NIPER	National Institute of Petroleum and Energy Resources
P_{amb}	Ambient Pressure - inHg Absolute
psi	Pound Per Square Inch
psig	Gauge Pressure in Pounds Per Square Inch
RON	Research Octane Number
RPM	Revolutions Per Minute
RVP	Reid Vapor Pressure - psig
sl	Sea Level (Used as a Subscript)
STC	Supplemental Type Certificate
T_{amb}	Ambient Temperature - degC or degF

T_{dew}	Dew Point - degC or degF
VAC	Volts Alternating Current
VDC	Volts Direct Current
V_x	Aircraft Speed for Best Angle of Climb
V_y	Aircraft Speed for Best Rate of Climb
W_f	Fuel Flow - gph
100LL	100 Octane Avgas with a Low Lead Content
Δ	Delta (Mathematical Difference)

EXECUTIVE SUMMARY

A series of aircraft piston engine tests were conducted on a dynamometer located at the Federal Aviation Administration (FAA) Technical Center. These tests examined the effect of the various control variables on the occurrence of vapor lock. Specific items investigated were initial tank temperature, fuel flow rate, fuel system configuration (gravity feed versus suction feed), fuel heating technique, fuel aging, ambient air temperature, and the differences between carbureted and injected versions of the same engine. The results from these tests are combined with an analysis of data from flight tests conducted at Woodbine, New Jersey, to establish the following conditions as the worst case for vapor lock testing with automobile gasoline (i.e., most likely to result in vapor lock):

1. Takeoff fuel flow.

2. Initial fuel temperature between 38 and 43 degrees Celsius (100 to 110 degrees Fahrenheit).

3. An ambient air temperature of 29 degrees Celsius or higher (85 degrees Fahrenheit).

4. Engine operating temperature typically found after a period of prolonged idling or a hot soak.

5. ASTM Class E (winter grade) fuel if the testing is to be conducted with autogas, minimum Reid Vapor Pressure of 13.5 psi.

Other observations based on these tests include:

1. The technique used to heat the test fuel has no effect on the vapor lock behavior provided fresh fuel is used and the fuel is heated within three hours. Agitation of the fuel should be kept to a minimum, especially after heating.

2. In general, the higher the Reid Vapor Pressure, the greater the tendency to vapor lock. This effect can be masked by the blending or refining technique used by the supplier, such as, by the addition of additives or other components.

3. A system which will not vapor lock on avgas can be made to vapor lock on autogas. Consequently, the hot fuels test need only be run using autogas if the aircraft is to be certified for both avgas and autogas.

4. Evaporation and fuel venting can result in the loss of 33 percent of the fuel in a tank when using autogas, which will significantly affect aircraft range.

5. Fuel system incompatibility with autogas may result in minor problems, e.g., the o-rings in the fuel selector swelled, making the selector more difficult to operate.

The Motor Octane Number (MON) of an autogas is directly related to the onset of detonation in the test engine. The relationship between the Research Octane Number and detonation is not as well defined as it is for the MON. Detonation was observed in the test engine (designed for 91/96 avgas) at what would be a normal cruise power setting when using regular unleaded autogas.

INTRODUCTION

The Experimental Aircraft Association (EAA) and other organizations have actively pursued obtaining Supplemental Type Certificates (STCs) which allow the use of automobile gasoline (autogas) in low compression aircraft engines. Typically, the aircraft which qualify for these STCs are older aircraft whose engines were originally certified for 80 octane aviation gasoline. The driving force behind these STCs is the reduced availability of 80 octane aviation gasoline and the large price difference between aviation gasoline (avgas) and autogas.

As the price differential between avgas and autogas grows, there is increasing pressure to substitute autogas for other grades of avgas. This raises a number of questions which need to be answered. The broader distribution of constituents in autogas, when compared with avgas, tends to increase the Reid Vapor Pressure (RVP) of the fuel, which in turn adversely affects the amount of vapor formed in the aircraft fuel system. The lower initial boiling point associated with autogas means that vapor will be formed at lower temperatures than with avgas and the use of 110 degree (^{o}) Fahrenheit (F) fuel during the certification of aircraft (Federal Aviation Regulation 23.961) may not apply when certifying an aircraft with autogas. The octane rating techniques differ between avgas and autogas, and the ratings typically associated with autogas may not apply to aircraft engines. As the fuel ages, autogas will lose a greater percentage of its constituents than avgas, and there is the possibility that this loss will adversely affect the octane rating.

The Central and New England Regions of the Federal Aviation Administration (FAA), who are responsible for the certification of general aviation aircraft and their engines, requested through the Office of Aviation Standards that a program be initiated at the FAA Technical Center which would address these concerns. In response, the Technical Center conducted a number of tests utilizing a dynamometer, a Lycoming 0-320, and a Cessna 172 fuel system to investigate the effects fuel temperature, engine cooling air temperature, tank fill level, and fuel system configuration on the tendency to vapor lock.

The technique for heating the fuel in the aircraft tanks was investigated as were the effects of long- and short-term storage on the characteristics of autogas. In conjunction with these studies, the tendency to detonate on autogas was investigated, and the results were correlated with the octane number of the fuel.

Select data from a series of flight tests conducted prior to the inception of this program were analyzed with the intent of identifying the effects of the operational mode on the fuel temperature in two representative general aviation aircraft.

This report summarizes the results from these tests and presents a number of considerations for future certification tests based on the analysis of these results.

BACKGROUND.

Gasolines are intended to be volatile, and the RVP is a general measure of the volatility of a fuel. Essentially, the RVP is the vapor pressure of the fuel at 100° F, and it can be interpreted as an indicator of the amount of vapor a fuel will generate when it is heated in the fuel system. An aircraft has higher operating temperatures, and it operates at reduced atmospheric pressures when at altitude. Both of these factors aggravate the formation of vapor. This explains why the maximum RVP allowed for aviation fuels is lower than for autogas. The maximum RVP for avgas is 7.0 psi. The maximum RVP for autogas varies with the season [per American Society for Testing and Materials (ASTM) specification D-439]. Class E fuels (winter grades) are allowed to reach 15 psi, whereas Class A fuels, which are sold in the Southwest during the summer, may have a maximum RVP of 9.0 psi. Summer fuels in New Jersey are Class C fuels (11.5 psi maximum).

The longer the fuel remains in vented tanks, the more likely the fuel will lose the more volatile components, and the loss of the more volatile components may alter the octane rating of the fuel. In addition, the more heavy ends (higher molecular weight and, conversely, higher boiling point), the greater the tendency to form gum deposits as the fuel sits in the tank. A typical general aviation aircraft will be operated about once a week, whereas a typical car is operated at least once a day. As a consequence, fuel tends to remain in general aviation aircraft tanks for longer periods of time than in an automobile tank. The distillation procedure described in ASTM D-86 is a rough measure of the distribution of components found in the fuel. During a distillation, the operator measures the temperature of the gas entering the condenser as a given percentage of the fuel is collected from the condenser. (See figure 1 for a schematic of the distillation apparatus.) For the above reasons, avgas has a narrower distribution of constituents than autogas, and this is reflected in the distillation curve. Typical distillation curves for avgas and autogas are found in figure 2.

The initial boiling point (IBP) of a fuel is determined during a distillation by recording the temperature of the gas entering the condenser as the first drop falls from the outlet of the condenser. This leads to an important distinction--the IBP is not the temperature of the liquid at the bottom of the distillation flask, it is the temperature of the gases above the liquid. In general, the temperature of the liquid is slightly higher than the temperature of the gas at the top of the flask. The Technical Center's experience is that the liquid in the flask is at least 15° Celsius (C) hotter than the gas entering the condenser at the time the first drop falls.

The typical performance profile for an aircraft engine is substantially different than the typical performance profile for an automobile engine. At cruise speeds, an automobile engine will operate between 10 and 30 percent of its rated horsepower. An aircraft engine will operate between 50 and 75 percent of its rated power during normal cruise conditions. During takeoff and climb an aircraft engine will be operating at its maximum rated power (less the performance loss due to the prevailing pressure altitude) for extended periods of time. Even during acceleration, it is unusual for an automobile engine to operate at its rated horsepower. The operating temperatures of an aircraft engine are higher than those of an automobile engine, and the higher the operating temperature, the greater the tendency for detonation to occur. This

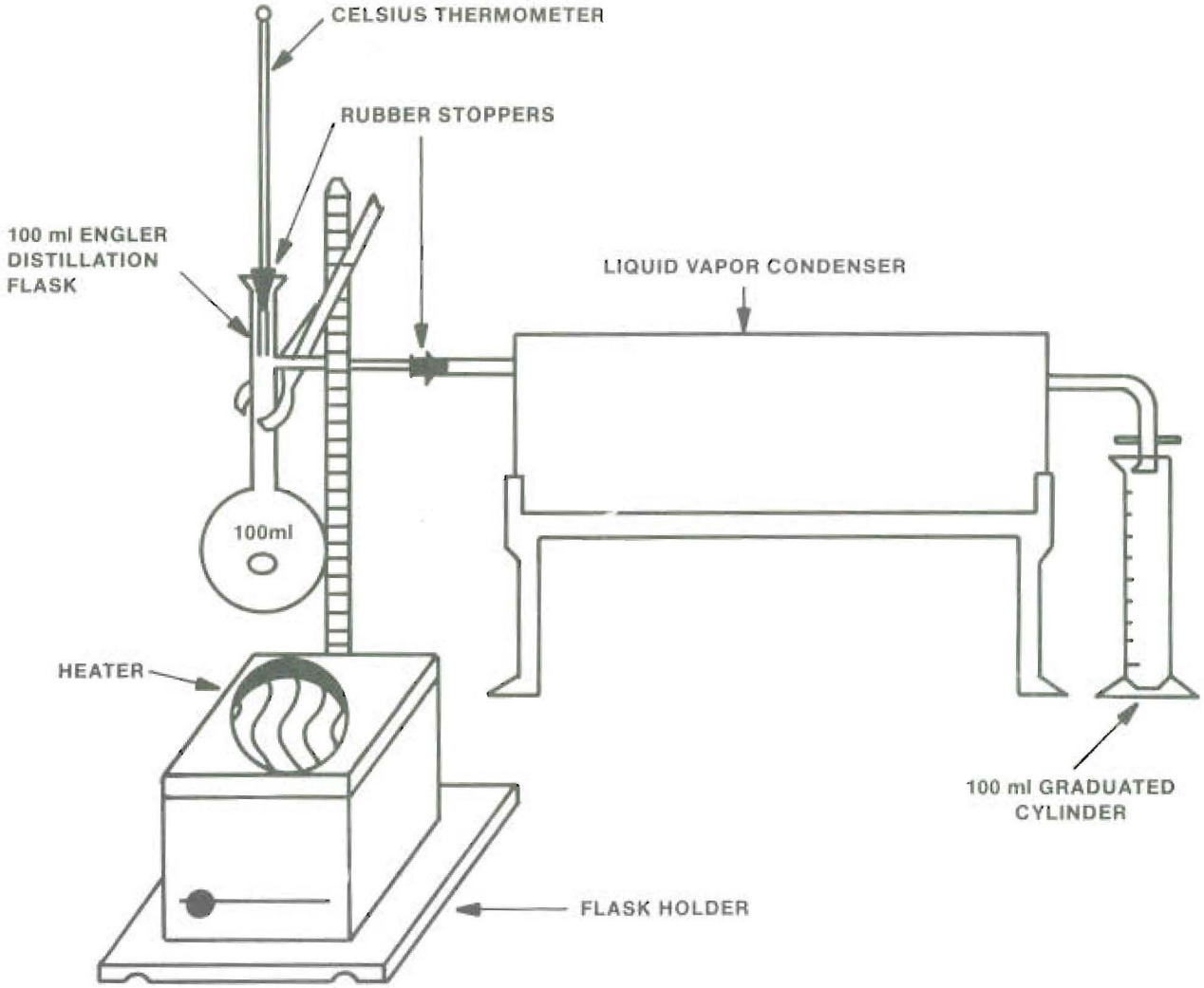

FIGURE 1. SCHEMATIC OF THE ASTM DISTILLATION APPARATUS

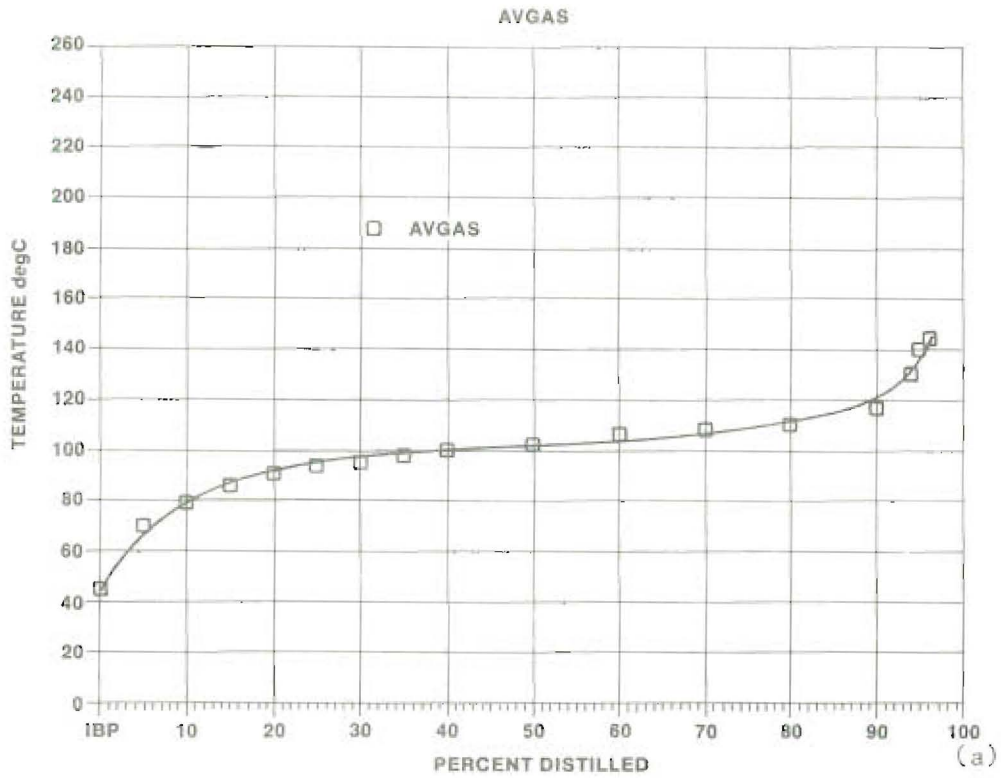

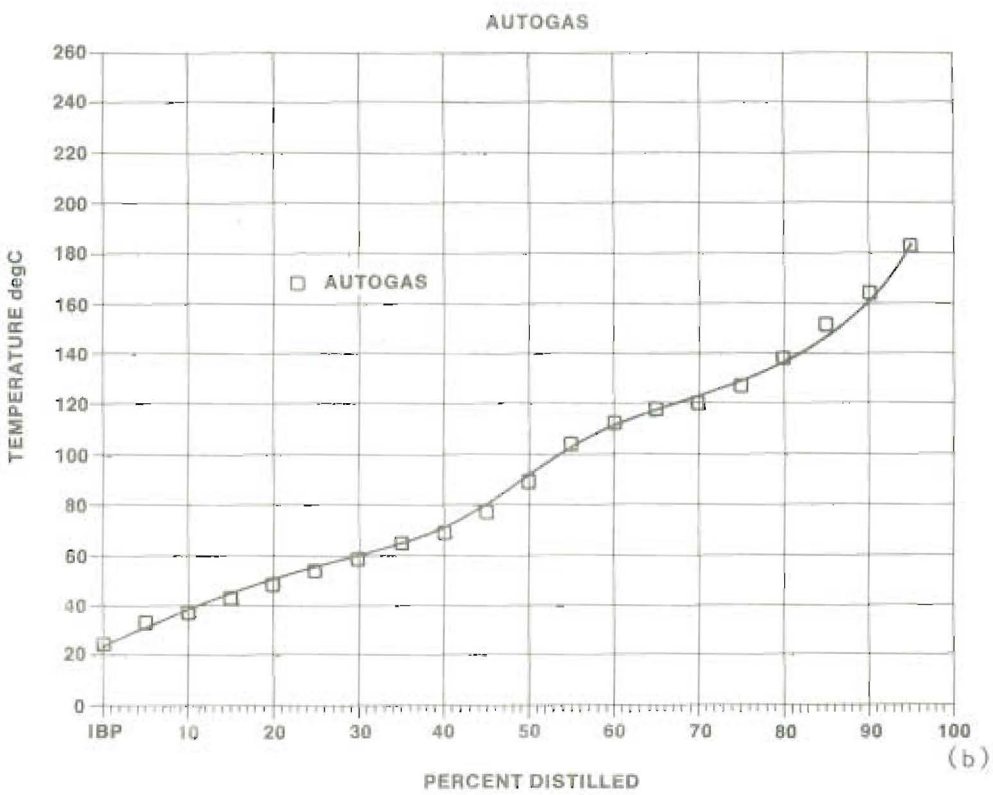

FIGURE 2. TYPICAL DISTILLATION CURVES FOR AVGAS AND AUTOGAS

explains why there are different procedures for determining the octane rating of autogas when compared to avgas.

There are three different octane rating techniques of interest to this program: the Research Method, ASTM standard D-2699; the Motor Method, ASTM standard D-2700; and the Aviation Supercharge method, ASTM D-909. The principle difference between the methods involves changes in the operating speed and temperature to reflect the operating environment to which the fuel will be exposed. The Research Octane Number (RON) is generally applicable to engines which are subject to relatively light duty cycles, where as the Motor Octane Number (MON) (which is related to the Aviation Lean Octane Number) is applicable to engines which are subject to heavy or severe duty cycles. The Aviation Supercharge Octane Number is meant for heavy duty applications where the fuel-to-air ratio is kept rich to help suppress detonation. Table 1 outlines some of the key differences between the techniques. For more detail refer to the appropriate ASTM standards.

TABLE 1. SOME DIFFERENCES BETWEEN THE VARIOUS ASTM OCTANE RATING STANDARDS

TEST VARIABLE	AVIATION SUPERCHARGE METHOD	RESEARCH METHOD	MOTOR METHOD
Engine Speed (RPM)	1800	600	900
Timing (deg BTDC)	45	13	Variable
Oil Temperature (degF)	165	135	135
Coolant Temperature (degF)	375	212	212
Air Temperature (degF)	125	83 (initial)	100
Manifold or Mixture Temperature (degF)	225	N/A	300
Fuel System	Injected	--------Carburetor---------	
Key Variable	Manifold Pressure	-----Compression Ratio-----	

Fuel system designs fall into two broad categories, gravity feed such as found in high wing aircraft and suction feed typical among low wing aircraft, (reference 1). Gravity feed systems typically are the simplest to construct and have the fewest parts. A typical suction feed system not only has engine-driven pump, it has a pilot-operated electrical boost pump and the associated plumbing and hardware (such as check valves) needed to provide a steady fuel supply should an engine-driven pump fail. The greater the number of fittings, bends in the fuel line, etc., the larger the amount of agitation the fuel encounters as it is

transported from the wing to the engine. Increasing the agitation increases the amount of vapor formed which, in turn, increases the probability of vapor lock. Likewise, working the fuel in the pump and recirculation around the pump not only agitates the fuel, it raises the temperature of the fuel as it passes through the pump.

In light of the above, this program studied the use of autogas in representative fuel systems with special attention paid to the effects of increased volatility, fuel system design, and changes in the octane rating. Findings are presented which should help to insure the certification procedures provide the necessary margin of safety with regard to vapor lock prevention.

TEST APPARATUS: Dynamometer

The vapor lock and detonation tests were conducted using an eddy current dynamometer. A Lycoming 0-320 engine was mounted on the dynamometer with a Cessna 172 fuel system. Figure 3 shows the general location of the principle components. The left fuel tank was used for avgas, and the right tank was used for autogas for most of the tests.

The Cessna fuel system was mounted with the fuel tank outlet at the same relative height, compared to the carburetor inlet, as in the C-172 aircraft. The fuel tanks had the same angle as a C-172 setting on the ground. The fuel tanks were modified to incorporate heat exchangers for regulating the fuel temperature. Approximately 20 feet of 3/8-inch diameter copper tubing was installed 1/4 inch from the inside bottom of each tank in a regular pattern. Temperature controllers regulated the supply of an ethelene glycol and water mixture to each heat exchanger in order to maintain the required temperature. The fuel lines to the engine were wrapped with electrical heating tape, and the temperature of the individual sections of the fuel lines were controlled separately; one controller for the avgas lines, one for the autogas lines, and one for the 1/2-inch diameter common line. A 180-degree travel, pneumatic operator was incorporated to quickly move the tank selector remotely. This system allowed vapor lock studies to be conducted with hot fuel in one tank and cold fuel in the other so that recovery from a vapor lock condition could be accomplished without restarting the engine.

Some tests were conducted with the fuel system modified to see how fuel system configuration affected the results (figure 4). An automobile gasoline was tested in the C-172 fuel system used throughout the program as a basis for comparison. The rear fuel line (figure 4A) was separated from the tank and plugged while the tank fitting was capped, leaving only the crossover vent attached to the rear line. A vapor lock test was conducted in this configuration using the same fuel as above. The front line was then disconnected, the rear line reconnected, and the vapor lock sequence repeated.

The right Cessna tank was then removed and a low fuel tank and pump were installed to simulate a suction feed system (figure 4B). The relative height from the fuel tank outlet to the fuel pump inlet was the same as in a Piper Cherokee, PA-28-140. An engine driven fuel pump was installed leaving the entire fuel system from the selector valve intact. This tank had a heat exchanger similar to the one found in the Cessna tanks. A vapor lock series was conducted in this final configuration.

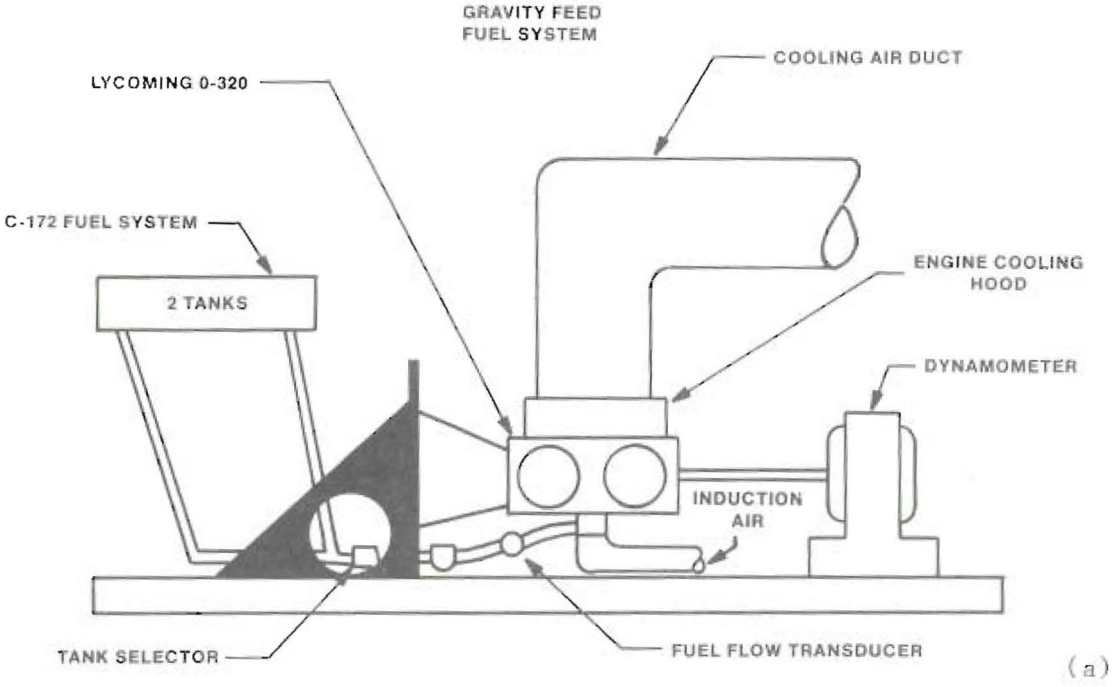

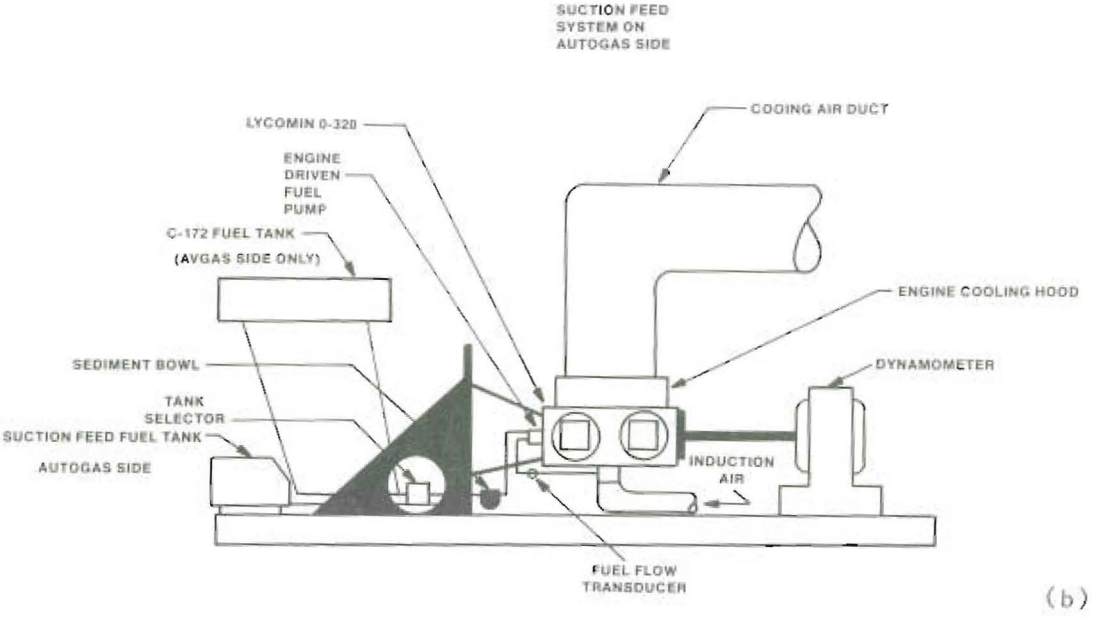

FIGURE 3. GENERAL LOCATION OF THE PRINCIPLE DYNAMOMETER COMPONENTS

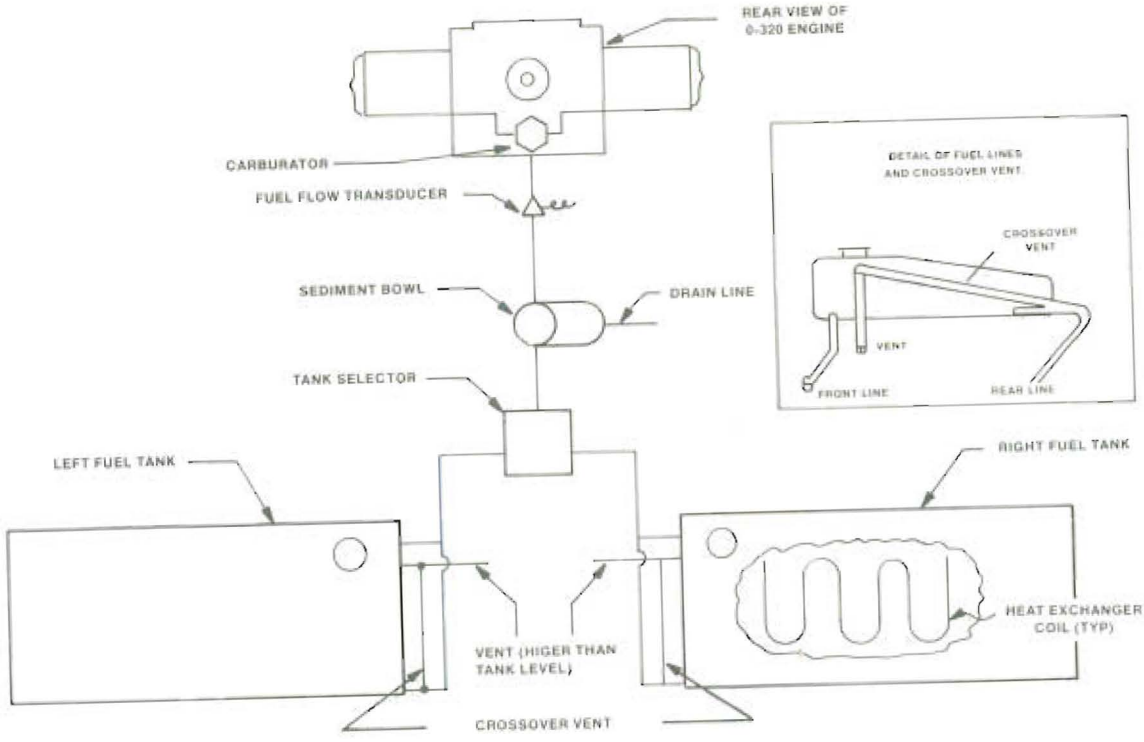

A. Gravity Feed System

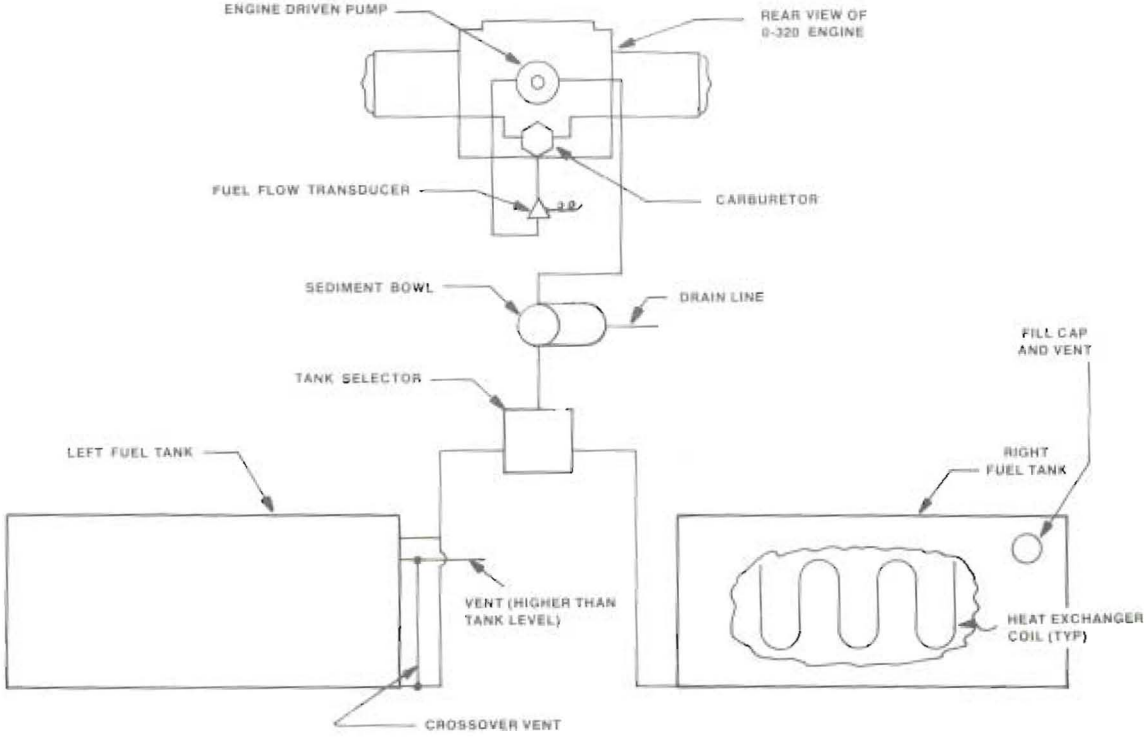

B. Suction Feed System

FIGURE 4. SCHEMATIC OF THE FUEL SYSTEM CONFIGURATION

The Lycoming engine was similar to the O-320 found in a Cessna 172 but was not an airworthy engine and did not match an existing model designation. The engine had an 8.5:1 compression ratio, a carburetor, and was designed to operate on 91/96 avgas (which is no longer available). The engine cooling air was regulated to the proper temperature and pressure for the individual tests and was delivered through a test cell cooling hood. The oil temperature was regulated by an automatic controller which turns on the cooling water at specified temperature. Induction air was supplied through two air conditioners, a device for regulating the humidity, a plenum chamber, and a heater muff. The air conditioners provide the plenum chamber with one inch of water pressure, which was reduced to about 1/2 inch at full throttle. The air could be heated, cooled, dried, or humidified at will. The engine speed and torque could be controlled and measured and recorded automatically. The fuel consumption was measured by a fuel flow system similar to those used in many airworthy aircraft.

When the carbureted engine tests were completed, the engine was converted to a fuel injection type. The sump was changed along with the intake pipes. A fuel injection control unit, four fuel injector nozzles, a high pressure fuel pump, a flow divider with injector lines, and a boost pump were installed. An entire vapor lock test series was completed using the same autogas as was used in the various tank configuration tests discussed above.

The engine was equipped with a Lycoming Detonation Analyzer which consists of vibration pickups mounted on the four lower spark plugs, a timing generator, a junction box, and the electronics which allow one to look at the proper stroke for the cylinder selected. As the operating conditions approach those conducive to detonation, the amplitude of the signal increases. When detonation occurs, the region of high amplitude vibration is fairly wide, and the oscilloscope screen appears to "flash." The number of flashes coincide with the number of times that cylinder detonates. Typically, detonation is reported as the number of flashes per minute.

The Technical Center's dynamometer system consists of the controls and instrumentation package, the absorber and support equipment, and the mechanical assembly. The controls and instrumentation package includes a Dynamometer Control Module (DCM) which allows for regulation of either engine speed or load. The control range extends from about 1000 to 5000 RPM, and about 10 to 2000 ft-lbs torque. A Data Display Module (DDM) is also included in the package. It provides for the display of engine speed, torque, and up to 20 temperatures. The absorber is a Midwest Dynamometer model 1519W eddy current brake. An Electronic Control Module (ECM) supplies and regulates the eddy current field power. This device is a full wave DC power supply with the phase angle of rectification controlled by the condition of the current loop control signal from the DCM. The mechanical assembly consists of the test bed, the drive shaft, the guard, and the fly wheel.

Table 2 lists the data which is recorded on an automatic data acquisition system. During a typical run, the data are recorded every 15 seconds, though the data acquisition system can handle a scan rate of less than a second to several hours. The operator has the ability to trigger an event marker which is recorded along with the other parameters. The detonation data is recorded separately, since it requires some judgment on the part of the operator.

TABLE 2. DATA RECORDED ON THE AUTOMATIC DATA ACQUISITION SYSTEM

DESCRIPTION	UNITS
Engine torque	ft-lbs
Engine speed	RPM
Manifold pressure	inHg (absolute)
Engine cooling air	inH_2O
Fuel pressure at carburetor inlet	inH_2O or psig
Oil pressure	psig
Event marker, operator triggered	VDC
Fuel flow	gph
Throttle position	percent
Mixture position	percent
Tank in use indicator	VDC
Carburetor supply air dew point	degC
#1 cylinder head temperature	degC
#2 cylinder head temperature	degC
#3 cylinder head temperature	degC
#4 cylinder head temperature	degC
Fuel temperature, top of avgas tank	degC
Fuel temperature, bottom of avgas tank	degC
Fuel temperature, top of autogas tank	degC
Fuel temperature, bottom of autogas tank	degC
Fuel temperature, avgas line	degC
Fuel temperature, autogas line	degC
Fuel temperature, sediment bowl	degC
Fuel temperature, carburetor bowl	degC
Oil temperature	degC
Air temperature, carburetor inlet	degC
Air temperature, upstream of carburetor	degC
Cooling air temperature	degC
Air temperature in carburetor area	degC
Carburetor supply air temperature	degC
#1 exhaust gas temperature	degC
#2 exhaust gas temperature	degC
#3 exhaust gas temperature	degC
#4 exhaust gas temperature	degC
Ambient air temperature	degC
Engine driven fuel pump pressure	psig

The RVP and distillation tests are conducted at the Technical Center using the procedures and equipment specified in the appropriate ASTM specifications. The octane measurements and selected RVP tests were conducted at Sun Refining and Marketing, Marcus Hook, Pennsylvania, under contract to the Technical Center.

TEST APPARATUS: Fuel Aging Study

The environmental effects tests were conducted by using eight general aviation wing sections that were mounted on stands designed to hold the wings at the same height from the ground and attitude as would be found when the respective aircraft is parked on a level surface. Two wing sections (one right, one left) from each of the aircraft type are listed below.

AIRCRAFT MODEL	FUEL TANK CONSTRUCTION
Mooney M20B	Wet Wing
Piper Cherokee	Wet Wing, Removable Tank
Piper Comanche	Bladder Tank
Cessna 172	Metal Tank Within Wing

These selections represented the four main types of fuel tank configurations found in general aviation. All the tanks were painted white to eliminate the variable of different heat transmission caused by various colors. The wings were arranged as shown in figure 5, in a curbed, concrete pad, which measured 16 by 36 feet with the leading edges facing south. Each wing was instrumented with two thermocouples to measure the fuel temperature. As shown in figure 5 detail, one thermocouple was located one inch above the bottom of the tank and the other thermocouple was adjustable so that it could be set at a point approximately one inch below the top of the fuel level. Each tank was equipped with a valve from which samples were drawn for RVP and octane testing. The RVPs were initially measured weekly. As the fuel aged, the decay in RVP slowed so the interval between sampling the fuel in the tank was gradually increased to 16 days. This increased the length of time the RVP of the fuel sample could be monitored.

Additional instrumentation included an anemometer and a thermocouple to measure ambient air temperature, which were both mounted on a post located approximately 6 feet from the concrete pad. The anemometer was located 5 feet above ground level, and the ambient temperature thermocouple, shaded by a metal shield was located 3 feet above ground level. An automatic data recording system was provided to record the 16 tank temperatures, ambient air temperature, wind speed, and direction on an hourly basis.

TEST APPARATUS: Flight Tests

A series of flight tests was conducted under contract for the Technical Center. In these tests, two general aviation aircraft were instrumented to determine the effects of the operational mode on the temperature of the fuel in the aircraft fuel systems. The instrumentation consisted of thermocouples placed throughout the aircraft fuel system and the engine cowling and one thermocouple placed in the free stream to determine the ambient temperature. Where local air velocities warranted, total temperature probes were used. The signals were fed into an

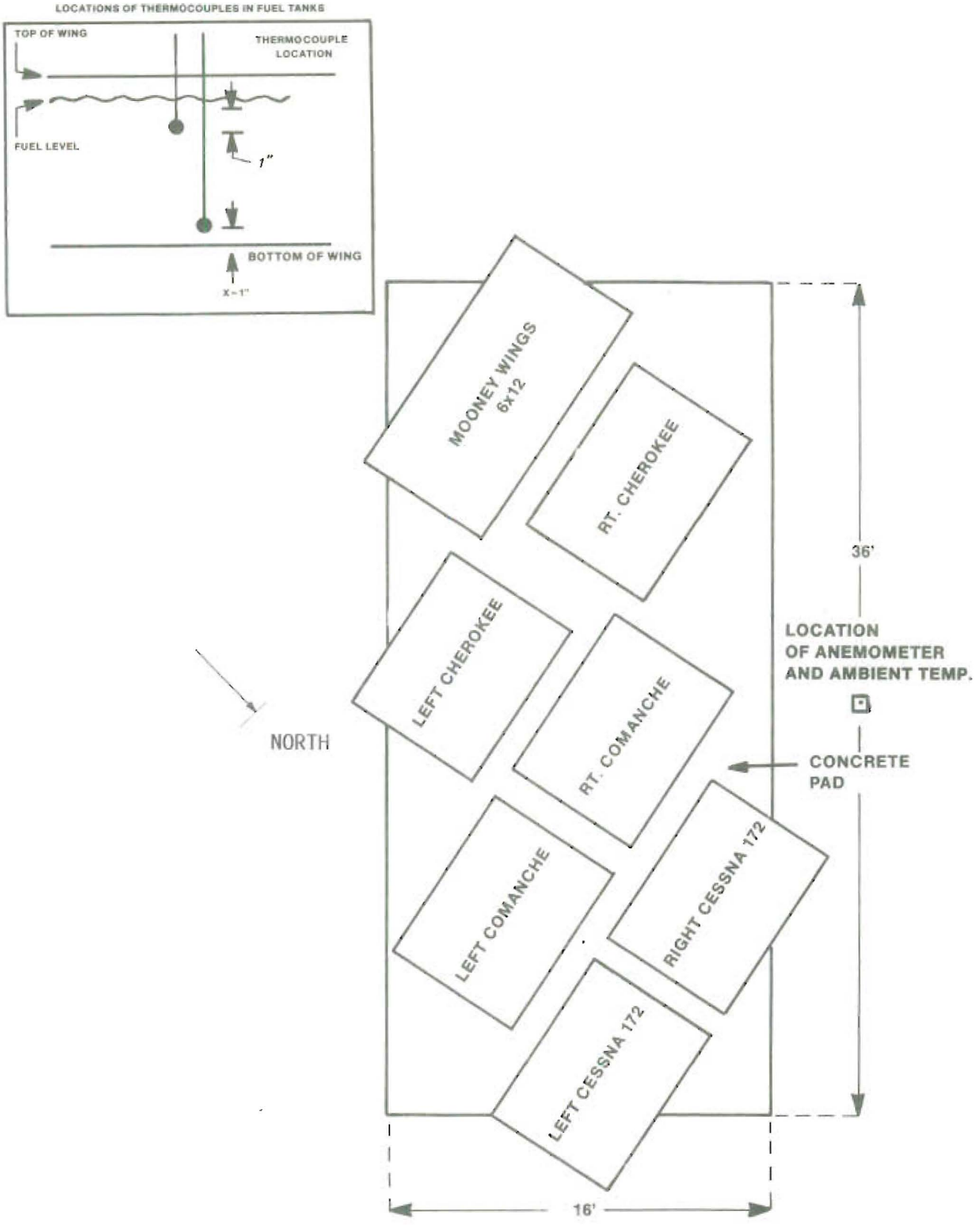

FIGURE 5. LAYOUT OF WING SECTIONS USED IN FUEL AGING STUDY

automatic data acquisition system which operated off an inverter which was powered by the aircraft electrical system. During the course of the flight, the data was stored in the data acquisition system, then it was transferred upon landing to either hard copy or magnetic tape for further analysis.

The aircraft used for this study were a Piper Cherokee (PA-28-140) and a Cessna 172 (C-172). The fuel used throughout the flight test was 100LL avgas. The general locations of the test apparatus in the respective aircraft are shown schematically in figure 6.

The times for engine start, takeoff, reaching attitude (in steps of 1000 feet), beginning descent, landing, and engine shutdown were recorded manually as were other pertinent observations about ambient conditions, the tank in use, and in the case of the Cherokee, fuel boost pump operation.

The aircraft for these tests were operated under the experimental category by Admiral Air Services of Woodbine, New Jersey.

TEST PROCEDURES

The procedures used during this program are broken into six general areas: baseline tests, vapor lock tests, detonation surveys, horsepower correction computations, fuel aging studies, and flight tests. These procedures were often modified to obtain specific goals and, where necessary, the modifications are discussed in the appropriate results section.

TEST PROCEDURES: Baseline Tests (Dynamometer)

The baseline performance tests were conducted as follows.

1. Fuel the tanks with avgas, draw a sample, and measure the RVP and distillation curve.

2. Start the engine and allow the oil to rise to operating temperature. Conduct a magneto check, then set the engine cooling air temperature and pressure so that the cylinder head temperatures are in the normal operating range (175 degrees to 200 degrees Celsius or 350 degrees to 400 degrees Fahrenheit).

3. Set the dynamometer to the speed control mode and select an engine speed of 2000 RPM and a manifold pressure of 20 inHg. If necessary, set the mixture to full rich.

4. Allow conditions to stabilize, then take a reading manually.

5. Increase (or decrease as appropriate) the manifold pressure in steps of 2 inHg to cover the full range of manifold pressures. Repeat step 4 for each manifold pressure selected.

6. Increase the engine speed in steps of 100 RPM to cover the range of engine speeds through 2700 RPM. Repeat steps 4 and 5 for each engine speed.

7. Gradually reduce the power and allow the engine to cool. Perform a magneto check and shut the engine down using the mixture control.

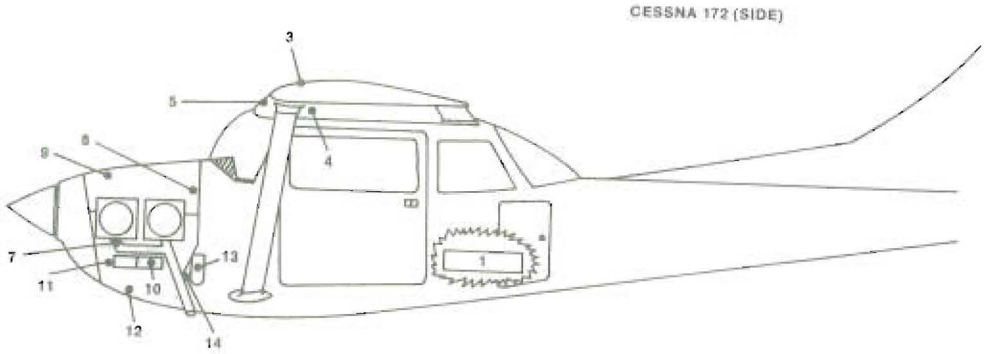

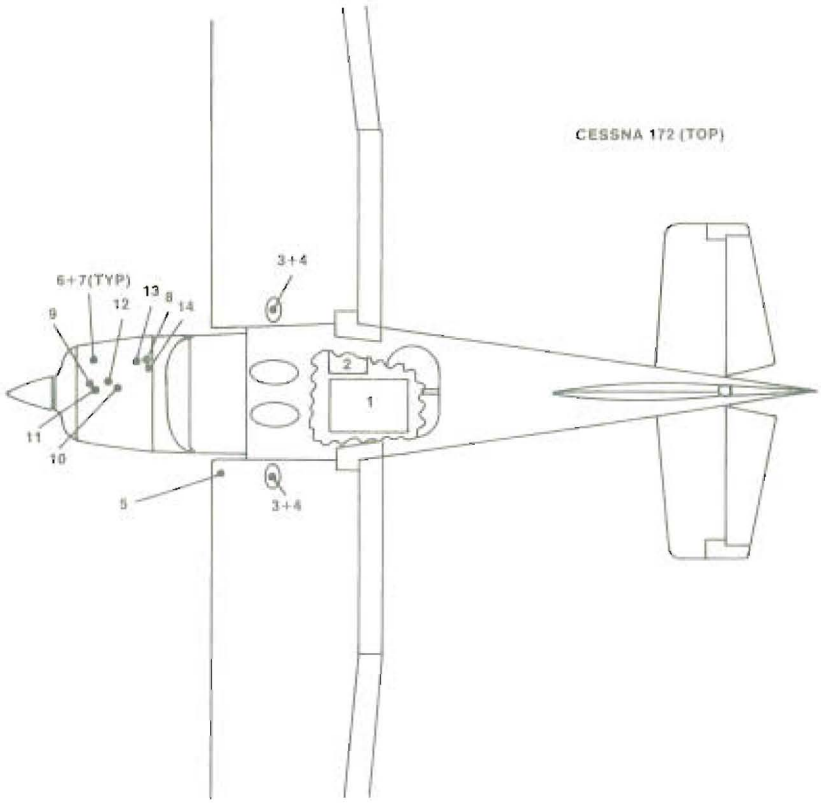

1-COMPUTER
2-POWER SUPPLY
3-UPPER FUEL TANK TEMPERATURE SENSOR
4-LOWER FUEL TANK TEMPERATURE SENSOR
5-AMBIENT AIR TEMPERATURE
6-CYLINDER HEAD TEMPERATURE (EACH CYLINDER)
7-EXHAUST GAS TEMPERATURE (EACH CYLINDER)
8-UPPER FIREWALL TEMPERATURE
9-UPPER COWLING TEMPERATURE
10-CARBURETOR FLOAT BOWL FUEL TEMPERATURE
11-CARBURETOR AREA AIR TEMPERATURE
12-LOWER COWLING TEMPERATURE
13-SEDIMENT BOWL FUEL TEMPERATURE
14-LOWER FIREWALL TEMPERATURE
15-FUEL PUMP INLET TEMPERATURE
16-FUEL PUMP OUTLET TEMPERATURE

FIGURE 6. LOCATION OF THE TEST APPARATUS FOR THE FLIGHT TESTS (1 of 2 Sheets)

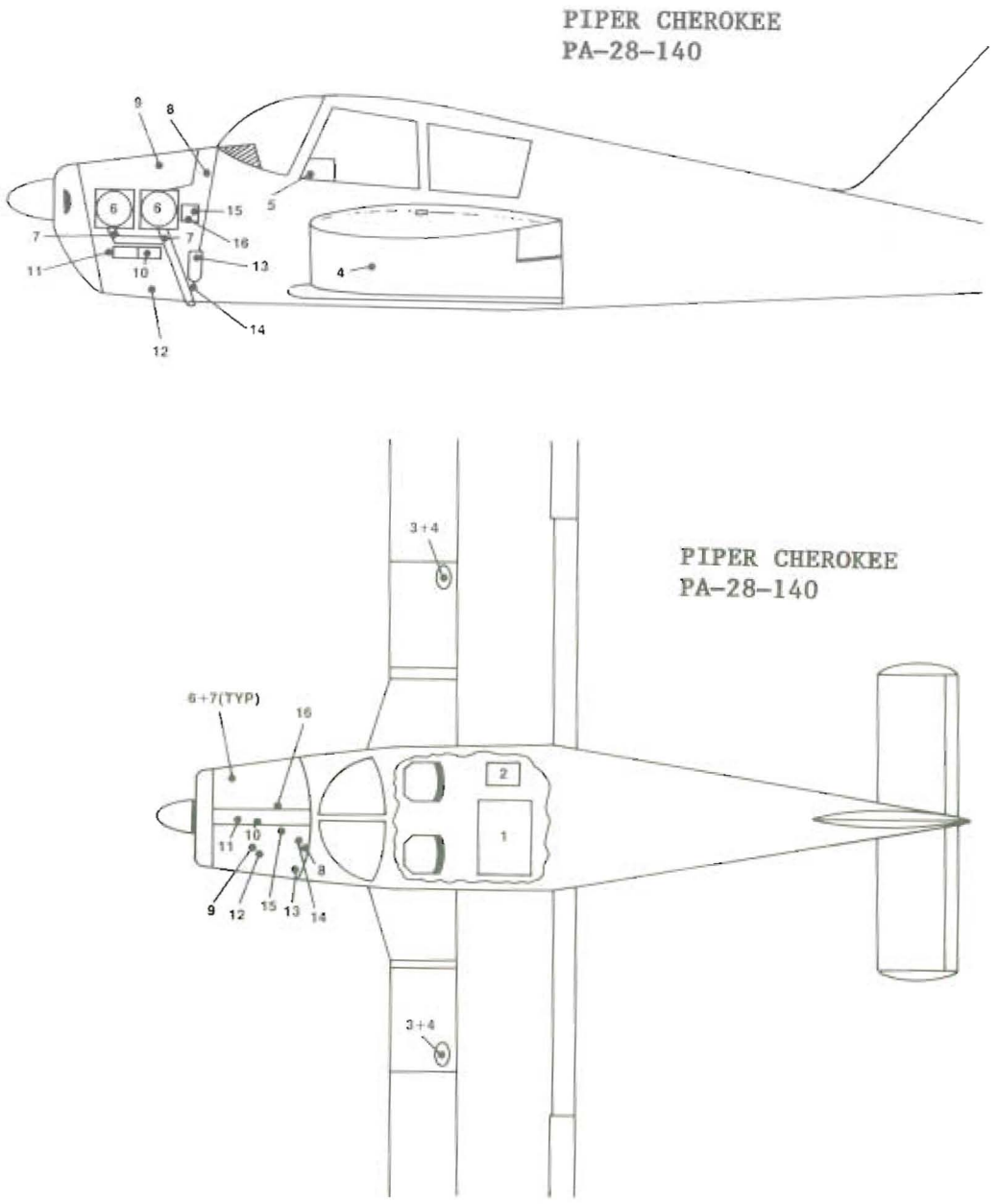

1-COMPUTER
2-POWER SUPPLY
3-UPPER FUEL TANK TEMPERATURE SENSOR
4-LOWER FUEL TANK TEMPERATURE SENSOR
5-AMBIENT AIR TEMPERATURE
6-CYLINDER HEAD TEMPERATURE (EACH CYLINDER)
7-EXHAUST GAS TEMPERATURE (EACH CYLINDER)
8-UPPER FIREWALL TEMPERATURE
9-UPPER COWLING TEMPERATURE
10-CARBURETOR FLOAT BOWL FUEL TEMPERATURE
11-CARBURETOR AREA AIR TEMPERATURE
12-LOWER COWLING TEMPERATURE
13-SEDIMENT BOWL FUEL TEMPERATURE
14-LOWER FIREWALL TEMPERATURE
15-FUEL PUMP INLET TEMPERATURE
16-FUEL PUMP OUTLET TEMPERATURE

FIGURE 6. LOCATION OF THE TEST APPARATUS FOR THE FLIGHT TESTS (2 of 2 Sheets)

TEST PROCEDURES: Detonation Surveys (Dynamometer)

The onset of detonation was measured as follows.

1. Fuel the tank with the test fuel. Draw a sample and measure the RVP, the distillation curve, and, as appropriate, the octane rating using the research and motor methods.

2. Start the engine and allow the oil to reach normal operating temperature. Perform a magneto check and set the cowling air temperature and pressure to obtain cylinder head temperatures at or above the maximum limit (525 degrees Fahrenheit).

3. Set the mixture to full rich if necessary; increase the engine speed to 2300 RPM and set the manifold pressure to 20 inHg. Allow conditions to stabilize. Observe for signs of detonation.

NOTE: Whenever detonation occurs, trigger the event marker, and make a note of the number of flashes per minute detected on the Lycoming detonation analyzer.

DO NOT OPERATE AT SETTINGS WHICH RESULT IN DETONATION FOR EXTENDED PERIODS OF TIME.

4. If no detonation occurs, reduce the fuel flow in steps of 5 percent, allowing conditions to stabilize between reductions in fuel flow. Repeat until detonation or lean misfire occurs.

5. Reset the mixture to full rich, and increase manifold pressure in increments of 2 inHg until full throttle. Repeat steps 3 and 4 for each setting selected.

6. Increase the engine speed in steps of 100 RPM up to 2700 RPM. Repeat steps 3, 4, and 5 for each setting selected.

7. Reduce the power setting and allow the engine to cool. Perform a magneto check, and shut the engine down using the mixture control.

TEST PROCEDURES: Vapor Lock Tests (Dynamometer)

The vapor lock tests were conducted in the following manner.

1. Fuel the tank with the proper test fuel. Select the desired initial tank temperature, and turn the tank heaters on. Allow the fuel in the tank to rise to the desired temperature.

2. Start the engine and allow the oil to rise to operating temperature. Perform a magneto check. Make sure the engine cooling air temperature and pressure are set to the desired point.

3. Set the engine speed and manifold pressure to obtain a fuel flow rate of 2.5 gallons per hour (gph). Allow conditions to stabilize. Observe for signs of vapor lock.

4. If vapor lock occurs (as determinded by power interruption), switch to the other tank; trigger the event marker; and note the temperature in the fuel lines, the sediment bowl, and the carburetor bowl. As conditions stabilize, turn the line heaters off.

If vapor lock does not occur, perform step 5, otherwise continue with step 6.

5. Turn the appropriate line heaters on to a setting of 150 (the line heaters are proportional to the temperature of the outside wall of the fuel lines; the inside wall never reaches this temperature). Observe for signs of vapor lock.

If vapor lock does not occur within five minutes, set the line heaters to 250. Terminate the run if the fuel temperature exceeds 75 degrees Celsius.

If vapor lock occurs, perform step 4.

6. Change the manifold pressure and engine speed to increase the fuel flow in increments of 2.5 gph until maximum power (usually 13.5 gph). Allow conditions to stabilize; observe for signs of vapor lock; and repeat steps 4 and 5 as necessary.

7. If desired, select one of the above fuel flows and repeat that data point. Make note of any significant changes that occurred between the initial data point and this final data point.

8. Reduce the power, and allow the engine to cool. Perform a magneto check, then shut the engine down by setting the mixture control to full lean.

9. Draw a sample of gasoline from the tank in use and measure the RVP. If a drop of more than 3 psi is measured between the initial RVP and the posttest RVP, determine the distillation curve.

10. Prepare a time history plot of the various fuel system temperatures and note the point where the individual temperature begins to rise abruptly. This coincides with the onset of vapor lock. Compare this temperature with the onset of vapor lock for fuels with different Reid Vapor Pressures and initial tank temperatures.

TEST PROCEDURES: Horsepower Correction Computations

The horsepower measured will vary from day to day depending on the atmospheric pressure and the temperature of the air reaching the carburetor inlet. To make valid comparisons, the horsepower is corrected to what would be expected at standard atmospheric temperature and pressure. The computations were performed using equations found in reference 2.

The calculated horsepower is determined from the torque and engine speed using the following relationship:

$$hp = \frac{RPM \times Torque}{5252}$$

where the torque is in ft-lbs.

The expected horsepower for standard sea level conditions is approximated by the following relationship:

$$hp_{SL} = \frac{hp \times 0.9}{ADR - 0.1}$$

where the air density ratio (ADR) is determined from the ambient atmospheric conditions using:

$$ADR = 17.336\ P_{amb}/T_{amb}$$

where P_{amb} is in inHg absolute and T_{amb} is in degrees Rankine.

TEST PROCEDURES: Fuel Aging Studies

One of the wing sections used in this survey was filled to capacity with a test fuel. A sample was immediately drawn, and the RVP was measured. In conjunction with the detonation surveys, the test fuel was tested for its octane rating at this time.

Periodically, samples were drawn from the wings, and the RVP of the samples were determined. Initially, the samples were drawn a few days apart. As the test fuel aged and the change in RVP with time decreased, the time between sampling was extended to approximately two weeks.

After the RVP of a sample stabilized, or just prior to exhaustion of the test fuel in the wing, a sample is drawn, and the octane rating was determined.

Time history plots were prepared which compare the rate of change with peak tank temperatures for the period between samples.

TEST PROCEDURES: Flight Tests

Both aircraft were operated under flight conditions similar to what one might expect to experience during normal usage. A run sheet was prepared for each flight listing the ambient conditions, tank in use, operational phase, tank fill level, and the times as appropriate. The data acquisition system was initialized and the engine started. The engine was operated until the oil was at operating temperature, then the operation of the magnetos, flight control systems, and instruments was checked prior to takeoff. Upon landing, the aircraft was taxied to the flight operations building, the engine shut down, and the data transferred as necessary.

The types of operations were broken into four phases. Phase 1 consisted of an engine start, five touch and goes, an engine shutdown, a hot soak period of 10 to 15 minutes, a second engine start, five more touch and goes, a climb to 5,000 feet MSL (Woodbine has a field elevation of 39 feet MSL), a period of maneuvers at altitude for up to 20 minutes, and a descent to landing and shutdown. Phase 1 was designed to approximate a flight profile during a typical training operation. Phases 2, 3, and 4 were designed to show the effect of altitude on the temperature in the fuel system. These phases all consisted of an engine start, takeoff, climb to altitude, cruise for a minimum of 50 minutes, descent to landing, and shutdown. The Phase 2 flights were conducted at 1,000 feet MSL; Phase 3 flights were conducted at 3,000 feet MSL; and Phase 4 flights were conducted at 5,000 feet MSL. The ambient temperature at the field ranged from 3 degrees Celsius to 38 degrees Celsius (38 to 100° F).

In addition to the above flights, the C-172 was flown to its absolute ceiling using the best rate of climb speed (V_y) and the best angle of climb (V_x). The ambient temperature at the field was 10° C and -3° C, respectively. These tests were conducted to see if the reduced air density at altitude would result in higher fuel temperatures despite the reduced air temperatures at altitude. The V_y and V_x flights were intentionally conducted on cooler days to avoid overheating the engine. The mixture was leaned as necessary to obtain smooth operation at altitudes above 5,000 feet MSL.

The automatic data acquisition system was set to take a reading every 30 seconds during the Phase 1 and the V_y flights. The scan rate was four times a minute for the V_x flight, and it was set to once a minute for the Phase 2, 3, and 4 flights.

SUMMARY OF RESULTS

BASELINE TESTS: Avgas

A series of tests were conducted on the dynamometer to establish operating proficiency and familiarity with the engine's behavior. These tests were conducted with 100LL avgas, which had an RVP of 5.3 psi and an IBP of 42 degrees Celsius.

The first test sequence determined which cylinder had the leanest fuel-to-air ratio. This information is useful in predicting which cylinder would detonate first, and it provided a feel for the fuel consumption at a given power setting. For this sequence, the leanest cylinder was determined by looking at exhaust gas temperature (EGT) crossover for each cylinder. As the mixture is leaned, the EGT rises until the cylinder is operating with a stoichiometric fuel-to-air ratio. As the mixture is leaned further, the EGT drops until lean misfire occurs. The number two cylinder consistently behaved as though it had the leanest mixture, and during subsequent tests it was typically the cylinder for which detonation was first detected.

An attempt was made to induce vapor lock in the C-172 fuel system with the same sample of avgas as was used in the above test sequence. The fuel in the tank was heated to 43° C (110° F), takeoff power selected, and the engine was allowed to stabilize in this configuration. The line heaters were then turned on, and the system temperatures were monitored. This sequence of events was terminated when the sediment bowl temperature reached 75° C (167° F), not because the engine vapor locked. During this sequence, the fuel flow became erratic when the sediment bowl temperature exceeded the IBP of the fuel (42° C). Since the sediment bowl is just upstream of the fuel flow transducer, the temperature of the fuel passing through the transducer is close to the temperature of the fuel in the sediment bowl. This leads to the conclusion that a significant amount of vapor is generated when the fuel temperature exceeds the IBP of the fuel. Likewise, the fuel pressure fluctuated whenever the temperature in the system exceeded the IBP of the fuel.

A vapor lock sequence was performed using avgas in the low wing (suction feed) configuration. The fuel temperature in the tank was 43° C (110° F) and the full range of fuel flows were tested. Vapor lock was encountered only at takeoff power (13.5 gph) and with the line heaters set at the 250 setting. This was a more severe case than would be found in a normal operation, but it demonstrates the effect of changes in fuel system configuration.

An attempt was made to induce detonation while using the same batch of 100LL avgas as was used in the two tasks above. It was unsuccessful even though the cylinder head temperatures (CHTs) and the oil temperature were at the limits for this engine, the carburetor inlet air temperature was above 100° F, and the power and mixture controls were adjusted to obtain the most severe condition possible. This was as expected since the engine was designed to operate on 91/96 octane avgas.

Two runs were conducted to generate a performance table, establish confidence in system stability (by repeating points), and to investigate what effect, if any, changes in the fuel system had on the power developed. These tests were conducted using 100LL avgas with an RVP of 6.1 psi and an IBP of 46° C. Over the range of power settings used (from cruise to takeoff) no significant differences were detected as a consequence of changes in the fuel temperature, the tank in use (left or right), or repeating the test later in the day. In all cases, the horsepower developed and the brake specific fuel consumption (BSFC) were normal for a Lycoming O-320.

Reference 3 contains a more detailed analysis of the tests which were conducted as a part of this baseline.

DETONATION SURVEYS: Autogas

Six commercially available fuels were tested for detonation. Three were premium unleaded, and three were regular unleaded autogas. Samples of these fuels were then placed in the wing tanks as part of the fuel aging study. Originally, the Technical Center intended to conduct detonation tests on the fuels which had been aged in the wings described in the Fuel Aging Studies Section, but an insufficient amount remained after aging to perform a detonation run.

There is a strong relationship between the MON and the occurrence of detonation. (See reference 3 for more detail.) As the MON increases, the tendency to detonate decreases. There is a similar relationship between the RON and the onset of detonation, but it is not as defined as the relationship with the MON.

Table 3 shows the effects of aging autogas in aircraft tanks (described in the Fuel Aging Studies Section) on the MON and RON. The MON increased an average of 0.5 with the range of changes lying between +1.6 to -0.5. The RON increased an average of 0.7, and the changes ranged from 1.7 to -0.3. These results agree with the data reported in reference 4. While the changes encountered are not large, they are significant since a small change in the MON resulted in a large change in the incidence of detonation for this installation. The changes encountered would not be expected to cause a problem for an engine certified for 80/87 octane avgas.

TABLE 3. THE EFFECTS OF AGING ON THE OCTANE RATINGS

AUTOGAS SAMPLE ID	ASTM CLASS	AGE (MONTHS)	MON	RON	R+M 2	RVP
CRU	E	0	83.2	91.4	87.3	13.1
CRU	E	6	83.4	91.0	87.2	9.4
CPU	E	0	87.5	96.4	92.3	13.6
CPU	E	6	89.1	98.1	93.6	6.6
ERU	D	0	82.5	94.0	88.3	14.0
ERU	D	5	82.6	93.7	88.2	6.0
EPU	D	0	86.9	98.0	92.5	12.5
EPU	D	5	87.8	99.0	93.4	9.0
HRU	E	0	83.5	91.6	87.5	13.3
HRU	E	6	83.0	92.2	87.6	7.7
HPU	E	0	87.0	97.9	92.5	12.7
HPU	E	6	87.6	98.5	93.1	5.5

During the detonation runs, the engine was set at a specific power setting using avgas before switching to the autogas being tested. The horsepower developed on either fuel was compared and, unless there was detonation, there was no significant difference. Light detonation (five flashes per minute or less) could occur without noticeably affecting either the horsepower, the EGT, or the CHT, which was unexpected. Unless the detonation was severe, the EGT and CHT would show only slight changes which could go unnoticed if the operator did not expect detonation was occurring. Not only was light to moderate detonation difficult to detect using the instrumentation normally found in an aircraft, but even in the test cell environment, detonation was inaudible unless it was severe. In the nosier aircraft environment, one could not be expected to detect detonation. As with the onset of vapor lock, the EGT probes in this installation were slow to respond to onset of severe detonation.

All six commercially available autogas fuels detonated at one or more power settings, whereas the 100LL avgas used to set the data points did not exhibit a tendency to detonate. There was one exception, and that particular sample was 2-year-old avgas that was being used during some maintenance runs early in the program. The Technical Center was unable to repeat this point and it is inconclusive as to whether the age of the fuel was the cause of the detonation.

Occasionally during switchover from avgas to autogas, a brief period of detonation was detected. It appeared to be associated with the mixing of the two fuels. A number of samples were prepared where different percentages of avgas were mixed with a regular unleaded autogas. These samples were tested to determine the octane rating of the blend, and the results are listed in table 4. As can be seen, mixing avgas and autogas results in a higher octane number than the autogas alone, so a reduction in octane number is not the cause of detonation. One possible explanation for this phenomena is maldistribution during the switch-over from avgas to autogas.

TABLE 4. PROPERTIES OF SEVERAL MIXTURES OF AVGAS IN REGULAR UNLEADED AUTOGAS

SAMPLE ID	PERCENT AVGAS	RVP (psi)	RVP (psi)	RON	MON	R+M/2
ERU	0	14.0	14.0	94.0	82.5	88.3
SM1	10	9.0	9.1	96.0	84.3	90.2
SM2	20	8.8	8.8	97.8	87.0	92.4
SM3	33	8.6	8.6	98.0	87.1	92.6
SM5	50	7.9	7.8	100.1	91.1	95.6

During the vapor lock portion of the program, light detonation was occasionally detected when operating at cruise power settings on regular unleaded autogas. The mixture was not leaned during the vapor lock runs as it would be in flight. Since leaning aggravates detonation tendencies, one would expect to encounter detonation when operating an engine designed for 91/96 octane avgas on regular unleaded autogas. Figure 7, which contains the results from two of the detonation runs, shows that detonation is encountered when operating at 24 inHg and 2400 RPM or approximately 75 percent power. Efforts are underway to certify select 91/96 octane aircraft engines on autogas, with the use of alcohol-water injection to suppress detonation during takeoff and climb. It may be necessary to restrict such operations to premium unleaded autogas.

The design of the detonation experiments called for the engine cooling air temperature to be at 38° C. While testing sample EPU, the boiler in the cooling air blower failed. A repeat of several of the data points where detonation had occurred (with sample EPU and elevated cooling air temperatures) resulted in only incipient detonation. This demonstrated that the engine cooling air temperature has a significant effect on detonation. It was also observed that the higher the humidity of the carburetor inlet air the less likely detonation would occur.

During the vapor lock studies, detonation would occasionally occur as the fuel to air ratio leaned with the onset of vapor lock. More often, leaning would occur so rapidly that detonation could not be detected even if it was expected. Following one particularly severe case of detonation during a vapor lock run, a boroscope was used to inspect the cylinders. Within the 45 seconds that detonation had occurred, most of the deposited lead had been removed from the piston and cylinder heads, and the top of the piston had begun to oxidize. No other damage was noted, and no repairs, except for cleaning debris from the spark plugs, were made.

VAPOR LOCK TESTS: Autogas

Sixteen fuels were tested for vapor lock. Two fuels were 100LL avgas, and one was a specially prepared blend of leaded autogas which was leftover from a previous study. The remaining thirteen fuels were unleaded autogas purchased from retailers in the vicinity of the FAA Technical Center.

SAMPLE CRU, MON -83.2, RON-91.4

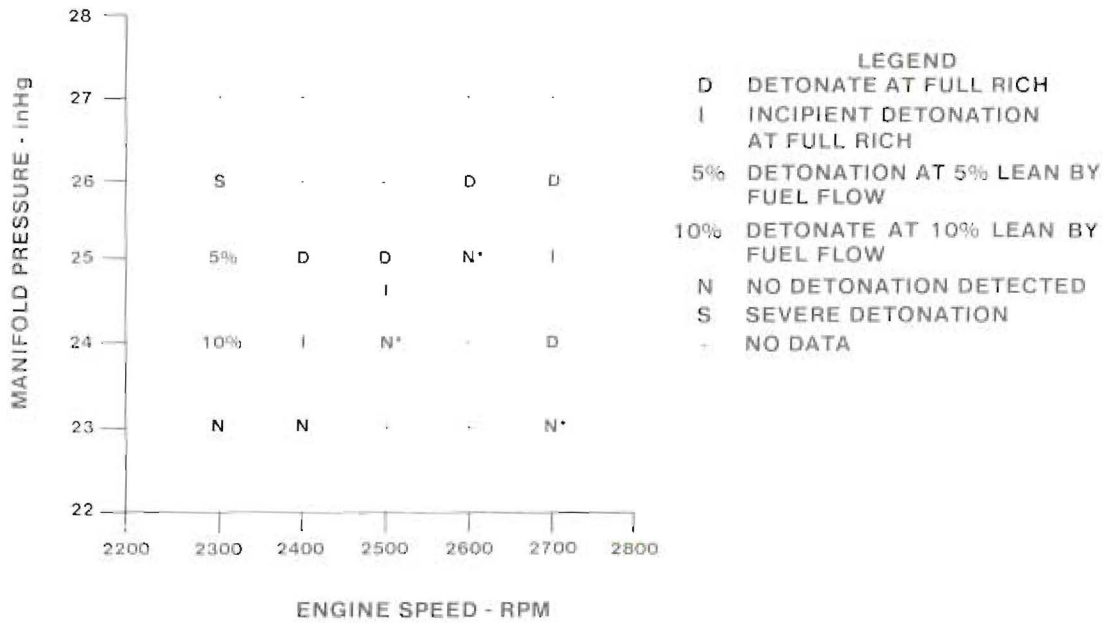

*FUEL FLOW METER UNRELIABLE DUE TO VAPOR FORMATION, THEREFORE NO LEAN SETTINGS ABOVE 2400 RPM. IT IS POSSIBLE THAT DETONATION WOULD HAVE OCCURRED AT THESE POINTS IF THE OPERATORS COULD HAVE LEANED THE MIXTURE AT THESE POINTS.

ERU, MON-82.5, RON-94.0

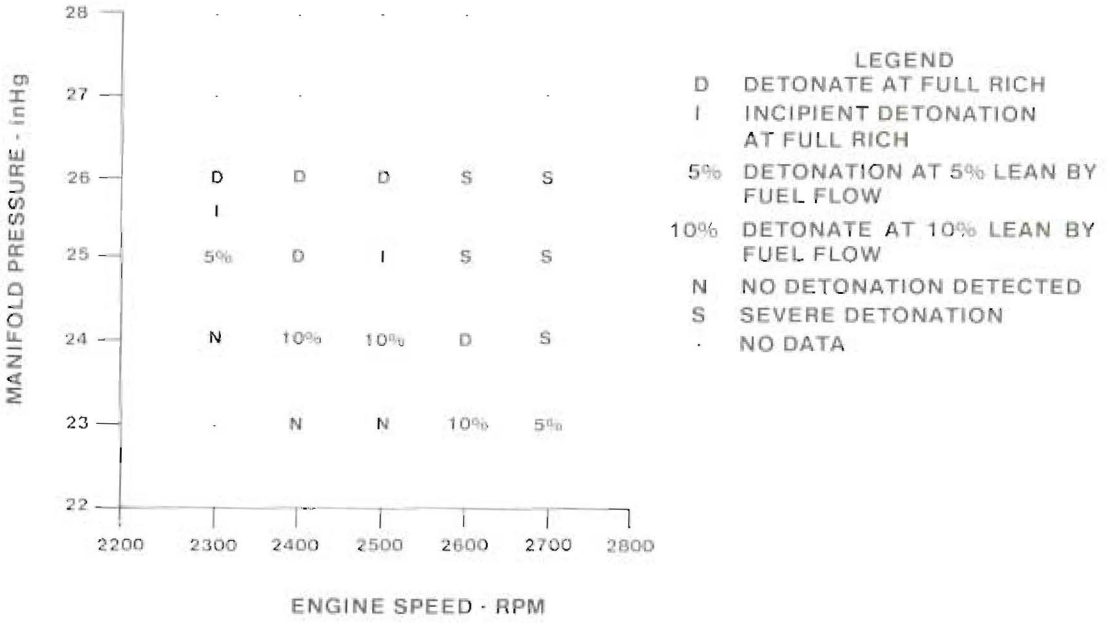

FIGURE 7. SELECTION RESULTS FROM THE DETONATION SURVEYS

Table 5 lists the ASTM volatility class; RVP; IBP; and, when available, the performance numbers for all of the fuels tested. As mentioned earlier, the Technical Center was unable to induce vapor lock in the C-172 fuel system with the 100LL avgas but was able to induce vapor lock in the suction feed system when using 100LL. All of the fuel samples were stored in sealed barrels prior to being tested.

TABLE 5. PROPERTIES OF THE GASOLINES TESTED FOR VAPOR LOCK

	ASTM	TECH CENTER		SUN REFINING AND MARKETING DATA			
FUEL ID	VOLATILITY CLASS	IBP (degC)	RVP (psi)	RVP (psi)	RON	MON	R+M/2
HPU	E	25	12.2	12.8	97.9	87.0	92.5
HRU	E	25	12.4	13.3	91.6	83.5	87.5
CPU	E	25	13.3	13.6	96.4	87.5	92.2
CRU	E	26	11.8	13.1	91.4	83.2	87.3
EPU	D	26	12.7	12.6	98.0	86.9	92.5
ERU	D	25	14.1	14.0	94.0	82.5	88.3
TPU	D	25	11.3	11.3	97.8	86.2	92.0
SBL	-	30	13.6	--	--	--	--
MPU	C	35	9.3	--	--	--	92.5
MRU	C	35	10.0	--	--	--	87.5
APU	C	33	10.0	--	--	--	93.0
ARU	C	36	10.0	--	--	--	87.5
SPU	C	32	10.9	--	--	--	93.5
SRU	C	32	10.5	--	--	--	87.0
100LL	-	42	5.3	--	--	--	--
100LL	-	43	6.1	--	--	--	--

Typically, the autogas tank was filled to the desired level and the fuel heated to the desired temperature. The engine cooling air temperature and pressure were set at 38 degrees Celsius and 2.3 in H_2O, respectively, the engine oil temperature set to 85° C (185° F), and the carburetor inlet temperature was set at 38° C. The range of fuel temperatures was from 21° C to 49° C (70 to 120° F). Each fuel was tested at a minimum of three initial tank temperatures, and if sufficient sample remained, it would be tested at a fourth temperature. Two fuels were tested at their IBP's.

Each fuel was tested at the six fuel flow rates listed in the test procedure section for each initial tank temperature. At the end of the run, one of the fuel flow rates was repeated to see if changes were apparent in either the temperature or time required for vapor lock to occur. For the most part, there

were no significant differences between the initial and repeated data point. The 2.5 and 5.0 gph settings had a large variation between the initial and repeat data points, but this was more a consequence of the random percolation phenomena (where the cooler fuel would run down one leg of the C-172 fuel system and heated fuel return via the other) than short-term aging at an elevated temperature. At these lower fuel flows, vapor lock could occur either very early or not at all. In many cases, either the initial or the repeat data points resulted in vapor lock, while the other data point did not.

When reviewing the following data, keep in mind the sediment bowl temperature was normally the more consistent indicator of the onset of vapor lock. This reinforces the impression that for a given fuel system, the formation of vapor at the lowest point in the system will result in vapor lock.

Fuel Aging Effects

The RVP and distillation were measured prior to each run and a sample was tested after the run to measure any changes in the RVP. If the change in RVP was large enough, the posttest sample's distillation curve was determined. On the average, the RVP dropped about 1.6 psi during the course of a run, and typically the IBP changed only 1 or 2° C.

The initial tank temperature had an effect on the magnitude of the drop in RVP. As can be seen in table 6, the drop in RVP increases with the initial tank temperature. There were only 15 data points in the 25° C temperature range, so there is a limited confidence in this value.

TABLE 6. EFFECT OF INITIAL TANK TEMPERATURE ON THE DROP IN RVP

INITIAL TEMPERATURE RANGE DEGREES CELSIUS	DELTA RVP PSI
18 to 21	-0.36
24 to 27	-1.20
29 to 32	-1.07
30 to 38	-1.77
41 to 43	-1.97
46 to 49	-2.38

AVERAGE RVP = -1.6 PSI FOR ALL RUNS

In general, these results agree well with those covered in references 4, 5, and 6. The principal exceptions to these results were for sample SBL, the last test sequence using TPU, and the samples which were allowed to age in a vented tank overnight.

Sample SBL was prepared for the Technical Center approximately 2 years prior to being tested. Even though this fuel was stored in a sealed drum, the RVP decayed from the initial value of 15 psi to 13.6 psi at the time of the first vapor lock test. This decay continued for the subsequent runs until it reached a value of 11.7 psi. The average drop from the pretest to the posttest RVP for this fuel was 3.6 psi, with the largest drop being 5.1 psi. The data from the last test sequence using sample TPU is contained in table 7. In this case, the fuel sat in a partially full barrel for over 2 months prior to being tested. The original test sequence was to look into the effect of tank fill level and engine cooling

air temperature on the incidence of vapor lock in a suction feed system. As the test progressed, the temperature at which vapor lock occurred increased which was contrary to what was expected, since the tank level was dropping as fuel was used. When it was apparent that vapor lock could not be induced at 12.5 gph, the run was terminated. Only after the large drop in RVP was noted did the age of the fuel come into question. The data from these two cases indicate that once the RVP begins to decay the drop is rapid and decay in RVP can occur even though the fuel is stored in sealed drums.

TABLE 7. EFFECTS OF FUEL AGING ON VAPOR LOCK IN SUCTION FEED SYSTEM

Fuel Sample Age: 8 Weeks
Initial Tank Temperature: 43 degrees Celsius (110 degrees Fahrenheit)
Fuel ID: TPU, IBP 25 degrees Celsius, RVP 11.3 psi
Posttest RVP: 7.8; Delta RVP = 3.5 psi

FUEL FLOW (gph)	TIME AT 110°F (min)	LINE HEATER SETTING	LINE TEMP (oC)	SED. BOWL TEMP (oC)	CARB. BOWL TEMP (oC)
10.0	20	150	55	53	55
10.0	65	150	57	55	52
10.0	81	250	58	55	55
12.5	30	150	54	52	52
12.5	55	150	58	55	52
12.5	93	250	58	56	54
12.5	135	250	UNABLE TO VAPOR LOCK		
13.5	35	OFF	54	52	52
13.5	43	150	54	52	51
13.5	105	250	57	57	56
13.5	120	250	57	58	58

Conversely, the fuel can age without significantly altering the RVP, yet the behavior of the fuel is affected. This was particularly evident when fresh fuel was allowed to sit overnight at ambient temperatures in a vented container. Table 8 shows what changes in behavior occur as the fuel is allowed to age overnight, even though the initial RVP of the overnight sample has dropped only 0.2 psi (well within the accuracy of the test), the temperatures at which vapor lock occurs has risen significantly. Just as important, the fresh sample required little or no additional heat for vapor lock to occur (note the line heater settings) whereas the overnight sample required additional heat at all fuel flows and typically the line heater setting was higher. The results from these tests indicate that fresh fuel, which is stored in sealed drums, provides the worst case for vapor lock testing.

TABLE 8. EFFECT OF OVERNIGHT AGING ON VAPOR LOCK BEHAVIOR

ASTM VOLATILITY CLASS	INIT TEMP degC	FUEL FLOW gph	LINE TEMP degC	SED TEMP degC	CARB TEMP degC	LINE HEATER SETTING	NOTES	RVP psi	POSTTEST RVP
E	49	2.5	55	47	42	150	OVERNIGHT	12.2	8.0
E	49	5.0	56	56	51	250	OVERNIGHT	12.2	8.0
E	49	7.5	54	62	57	250	OVERNIGHT	12.2	8.0
E	49	10.0	57	58	53	250	OVERNIGHT	12.2	8.0
E	49	12.5	54	58	52	250	OVERNIGHT	12.2	8.0
E	49	13.5	58	59	50	250	OVERNIGHT	12.2	8.0
E	49	2.5	NO	VAPOR	LOCK	250	OVERNIGHT	12.2	8.0
E	49	2.5	53	53	45	150	FRESH	12.4	8.6
E	49	5.0	49	52	50	150	FRESH	12.4	8.6
E	49	7.5	55	54	51	150	FRESH	12.4	8.6
E	49	10.0	55	55	52	OFF	FRESH	12.4	8.6
E	49	12.5	55	54	49	OFF	FRESH	12.4	8.6
E	49	13.5	49	54	47	OFF	FRESH	12.4	8.6
E	49	2.5	52	54	50	150	FRESH	12.4	8.6

Engine Cooling Air and Fill Level Effects

The effects of cooling air temperature and tank fill level were investigated more thoroughly using the C-172 fuel system. Early in the program, the boiler in the engine cooling air unit failed and the test was conducted using an engine cooling air temperature of 29° C (85° F). A repeat of that test with 38° C (100° F) cooling air temperature did not result in any significant differences. A more structured test was conducted in which the autogas tank was filled to capacity and the 10.0, 12.5, and 13.5 gph fuel flow settings were repeated for various combinations of tank level and engine cooling air temperature. The data in table 9 are listed in the same order as conducted, so the tank level decreases from top to bottom. As can be seen, there is not a significant difference in the vapor lock temperature (especially the sediment bowl where vapor lock normally is expected to occur) as time increases and tank level decreases. What does change is the setting required to induce vapor lock as the engine cooling air temperature is varied. The hotter the engine cooling air temperature, the less supplemental heat is needed to induce vapor lock. With 38 degrees Celsius cooling air, supplemental heat must be added at only the 10 gph fuel flow setting. With a cooling air temperature of 17 to 18° C, supplemental heat (line heater setting of 150) must be added for all three fuel flows.

TABLE 9. EFFECTS OF COOLING AIR TEMPERATURE AND TANK FILL LEVEL ON VAPOR LOCK TEMPERATURE

The initial RVP was 11.3 psi.

TANK TEMP degC	COOLING AIR TEMP degC	FUEL FLOW gph	LINE TEMP degC	SED TEMP degC	CARB TEMP degC	LINE HEATER SETTING
43	17	10.0	54	50	44	150
43	17	12.5	52	50	43	150
43	17	13.5	48	49	43	150
43	38	10.0	51	50	47	150
43	38	12.5	44	49	45	110
43	38	13.5	46	49	46	110
43	27	10.0	53	50	47	150
43	27	12.5	47	50	45	150
43	27	13.5	45	49	45	110
43	18	10.0	54	51	46	150
43	18	12.5	51	50	43	150
43	18	13.5	48	49	45	150
43	38	10.0	50	51	47	150
43	38	12.5	45	49	45	110
43	38	13.5	44	49	46	110
43	27	10.0	54	52	48	150
43	27	12.5	48	51	45	150
43	27	13.5	44	49	45	150

Heating Techniques/Initial Tank Temperature

The Technical Center also looked into what effect, if any, the heating technique had on the incidence of vapor lock. Normally, the tank was heated using the heat exchangers incorporated in the tank. Several runs were conducted whereby the fuel was heated by heating the lines and allowing the fuel in the lines to percolate back into the tank. A few runs were made where the tank was heated using forced hot air from an aircraft preheater. Table 10 presents the data from two runs. In the first case, the fuel was heated with the in-tank heat exchanger, and in the second case, the fuel was heated using the aircraft preheater. The results, which show no significant effects both in terms of what temperature vapor lock occurred at or what setting the line heaters needed to be set at to induce vapor lock, are typical of this series of tests. Regardless of the heating technique used, the fuel would vapor lock under the same conditions.

TABLE 10. COMPARISON OF TWO HEATING TECHNIQUES ON VAPOR LOCK TEMPERATURE

FUEL FLOW gph	LINE TEMP degC	SED TEMP degC	CARB TEMP degC	LINE HEATER SETTING	NOTES	RVP psi
2.5	---NO	VAPOR	LOCK---	250	Heat Exchanger	11.3
5.0	---NO	VAPOR	LOCK---	250	Heat Exchanger	11.3
7.5	41	51	49	250	Heat Exchanger	11.3
10.0	48	50	48	150	Heat Exchanger	11.3
12.5	44	48	46	150	Heat Exchanger	11.3
13.5	42	47	45	100	Heat Exchanger	11.3
2.5	---NO	VAPOR	LOCK---	250	A/C Heater	11.3
5.0	---NO	VAPOR	LOCK---	250	A/C Heater	11.3
7.5	43	51	51	250	A/C Heater	11.3
10.0	48	51	47	150	A/C Heater	11.3
12.5	42	48	45	150	A/C Heater	11.3
13.5	42	48	46	100	A/C Heater	11.3

As part of this investigation into heating technique, the Technical Center reviewed all of the data and found that typically it would take an hour to one and a half hours to heat the fuel in the tank to 43° C and at most it took three hours between the beginning of the heating procedure and the beginning of the test. The shortest time required to heat the fuel to 43° C was 20 minutes (using the forced hot air technique). No significant time effects are apparent within this time frame (20 to 180 minutes).

A review of the data from the wings used in the fuel aging survey shows the C-172 construction is the worst case for heat transfer (i.e., the least amount of heat addition). A test was conducted on a C-172 wing under the following conditions.

1. Ambient air from 29 to 31 degrees Celsius.

2. Winds southwest at 7 knots.

3. Scattered clouds, visibility 2 to 3 miles in haze.

4. Full tanks.

5. Forced hot air from a Herman Nelson heater, 93 degrees Celsius (200 degrees Fahrenheit).

6. Air blowing on the bottom of the wing only; all inspection plates closed.

7. The wing root and tip open to ambient air (to carry away heat).

All of these conditions, except ambient temperature, represented a worst case as far as heating the fuel is concerned. The results are shown in figure 8. At Point A, fuel is added to the tank, and the heater is turned on at Point B. It took 2 hours and 20 minutes to heat the fuel to 43° C. At Point C, the heater output was increased to 120° C (approximately 250 degrees Fahrenheit) and the heat transfer rate was increased by about 50 percent. This implies it would have taken between 90 and 100 minutes to reach 43° C with just this one change.

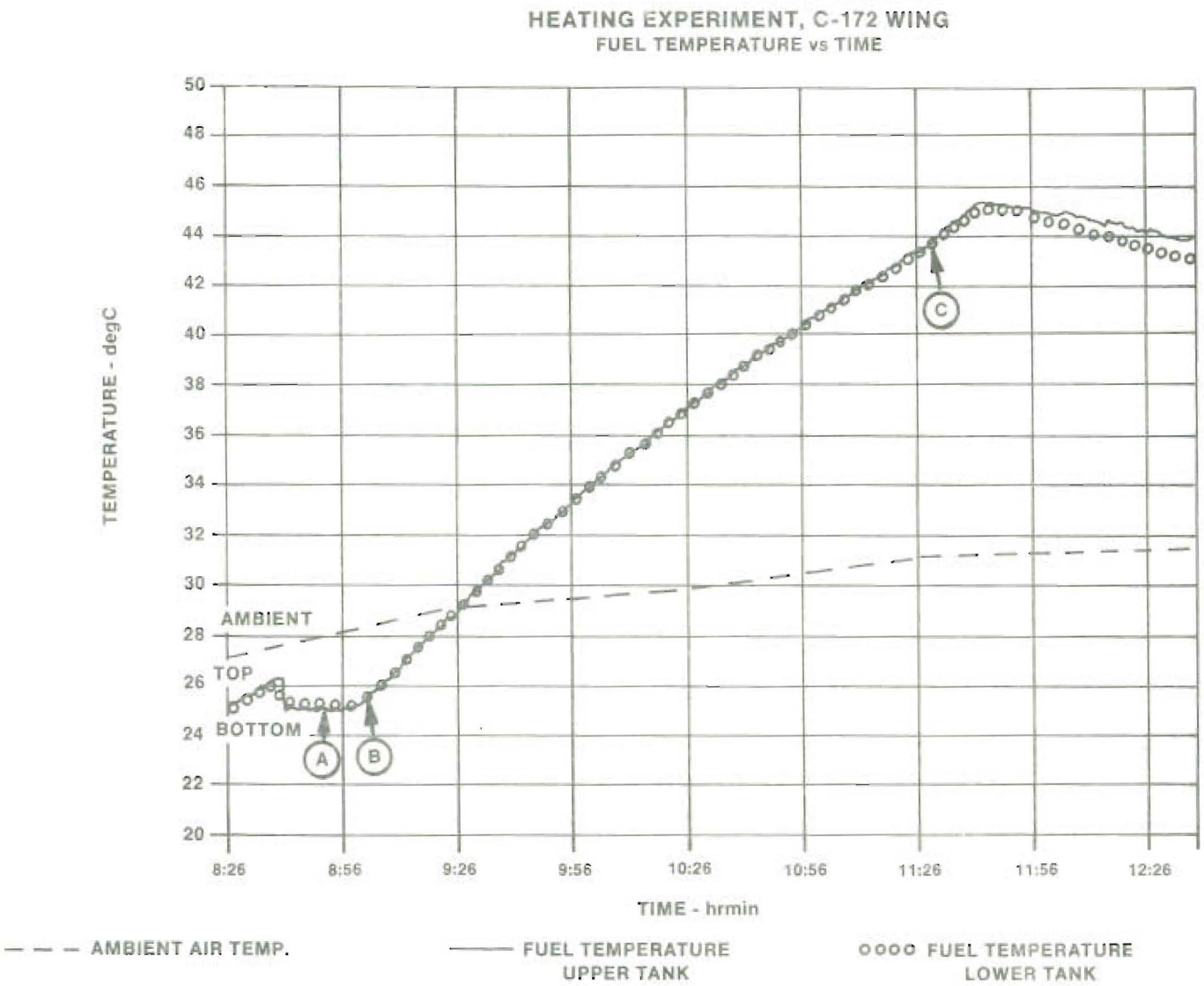

FIGURE 8. HEATING EXPERIMENT USING A C-172 FUEL SYSTEM

The vapor lock temperature as a function of tank temperature is presented in figure 9 and table 11. The last column of table 12 is the average value of the sediment bowl temperature minus the tank temperature. As can be seen, the average temperature for the onset of vapor lock rises with the initial tank temperature. What is more significant is that the difference between the temperature of the fuel in the tank and the temperature at which vapor lock occurs decreases with the higher initial tank temperatures. This is particularly true of the sediment bowl temperature where the Technical Center feels vapor lock is actually occurring.

Based on observations during the test sequence and the need for supplemental heat (see appendix D, reference 2), the 43 degrees Celsius fuel temperature is the worst case for vapor lock. This observation is supported in part by the average difference between the tank temperature and the sediment bowl temperature when vapor lock occurs. The temperature difference decreases markedly until the 43° C (110° F) fuel temperature is reached, then it stabilizes. Once the 43° C initial tank temperature is exceeded, it becomes more difficult to induce vapor lock, partially because of the reduced temperature difference between the fuel flowing through the system and the lower cowling air temperature, thus making heat transfer more difficult, and partly because of the loss of some of the more volatile components as reflected in the RVP (table 7). One observation of note is, the tanks would normally begin to vent vigorously when heating the fuel above 43° C. Normally this occurred from 43 to 44.5° (110 to 112° F). Sample SRU began to vent at 42° C, but it was somewhat of a special case that will be covered under the temperature versus RVP analysis.

The above demonstrates that any technique used to heat the fuel to 110° F provides the worst case for vapor lock testing and a time limit of three hours from the start of the heating sequence to the start of the flight test is reasonable.

TABLE 11. VAPOR LOCK TEMPERATURE AS A FUNCTION OF INITIAL TANK TEMPERATURE

INIT TANK TEMP degC	AVG LINE TEMP degC	AVG SED BOWL TEMP degC	AVG CARB BOWL TEMP degC	AVG SED-INIT TANK TEMP degC
18 to 21	35.50	44.41	42.50	23.79
24 to 27	35.45	43.55	42.82	17.89
29 to 32	42.02	47.36	45.38	15.40
35 to 38	44.46	49.31	47.19	12.39
41 to 43	48.98	49.68	46.19	6.59
46 to 49	54.44	54.26	49.44	5.66

Analysis Criteria:

All Classes, C-172 Fuel System, All Initial Tank Temperatures, Fresh and Overnight Fuel Samples

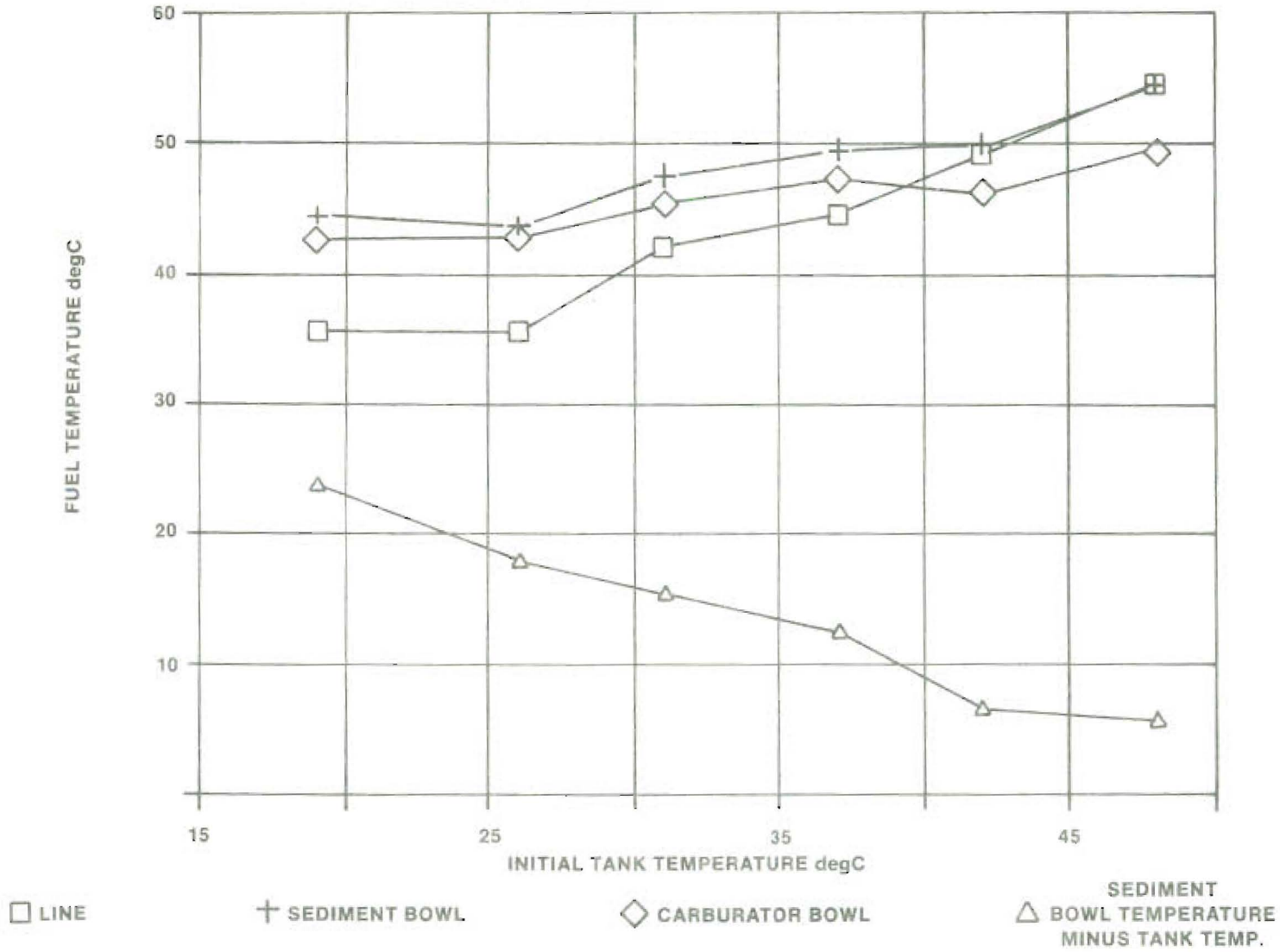

FIGURE 9. AVERAGE VAPOR LOCK TEMPERATURE VERSUS SYSTEM INITIAL TANK TEMPERATURE

Fuel Flow and Fuel System Effects

Table 12 lists the average vapor lock temperature as a function of fuel flow. The temperature at which vapor lock occurs declines with increasing fuel flow. This is probably a consequence of the increase in turbulence as the fuel flow increases which in turn increases the amount of vapor formed. This phenomena is dramatically demonstrated when one spills some autogas on the ground. Immediately following the spill, a significant amount of foaming is observed. The lower vapor lock temperatures associated with the higher fuel flows imply vapor lock is easier to induce at the higher fuel flows. This is what the Technical Center has experienced; vapor lock at the higher fuel flows typically occurred without supplemental heat, and it often occurred almost immediately after the engine ran long enough to purge the cooler avgas from the fuel system.

TABLE 12. VAPOR LOCK TEMPERATURE AS A FUNCTION OF FUEL FLOW

FUEL FLOW gph	AVG LINE TEMP degC	AVG SED BOWL TEMP degC	AVG CARB BOWL TEMP degC
2.5	47.95	50.65	45.18
5.0	47.29	50.18	48.64
7.5	45.42	49.32	48.68
10.0	44.87	48.92	47.17
12.5	43.85	47.35	44.13
13.5	43.06	46.92	43.57

Analysis Criteria:
All High Wing Data, Standard Configuration

All of the above was performed on the C-172 fuel system with only the modifications necessary to provide for instrumentation needs. The occurrence of percolation in the fuel system implied there might be a fuel system design effect on vapor lock. Specifically, would the use of only a single feed line result in vapor lock at lower fuel flows than the standard configuration with two lines since there would be no path for the hot fuel/vapor to return to the tank? A series of runs were conducted with either the front or back fuel line capped in order to demonstrate what effect, if any, these changes in the fuel system would have.

Table 13 lists the vapor lock temperatures and the line settings of three types of comparable runs. The first two runs listed are for the standard C-172 fuel system with an initial tank temperature of 32 and 43° C. The second set of runs had the front line from the fuel system capped so that the fuel fed from the rear line only, and the final run in this sequence had the rear line capped. In general, vapor lock was easier to induce with either line capped than with the standard configuration, which was expected, since there is more turbulence with one of the lines capped. There were no other significant differences, however.

TABLE 13. FUEL SYSTEM CONFIGURATION EFFECTS; GRAVITY FEED SYSTEM

INITIAL TANK TEMP degC	FUEL FLOW gph	LINE TEMP degC	SED BOWL TEMP degC	CARB BOWL TEMP degC	LINE HEATER SETTING	NOTES*	INITIAL RVP psi
32	2.5	--NO	VAPOR	LOCK--	250	Standard	11.3
32	5.0	--NO	VAPOR	LOCK--	250	Standard	11.3
32	7.5	44	51	51	250	Standard	11.3
32	10.0	38	48	48	150	Standard	11.3
32	12.5	47	49	45	150	Standard	11.3
32	13.5	46	47	45	150	Standard	11.3
43	2.5	--NO	VAPOR	LOCK--	250	Standard	11.3
43	5.0	--NO	VAPOR	LOCK--	250	Standard	11.3
43	7.5	46	52	52	250	Standard	11.3
43	10.0	49	52	49	150	Standard	11.3
43	12.5	46	51	45	OFF	Standard	11.3
43	13.5	46	50	46	OFF	Standard	11.3
32	2.5	54	47	42	150	FT CAPD*	11.3
32	5.0	54	54	52	150	FT CAPD	11.3
32	7.5	51	53	53	150	FT CAPD	11.3
32	10.0	47	51	47	150	FT CAPD	11.3
32	12.5	44	48	44	150	FT CAPD	11.3
32	13.5	42	47	46	150	FT CAPD	11.3
43	2.5	52	45	42	150	FT CAPD	11.3
43	5.0	58	54	50	150	FT CAPD	11.3
43	7.5	53	53	52	150	FT CAPD	11.3
43	10.0	46	50	46	150	FT CAPD	11.3
43	12.5	45	50	45	OFF	FT CAPD	11.3
43	13.5	45	49	46	OFF	FT CAPD	11.3
43	2.5	--NO	VAPOR	LOCK--	250	BK CAPD*	11.3
43	5.0	--NO	VAPOR	LOCK--	250	BK CAPD	11.3
43	7.5	48	53	53	150	BK CAPD	11.3
43	10.0	46	52	49	150	BK CAPD	11.3
43	12.5	45	51	45	OFF	BK CAPD	11.3
43	13.5	46	51	46	OFF	BK CAPD	11.3

*FT CAPD = Front Line Capped; BK CAPD = Rear Line Capped

The takeoff power setting was still the worst case as was an initial tank temperature of 43° C (110° F). As before, the ease of vapor lock is reflected in the generally lower temperature at the takeoff (13.5 gph) power setting and the use of lower line heater settings.

A short sequence was conducted to demonstrate that the 43° C initial tank temperature and the takeoff fuel flow were the worst case for a generic suction feed (low wing) fuel system. The data from these runs are presented in table 14.

TABLE 14. FUEL SYSTEM CONFIGURATION EFFECTS; SUCTION FEED SYSTEM

INITIAL TANK TEMP degC	FUEL FLOW gph	LINE TEMP degC	SED BOWL TEMP degC	CARB BOWL TEMP degC	LINE HEATER SETTING	NOTES	INITIAL RVP psi
32	2.5	70	78	52	250	Low Wing	11.3
32	5.0	52	55	52	250	Low Wing	11.3
32	7.5	53	55	53	250	Low Wing	11.3
32	10.0	45	49	52	250	Low Wing	11.3
32	12.5	45	50	52	250	Low Wing	11.3
32	13.5	48	51	52	150	Low Wing	11.3
38	2.5	--NO	VAPOR	LOCK--	250	Low Wing	11.3
38	5.0	58	56	53	250	Low Wing	11.3
38	7.5	54	54	54	250	Low Wing	11.3
38	10.0	52	54	54	250	Low Wing	11.3
38	12.5	50	53	52	250	Low Wing	11.3
38	13.5	48	51	52	150	Low Wing	11.3
43	2.5	--NO	VAPOR	LOCK--	250	Low Wing	11.3
43	5.0	67	72	60	250	Low Wing	11.3
43	7.5	64	61	57	250	Low Wing	11.3
43	10.0	60	58	57	150	Low Wing	11.3
43	12.5	57	55	54	150	Low Wing	11.3
43	13.5	55	53	53	110	Low Wing	11.3

As before, both of these conditions proved to be the worst case. There are some differences; however, the most noteworthy is the elevated temperatures at which vapor lock occurs for the lower fuel flow rates. With the additional working the fuel receives and the additional exposure to heat, especially in the engine drive fuel pump, the fuel gets hotter faster. Normally, this would result in vapor lock sooner but with the excess capacity of the fuel pump, as compared to demand, at the lower power settings, fuel starvation is delayed until higher temperatures are reached.

The Technical Center encountered a phenomena which may have an important consequence. When using the line heaters to induce vapor lock in the suction feed system, "carburetor foaming" was observed prior to the onset of vapor lock. As the temperature in the carburetor bowl climbs, the liquid in the bowl boils resulting in a foam which will not support the float. As the float drops, the engine driven pump supplies excess fuel to the carburetor bowl which is then drawn into the intake manifold. In addition, vapor which is vented from the carburetor bowl is ingested into the intake manifold (see figure 10). This phenomena results in such a rich fuel-to-air ratio that the power developed is substantially reduced (as much as 50 percent). A temperature increase of only a few degrees will result in the onset of vapor lock which at first seems to improve engine performance because of the shift to a leaner fuel to air ratio.

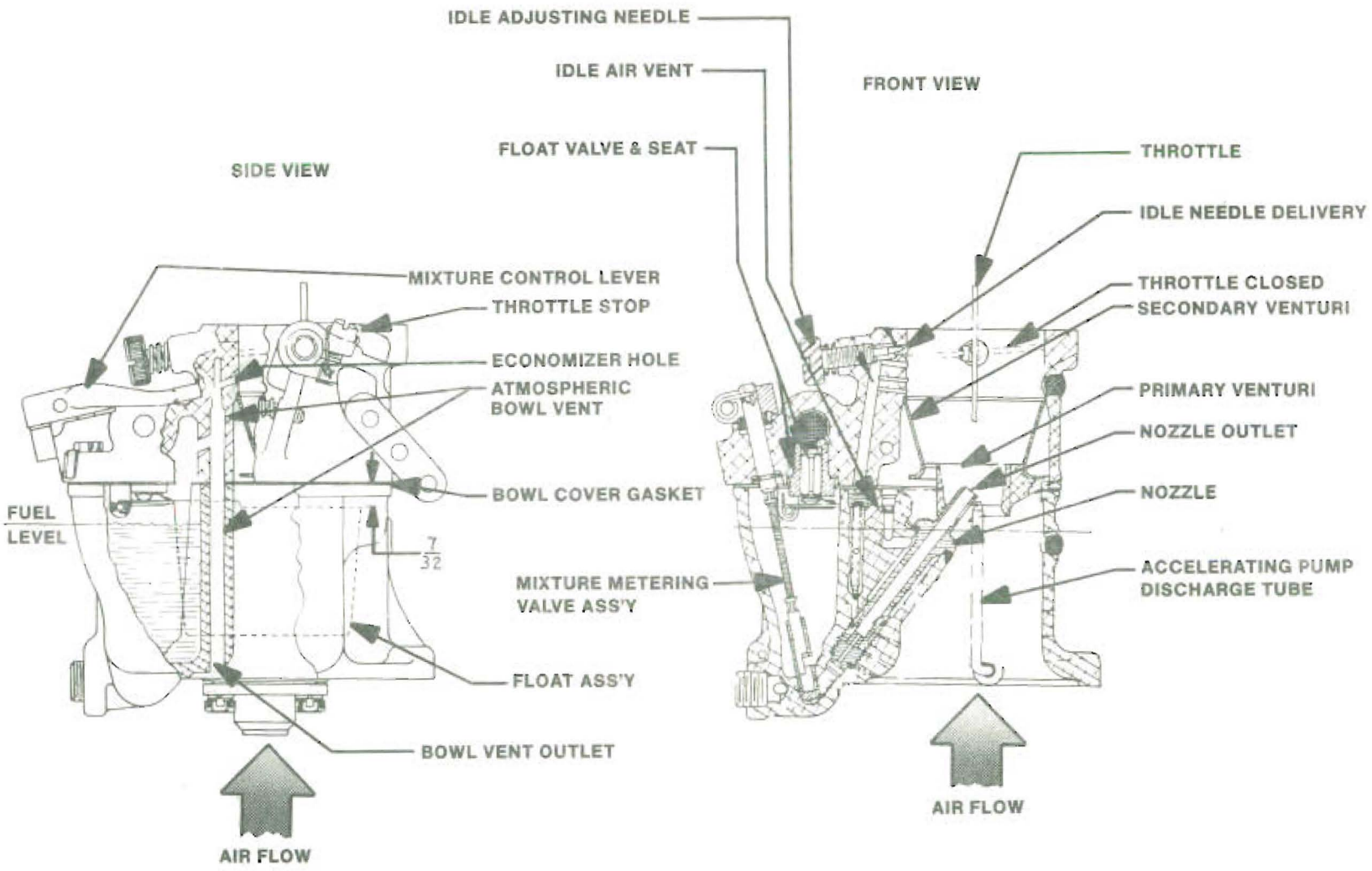

FIGURE 10. CROSS SECTION VIEWS OF MARVEL-SCHEBLER CARBURETOR USED IN THE DYNAMOMETER INSTALLATION

Normally, this foaming phenomena would not be a problem since line heaters are not found on general aviation aircraft, but there is an operating condition which can result in a similar condition. This is an engine start after a hot soak. The Experimental Aircraft Association reports that certain model years of the Piper Cherokee are apparently affected by carburetor foaming following a hot engine start when using autogas (reference 7). This problem appears to be associated with changes to the engine cooling design which were incorporated to reduce engine cooling drag. These design changes do not affect the performance of the aircraft when operating on avgas, however.

In addition to looking into the differences between gravity feed and suction feed systems, the performance of a fuel injected engine was compared with a carbureted engine. The O-320 on the dynamometer was converted to a fuel injected engine by removing the carburetor, intake manifold, and engine oil sump and replacing these items with the appropriate intake manifold, oil sump, and fuel injection system for this engine. An engine driven pump was added as was an electrically operated boost pump. The C-172 fuel system was left intact upstream of the boost pump. During a test sequence, the boost pump was left off except for recovery from vapor lock. More often than not, the electric boost pump was required to recover from a vapor lock sequence with the fuel injected engine. Apparently, the engine driven pump would become vapor bound, and the pressure available from the C-172 fuel system was insufficient to displace this vapor.

Takeoff power and 43° C initial tank temperatures were the worst case for vapor lock testing during these runs. When the results were compared with the identical conditions for a carbureted engine, it was noted that vapor lock occurred sooner with the fuel injected engine. This may be a consequence of the fuel system design. It appeared as though the system would shut off suddenly at the lower fuel flow rates whenever the system pressure dropped below 3.5 psi. At the higher fuel flows, the loss of power was more gradual, indicating the pump could not supply sufficient fuel to the injection system.

Effect of RVP on Vapor Lock

The Technical Center tested autogas whose RVP ranged from 9.3 to 14.1 psi. Initially, an attempt was made to correlate the vapor lock temperatures with the ASTM volatility class, table 15. The first analysis was based on the volatility class as determined from the purchase date. Upon reviewing the results, it was noted that class D (spring/fall) had lower vapor lock temperatures than class E (winter) which was unexpected. It was noted that the RVP of two of the class D fuels was higher than the ASTM specifications, and their RVP's were in the range specified for class E fuels. When these two fuels were reclassified as class E fuels, the results were as expected with the vapor lock temperature decreasing with increasing RVP.

TABLE 15. AVERAGE VAPOR LOCK TEMPERATURE BY ASTM VOLATILITY CLASS

Class Determined by Purchase Date

	AVERAGE LINE TEMP degC	AVERAGE SED TEMP degC	AVERAGE CARB TEMP degC
Class C	50.74	51.64	48.52
Class D	40.60	47.16	45.24
Class E	43.05	47.41	44.61

Class Determined by RVP

	AVERAGE LINE TEMP degC	AVERAGE SED TEMP degC	AVERAGE CARB TEMP degC
Class C	50.74	51.64	48.52
Class D	45.43	51.50	48.04
Class E	42.04	46.77	44.32

Analysis Criteria:
High Wing, All Fuel Flows, All Fresh Fuel

A more detailed analysis was conducted whereby the RVP was grouped into 5 ranges (see figure 11). The data shows a consistent decline with exception of the fuels in the 10.1 to 11 psi range. Sample SRU whose RVP was 10.5 psi fell into this range.

Sample SRU was by far the worst case for vapor lock despite the fact it was a class C fuel with an RVP of 10.5 psi. In addition to being the worst fuel in terms of vapor lock it was also the worst fuel for venting when heating a sample for a test. In the case of the 49° C (120° F) initial tank temperature, the level in the tank fell from 3 inches of fuel to less than 2 inches. If thermal expansion is taken into consideration, over one third of the initial volume of fuel was lost during the heating process alone. The behavior of sample SRU is probably related to how it is marketed. It is the second lowest octane fuel available from a pump which dispenses several different octane fuels by blending two different constituents which are held in storage. Its performance number was 87, the lowest allowed by the various STCs which is how it was selected in place of the lowest available octane fuel from the company. The Technical Center feels that the RVP is not particularly affected by loading a fuel up with one particular hydrocarbon, since the RVP is the sum of all the partial pressures of the individual components. If one component is represented by more than a minimum amount, it contributes little extra to the RVP but does affect the physical behavior of the fuel.

Since SRU was by far the worst case for vapor lock despite its relatively low RVP, a second analysis was conducted whereby this sample was removed from the data base. Figure 12 shows the results from this analysis. In this analysis,

ANALYSIS CONDITIONS: HIGH WING, ALL FRESH FUELS, ALL FUEL FLOW, ALL INIT TANK TEMPS

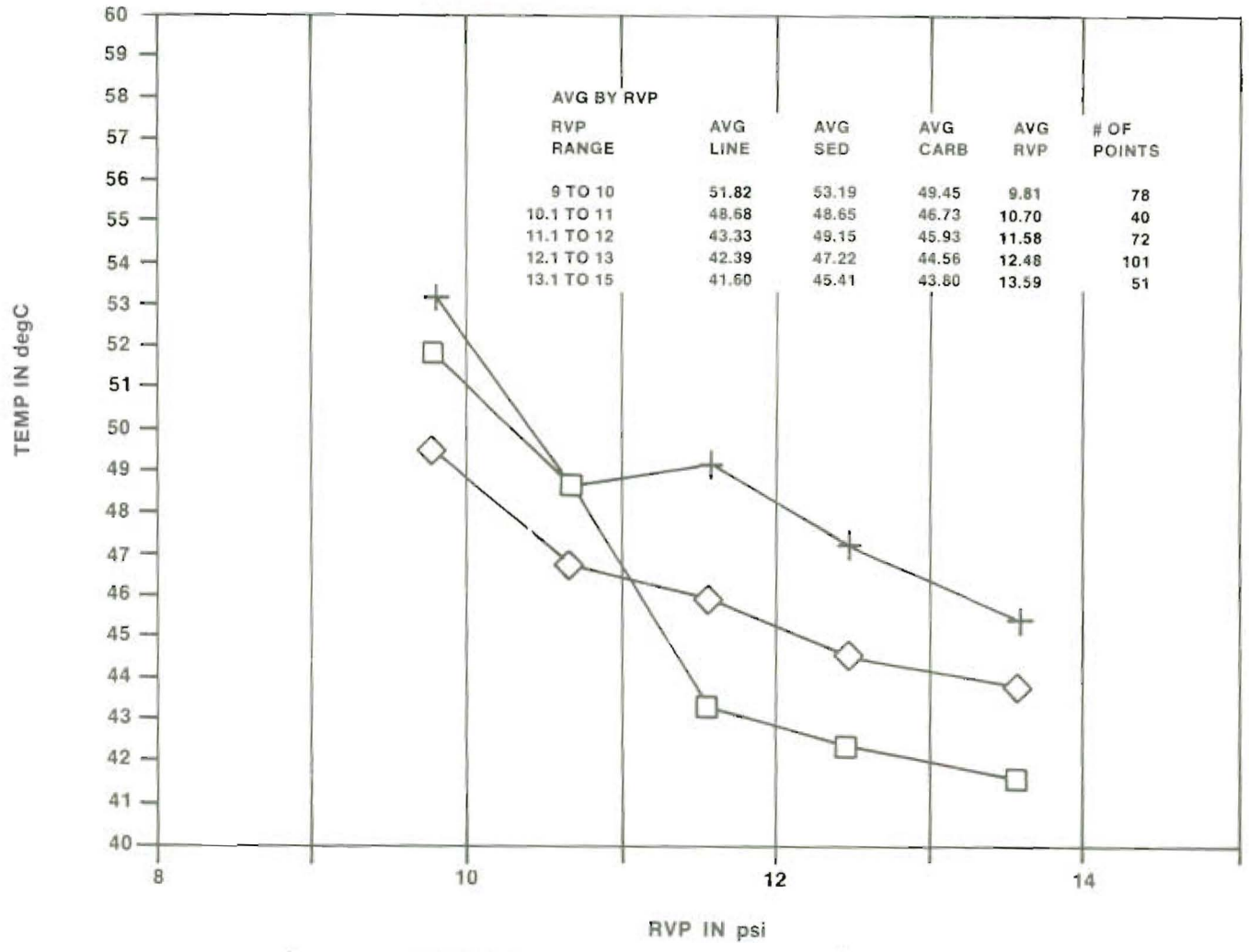

AVG BY RVP

RVP RANGE	AVG LINE	AVG SED	AVG CARB	AVG RVP	# OF POINTS
9 TO 10	51.82	53.19	49.45	9.81	78
10.1 TO 11	48.68	48.65	46.73	10.70	40
11.1 TO 12	43.33	49.15	45.93	11.58	72
12.1 TO 13	42.39	47.22	44.56	12.48	101
13.1 TO 15	41.60	45.41	43.80	13.59	51

□ LINE TEMP + SED BOWL TEMP ◇ CARB BOWL

FIGURE 11. AVERAGE VAPOR LINE TEMPERATURE BY RVP

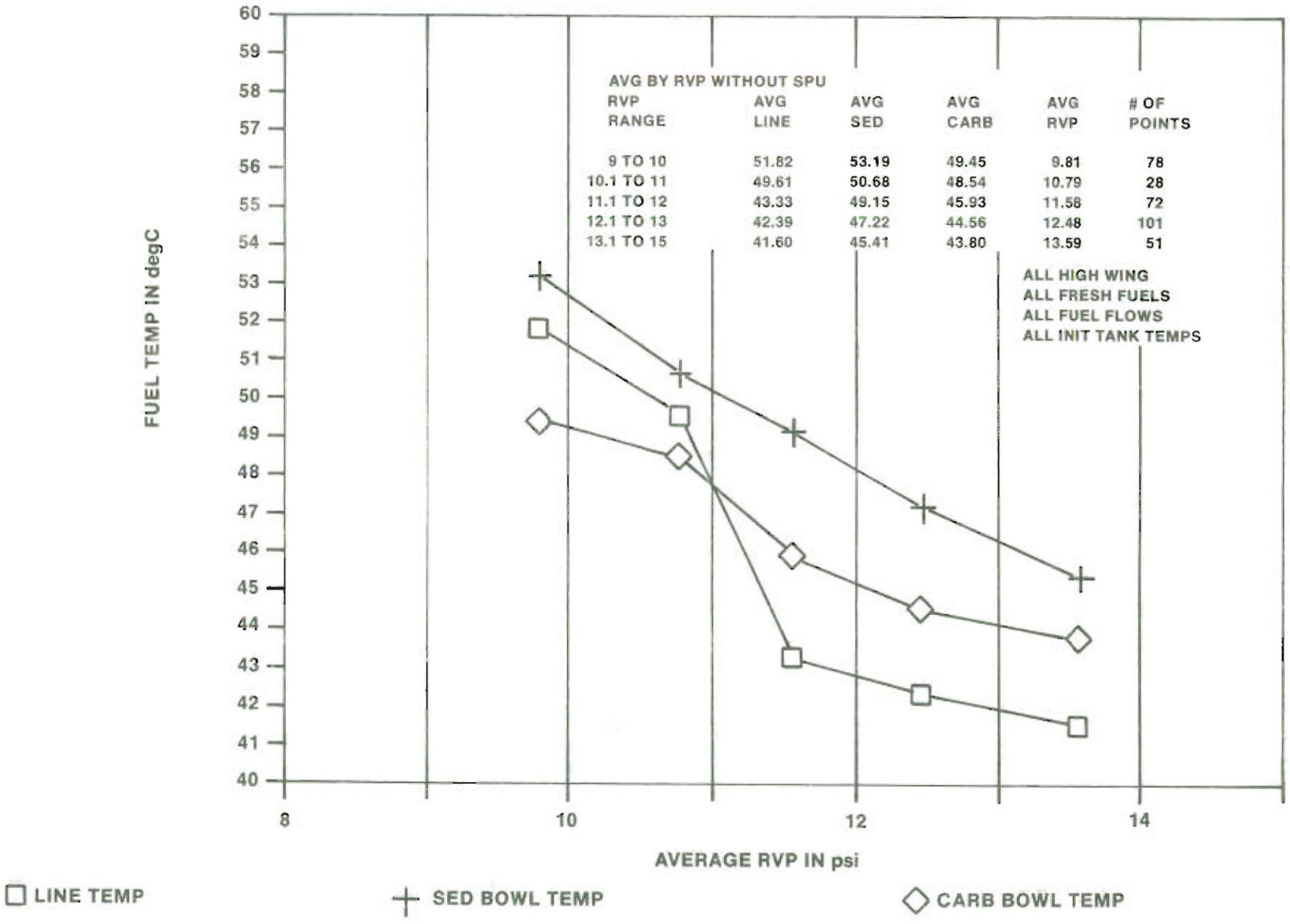

FIGURE 12. AVERAGE VAPOR LOCK TEMPERATURE BY RVP WITHOUT SAMPLE SRU IN DATABASE

there is a strong linear relationship between the average sediment bowl temperature at the time of vapor lock and the RVP of the fuel (the correlation coefficient equals 0.94). The step associated with the line temperature at approximately 11 psi reflects the need to use the line heaters to a greater extent when testing with the class C fuels.

As a cross check on this analysis, the sediment bowl temperature at vapor lock for two aged fuels were averaged and the average compared with the predicted value based on the RVP. In the first case, the average sediment bowl temperature was 52.3° C for a fuel whose initial RVP was 9 psi. The predicted value from the linear regression of the data in figure 12 was 54.6° C. For the second case, the average temperature, the RVP, and the predicted values were 50.9 degrees Celsius, 11 psi, and 50.5° C, respectively. A linear regression of the raw data produced similar results (see figure 13). In this case, the predicted values for the 9 and 11 psi fuels were 55.0° C and 50.4° C, respectively. It should be noted that some of the scatter observed in figure 13 is a consequence of changes in the fuel flow rate in addition to changes in the RVP.

As can be seen, there is a general trend toward lower vapor lock temperatures as the RVP increases, but this trend can be affected by the individual refining techniques. The average temperatures for the SRU sample were more indicative of a fuel whose RVP was 12.6 to 13 psi, depending on which linear regression is used. This implies that the use of an ASTM volatility class E fuel (RVP equals 13.5 psi or higher) will provide the worst case for vapor lock testing.

Miscellaneous Observations

During the vapor lock runs, the fuel flow and fuel pressure would become erratic as the sediment bowl temperature exceeded the IBP for the fuel being tested. Figure 14 shows how the fuel pressure and flow rate indication become unstable as the sediment bowl temperature exceeded 26°, the IBP for this particular sample. The pressure spikes are a consequence of the percolation that was discussed earlier. Note that as vapor lock occurred, the line temperature climbed rapidly, and the fuel flow and pressure dropped to near zero. In this case, the engine ran for approximately one minute before it lost power. Under these conditions, the EGT provided a good indication that vapor lock had occurred at the higher fuel flows where power interruption rapidly followed the onset of vapor lock. The EGT system had too slow a response to provide useful information.

A normal vapor lock sequence ended with power interruption. On occasion, the vapor in the fuel lines would restrict the flow sufficiently to result in rough engine operation but not enough to cause the engine to quit. This condition would continue indefinitely. If this condition occurred, manipulating the throttle typically had little or no effect on engine operation as long as the movements were gradual. Rapid advancement of the throttle would kill the engine, whereas, retarding the throttle would improve the roughness but not the power developed.

To see if the technique of switching tanks after setting the fuel flow on avgas had an effect on the results, the engine controls were gradually increased with the intention of reaching the 10 gph power settings which had previously resulted in the rough running condition discussed above. As the demand increased, power was interrupted by vapor lock at what corresponds to a 9.3 gph setting. This implies that the rough operation noted above in an unstable condition and any outside influence, such as turbulence, could trigger a loss of power if one is operating under adverse conditions.

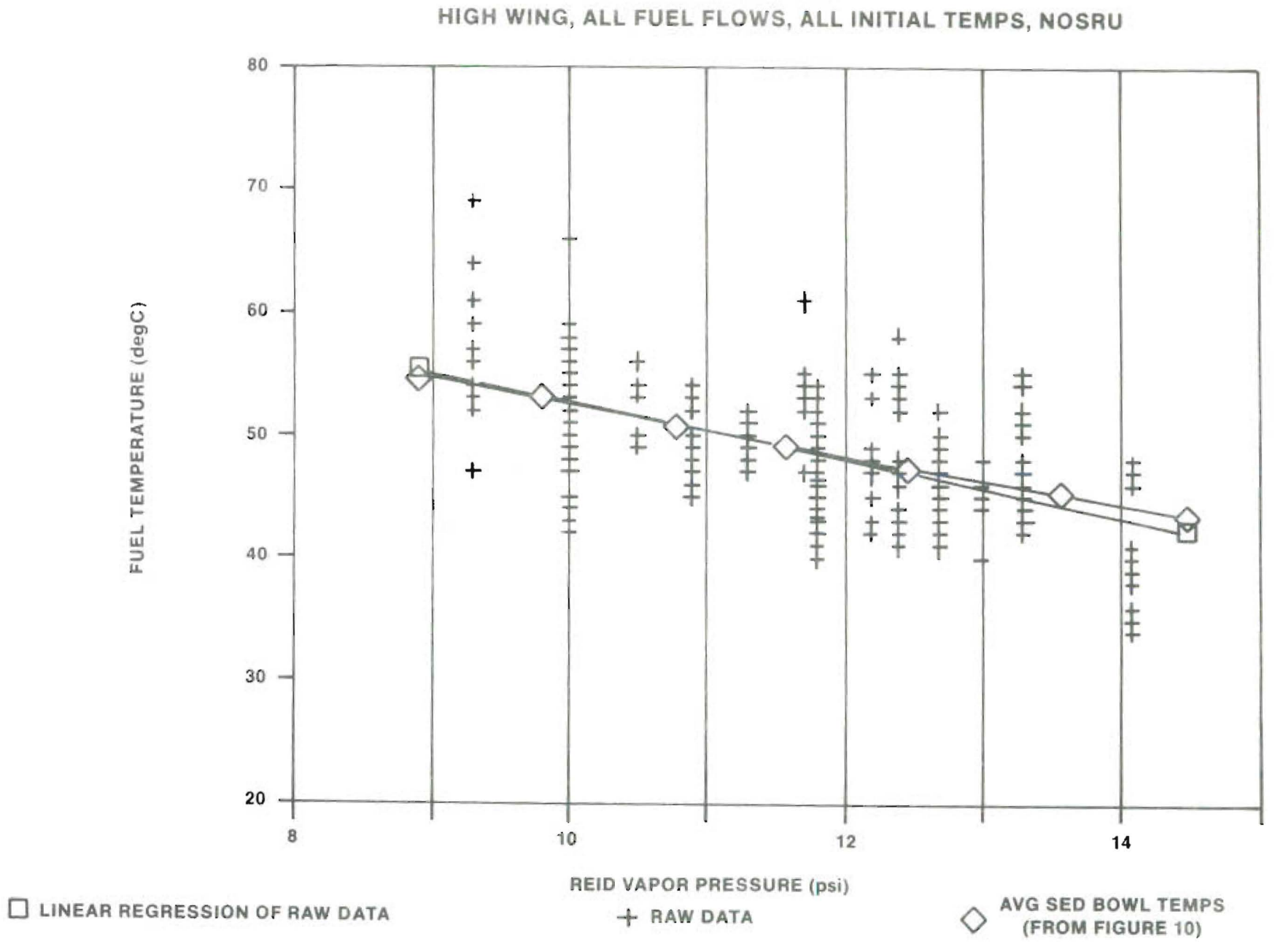

FIGURE 13. SEDIMENT BOWL TEMPERATURE VERSUS RVP

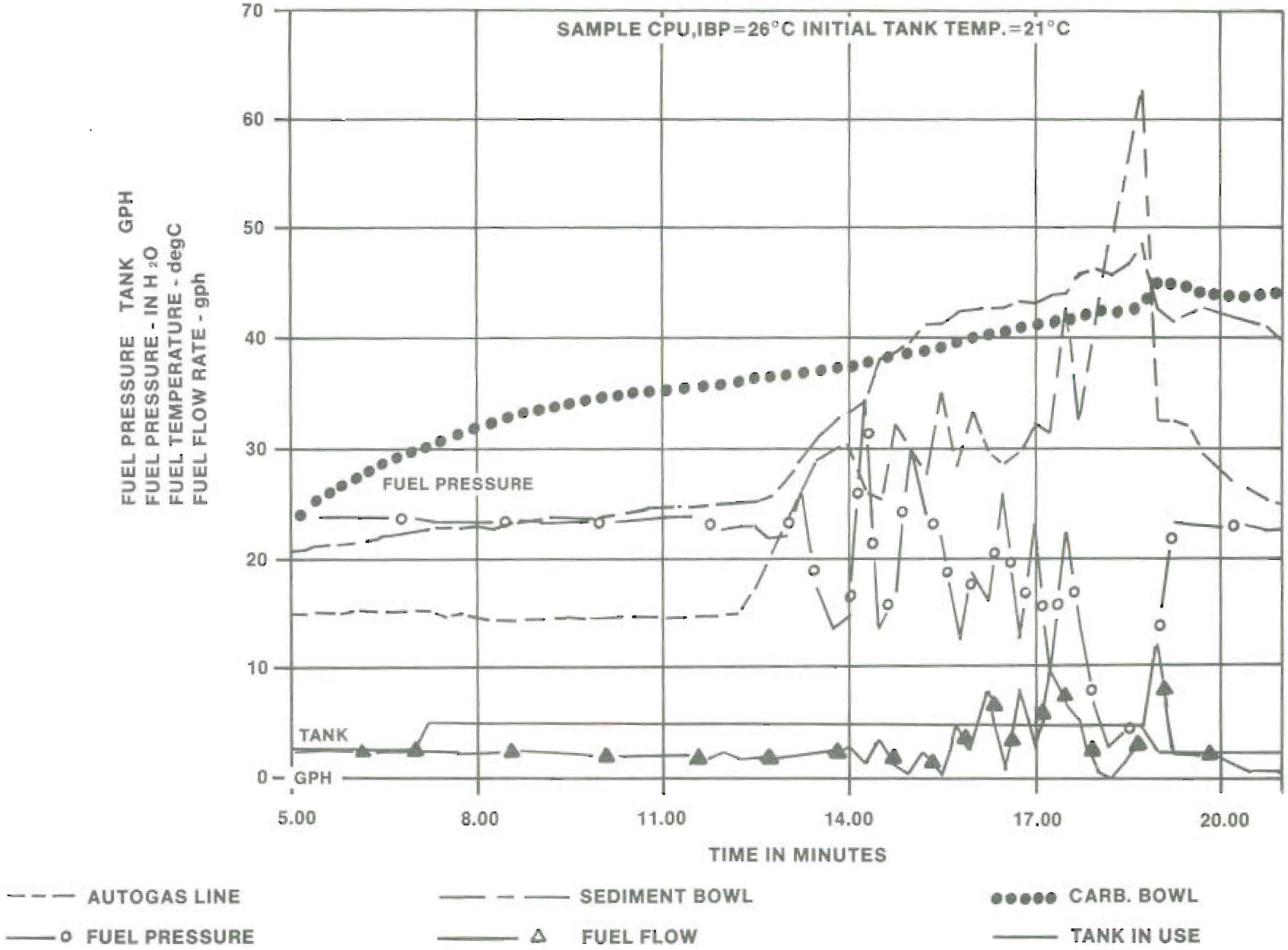

FIGURE 14. A VAPOR LOCK SEQUENCE SHOWING THE EFFECT OF THE IBP ON THE FUEL FLOW RATE AND FUEL PRESSURE

In flight, as the power output drops, one would normally expect the engine speed to drop. During the bulk of the testing, the dynamometer was operated in a constant speed mode (variable load), since recovery was easier in this configuration. Several data points were repeated to see if operating under the constant load (variable speed) mode changed the results. In the limited number of cases studied, vapor lock occurred in the same time frame and at the same temperatures.

Another testing technique which may have affected the outcome of a test was the use of the line heaters. As mentioned earlier, they were used to force the system to vapor lock when it otherwise would not. Prior to needing the heaters to induce vapor lock, they were set at a setting which kept the lines at the initial tank temperature. A limited number of data points were repeated with either the line heaters set as described or with the power to the line heaters off. The only difference noted was when the lines had a chance to cool between points. In this case, it would take about a minute, depending on fuel flow, to heat the metal in the lines to the initial tank temperature, then the system's behavior would mimic the runs with the line heaters on. This gave the Technical Center confidence they were not inducing vapor lock by leaving the line heaters set at the initial tank temperature.

During the vapor lock sequence, a material compatibility problem arose. The O-rings in the tank selector would swell when using autogas, and the additional friction would keep the pneumatic actuator from reliably switching tanks. The severity of this problem seemed to vary with the fuel being used and the fuel temperature, but it was difficult to quantify. There did not appear to be a correlation between the use of premium unleaded or regular unleaded autogas and the onset of this problem. It should be noted that the tank selector could be moved by hand if the pneumatic actuator was unable to complete tank selection.

FLIGHT TESTS

Numerous time history plots, similar to figure 15 were prepared, the data with similar ambient temperatures and different tank temperatures compared, and the differences in overall system temperatures noted. Based on this analysis, the highest fuel system temperatures occur during a takeoff and a maximum performance climb to altitude following a hot soak. Also, higher temperatures are observed during a descent which follows a period of operation at high power, than during any other phase-of-flight. In the touch and go scenario, this sets the stage for high fuel temperatures at the time of maximum fuel flow (i.e., go around) and, hence, the greatest chance for vapor lock.

The worst case (hot soak) can easily be approximated by conducting a static run-up as the fuel is being heated; shutting down the engine and allowing the engine to heat soak until the fuel in the tank reaches the desired temperature. An alternative is to allow the fuel in the tank to reach the desired temperature, start the engine and conduct a static run up (to takeoff power) for approximately a minute, reduce the power to idle for approximately one minute, then commence the flight tests.

Some other observations from the flight test are tabulated below.

1. For the Cessna 172 fuel system:

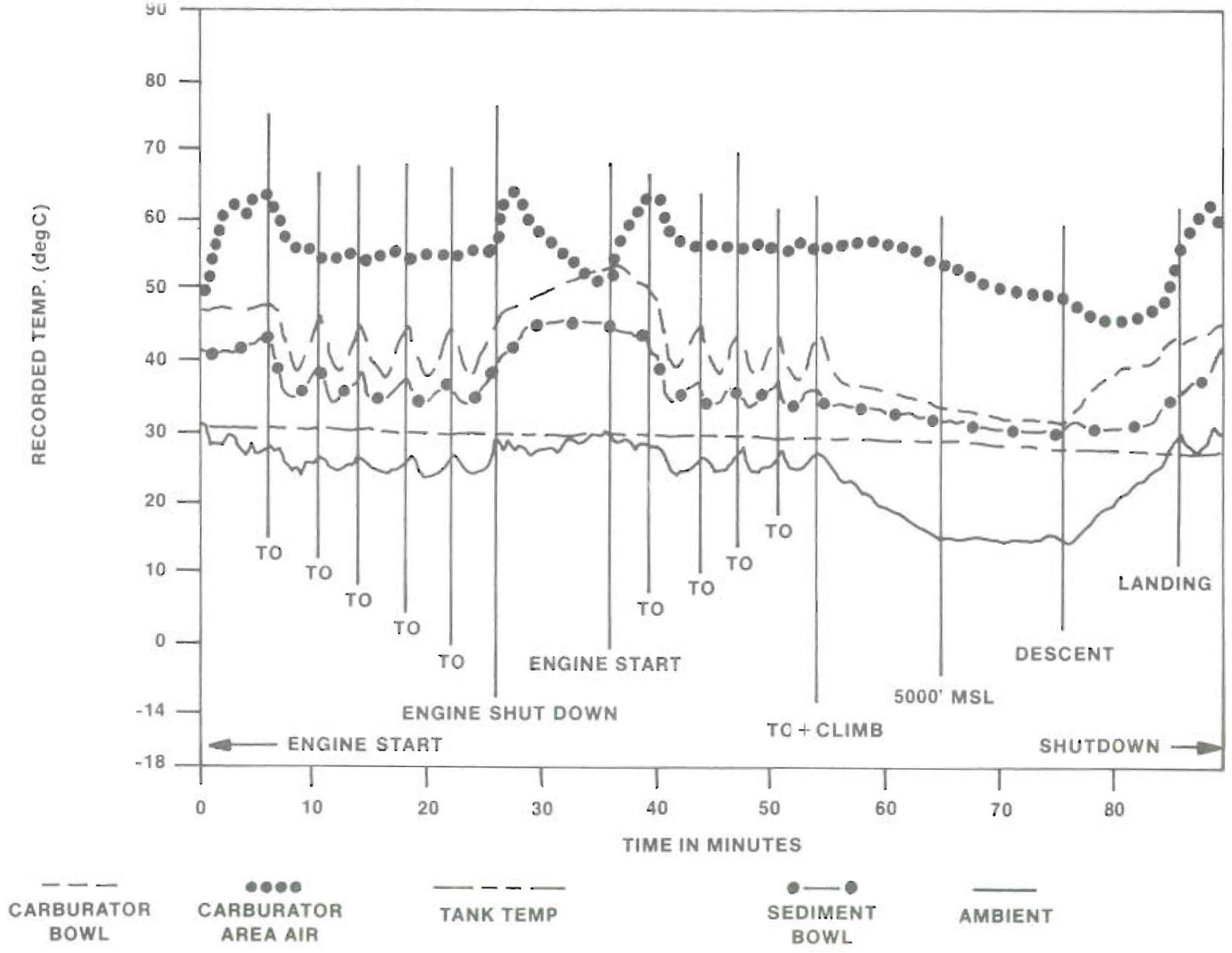

FIGURE 15. FUEL SYSTEM TEMPERATURES DURING A PHASE 1 FLIGHT WITH A C-172. (VERTICLE LINES INDICATE THE BEGINNING OF THAT PHASE OF FLIGHT; E.G., TO IS THE START OF THE TAKEOFF)

a. The hottest sediment bowl temperatures occur during descent and shutdown.

b. The hottest carburetor bowl temperatures occur during the takeoff ground roll following a hot soak.

c. Overall, the fuel system temperatures are hotter during a touch and go sequence than they are for a climb to altitude/cruise scenario.

d. For takeoff climb and cruise, two thirds of the heat (as indicated by the temperature rise) added to the fuel is added before the carburetor bowl. For descent and taxi, 50 percent of the heat is added by the time the fuel leaves the sediment bowl.

e. The temperature of the fuel in the tanks does not change significantly during the course of a 1-hour flight. This can be attributed to the tank construction which inhibits heat transfer. The size of the temperature drop is related to two things. The most obvious is the difference between ambient and the fuel temperature. The greater the difference, the greater the temperature change. The second is the initial fuel temperature. The hotter the fuel, the greater the temperature drop (given the same temperature difference with the ambient air). This is probably a consequence of increased evaporation from the tank at elevated temperatures. The largest temperature drop recorded was 5.5° C (10° F) with a mean difference between ambient and tank temperature of 11° C (20° F) during the course of an 85-minute flight. In general, tank level had a negligible effect on temperature drop because of the increased wetted area with increasing tank level.

f. The hottest carburetor area air temperature recorded was 65° C (149° F) on a 37° C day, which is consistent with the 65 to 68° C observed on the dynamometer installation during takeoff. Likewise, the carburetor bowl and the sediment bowl temperatures which were observed were consistent with the dynamometer data.

2. For the PA 28-140 fuel system:

a. The sediment bowl temperature tended to track the ambient temperature because of its installation in a separate enclosure. Not all Cherokee models have this feature.

b. The hottest temperatures recorded at the engine driven pump inlet and engine driven pump outlets were recorded during a hot soak. The hottest carburetor bowl temperatures occurred immediately following an engine start after a hot soak.

c. Overall, the highest fuel temperatures occur during a descent followed by a takeoff.

d. For takeoff and climb, 70 percent of the heat added to the fuel system occurs between the sediment bowl outlet and the engine driven pump inlet. For cruise and descent, 50 percent of the heat is added before the engine driven pump inlet and the balance is added as the fuel is pumped into the carburetor bowl.

e. The tank temperature tends to collapse onto ambient after as little as one hour. This is a wet wing design which maximizes heat transfer. Once again, there does not appear to be a fill level effect due to increased wetted area with fill level. There does not appear to be a fuel temperature effect as there was with the C-172 fuel system. In this case, the evaporative cooling is probably masked by the large amount of heat conducted across the tank's skin.

f. The maximum temperatures recorded for the sediment bowl (engine pump inlet, engine pump outlet, and carburetor bowl) were all consistent with the temperatures noted during the dynamometer operations conducted with the suction feed fuel system.

The above give credence to testing the hot fuel under takeoff and climb to altitude conditions. Takeoff and climb power settings result in the most turbulence in the fuel system, hence, the greatest probability for vapor lock. Takeoff conditions result in hot cowling temperatures, especially following a hot soak or a period of extended idling. The reduced atmospheric pressure, as the climb continues, increases the probability of vapor lock.

CONCLUSIONS

The conditions which define the worst case for vapor lock testing (i.e., most likely to result in vapor lock) are as follows.

1. Takeoff fuel flow.

2. Initial fuel temperature between 38 and 43 degrees Celsius (100 to 110 degrees Fahrenheit).

3. Ambient air temperature of 29 degrees Celsius or higher (85 degrees Fahrenheit).

4. Engine at operating temperatures typically found after a prolonged idling or a hot soak.

5. ASTM class E (winter grade) fuel if the testing is for autogas.

In preparing the aircraft for testing with autogas, the fuel temperature should not be allowed to exceed 43 degrees Celsius (110 degrees Fahrenheit).

The technique for heating the fuel used in vapor lock studies does not affect the outcome of the test sequence provided the fuel is fresh; it is stored in sealed barrels until the beginning of the test sequence, and the fuel is heated to temperature within three hours.

For every condition tested, autogas was more severe than avgas for vapor lock. Hence, any fuel system which is capable of operating on autogas will be capable of operating on avgas.

Detonation on autogas is related to the Motor Octane Number (MON). An engine certified for 91/96 octane avgas may detonate on regular unleaded autogas at typical cruise power settings. The octane rating of autogas does not change significantly when stored in wings for up to six months.

There is a weak relationship between the Reid Vapor Pressure (RVP) of a fuel and the tendency to vapor lock as measured by the sediment bowl temperature (figure 13). The blending technique used by the refiner will have a significant effect on the vapor lock characteristics. As a group, the ASTM class E (RVP equals 13.5 pound per square inch (psi) or higher), autogases are the worst case for vapor lock.

There was a minor material compatibility problem between the fuel system used during these tests and autogas, but it would not present a serious problem in an operational aircraft.

Evaporation can result in a significant loss of fuel when using autogas. In one case, this exceeded 33 percent of the initial volume of the fuel.

REFERENCES

1. Functional Compatibility Analysis of Aircraft Engine Fuel Systems, Ceasar Gonzalez, Cessna Aircraft Corporation, Society of Automotive Engineers, Report 690308, From the Proceedings of the National Business Aircraft Meeting, March 26 - 18, 1969.

2. Pratt and Whitney Aeronautical Vest Pocket Handbook, July 1979 Edition.

3. Ferrara, A. M., Avgas/Autogas Comparison, Winter Grade Fuels, Federal Aviation Administration Technical Center, Report No. DOT/FAA/CT-86/21, July 1986.

4. Wares, R. and Allsup, J., Weathering Effects on Fuel Quality, National Institute for Petroleum and Energy Resources, To Be Published.

5. Wares, R. and Allsup, J., Weathering Effects on Autogas, National Institute for Petroleum and Energy Resources, Federal Aviation Administration Technical Center, Report No. DOT/FAA/CT-TN86/54, October 1985.

6. Rice, L., Effects of Heating and Agitation Upon Autogas Volatility, Federal Aviation Administration Technical Center, Report No. DOT/FAA/CT-TN86/32. December 1986.

7. Telephone Conversations with Dick Roemer, Senior Project Engineer, Experimental Aircraft Association, July 17, 1986 and July 18, 1986.

APPENDIX A

DISTRIBUTION LIST

Civil Aviation Authority (5)
Aviation House
129 Kingsway
London WC2B 6NN England

Embassy of Australia (1)
Civil Air Attache
1601 Mass. Ave. NW
Washington, DC 20036

Scientific & Tech. Info FAC (1)
ATTN: NASA Rep.
P.O. Box 8757 BWI Airport
Baltimore, MD 21240

Northwestern University (1)
Trisnet Repository
Transportation Center Library
Evanston, ILL 60201

DOT-FAA AEU-500 (4)
American Embassy
APO New York, NY 09667

University of California (1)
Service Dept Institute of
Transportation Standard Lib
412 McLaughlin Hall
Berkely, CA 94720

British Embassy (1)
Civil Air Attache ATS
3100 Mass Ave. NW
Washington, DC 20008

Director DuCentre Exp DE LA (1)
Navigation Aerineene
941 Orly, France

ANE-40	(2)	ACT-61A	(2)	ASW-53B	(2)
ASO-52C4	(2)	AAL-400	(2)	AAC-64D	(2)
APM-13 Nigro	(2)	M-493.2 Bldg. 10A	(5)	ACE-66	(2)
AEA-61	(3)	APM-1	(1)	ADL-1	(1)
ADL-32 North	(1)	APA-300	(1)	ALG-300	(1)
AES-3	(1)	AGL-60	(2)	ACT-5	(1)
ANM-60	(2)				

FAA, Chief, Civil Aviation Assistance Group (1)
Madrid, Spain
c/o American Embassy
APO-New York 09285-0001

Al Astorga (1)
Federal Aviation
Administration (CAAG)
American Embassy, Box 38
APO-New York 09285-0001

Dick Tobiason (1)
ATA of America
1709 New York Avenue, NW
Washington, DC 20006

Burton Chesterfield, DMA-603 (1)
DOT Transportation Safety Inst.
6500 South McArthur Blvd.
Oklahoma City, OK 73125

FAA Anchorage ACO
701 C Street, Box 14
Anchorage, Alaska 99513

FAA Atlanta ACO
1075 Inner Loop Road
College Park, Georgia 30337

FAA Boston ACO
12 New England Executive PArk
Burlington, Mass. 01803

FAA Brussels ACO
% American Embassy, APO,
New York, NY 09667

FAA Chicago ACO
2300 E. Devon, Room.232
Des Plains, Illinois 6008

FAA Denver
10455 East 25th Ave., Suite 307
Aurora, Colorado 98168

Frank Taylor
3542 Church Road
Ellicott City, MD 21043

Mr. Gale Braden (FAA)
5928 Queenston St.
Springfield, VA 22152

Richard E. Livingston, Jr.
Director, Aerotech Operations for
the IAPA Group
1805 Crystal Drive, Suite 1112 South
Arlington, VA 22202

FAA Fort Worth ACO
P.O. Box 1689
Fort Worth, TX 76101

FAA Long Beach ACO
4344 Donald Douglas Drive
Long Beach, CA 90808

FAA Los Angeles ACO
P.O. Box 92007, Worldway Postal Center
Hawthorne, CA 90009

FAA New York ACO
181 So. Frankline Ave., Room 202
Valley Stream, NY 11581

FAA Seattle ACO
17900 Pacific Highway South, C-68966
Seattle, Washington 98168

FAA Wichita ACO
Mid Continent Airport, Room 100 FAA Bldg.
1891 Airport Road
Wichita, KA 67209

Dr. Hans A. Krakauer
Deputy Chairman, International Airline
Pilots Association Group
Apartado 97
8200 Albufeira, Portugal

Geoffrey Lipman
Executive Director, President du Conseil
International Foundation of Airline
Passenger Associations
Case Postale 462, 1215 Geneve
15 Aeroport, Suisse, Geneva

ASF-1 - Office of Aviation Safety

AST-1 - Office of Science & Advanced Technology

APM-1 - Program Engineer & Maintenance Service

AVS-1 - Associate Administrator for Aviation Standards

AWS-1 - Office of Airworthiness

AWS-1 - Aircraft Engineering Division

Mr. Steve Brown
AOPA
421 Aviaiton Way
Frederick, MD 21701

Mr. Richard Kirsch, AWS-120
DOT/FAA National Headquarters
800 Independence Ave., SW.
Washington, DC 20591

Mr. Dick Roemer
EAA Aviation Foundation
Whitman Airfield
Oshkosh, WI 54903-2591

Mr. Jim Peterson, ACE-140W
DOT/FAA Central Region
1801 Airport Road, Room 100
Wichita, KS 67209

Mr. Richard F. Yotter, ACE-111
DOT/FAA Central Region
601 East 12th Street
Kansas City, MO 64106

Mr. Raymond V. Boice, ACE-107
DOT/FAA Central Region
601 East 12th Street
Kansas City, MO 64106

Mr. Bob Alpiser
Chicago ACO
2300 East Devon
Des Plaines, IL 60018

Mr. Roy Hettenbach, ANE-174
New York ACO
181 South Franklin Avenue
Room 202
Valley Stream, NY 11581

Mr. Richard N. Wares
National Institute for
Petroleum & Energy Research
P.O. Box 2128
Bartlesville, OK 74005

National Business Aircraft
Association
One Farragut Square South
Washington, DC 20006

Mr. Dave Bently
Aerospace Program Manager
Society of Automotive Engineers
400 Commonwealth Drive
Warrendale, PA 15096

Aerospatiale Helicopter Corporation
2701 Forum Drive
Grand Prairie, TX 75053-4005

Air Tractor, Inc.
P.O. Box 485
Olney, TX 76374

Avtek Corporation
509 Calle Carga
Camarillo, CA 93010

Beech Aircraft Corporation
Box 85
Wichita, KS 67204

Bell Helicopter Textron
P.O. Box 482
Fort Worth, TX 76101

British Aerospace, Inc.
P.O. Box 17414
Dulles Int'l Airport
Washington, DC 20041-0414

CASA Aircraft USA, Inc.
1215 Jefferson Davis Highway
Suite 404
Arlington, VA 22202

Christen Industries, Inc.
Aircraft Manufacturing Division
P.O. Box 547
Afton, WY 83110

DeHavilland Aircraft of Canada
Garratt Boulevard
Downsview, Ontario M3K 1Y5
CANADA

Embraer Aircraft Corporation
276 SW. 34 Street
Fort Lauderdale, FL 33315

Fairchild Aircraft Corporation
P.O. Box 32486
San Antonio, TX 78284

Gates Learjet Corporation
P.O. Box 11186
Tuscon, AZ 85734

Burkhart-Grob of America
1070 Navajo Drive
Bluffton Airport Complex
Bluffton, OH 45817

Hynes Aviation Industries
P.O. Box 697
Frederick, OK 73542

Lake Aircraft
Laconia Airport Hangar 1
Laconia, NH 03246

Mael Aircraft Corporation
Box 138
Portage, WI 53901

McDonnell Douglas Corporation
3855 Lakewood Boulevard
Long Beach, CA 90846

MBB Helicopter Corporation
900 Airport Road
P.O. Box 2349
West Chester, PA 19380

Mooney Aircraft Corporation
P.O. Box 72
Kerville, TX 78028-0072

Mudry Aviation, Ltd.
Dutchess City Airport
Route 376
Wappingers Falls, NY 12590

OMAS, Inc.
P.O. Box 3530
Albany, GA 31708

Melex USA, Inc.
1200 Front Street
Suite 101
Raleigh, NC 27609

Robinson Helicopter Company
24747 Crenshaw Boulevard
Torrance, CA 90505

SAAB Aircraft of America, Inc.
P.O. Box 17188
Dulles International Airport
Washington, DC 20041

Schleicher Sailplanes, Inc.
P.O. Box 118
Port Matilda, PA 16870

Shorts Brothers, USA, Inc.
2011 Crystal Drive
Suite 713
Arlington, VA 22202

Sikorsky Aircraft
North Main Street
Stratford, CT 06601

Skytrader Aircraft Corporation
Richards-Gebaur Air Base
P.O. Box 345
Kansas City, MO 64141

Weatherly Aviation Company
2304 San Felipe Road
Hollister, CA 95023

Mr. Neils Andersen
Senior VP - Engineering
AVTEK Corporation
4680 Calle Carga
Camarillo, CA 93010

Dean Ernest J. Cross, Jr.
College of Engineering
Old Dominion University
Norfolk, VA 23508

Mr. Robert W. Koenig
NASA Langley Reserach Center
Mail Stop 352
Hampton, VA 23665-5225

Mr. Harold C. Pierce
Honeywell, Inc.
1625 Zarthan Avenue, South
P.O. Box 312
St. Louis Park, MN 55416

Dr. Frederick O. Smetana
North Carolina State University
P.O. Box 5246
Raleigh, NC 27650

Mr. Robert J. Stewart
Program Manager
Gulfstream Aerospace Corp, B-08
P.O. Box 2206
Savannah, GA 31402

Mr. Charles M. Turrentine
Engineering Specialist
General Dynamics Corporation
P.O. Box 748, M/S 1772
Fort Worth, TX 76101

Mr. John H. Wells
Cessna Aircraft Company
Department 178
P.O. Box 7704
Wichita, KS 67277

Mr. David C. Yeoman
Collins-Rockwell
MS 124-111
400 Collins Road, NE.
Cedar Rapids, IA 52498

Mr. Eric Jevons
Colt Industries
Control Systems Division
Charter Oak Boulevard
West Hartford, CT 06101

Mr. H. Daniel Smith
Engineered Fabrics Division
Goodyear Aerospace Corporation
1210 Massillon Road
Akron, OH 44315

Mr. Terence Dixon
Boeing Aerospace Corporation
P.O. Box 3999
M/S 8M-11
Seattle, WA 98124

Mr. W. Locke Easton, ANE-141
DOT/FAA New England Region
12 New England Executive Park
Burlington, MA 01803

Mr. Bob Berman, AWS-110
DOT/FAA National Headquarters
800 Independence Ave., SW.
Washington, DC 20591

Mr. Augusto M. Ferrara
DOT/FAA Technical Center
Atlantic City, NJ 08405

Mr. Paul Pendleton, ACE-140W
DOT/FAA Central Region
1801 Airport Road, Room 100
Wichita, KS 67209

Mr. Oscar E. Ball, ACE-112
DOT/FAA Central Region
601 East 12th Street
Kansas City, MO 64106

Mr. Don Jacobsen, ACE-101
DOT/FAA Central Region
601 East 12th Street
Kansas City, MO 64106

Mr. Raymond Borowski, ANE-170
New York ACO
181 South Franklin Avenue
Room 202
Valley Stream, NY 11581

Mr. Jerry Allsup
National Institute for
Petroleum & Energy Research
P.O. Box 2128
Bartlesville, OK 74005

Mr. William Ackerman
6B1 Adams Building
Bartlesville, OK 74005

General Aviaiton
Manufacturers Association
1400 K Street, NW.
Suite 801
Washington, DC 20005

Aerospatiale Aircraft Corporation
Suite 1220
1110 Vermont Avenue, NW.
Washington, DC 20005

Agusta Aviation Corporation
Norcom and Red Lion Roads
Philadelphia, PA 19154

Arctic Aircraft Company
P.O. Box 6-141
Anchorage, AK 99502

Ayres Corporation
P.O. Box 3090
Municipal Airport
Albany, GA 31708

Bellanca, Inc.
P.O. Box 964
Alexandria, MN 56308

Boeing Commercial Airplane
Company
P.O. Box 3707
Seattle, WA 98124

Canadair, Ltd.
P.O. Box 6087
Montreal H3C 3G9
CANADA

Cessna Aircraft Company
P.O. Box 1521
Wichita, KS 67201

Falcon Jet Corporation
Teterboro Airport
Teterboro, NJ 07608

DeVore Aviation Corporation
6104B Kircher Boulevard, NE.
Albuquerque, NM 87109

Enstrom Helicopter Corporation
Twin County Airport
P.O. Box 277
Menominee, MI 49858

Fokker Aircraft USA, Inc.
1199 N. Fairfax Street
Suite 500
Alexandria, VA 22314

Glaser Dirks Sailplanes, Inc.
5847 Sharpe Road
Calistoga, CA 94515

Gulfstream Aerospace Corporation
Wiley Post Airport
P.O. Box 22500
Oklahoma City, OK 73123

Atlantic Aviation Corporation
Westwind Sales
Greater Wilmington Airport
P.O. Box 15000
Wilmington, DE 19850

Litecraft, Inc.
Route 4, Box 48
Vacherie, LA 70090

Maule Aircraft Corporation
Lake Maule
Route 5, Box 319
Moultrie, GA 31768

McDonnell Douglas Helicopter
Company
Centinela and Teale Streets
Culver City, CA 90230

Mike Smith Aero
Box 430
Stanton County Airport
Johnson City, KS 67855

Morris Aviation, Ltd.
P.O. Box 718
Statesboro Airport
Statesboro, GA 30458

Jonas Aircraft and Arms
Company, Inc.
225 Broadway
New York, NY 10007

Partenavia of America
1235 Jefferson Davis Highway
#500
Arlington, VA 22202

Piper Aircraft Corporation
Box 1328
Vero Beach, FL 32961

Rogerson-Hiller Corporation
2201 Alton Avenue
Irvine, CA 92714

Graham Thomson, Ltd.
P.O. Box 1175
Pacific Palisades, CA 90272

Schweizer Aircraft Corporation
P.O. Box 147
Elmira, NY 14902

Box 51, Ltd.
Municipal Airport
Route 1, Box 102
Denton, TX 76201

PIK Pacific
1231 Second Street
Manhattan Beach, CA 90266

Dr. Edward A. Willis, Jr.
NASA Lewis Research Center
Mail Stop 77-6
21000 Brookpark Road
Cleveland, OH 44135

Ms. Alma Ramirez, ANM-100A
ACO
701 C. Street
Box 14
Anchorage, AK 99513

Mr. Russell Rogers
Aeroquip Corporation
Corporate Engineering
Jackson, MI 49203

Mr. Peter Thomas
Sundstrand Aerospace Fluid Systems
2421 11th Street
P.O. Box 7002
Rockford, IL 61125-7002

Mr. Arthur J. K. Carline
Consultant
7347 DeCelis Place
Van Nuys, CA 91406

Mr. Phil Meng
MS-500 219
NASA Lewis Research Center
21000 Brookpark Road
Cleveland, OH 44135

R. A. Lewis
Market Manager, Methyl Fuels
Celanese Chemical Corporation
1250 West Mockingbird Lane
Dallas, TX 75247-0320

Mr. Burton Chesterfield
Transportation Safety Institute, DMA-60
6500 South MacArthur Boulevard
Oklahoma City, OK 73125

Dr. Burtner
Sun Refining and Marketing
ARD Department
P.O. Box 1226
Marcus Hook, PA 19061-0526

Taylorcraft Aviation Corporation
P.O. Box 947
820 East Bald Eagle Street
Lock Haven, PA 17745

Westland, Inc.
7135 Jefferson Davis Highway
Suite 805
Arlington, VA 22202

Dr. Michael B. Bragg
Ohio State University
2300 West Case Road
Columbus, OH 43220

Dr. David Downing
Department of Aerospace Engineering
The University of Kansas
2004 Learned Hall
Lawrence, KS 66045-2221

Mr. Louis J. Williams
NASA Langley Research Center
Mail Stop 286
Hampton, VA 23665-5225

Mr. Harold P. Riesen
Chief, Mech/Env. Systems, R&D
Beech Aircraft Corporation
9709 East Central
Wichita, KS 67201

Dr. Hubert C. Smith
Assistant Professor
Pennsylvania State University
233 Hammond Building
University Park, PA 16802

Mr. Fen Taylor
Chief, Aerodyanmics & Perform
Mooney Aircraft Corporation
P.O. Box 72
Kerrville, TX 78029

Dr. Donald T. Ward
Associate Professor
Aerospace Engineering Department
Texas A&M University
College Station, TX 77843

Aircraft Designs, Incorporated
11082 Bel Aire Court
Cupertino, CA 95014

Alpha Aviation Supply Company
P.O. Box 641
Greenville, TX 75401

Amsin Aviation, Incorporated
P.O. Box 10993
Pittsburgh, PA 15236

Barnett Rotorcraft
4307 Olivehurst Avenue
Olivehurst, CA 95961

Bensen Aircraft Corporation
P.O. Box 31047
Raleigh, NC 27622

Ken Brock Manufacturing
11852 Western Avenue
Stanton, CA 90680

Bushby Aircraft, Incorporated
647 Route 52
Minooka, IL 60447

CDX Aviation Sales
11343 104th Street
Edmonton, Alberta
T5G 2K7
CANADA

Christen Industries
P.O. Box 547
Afton, WY 83110

Mr. Frank Kertis
Sun Refining and Marketing
ARD Department
P.O. Box 1226
Marcus Hook, PA 19061-0526

Mr. Gene Kingsbury
Room 6733
U.S. Department of Commerce
Washington, DC 20230

Mr. Jake Plante, AEE-200
FAA National Headquarters
Room 431
800 Independence Avenue, SW.
Washington, DC 20591

Ms. Cathy Nickolaisin
Director
New Jersey Division of Aeronautics
1035 Parkway Avenue
Trenton, NJ 08625

Acro Sport, Incorporated
P.O. Box 462
Hales Corners, WI 53130

Advanced Aviation, Incorporated
323 North Ivey Lane
P.O. Box 16716
Orlando, FL 32861

Aero Composites, Incorporated
1201 4th Street
P.O. Box 246
Fulton, IL 61252

Aerocar, Incorporated
P.O. Box 1171
Longview, WA 98632

Air Command Manufacturing, Incorporated
Route 3
P.O. Box 197A
Liberty, MO 64068

Denney Aerocraft Company
6140 Morris Hill Lane
Boise, ID 83704

Diehl Aero-Nautical
1855 North Elm
Jenks, OK 74037

Earthstar Aircraft, Incorporated
Star Route
P.O. Box 313
Santa Margarita, CA 93453

Eipper Aircraft
26531 Ynez Road
Temecula, CA 92390

Fisher Flying Products, Incorporated
Route 2
P.O. Box 282
South Webster, OH 45682

Freedom Master Corporation
450 Hamlin Avenue
Satellite Beach, FL 32937

INAV Limited
895 West 20th Avenue
P.O. Box 2984
Oshkosh, WI 54903

Ken Knowles Sport Aircraft, Incorporated
104 East Avenue
K-4, Unit G
Lancaster, CA 93535

Kolb Company
Rural Delivery 3
P.O. Box 38
Phoenixville, PA 19460

Light Aero, Incorporated
4823 Aviation Way
P.O. Box 728
Caldwell, ID 83606

Light Miniature Aircraft
Building 414
Opa-Locka Airport
Opa Locka, FL 33054

Loehle Aviation, Incorporated
Shipmans Creek Road
Wartrace, TN 37183

National Aeronautics and Manufacturing
Company, Incorporated
P.O. Box 1718
Independence, MO 64055

Neico Aviation
403 South Ojai Street
Santa Paula, CA 93060

Nostalgair, Incorporated
4823 Aviation Way
P.O. Box 2049
Hendersonville, NC 28739

Nuwaco Aircraft
2978 East Euclid Place
Littleton, CO 80121

Barney Oldfield Aircraft
P.O. Box 228
Needham, MA 02192

Osprey Aircraft
3741 El Ricon Way
Sacremento, CA 95825

Pazmany Aircraft Corporation
P.O. Box 80051
San Diego, CA 92138

Prescott Aeronautical Corporation
1006 West 53rd Street, N.
P.O. Box 4590
Wichita, KS 67204

Quad City Aircraft Corporation
3610 Coaltown Road
Moline, IL 61265

Quickie Aircraft Corporation
Hanger 68
Mojave Airport
Mojave, CA 93501

Rand Robinson Engineering, Incorporated
5395 Industrial Drive
Suite A
Huntington Beach, CA 92649

Rans Company
1104 East Highway 40 Bypass
Hays, KS 67601

Rotec Engineering, Incorporated
P.O. Box 220
Duncanville, TX 75138

Rotorway Aircraft
7411 West Galveston
Chandler, AZ 85224

Sequoia Aircraft Corporation
2000 Tomlynn Street
P.O. Box 6821
Richmond, VA 23230

Silhouette Aircraft Sales, Incorporated
848 East Santa Maria Street
Santa Paula, CA 93060

Sorrell Aviation, Limited
16525 Tilley Road, S.
Tenino, WA 98589

Spencer Amphibian Air Car, Incorporated
11019 Glenoaks Boulevard
Pacoima, CA 91331

Squadron Aviation, Incorporated
P.O. Box 2376
Columbus, OH 43223

Star-Lite Aircraft, Incorporated
2219 Orange Blossom
San Antonio, TX 78247

Stoddard-Hamilton Aircraft, Incorporated
18701 58th Avenue, NE.
Arlington, WA 98223

Stolp Starduster Corporation
4301 Twining
Flabob Airport
Riverside, CA 92509

Swearingen Aircraft Corporation
1234 99th Street
San Antonio, TX 78214

Teenie Company
P.O. Box 625
Coolidge, AZ 85228

Ultimate Aerobatics, Limited
Guelph Airpark
Guelph, Ontario
N1H 6H8
CANADA

Van's Aircraft, Incorporated
P.O. Box 160
North Plains, OR 97133

Wag-Aero, Incorporated
P.O. Box 181
Lyons, WI 53148

War Aircraft Replica, Incorporated
348 South Eighth Street
Santa Paula, CA 93060

White Lightning Aircraft Corporation
P.O. Drawer 40
Sheldon, SC 29941

Zenair, Limited
25 King Road
Nobleton, Ontario
LOG 1NO
CANADA

Mr. Hank Burwash, ANM-174W
Western ACO
P.O. Box 92007
Worldway Postal Center
Los Angeles, CA 90009-2007

Mr. Jack Acampora, ANM-174W
Western ACO
P.O. Box 92007
Worldway Postal Center
Los Angeles, CA 90009-2007

Mr. Jay Nelson
SW-FSDO-67
FAA Building, Room 111
Wiley Post Airport
Bethany, OK 73008

Mr. Wayne Gaulzetti, ANE-153
FAA New England Region
12 New England Executive Park
Burlington, MA 01803

Mr. Harold L. Mesaris
Manager, Field Investigations
Avco Lycoming Textron
652 Oliver Street
Williamsport, PA 17701

☆U.S. GOVERNMENT PRINTING OFFICE: 1987—704-075/60034