DOT/FAA/CT-89/32

FAA Technical Center
Atlantic City International Airport
N.J. 08405

Fire Hazards of Aerosol Cans in Aircraft Cargo Compartments

David R. Blake

FEDERAL AVIATION ADMINISTRATION
JUL 15 1999
TECHNICAL CENTER LIBRARY
ATLANTIC CITY INT'L AIRPORT, NJ 08405

December 1989

Final

This document is available to the U.S. public through the National Technical Information Service, Springfield, Virginia 22161.

U.S. Department of Transportation
Federal Aviation Administration

Technical Report Documentation Page

1. Report No.	2. Government Accession No.	3. Recipient's Catalog No.
DOT/FAA/CT-89/32		

4. Title and Subtitle	5. Report Date
FIRE HAZARDS OF AEROSOL CANS IN AIRCRAFT CARGO COMPARTMENTS	December 1989
	6. Performing Organization Code
7. Author(s) David R. Blake	8. Performing Organization Report No. DOT/FAA/CT-89/32
9. Performing Organization Name and Address Federal Aviation Administration Technical Center Atlantic City International Airport, NJ 08405	10. Work Unit No. (TRAIS)
	11. Contract or Grant No.
12. Sponsoring Agency Name and Address U.S. Department of Transportation Federal Aviation Administration Technical Center Atlantic City International Airport, NJ 08405	13. Type of Report and Period Covered Final Report
	14. Sponsoring Agency Code ACD-240

15. Supplementary Notes

16. Abstract

The purpose of this project was to determine the hazards associated with aerosol cans involved in cargo fires. Over the last several years the chlorofluorocarbon propellant used in aerosol cans has been replaced with hydrocarbons such as butane, propane, and isobutane. These flammable gases would normally be prohibited on passenger carrying airplanes but there is an exception for up to 75 ounces per person for medicinal and toilet articles when carried in checked baggage only. Seven fire tests involving aerosol cans were conducted in an 800-cubic-foot cargo compartment. The main conclusions of the study were that hydrocarbon propellants in aerosol cans increase the damage potential of luggage fires; the fires in a simulated Class D compartment where aerosol cans ruptured and ignited were not containted; a Class C compartment provides significantly more protection against aerosol can fire threat than does a Class D compartment; an aerosol can rupturing and igniting in a Class D or Class C cargo compartment would eliminate the compartment's ability to control ventilations and drafts; and aerosol cans would be exposed to elevated temperatures for a longer period of time in a luggage fire in a Class D compartment than in a Class C compartment.

17. Key Words	18. Distribution Statement
Aerosol Cans Cargo Fires Flammable Gases	Document is available to the public through the National Technical Information Service, Springfield, Virginia 22161

19. Security Classif. (of this report)	20. Security Classif. (of this page)	21. No. of Pages	22. Price
Unclassified	Unclassified	21	

Form DOT F 1700.7 (8-72) Reproduction of completed page authorized

TABLE OF CONTENTS

	Page
EXECUTIVE SUMMARY	v
INTRODUCTION	1
Purpose	1
Background	1
DISCUSSION	2
Test Article	2
Test Results	2
CONCLUSIONS	5
REFERENCES	5
APPENDIX	
A -- Cargo Compartment FAR 25.857 Class A through E	

LIST OF ILLUSTRATIONS

Figure		Page
1	Test Article	7
2	Instrumentation Location - Side View	8
3	Instrumentation Location - End View	9
4	Cabin View of Exploding Can - Test 3 (2 Sheets)	10
5	Below Ceiling Temperatures	12
6	Mid-Cabin Smoke - Test 3	13
7	Halon Concentration	13
8	Can Rupture - Test 6 (2 Sheets)	14
9	Can Rupture - Test 7 (2 Sheets)	16

EXECUTIVE SUMMARY

The purpose of this project was to determine the hazards associated with aerosol cans involved in cargo fires and to determine the ability of Class D and Class C cargo compartments to contain those fires. Over the last several years the chlorofluorocarbon propellants used in aerosol cans has been replaced with hydrocarbons. The hydrocarbons used are typically a blend of butane, propane, and isobutane. These are classified as flammable gases are are normally prohibited from being carried on passenger airplanes. However there is an exception for medicinal and toiletries of up to 75 ounces net weight in checked baggage only. Aerosols are not permitted in carry-on baggage.

Seven fire tests were conducted on aerosol cans in an 800-cubic-foot cargo compartment. The cans were placed in burning luggage and exposed to 400-degree Fahrenheit air from a heat gun.

The study concluded that aerosol cans with hydrocarbon propellants increase the damage potential in luggage fires; the fires in a simulated Class D compartment where aerosol cans ruptured and ignited were not contained; Class C compartments provide significantly more protection than Class D compartments; an aerosol can rupturing and igniting in a Class C or Class D compartment would eliminate the compartment's ability to control ventilation and drafts; and aerosol cans would be exposed to elevated temperatures for a longer period of time in a luggage fire in a Class D compartment than in a Class C compartment.

INTRODUCTION

PURPOSE.

The purpose of this project was to experimentally determine the damage potential of aerosol cans with hydrocarbon propellants when involved in aircraft cargo compartment fires.

BACKGROUND.

Over the last several years the chlorofluorocarbon propellant used in aerosol cans has been replaced with hydrocarbons due to the environmental hazards associated with chlorofluorocarbons. The propellant used in many toiletry and household aerosols sold today is a combination of butane, propane, and isobutane. Title 49 Code of Federal Regulations (CFR) 175.101 contains a list of hazardous materials and their classifications. Butane, propane and isobutane are classified as flammable gases and are prohibited on passenger carrying aircraft. However, Title 49 CFR 175.101 provides an exception to this by permitting the carriage in checked baggage only of up to 75 ounces (net weight ounces or fluid ounces) of medicinal and toilet articles and aerosols, with no subsidiary risk, for sporting or home use. Aerosols are not permitted in the aircraft cabin.

The lower lobe cargo compartments on commercial transport aircraft are classified as either Class D or Class C. Class C compartments are required to have a smoke detection system, a fire suppression system, and the ability to limit airflow into the compartment. The suppression agent currently in use is Halon 1301. Class D compartments are not required to have smoke detection and fire suppression systems, instead they depend on relatively low leakage rates and small compartment volumes so that oxygen starvation controls any fires that are likely to occur. Both Class C and Class D compartments are designed to limit the leakage from the compartments but for different reasons. Class C compartments limit leakage so that after smoke detection and agent discharge, the agent concentration remains sufficiently high to suppress the fire until a safe landing can be made. Class D compartments limit leakage to starve a fire of oxygen. Since this is the only means of fire control it is more critical that Class D compartments remain tightly sealed than it is for Class C compartments. The full description of cargo compartment classifications is listed in appendix A. One additional design feature of many cargo compartments that is relative to this project is the ability of the compartment to rapidly relieve large pressure differentials between the compartment and passenger cabin. This feature is necessary in case of a rapid decompression that could occur if a cargo door failed in flight. Should this happen the cargo compartment liners on some airplanes are designed to separate from their fasteners relatively easily to equalize the pressure differential and prevent the cabin floor from being pulled down into the compartment.

DISCUSSION

TEST ARTICLE.

The test article used was the aft cargo compartment of a DC-10-30CF fuselage. The compartment volume was approximately 800 cubic feet. Galvanized steel was used as a cargo liner for the majority of the compartment. A 115- by 35-inch

section of fiberglass ceiling liner was installed directly above the area where the fires were to be started (figure 1). The edges of the fiberglass where notched and held in place with an aluminum strip that pressed the liner against the ceiling structure. This simulated a design used in some airplanes to allow the liners to pull free of the ceiling structure in the case of a decompression in flight.

In-flight air flow conditions were replicated in the fuselage. Ventilation was supplied to the cabin through two 10-inch perforated ducts that ran the length of the cabin at ceiling level. Air exited the cabin through vents in the lower sidewalls and an outflow valve located in the aft underside of the fuselage. The ventilation rate provided one change of cabin air approximately every 4 minutes.

A Halon 1301 fire suppression system was installed in the cargo compartment. The system was sized to provide an agent concentration of approximately 5 percent in the empty compartment through two nozzles in the compartment ceiling. A CO_2 fire suppression system was also installed in the compartment.

A total of five chromel/alumel thermocouples were installed on the cargo compartment ceiling: two of these were on the compartment centerline and three were on the section of fiberglass ceiling liner. A differential pressure transducer with a range of 0-1.0 psi was installed outside the cargo compartment and measured the difference between cargo compartment pressure and ambient. A smoke meter was also installed in the cargo compartment at ceiling level. Six additional smoke meters were installed in the cabin of the test article. They were placed at two stations in the cabin at three different heights for each station. The heights of the smoke meters were 25, 49, and 72 inches above the cabin floor. The concentrations of oxygen, carbon dioxide, carbon monoxide, and Halon 1301 were measured in the compartment at two different heights using Beckman infrared analyzers. The air inside the cargo compartment was also sampled by a Perkin-Elmer mass spectrometer that measured the concentrations of oxygen, carbon dioxide, propane, and butane. The thermocouple, smoke meter and infrared analyzer data were sampled and recorded every 5 seconds. The pressure transducer data were recorded continuously, and the mass spectrometer data were recorded approximately every 30 seconds. Figures 1, 2, and 3 show the location of the instrumentation and the fire load in the test article.

TEST RESULTS.

A total of seven tests were conducted on aerosol cans. Five tests were conducted with aerosol cans in a burning suitcase in the cargo compartment. For these tests, either one or two aerosol cans were placed in a suitcase filled with rags, newspaper, and a small amount of alcohol. This was ignited with nichrome wire. This suitcase was placed among several other suitcases filled with rags to simulate a bulk-load cargo compartment. A partially loaded cargo compartment was simulated by filling approximately 40 percent of the compartment volume with cardboard boxes filled with packing foam. These boxes were used to displace air in the compartment and were not involved in any of the fires. A ceiling mounted photoelectric smoke detector was installed in the compartment for each of the first three tests. Two additional tests were conducted using a heat gun to heat the cans until they burst. Halon was discharged into the compartment before the can burst for one test but no halon was discharged for the other test. Oil burner electrodes were placed in the cargo compartment and energized for both of these tests. The following is a brief description of test conditions and results.

Test 1. One 9-ounce hair spray can and one 4-ounce deodorant can in burning suitcase. The smoke detector alarmed at 1 minute, 13 seconds (1:13). The cans had not exploded when the test was terminated at 12 minutes with the CO_2 suppression system. The test was terminated because of poor visibility in the compartment after 12 minutes.

Test 2. One 9-ounce hair spray can and one 4-ounce deodorant can in burning suitcase. The smoke detector alarmed at 40 seconds. The first can exploded at 3:20 with an overpressure of 0.08 pounds per square inch (psi). The second can exploded at 3:34 with an overpressure of 0.30 psi. Halon was discharged into the compartment at 3:42 and extinguished the fire. A small section of the fiberglass ceiling liner was pushed into the space between the compartment ceiling and the cabin floor. This left an opening in the compartment ceiling of approximately 1/2 square foot.

Test 3. One 9-ounce hair spray can and one 4-ounce deodorant can in burning suitcase. The smoke detector alarmed at 45 seconds. The first can exploded at 4:49 with an overpressure of 0.52 psi. The second can exploded at 5:17 with an overpressure of 0.08 psi. CO_2 was used to extinguish the fire at 5:57. There was extensive smoke in the cabin at that time. Approximately 1.5 square feet of ceiling liner was forced out of its holder. The test article was damaged in several areas as a result of this test. A section of cabin floor was blown out, and a fireball was visible in the cabin. A door to the cargo compartment was blown open, and the aluminum structure that was used to close off the end of the fuselage was forced open in several places. Figure 4 shows the initial explosion in the cabin. The frames are 1/8th of a second apart.

Test 4. One 9-ounce can of hair spray in burning suitcase. Can exploded at 5:19 with an overpressure of 0.18 psi. CO_2 was used to extinguish the fire.

Test 5. Two 9-ounce hair spray cans in burning suitcase. The first can exploded at 2:22 with an overpressure of 0.25 psi. The second can exploded at 3:25 with an overpressure of 0.04 psi. CO_2 was used to extinguish the fire.

Test 6. One 7-ounce can of air freshener exposed to 400-degree Fahrenheit (^{o}F) air from a heat gun. Halon was discharged into the compartment at 3 minutes. The can burst at 6:26, but the contents did not ignite and no overpressure was recorded. The halon concentration at the time the can burst was approximately 4.5 percent. The oil burner electrodes were energized for the entire test.

Test 7. One 7-ounce can of air freshener exposed to 400 ^{o}F air from a heat gun. Halon was not discharged into the compartment for this test. The can burst at 5:04 and the contents ignited in a fireball. The ignition point of the escaping gas was near the bottom of the can and not at the oil burner electrodes. No overpressure was recorded. The boxes near the can burned briefly after the fireball subsided and then self-extinguished.

The test scenarios were chosen to determine the ability of Class C and Class D cargo compartments to control fires involving aerosol cans. Figure 5 is a graph of the temperature on the ceiling of a simulated Class D cargo compartment taken from reference 1. As can be seen from the graph, the temperature on the ceiling with fiberglass liners and no forced air into the compartment was still above 700 ^{o}F 15 minutes after the start of the fire. From that it can be concluded that aerosol cans could be subjected to elevated temperatures for at least 15

minutes in a Class D compartment before oxygen starvation controls the fire. During the five tests with aerosol cans in a burning suitcase, the cans exploded in four tests. Test 1 was terminated after 12 minutes without the cans exploding. In the remaining four tests the earliest the cans exploded was 2:22 seconds and the latest explosion was at 5:19 seconds. In all four of these tests the cargo liners were forced out of their holders which allowed cabin ventilation air into the compartment. In tests 6 and 7, the cans were heated with 400 °F air and ruptured at 6:26 and 5:04. In all six tests where the cans ruptured, they did so well before the 15 minutes that was needed to control a luggage fire in a simulated Class D compartment (reference 1). If an aerosol can did rupture in a Class D cargo compartment, it is likely that the liners would be opened up and the fire containment ability of the compartment would be eliminated. Figure 6 shows the level of smoke in the cabin after the cans exploded in test 3.

Previous fire testing has also been conducted on Class C cargo compartments (reference 2). Two of the conclusions from that work were:

1. The halon extinguishing system effectively suppressed the initial flames and effectively controlled the fire provided that ceiling liner burnthrough did not occur.

2. The smoke detection system did not always give early warning of fire and, subsequently, gave false indications of the levels of smoke in the compartment.

Table 1 is taken from reference 2 and shows the times for smoke detection in a simulated Class C compartment with burning luggage. The times for smoke detection ranged from 10 seconds to 250 seconds with an average time of 122 seconds. The earliest time for a can to rupture in the six tests where rupture occured was at 142 seconds. Using this approach it can be stated that it is likely that smoke detection would occur and the fire successfully suppressed before a can would rupture. This is assuming that the halon was discharged shortly after smoke detection and that ceiling liner burnthrough did not occur.

In the case where a can ruptured before halon discharge, it was shown in test 2 that the subsequent discharge of halon extinguished the fire. However, in that test the cargo liners were forced out of the holders and agent concentration was not maintained as designed. Figure 7 shows the decay of extinguishing agent for the empty, sealed compartment without a fire and for the loaded compartment after the can exploded in test 2. The concentration in the graphs is the average of the two sampling ports.

Test 6 shows that should a can rupture after halon discharge, due to a smoldering fire for example, the halon would prevent the ignition of the escaping propellant. Figures 8 shows the rupture of the aerosol can during test 6.

In test 7 the can was heated in the same manner as test 6 but halon was not used. The can ruptured and the contents ignited in a fireball. The ignition point was near the can and not at the location of the oil burner electrodes. Figure 9 shows the rupture and ignition of the can in test 7. This test demonstrated that an external ignition source is not needed to ignite the propellant; the heat from the ruptured can was sufficient to ignite the contents.

CONCLUSIONS

1. The use of hydrocarbon propellants in aerosol cans increases the damage potential of luggage fires in aircraft cargo compartments.

2. Aerosol cans ruptured and ignited in a buring suitcase in a simulated Class D cargo compartment in tests 3, 4, and 5. In those tests the the cargo liners separated from the fasteners and the fires were not contained.

3. Class C cargo compartments provide significantly more protection against fires involving aerosol cans than Class D cargo compartments.

4. An aerosol can rupturing and igniting in a Class C or Class D cargo compartment would eliminate the ability of the compartment to control ventilation and drafts.

5. Aerosol cans would be exposed to elevated temperatures for a longer period of time in a luggage fire in a Class D compartment than in a Class C compartment due to the amount of time it takes for oxygen starvation to suppress a luggage fire. This increases the likelihood that an aerosol can would rupture and ignite in a Class D compartment.

REFERENCES

1. Blake, D.R. and Hill, R.G., Fire Containment Characteristics of Aircraft Class D Cargo Compartments, FAA Technical Report No. DOT/FAA/82-156, March 1983.

2. Blake, D.R., Suppression and Control of Class C Cargo Compartment Fires, FAA Technical Report No. DOT/FAA/CT-84/21, Feburary 1985.

TABLE 1. SMOKE DENSITY IN COMPARTMENT

TEST	ALARM TIME (SECS)	SMOKE DENSITY AT ALARM (% LIGHT TRANSMISSION)	DE-ALARM TIME (SECS)	SMOKE DENSITY AT DE-ALARM (% LIGHT TRANSMISSION)
1	71	99	629	47
2	87	93	1065	32
3	25	96	863	60
4	85	96	602	65
5	206	*	**	**
6	173	70	**	**
7	100	99	474	*
8	112	99	**	**
9	99	99	**	**
10	76	99	3460	57
11	59	99	**	**
12	162	90	**	**
13	250	92	**	**
14	119	99	**	**
15	214	62	490	64
16	119	100	2130	53
17	93	96	3430	98
18	178	84	230	26
19	185	66	210	35
20	140	94	180	32
21	10	100	240	72
22	58	99	207	87
23	186	95	270	80
Average	122			

* Smoke meter data not available
** Detectors did not de-alarm

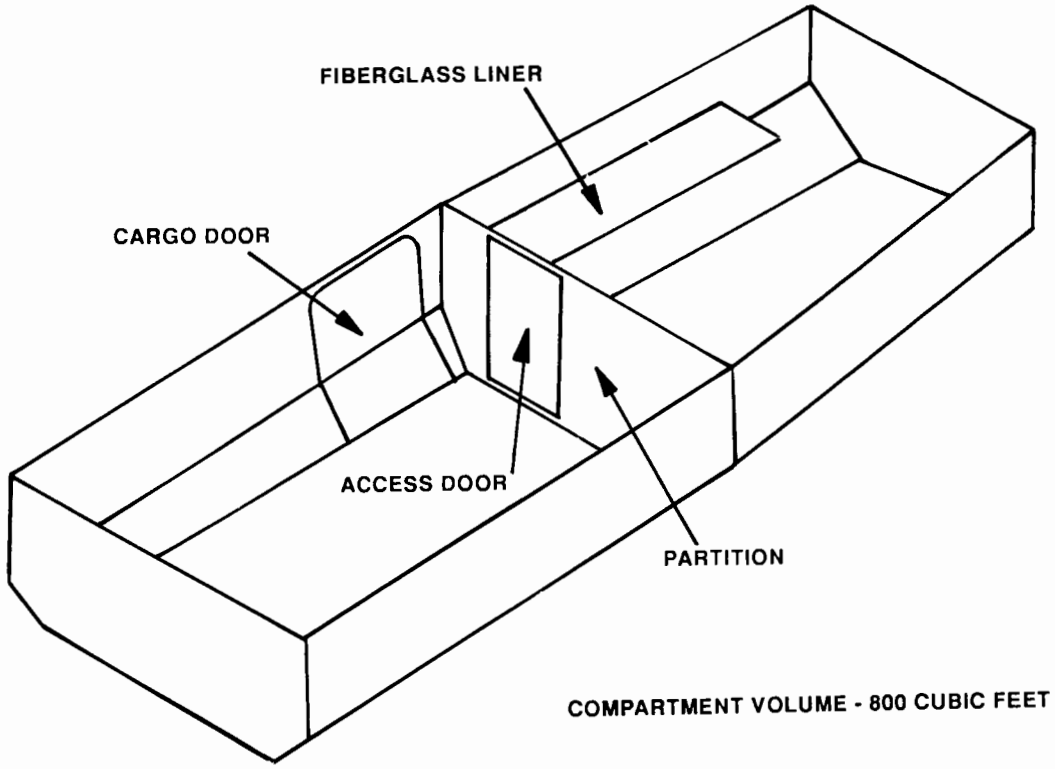

FIGURE 1. TEST ARTICLE

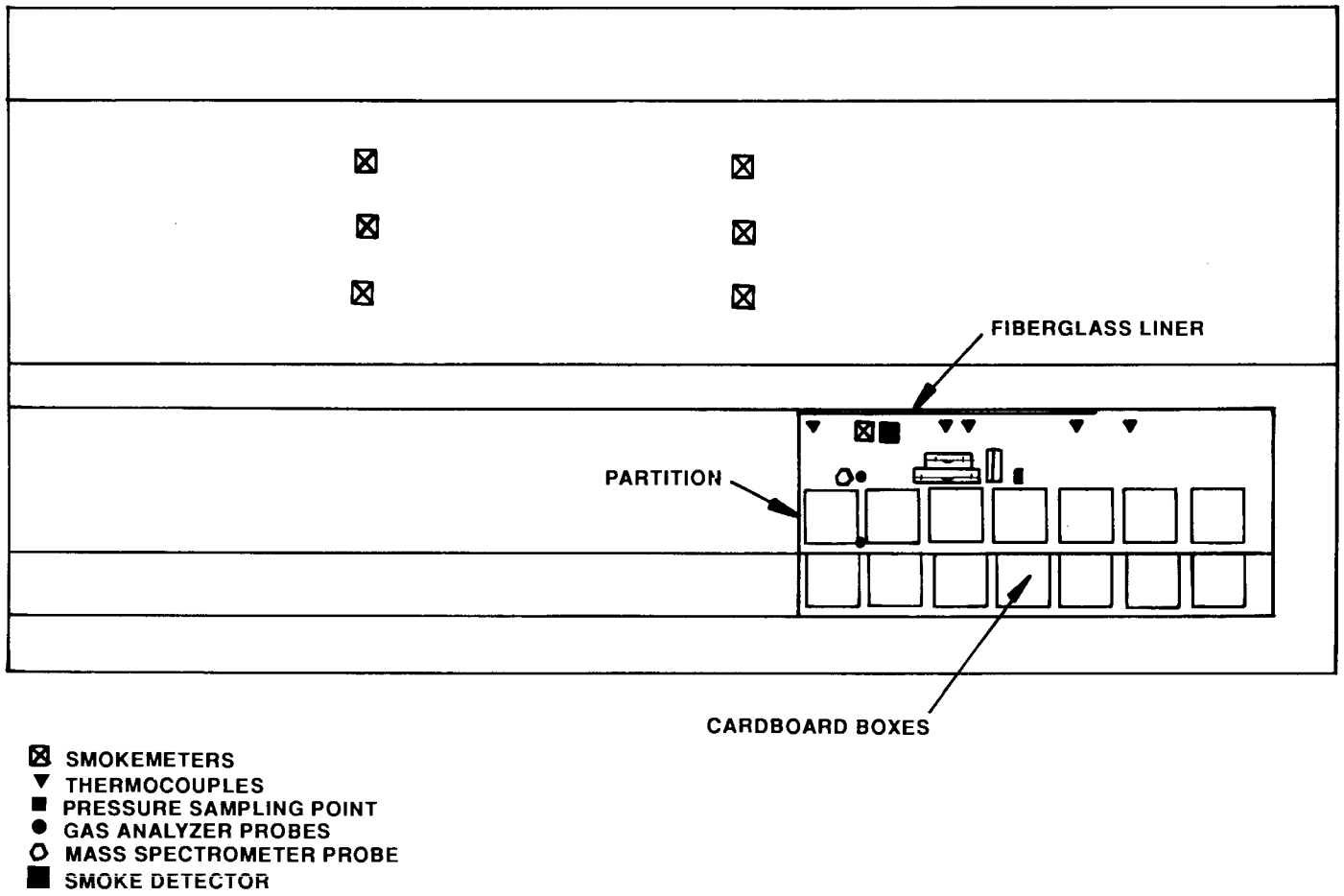

FIGURE 2. INSTRUMENTATION LOCATION - SIDE VIEW

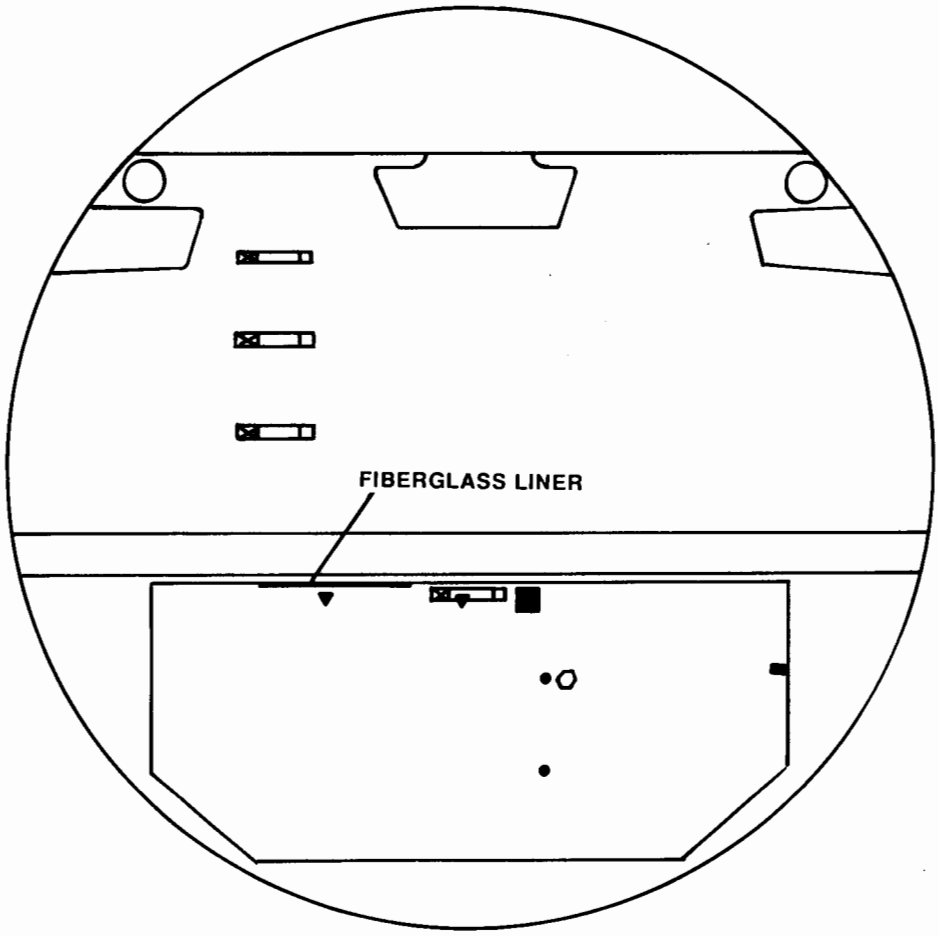

SMOKEMETERS
THERMOCOUPLES
PRESSURE SAMPLING POINT
GAS ANALYZER PROBES
MASS SPECTROMETER PROBE
SMOKE DETECTOR

FIGURE 3. INSTRUMENTATION LOCATION - END VIEW

FIGURE 4. CABIN VIEW OF EXPLODING CAN - TEST 3 (1 of 2 Sheets)

FIGURE 4. CABIN VIEW OF EXPLODING CAN - TEST 3 (2 of 2 Sheets)

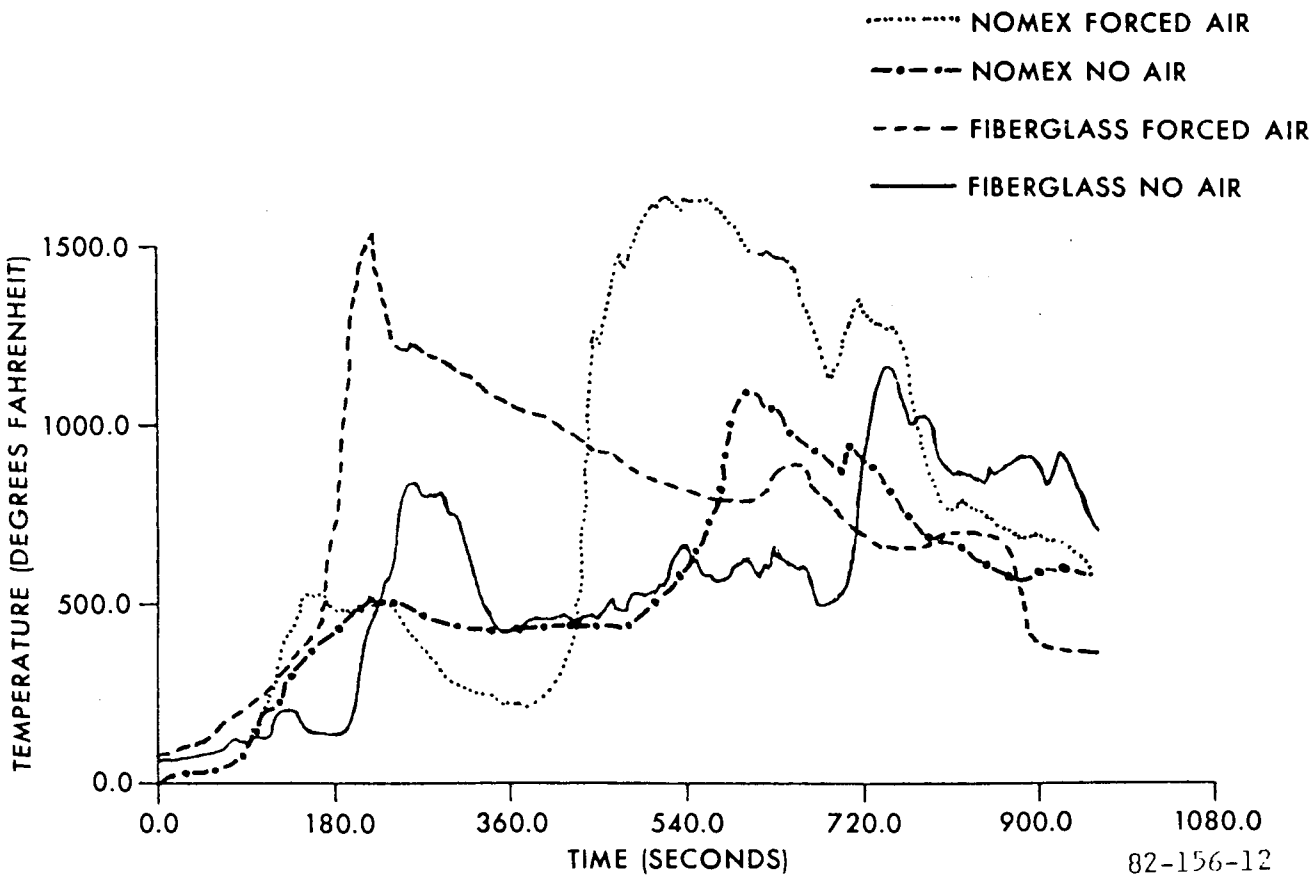

FIGURE 5. BELOW CEILING TEMPERATURES

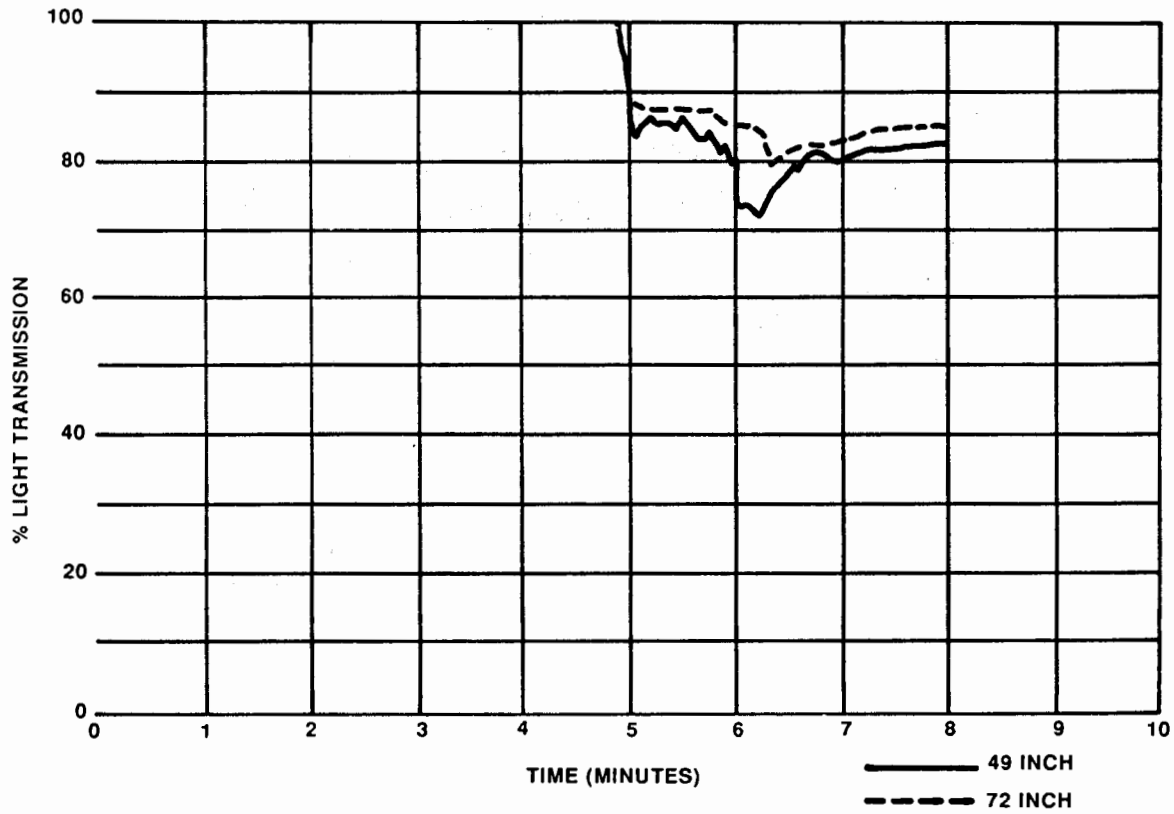

FIGURE 6. MID-CABIN SMOKE - TEST 3

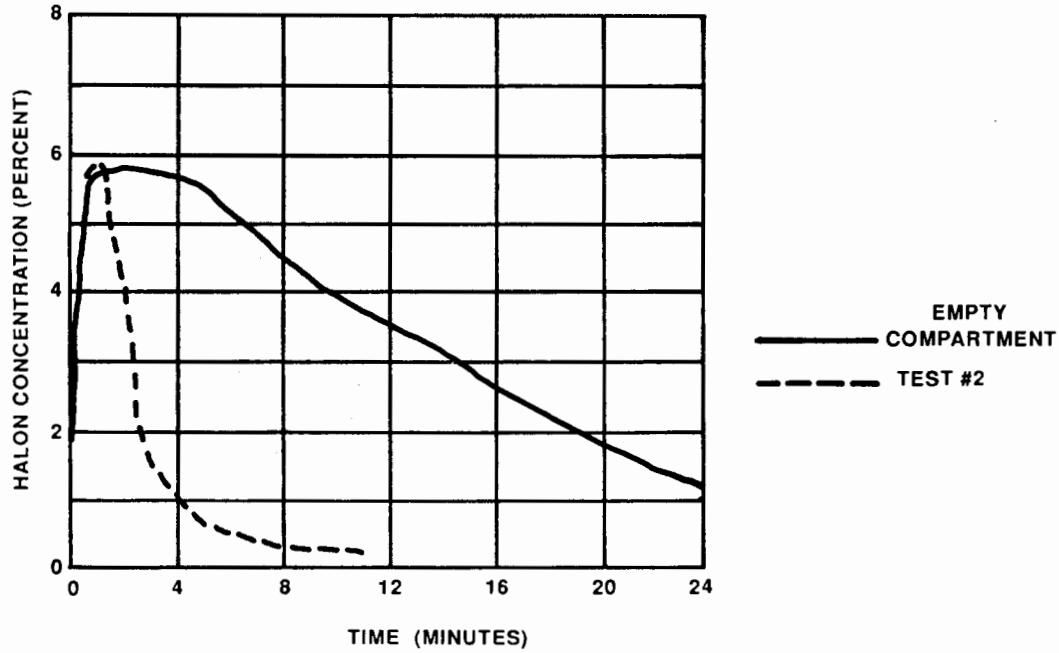

FIGURE 7. HALON CONCENTRATION

FIGURE 8. CAN RUPTURE - TEST 6 (1 of 2 Sheets)

FIGURE 8. CAN RUPTURE - TEST 6 (2 of 2 Sheets)

FIGURE 9. CAN RUPTURE - TEST 7 (1 of 2 Sheets)

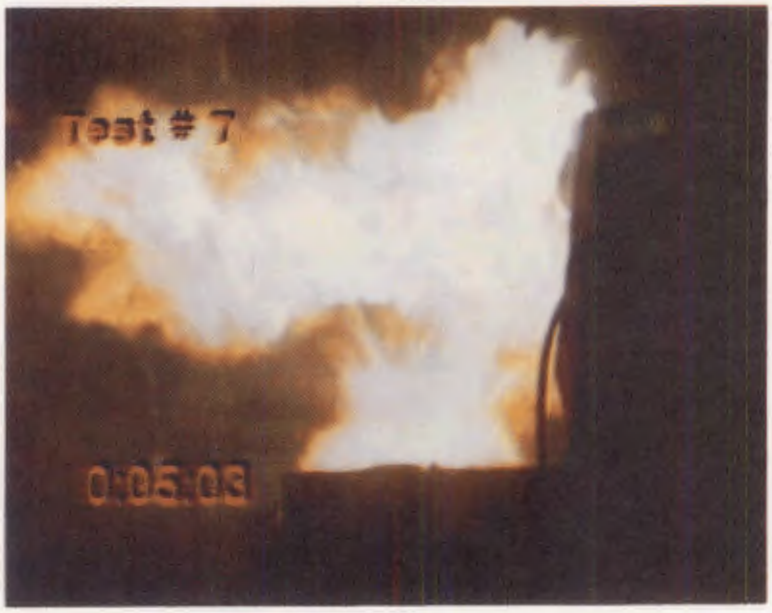

FIGURE 9. CAN RUPTURE - TEST 7 (2 of 2 Sheets)

APPENDIX A

CARGO COMPARTMENT CLASSIFICATION FAR 25.857 CLASSES A THROUGH E

Class A

A Class A cargo or baggage compartment is one in which (1) the presence of fire would be easily discovered by a crew member while at his station; and (2) each part of the compartment is easily accessible in flight.

Class B

A Class B cargo or baggage compartment is one in which (1) there is sufficient access in flight to enable a crew member to effectively reach any part of the compartment with the contents of a hand-held fire extinguisher; and (2) when the access provisions are being used, no hazardous quantity of smoke, flame, or extinguishing agent will enter any compartment occupied by the crew and passengers; (3) there is a separate, approved smoke detector or fire detector system to give warning at the pilot or flight engineer station.

Class C

A Class C cargo or baggage compartment is one not meeting the requirements for either Class A or B compartment but in which (1) there is a separate approved smoke detector or fire detector system to give warning at the pilot or flight engineer station; (2) there is an approved built-in fire extinguishing system controllable from the pilot or flight engineer stations; (3) there are means to exclude hazardous quantities of smoke, flames, or extinguishing agent, from any compartment occupied by the crew or passengers; and (4) there are means to control ventilation and drafts within the compartment so that the extinguishing agent used can control any fires that may start within the compartment.

Class D

A Class D cargo or baggage compartment is one in which (1) a fire occurring in it will be completely confined without endangering the safety of the airplane or the occupants; (2) there are means to exclude hazardous quantities of smoke, flames, or other noxious gases, from any compartment occupied by the crew or passengers; and (3) ventilation and drafts are controlled within each compartment so that any fires likely to occur in the compartment will not progress beyond safe limits; and (4) consideration is given to the effect of heat within the compartment on adjacent critical parts of the airplane.

For compartments of 500 cubic feet or less, an airflow of 1500 cubic feet per hour is acceptable.

Class E

A Class E cargo compartment is one on airplanes used only for the carriage of cargo and in which (1) there is a separate approved smoke or fire detector system to give warning at the pilot or flight engineer station; (2) there are means to shut off the ventilating airflow to, or within, the compartment, and the controls for these are accessible to the flight crew in the crew compartment; (3) there are means to exclude hazardous quantities of smoke, flames, or noxious gasses from the flight crew compartment; and (4) the required crew emergency exits are accessible under any cargo loading condition.