te technical note techn

Electromagnetic Compatibility Tests of 1030/1090 MHz Waveform Environment to Second Generation VORTAC

Ralph J. Yost

OCT 1 1994

TECHNICAL CENTER LIBRARY
ATLANTIC CITY INT'L AIRPORT, NJ 08405

September 1987

DOT/FAA/CT-TN87/15

Document is on file at the Technical Center Library, Atlantic City Airport, N.J. 08405

U.S. Department of Transportation
Federal Aviation Administration

Technical Center
Atlantic City Airport, N.J. 08405

NOTICE

This document is disseminated under the sponsorship of the Department of Transportation in the interest of information exchange. The United States Government assumes no liability for the contents or use thereof.

The United States Government does not endorse products or manufacturers. Trade or manufacturer's names appear herein solely because they are considered essential to the object of this report.

Technical Report Documentation Page

1. Report No.	2. Government Accession No.	3. Recipient's Catalog No.
DOT/FAA/CT-TN87/15		

4. Title and Subtitle	5. Report Date
ELECTROMAGNETIC COMPATIBILITY TESTS OF 1030/1090 MHz WAVEFORM ENVIRONMENT TO SECOND GENERATION VORTAC	September 1987
	6. Performing Organization Code
7. Author(s) Ralph J. Yost	8. Performing Organization Report No. DOT/FAA/CT-TN87/15
9. Performing Organization Name and Address Federal Aviation Administration Technical Center Atlantic City International Airport, New Jersey 08405	10. Work Unit No. (TRAIS)
	11. Contract or Grant No. F1804B
12. Sponsoring Agency Name and Address U.S. Department of Transportation Federal Aviation Administration Technical Center Atlantic City International Airport, New Jersey 08405	13. Type of Report and Period Covered Technical Note
	14. Sponsoring Agency Code

15. Supplementary Notes

16. Abstract

Data were collected relative to the tactical air navigation (TACAN)/distance measuring equipment (DME) beacon ground system to determine the TACAN/DME receiver guardbands required to accommodate Mode S, Traffic Alert and Collision Avoidance System (TCAS), and the Air Traffic Control Radar Beacon System (ATCRBS) signal waveforms. Specifically, this report addresses the impact of Mode S/TCAS waveforms at 1030 megahertz (MHz) and ATCRBS/Mode S waveforms at 1090 MHz on the victim TACAN/DME second generation VORTAC (SGV) ground system. Electromagnetic compatibility (EMC) testing on the victim SGV has not previously been performed.

It was determined that X-mode operation of the SGV requires a frequency guardband of at least 3 MHz from 1030 MHz or at least 6 MHz from 1090 MHz. Further investigation of the performance of the SGV in Y-mode is recommended prior to Y-mode frequency assignments by the Federal Aviation Administration.

17. Key Words	18. Distribution Statement
Second Generation VORTAC (SGV) VORTAC TACAN Distance Measuring Equipment (DME)	Document is on file at the Technical Center Library, Atlantic City International Airport, NJ 08405

19. Security Classif. (of this report)	20. Security Classif. (of this page)	21. No. of Pages	22. Price
Unclassified	Unclassified	56	

Form DOT F 1700.7 (8-72) Reproduction of completed page authorized

TABLE OF CONTENTS

	Page
EXECUTIVE SUMMARY	v
INTRODUCTION	1
Purpose	1
Background	1
DESCRIPTION OF EQUIPMENT	1
ATCRBS General Description	1
Mode S	4
Traffic Alert and Collision Avoidance System	5
TACAN/DME System Overview	6
Second Generation VORTAC DME Receiver	7
SPECIAL TEST EQUIPMENT DESCRIPTION	11
ATCRBS/Mode S Fruit Generator, 1090-MHz Environment	11
Mode S/TCAS Waveform Generator, 1030-MHz Environment	11
DISCUSSION	16
Method of Approach	16
Test Conditions	23
Performance Parameters	24
Data Collection Flow	24
TEST RESULTS AND ANALYSIS	25
Effects Test Results, 1090-MHz Environment	25
Effects Test Results, 1030-MHz Environment	45
SUMMARY	45
CONCLUSIONS	51
REFERENCES	51

LIST OF ILLUSTRATIONS

Figure		Page
1	ATCRBS/Mode S All-Call Interrogations	2
2	ATCRBS Reply Format	3
3	Mode S Interrogation	4
4	Mode S Reply Format	5
5	Frequency Assignment Chart for the TACAN/DME Frequencies	7
6	TACAN Receiver Circuits Functional Block Diagram	9
7	Block Diagram Fruit Generator	12
8	Block Diagram ATCRBS Fruit Reply Generator	13
9	Block Diagram Mode S Fruit Reply Generator	15
10	1030-MHz Environment Simulator	20
11	Hardware Implementation of 83 TCAS Aircraft	21
12	1030/1090 MHz Environment to SGV EMC Test Configuration	22
13	Second Generation VORTAC TACAN EMC Effects from 1090-MHz Waveforms	27
14	Reply Efficiency at Receiver Sensitivity	39
15	Second Generation VORTAC TACAN EMC Effects from 1030-MHz Waveforms	46

LIST OF TABLES

Table		Page
1	Mode S Message Distribution	14
2	Mode S/TCAS Waveform Generator TCAS Output	17
3	Maximum Mode S Sensor Interrogation Rates U.S. National Standard Defined	19
4	Data Output Sheet	26

EXECUTIVE SUMMARY

For the purpose of electromagnetic compatibility testing, beacon performance is best characterized by reply efficiency. The data show that when 1090-MHz Mode S fruit (up to 1k) was injected into the second generation VORTAC (SGV) beacon receiver, the reply efficiency was noticeably degraded until the frequency separation between the tactical air navigation (TACAN) receiver and the Mode S fruit was at least 3 MHz. At delta F=3 MHz, the effect on beacon reply efficiency from 1090-MHz Mode S fruit was negligible.

When up to 40k of 1090-MHz Air Traffic Control Radar Beacon System (ATCRBS) fruit was injected into the beacon receiver, the data show that reply efficiency was comparable to the baseline tests when the frequency separation between the ATCRBS fruit and the beacon receiver was at least 6 MHz. When the fruit rate was lower, reply efficiency was not degraded.

Results of the 1030-MHz tests indicate that beacon reply efficiency is minimally affected even at delta F=0 MHz. However, it was at delta F=3 MHz that reply efficiency performance degradation was negligible in the presence of 1030-MHz waveforms.

INTRODUCTION

PURPOSE.

The purpose of this effort was to collect data from which frequency guardband recommendations could be made for tactical air navigation (TACAN)/distance measuring equipment (DME) beacon ground system receivers. These guardbands are required to accommodate Mode S, Traffic Alert and Collision Avoidance System (TCAS), and the Air Traffic Control Radar Beacon System (ATCRBS) signal waveforms. Specifically, this report addresses the impact of Mode S/TCAS waveforms at 1030 megahertz (MHz) and ATCRBS/Mode S waveforms at 1090 MHz on the TACAN/DME receiver of the second generation very high frequency omnidirectional range (VOR) TACAN (VORTAC) ground system.

BACKGROUND.

The Federal Aviation Administration (FAA) plans to deploy the Mode S system as a replacement for the present ATCRBS and anticipates the deployment of TCAS in the near future. Both systems operate at the same frequencies as the present ATCRBS, i.e., 1030 MHz uplink and 1090 MHz downlink.

The current frequency separation between ATCRBS transmissions and the common TACAN/DME civil/military channels provides some degree of isolation. Because the Mode S system signals use long interrogation and reply signals, phase shift-keying modulation techniques and high chip transmission rates, the effect of these characteristics on TACAN/DME operation need to be investigated. It is also necessary to investigate the effect of TCAS 1030 MHz pulses on TACAN/DME. Electromagnetic compatibility (EMC) testing on the victim second generation VORTAC (SGV) has not previously been performed.

DESCRIPTION OF EQUIPMENT

ATCRBS GENERAL DESCRIPTION.

The ATCRBS is a cooperative system which consists of a ground-based rotating directional antenna, interrogator/receiver, signal processing equipment, and active aircraft transponders. In operation, an interrogation pulse-group is transmitted from the directional antenna and triggers each airborne transponder located in the directional main beam as the antenna rotates or scans by the aircraft. Measurement of the signal round-trip transmit time (the interrogation and reply) determines the range (rho), and the mean direction of the interrogator antenna during aircraft replies determines the azimuth (theta) of the replying aircraft.

The ground-based interrogations are rigidly controlled radio frequency (RF) pulse groups (code trains) transmitted by the ground equipment (on 1030 MHz) to interrogate all aircraft within the area of coverage. Upon interrogation, the aircraft transponder transmits a coded pulse train reply on a different frequency (1090 MHz). This reply contains the aircraft identity selected by the pilot or, when the aircraft is properly equipped, the aircraft altitude. The ground-based

equipment can then automatically decode the information and determine the aircraft range, azimuth, identity, and altitude. Discrete aircraft emergency codes are also provided in the ATCRBS.

ATCRBS GROUND INTERROGATION. The basic interrogation consists of pulse pairs (P1 and P3) which are transmitted at a repetition rate of several hundred pairs per second by the rotating directional antenna. These pulses are nominally of equal amplitude and are separated by time intervals dependent on the mode of interrogation (see figure 1). The primary modes of interest are mode 3/A (identity) and mode C (altitude). Other modes, such as mode 4, are not used in the civil air traffic control (ATC) system and will not be considered. The time interval (between P1 and P3 in mode 3/A) is 8 microseconds (μsec). The aircraft transponder decodes this time interval as an "identity" interrogation and responds with the aircraft beacon code selected by the pilot. A time interval of 21 μsec between P1 and P3 is decoded as an altitude interrogation (mode C) which requests the transponder to reply with the aircraft's barometric altitude.

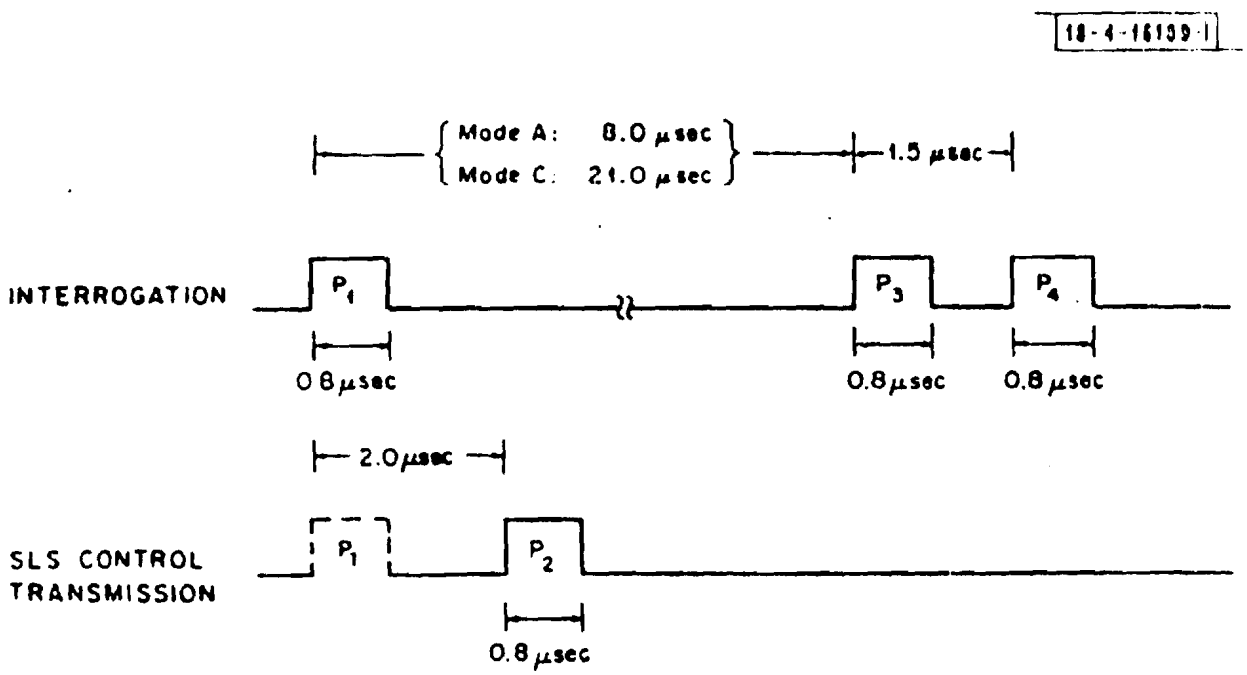

FIGURE 1. ATCRBS/MODE S ALL-CALL INTERROGATIONS

ATCRBS AIRBORNE REPLY. Upon proper interrogation, the airborne transponder generates and transmits a reply pulse train encoded with either the aircraft's identity or pressure altitude, depending on the mode of interrogation. The reply consists of two framing pulses (F1 and F2) spaced 20.3 μsec apart; twelve data pulses and one special purpose pulse position (X pulse), all spaced in increments of 1.45 μsec from the first framing pulse; and one special position identification (SPI) pulse spaced 4.35 μsec after the F2 framing pulse. The reply pulse train is shown in figure 2 and is 20.3 μsec in duration between F1 and F2 for either mode of interrogation.

In the case of mode 3/A interrogations aircraft identity is encoded in the A B C D pulses (figure 2) providing a capability of 4,096 discrete codes. For Mode C, the aircraft altitude is encoded (gray code) in these same A B C D pulses, providing altitude capability from -1000 feet to +126,700 feet in 100-foot increments.

The X pulse position indicated in the reply in figure 2 is used exclusively by the military in this country. The SPI pulse is the "ident" pulse transmitted upon request of the air traffic controller in mode 3/A only. This results in special indications on the air traffic controller's display which identifies the particular aircraft responding to the ident request. (See references 1 to 4 for more detailed information pertaining to ATCRBS operation, performance, and requirements.)

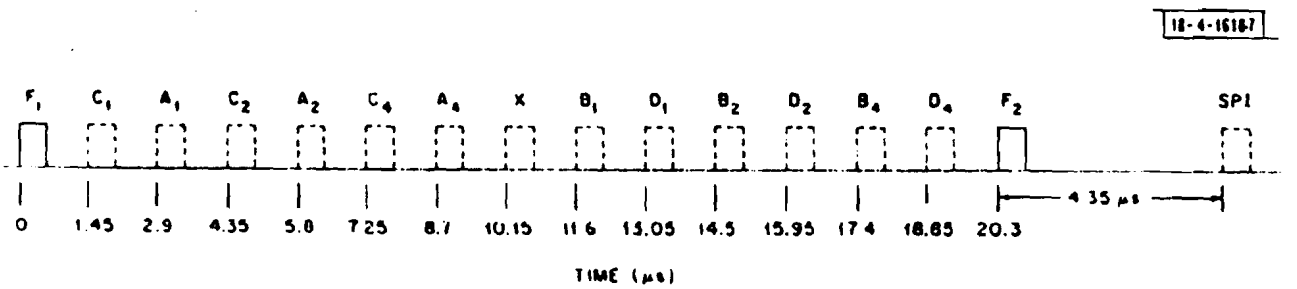

FIGURE 2. ATCRBS REPLY FORMAT

MODE S.

Mode S is a discrete addressing air traffic surveillance system that provides improved surveillance data and an integral ground-air-ground digital communications data link. Mode S is compatible with the present ATCRBS.

Uplink interrogations are on a frequency of 1030 MHz. The interrogations are two basic types consisting of (1) the present pulse-amplitude modulation (PAM) mode 3/A and C ATCRBS waveforms with the addition of a P4 pulse after the normal P3 pulse (ATCRBS/Mode S all-call, figure 1), and (2) a discrete interrogation consisting of PAM P1 and P2 pulses followed by a data field of 16.25 or 30.25 μsec (see figure 3). The information in the data field is in the form of differential phase-shift keying (DPSK) modulation at a 4-megabit pulse-per-second data rate.

Downlink replies are at 1090 MHz. The replies are either the present PAM ATCRBS reply waveforms or the Mode S waveforms. The ATCRBS replies are the normal 12-bit reply field; the Mode S replies consist of a PAM 4-pulse preamble followed by a data field of 56 or 112 μsec. The data in the data field are in the pulse position modulation (PPM) format at a 1-megabit-per-second data rate.

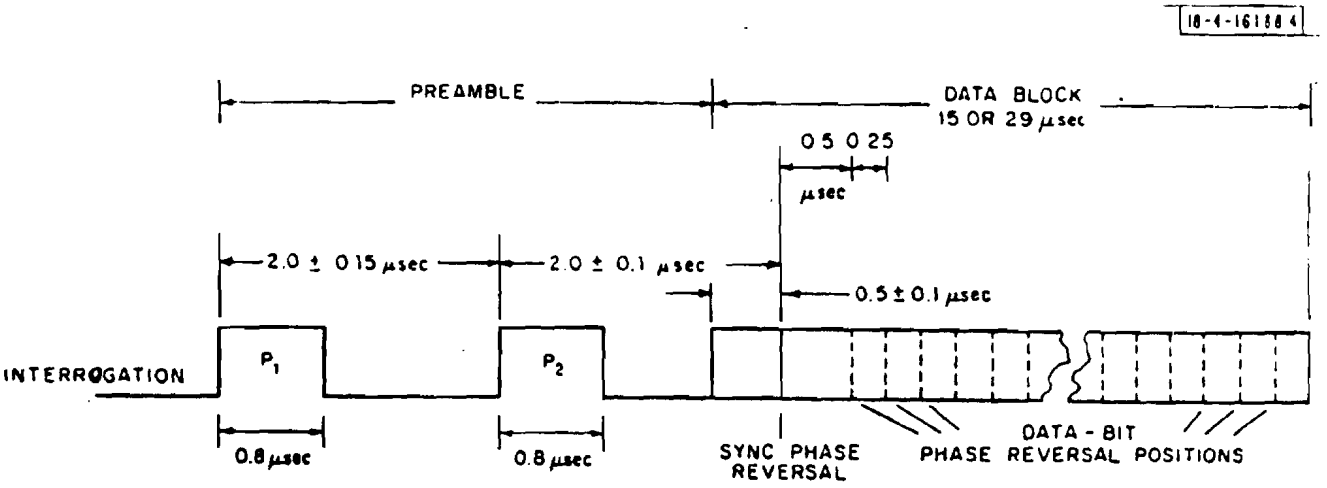

FIGURE 3. MODE S INTERROGATION

TRAFFIC ALERT AND COLLISION AVOIDANCE SYSTEM.

The TCAS is an airborne collision avoidance system which can operate compatibly with ATCRBS and Mode S.

This system transmits on 1030 MHz and has the two basic types of interrogations: (1) the present PAM mode C ATCRBS waveform with the additional P4 pulse after the normal P3 pulse (figure 1), and (2) a Mode S interrogation consisting of PAM P1 and P2 pulses followed by a data field of 15 or 29 μsec time duration (figure 3). The information in the data field is in the form of DPSK modulation at a 4-megabit pulse-per-second data rate.

Replies are received at 1090 MHz. The replies are the present PAM ATCRBS reply waveforms and the discrete address waveforms. The ATCRBS replies are the normal 12-bit reply field (figure 2); Mode S replies consist of a PAM 4-pulse preamble followed by a data field of 56 or 112 μsec (figure 4). The information in the data field is in the PPM form at a 1-megabit-per-second data rate.

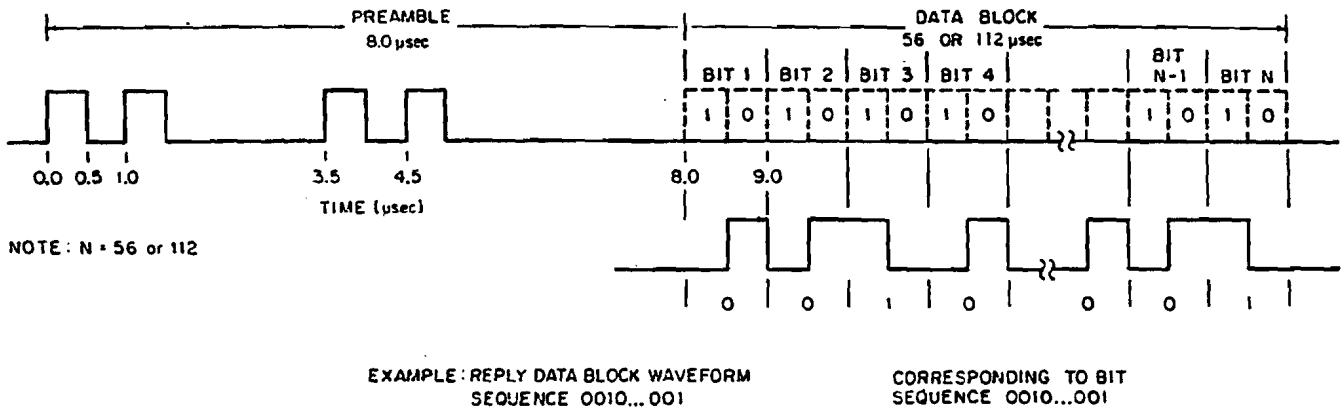

FIGURE 4. MODE S REPLY FORMAT

TACAN/DME SYSTEM OVERVIEW.

VORTAC. The primary en route navigation system used within the continental United States is VOR/DME. The VOR (VHF omnidirectional range) provides the azimuth relative to the VOR ground station, while DME furnishes a measurement of distance from the aircraft to the DME ground station. In most cases, VOR and DME are collocated as a VOR/DME facility. VOR operates in the 108-117.95 MHz band, while DME operates in the 960-1215 MHz band. TACAN is a combination of omnibearing and distance-measuring functions. Because TACAN is a military system, the azimuth portion of a TACAN facility is not widely used by nonmilitary users. The distance-measuring function of TACAN, however, is a DME and is therefore accessible to anyone with a DME interrogator. So that both military and civil aircraft can navigate using the same airway network, TACAN facilities are collocated with VOR facilities. A VOR collocated with a TACAN is classified as a VORTAC.

TACAN/DME operation requires an interrogator in the aircraft and a transponder (beacon) on the ground. The TACAN interrogator calculates a bearing and a range based on reference signals transmitted by the ground station. The DME interrogator calculates only the slant range with respect to the ground station. Slant range is obtained by interrogating the transponder which receives and decodes each interrogation (a pulse pair with proper spacing) and then transmits a reply (also a pulse pair with proper spacing). The interrogator receives the reply and determines the distance, based on the time between transmission of the interrogation and the reception of the reply (minus the transponder's fixed time delay).

TACAN/DME CHANNEL ASSIGNMENTS. Frequencies at 1-MHz increments in the 960-1215 MHz band are used in airborne interrogators and ground transponder equipments of the TACAN/DME systems. TACAN and DME frequencies are designated on aeronautical charts by channel numbers 1-126. Figure 5 is a frequency assignment chart for the TACAN/DME frequencies. TACAN channels are paired with VOR or instrument landing system (ILS) localizer frequencies in the 108-118 MHz band. This pairing arrangement facilitates the employment of a VOR in conjunction with a TACAN/DME transponder to provide a VORTAC facility to provide simultaneous azimuth and range information to civil aircraft.

TACAN channels 17-59 and 70-126 are designated for use in the National Airspace System. Most of these TACAN channels are used by the Federal Aviation Administration (FAA) to provide air navigation services. TACAN channels 1-16 and 60-69 are designated for the military services and are not used by civil aviation.

TACAN channels designated X-mode use a pulse pair spacing of 12 μsec for both the ground-to-air (G/A) and the air-to-ground (A/G) frequencies. TACAN channels designated Y-mode use a G/A pulse pair spacing of 30 μsec and an A/G pulse pair spacing of 36 μsec. Figure 5 shows which channels are assigned to military and civil use with the corresponding G/A and A/G frequencies along with the corresponding VORTAC/ILS very high frequency (VHF) pairs.

Figure 5 also shows that the closest A/G assigned frequency to the 1090 MHz frequency of the ATCRBS/Mode S downlink signals is, in fact, 1090 MHz. Military TACAN channel 66X and 66Y are assigned an A/G frequency of 1090 MHz (64X = 1088 MHz, 65X = 1089 MHz, 66X = 1090 MHz, etc.). Thus, a ground TACAN transponder assigned to operate on 66X or 66Y would have its receiver tuned to 1090 MHz.

Also note from figure 5, the closest civil A/G frequency to 1090 MHz is 1094 MHz. Thus, a ground TACAN transponder assigned to operate on channel 70X or 70Y would have its receiver tuned to 1094 MHz.

The closest A/G assigned frequency to the 1030 MHz frequency of the Mode S/TCAS waveforms signals is, in fact, 1030 MHz. Military TACAN channel 6X and 6Y would have its receiver tuned to 1030 MHz.

The closest civil A/G frequency to 1030 MHz is 1041 MHz. A ground TACAN transponder assigned to operate on 17X or 17Y would have its receiver tuned to 1041 MHz.

Assignment	Military	Civil	Military	Military	Civil	Military	Civil	Military	Military	Civil
Channel	1X-16X	17X-59X	60X-63X	64Y-69Y	70Y-126Y	1Y-16Y	17Y-59Y	60Y-63Y	64X-69X	70X-1267X
G/A Frequency (MHz)	962-977	978-1020	1021-1024	1025-1030	1031-1087	1088-1103	1104-1146	1147-1150	1151-1156	1157-1213
A/G Frequency (MHz)	1025-1040	1041-1083	1084-1087	1088-1093	1094-1150	1025-1040	1041-1083	1084-1087	1088-1093	1094-1150
Number of Frequencies	16	43	4	6	57	16	43	4	6	57
VORTAC/ILS VHF Frequency	--	108.00-112.20	--	--	112.35-117.95	--	108.05-112.25	--	--	112.30-117.90

FIGURE 5. FREQUENCY ASSIGNMENT CHART FOR THE TACAN/DME FREQUENCIES

SECOND GENERATION VORTAC DME RECEIVER.

The ground TACAN/DME transponder that was subjected to the ATCRBS/Mode S 1090-MHz waveforms and the Mode S/TCAS 1030-MHz waveforms was the SGV TACAN. The SGV is the major FAA TACAN ground station located in the VORTACs in the National Airspace System. Because the SGV TACAN/DME was the tested victim, explanation of only the receiver operation is sufficient for the reader to understand its operation and how it was tested.

See figure 6 for receiver circuit overview. As shown, interrogation pulse pairs at the correct RF are received from the TACAN or DME antenna and pass through the antenna switch (S1), directional coupler (DC1), lowpass filter (FL1), and preselector (FL2) to the input of the preamplifier mixer (A12). The directional coupler, following the RF antenna switch, couples interrogation/test signals from the monitor into the preamplifier-mixer via the lowpass filter. It also provides transmitted signals to the monitor detectors and to the modulation controller. The circulator (HY1) provides isolation to prevent transmitted RF energy from the power amplifier output from passing into the receiver. The preselector FL2 rejects unwanted, out-of-tune frequencies while allowing only on-tune RF energy to pass, and it is tunable to the selected operating frequency of the receiver.

The output of the preselector is amplified and mixed with a local oscillator signal from the frequency synthesizer to produce a 63-MHz intermediate frequency (IF) signal. The 63-MHz output of the preamplifier-mixer is routed to the receiver IF section. The first IF amplifier is a log amplifier that detects and amplifies input signals to produce a wideband output (3.5 MHz) which provides an accurate logarithmic response to each received interrogation. The log video output of the first IF amplifier is supplied to the video processor. A second output of the first IF amplifier is supplied to the second IF amplifier where the signal is mixed to produce a second IF signal of 8.75 MHz. This signal is detected in a narrow-band Ferris discriminator to produce a gating video output signal which is also supplied to the video processor. The second IF amplifier also contains an adjusted automatic gain reduction (AGR) circuit to control the gain of the first IF amplifier. The AGR responds to traffic overload and continuous wave (CW) rejection, and is only activated when this occurs.

The video processor references all timing and system delays to the 6-decibel point on the first pulse of a pulse pair. The video processor also includes echo suppression circuits in which an echo-suppression gate is generated upon decoding of a high-amplitude pulse pair. The signal amplitude threshold (at which echo decoding occurs) and the gate width are set at the system facility central processing unit (FCPU) console. The effect of this gate is to raise the decoding threshold so that received echoes from the originally received pulse pair are not decoded during the duration of the echo suppression gate.

In the coder/decoder, counters are used to generate the system time delay and the reply pulse spacing. Both azimuth reference bursts and the identity pulses are generated in the coder/decoder. The north and auxiliary azimuth reference bursts are synchronized with the 15- and 135-hertz (Hz) triggers received from the antenna.

The identity code is generated in the TACAN monitor and is synchronized (by a signal from the VOR monitor) with the transmitted VOR identity code. The identity keying envelope is applied to the coder/decoder counter circuits which generate the 1350-Hz pulse pairs and equalization pulses. Ident keying is given top priority over other system functions. Monitor measurements of reply efficiency, squitter rate, and receiver sensitivity are reduced to zero during ident and are thus ignored by the monitor.

The coder/decoder circuits also contain a squitter generator. This circuit uses a counter to control the distribution and repetition rate of the squitter. Counter techniques maintain the transmitter pulse repetition rate due to decoded-pulse-pairs plus squitter to be kept at the required 2700 pulse-pair-per-second rate.

The squitter and replies are added with the proper priority to the azimuth reference bursts and the identity code signals to form the modulation pulse train. The modulation pulse train from the coder/decoder is then supplied to the modulation controller circuits which shape the modulation signal and control the RF drive signal to the intermediate power amplifier.

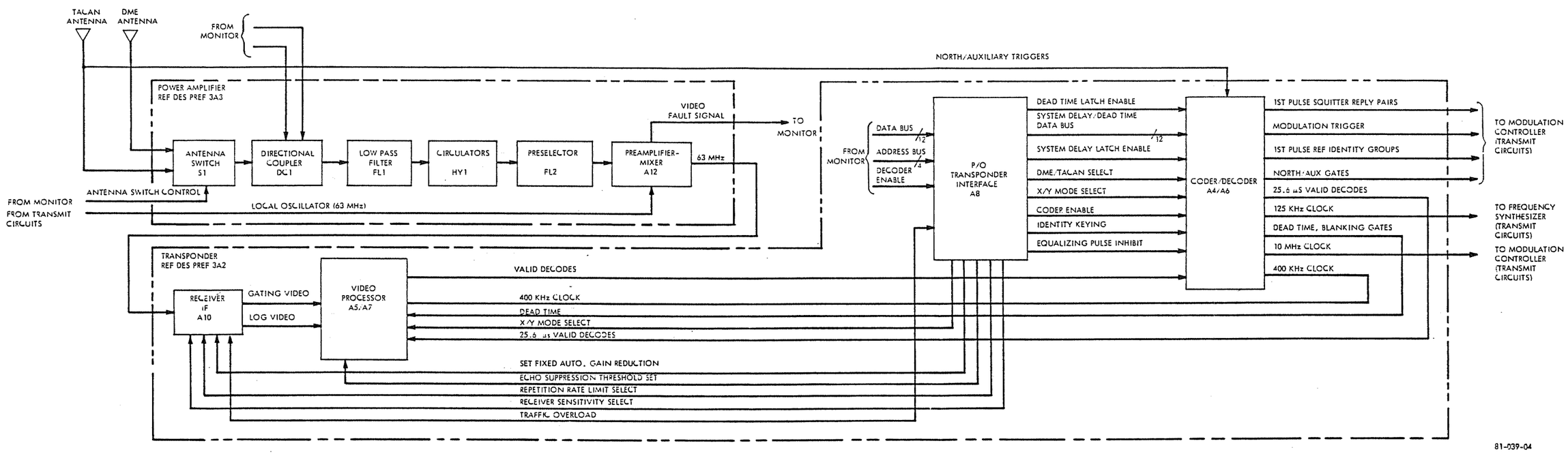

FIGURE 6. TACAN RECEIVER CIRCUITS FUNCTIONAL BLOCK DIAGRAM

SPECIAL TEST EQUIPMENT DESCRIPTION

ATCRBS/MODE S FRUIT GENERATOR, 1090-MHz ENVIRONMENT.

The ATCRBS and Mode S fruit generators were designed and fabricated at the FAA Technical Center. Figure 7 is a block diagram of the generators combined into a single unit.

The ATCRBS fruit generator is capable of generating fruit rates from 0 to 40,000 replies per second in 20 replies-per-second increments. The fruit generator is capable of randomly generating eight different ATCRBS reply codes. The ATCRBS codes are 0737, 7024, 1231, 0541, 7030, 0647, 0567, and 3022. Selection of the desired fruit rate was via keyboard entry. Figure 8 is a block diagram of the ATCRBS fruit reply generator.

The Mode S fruit generator is capable of generating fruit rates from 0 to 1000 replies per second in 4 replies-per-second increments. Selection of the percentage of extended-length Mode S message replies (112 μsec), short Mode S message replies (56 μsec), and the percentage mixture of the selected codes are programmable. Table 1 shows the code content of the Mode S reply and the frequency of occurrence expressed as a percent. Selection of the desired fruit rate is via keyboard entry. Figure 9 shows a block diagram of the Mode S fruit reply generator.

For both fruit generators, the time and amplitude distributions of the fruit replies are randomly selected. Amplitude distributions vary from -47 to -77 decibels above 1 milliwatt (dBm). Time distributions are appropriate for the fruit rate selected.

The output of these generators are appropriately modulated (pulse amplitude for ATCRBS and pulse position for Mode S). A separate variable frequency L-band RF generator is used for each fruit generator, to provide noncoherent frequencies.

MODE S/TCAS WAVEFORM GENERATOR, 1030-MHz ENVIRONMENT.

The TCAS portion of the Mode S/TCAS generator is capable of eight whisper/shout normal ATCRBS interrogations per second for 83 aircraft. It can also provide a number of Mode S discrete TCAS interrogations per second for the same 83 aircraft.

The Mode S portion of the Mode S/TCAS generator is capable of providing all interrogations of two Mode S ground sensors. The amplitude of the interrogations is shaped by the normal Mode S antenna pattern. The Mode S portion provides an interrogation rate at 100 percent of the National Standard value in the mainbeam and 40 percent of this same value in the side and back lobes. Both Mode S sources are designed for a 4-second antenna rotation rate. The Mode S/TCAS waveform generator is configured to simulate the signal waveforms and power and pulse densities that would be seen at Long Beach, California, using the standard Los Angeles model. The number of TCAS aircraft (83) represents 11 percent of the Los Angeles model aircraft. One Mode S sensor is located 1 mile from Long Beach, while the other is located 20 decibels down from the 1-mile sensor.

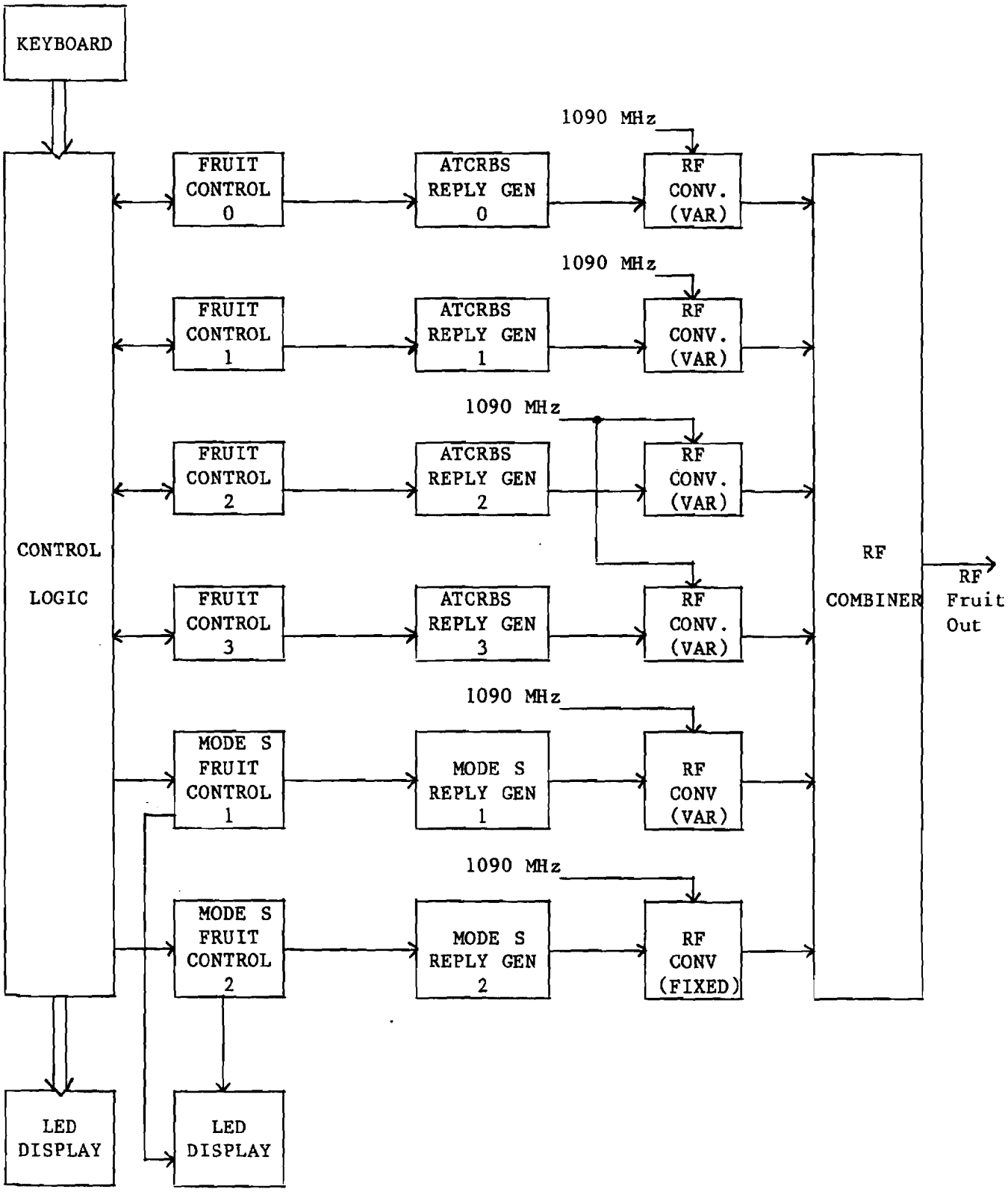

FIGURE 7. BLOCK DIAGRAM FRUIT GENERATOR

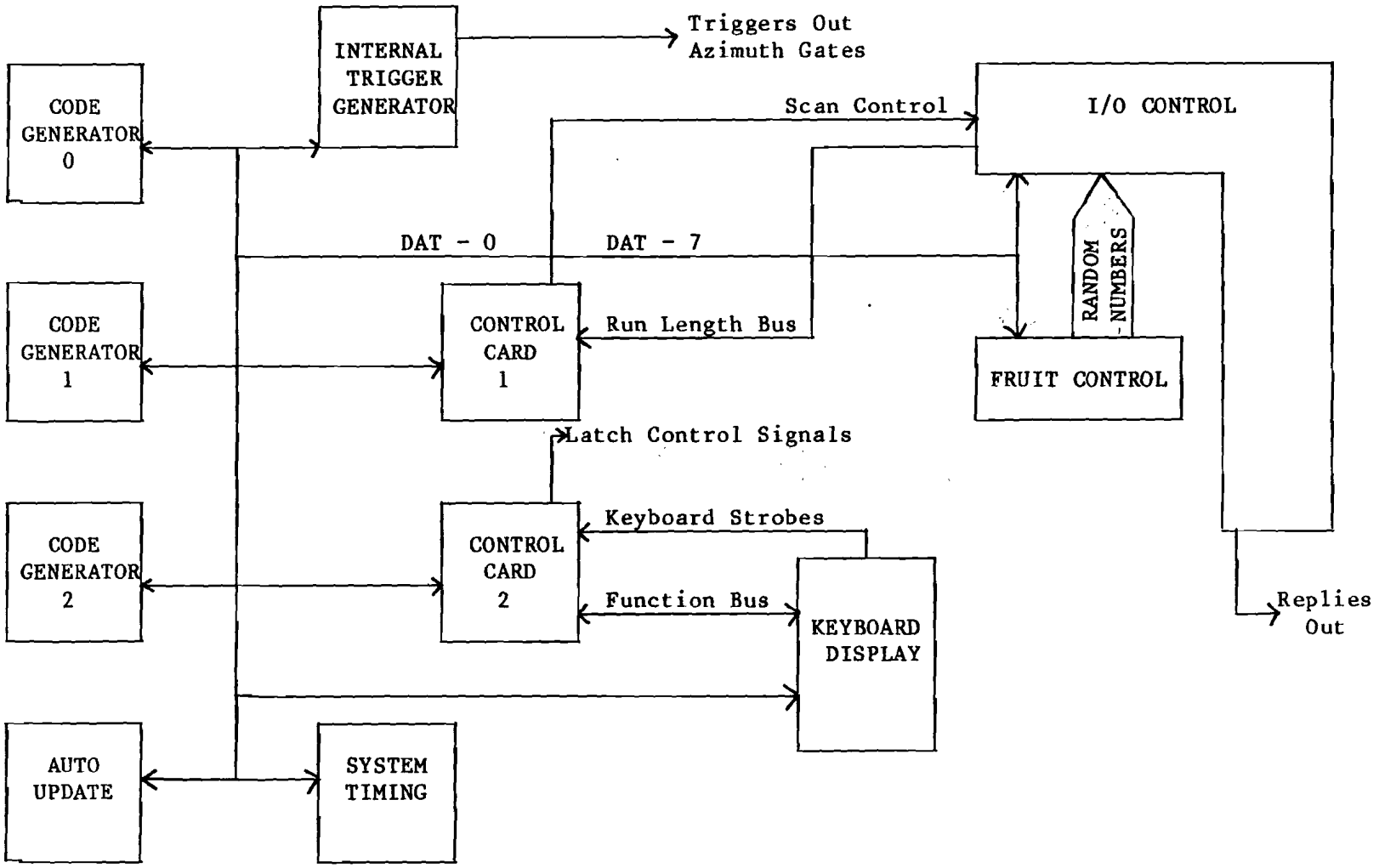

FIGURE 8. BLOCK DIAGRAM ATCRBS FRUIT REPLY GENERATOR

TABLE 1. MODE S MESSAGE DISTRIBUTION

	Mode S Message*	Contribution (%)
1.	C54129854576AA	4.7
2.	D2B76C93B7071F	4.7
3.	D194F767E62E5A	4.7
4.	C94EAA98114897	2.3
5.	C62844CC6DIFF3	2.3
6.	C94E96AE868BDB	2.3
7.	00063A0920BF6F	9.4
8.	04031B748EDDA2	11.7
9.	CABC0621F88EC6	9.4
10.	008706C3ACD74F	4.7
11.	D64987A68526F3	4.7
12.	4A1C9AF54D16D7	4.7
13.	8C18FF3562E07F	4.7
14.	A74EAA9878AD9C	4.7
15.	40C4482690626C22862C89F70DC7	4.7
16.	447B3FFD507434C318BD8AB60A0	4.7
17.	CC89CA44AE84296AE694EC086484	3.1
18.	F32936570104880429571 56F037E	3.1
19.	F319431644636490462132C2DA69	4.7
20.	F328411773839490299776A43006	4.7

*Message content listed in hexadecimal

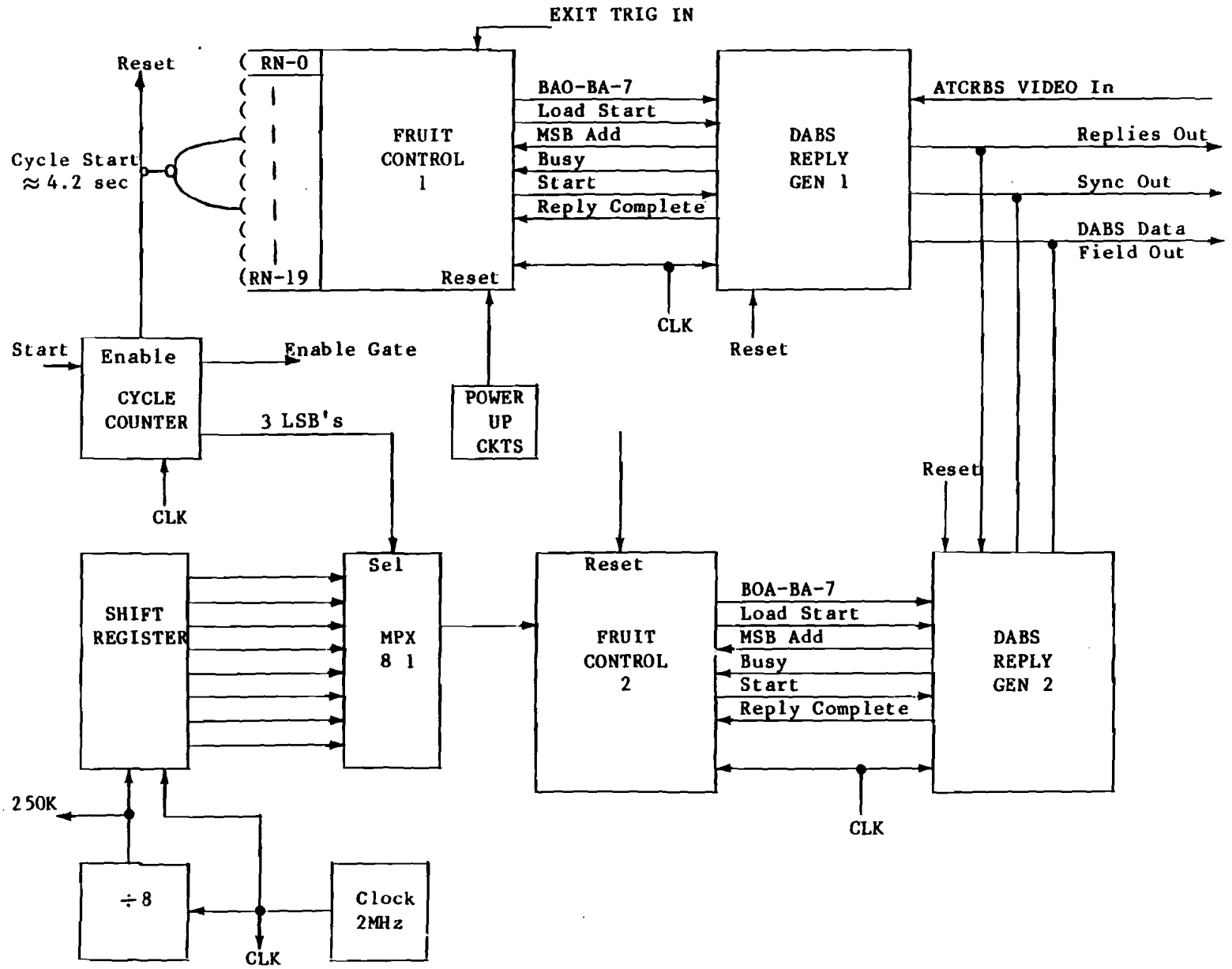

FIGURE 9. BLOCK DIAGRAM MODE S FRUIT REPLY GENERATOR

Table 2 shows the aircraft identification number from the Los Angeles model, the number of Mode S interrogations per second from that aircraft, the time difference between arrival of the Mode S information and the eight whisper/shout sequences from the preceding aircraft on the list, and the actual power level of these interrogations as seen at Long Beach.

Table 3 shows the maximum National Standard Mode S sensor interrogation rates. The waveform generator provides the total number of interrogations and the interrogations per aircraft as seen in table 2.

The 1030-MHz environment was implemented in hardware by using three simulators. A block diagram of the environment source is shown in figure 10. Simulator 1 generates waveforms for 55 TCAS equipped aircraft. Simulator 2 generates waveforms for 28 TCAS aircraft (total of 83) and also generates waveforms for the Mode S sensor that represents approximately 40 percent of the National Standard (Sensor 1). Simulator 3 is dedicated to generating waveforms of the other Mode S sensor that represents about 60 percent of the National Standard (Sensor 2).

The method used to implement the 1030-MHz environment in hardware resulted in splitting up the 83 TCAS aircraft into three portions. Each portion is switch selectable by the operator of the simulator and any combination of switches/TCAS aircraft can be chosen. Switch 1 enables waveforms from 29 TCAS aircraft; switch 2 enables waveforms from 26 TCAS aircraft; switch 3 enables waveforms from 28 TCAS aircraft. These switch selections are commonly referred to as TCAS 1, TCAS 2, and TCAS 3 by the personnel who have worked with the simulator. Figure 11 shows how the TCAS 1, 2, and 3 are divided.

DISCUSSION

The second generation VORTAC DME located in building 196 at the FAA Technical Center was tested. Initially, tests were conducted to insure the proper operation and reliability of the SGV in accordance with the manufacturer's specifications, which exceed FAA specifications. The site manager in charge of the SGV is certified by the FAA in the maintenance and operation of the VORTAC located there.

METHOD OF APPROACH.

Figure 12 shows the test configuration used. The beacon received interrogations from the desired signal source, a Republic Corporation TACAN/DME simulator. The desired signal source was configured to appear to the beacon as an approaching DME equipped aircraft. This was accomplished by varying the RF level from -102 dBm to -60 dBm in 23 steps. Each step resulted in a slightly stronger desired RF level of interrogation. The output of the desired signal source was injected into the antenna line of the beacon receiver while the beacon's transmitter was connected to a dummy load. This insured that no interrogations or other unwanted RF energy could interfere with the test and possibly cause a change in beacon receiver performance. The beacon was interrogated 200 times per second from the desired signal source. The number of interrogations is continuously monitored by a digital frequency counter and recorded.

TABLE 2. MODE S/TCAS WAVEFORM GENERATOR TCAS OUTPUT

Aircraft	Mode S Interrogation	Time (sec)	Amplitude
387	24	33.00	68
403	22	31.50	70
411	23	71.00	68
413	24	37.00	72
417	19	72.00	71
424	9	18.50	73
426	5	17.75	75
427	19	86.50	71
432	18	19.50	72
442	16	35.50	71
445	6	34.50	79
448	3	21.25	82
452	10	24.25	75
457	9	27.50	78
483	9	67.50	76
487	20	25.25	68
489	9	27.25	75
496	19	39.00	69
501	9	13.00	78
502	1	42.00	76
504	16	33.00	72
505	8	23.75	72
508	22	42.25	71
514	9	28.00	78
520	3	10.50	71
525	3	43.00	75
539	7	36.25	78
546	2	23.75	76
549	9	17.25	76
358	9	25.50	71
360	20	30.50	67
365	22	27.00	67
367	13	54.00	73
373	4	27.00	75
374	22	29.75	58
376	0	23.75	75
380	3	29.50	75
556	6	17.00	79
566	8	19.25	76
573	18	41.75	71
588	12	60.75	73
592	2	21.00	73
600	8	33.25	79
602	4	24.00	72
607	6	29.75	79

TABLE 2. MODE S/TCAS WAVEFORM GENERATOR TCAS OUTPUT (Continued)

Aircraft	Mode S Interrogation	Time (sec)	Amplitude
627	14	70.25	75
644	15	30.00	75
665	10	20.25	75
673	12	17.75	73
683	10	46.50	75
690	14	33.25	78
706	12	60.00	78
728	8	55.25	72
729	12	86.25	76
730	12	18.75	68
2	3	17.50	73
10	3	22.75	76
36	7	33.75	73
39	10	38.50	71
59	11	15.75	72
62	18	32.75	67
74	19	37.50	58
76	0	14.00	70
85	2	16.25	67
128	22	43.75	67
152	20	40.00	53
156	0	28.75	71
160	3	46.75	70
169	6	25.00	62
174	1	12.00	66
178	13	44.75	73
193	10	49.25	75
203	21	33.00	71
205	4	36.00	75
211	20	21.75	71
263	6	24.75	73
264	13	15.00	72
275	24	31.25	60
279	17	55.75	71
303	0	16.75	73
168	0	3.00	0
339	14	38.25	71
342	12	43.25	68
348	17	97.50	68

TABLE 3. MAXIMUM MODE S SENSOR INTERROGATION RATES
U.S. NATIONAL STANDARD DEFINED

Scan Angle	Number of Mode S Interrogations for Total Number of Interrogations: Number	Type	Total	Period (sec)
360	700	3 long	2100	4.00
	+160	16 ELM*	2560	
			4660	
90	400	3 long	1200	1.00
	+40	16 ELM	640	
			1840	
3.6	48	2 long	96	0.04

*Extended Length Message

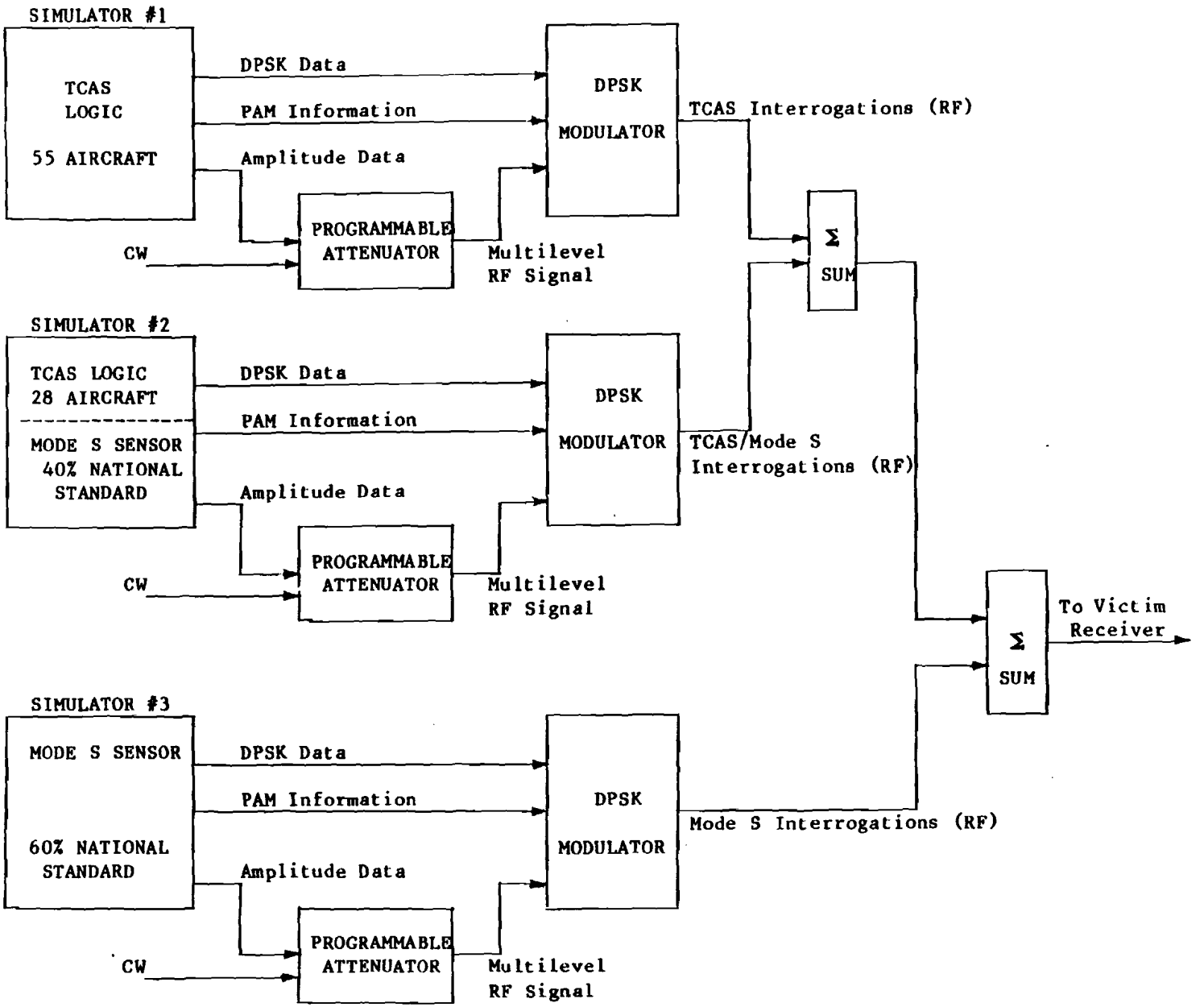

FIGURE 10. 1030-MHz ENVIRONMENT SIMULATOR

SLOTS 1 & 3
TCAS #1

Simulates all Interrogations for 29 Planes

MS3R1	-	Control 1
MS3E1	-	Control 2
MS3V19	-	Amplitude
MS1L1	-	Message Select
MS1J1	-	PAM Timing
MS1L21	-	DPSK

SLOTS 5 & 7
TCAS #2

Simulates all Interrogations for 26 Planes

M1S7R1	-	Control 1
MS7E1	-	Control 2
MS7V19	-	Amplitude
MS5L1	-	Message Select
MS5J1	-	PAM Timing
MS5L21	-	DPSK

SLOTS 9 & 11
TCAS #3

Simulates all Interrogations for 28 Planes

MS11R1	-	Control 1
MS11E1	-	Control 2
MS11V19	-	Amplitude
MS9L1	-	Message Select
MS9J1	-	PAM Timing
MS9L21	-	DPSK

FIGURE 11. HARDWARE IMPLEMENTATION OF 83 TCAS AIRCRAFT

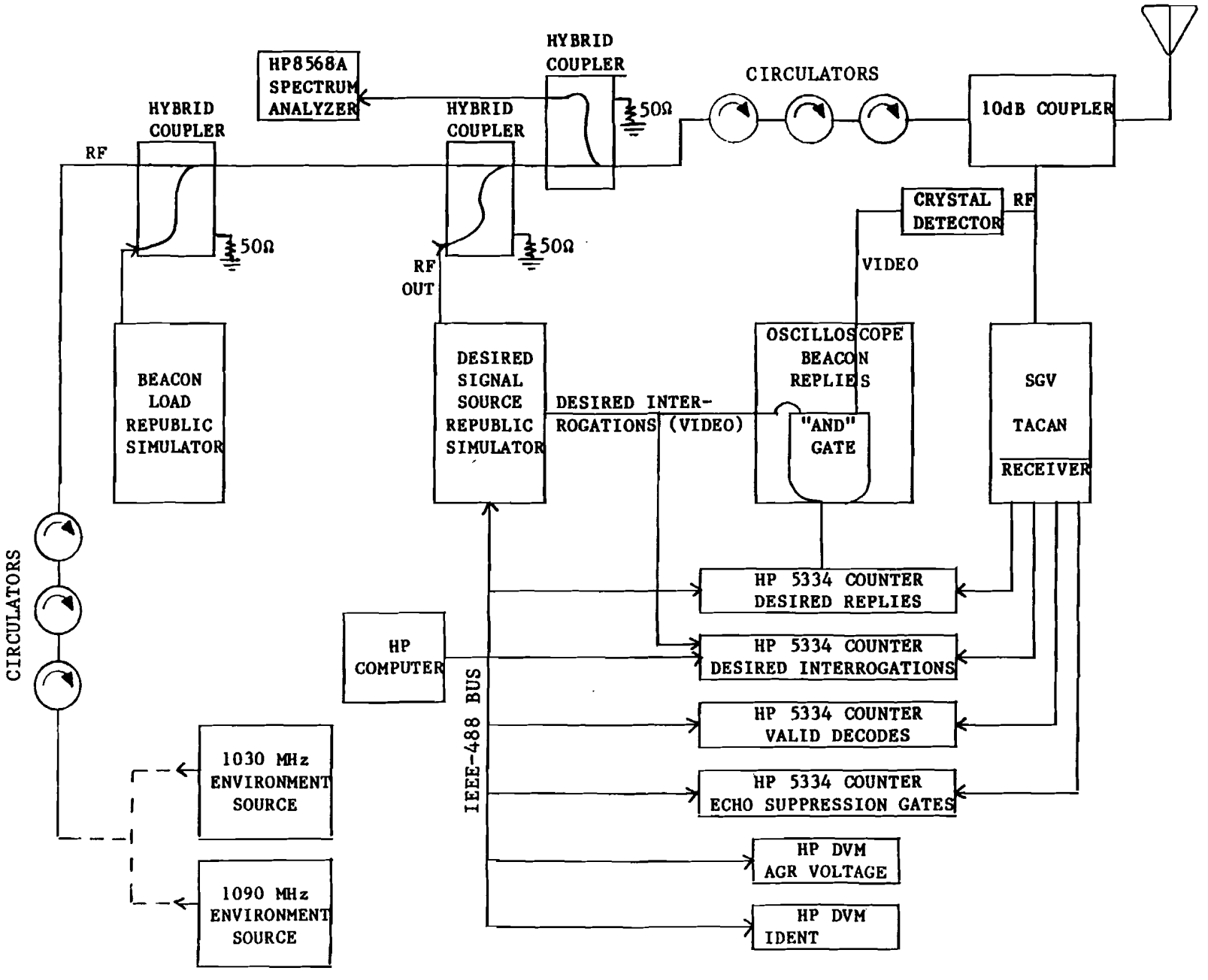

FIGURE 12. 1030/1090 MHz ENVIRONMENT TO SGV EMC TEST CONFIGURATION

The SGV was carefully checked and monitored for proper operation while tests were being conducted. The site manager has the capability to monitor numerous system parameters on a video data display screen. Any of the system parameters of interest could be copied to a printer. During the testing period, records of system performance were printed and kept in a log book.

For most of the tests, the SGV was operated on channel 122X, which resulted in its receiver being tuned to 1146 MHz (only a limited data set was recorded with the SGV in Y-mode, channel 53Y, because the FAA currently does not provide Y-mode channel assignments). Since the 1090- and 1030-MHz environment sources have a variable frequency output, it was decided to maintain the SGV receiver at 1146 MHz and provide the required delta frequency by varying the frequency of the undesired signal sources.

After the SGV was determined to be operating satisfactorily, a baseline test was performed without the undesired signal source in the test configuration. This insured test personnel that the test equipment and the SGV were operating properly together in the test configuration. Baseline tests were repeated on a regular basis.

In order to isolate the replies of the beacon that resulted from the desired signal source (referred to as desired replies), an "AND" gate oscilloscope technique was used. A crystal detector was used to detect the RF replies of the beacon and convert them to video pulses. The detected video replies were then applied to one input of the "AND" gate. A video pulse pair from the desired signal source that was output each time it interrogates was applied to the other input of the "AND" gate. Prior to being input to the "AND" gate, the desired interrogations were delayed 50 μsec in order to be coincident with the desired reply of the beacon. This is because of the fixed 50 μsec reply delay which is characteristic of all TACAN/DME ground beacons operating in X-mode (Y-mode uses 56 μsec delay).

Data collection was accomplished by using a Hewlett-Packard series 300 computer. The computer was used to control the test equipment, collect the data samples, and perform data storage and statistical analysis on the data. Four frequency counters and two digital voltmeters were used and all commonly connected on an IEEE-488 bus line. The first counter recorded the number of desired interrogations, the second recorded desired replies (output of the "AND" gate), the third recorded valid decodes (from the video processor of the receiver), while the fourth counter recorded the number of echo suppression gates (located in the coder/decoder section). One voltmeter recorded the automatic gain reduction (AGR) voltage of the beacon receiver while the second was used to monitor the beacon "ident" signal. The desired signal source was controlled on a separate IEEE-488 bus also connected to the same computer.

TEST CONDITIONS.

Initially, the tests were set up to determine the effect of the 1090-MHz waveforms (ATCRBS and Mode S fruit) with no beacon load, and then tests were conducted to determine the effects of the 1030-MHz waveforms (Mode S sensor/TCAS) with no beacon load.

All data were collected with the echo suppression gate set at a threshold of -70 dbm and set for a duration of 150 μsec. Most of the data were collected on channel 122X, as test time did not allow for an extensive set of Y-mode data to be collected. Additionally, the FAA does not currently operate commissioned ground beacons in Y-mode. The limited tests that were performed in Y-mode indicated a difference in performance characteristics of the SGV, such as lower baseline reply efficiency than that recorded in X-mode. Test time did not allow for enough investigation of this difference.

PERFORMANCE PARAMETERS.

The following beacon performance parameters were recorded throughout the testing:

1. Gain control circuit voltages (e.g., CW rejection and interrogation overload control).

2. Number of desired interrogations (used to determine beacon reply efficiency).

3. Number of valid replies (used to determine beacon reply efficiency).

4. Echo suppression gates (formerly known as retriggerable blanking gates).

The measurement considered most characteristic of beacon performance is reply efficiency. Reply efficiency is the ratio of the number of valid beacon replies to the number of interrogations, expressed in percent.

DATA COLLECTION FLOW.

The data collection software began by first programming the desired signal source for the appropriate configuration. The Republic simulator parameters set were (1) main and auxiliary reference bursts--off, (2) automatic pulse spacer--off, (3) random mode--on, (4) channel--select, (5) select pulse spacing--12 μsec, (6) squitter rate--200/second, (7) reply efficiency--set to 0, modulation--off, and (8) RF level--set. This sequence of commands set up the Republic simulator to appear as an airborne DME interrogator.

Each counter was set up to allow a 1-second gate sample time for each data point. This provided for a frequency count over a 1-second time period. The digital voltmeters were also set up for 1-second samples.

After the desired signal source, counters, and voltmeters were set up, execution of the data collection loop began. Before data samples could be taken, it was necessary to know when the SGV was transmitting "ident." When ident is sent, the system performance parameters in the beacon receiver are given a low priority and the data from them are erroneous. After ident is completed, system parameters return to normal values. Because of the monitoring hierarchy of the SGV, it is not possible to disable the ident. Ident is sent approximately once every 30 seconds and lasts about 4 seconds. This leaves about a 25-second window in which data could be collected. The data collection software would first set the desired signal source to the appropriate RF level, then the computer would continuously poll the ident voltmeter. When the average voltage of the ident test point rose above 0.45 volts direct current (d.c.), ident was on; the computer would wait

4.5 seconds until ident was completed and then poll each counter and voltmeter and record the data from each. Before the 1st, 13th, and 26th sampling of the data bus, the ident loop was executed to be sure no overlap of ident and data sampling occurred.

A total of 30 data samples were taken for each of the 23 RF levels of the desired signal source. The 30 samples were all recorded on a 15-megabyte Winchester hard disk along with the time, descriptive header, and mean and standard deviation of valid decodes, echo suppression gates, AGR voltage, and reply efficiency. A data sheet output sample generated by the data collection software can be seen in table 4.

TEST RESULTS AND ANALYSIS

EFFECTS TEST RESULTS, 1090-MHz ENVIRONMENT.

Shown in figure 13 are plots of beacon reply efficiency under various conditions. The plots show the change in reply efficiency as a function of desired signal level for the various conditions. The dotted line through the 70-percent reply efficiency value highlights the level of reply efficiency the TACAN/DME ground units are to provide to airborne interrogators as specified in the United States National Standard for the VORTAC system dated June 10, 1970, paragraphs 5.2.2 and 5.2.2.1. The two paragraphs referenced essentially state that with no beacon load present, the ground transponder (TACAN or DME) shall reply to an on-channel interrogation which is at a signal level of -92 dbm or greater with a 70-percent reply efficiency.

The legend at the top of each plot indicates the condition of the undesired signal when the data were collected. Each plot contains three or four traces of data, the first being baseline data of reply efficiency with no undesired signal present. All baseline plots are shown with a solid, continuous trace. The trace consisting of one long dash followed by two shorter dashes (——— — —) is plotted to show the highest rate of ATCRBS fruit on that plot. The next lower ATCRBS rate data trace is shown by a series of equally spaced dots (.....). The fourth and last trace (not plotted) is shown by equal size dashes which represent the lowest ATCRBS rate on the plot. The Mode S fruit rate was held constant for each data plot.

Figures 13a and b show the effects of ATCRBS fruit on desired reply efficiency, with no Mode S fruit present, while delta F=0 and no beacon load was present. In examining the various ATCRBS fruit rates in these figures, note the minimal effect that 1k has, while as the fruit rate is increased to 10k, 20k, 30k, and finally 40k, reply efficiency is more noticeably affected.

Compare figures 13c and d to a and b. The only condition different in c and d is the additional 1k of Mode S fruit in combination with the ATCRBS fruit. The same basic trend occurs, that is, reply efficiency degrades as fruit rate increases. At the lower ATCRBS rates, however, the curves appear to be slightly shifted left due to the 1k of Mode S fruit. Take note of the effect on reply efficiency due to only the Mode S fruit, shown in 13c.

TABLE 4. DATA OUTPUT SHEET

Time	Desired Level	Reply Efficiency Mean	Reply Efficiency Std	Echo Gates Mean	Echo Gates Std	Valid Decodes Mean	Valid Decodes Std	AGR Voltage Mean	AGR Voltage Std
9:26:36	-102	21.7	3.0	21	5.5	158	23	.145	0.00
9:29:05	-100	40.4	3.5	22	5.0	207	19	.145	0.00
9:30:35	-99	55.6	3.9	23	4.0	237	21	.145	0.00
9:32:05	-98	69.1	3.1	23	5.3	265	22	.145	0.00
9:33:35	-97	78.8	3.7	23	5.6	287	22	.145	0.00
9:35:05	-96	84.9	2.7	23	5.5	299	24	.145	0.00
9:36:36	-95	86.7	3.5	23	6.2	301	23	.145	0.00
9:38:05	-94	84.8	3.3	22	4.2	299	24	.145	0.00
9:39:35	-93	87.8	3.2	22	6.5	309	19	.145	0.00
9:41:05	-92	86.7	4.5	23	6.5	303	25	.145	0.00
9:42:35	-91	86.4	3.0	23	5.7	303	20	.145	0.00
9:44:05	-90	87.4	3.9	24	5.3	299	29	.145	0.00
9:45:35	-89	86.1	3.3	24	3.7	303	20	.145	0.00
9:47:05	-88	85.2	3.8	22	5.3	303	18	.145	0.00
9:48:35	-87	86.4	3.1	24	4.1	306	20	.145	0.00
9:50:05	-84	86.8	2.9	26	5.0	303	18	.145	0.00
9:51:35	-80	86.4	4.1	27	5.4	307	32	.145	0.00
9:53:05	-76	87.0	3.2	27	4.2	302	17	.145	0.00
9:54:35	-72	87.0	3.2	38	4.4	306	23	.145	0.00
9:56:04	-70	84.6	3.3	192	15.8	296	19	.145	0.00
9:57:34	-68	86.8	3.9	195	17.5	301	19	.145	0.00
9:59:04	-64	86.9	3.5	194	12.7	303	17	.145	0.00
0:00:34	-60	86.6	3.2	194	14.4	303	21	.145	0.00

Beacon test data collected using 1030-MHz environment generator consisting of ATCRBS beacon, Mode S sensor, and TCAS waveforms.

Testing on SGV beacon, FAA Technical Center, January 9, 1987.

Beacon Load = None
TCAS = None
Mode S = None
Baseline = Beacon Channel: 122X (Desired Interrogation Rate = 200)

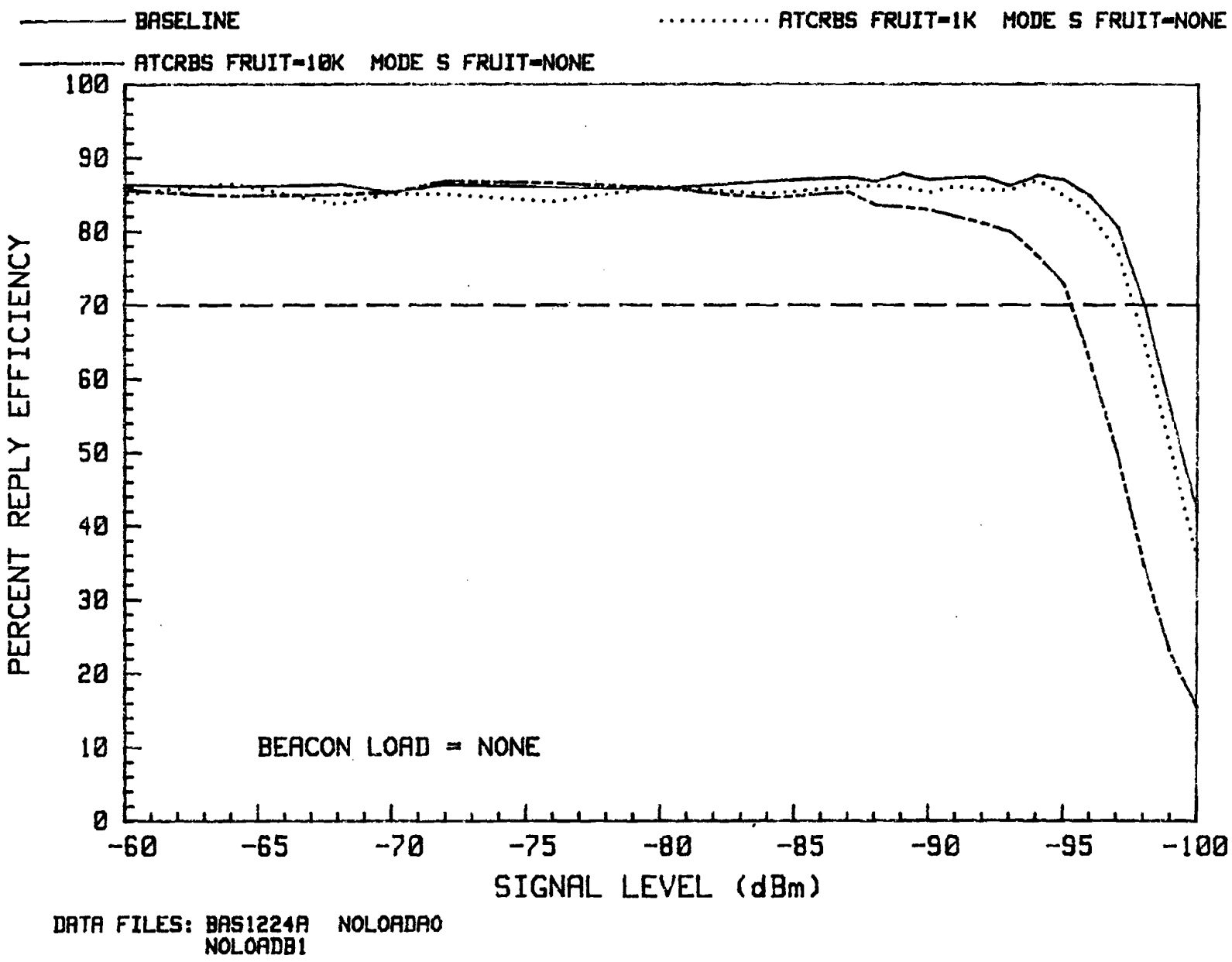

FIGURE 13a. SECOND GENERATION VORTAC TACAN EMC EFFECTS FROM 1090-MHz WAVEFORMS

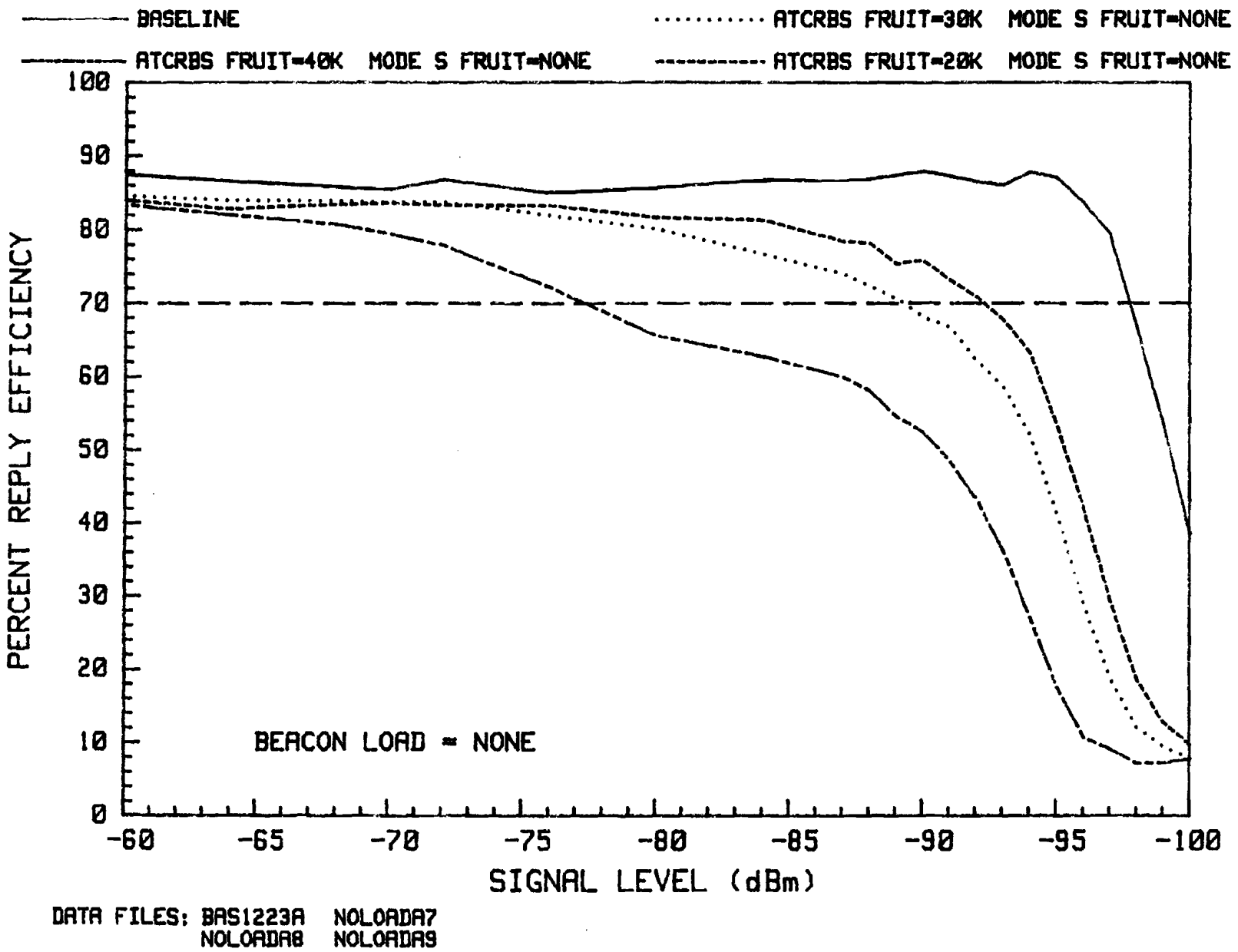

FIGURE 13b. SECOND GENERATION VORTAC TACAN EMC EFFECTS FROM 1090-MHz WAVEFORMS

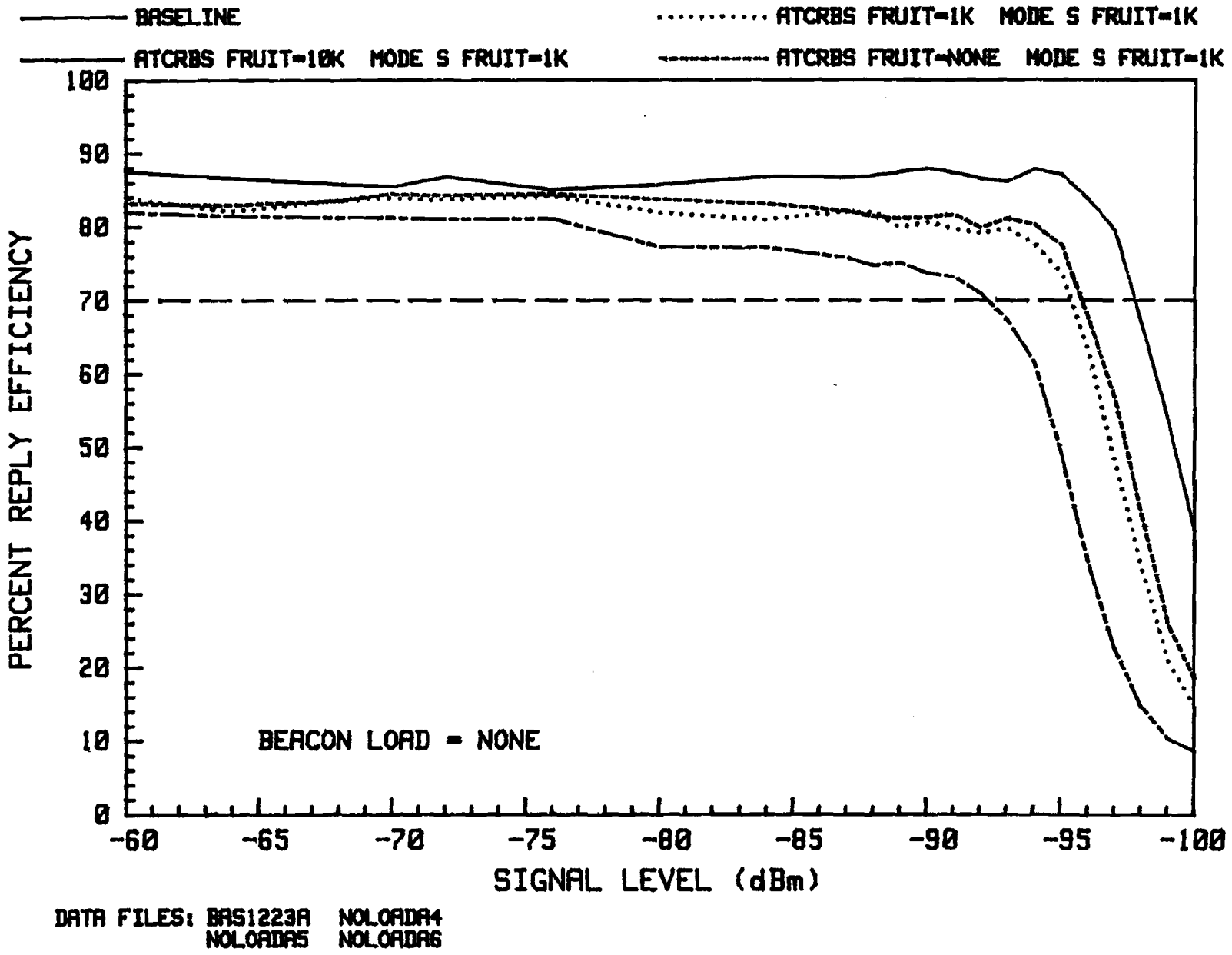

FIGURE 13c. SECOND GENERATION VORTAC TACAN EMC EFFECTS FROM 1090-MHz WAVEFORMS

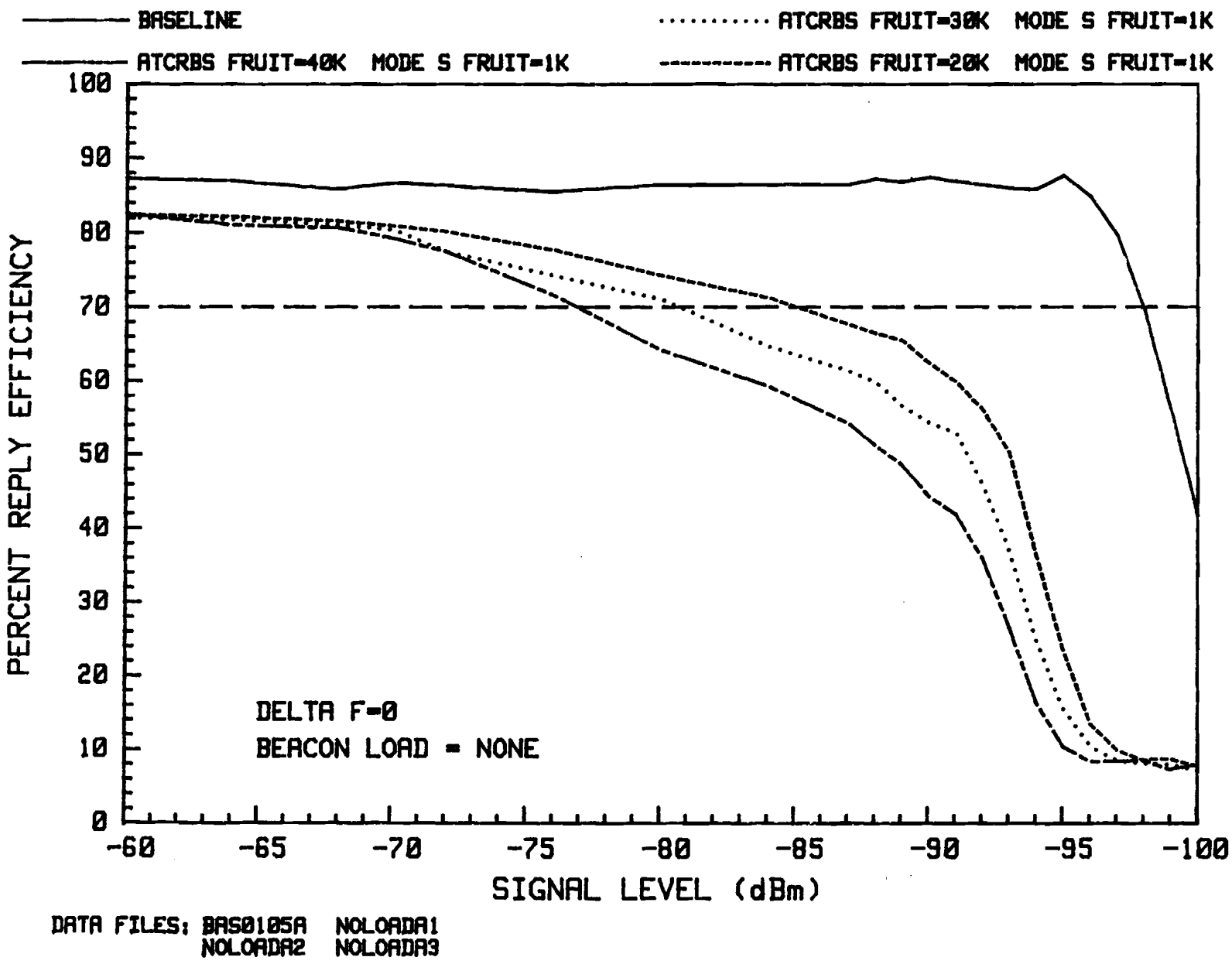

FIGURE 13d. SECOND GENERATION VORTAC TACAN EMC EFFECTS FROM 1090-MHz WAVEFORMS

At delta F=3 MHz, the effect of the 1090-MHz fruit environment is lessened. Figures 13e through h illustrate how the reply efficiency curves more closely resemble that of the baseline curve. The most noticeable effect still occurs at the higher ATCRBS fruit rates, as can be seen by comparing e or g with f or h. Note in particular, on figure 13e, that the plot of data representing 1k of Mode S and NONE of ATCRBS fruit does not shift the curve to the left. These data show that the maximum reply efficiency is slightly reduced when the desired signal level is around -87 dBm to about -95 dBm. Even though this occurs, the point at which this trace crosses the 70-percent reply efficiency level is nearly identical to that of the baseline data. The maximum reply efficiency was 88 percent for the baseline data and about 81 percent for the 1k Mode S (no ATCRBS) data. Because of this small difference, no additional Mode S fruit data were collected at frequency separations further than delta F=3 MHz.

When delta F=6 MHz data are examined, it is clear that this frequency guardband provides the necessary isolation to the SGV to protect it from being affected by ATCRBS fruit. The curves shown in figures 13i and j almost fall on top of each other, and in fact, it is difficult to distinguish any individual curve.

Figure 13k is included only to illustrate that when the frequency separation is increased further to delta F=9 MHz, there is still no effect on reply efficiency noticed. Hence, the data indicate that if TACAN/DME ground beacon receiver channels are separated from 1090 MHz by at least 6 MHz, their operation could be considered unaffected by ATCRBS and/or Mode S airborne replies.

Figure 14 contains the same beacon reply efficiency data previously described, but is presented in a different form. The bar graphs shown represent a single reply efficiency point from the corresponding reply efficiency data curve of the same undesired signal conditions. A definition of beacon receiver sensitivity is the lowest desired signal level at which reply efficiency is equal to or greater than 70 percent. The reply efficiency at this signal level is considered the "baseline reply efficiency." When undesired signals are present, the reply efficiency at receiver sensitivity can be compared to that of the baseline reply efficiency, and any difference noted would indicate an effect on system performance. For example, examine the case of delta F=0 and Mode S fruit of 1k (top of 14a). The first bar to the left represents a reply efficiency of 80 percent (while no undesired signals were present) and occurred at a desired signal level of -97 dBm. Next, when the various combinations of ATCRBS fruit and 1k of Mode S fruit were introduced, the reply efficiency of the beacon at the desired signal level of -97 dBm resulted in the values shown.

To determine when undesired signals have no effect on beacon reply efficiency, simply examine the bar graph plots presented. Figure 14f shows that at delta F=6 MHz, ATCRBS fruit rate of 40k, reply efficiency is 70 percent at receiver sensitivity. Hence, at this point, receiver sensitivity (as defined here) remains the same as the baseline.

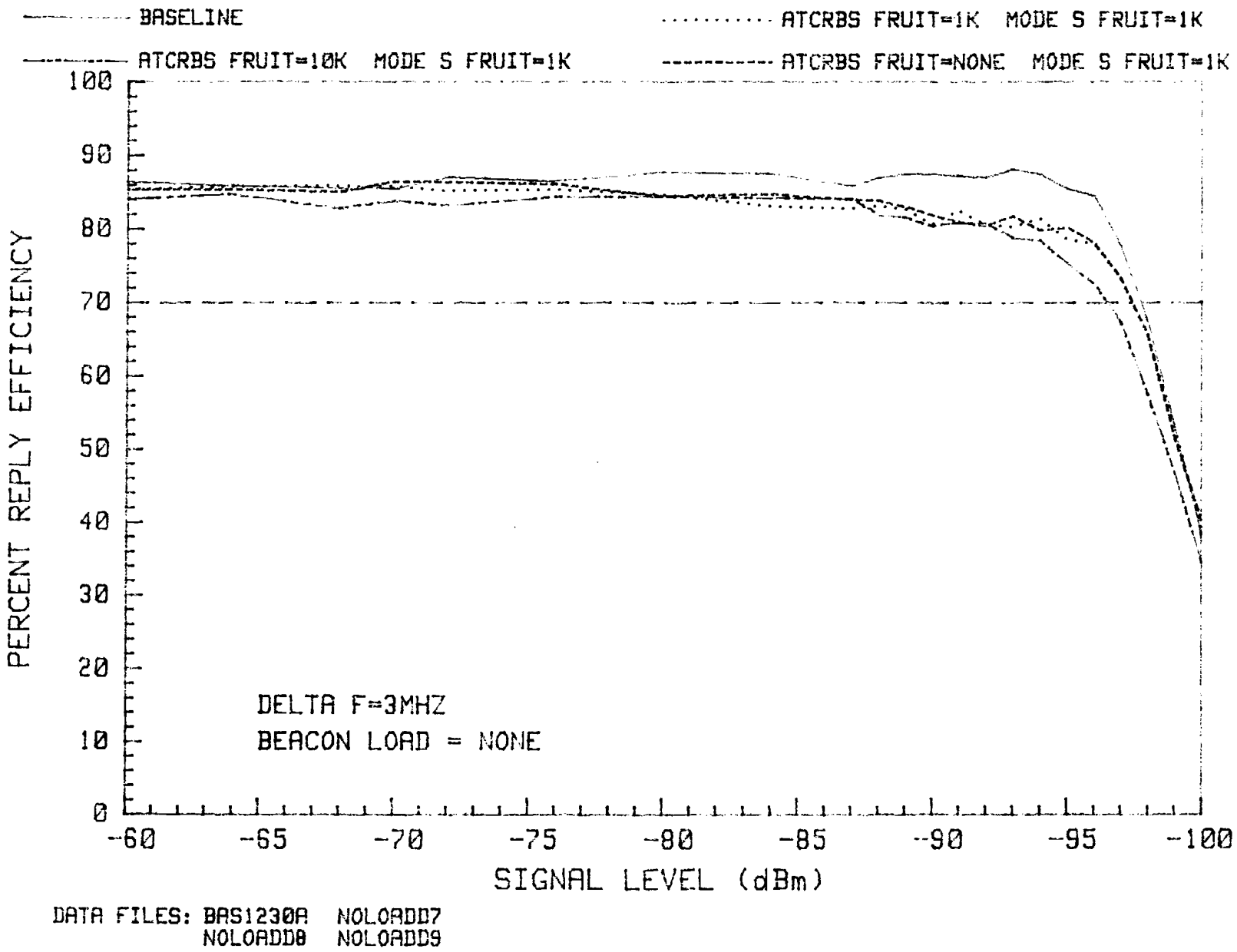

FIGURE 13e. SECOND GENERATION VORTAC TACAN EMC EFFECTS FROM 1090-MHz WAVEFORMS

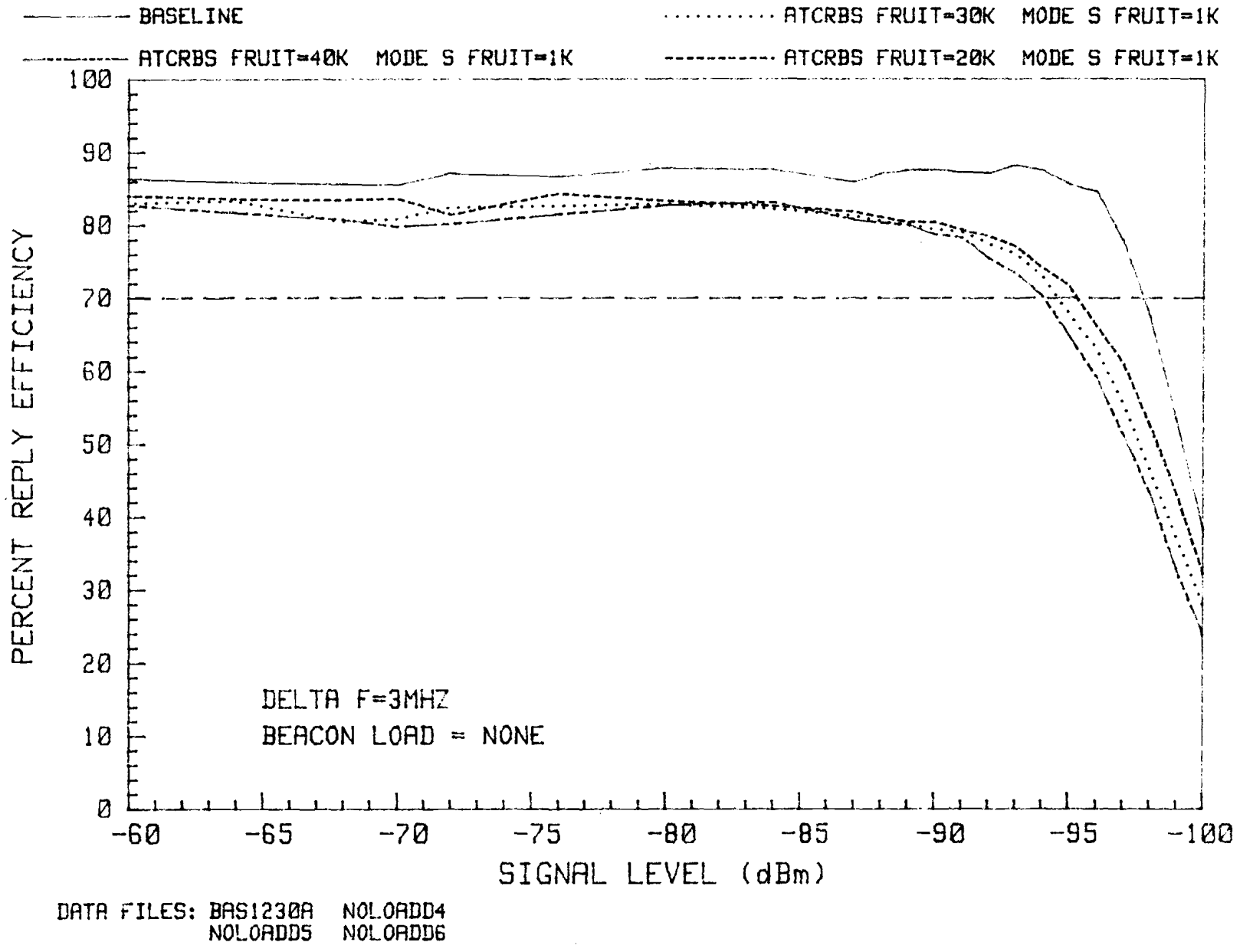

FIGURE 13f. SECOND GENERATION VORTAC TACAN EMC EFFECTS FROM 1090-MHz WAVEFORMS

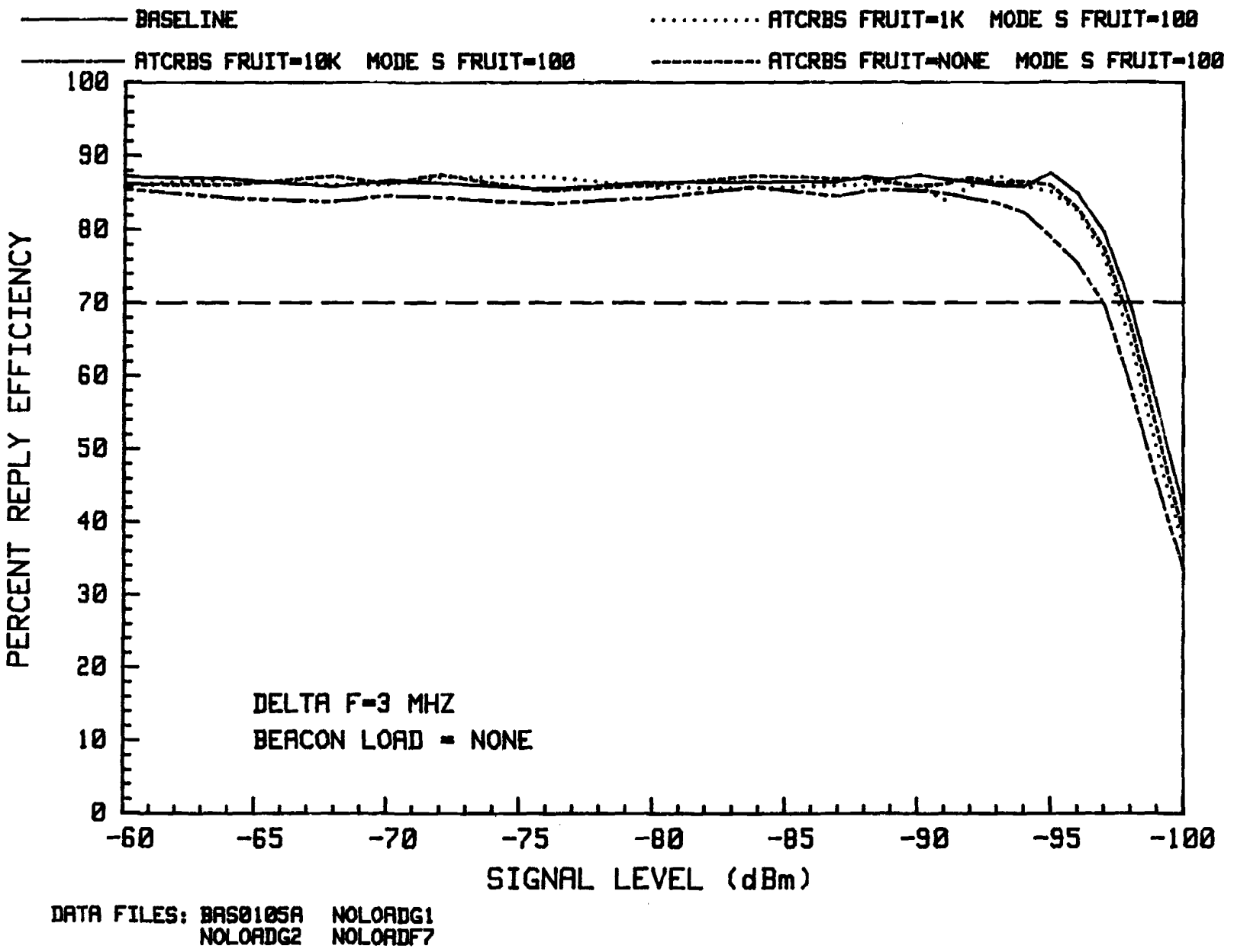

FIGURE 13g. SECOND GENERATION VORTAC TACAN EMC EFFECTS FROM 1090-MHz WAVEFORMS

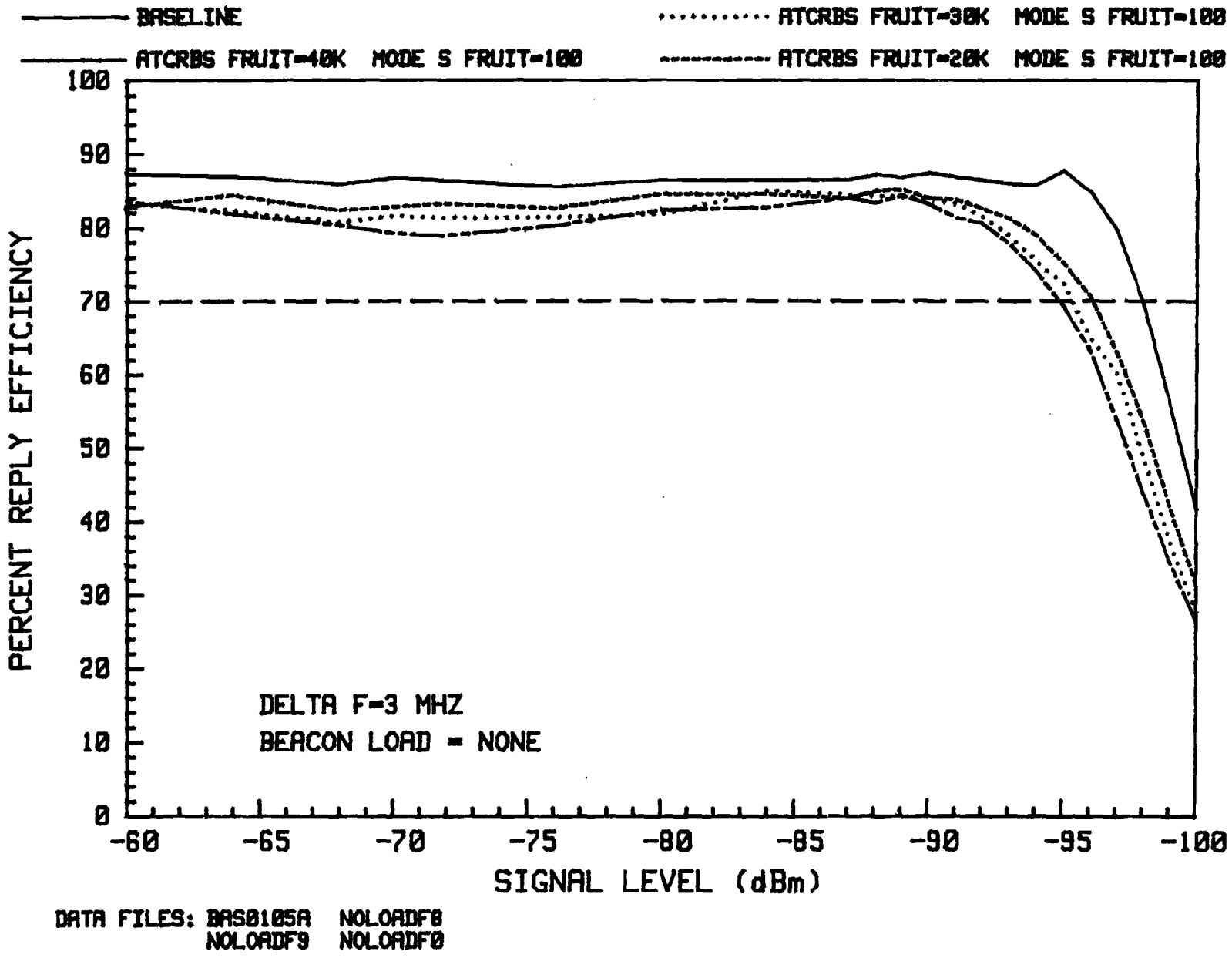

FIGURE 13h. SECOND GENERATION VORTAC TACAN EMC EFFECTS FROM 1090-MHz WAVEFORMS

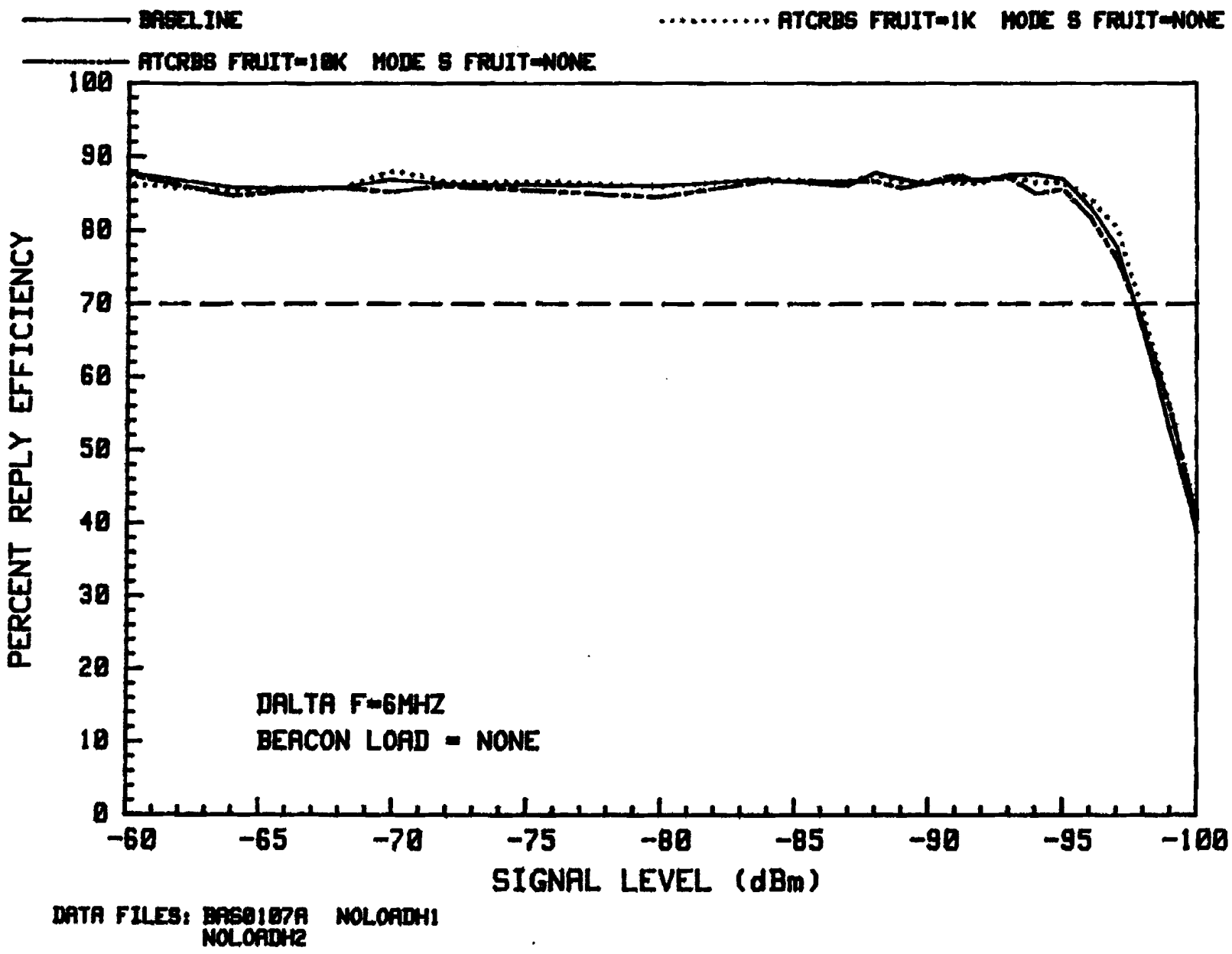

FIGURE 13i. SECOND GENERATION VORTAC TACAN EMC EFFECTS FROM 1090-MHz WAVEFORMS

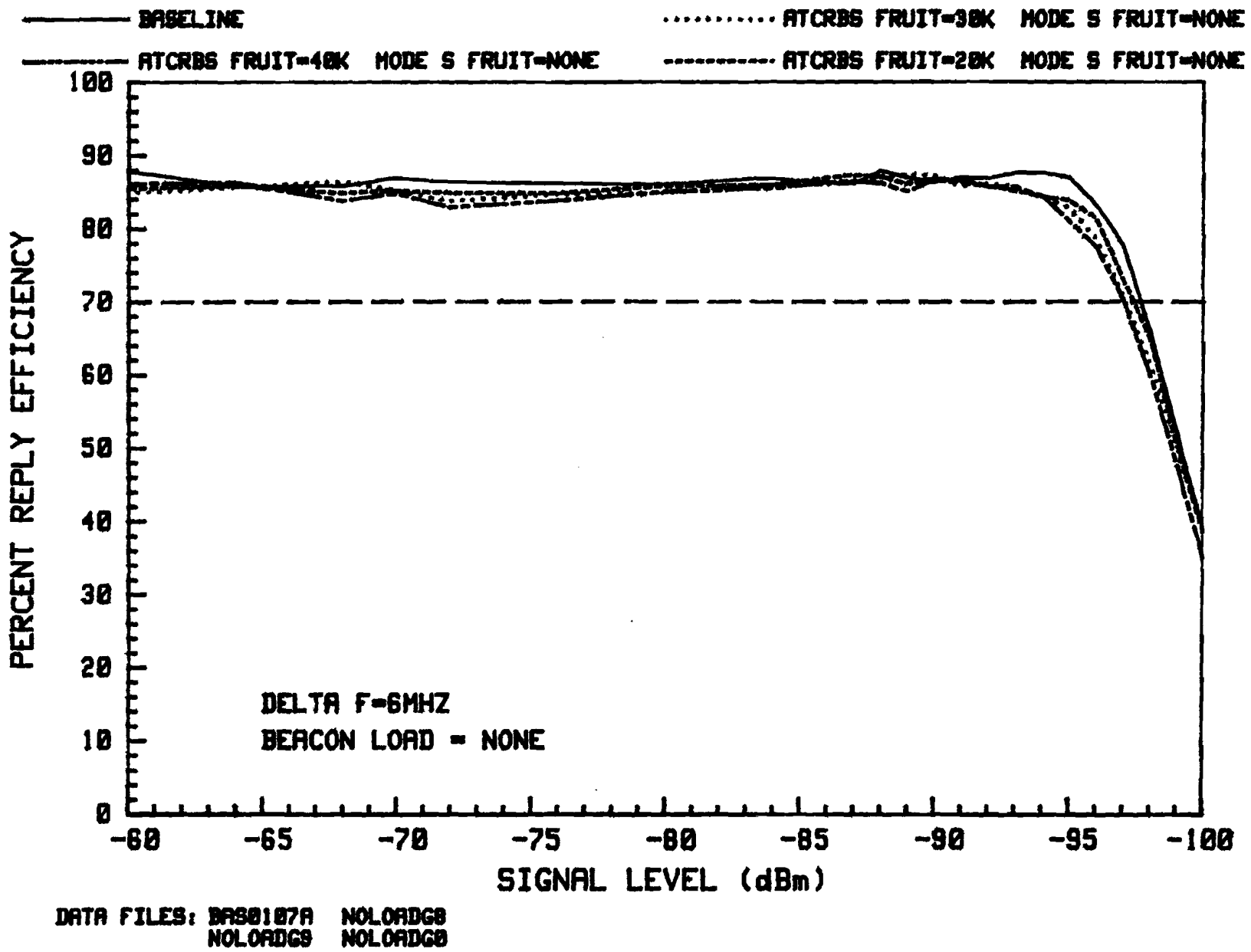

FIGURE 13j. SECOND GENERATION VORTAC TACAN EMC EFFECTS FROM 1090-MHz WAVEFORMS

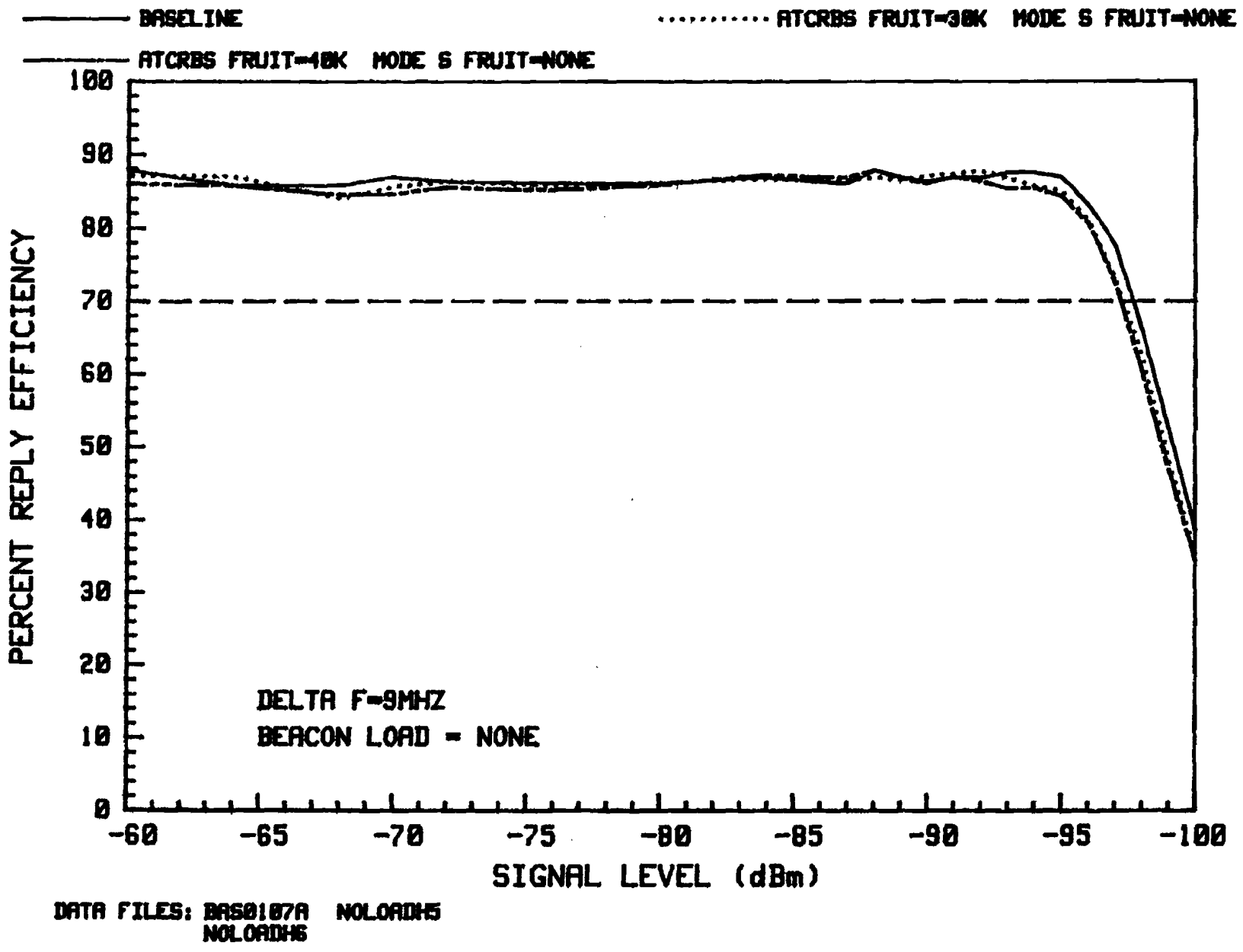

FIGURE 13k. SECOND GENERATION VORTAC TACAN EMC EFFECTS FROM 1090-MHz WAVEFORMS

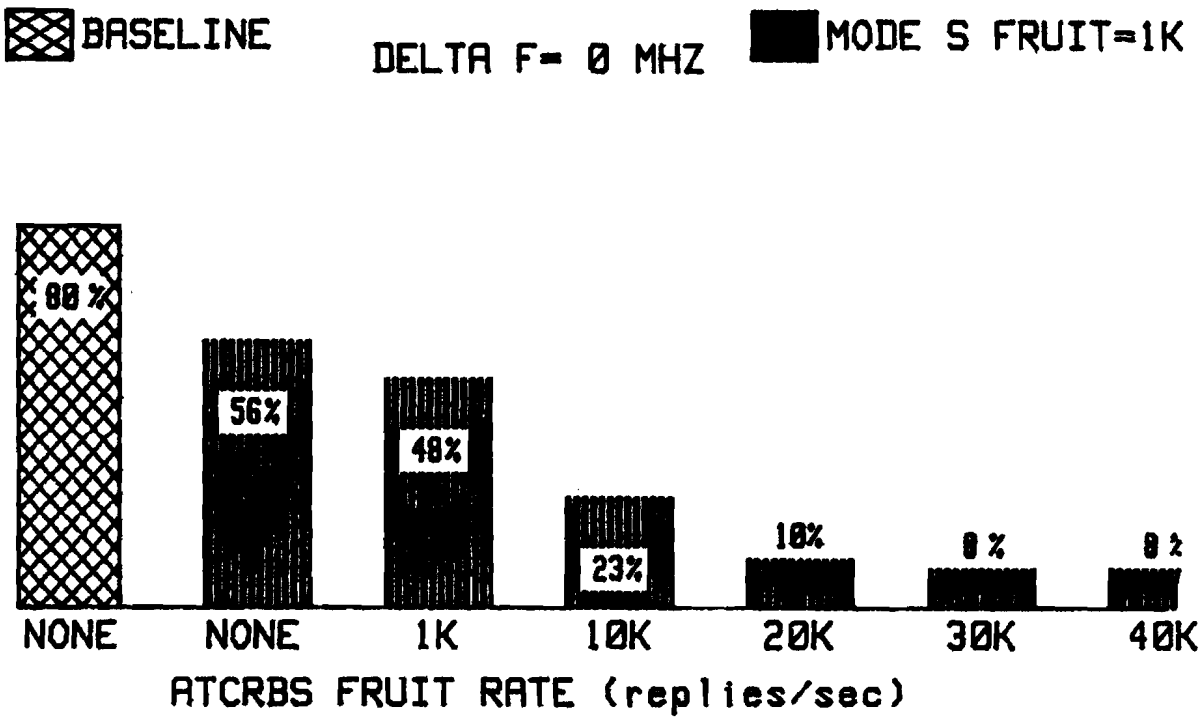

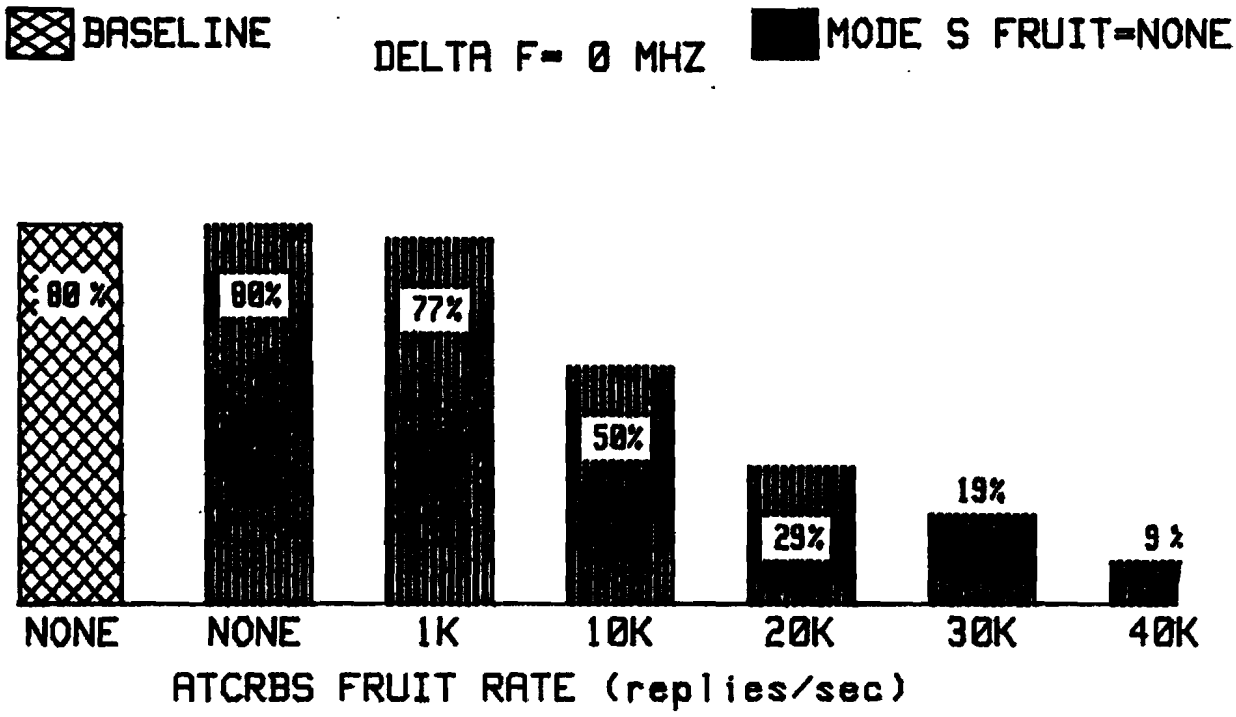

FIGURE 14a. REPLY EFFICIENCY AT RECEIVER SENSITIVITY

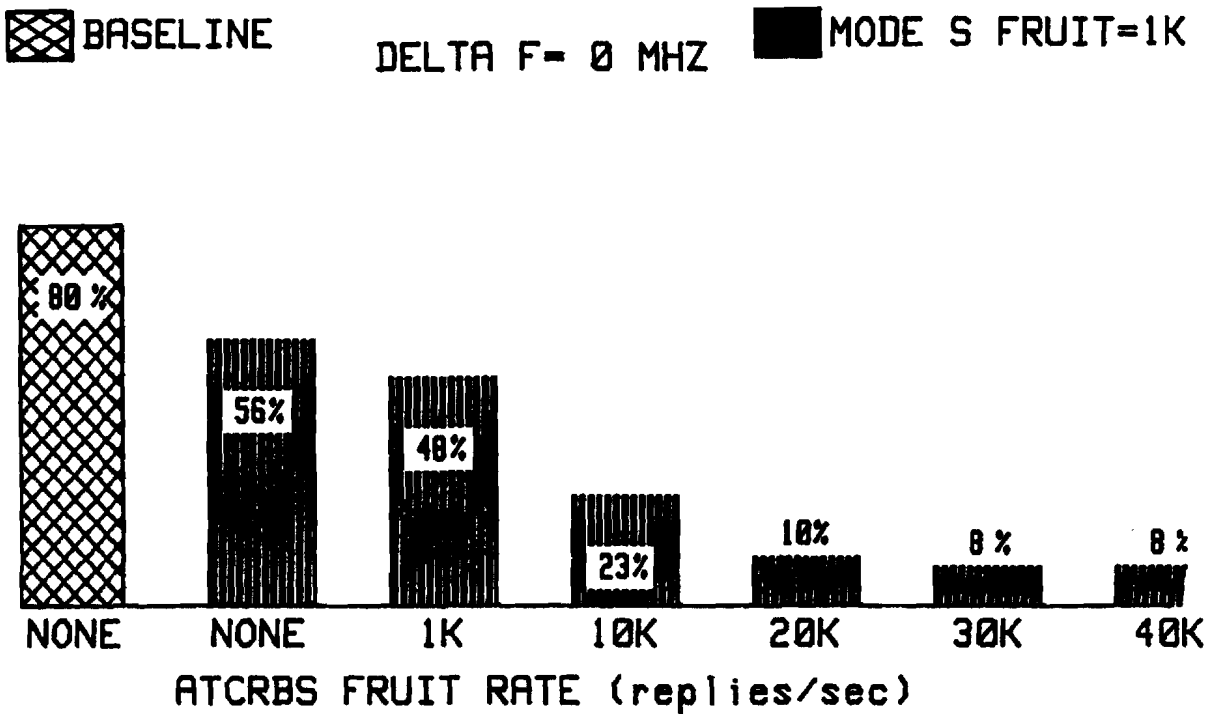

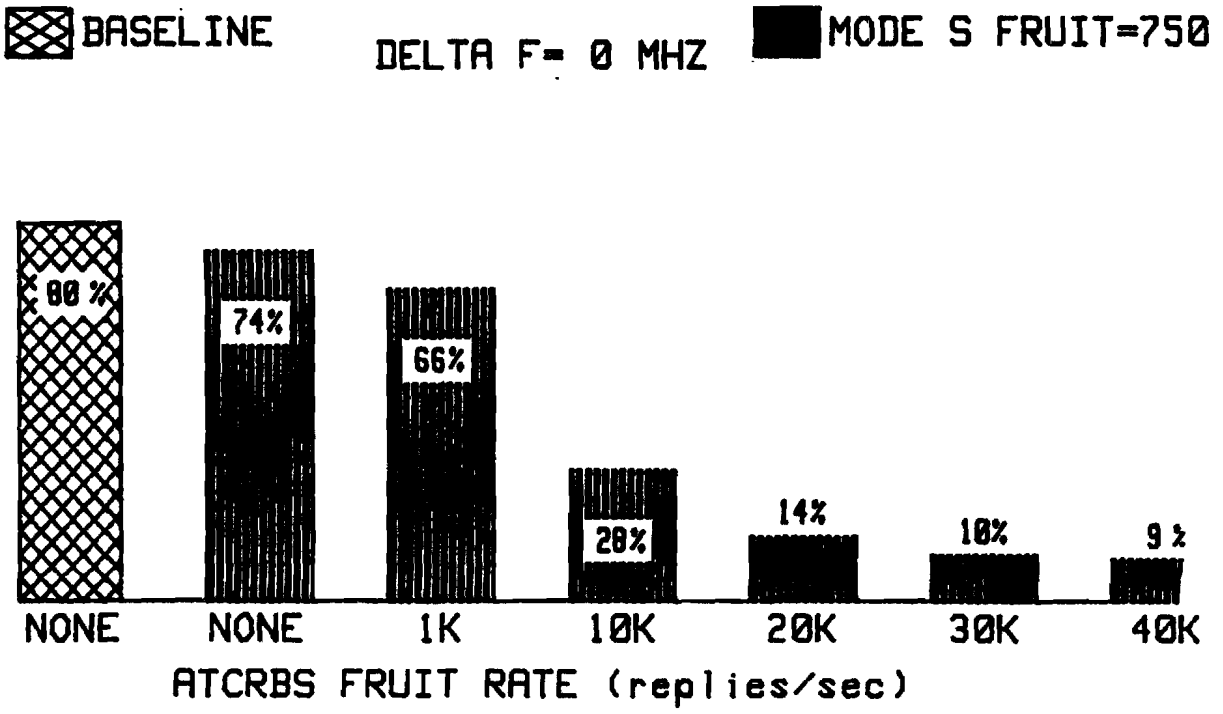

FIGURE 14b. REPLY EFFICIENCY AT RECEIVER SENSITIVITY

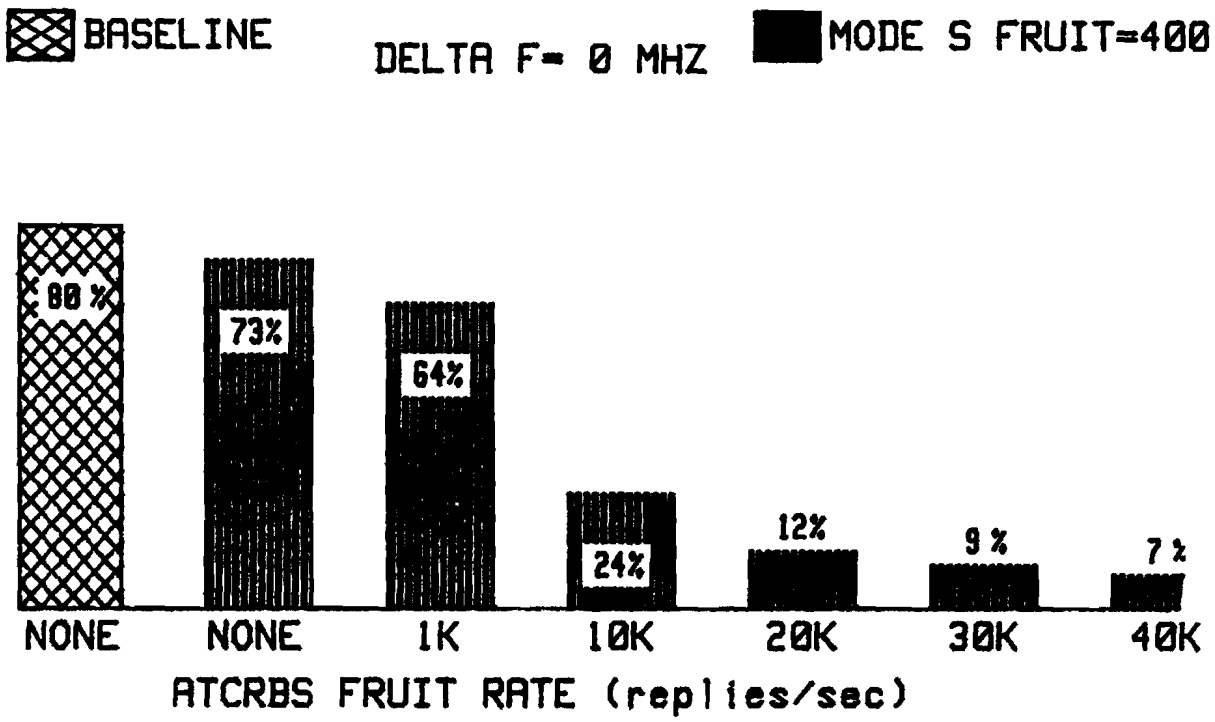

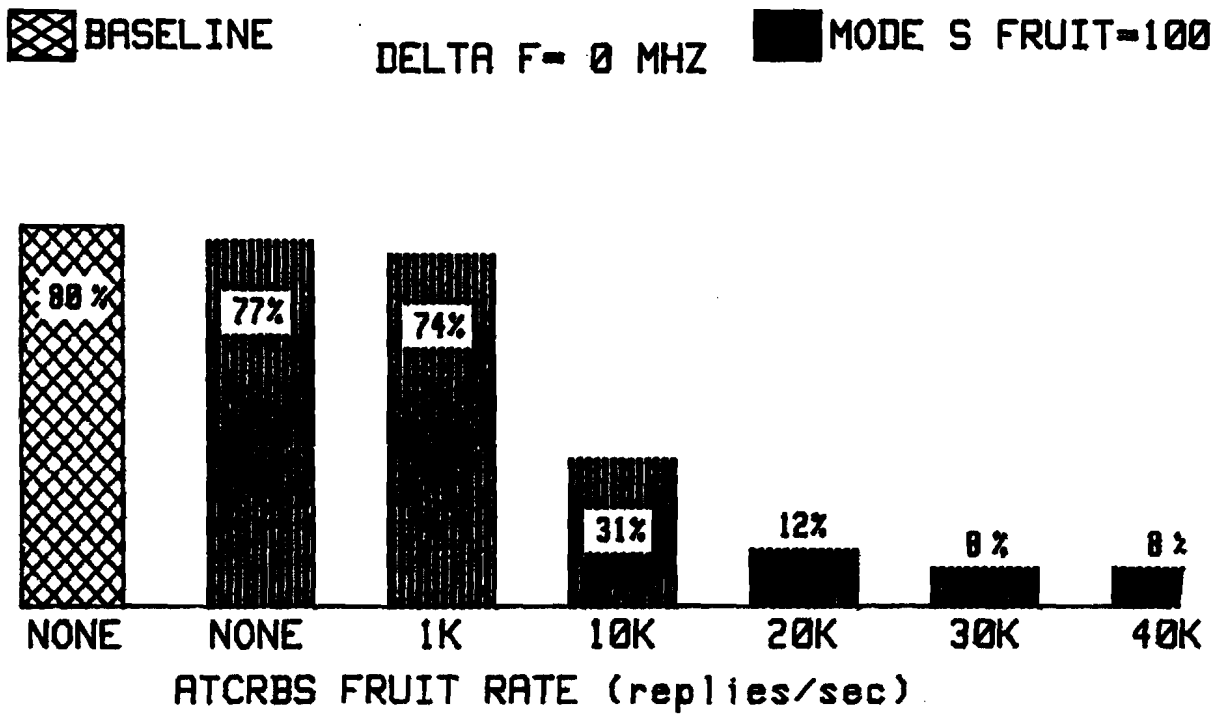

FIGURE 14c. REPLY EFFICIENCY AT RECEIVER SENSITIVITY

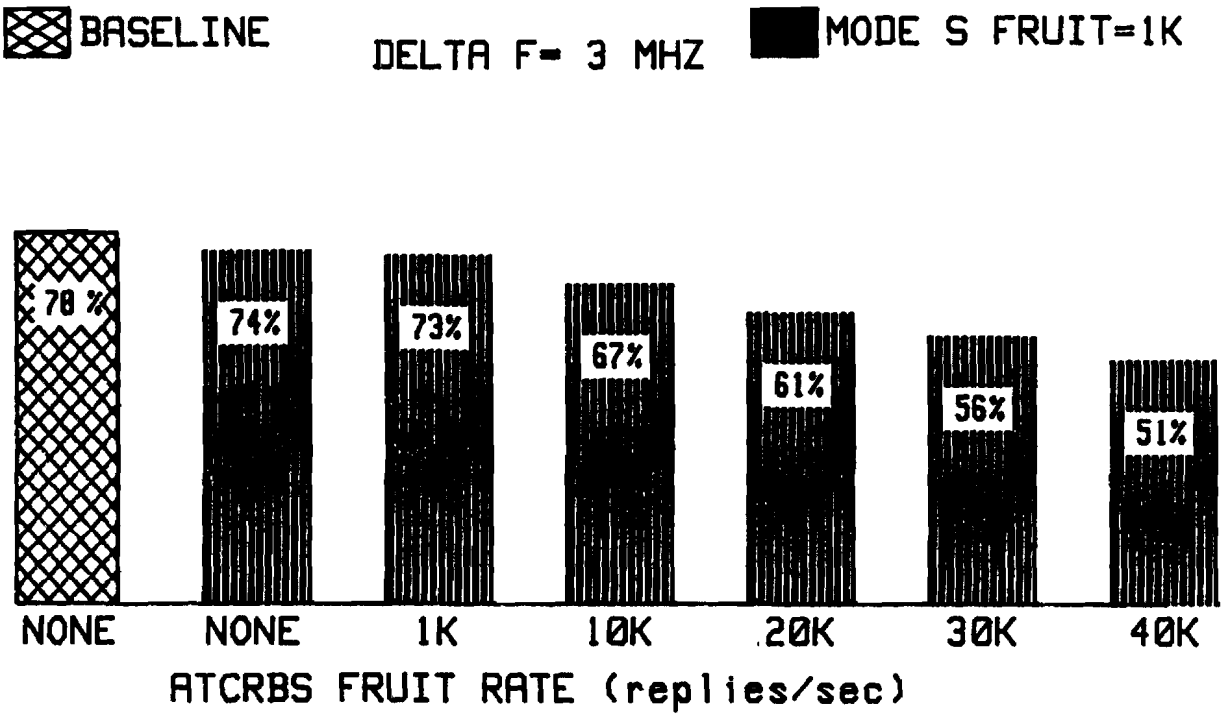

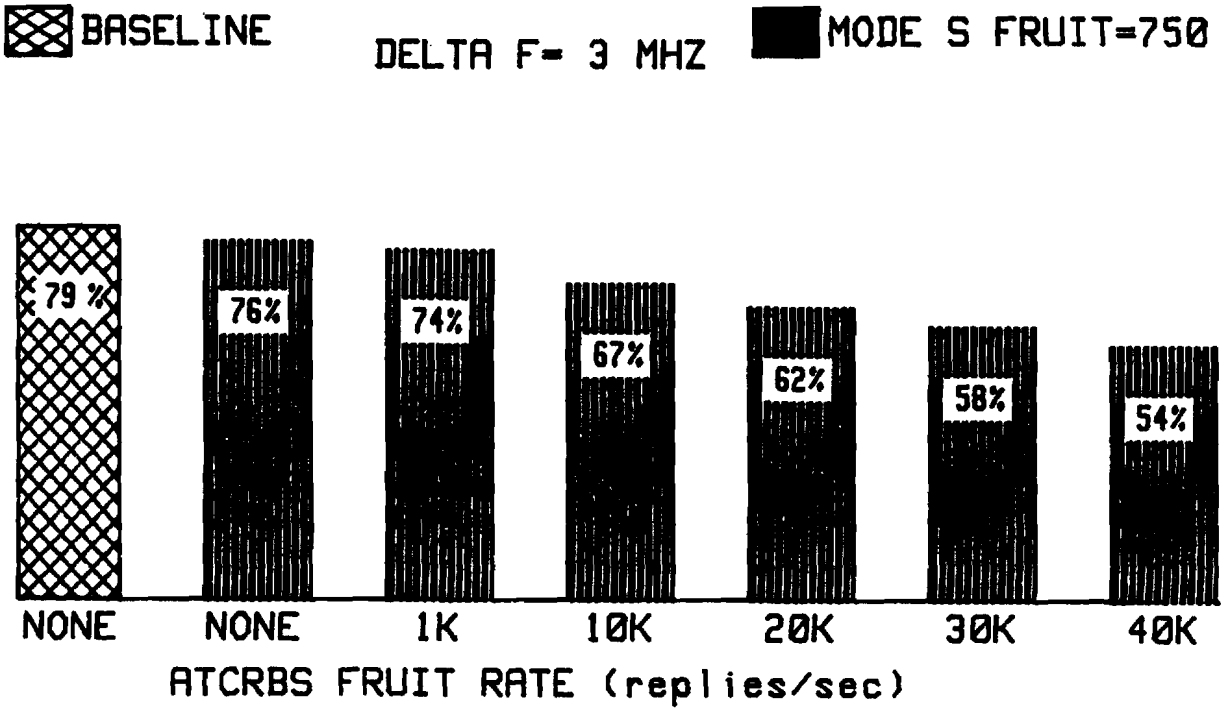

FIGURE 14d. REPLY EFFICIENCY AT RECEIVER SENSITIVITY

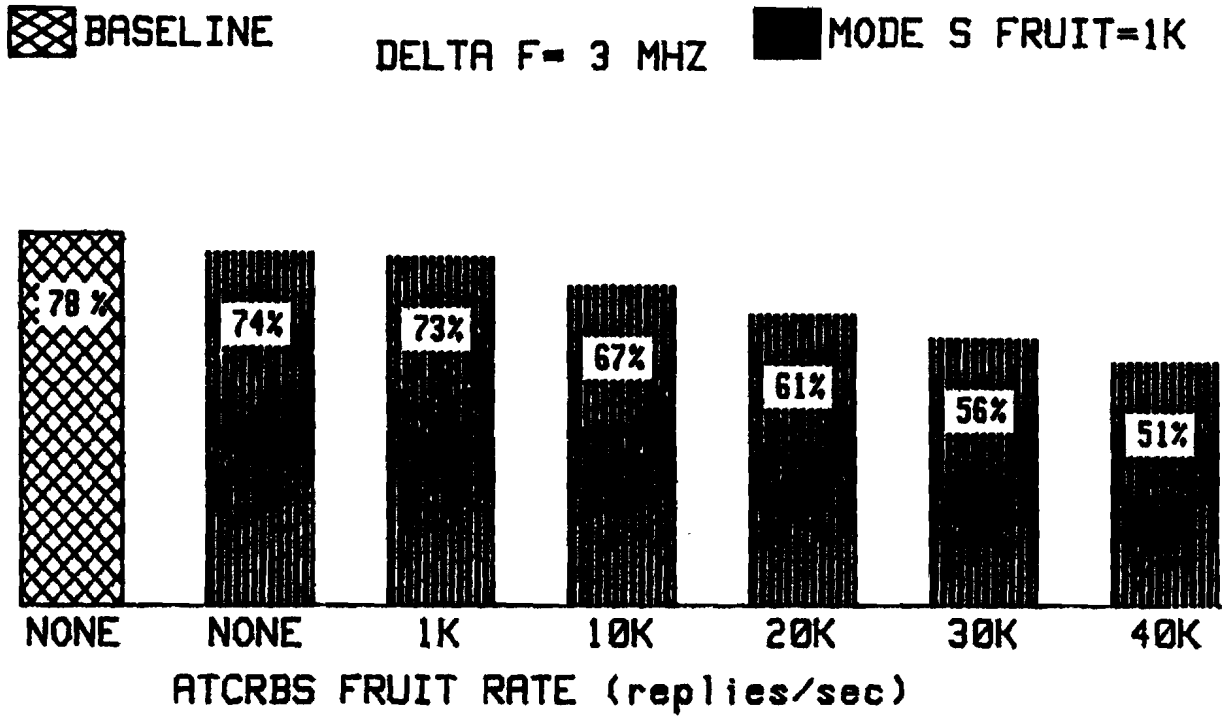

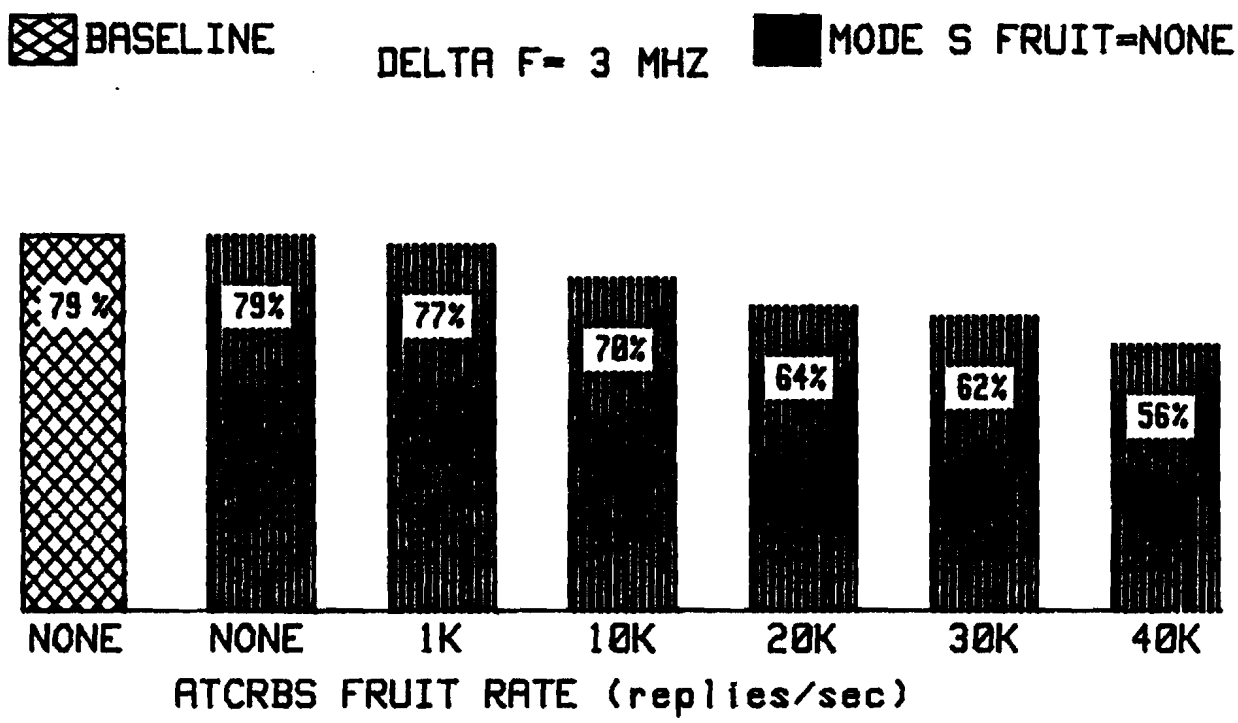

FIGURE 14e. REPLY EFFICIENCY AT RECEIVER SENSITIVITY

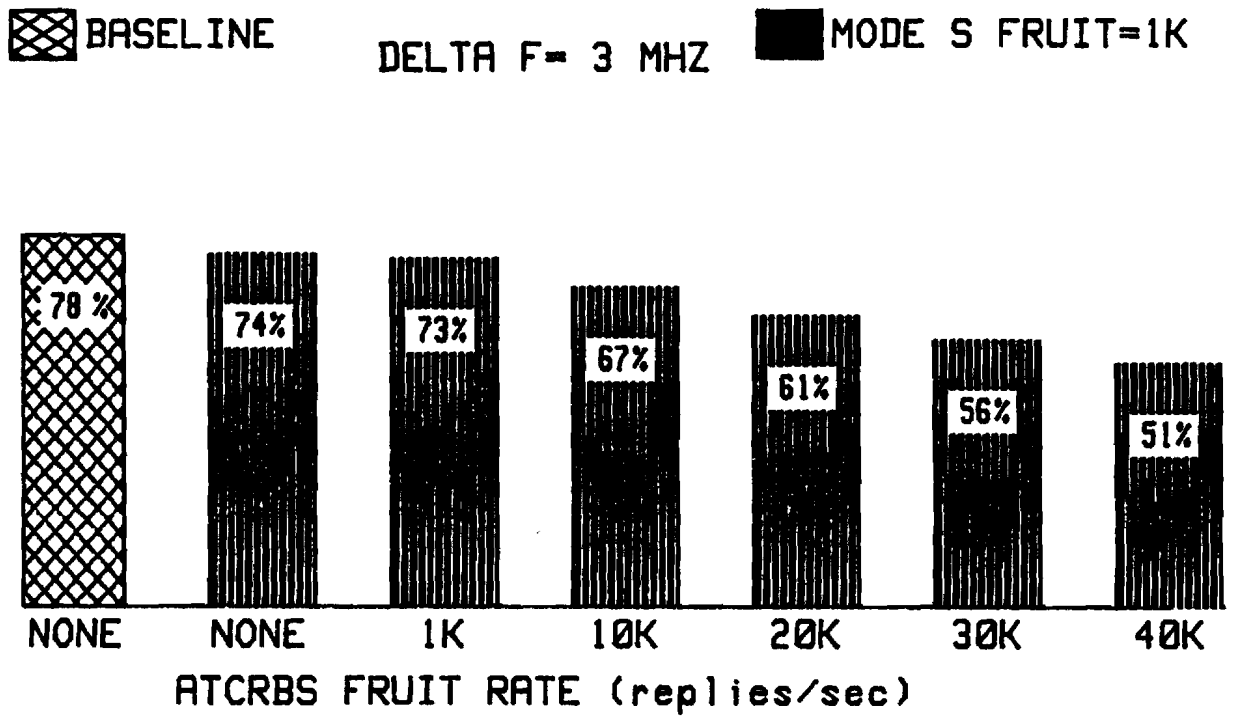

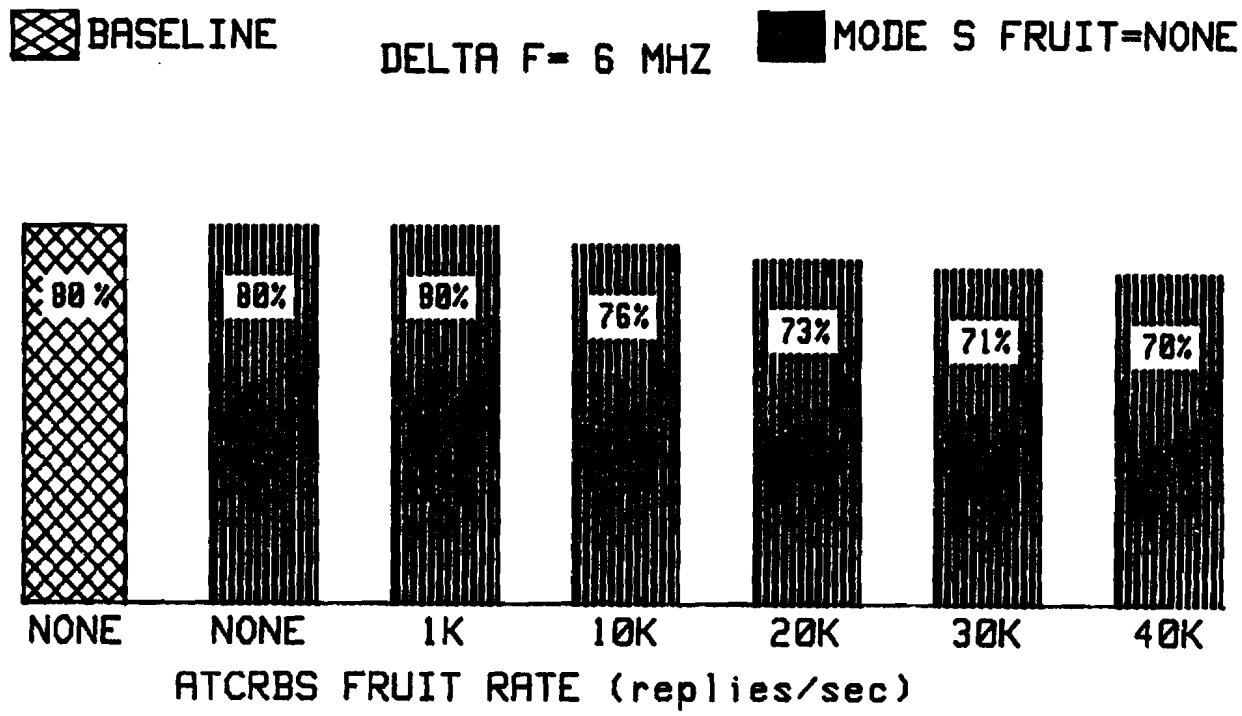

FIGURE 14f. REPLY EFFICIENCY AT RECEIVER SENSITIVITY

Another concept used in determining EMC effects on TACAN/DME beacon receivers employs more operational considerations than those used to examine this test data thus far. Since TACAN and (especially) DME are distance function systems, one might wonder how the service volume, in miles from the ground beacon, is affected by undesired signals. This type of consideration is generally given when evaluating airborne TACAN or DME interrogator units through the comparison of the Acquisition Stable Operating Point (ASOP). ASOP is the minimum signal level of the ground beacon acquired by an interrogator. ASOP can be retaken in the presence of extraneous undesired signals. Any change in ASOP (usually expressed in dBm) can be related to a change in distance from the ground beacon, e.g., if the ASOP changes from -86 dBm to -76 dBm when extraneous signals are present, the aircraft had to be closer (in distance) to the ground beacon in order to receive the -76 dBm signal level. Hence, coverage area of the TACAN or DME system was reduced.

The reply efficiency data of ground beacons when subjected to extraneous undesired signals could be examined in a similar manner. At what desired signal level does the beacon reply efficiency exceed 70 percent? Is it reduced below -92 dBm? Can the performance of the beacon still comply with the U.S. National Aviation Standard? If these criteria were applied to the data shown in figures 13, then at delta F=3 MHz in the presence of 40k ATCRBS fruit and 1k of Mode S fruit, the beacon performance would be acceptable, even though a noticeable difference from baseline performance exists at lower desired signal levels (see figure 13f).

EFFECTS TEST RESULTS, 1030-MHz ENVIRONMENT.

Figure 15 shows plots of the beacon reply efficiency under various 1030-MHz environment conditions. The data plots show combinations of TCAS 1, 2, 3, and Mode S Sensor 1 and Sensor 2. An examination of the data reveals that a frequency separation guardband of at least 3 MHz is required between TACAN/DME beacon receivers and 1030 MHz. At delta F=3 MHz, the effect on reply efficiency from the 1030-MHz environment is negligible.

SUMMARY

Beacon performance is best characterized by reply efficiency. Because the objective of this test effort was to determine what frequency guardbands should be applied to protect the SGV TACAN/DME from interference from 1030- and 1090-MHz waveforms, reply efficiency was used to make that determination. The beacon reply efficiency results of tests conducted with the undesired signals were compared to that of baseline tests and any differences were noted. The 1090-MHz undesired signals were comprised of ATCRBS fruit up to 40k and Mode S fruit up to 1k. The 1030-MHz undesired signals were comprised of TCAS, Mode S, and ATCRBS ground station waveforms. The undesired RF signals were injected into the beacon receiver along with a desired signal interrogation. The tests with fruit were conducted with combinations of Mode S and ATCRBS fruit rates as well as individually (i.e., Mode S only, ATCRBS only).

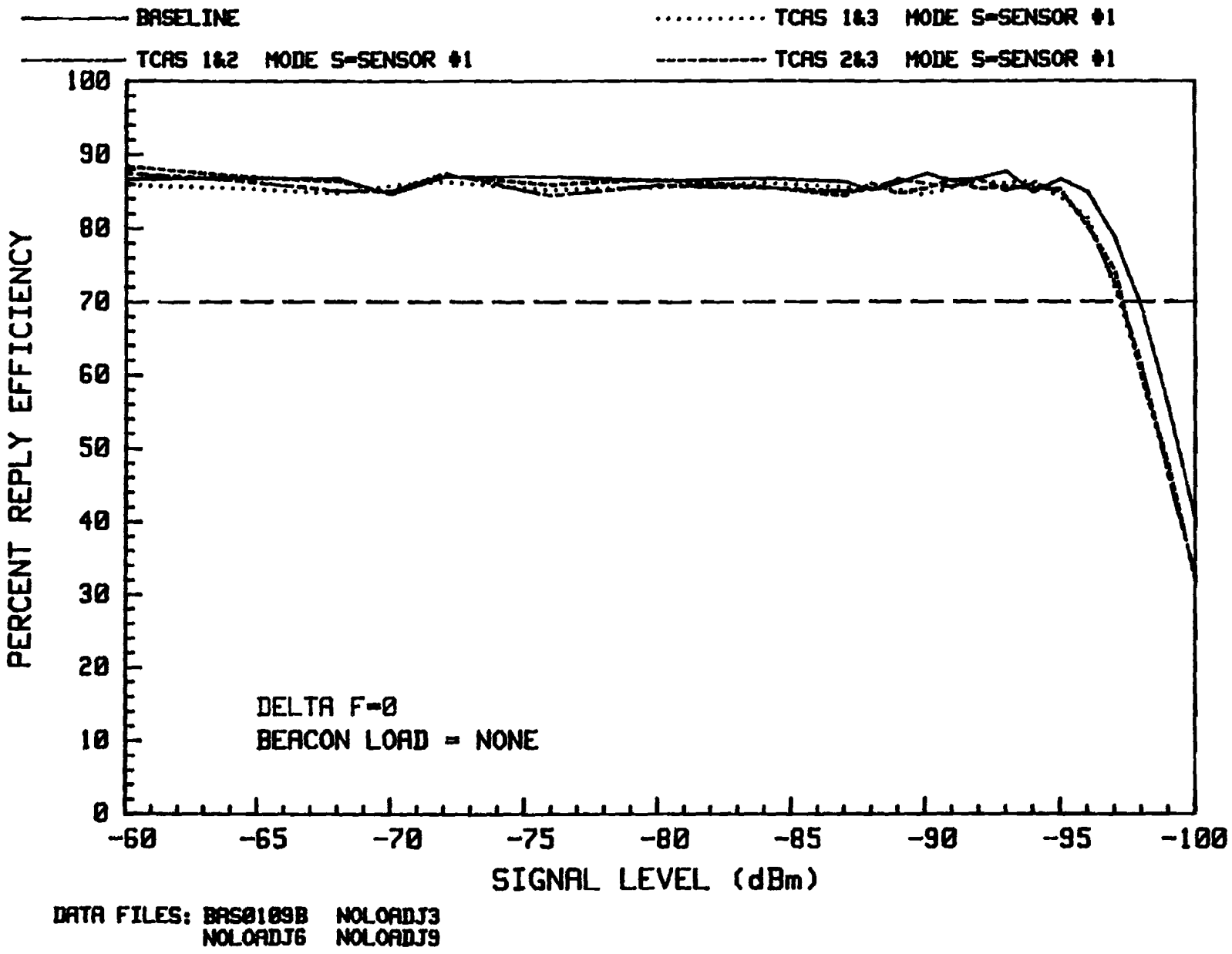

FIGURE 15a. SECOND GENERATION VORTAC TACAN EMC EFFECTS FROM 1030-MHz WAVEFORMS

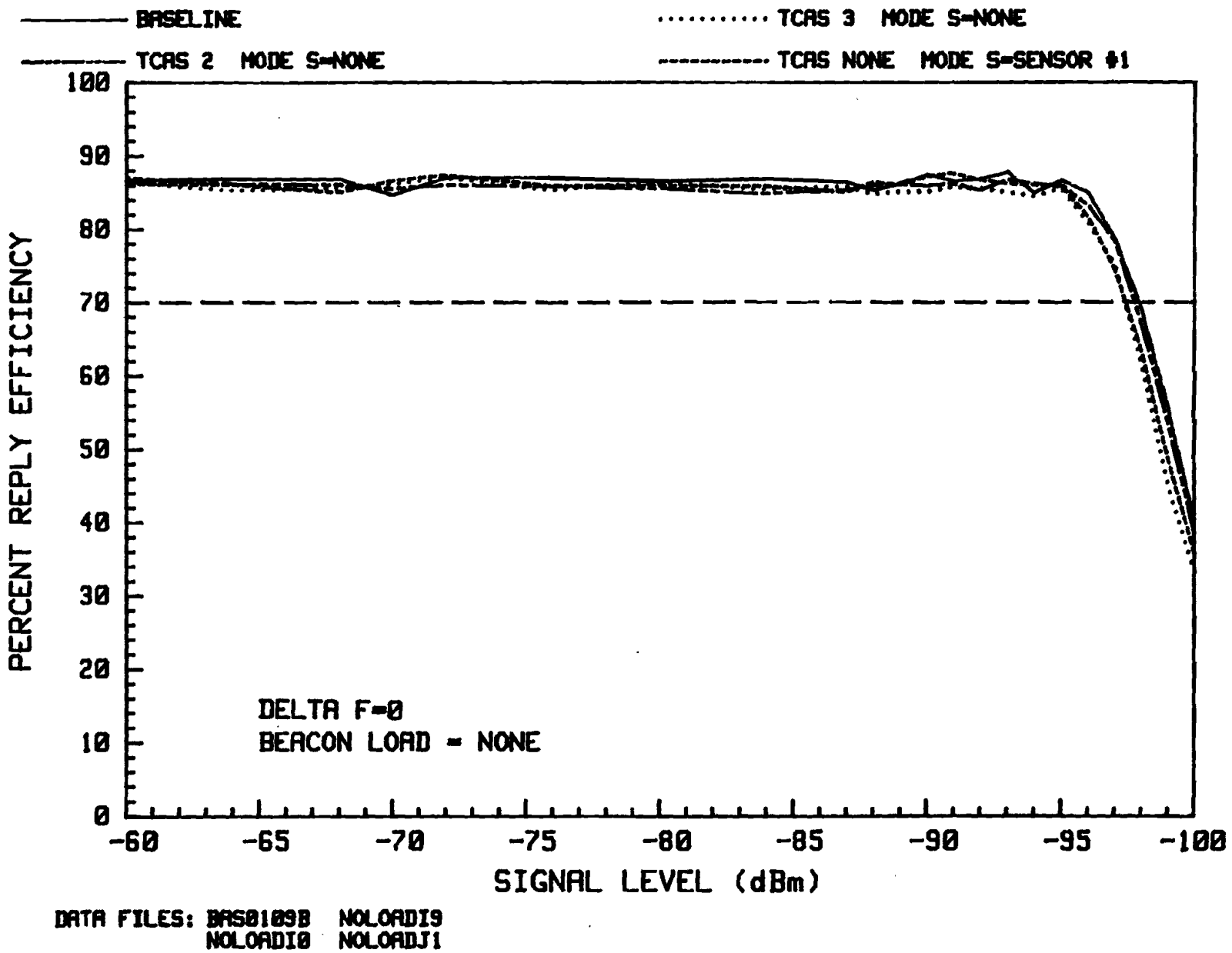

FIGURE 15b. SECOND GENERATION VORTAC TACAN EMC EFFECTS FROM 1030-MHz WAVEFORMS

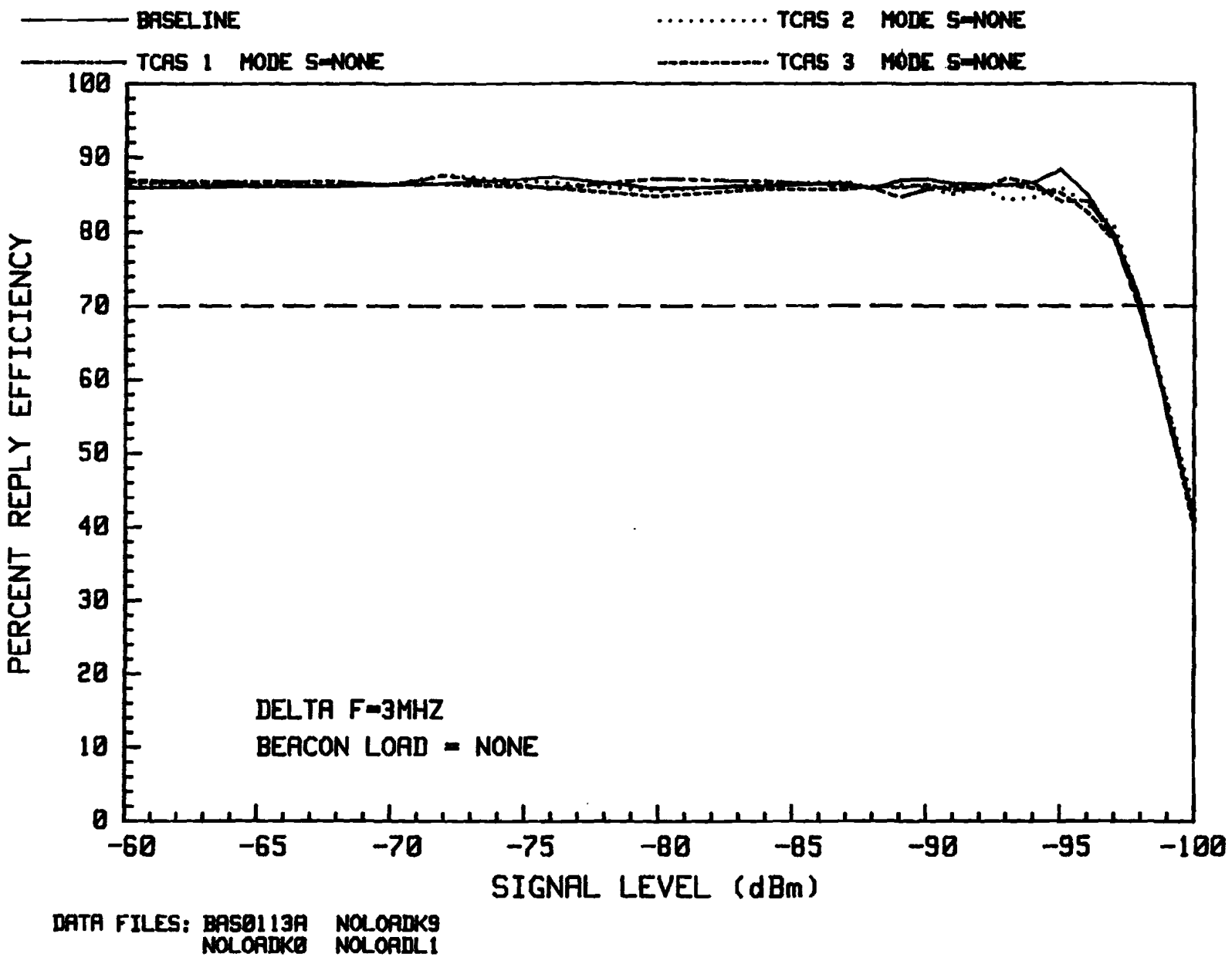

FIGURE 15c. SECOND GENERATION VORTAC TACAN EMC EFFECTS FROM 1030-MHz WAVEFORMS

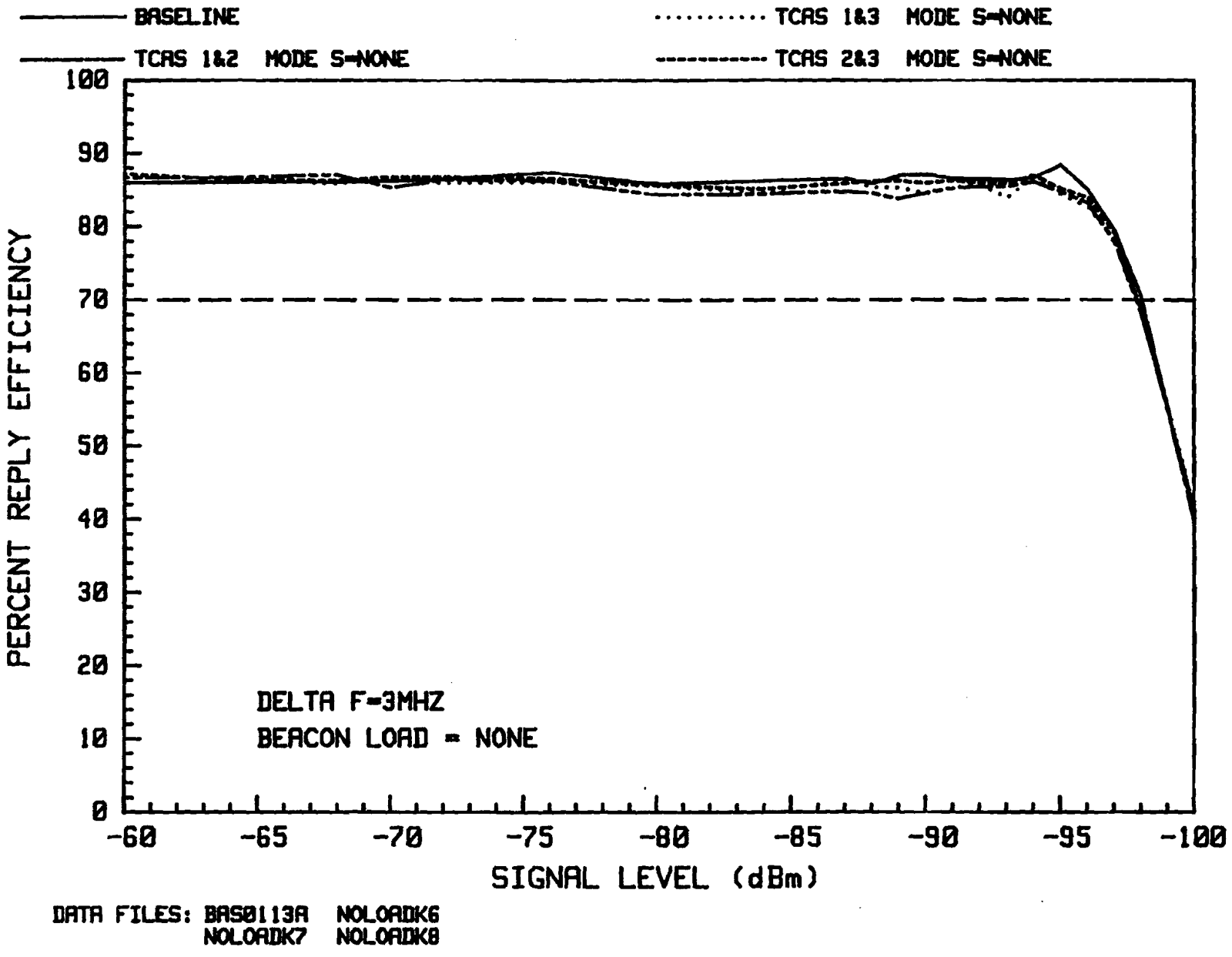

FIGURE 15d. SECOND GENERATION VORTAC TACAN EMC EFFECTS FROM 1030-MHz WAVEFORMS

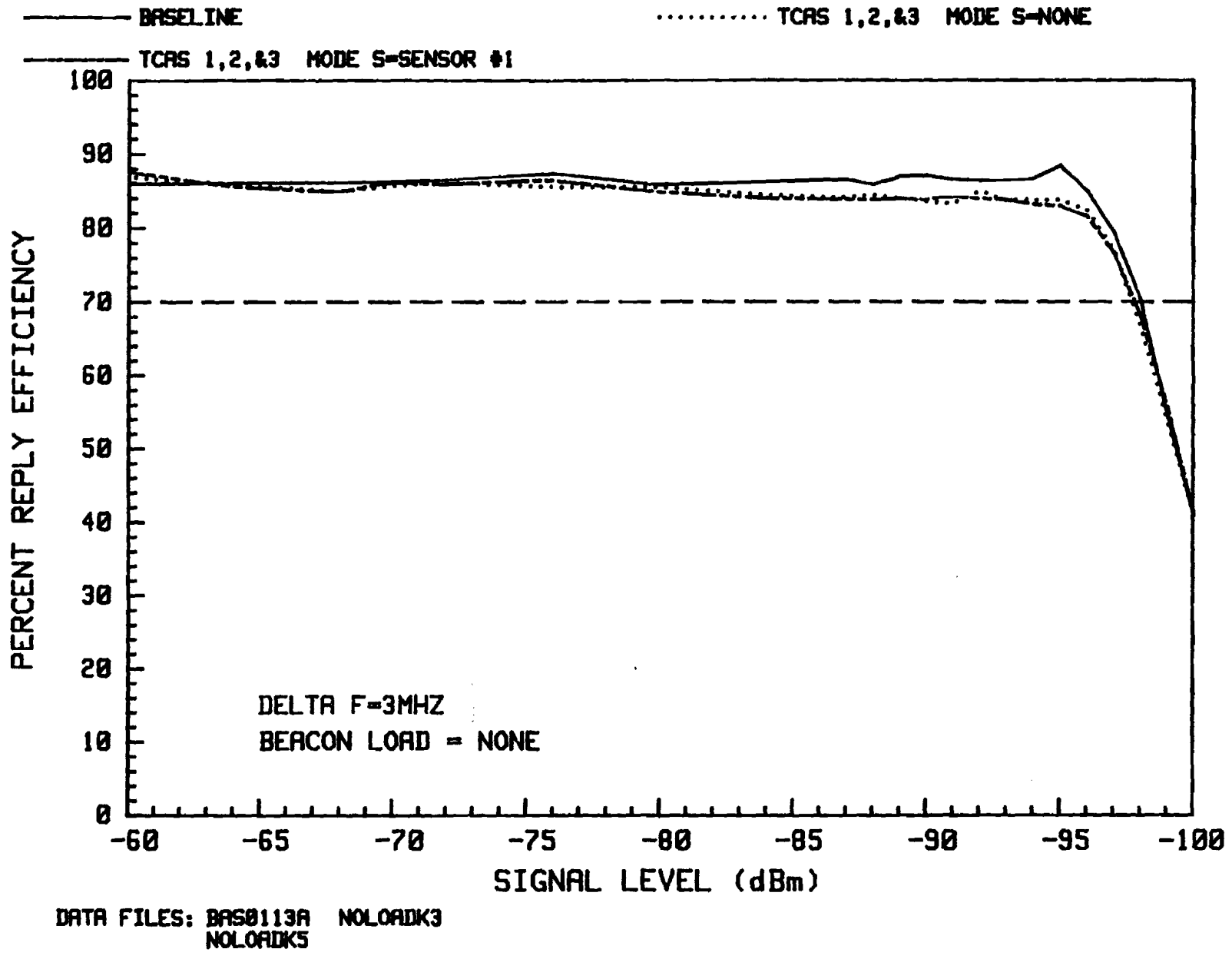

FIGURE 15e. SECOND GENERATION VORTAC TACAN EMC EFFECTS FROM 1030-MHz WAVEFORMS

The data show that when 1090-MHz Mode S fruit (up to 1k) was injected into the beacon receiver, the reply efficiency of the beacon was noticeably degraded until the frequency separation between the TACAN receiver and the Mode S fruit was at least 3 MHz. At delta F=3 MHz, the effect on beacon reply efficiency from 1090-MHz Mode S fruit was negligible.

When up to 40k of 1090-MHz ATCRBS fruit was injected into the beacon receiver, the data show that reply efficiency was comparable to the baseline tests when the frequency separation between the ATCRBS fruit and the beacon receiver was at least 6 MHz. When the fruit rate was lower, reply efficiency did not degrade as at higher fruit rates.

Results of the 1030-MHz tests indicate that beacon reply efficiency is minimally affected even at delta F=0 MHz. However, it was at delta F=3 MHz that reply efficiency performance degradation was negligible in the presence of 1030-MHz waveforms.

CONCLUSIONS

A guardband of at least 3 MHz will assure that the operation of the second generation VORTAC (SGV) distance measuring equipment (DME) receiver will not be affected when operating in the X-mode in the presence of 1030-MHz interference.

A guardband of at least 6 MHz is required in order to not affect DME receiver operation in an environment of up to 40k of Air Traffic Control Radar Beacon System (ATCRBS) 1090 MHz fruit.

Limited testing of the SGV while operating in Y-mode indicates a difference in performance when operating in X-mode. Further investigation of this performance difference is recommended prior to Y-mode frequency assignments by the Federal Aviation Administration.

REFERENCES

1. The U.S. National Aviation Standard for the Mark X (SIF) Air Traffic Control Radar Beacon System (ATCRBS) Characteristics, DOT Order 1010.51A, March 8, 1971 (appendix A).

2. The International Standard and Recommended Practices' Aeronautical Telecommunications, Annex 10, to The Convention on International Civil Aviation, Volume 1, third edition, July 1972.

3. DO-144 Minimum Operational Characteristics (MOC) Airborne ATC Transponders, Radio Technical Commission for Aeronautics (RTCA).

4. DO-150 Minimum Performance Standards (MPS) Airborne ATC Transponders, Radio Technical Commission for Aeronautics (RTCA).