technical note technical note technical note

COPY 1

FEDERAL AVIATION ADMINISTRATION
AUG 15
TECHNICAL CENTER LIBRARY
ATLANTIC CITY INT'L AIRPORT, N.J.

The Aircraft Reply and Interference Environment Simulator (ARIES) Hardware Maintenance Manual, Volume I

Edward Mancus
Andrew Leone
Thomas Bratton
Charles Dudas

November 1988

DOT/FAA/CT-TN88/3, I

Document is on file at the Technical Center
Library, Atlantic City International Airport, N.J. 08405

U.S. Department of Transportation
Federal Aviation Administration

Technical Center
Atlantic City International Airport, N.J. 08405

FAA TECHNICAL CENTER LIBRARY
00013958

Technical Report Documentation Page

1. Report No.	2. Government Accession No.	3. Recipient's Catalog No.
DOT/FAA/CT-TN88/3, I		

4. Title and Subtitle	5. Report Date
The Aircraft Reply and Interference Environment Simulator (ARIES) Hardware Maintenance Manual, Volume I	November 1988
	6. Performing Organization Code ACN-220
7. Author(s) Edward Mancus, Andrew Leone, Thomas Bratton, and Charles Dudas	8. Performing Organization Report No. DOT/FAA/CT-TN88/3, I
9. Performing Organization Name and Address Federal Aviation Administration FAA Technical Center Atlantic City International Airport, NJ 08405	10. Work Unit No. (TRAIS)
	11. Contract or Grant No. T1007A
12. Sponsoring Agency Name and Address U.S. Department of Transportation Federal Aviation Administration Program Engineering and Maintenance Service Washington, D.C. 20590	13. Type of Report and Period Covered Technical Note November 1988
	14. Sponsoring Agency Code

15. Supplementary Notes

16. Abstract

The Aircraft Reply and Interference Environment Simulator (ARIES) makes possible the performance assessment of a Mode Select (Mode S) sensor under its specific maximum aircraft load. To do this, ARIES operates upon disk files for traffic model and interference to generate simulated aircraft replies and fruit, feeding them to the sensor at radio frequency. Support documentation for ARIES, of which this is the first volume of the Hardware Maintenance Manual, consists of:

Hardware Principles of Operation: Volume I (DOT/FAA/CT-TN88/4, to be published)
Appendixes of the Hardware Principles of Operation: Volume II (to be published)
Appendixes of the Hardware Maintenance Manual: Volume II (to be published)
ARIES Software Principles of Operation (DOT/FAA/CT-TN87/16, to be published)
ARIES Software User's Manual (DOT/FAA/CT-TN88/15, to be published)

The ARIES Hardware Maintenance Manual describes how to load, select, and execute the hardware maintenance software package for the purpose of verifying the operational status of the ARIES special purpose hardware designed and fabricated by the Federal Aviation Administration Technical Center.

17. Key Words	18. Distribution Statement
ARIES Mode S Hardware Maintenance Manual/ARIES	Document is on file at the Technical Center Library, Atlantic City International Airport, New Jersey 08405

19. Security Classif. (of this report)	20. Security Classif. (of this page)	21. No. of Pages	22. Price
Unclassified	Unclassified	178	

Form DOT F 1700.7 (8-72) Reproduction of completed page authorized

TABLE OF CONTENTS

	Page
EXECUTIVE SUMMARY	ix
1. INTRODUCTION	1
2. BACKGROUND	1
3. RELATED DOCUMENTS	3
4. MAINTENANCE PROGRAM OVERVIEW	3
4.1 Validation Test Routines	6
4.2 Validation Data Dump Routines	7
4.3 Diagnostic Routines	8
4.4 Help Test Files	8
5. SYSTEM STARTUP	8
5.1 Aries Bootup Procedure	9
5.2 Self Test Unit Bootup Procedure	11
5.3 Maintenance Program Load/Terminate Procedure	13
5.3.1 Screen Option	20
6. RUNNING MAINTENANCE ROUTINES	20
6.1 Running Validation Test and Data Dump Routines	23
6.2 Using Help Files	26
6.3 Running Diagnostic Routines	26
7. DESCRIPTION OF ARIES MAINTENANCE ROUTINES	28
7.1 Summary Log	28
7.1.1 Summary Log Function Menu	30
7.2 Uplink Receiver/Azimuth Generator	31
7.2.1 Validation Test and Data Dump Routines	32
7.2.2 Diagnostic Routine No.1	35
7.3 Modeled Reply Generator	38
7.3.1 Validation Test and Data Dump Routines	39
7.3.2 Diagnostic Routines	46
7.4 Fruit Reply Generator	56
7.4.1 Validation Test and Data Dump Routines	58
7.4.2 Diagnostic Routines	67
7.4.3 Data Base Generation Routine	79
7.4.4 Fruit Environment Statistics Routine	80

TABLE OF CONTENTS (CONTINUED)

	Page
7.5 Universal Interval Timer	82
7.5.1 Validation Test and Data Dump Routine	83
7.5.2 Diagnostic Routine No.1	86
7.6 Radar Report Generator	88
7.6.1 Validation Test and Data Dump Routines	89
7.6.2 Diagnostic Routines	95
7.7 Time-of-Year Receiver	100
7.1 Validation Test and Data Dump Routines	100
7.7.2 Diagnostic Routine No.1	102
7.8 Random Number Generator	104
7.8.1 Validation Test and Data Dump Routine	106
7.8.2 Diagnostic Routine No. 1	106
7.9 Missing Interrogation Timer	107
7.9.1 Validation Test and Data Dump Routines	108
7.9.2 Diagnostic Routine No.1	110
7.10 Stu Uplink Transmitter	112
7.10.1 Validation Test and Data Dump Routines	113
7.10.2 Diagnostic Routines	116
7.11 Stu Downlink Receiver	121
7.11.1 Validation Test and Data Dump Routines	122
7.11.2 Diagnostic Routine No.1	126
7.12 Receiver Analog Subsystem	128
7.12.1 Validation Test and Data Dump Routines	130
7.12.2 Data Base Generation Routine	136
7.13 MRG Analog Subsystem	140
7.13.1 Validation Test and Data Dump Routines	141
7.13.2 Diagnostic Routine	148
7.14 FRG Analog Subsystem	154
7.14.1 Validation Test and Data Dump Routines	156
7.14.2 Diagnostic Routine	162

LIST OF ILLUSTRATIONS

Figure		Page
4-1	ARIES Maintenance Menu Structure	4
4-2	ARIES Maintenance Menu Option Screen	5
4-3	Second Level Menu General Structure	5
4-4	Validation Test and Data Dump Menu General Structure	6
5.1-1	System Switch Panel	10
5.2-1	I/O Switch Panel	12
5.2-2	System Switch Panel	12
5.3-1	I/O Bus Switch Conselette	15
5.3-2	Terminal Switching Unit	16
5.3-3	Layout of Distribution Panel	19
5.3-4	Maintenance Program Termination Screen	21
6-1	Selecting the Receiver Maintenance Menu Screen	22
6-2	Selecting the Receiver Validation Test Selection Menu Screen	23
6.1-1	Running the Azimuth Generator Logic Test	24
6.1-2	Running the Azimuith Generator Logic Test Data Dump	25
7.1.1-1	Summary Log Menu Screen	30
7.2-1	Uplink Receiver Board Option Screen	31
7.2.2-1	Uplink Receiver Command List	36
7.3-1	MRG Maintenance Menu Screen	38
7.3.1-1	MRG Validation Test Menu Screen	39
7.3.1-2	MRG Digital Configuration	40
7.3.2.2-1	Sample Format of CHGREPLY Option Screen	53
7.4-1	FRG Maintenance Menu Screen	57
7.4.1-1	FRG Validation Test Menu Screen	59

LIST OF ILLUSTRATIONS (CONTINUED)

Figure		Page
7.4.1-2	FRG Digital Configuration	60
7.4.2.4-1	Sample Format of CHGREPLY Option Menu	76
7.4.4-1	FRG Statistics menu Screen	81
7.5-1	UIT Option Screen	83
7.5.1.1-1	UIT Block Diagram	85
7.6-1	RRG Option Screen	88
7.6.1-1	RRG Validation Test Menu Screen	89
7.6.1-2	RRG Digital Configuration	91
7.6.2.2-1	RRG Disseminated Status Report	99
7.8-1	RNG Option Screen	105
7.9.1-1	MIT Validation Menu Screen	108
7.10-1	Uplink Transmitter Board Option Screen	113
7.10.1-1	STU Transmitter Test Menu Screen	114
7.10.2.2-1	Interrogation Type Selection Menu	121
7.11-1	STU Downlink Receiver Board Option Screen	122
7.12-1	Receiver Loop Maintenance Menu Screen	129
7.12.1-1	Receiver Loop Validation Test Menu Screen	130
7.12.1-2	Receiver Analog Subsystem Block Diagram	132
7.12.1.1-1	Sample of ATCRBS Digital Path Test Data Dump	133
7.12.1.2-1	Sample of ATCRBS/Mode S Digital Path Test Data Dump	134
7.12.1.3-1	Sample of ATCRBS Analog Path Test Data Dump	135
7.12.1.4-1	Sample of ATCRBS/Mode S Analog Path Test Data Dump	136
7.12.2-1	Receiver Loop Data Base Generation Menu Screen	137
7.12.2-2	Interrogation Data Base Generation Menu	137
7.12.2-3	Interrogation Data Base Print Menu	138

LIST OF ILLUSTRATIONS (CONTINUED)

Figure		Page
7.12.2.1-1	ATCRBS Interrogation Types	138
7.12.2.2-1	Mode S Interrogation Types	139
7.13-1	MRG Analog Subsystem Option Screen	140
7.13.1-1	MRG Analog Loop Validation Test Menu Screen	141
7.13.1.1-1	Sample of MRG Reply Monopulse Test Data Dump	144
7.13.1.2-1	Sample of MRG Reply Power Test Data Dump	145
7.13.1.3-1	Sample of Reply Code Test Data Dump	147
7.13.2.2-1	Sample Format of MRG CHGREPLY Option Menu	151
7.14-1	FRG Analog Subsystem Option Screen	155
7.14.1-1	FRG Loop Validation Test Menu Screen	156
7.14.1.1-1	Sample of FRG Reply Monopulse Test Data Dump	159
7.14.1.2-1	Sample of FRG Reply Power Test Data Dump	160
7.14.1.3-1	Sample of FRG Reply Code Test Data Dump	163
7.14.2.2-1	Sample Format of FRG CHGREPLY Option Menu	166

EXECUTIVE SUMMARY

The Aircraft Reply and Interference Environment Simulator (ARIES) is a stand-alone target simulator designed and fabricated at the Federal Aviation Administration (FAA) Technical Center to analyze the performance characteristics of the Mode Select (Mode S) Beacon System Sensor operating within capacity and high density beacon environments. A total of four ARIES systems have been fabricated to support the development of the Mode S Sensors during production phases and to support acceptance tests by the FAA.

Volume I of the ARIES Hardware Maintenance Manual delineates the loading and execution of the ARIES Hardware Maintenance Software Package, the description of all validation tests, the operational standards against which the tests are considered successful, and the description of all trouble shooting diagnostics, which make up the maintenance package.

1. INTRODUCTION.

This document is a general user's guide for the Aircraft Reply and Interference Environment Simulator (ARIES) Hardware Maintenance Software Package. It is written for system maintenance personnel responsible for maintaining and certifying the ARIES special purpose hardware designed and fabricated by Federal Aviation Administration (FAA) Technical Center personnel. The maintenance and certification of off-the-shielf equipment, such as, computer systems, printers, disk drives, etc., is covered by the appropriate manufactures maintenance manuals and will not be discussed in this document.

This manual provides the user with information on loading the maintenance package and on running all of the routines contained within the package. These routines include validation tests, validation data dumps, and diagnostics. Each routine is described in detail to provide enough background information for a user, experienced in digital and analog hardware, to investigate hardware problems with the assistance of hardware drawings. In addition, text files exist in the package which summarize the purpose and functions of each routine as a quick reference.

Section 2 provides a general background of the ARIES. Section 3 lists the referenced documents. Section 4 provides the user with an overall description of the maintenance software package developed for the ARIES. In this section the user is familiarized with the common menu structures encountered along with the type of routines available on these menus. Section 5 details standard and alternate loading procedures of the ARIES starting at the power on state to full loading of the maintenance package. Section 6 illustrates how to select and run any routine and section 7 describes the functions and uses of all of the routines contained in the package.

Appendix A contains a complete summary log printout of an ARIES System Validation Run and Data Dump. Appendix B contains a complete System Validation Data Dump. Appendix C contains the complete listing of all of the Help Text files contained within the ARIES Maintenance Package. Appendix D contains the data formats used by each of the special purpose devices. Appendix E describes the communication link between the ARIES and the Self Test Unit. Appendix F describes the procedure to run the maintenance package from a remote location.

2. BACKGROUND.

The FAA is currently improving the National Airspace System to keep pace with the projected traffic growth through the year 2000. One major element in this improvement effort is the deployment of a new secondary radar system referred to as the Mode Select (Mode S) Beacon System. The Mode S System sensor works in conjunction with airborne transponders to obtain information on aircraft identity and altitude, and serves as the basis for digital communications between the ground system and the aircraft.

In 1986, the FAA awarded a contract for the procurement of 137 Mode S Sensors to be installed in the busier air traffic locations. Because the Mode S is a new technology ground-based surveillance system, the FAA recognized the necessity

for a target capacity simulator to test the Mode S Sensor performance to specified capacity and high density traffic environments. This was the primary reason for the development and fabrication of the ARIES systems.

Four ARIES systems will be provided as government furnished property to the Mode S Sensor production contractors, Westinghouse and Unisys. The systems will be used to simulate, at the radio frequency (RF) level, capacity, and high density aircraft and interference loading environments to the Mode S Sensors during tests required by the following paragraphs of FAA-E-2716:

a. 4.3.2 Contractor's preliminary tests.

b. 4.3.3 Design Qualification tests.

c. 4.3.4 Type tests.

d. 4.4.2.3 Hardware/Software Integration tests.

This makes the ARIES an important link in the successful implementation of the Mode S Beacon System.

Because of the major roll the ARIES will play in supporting the Mode S Beacon System Sensor production contract, ARIES reliability and maintainability was an important concern. These concerns were addressed during the design and fabrication phases of the ARIES project.

To insure a reliable ARIES system, computer equipment meeting high reliability standards were chosen as the nucleus for which ARIES would be built around. The ARIES special purpose hardware was packaged in a separate cabinet to that of the computer equipment with only two interface buses connected between them. Both of these buses are buffered using drivers and receivers to isolate the respective equipment for further protection. Also, this provided quick disconnection of the ARIES hardware with the computer to isolate problems on one side or the other. Implementation of large scale integration design techniques were used to extensively reduce the number of chips in the system and synchronous logic design techniques were maintained through all of the digital hardware.

Modular packaging of the special purpose hardware, specifically in the analog area, was selected as the best approach to achieve a high degree of system maintainability. The packaging technique allowed easy removal of boards or panels for repair or, when spares are available, replacement. Also, a complete set of spares is available with each system for all of the boards in the ARIES digital chassis and the seven intermediate frequency (IF) reply generator panels in the analog chassis to minimize system down time if a hardware failure should occur. Spare components for long lead items are available as well. An independent Self Test Unit (STU) incorporated in the ARIES supports checkout of the analog hardware.

A comprehensive validation and diagnostic software package was developed to detect and isolate hardware failures to a particular module and help debug failures once found. It is that software package that is described in this manual.

3. RELATED DOCUMENTS.

a. Goon, M. and Spencer, O. A., The Aircraft Reply and Interference Environment Simulator (ARIES), FAA-RD-78-96, March 22, 1979.

b. Mode Select Beacon System (Mode S) Sensor Specifications, FAA-E-2716, March 24, 1983.

c. U.S. National Standard for the IFF Mark X (SIF) Air Traffic Control Radar Beacon System (ATCRBS) Characteristics, FAA Order 1010.51A, March 8, 1971.

d. U.S. National Standard for the Mode Select Beacon System, FAA Order 6365.1A, January 3, 1983.

e. The Aircraft Reply and Interference Environment Simulator (ARIES) Hardware Principles of Operation: Volumes I and II, DOT/FAA/CT-TN88/4 (to be published)

4. MAINTENANCE PROGRAM OVERVIEW.

The ARIES Maintenance Package is the primary software test tool used in debugging and verifying the special purpose hardware developed for the ARIES. All of the validation test routines, validation data dump routines, diagnostics, and associated help text files are assembled in one package for easy access.

The ARIES Maintenance Package is a menu driven program containing three levels of option menus as shown in figure 4-1. These menus provide the user with a wide degree of flexibility in running validation tests, data dumps, and diagnostics. The first level menu referred to as the system menu is shown in figure 4-2 as it appears on the control screen. From this menu, labelled "ARIES Maintenance Menu," the user can run a complete ARIES validation test, generate a complete ARIES validation data dump sequence, or select any second level menu.

There are 13 similarly structured second level menus. The general structure of these menus is depicted in figure 4-3. Ten of the menus are associated with the devices. Here the devices refer to the digital devices which perform specific ARIES functions. The remaining three menus are associated with the analog subsystems.

The ten digital devices and the three analog subsystems are listed in table 4-1.

From a second level menu the user can return to the system menu via the exit option or access a third level menu. A help text file is included to clarify all of the options available to the user.

Referring back to figure 4-1, a third level menu is either a validation test selection menu, a validation data dump selection menu, or a diagnostic menu. In some cases, one or more of these type menus may not exist for a particular device or subsystem. The validation test and data dump menus are structured similarly, providing the user the flexibility of running the routines individually or as a set. Figure 4-4 shows the general structure of the validation menus. These menus

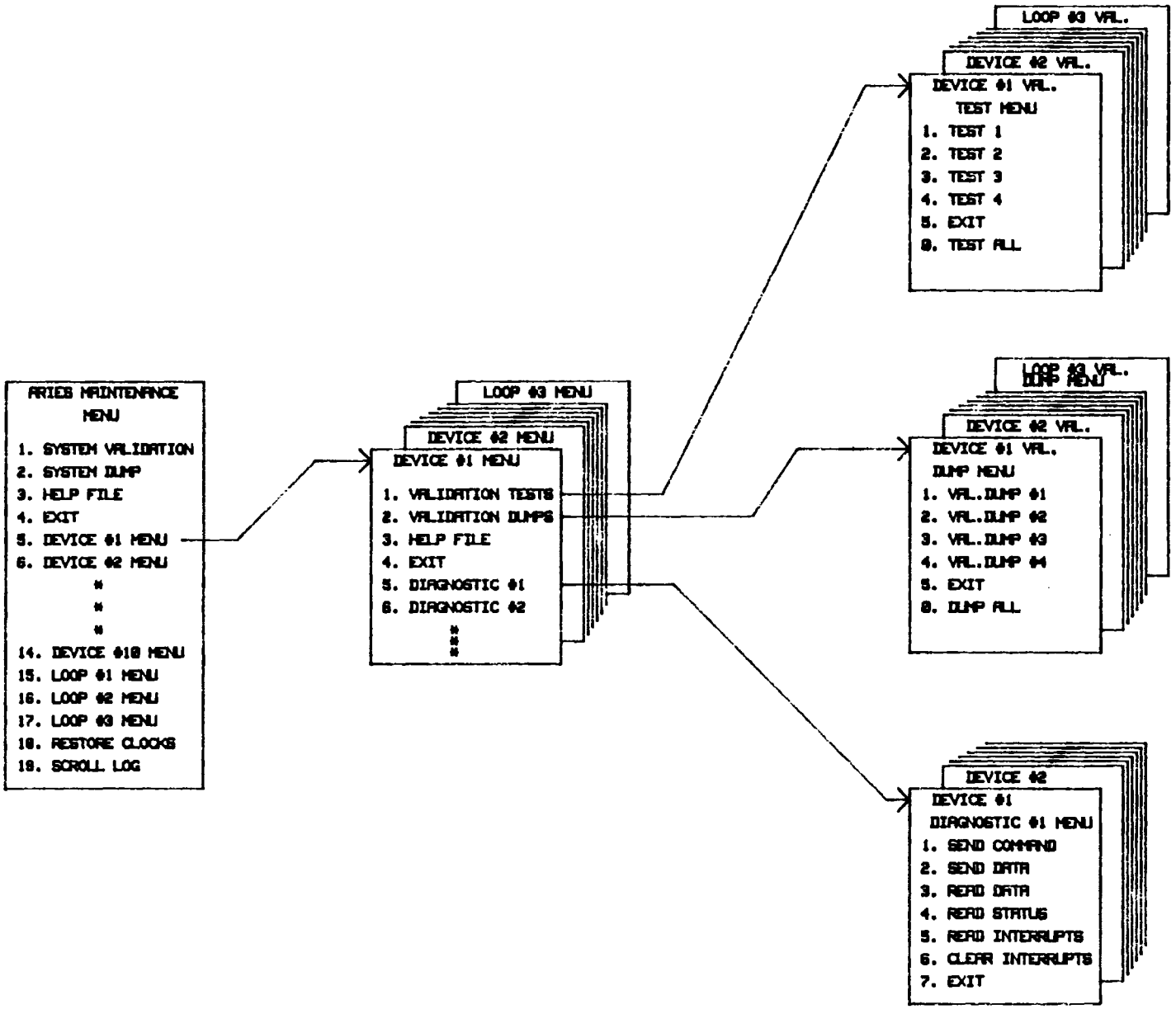

FIGURE 4-1. ARIES MAINTENANCE MENU STRUCTURE

list all the available routines, exit option (return to the second level menu), and the select all options (default) which executes all routines in the order of their appearance on the menu including the exit option.

```
        ADIAG:
        ADIAG:  ************************************
        ADIAG:  ****    ARIES MAINTENANCE MENU    ****
        ADIAG:  ************************************
        ADIAG:
        ADIAG:     1 - ARIES VALIDATION
        ADIAG:     2 - VALIDATION DUMP
        ADIAG:     3 - HELP
        ADIAG:     4 - EXIT
        ADIAG:     5 - RECEIVER
        ADIAG:     6 - MRG
        ADIAG:     7 - FRG
        ADIAG:     8 - UIT
        ADIAG:     9 - RRG
        ADIAG:    10 - TOY
        ADIAG:    11 - RNG
        ADIAG:    12 - MIT
        ADIAG:    13 - STU TX
        ADIAG:    14 - STU RCVR
        ADIAG:    15 - RCVR ANALOG LOOP
        ADIAG:    16 - MRG ANALOG LOOP
        ADIAG:    17 - FRG ANALOG LOOP
        ADIAG:    18 - CLOCKS
        ADIAG:    19 - SUMMARY LOG
    ADIAG>
```

FIGURE 4-2. ARIES MAINTENANCE MENU OPTION SCREEN

```
*****************************
***       DEVICE MENU     ***
*****************************
  1 - VALIDATION
  2 - DUMP
  3 - HELP
  4 - EXIT
  5 - DIAG #1
```

FIGURE 4-3. SECOND LEVEL MENU GENERAL STRUCTURE

TABLE 4-1. ARIES DIGITAL DEVICES AND ANALOG SUBSYSTEMS

ARIES:	Uplink Receiver/Azimuth Generator-Decoder
	Modeled Reply Generator
	Fruit Reply Generator
	Radar Report Generator
	Time-of-Year Receiver
	Universal Interval Timer
	Random Number Generator
STU:	Uplink Transmitter
	Downlink Receiver
ANALOG SUBSYSTEMS:	
	Uplink Receiver
	Modeled Reply Generator
	Fruit Reply Generator

```
     ***   DEVICE VALIDATION   ***
1    - VALIDATION TEST (DUMP) #1
2    - VALIDATION TEST (DUMP) #2
"          "        "    "
n    - VALIDATION TEST (DUMP) #n
n+1  - EXIT
n+2  - ALL (DEFAULT)
```

FIGURE 4-4 VALIDATION TEST AND DATA DUMP MENU GENERAL STRUCTURE

4.1 VALIDATION TEST ROUTINES.

The ARIES Maintenance Package contains a total of 70 validation test routines. They are collected into 13 sets corresponding to the ARIES ten hardware devices and three analog subsystems, i.e., all of the validation routines that check the Uplink Receiver make up one set. These routines can be run as one complete sequence, as sets, or individually.

Validation routines are essentially GO/NO GO checks designed to verify ARIES hardware operations. They are fully automated routines requiring no user intervention once selected. The result of each test is recorded on the summary log file and is displayed concurrently on the response screen for on-line monitoring (refer to section 5 for the explanation of the control terminal and the response terminal).

The validation routines are designed to detect and isolate hardware failures at least to the board level or the device level, depending on which unit is smaller. If a hardware failure is detected, the user can take appropriate action to correct the problem. In most cases, this action will simply be to remove a bad digital board or IF reply generator panel and replacing it with a spare provided with each ARIES unit.

Each device used by a validation test routine is reset as soon as the routine is selected. Resetting the device places it in the normal mode of operation with its interrupts disarmed. This is done to insure that each device is in a known state prior to initializing test conditions. Also, at the conclusion of the validation test the device is again reset. This is to insure no device remains in a state that may interfere with the results of other validation tests.

All validation routines collect data, whether the data was originally sent to the device and read back or some specific events that were monitored and counted. The test data collected is then compared to the expected results and an error map is generated based on the comparison. Test data collected by the ARIES, along with the reference data and the error map, are stored on a disk file. Test data collected by the STU, along with the error map, are stored in reserved blocks of memory known as task common memory. This information is subsequently transmitted to the ARIES when requested by the appropriate data dump routine and stored on disk files. These files are referred to as data dump files.

Additional pertinent information is recorded with each test to identify the test, the time, and data the test was conducted, the ARIES unit under test, and the maintenance program revision used. Each time a test is run, the old data is over written.

The validation tests are described in detail in section 7.

4.2 VALIDATION DATA DUMP ROUTINES.

For every validation test routine there is a corresponding validation data dump routine. These routines provide the means of accessing test information collected by validation tests. Typically, the test information consists of test data read back from the device, reference data, and error information if errors should occur. The test information is dumped either to a line printer for a hard copy or the response screen for immediate review. This option is selectable, allowing flexibility to quickly evaluate and track down potential hardware failures.

The format of all validation dumps is similar. An opening line is printed showing the device under test, the validation test that was run, and the date and time of the run. The test information is listed in a easily readable format with all necessary labels to clarify what is being reviewed. All errors are highlighted using asterisks (***). After all of the test information is listed a closing line is generated repeating the device under test, the result of the validation test, and the date and time of the run. The opening and closing lines are used to bracket the data dump which, in some cases, may contain as many as 20 sheets of data. A listing of the ARIES System Dump is presented in appendix B.

4.3 DIAGNOSTIC ROUTINES.

Diagnostic routines are used primarily to debug and track down hardware problems after they are detected by validation routines. Diagnostics very widely in their purpose and operations. Some diagnostics are completely manual requiring total interaction with the user, while other diagnostics are semiautomated requiring little interaction. Still others are used to build reference data files used subsequently by validation routines.

At lease one diagnostic routine exists for each digital device. This routine is the Diagnostic No. 1 routine found on each device (second level) menu. It provides the user with complete manual control over the device and assumes that the user has a thorough working knowledge of the hardware. The user can program illegal and/or undefined hardware states, so care must be taken when running these diagnostics. Generally the functions available to the user include the following:

a. Output a command to a device.

b. Read device status.

c. Output data to a device.

d. Read data from a device.

e. Display interrupt count of a device.

f. Reset interrupt count of a device.

Detailed discussions on each diagnostic is covered on section 7.

4.4 HELP TEXT FILES.

The help text files are provided to assist the user in the smooth execution of the many options available within the maintenance package. These files are found on the first and second level menus and contain narrative descriptions of each routine listed on that menu. A complete listing of the help text files is shown in appendix C.

(Note: the help text files are provided as a quick reference guide for the user. They are not intended to replace this manual but rather to refresh the user with all of the options available.)

5. SYSTEM STARTUP.

Normally, the ARIES Maintenance package is run with both the ARIES 3230 processor and the STU 3205 processor in the operational mode. The operational mode is understood to be that both systems have been "booted up" and that the neccessary software has been loaded into the respective computer.

In the operational mode, all of the ARIES maintenance routines can be utilized. This allows the user to access all of the validation and diagnostic routines of

the ARIES digital devices (Sections 7.2 through 7.9), the STU digital devices (sections 7.10 and 7.11), and the analog subsystems (sections 7.12, 7.13 and 7.14).

A second mode of operation is available when using the ARIES Maintenance package. This mode allows the user to run validation and diagnostic routines on the ARIES digital devices if the STU 3205 is not booted. The restriction in running in this mode is that the validation and diagnostic routines for the STU digital devices and the analog subsystems are disabled.

Section 5.3 describes the process for selecting one of the two operational modes.

It should be noted that it does not matter whether the 3230 or the 3205 is booted first, as long as the ARIES Maintenance package is loaded and started after the 3205 has become operational.

5.1 ARIES BOOTUP PROCEDURE.

The following procedure should be used to boot the Concurrent 3230 computer:

a. Ensure that there is power to the system:

1. The "READY" light on the disk drive should be lit (the circuit breaker is on the back of the unit).

2. The "POWER A" light on the Input/Output Bus Switch Conselette (see figure 5.1-1) should be lit (the key switch needs to be in the "ON" position).

3. The "CPU POWER READY" light on the system switch panel should be lit (the key switch needs to be in the "ON" position).

b. Ensure that the 3230 computer has access to the disk drive. Ensure that the disk drive is not marked on to the 3205 computer. Note that marking the disk drive on to both the 3205 and the 3230 at the same time may cause an erasure of the disk.

Only channel "A" is used in the ARIES configuration so the switch positions under the headings SEL CMN B and SEL CMN C do not need to be set.

The switches under the heading SEL CMN A should be set as follows:

1. The MAN/AUTO switch panel should be set to "MAN".

2. J2 should be set to "30".

3. J3 should be set to "30".

c. Make sure the console terminal switch is placed into the "3230 Con." position. Note: the left switch is for the 3230, the right switch is for the 3205.

d. Now put the processor in the boot mode. The system switch panel for the 3230 is located on the top of the middle cabinet. Then:

1. Put the key switch in the "ON" position.

2. Put the "ENABLE/DISABLE" switch in the "ENABLE" position.

3. Press the "INT" switch.

```
SINGLE HALT/RUN ENABLE   INT                CPU    SYSTEM
 !  !    !  !    !  !    !  !   LOCK       POWER  POWER  WAIT  READY
 !  !    !  !    !  !  IPL!  !   ON         O      O      O     O
 !  !    !  !    !  !    !  !   STANDBY    READY  FAIL
 !  !    !  !    !  !    !  !
                DISABLE
```

FIGURE 5.1-1. SYSTEM SWITCH PANEL

e. The 3230 system console should now have the boot screen displayed. If the boot screen is not present repeat step d.

e. The 3230 system console should now have the boot screen displayed. If the boot screen is not present repeat step d.

```
CONCURRENT COMPUTER CORPORATION            IPL 06-2 8F02R05
    All Rights Reserved                     Copyright 1986

Basic Confidence Test Complete

Load Menu:
** Code  Address   Description            Code  Address   Description
1   2A  OFC OFB OFO CDD 50R            2   2B  OFC OFB OFO CDC 50F
3   2C  OFC OFB OFO MSM 300F           4   35  OFC OFB OFO MSM 80R
5   36  OFC OFB OFO MSM 300R           6   38  OFC OFB OFO MSM 80F W/HPT
7   3A  OFC OFB OFO MSM 80F            8   3B  OFC OFB OFO CDD 32/64/96R
9   3C  OFC OFB OFO CDD 32F            10  3D  OFC OFB OFO CDD 64F
11  3E  OFC OFB OFO CDD 96F            12  3F  OFC OFB OFO HPD 368F
13  3F  OFC OFB OFO MSM 825F           14  3F  OFC OFB OFO HPD 850F
15  3F  OFC OFB OFO DISK OTHER         16  41  OC5     OFO TAPE 1600

Enter 0 for interactive session or ? for HELP.
Entry =
```

The response to "Entry =" is 3 if the ARIES is Unit No. 1 or 4 or 0 if the ARIES is Unit No. 2 or 3; followed by pressing the RETURN key. If 0 is entered, the following sequence should be executed:

O.S. DEVICE CODE = 36 (return)
DEVICE ADDRESS = FD (return)
CONTROLLER ADDRESS = FB (return)
SELCH ADDRESS = FO (return)

f. At this point, the system response with:

```
VOLUME = MT7A
FILENAME =
```

The user enters ARIES82.OS and presses the RETURN key.

g. The system now does a memory check. The expected response is:

```
TESTING MEMORY
STARTING LOAD
LOAD COMPLETE

OS32MT08-01.ARIES81.    LICENSE F-0073
MEMORY TEST IN PROGRESS
END OF MEMORY TEST
UNAVAILABLE MEMORY BLOCKS = 0
```

h. Next the system will ask the user to enter the date and time shown in the following sequence:

```
*SET DATE & TIME, ENTER:  SET TIME MM/DD/YY, HH:MM:SS
*THEN HIT RETURN AND ENTER:  $CONTINUE
```

i. The system will now attempt to mark the disk drive on-line. If the system encounters an error while attempting to mark the disk on-line it automatically loads and start "FASTCHEK". FASTCHEK is a system diagnostic that checks the disk for errors. This diagnostic can take a few minutes to run, however, be sure to stay alert and read any messages it displays on the system console. When FASTCHEK is complete you will get either the message DISC POSSIBLY DAMAGED GET HELP FAST!! or ARIES HARDWARE SYSTEM IS UP!!.

j. The system is not booted correctly until the message ARIES SYSTEM IS UP!! is displayed. If no message or any other message is received, get help, there is a problem.

5.2 SELF TEST UNIT BOOTUP PROCEDURE.

The following procedure should be used to boot the Concurrent 3205 computer:

a. Ensure that there is power to the system

1. The "READY" light on the disk drive should be lit (the circuit breaker is on the back of the unit).

2. The "POWER A" light on the I/O Bus Switch Conselette (see figure 5.2-1) should be lit (the key switch needs to be in the "ON" position).

3. The "CPU POWER READY" light on the system switch panel should be lit (the key switch needs to be in the "ON" position).

b. Ensure that the 3205 computer has access to the disk drive. Ensure that the disk drive is not marked on to the 3230 computer. Note: marking the disk drive on to both the 3205 and the 3230 at the same time may cause an erasure of the disk.

Only channel "A" is used in the ARIES configuration so the switch positions under the headings SEL CMN B and SEL CMN C do not need to be set.

The switches under the heading SEL CMN A should be set as follows:

1. The MAN/AUTO switch panel should be set to "MAN".

2. J2 should be set to "05".

3. J3 should be set to "05".

c. Make sure the console terminal switch is placed into the "CONSOLE" position. Note: the left switch is for the 3230, the right switch is for the 3205.

d. Now put the processor in the boot mode. The system switch panel (see figure 5.2-2) for the 3205 is located inside the middle cabinet. Then:

1. Put the key switch in the "ON" position.

2. Put the "ENABLE/DISABLE" switch in the "ENABLE" position.

3. Press the "INT" switch.

```
                    SEL CMN-A                          SEL CMN-B     SEL CMN-C
                                                 !  !   NOT    !  !   NOT
                                            POWER       USED          USED
      ____     ____     ____     LOCK        A
MAN  !  !    !30!     !05!  LOCK
     !  !    !  !     !  !   ON   O     O
AUTO !  !    !  !     !  !  OFF
     !  !    !05!     !30!
```

FIGURE 5.2-1. I/O BUS SWITCH CONSELLETTE.

```
SINGLE  HALT/RUN  ENABLE    INT                CPU    SYSTEM
 !  !    !  !     !  !     !  !   LOCK       POWER  POWER  WAIT  READY
 !  !    !  !     !  !  IPL!  !   ON          O      O      O     O
 !  !    !  !     !  !     !  !  STANDBY     READY  FAIL
 !  !    !  !     !  !     !  !
                 DISABLE
```

FIGURE 5.2-2. SYSTEM SWITCH PANEL

e. The 3205 system console should now have the boot screen displayed. If the boot screen is not present repeat step d.

```
BASIC TEST COMPLETE
3200 8KB LSU BOOTLOADER R01
DEVICE
MG85
MGC5
 .
 .
 .
OTHR
DEVICE=
FILENAME=
```

The response to the DEVICE= is D300.

The response to the FILENAME= STU81.OS for the 3205

f. The system will now do a memory check.

The expected result is:

```
MEMORY TEST IN PROGRESS
END OF MEMORY TEST
UNAVAILABLE MEMORY BLOCKS = 0
```

g. Next the system will ask you to set the date and time, follow the format:

```
SET TIME mm/dd/yy,hh:mm:ss <cr>
$CONTINUE <cr>
```

h. The system will now attempt to mark the disk drive on-line. When the system encounters an error while attempting to mark the disk on-line it will automatically load and start "FASTCHEK". FASTCHEK is a system diagnostic that will check the disk for errors. This diagnostic can take a few minutes to run, however be sure to stay alert and read any messages it displays on the system console. When FASTCHEK is complete you will get either the message DISC POSSIBLY DAMAGED GET HELP FAST!! or ARIES SYSTEM IS UP!!.

i. The system is not booted correctly until the message ARIES SYSTEM IS UP!! is displayed. If no message or any other message is received, get help, there is a problem.

5.3 MAINTENANCE PROGRAM LOAD/TERMINATION PROCEDURES.

The ARIES Maintenance Package can be loaded once the Concurrent computers, 3230 and 3205, have been properly booted (refer to sections 5.1 and 5.2 for the bootup procedures). Two separate programs, one loaded in the 3205, the CPU for the STU,

and one loaded in the 3230, the CPU for the ARIES, make up the ARIES Maintenance Package. The following procedure describes the loading of the complete maintenance package. If the maintenance is to run on ARIES hardware only, using no STU hardware devices, skip steps "a" through "e."

The STU Maintenance program load procedure:

a. Transfer the disk drive to the 3205. This is done at the I/O BUS Switch Conselette located on top of the peripheral cabinet. The layout of the conselette is shown in figure 5.3-1. Channel A labeled "SEL CMN A" is the only channel used and its switches should be set as shown below. Note, before changing the I/O BUS switches make sure that the disk drive is not mark on for the 3230.

1. Rocker switch "MAN/AUTO" should be set to its "MAN" position.

2. Rocker switch "J2" should be set to its "05" position.

3. Rocker switch "J3" should be set to its "05" position.

b. At the Terminal Switching Unit (TSU) set the "3205 CON:/TER2:" toggle switch to its up position to make the second terminal the 3205 system console (see figure 5.3-2). The TSU is generally located between the ARIES two display terminals.

c. Mark the disk dive on-line. At the 3205 system console enter MARK DSCA:,ON,,CD=ALL if the ARIES is Unit No. 1 or 4, or enter MARK_ DSC3:,ON,,CD=ALL if the ARIES is Unit No. 2 or 3; then press the RETURN key. Note the letters underlined are the abbreviations that the system will accept. A system prompt (*) should appear on the console screen indicating that the disk drive is now marked on. To verify that the disk drive is properly on-line enter DISPLAY DEVICES then press the RETURN key. The list of all of the computer devices will appear on the control screen with the words MT7A CDIR appearing after DSCA if the ARIES is Unit No. 1 or 4, or after DSC3 if the ARIES is Unit No. 2 or 3.

d. Next enter the following command substitution string (CSS) named "STUTASK" at the 3205 system console and press the RETURN key. This CSS loads the STU maintenance program into the STU memory from the disk drive. The following sequence should appear on the 3205 system console screen:

```
*
* STUTASK.TSK loaded and initiated.
*
* Mark off disk & switch 3205 CON:  over to TER2:  and start ADIAG
*
*          - - - - - - - - - - - - - - - -
*
* Task $ execute FIXPIC05.TSK upon an abnormal termination
* of ADIAG, this must be done to restore/reset the 3205 (STU).
*
```

e. Now mark the disk drive off-line. At the 3205 system console enter MARK DSCA:,OFF if the ARIES is Unit No. 1 or 4, or enter MARK_ DSC3:,OFF if the ARIES is Unit No. 2 or 3, then press the RETURN key. A system

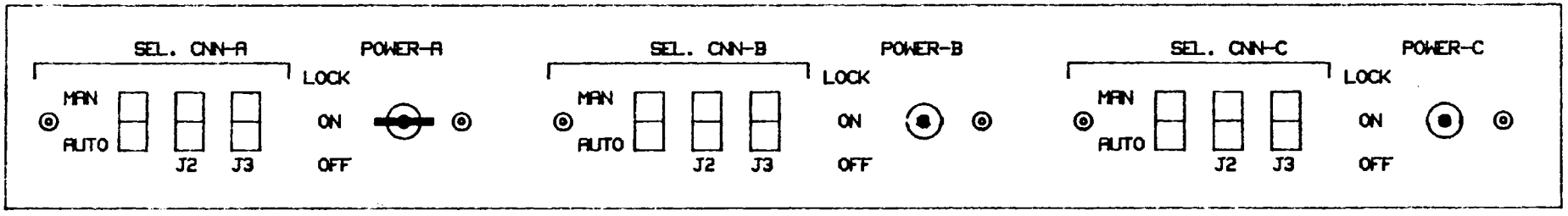

FIGURE 5.3-1. I/O BUS SWITCH CONSELETTE

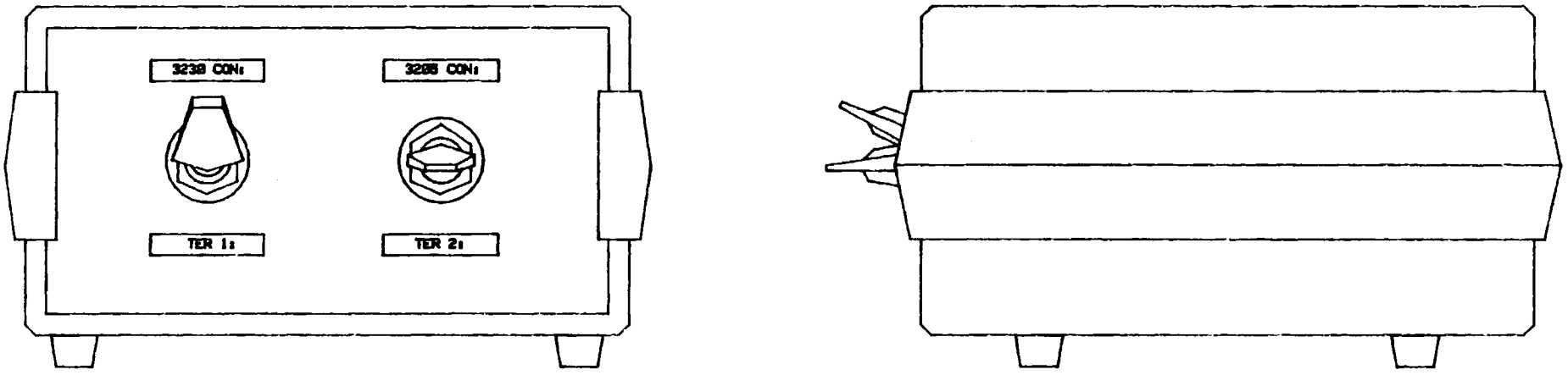

FIGURE 5.3-2. TERMINAL SWITCHING UNIT

prompt (*) should appear on the console screen indicating that the disk drive is now marked off. To verify that the disk drive is marked off the same procedure given in step "c" is used. The word OFF should appear after the three types of disk drives as shown below.

```
DSC3  FD  0000  OFF
DSCA  FC  0000  OFF
DSCB  FE  0000  OFF
```

The ARIES Maintenance program load procedure:

f. Transfer the disk drive to the 3230. This is done at the I/O BUS Switch Conselette located on top of the peripheral cabinet. Channel A "SEL CMN A" switches should be set as follows:

1. Rocker switch "MAN/AUTO" should be set to its "MAN" position.

2. Rocker switch "J2" should be set to its "30" position.

3. Rocker switch "J3" should be set to its "30" position.

g. At the TSU set the "3230 CON:/TER1:" toggle switch to its up position to make the first terminal the 3230 system console; set the "3205 CON:/TER2:" toggle switch to its down position to switch the second terminal to the 3230 for use during the maintenance session. See section 5.3.1 for information on selecting screen options.

h. Mark the disk dive on-line and verify that the disk drive is marked on. The same procedure given in step "c" is used at the 3230 system console. A system prompt (*) should appear on the console screen indicating that the disk drive is now marked on.

i. Next enter the CSS named "ADIAG" at the 3230 system console then press the RETURN key. The following information appears on the 3230 system screen:

<u>ADIAG return</u>

```
CHECKOS:  END OF TASK     0
KILLTASK:  END OF TASK     0
.SPL:  END OF TASK   255
.MTM:  END OF TASK   255
COMMUX05:  STOP
COMMUX05:  END OF TASK   255
.SPL:  PERKIN-ELMER OS/32 SPOOLER 03-152 R03-01
LPFM3230:  MODELS 3220/30/40/50 WCSLPFM 03-479R00 F09
INITCOM:  END OF TASK     0
LPFM3230:  WCS LOADED
LPFM3230:  END OF TASK   255
FIXWCS:  END OF TASK     0
SVPICPTR:  ****    PIC ISR POINTER STORED    ****
SVPICPTR:  END OF TASK     0
ADIAG:
ADIAG:  Is STUTASK.TSK active on the 3205? (Y/[N])
ADIAG:
```

```
ADIAG>Y return
     ADIAG:
     ADIAG:  ****    HARDWARE DEVICES DISARMED AND RESET    ****
     ADIAG:
     ADIAG:  ******************************************
     ADIAG:  ***  REMOVE EXTERNAL RCVR & TOY CABLES    ***
     ADIAG:  ***  WHILE ARIES VALIDATION IS RUNNING    ***
     ADIAG:  ******************************************
     ADIAG:
     ADIAG:  <HIT RETURN TO CONTINUE>
ADIAG>
```

The program prompts the user to determine if the STU maintenance program is active. When the STU maintenance program is not loaded, enter N for no and press the RETURN key. Otherwise the ARIES maintenance program will lock up trying to communicate with the STU maintenance program.

After the first query is answered the next message appears on the control screen. The purpose of this message is to remind the user that the interrogation RF cables and the Time-of-Year cables should be removed before running the ARIES validation tests. The distribution panel is located at the back of the ARIES expansion cabinet and the connectors are clearly labled. These cables are removed at the distribution panel to avoid receiving external inputs that would interfere with the successful execution of several validation tests. Figure 5.3-3 illustrates the layout of the distribution panel. Note that the interrogation RF cables could remain connected if the user has determined that no interrogations are being received over these cables. Once the prompt is answered the ARIES system menu appears on the system console as shown in figure 4-2. The system console is now referred to as the control terminal and control screen.

The ARIES Maintenance Package termination procedure is as follows:

a. Return to the system menu (refer to figure 5.3-4).

b. Select the "EXIT" option by typing 4 and pressing the RETURN key. This initiates the termination sequence with the first of three prompts appearing on the control screen.

c. The first prompt asks whether all hardware devices are to be disarmed and reset prior to exiting the program. If this is desired type YES then press the RETURN key. This executes a routine that resets all of the ARIES hardware devices including the STU hardware devices if the STU maintenance program is active. If the state or conditions of the hardware devices are to remain unchanged when exiting the program, type NO then press the RETURN key.

d. The second query appears on the control screen and asks whether the STU maintenance program should be terminated. If the program is to be terminated type YES then press the RETURN key. If the program is not to be terminated type NO then press the RETURN key.

e. The third query appears on the control screen and asks whether a hard copy of the summary log is to be generated. If a copy of the maintenance summary

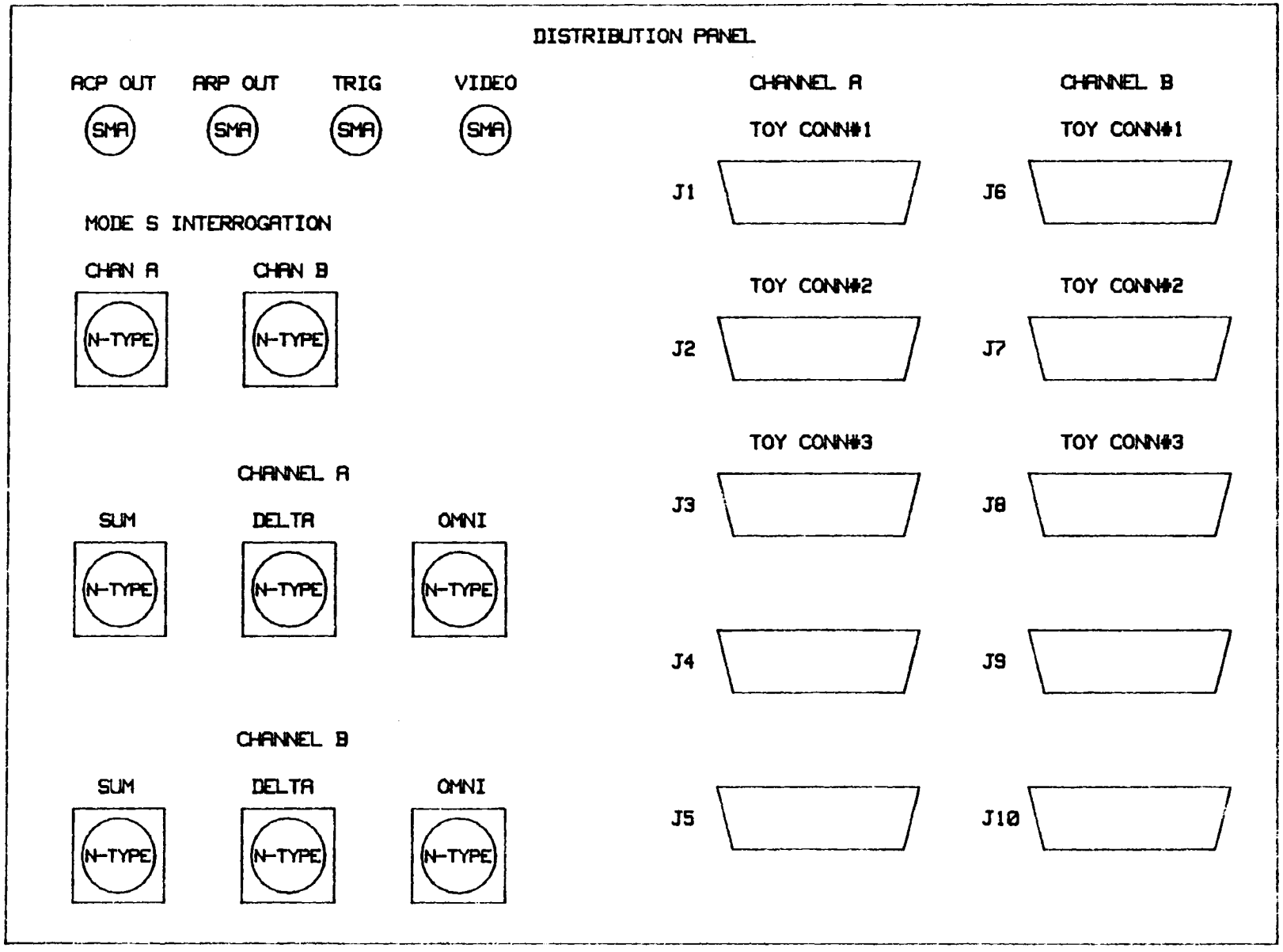

FIGURE 5.3-3. LAYOUT OF DISTRIBUTION PANEL

log is needed type YES then press the RETURN key. Note, prior to this you should make sure the line printer is on-line. The summary log will then be printed. If no copy is necessary type NO then press the RETURN key.

f. At this point a message appears on the control screen reminding the user to reconnect cables previously removed to run validation tests. Once these cables are reconnected the user presses the RETURN key to continue.

g. When all three questions have been answered the termination sequence continues. The ADIAG task is ended and the system is restored to its normal configuration. The ISR pointer for the PIC is restored to support OS/32 operation. In addition, the multi terminal-monitoring and the spooler tasks are loaded automatically.

5.3.1 Screen Option.

The user has the option of running the maintenance program in a dual screen or a single screen mode at the time the program is loaded. Generally, the dual screen mode is used to improve the readability of information displayed and help user interaction through the program. In the dual screen mode the system console, referred in this text as the "control terminal," displays the various menus as the user moves through different levels within the program. The terminal screen, referred in this text as the "response terminal," displays the Summary Log file for on-line monitoring. Also, the response terminal is used to review validation data dump files and help text files when requested. The single screen mode is typically used in remote operations over a single modem link or when only one terminal is available.

The screen option is selected as follows:

a. If the dual screen mode is to be used when running the maintenance program the user would type "ADIAG TER2:" followed by pressing the RETURN key. The parameter TER2: is entered after the ADIAG CSS specifies the terminal to be assigned as the response terminal. If no parameter is entered, that is only "ADIAG" is typed, the program automatically assigns terminal No. 2 as the response terminal by default.

b. If the single screen mode is to be used when running the maintenance program the user must type "ADIAG CON:" followed by pressing the RETURN key. Since the system console is CON:, it would be assigned as the response terminal in addition to being the control terminal.

6. RUNNING MAINTENANCE ROUTINES.

The user makes a selection on any menu by entering the number that appears in front of the option and pressing the RETURN key. For example, if the user is at the system menu and wants access to the device menu for the Uplink Receiver, he would enter at the control terminal a "5" then press the RETURN key as illustrated in figure 6-1. The Uplink Receiver Maintenance Menu then appears on the control screen. If the user types a number that is not an option number and presses the RETURN key the same menu will reappear and prompt the user to try again.

```
      ADIAG:  ************************************
      ADIAG:  *****   ARIES MAINTENANCE MENU   *****
      ADIAG:  ************************************
      ADIAG:     1 - ARIES VALIDATION
      ADIAG:     2 - VALIDATION DUMP
      ADIAG:     3 - HELP
      ADIAG:     4 - EXIT
      ADIAG:     5 - RECEIVER
      ADIAG:     6 - MRG
      ADIAG:     7 - FRG
      ADIAG:     8 - UIT
      ADIAG:     9 - RRG
      ADIAG:    10 - TOY
      ADIAG:    11 - RNG
      ADIAG:    12 - MIT
      ADIAG:    13 - STU TX
      ADIAG:    14 - STU RCVR
      ADIAG:    15 - RCVR ANALOG LOOP
      ADIAG:    16 - MRG ANALOG LOOP
      ADIAG:    17 - FRG ANALOG LOOP
      ADIAG:    18 - CLOCKS
      ADIAG:    19 - SUMMARY LOG
ADIAG> 4 return
      ADIAG:  DISARM AND RESET HARDWARE DEVICES ([Y]/N) ???
ADIAG> Y return
      ADIAG:  ****    HARDWARE DEVICES DISARMED AND RESET
      ADIAG:  TERMINATE STUTASK.TSK ON THE 3205 (Y/[N]) ???
ADIAG> Y return
      ADIAG:  OUTPUT SUMMARY TABLE TO PRINTER (Y/[N]) ???
ADIAG> Y return
      ADIAG:  ******************************
      ADIAG:  *** RECONNECT EXTERNAL RCVR ***
      ADIAG:  ***   & TOY CABLES          ***
      ADIAG:  ******************************
      ADIAG:  <HIT RETURN TO CONTINUE>
ADIAG> return
      ADIAG:  END OF TASK     0
      RECPOINT:  END OF TASK   255
      FIXCLOCK:
      FIXCLOCK:  CLOCKS RESTORED TO OS/32
      FIXCLOCK:
      FIXCLOCK:  STOP
      FIXCLOCK:  END OF TASK     0
      CONADIAG:  END OF TASK   255
      CHGREPLY:  END OF TASK   255
      PARM-ERR POS=.MTM
      .MTM:OS/32 TERMINAL MONITOR 08-01
*********************************************************
*****      ...ARIES MAINTENANCE COMPLETED...         *****
*****       ...MTM AND SPOLLER RESTORED ...          *****
*********************************************************
 *
```

FIGURE 5.3-4. MAINTENANCE PROGRAM TERMINATION SCREEN

Choosing an option on a second level menu is done the same way as choosing an option on the system menu. If the user wants access to the validation test selection menu, he would enter "1" and press the RETURN key as illustrated in figure 6-2 for selecting the Uplink Receiver validation test selection menu. The validation test selection menu appears on the control screen and prompt the user for the next entry. If the user wants access to the validation data dump selection menu, review the help text file, or to return to the system menu, options "2", "3" and "4," respectively, on any second level menu, he would enter the number preceeding that option. Likewise, access to a diagnostic routine or data base generation routine is done the same way.

The following sections provide enough background information to run any of the routines contained within the ARIES Maintenance Package. Section 6.1 explains how to run the validation test selection menus and the validation data dump selection menus. Section 6.2 deals with how to use the help text files. Section 6.3 explains how to run the device diagnostic No. 1 routines. Since other diagnostic routines vary widely in their operations and functions they are only briefly covered in this section. This includes the special purpose routines such as data base generation routines and the FRG statistics routine. The functions of each diagnostic routine is dealt with separately in section 7.

```
        ADIAG:
        ADIAG:  ***************************************
        ADIAG:  ****    ARIES MAINTENANCE MENU    ****
        ADIAG:  ***************************************
        ADIAG:
        ADIAG:  1 - ARIES VALIDATION
        ADIAG:  2 - VALIDATION DUMP
        ADIAG:  3 - HELP
        ADIAG:  4 - EXIT
        ADIAG:  5 - RECEIVER
        ADIAG:  6 - MRG
        ADIAG:  7 - FRG
        ADIAG:  8 - UIT
        ADIAG:  9 - RRG
        ADIAG: 10 - TOY
        ADIAG: 11 - RNG
        ADIAG: 12 - MIT
        ADIAG: 13 - STU TX
        ADIAG: 14 - STU RCVR
        ADIAG: 15 - RCVR ANALOG LOOP
        ADIAG: 16 - MRG ANALOG LOOP
        ADIAG: 17 - FRG ANALOG LOOP
        ADIAG: 18 - CLOCKS
        ADIAG: 19 - SUMMARY LOG
ADIAG>5 <return>
```

FIGURE 6-1. SELECTING THE RECEIVER MAINTENANCE MENU SCREEN.

```
        ADIAG:
        ADIAG:  ********************************
        ADIAG:  *** RECEIVER MAINTENANCE MENU ***
        ADIAG:  ********************************
        ADIAG:  1 - VALIDATION
        ADIAG:  2 - DUMP
        ADIAG:  3 - HELP
        ADIAG:  4 - EXIT
        ADIAG:  5 - DIAG #1
    ADIAG>1 <return>
```

FIGURE 6-2. SELECTING THE RECEIVER VALIDATION TEST SELECTION MENU SCREEN.

6.1 RUNNING VALIDATION TEST AND DATA DUMP ROUTINES.

Normally, the validation tests would be run as a complete set, referred to as an ARIES validation test. This would be performed before and after using the ARIES as a beacon environment simulator and once a day for a daily maintenance check. A summary log printout would be generated and maintained in a log book.

To run the ARIES validation test the user must select the ARIES VALIDATION option on the ARIES Maintenance Menu. This is done by typing "1" and pressing the RETURN key at the control terminal. At this time the ARIES validation sequence executes with the result of each test displayed on the response terminal for on-line monitoring.

After all of the validation tests are completed the ARIES Maintenance Menu appears on the control screen signaling the completion of the ARIES validation test.

To run validation tests on a device or analog subsystem the user must move through the second level menu from the ARIES Maintenance Menu, then select the validation option (as previously explained above). Options 5 through 17 access second level menus.

From the validation test selection menu, the user can choose to run all of the tests as a set by typing "0" followed by pressing the RETURN key or just pressing the RETURN key. With no number entered, the program default is "0." When this option is chosen the EXIT option is included. After all of the tests have run, the user is returned to the second level menu.

To run an individual validation test, the user enters the option number appearing in front of the validation test and presses the RETURN key. For example, if the user is at the Receiver Validation Selection Menu and wants to run the Azimuth Generator Logic Test, he would enter at the control terminal a "3" then press the RETURN key (as illustrated in figure 6.1-1). The test then executes automatically and its result is displayed on the response screen and written into the Summary Log file.

After the test is completed the device validation menu is scrolled again on the control screen. This gives the user the flexibility of selecting the same test again, selecting a different test, selecting the set of tests, or returning to the second level menu.

The Validation Data Dump routines are run the same way as the test routines. These routines are accessed through the second level menu by typing "2" and pressing the RETURN key. The Validation Data Dump Selection Menu appears on the control screen and prompts the user for the next entry.

Normally, the data dump routines are run separately, as opposed to running them as set dumps or as a system dump. In this text, a set dump refers to the running of the data dumps for all of the validation tests related to a device or analog subsystem, and a system dump refers to the running of all data dumps. Refer to appendix B for the complete listing of an ARIES system dump.

```
        ADIAG:
        ADIAG:  ***  RECEIVER VALIDATION  ***
        ADIAG:  1 - DETECTION AND DECODE LOGIC TEST
        ADIAG:  2 - TOAR LOGIC TEST
        ADIAG:  3 - AZIMUTH GENERATOR LOGIC TEST
        ADIAG:  4 - EXIT
        ADIAG:  0 - ALL (DEFAULT)
    ADIAG>3 <return>
```

FIGURE 6.1-1. RUNNING THE AZIMUTH GENERATOR LOGIC TEST

If a validation test should fail, the user would run the associated validation data dump routine to review all of the test data collected. Based on the tests results, the user would take appropriate actions to correct the problem. The action may be in the form of replacing a failed digital board in order to immediately bring the ARIES back up and repair the failed board later, or running a diagnostic routine to investigate the problem further.

To run an ARIES validation dump, the user must select the VALIDATION DUMP option on the ARIES Maintenance Menu. This is done by typing "2" and pressing the RETURN key at the control terminal. Before the ARIES validation data dump begins the following message appears on the control screen:

```
        ADIAG:
        ADIAG:  SELECT LINE PRINTER OR CONSOLE (PR/CON)
    ADIAG>
```

This message requests the user to specify the output device to which the dump files will be sent. If the user types CON and presses the RETURN key or just presses the RETURN key, the dump files will be displayed on the response screen. If the user types PR and presses the RETURN key, a hard copy of the system dump will be generated by the line printer. Before selecting the printer as the output device the user should verify that the printer is "on line." As each data dump is executed a statement specifying the dump and its destination are displayed on the response screen for on-line monitoring.

After all of the data dumps are completed the ARIES Maintenance Menu appears on the control screen signaling the completion of the system dump.

To run a validation data dump on a device or analog subsystem, the user must move through the second level menu from the ARIES Maintenance Menu and select the dump option to access the Validation Data Dump Selection Menu. From this menu the user can choose to run all of the data dumps as a set by typing "0" followed by pressing the RETURN key or just pressing the RETURN key. With no number entered, the program default is "0." When this option is chosen, the exit option is included. After all of the data dumps are completed, the user is returned to the second level menu.

To run an individual data dump, the user enters the option number appearing in front of the validation data dump and presses the RETURN key. For example, if the user is at the Receiver Validation Data Dump Selection Menu and wants to run the Azimuth Generator Logic Test data dump, he would enter "3" at the control terminal and press the RETURN key (as illustrated in figure 6.1-2).

```
        ADIAG:
        ADIAG:  ***  RECEIVER VALIDATION DUMP  ***
        ADIAG:  1 - DETECTION AND DECODE LOGIC TEST
        ADIAG:  2 - TOAR LOGIC TEST
        ADIAG:  3 - AZIMUTH GENERATOR LOGIC TEST
        ADIAG:  4 - EXIT
        ADIAG:  0 - ALL (DEFAULT)
ADIAG>3 <return>
```

FIGURE 6.1-2. RUNNING THE AZIMTUH GENERATOR LOGIC TEST DATA DUMP

Before the data dump begins, the following message appears on the control screen:

```
     ADIAG:
     ADIAG:  SELECT LINE PRINTER OR CONSOLE (PR/CON)
ADIAG>
```

This message is the same as described for the system dump and is used the same way.

After the data dump is completed the Validation Data Dump Menu is scrolled again on the control screen. In this way the user has the flexibility of selecting the same dump again, selecting a different data dump, selecting the set of dumps, or returning the the second level menu.

6.2 USING HELP FILES.

Help files are provided within the main menu (first level menu) as well as under each device and loop test menu (second level). The main menu help function provides the user with a broad overview of what is contained within each option of the main menu; listing types of validation, validation dump, diagnostic and/or statistical routines. This function can be selected by choosing option "3 - HELP" from the "ARIES MAINTENANCE MENU."

The help options located in each device or loop test menu (second level menu) contain a brief overview of what each test or function does within that specific menu, and its submenus (third level menu). For example, the Radar Report Generator help option will provide a brief description of each of its four validation tests and their associated dump routines, as well as a description of its two diagnostic routines. Some of the selected help options will queue the user with a help menu. This menu narrows the selection down to a more specific area of the device menu. As an example, the Fruit Reply Generator help menu consists of three options: one for the validation and validation dump routines, one for all of the diagnostic routines, and one for the fruit environment statistics routine.

Once a help option is selected, the help file will begin to appear on the response screen one page at a time. At the bottom of each page the following message will appear:

HIT RETURN FOR MORE OR S TO STOP.

The user then can step through each page by hitting the RETURN key on the response terminal, or type a "S" followed by a RETURN at the prompt again (on the response terminal) to return back to the current level menu. If all pages of the help file have been exhausted, the following message will appear at the bottom of the last page:

HIT RETURN TO CONTINUE DIAGNOSTIC PROGRAM

Depressing the RETURN key will then return the user back to the current level menu.

6.3 RUNNING DIAGNOSTIC ROUTINES.

This section concentrates on how to run, or more appropriately to use, the device diagnostic No. 1 routines. The user must be familiar with the device hardware design (refer to the ARIES Principles of Operations Manual DOT/FAA/CT-TN88/4) and familiar with the program format for each device (refer to appendix D) to properly

use these routines. The user has full program control over the devices through these routines including setting up illegal or undefined states. Care must be exercised when using them.

There is a diagnostic routine No. 1 for every digital device in the ARIES. Initially, these routines were used to debug logic during development and fabrication. Now they are used as tools to track down hardware failures, should they occur.

The user accesses the diagnostic routine No. 1 via the device (second level) menu by typing a "5" and pressing the RETURN key. The program responds with the following message on the control screen:

```
        ADIAG:
        ADIAG:  ENTER ITERATION COUNT (0=CONTINUOUS)
    ADIAG>
```

The user enters a decimal number at the control terminal. This number is a parameter used by the diagnostic routine to define the number of times any function will be executed when chosen. If no number is entered, the parameter defaults to "0" which chooses the continuous execution mode. Once the number is entered the RETURN key is pressed. Then the diagnostic No. 1 (DIAG #1) function menu appears on the control screen. For example, if the user is at the Receiver Maintenance Menu and chooses DIAG #1, the following function menu would appear:

```
            ADIAG:
            ADIAG:  *** RECEIVER DIAGNOSTIC ***
            ADIAG:  1 - OUTPUT COMMAND
            ADIAG:  2 - STATUS
            ADIAG:  3 - INPUT MESSAGE
            ADIAG:  4 - SHOW INTERRUPT COUNTER
            ADIAG:  5 - CLEAR INTERRUPT COUNTER
            ADIAG:  6 - SHOW STATUS COUNTER
            ADIAG:  7 - CLEAR STATUS COUNTER
            ADIAG:  8 - EXIT
            ADIAG:
            ADIAG:    ENTER FUNCTION
        ADIAG>
```

At this point, the user has full control over the device, in this case, the Uplink Receiver.

If the user specified an Iteration Count of three, each function selected is executed three times followed by the reappearance of the diagnostic function menu on the control screen. If the user needs to change the Iteration Count, he must first exit the diagnostic menu and reenter and specify the new Iteration Count.

If the user specifies the continuous execution mode, a message would appear on the control screen with a general structure as follows:

```
        CONADIAG:
        CONADIAG:  Hit <RETURN> to exit continuous mode.
        CONADIAG:
    CONADIAG>
```

This allows the user to exit the continuous execution mode and return to the diagnostic No. 1 function menu.

7. DESCRIPTION OF ARIES MAINTENANCE ROUTINES.

The following sections provide a detailed description on the routines available under the ARIES hardware maintenance software package. Section 7.1 describes the maintenance summary log. Sections 7.2 through 7.9 describe all of the routines developed for the ARIES hardware devices. Sections 7.10 and 7.11 describe all of the routines developed for the STU devices. Sections 7.12, 7.13, and 7.14 cover all of the routines developed for the analog hardware.

7.1 SUMMARY LOG.

The Summary Log provides the user with an account of what occured during an ARIES hardware maintenance session. The log is initiated automatically when the Maintenance Package is loaded and is displayed on the response terminal during the session. The Summary Log lists the sequence of validation tests, data dumps and diagnostics in the order of execution starting when the maintenance session was initiated up to its termination. Appendix A shows a summary Log Printout of a complete system validation test and system validation data dump sequence.

At the beginning of each maintenance session the Summary Log opens with the statement:

```
* * * A R I E S   M A I N T E N A N C E   I N I T I A T E D * * *
                    ARIES FIELD UNIT No.
                     mm/dd/yy   hh:mm:ss

  ADIAG:  Vn.nn    mm/dd/yy
STUTASK:  Vn.nn    mm/dd/yy
```

and at the completion of the maintenance session the Summary Log closes with the statement:

```
* * * A R I E S   M A I N T E N A N C E   C O M P L E T E D * * *
                    ARIES FIELD UNIT No.
                     mm/dd/yy   hh:mm:ss
```

These statements bracket the complete account of what transpired during the maintenance session. The number at the end of the statement "ARIES FIELD UNIT" is

the I.D. number identifying the ARIES unit. The date and time printed below each statement is the current system date and time when the ARIES Maintenance Program was loaded.

If the ARIES System Validation Test is run the statement;

**** ARIES VALIDATION INITIATED ****

is written on the Summary Log before any validation routines are executed and the statement;

**** ARIES VALIDATION COMPLETED ****

is written on the Summary Log after all validation routines are executed. All of the validation routines run, along with their final results, are listed between these statements. These statements are not generated when running validation routines as sets or individually.

The validation routines associated with a particular device or subsystem are bracketed by an opening and closing statement to highlight related tests. The general format of the bracket statements and the validation tests executed are shown below:

```
DEVICE VALIDATION INITIATED
    DEVICE VALIDATION:  Title of Validation Routine A     Result
    DEVICE VALIDATION:  Title of Validation Routine B     Result
    DEVICE VALIDATION:  Title of Validation Routine C     Result
DEVICE VALIDATION COMPLETED
```

If the validation test is successful, the word "SUCCESSFUL" is printed after the test as the result. If the validation test is unsuccessful, the word "FAILURE" is printed. In this way a summary of test results is listed; hence the term Summary Log. The azimuth validation tests for the Uplink Receiver, the STU Transmitter, and the STU Receiver boards are an exception. If no obvious errors are detected by these tests the statement "EXECUTED" is generated, followed with the calculated azimuth rate along with the root mean square and standard deviation between samples for on-line evaluation.

If the ARIES System Validation Data Dump is run the statement;

**** ARIES VALIDATION DUMP INITIATED ****

is generated on the Summary Log before any validation dumps are performed and the statement;

**** ARIES VALIDATION DUMP COMPLETED ****

is generated on the Summary Log after all validation dumps are performed. All of the validation data dumps run are listed between these statements. When validation dump routines are run as sets or individually these statements are not generated.

Like the validation test routines, validation data dump routines associated with a particular device or analog subsystem are bracketed by an opening and closing statement. The general format for these bracket statements is shown below:

```
DEVICE VALIDATION DUMP INITIATED
    DEVICE VALIDATION DUMP:  Title of Dump Routine A      Output
    DEVICE VALIDATION DUMP:  Title of Dump Routine B      Output
    DEVICE VALIDATION DUMP:  Title of Dump Routine C      Output
DEVICE VALIDATION DUMP COMPLETED
```

If the data dump is generated on the printer, the word "PRINTED" is appended after the validation dump routine. If the data dump is reviewed on the response terminal, the word "DISPLAYED" is appended after the validation data dump. In this way, the user can determine from the Summary Log whether a hard copy of a data dump was generated.

7.1.1 Summary Log Function Menu.

The Summary Log Menu provides some control of the summary log file (refer to figure 7.1.1-1). This menu contains three functions.

```
*****************************
***    SUMMARY LOG MENU    ***
*****************************
1 - RESCROLL LOG
2 - CLEAR LOG
3 - PRINT LOG
4 - EXIT
```

FIGURE 7.1.1-1. SUMMARY LOG MENU SCREEN

a. RESCROLL LOG. This function rescrolls the complete summary log on the response screen for review. This allows the user to review events that occurred but have been scrolled off the screen do to later entries on the Summary Log.

b. CLEAR LOG. This function deletes the Summary Log file, except for the opening statement, and rescrolls the Summary Log on the response screen.

c. PRINT LOG. This function generates a hard copy of the Summary Log up to its last update.

7.2 UPLINK RECEIVER/AZIMUTH GENERATOR.

The device menu for the Uplink Receiver (RCVR) board is shown in figure 7.2-1 as it appears on the control screen. This menu is typical of the second level menus (device and analog subsystem menus) in that the first four options are similar. When additional options are available they are appended on the bottom of the menu with incrementing option select numbers (as will be seen on other second level menus).

As shown on figure 7.2-1 there are five options on the Receiver Maintenance Menu:

a. To access the receiver board Validation Test Menu (third level menu).

b. To access the receiver board Validation Data Dump Menu (third level menu).

c. To access the receiver help text file.

d. To return to the System Maintenance Menu (first level menu).

e. To access diagnostic routine No. 1 function menu.

```
        ADIAG:
        ADIAG:  ********************************
        ADIAG:  *** RECEIVER MAINTENANCE MENU  ***
        ADIAG:  ********************************
        ADIAG:  1 - VALIDATION
        ADIAG:  2 - DUMP
        ADIAG:  3 - HELP
        ADIAG:  4 - EXIT
        ADIAG:  5 - DIAG #1
    ADIAG>
```

FIGURE 7.2-1. UPLINK RECEIVER BOARD OPTION SCREEN

When option 1 or 2 is selected, program control is past to a third level menu, the Validation Test Menu or the Validation Data Dump Menu, respectively. These menus are discussed in section 7.2.1.

When option 3 is selected, a help text file appears on the response screen. This text file provides a brief description on all of the routines accessible under the Receiver Maintenance Menu. Section 6.2 describes how to use the Help Text files. Refer to appendix C for the complete listing of the RCVR Help Text File.

When option 4 is selected, the user is returned to the System Maintenance Menu.

When option 5 is selected, program control is moved to the diagnostic No. 1 function menu. The functions available on this menu are discussed in section 7.2.2.

7.2.1 Validation Test and Data Dump Routines.

There are three validation routines for the Uplink Receiver board and three corresponding data dump routines. The validation tests are:

a. Interrogation Detection and Decode Test.

b. Time-of-Arrival (TOAR) Counter Logic Test.

c. Azimuth Generator Logic Test.

The validation test routines are accessed via the VALIDATION option. The receiver validation menu appears on the control screen as follows:

```
        ADIAG:
        ADIAG:  ***  RECEIVER VALIDATION  ***
        ADIAG:  1 - DETECTION AND DECODE LOGIC TEST
        ADIAG:  2 - TOAR LOGIC TEST
        ADIAG:  3 - AZIMUTH GENERATOR LOGIC TEST
        ADIAG:  4 - EXIT
        ADIAG:  0 - ALL (DEFAULT)
    ADIAG>
```

At this menu the user can run the Uplink Receiver validation tests separately or as a set. When a single test is selected the menu is again scrolled onto the control screen once the test is completed. This gives the user the flexibility of repeating the same validation test or selecting a difference one. When the tests are run as a set, the EXIT option is executed after the tests are completed and the Receiver Maintenance Menu appears on the control screen.

7.2.1.1 Interrogation Detection and Decode Test.

The Interrogation Detection and Decode Test verifies that the Uplink Receiver can properly detect and decode interrogations and assemble interrogation data block messages on Air Traffic Control Radar Beacon System (Mode 2, Mode A Only All-Call, and ATCRBS/Mode S All-Calls) and Mode S (short and long) interrogations. Eight interrogations are digitally injected in the front end of the receiver. Four are ATCRBS interrogations (mode 2 no P4 pulse, two mode 3/A, one with a narrow P4 pulse and one with a wide P4 pulse, and one mode C with wide P4 pulse) and four are Mode S interrogations (two short and two long). Successful generation of Mode S interrogation message blocks checks the capability of the receiver to detect short and long Mode S interrogations, checks the receivers detection and decode logic, the Mode S parity decoding logic, and the message assembly control logic.

The pass criteria for this test is the successful reading of all eight interrogation messages. The range and azimuth information contained in the

messages is not checked by this test but are checked by different tests. Specifically, the interrogation type field is checked, and if Mode S, the data fields are checked. The result of the test is written on the Summary Log.

In the event no interrogations are detected, that is, no interrupts are generated by the Uplink Receiver board, a software timeout occurs and the test is declared a failure.

The data dump file generated by this routine is formatted as shown below:

```
 COMMAND:  21   INTERRUPT COUNT:  1
RCVRDATA:  rrrrrC01 aaaa0000        0         0         0
MASKDATA:         1        0        0         0         0
   FLAGS:
REF.DATA:         1        0        0         0         0
```

The command shown on the first line is the command issued to the on-board interrogation generation logic to inject a canned interrogation. The interrupt count represents the number of interrogations generated by the Uplink Receiver during the test. The second line is the interrogation message block (RCVRDATA) read from the receiver and the determinable part of the message (MASKDATA) is shown directly below it. Note that the two interrogation message fields designated as "rrrrr" and "aaaa," which are the time-of-arrival field and the azimuth field, respectively, are not determinable during this test. The reference data (REF.DATA) which is the acceptance criteria is on the bottom line. If any errors should occur, an error flag (********) will be added between the test data and the reference data to highlight the failure.

If the software timeout occurred because no interrogations were received, the error message "POSSIBLE INTERRUPT ERROR -- COUNT NOT INCREMENTED" is written on the dump file.

7.2.1.2 TOAR Logic Test.

The TOAR Logic Test verifies the TOAR counter logic and supporting data buses and control lines. This is accomplished through generation of interrogations by on-board interrogation diagnostic logic. The TOAR data is extracted from the interrogation messages generated as a result of receiving the interrogations.

First, the test is initiated by injecting one mode 2 interrogation into the receiver. The detection of this interrogation, or any All-Call interrogation, causes the TOAR counter to be reset and this is used as a reference point. After the mode 2 interrogation, Mode S short interrogations are injected every 64.0625 microseconds. Since the TOAR counter is clocked at 16 MHz, the 64.025 microseconds corresponds to a TOAR count increment of Hex 401 each interrogation. The TOAR field is extracted from each Mode S interrogation message until 1024 samples are collected. This number of samples is collected to ensure that the full 20-bit range of the TOAR counter is checked. After the TOAR data is collected further generation of interrogations is inhibited.

The pass criteria for this test is the successful match up of the TOAR data with expected values. If the TOAR field of each subsequent interrogation does not

increase by a Hex 401 count, the test is declared a failure. The result of the test is written on the Summary Log.

The associated validation dump file is generated containing the TOAR data extracted from 1024 Mode S short interrogations and error flags, if any should occur. The format of this data dump is shown below:

```
     1025 INTERRUPTS RECEIVED (DECIMAL)

TOAR CNTR
   42C     !   338F9     !   66DC6     !   9A293     !   CD760     !
   82D     !   33CFA     !   671C7     !   9A694     !   CDB61     !
    '          '           '           '           '
    '          '           '           '           '
```

The interrupt count shown on the first line should be 1025. This represents the first mode 2 interrogation sent and the next 1024 Mode S short interrogations that followed to collect the TOAR data.

7.2.1.3 Azimuth Generator Logic Test.

The Azimuth Generator Logic Test checks the azimuth generator/decoder by taking samples of azimuth data at 0.1-second intervals for 16-seconds. The 16 second interval is to ensure that at lease one complete rotation period is sampled, i.e., the full range of the azimuth counter (the ARIES can operate with a 3.5 to 15-second rotation period). The data is then used to calculate the simulated antenna scan rate. Also, the mean and standard deviation is calculated on the sampled intervals.

This test runs for approximately 25 seconds. It uses the internally generated azimuth change pulses (ACP's) and azimuth reference pulses (ARP's) as the azimuth source. The azimuth data is extracted from interrogation messages which are generated on mode 2 interrogations injected into the receiver.

The Azimuth Generator validation dump file is generated with each run containing the calculated rotation rate, and the root mean square and standard deviation on the azimuth samples collected. Also included is the 161 samples of azimuth data and the difference between each sample. The format of this dump file is shown below. The data content shown is typical for a 4.0-second scan rate.

```
     AVERAGE AZIMUTH RATE =       4.00348 (SECONDS)
     ROOT MEAN SQUARE     =     409.24320 (HEX  199)
     STANDARD DEVIATION   =       0.66351 (AU'S)

AZMTH  DELTA
 453    0  !  3914  199  !  2DD7  199  !  2299  199  !  175A  199
 5EC  199  !  3AAD  199  !  2F71  19A  !  2432  199  !  18F3  199
     '            '            '            '            '
     '            '            '            '            '
     '            '            '            '            '
```

If the difference between azimuth samples is equal to zero the following error message is written to the dump file and the test declared a failure:

```
** ERROR **  INVALID DATA:
** ERROR **    AZIMUTH RATE EQUAL TO ZERO.
** ERROR **    ROUTINE ABORTED!!!
```

7.2.2 Diagnostic Routine No. 1.

The diagnostic routine No. 1 for the Uplink Receiver gives the user total control in programming the Uplink Receiver board. When this diagnostic is selected the following message appears on the control screen:

```
     ADIAG:
     ADIAG:  ENTER ITERATION COUNT (0=CONTINUOUS)
ADIAG>
```

The user then enters a decimal number at the control terminal. This number is a parameter used by the diagnostic routine to define the number of times any function will be executed when selected. If no value is entered the parameter defaults to "0" which is the continuous mode. After the number is entered the RETURN key is pressed. The Uplink Receiver diagnostic No. 1 menu then appears on the control screen as shown below:

```
     ADIAG:
     ADIAG:  *** RECEIVER DIAGNOSTIC ***
     ADIAG:  1 - OUTPUT COMMAND
     ADIAG:  2 - STATUS
     ADIAG:  3 - INPUT MESSAGE
     ADIAG:  4 - SHOW INTERROGATION INTERRUPT COUNTER
     ADIAG:  5 - CLEAR INTERROGATION INTERRUPT COUNTER
     ADIAG:  6 - SHOW STATUS ERROR COUNTER
     ADIAG:  7 - CLEAR STATUS ERROR COUNTER
     ADIAG:  8 - EXIT DIAGNOSTIC
     ADIAG:
     ADIAG:  ENTER FUNCTION
ADIAG>
```

From the control terminal the user can select a function by typing the number preceding the function shown on the menu, then pressing the RETURN key. These functions are:

a. OUTPUT COMMAND. This function outputs a half-word command, defined by the user, to the Uplink Receiver. When this function is selected a list of commands appears on the control screen as a quick reference for the user. This list is shown in figure 7.2.2-1 as it appears on the control screen.

The user then enters the command in hexidecimal format at the control terminal and presses the RETURN key. The command does not have to be from the command list. The structure of the command is defined in appendix D.

b. SHOW STATUS. This function reads the device status on the Uplink Receiver board and displays it on the control screen as follows;

DEVICE STATUS = xx

where xx represents the status byte in hexidecimal format. The structure of the status byte is defined in appendix D.

```
      ADIAG:
      ADIAG:  I N T E R R O G A T I O N S
      ADIAG:  0221 - ONE MODE_2
      ADIAG:  0223 - ONE MODE_A ALL-CALL
      ADIAG:  0225 - ONE MODE_C/MODE_S ALL-CALL
      ADIAG:  0227 - ONE MODE_A/MODE_S ALL-CALL
      ADIAG:  0229 - ONE SURVEILLANCE (ALT)
      ADIAG:  022B - ONE SURVEILLANCE (ID)
      ADIAG:  022D - ONE COMM B (ALT)
      ADIAG:  022F - ONE COMM B (ID)
      ADIAG:  0211 - CONTINUOUS MODE_2
      ADIAG:  0213 - CONTINUOUS MODE_A ALL-CALL
      ADIAG:  0215 - CONTINUOUS MODE_C/MODE_S ALL-CALL
      ADIAG:  0217 - CONTINUOUS MODE_A/MODE_S ALL-CALL
      ADIAG:  0219 - CONTINUOUS SURVEILLANCE (ALT)
      ADIAG:  021B - CONTINUOUS SURVEILLANCE (ID)
      ADIAG:  021D - CONTINUOUS COMM B (ALT)
      ADIAG:  021F - CONTINUOUS COMM B (ID)
      ADIAG:  0240 - ENABLE INTERRUPTS
      ADIAG:  02C0 - DISABLE INTERRUPTS
      ADIAG:  0020 - RESET
      ADIAG:
      ADIAG:  ENTER COMMAND
  ADIAG>
```

FIGURE 7.2.2-1. UPLINK RECEIVER COMMAND LIST

c. INPUT MESSAGE. The input message function reads ten halfwords from the Uplink Receiver board. When this function is selected the following prompt appears on the control screen:

```
ADIAG:  DO YOU WANT DATA DISPLAYED ON TERMINAL?(Y/N)
ADIAG>
```

If the user enters a Y, data is displayed on the control screen as follows:

```
XXXX XXXX XXXX XXXX XXXX XXXX XXXX XXXX XXXX XXXX
```

The INPUT MESSAGE function is used instead of an INPUT DATA function since data read from the receiver board are ten halfword interrogation messages (refer to appendix D for Receiver message formats).

d. SHOW INTERROGATION INTERRUPT COUNTER. This function reads the memory location which holds the number of times the Receiver interrogation interrupt service routine (ISR) was called and displays the count on the control screen as follows;

```
ADIAG:
ADIAG:  INTERROGATION INTERRUPT COUNTER = xx
```

where "xx" represents the number of interrogation interrupts serviced, i.e., if three interrogations are injected into the receiver when the receiver interrupts are enabled, the interrogation interrupt count should be "3."

e. CLEAR INTERROGATION INTERRUPT COUNTER. This function clears the the memory location which holds the number of times the receiver interrogation ISR was called and then executes the SHOW INTERROGATION INTERRUPT COUNTER function.

f. SHOW STATUS INTERRUPT COUNTER. This function reads the memory location which holds the number of times the receiver status ISR was called and displays the count on the control screen as follows;

```
ADIAG:
ADIAG:  STATUS INTERRUPT COUNTER = xx
```

where "xx" represents the number of status interrupts serviced by the CPU.

g. CLEAR STATUS INTERRUPT COUNTER. This function clears the memory location which holds the number of times the receiver status ISR was called and then executes the SHOW STATUS INTERRUPT COUNTER function.

h. EXIT DIAGNOSTIC. This function returns the user to the Uplink Receiver Maintenance Menu and leaves the Uplink Receiver board in its current state. That is, if the Receiver is programmed for a particular mode, it will remain in that mode after the diagnostic is exited.

7.3 MODELED REPLY GENERATOR.

The device menu for the Modeled Reply Generator (MRG) is shown in figure 7.3-1 as it appears on the control screen. Access to this menu is through option 6 of the ARIES Maintenance Menu (refer to figure 4-2).

Referring to figure 7.3-1 there are six options available on the Modeled Reply Generator Maintenance Menu: These options are:

a. To access the MRG Validation Test Menu.

b. To access the MRG Validation Data Dump Menu.

c. To access the MRG Help Text File.

d. To return to the System Maintenance Menu.

e. To access the diagnostic No. 1 function menu.

f. To access the diagnostic No. 2 function menu.

```
        ADIAG:
        ADIAG:  ****************************
        ADIAG:  *** MRG MAINTENANCE MENU ***
        ADIAG:  ****************************
        ADIAG:  1 - VALIDATION
        ADIAG:  2 - DUMP
        ADIAG:  3 - HELP
        ADIAG:  4 - EXIT
        ADIAG:  5 - DIAG #1
        ADIAG:  6 - DIAG #2
ADIAG>
```

FIGURE 7.3-1. MRG MAINTENANCE MENU SCREEN

Selecting option 1, the user is moved to a third level menu. This menu, the Modeled Reply Generator Validation Test Menu allows the user to run any one of six validation tests separately or as a set (see section 7.3.1).

Selecting option 2, the user is also moved to a third level menu. This menu, the Modeled Reply Generator Validation Data Dump menu allows the user to run any one of six validation test data dumps separately or as a set (see section 7.3.1).

Selecting option 3, the Modeled Reply Generator help text file is displayed on the response screen. This file provides a brief description of all the routines accessible under the Modeled Reply Generator Maintenance Menu (refer to appendix C for the listing of this help file).

Selecting option 4, the user is returned to the system maintenance menu.

Selecting option 5 moves the user to the diagnostic No. 1 menu. This routine is described in section 7.3.2.1.

Selecting option 6 moves the user to the diagnostic No. 2 menu. This routine is described in section 7.3.2.2.

7.3.1 Validation Test and Dump Routines.

Access to the Modeled Reply Generator validation tests is through the VALIDATION option on the MRG Maintenance Menu. When VALIDATION is selected, the Modeled Reply Generator Validation Menu appears on the control screen as shown in figure 7.3.1-1.

```
     ADIAG:
     ADIAG:  ***   MRG VALIDATION   ***
     ADIAG:  1 - PRIMARY/SECONDARY MEMORY TEST AND SWAP TEST
     ADIAG:  2 - PRIMARY BUFFER REPLY COUNTER LOGIC TEST
     ADIAG:  3 - SECONDARY BUFFER REPLY COUNTER LOGIC TEST
     ADIAG:  4 - PRIMARY/SECONDARY REPLY COUNTER SWAP TEST
     ADIAG:  5 - MICRO PROCESSOR LOOPBACK TEST
     ADIAG:  6 - REPLY GENERATOR LOOPBACK TESTS
     ADIAG:  7 - EXIT
     ADIAG:  0 - ALL (DEFAULT)
ADIAG>
```

FIGURE 7.3.1-1. MRG VALIDATION TEST MENU SCREEN

Referring to figure 7.3.1-1, there are six validation tests that check various modules of the MRG. The first four tests verify the MRG interface buffer. The fifth validation test verifies the controller and the buses tying the controller with the interface buffer. The sixth validation test verifies the reply generators and the buses tying the generators with the controller.

Before the validation tests are described, a general description of the MRG hardware layout is appropriate to understand the approach taken to verify the MRG. The MRG can be divided into three principle hardware blocks: the MRG interface buffer, the MRG controller, and the target reply generators, as depicted in figure 7.3.1-2.

The interface buffer is primarily used as temporary storage for preprocessed reply blocks. The interface buffer has two separate memory buffers, each containing a 1K word by 16-bit memory, independent read and write address counters, an 8-bit reply block counter to keep track of the number of reply blocks stored in the

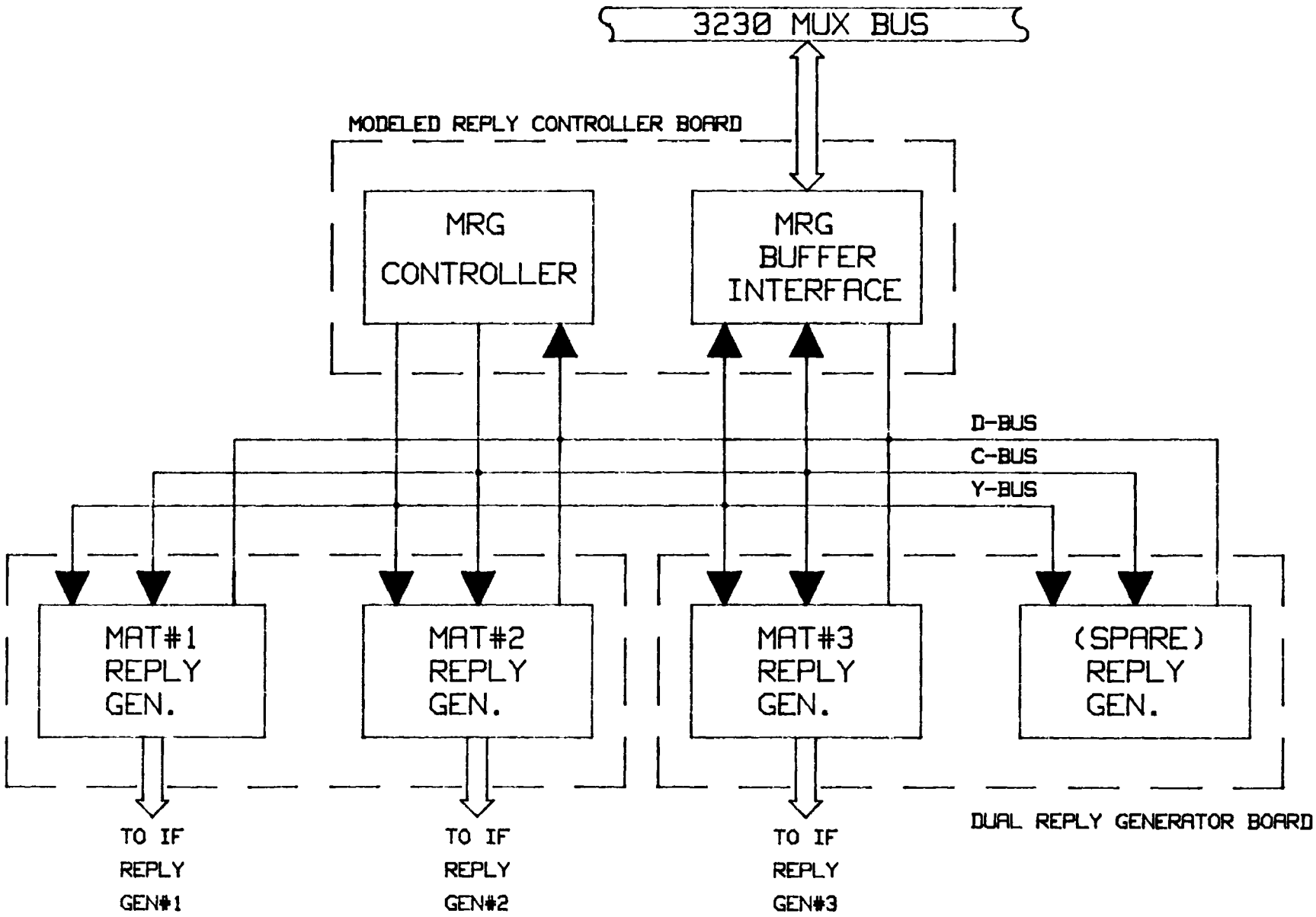

FIGURE 7.3.1-2 MODELED REPLY GENERATOR DIGITAL CONFIGURATION

memory, and supporting control logic. At any time, one of the memory buffers is designated as primary and the other designated as secondary. Only the memory buffer designated as primary can be read by the controller.

Under normal operation, the CPU loads preprocessed all-call reply blocks into the secondary memory to respond to the next anticipated all-call interrogation. In the case of roll-call interrogations, the CPU loads the reply block into the primary memory for immediate transmission. The memory designations are reversed 56 microseconds prior to the next all-call interrogation.

The MRG controller is a high speed bit-slice microprocessor with its program stored in nonvolatile memory (Program Read Only Memory). The program contains all of the routines for normal operation and diagnostic support operations. During normal operations, the controller determines if a reply block is stored in the primary memory by checking the primary reply block counter. If a reply block is there it is transferred to the next available target reply generator. During the diagnostic mode, the controller executes one of three diagnostic support routines specified by the CPU or is placed in a monitoring loop if the interface buffer is under test.

The target reply generators accept reply blocks from the controller and assemble the reply code train for transmission. In both the normal and diagnostic operation, modulation control signals are generated to drive an intermediate frequency (IF) target reply generator. In the diagnostic mode replies can be directed under program control to a specified target reply generator.

7.3.1.1 Primary/Secondary Memory Test and Swap Test.

The Primary/Secondary Memory Test and Swap Test verifies the correct operation of both memory buffers No. 1 and No. 2 by checking every bit position for accuracy. This is done using a five-step approach. First, a memory buffer is loaded with all 0000's, then immediately read comparing for data integrity. Next, the memory buffer is loaded with all 5555's, then read comparing for data integrity. This is repeated for the values AAAA and FFFF. Finally, on the fifth step, the memory is loaded with sequential data from 0 to 1023, then read comparing the data for integrity. If any of the data read from the memory buffer does not correlate with the expected value, the test is labeled a failure, but the test does continue to completion.

The data dump file generated by this test is formatted as shown below:

PRIMARY MEMORY BUFFER (BUFFER 1) VALIDATION - 0000 HEX

	0	1	2	3	4	5	.	.	.	E	F
0	0	0	0	0	0	0	.	.	.	0	0
1	0	0	0	0	0	0	.	.	.	0	0
2	0	0	0	0	0	0	.	.	.	0	0
.	.	.	.	.	.	.	.	.	.	.	.
.	.	.	.	.	.	.	.	.	.	.	.
.	.	.	.	.	.	.	.	.	.	.	.
3F	0	0	0	0	0	0	.	.	.	0	0

The first line identifies the test followed by the expected result, which in this case is 0000 hexidecimal. On the line directly below is a series of numbers from 0 through F. These numbers represent the four least significant bits of the memory buffer address. Below these two lines the remaining upper six address bits are listed from 0 to 3F, comprising the first column. This format maps each data location comprising the memory buffer. When a particular memory location does not verify correctly, an asterisk is placed to the left of the errant result in the data dump file. This data dump format is consistent for each of the five tests included within each memory buffer test.

The second function of the Primary/Secondary Memory Test and Swap Test is to verify the correct operation of the primary/secondary memory designation control logic. The operation of this test first loads the primary memory buffer with all FFFF's and the secondary memory buffer with all 0000's. Then the Universal Interrupt Timer (UIT) (refer to section 7.5 for details on the UIT) is programmed to generate one 56 EARLY pulse to trigger the MRG Interface Buffer to reverse the memory buffer's primary and secondary designations. After a delay of 4 milliseconds the UIT interrupt counter is checked to determine if the 56 EARLY pulse occurred. If not, an error flag is set and the error message NO UIT PRE-INTERROGATION PULSE is printed to the data dump file. If the UIT interrupt occurred, the primary memory buffer data is read and compared with a lookup table of all 0000's. If the contents do not match, a secondary comparison is made to determine if the primary memory buffer data matches the lookup table of all FFFF's. If both conditions false the message, BUFFER 2 READ ERROR, is printed to the data dump file and an error flag is set. If the first condition fails but the second condition is true, then the message, PRIMARY/SECONDARY SWAP FAILURE is printed to the data dump file along with an error flag being set. If any error flag is set during the test, the test is considered a failure.

The data dump file associated with the Primary/Secondary Swap Test can be found in appendix B.

These are two separate pass criteria for the above test. First, the successful comparison of the data read from both memories with what was written to both memories. Second, the successful primary/secondary designation changes on memory buffer No. 1 and memory buffer No. 2. If any of the comparisons or the primary/secondary designation of the buffers should fail the test would be declared a failure.

7.3.1.2 Primary Buffer Reply Counter Logic Test.

The Primary Buffer Reply Counter Logic Test verifies that the Reply Counter logic associated with the primary memory, in this case memory buffer No. 1, can increment and decrement over its full range of values.

The Primary Reply Counter logic is used to keep track of the number of reply blocks stored in the Primary Memory Buffer logic. During normal operations the Primary Reply Counter is incremented by the CPU after a complete reply block was loaded into the Primary Memory Buffer. The Primary Reply Counter is decremented by the MRG controller after a complete reply block is read. Verification of this logic is accomplished with special hardware allowing the CPU, under diagnostic operation, to increment, decrement, and read the counter.

The test begins by resetting the MRG to it's initial state. The Reply Counter is then read to ensure that its value was set to zero. If a value other than 0 is found, the appropriate error flag is set and the test continues. At this point the Reply Counter is incremented, read, and compared with the expected value, then stored in the data dump file associated with this test. If a comparison should fail to match, the appropriate error flag is set and two asterisks are placed to the right of the errant result on the data dump file. The full range of values is checked in both the upward (0 through 255) and downward (255 through 0) directions. The operation of the test is identical for both two cases except for the command sent by the CPU to exercise the Reply Counter logic.

An example of a typical dump file for the Primary Reply Counter Logic Test is as follows. Refer to appendix B for a complete listing of the data dump file.

PRIMARY REPLY COUNTER INCREMENTATION FROM 0 - 255

0	32	64	96	128	160	192	224
1	33	65	97	129	161	193	225
2	34	66	98	130	162	194	226
.	.	.	.	.	.	.	.
.	.	.	.	.	.	.	.
.	.	.	.	.	.	.	.
31	63	95	127	159	191	223	255

As shown above, the first line of the data dump file declares the validation test type. The remaining lines of the data dump list sequentially, in vertical columns, the reply count read from the MRG hardware over the full range of the test.

The same process is then performed from the value of the reply counter (if test 1 was successful the value is 255) down sequentially 255 iterations. The data dump file associated with the decrement test is different from the data dump file associated with the increment test only in the first line test type header.

If any error flag was set during the test, the test is declared a failure.

7.3.1.3 Secondary Buffer Reply Counter Logic Test.

The Secondary Buffer Reply Counter Logic Test verifies that the Reply Counter logic associated with the secondary memory buffer (in this case memory buffer No. 2) can increment and decrement over its full range of values.

The purpose of the Secondary Reply Counter logic is similar to that of the Primary Reply Counter logic in that it keeps track of the number of reply blocks stored on the Secondary Memory Buffer.

The operation of this test is identical to the operation of the Primary Buffer Reply Counter Logic Test (discussed in section 7.3.1.2) except that the commands sent to the hardware are directed to the secondary memory buffer.

7.3.1.4 Primary/Secondary Reply Counter Swap Test.

The Primary/Secondary Reply Counter Swap Test verifies that the correct operation of the primary/secondary reply counter designation logic. The operation of the test first increments the Reply Counter for the primary memory buffer to the hexidecimal value of 55. Then the Reply Counter for the secondary memory buffer is incremented to the hexidecimal value of AA. Error flags are set to indicate if the operations above are not completed successfully. The test does continue to completion without regard of the previous results.

Once the reply counters are preset, the UIT is programmed to generate one 56 EARLY pulse to trigger the MRG Interface Buffer to reverse the reply counter's primary and secondary designations. After a delay of 4 milliseconds the UIT interrupt counter is checked to determine if the 56 EARLY pulse occurred. If not, an error flag is set and the error message, NO UIT PRE-INTERROGATION PULSE is printed to the data dump file. If the UIT interrupt occurred, the reply counters are read and compared to expected results. If the values read do not match the expected values, an error flag is set to indicate this situation.

If any error flag is set during the test, the test is declared a failure.

The data dump file associated with the Primary/Secondary Reply Counter Swap Test can be found in appendix B.

7.3.1.5 Microprocessor Loopback Test.

The first four validation routines are prerequisites for the successful operation of this test. The hardware functions checked by these tests are needed to support the microprocessor checkout. Therefore, these tests must be successful in order for the Microprocessor Loopback Test to be successful.

The Microprocessor Loopback Test verifies the operational status of the MRG's bit-slice microprocessor and its supporting input and output data buses and command bus. This is accomplished by placing the controller in its loopback diagnostic mode. In this mode the controller essentially detects and fetches unformatted four-word data blocks from the memory buffer designated as primary and attempts to store the blocks into a special random access memory (RAM) used to support diagnostic operations. First, the controller checks for a non-zero value in the primary reply counter. When the value is non-zero, the controller fetches a four-word block from the primary buffer and decrements the reply counter. Then the controller checks the status of the RAM. If the RAM's status is in the write mode the four-word block is stored in the RAM and the RAM's status is automatically switched to the read mode which is monitored by the CPU. The controller repeats the process again checking for a non-zero value in the primary reply counter.

This test first preloads both memory buffers with a sequence of four identical words each of hexidecimal values 0000 through FFFF to make up 16 blocks of data; each reply counter is incremented by 16.

After the data is loaded this test checks to see if any data was stored in the RAM. The data is then read and the RAM is checked for additional data until 16 4-word blocks are read. Next, the buffer designations are reversed and an

additional 16 blocks are read from the RAM. The purpose of this is to verify that the controller can access data from both buffers successfully. The data read is compared to the data written into the memories.

The pass criteria for this test is the successful comparison of the data written into both memory buffers with the data read from the output RAM. The controller loopback diagnostic routine supports the unformatted reply block structure allowing any bit pattern to be tested. If any comparison should fail to match, the test is declared a failure. The result of the test is written on the summary log file.

There are two other checks for possible failure conditions (a) no data is available from the output RAM, and (b) more data is available from the output RAM then was loaded into the memory buffers. The first failure condition is generated when the read/write status bit (see appendix D, MRG status byte) for the output RAM remains in the write mode longer than 1 millisecond after the CPU loaded data into the memory buffer. The second failure condition is generated when the read/write status bit of the output RAM remains in the read mode after all of the expected data were read. The test is declared a failure if either of this conditions occur even if the test data/reference data comparison is successful.

The data dump listing generated by this routine is formatted as shown below. A complete listing of the data dump file is shown in appendix B.

WORD 1	WORD 2	WORD 3	WORD 4
0	0	0	0
1111	1111	1111	1111
2222	2222	2222	2222
.	.	.	.
.	.	.	.
.	.	.	.
FFFF	FFFF	FFFF	FFFF
0	0	0	0
.	.	.	.
.	.	.	.
.	.	.	.
FFFF	FFFF	FFFF	FFFF

7.3.1.6 Reply Generator Loopback Tests.

The five validation routines discussed above are prerequisites for the successful operation of this test. The hardware functions checked by these tests are used in supporting the checkout of the reply generators. Therefore, these tests must be successful in order for the Reply Generator Tests to be successful.

The Reply Generator Loopback Tests verify that all four reply generators can successfully assemble ATCRBS replies for transmission. This is accomplished with the execution of the reply generator loopback diagnostic support routine executed by the controller (see appendix D, MRG command operation select field) and with the use of reply generator diagnostic support logic. This logic samples the ATCRBS modulation pulses when the reply is in transmission along with sampling the power, monopulse, left/right of boresight, and mainbeam/sidelobe control lines which drive the associated IF Reply Generator panel.

Under these tests the CPU loads a predefined set of 50 replies into the primary buffer and increments the reply counter one reply block at time and monitors the output RAM status from a read mode. In turn, the controller fetches a reply, loads it in the specified reply generator, and waits for sampled reply data from the Reply Generator. When the sampled data is returned, it is stored in the output RAM for subsequent reading by the CPU. This sequence is repeated until all 50 replies are sampled. If no data is returned by the Reply Generator after 4 milliseconds the controller automatically loads the output RAM with a dummy pattern of FFFF signifying that no data were returned. If no data is received after 5 milliseconds the program automatically substitutes a dummy pattern of "BBBB" for the expected data sample signifying that no data were returned by the controller.

The test is repeated four times; once for each of the four Reply Generators in the MRG. Note that the forth reply generator is not used by the MRG during normal operations, but is tested under diagnostics to verify all of the existing hardware.

The pass criteria for these tests is the successful comparison of the 50 reply samples read from the MRG with respect to the reply blocks sent. If any comparison should not match the test is declared a failure. The result of each test is recorded on the Summary Log file.

The data dump file generated by these tests is formatted as shown below. The complete listing of the data file can be found in appendix B.

RPG DATA				ERROR	RPG REFERENCE DATA			
W1	W2	W3	W4		W1	W2	W3	W4
51EB	1	1C05	0		51EB	1	1C05	0
A3D6	21	1F0A	1111		A3D6	21	1F0A	1111
F5C1	1	200F	2222		F5C1	1	200F	2222
47AC	1021	2314	3333		47AC	1021	2314	3333
.	.	.	.		.	.	.	.
.	.	.	.		.	.	.	.
.	.	.	.		.	.	.	.
ADFB	F001	7CF5	0		ADFB	F001	7CF5	0
FFE6	F021	7FFA	1111		FFE6	F021	7FFA	1111

Both the sampled reply data and the reference data are recorded along with any errors should they occur. The data is displayed in four word blocks corresponding to the ATCRBS reply block format. If any sample block should fail to match its associated reference block an error flag (*****) is inserted between them under the ERROR column to highlight the failure.

The Reply Generator functions for the transmission of Mode S replies, both short and long, are verified by the Reply Code Test accessed through the MRG Analog Loop Menu (see section 7.13.1.3, Reply Code Test, for further details).

7.3.2 Diagnostic Routines.

There are two diagnostic routines available for debugging the MRG boards. They are referred to as DIAG #1 and DIAG #2. When a particular diagnostic routine is

selected, the appropriate function menu appears on the control screen. The functions available on these menus are discussed in sections 7.3.2.1 and 7.3.2.2.

7.3.2.1 Diagnostic Routine No. 1.

The diagnostic routine No. 1 for the MRG gives the user total control in programming the MRG boards. When the routine is selected, the following message appears on the control screen and prompts the user for a response:

```
ADIAG:
ADIAG:  ENTER ITERATION COUNT (0=CONTINUOUS)
ADIAG>
```

The user then enters a decimal number at the control terminal. This number is a parameter used by the diagnostic routine to define the number of times any function will be executed when selected. If no value is entered, the parameter defaults to 0, which is the continuous mode. After the number is entered the RETURN key is pressed. Then the MRG diagnostic No. 1 menu appears on the control screen as shown below:

```
ADIAG:
ADIAG:  ***  MRG DIAGNOSTIC  ***
ADIAG:  1 - OUTPUT COMMAND
ADIAG:  2 - OUTPUT DATA
ADIAG:  3 - INPUT DATA
ADIAG:  4 - STATUS
ADIAG:  5 - EXIT DIAGNOSTIC
ADIAG:
ADIAG:  ENTER FUNCTION
ADIAG>
```

From the control terminal the user can select a function by typing the number preceding the function shown on the menu and then pressing the RETURN key. These functions are:

a. OUTPUT COMMAND. This function outputs a 16-bit command, defined by the user, to the Modeled Reply Generator. When this function is selected the user is prompted for the command as follows:

```
ADIAG:  ENTER COMMAND
ADIAG>
```

The user then enters the command in a hexadecimal format at the control terminal and presses the RETURN key. The structure of the command is defined in appendix D.

b. OUTPUT DATA. This function outputs a 16-bit data word, specified by the user, to the MRG. When this function is selected the user is prompted for the word as follows:

```
ADIAG:  ENTER DATA
ADIAG>
```

The user then enters the data in hexadecimal format at the control terminal and presses the RETURN key. The data entered can have any value. This data is then loaded into the primary or secondary memory buffer specified by a previously issued command. The format of the reply messages is defined in appendix D.

c. INPUT DATA. This function reads a 16-bit halfword from the MRG. The source of data is determined by a command issued prior to fetching the data. The data could be from either memory buffer (primary or secondary), the reply counters, or the controller via the input RAM. When this function is selected the following prompt appears on the control screen:

```
ADIAG:  DO YOU WANT DATA DISPLAYED ON TERMINAL?(Y/N)
```

If the user enters a Y, data is displayed on the control screen as follows:

```
ADIAG:  INPUT DATA = xxxx
```

where xxxx is a hexadecimal value.

If the user does not want data displayed, the N is entered followed by pressing the RETURN key. Generally, this is done to increase the rate the data is read from the MRG when using an oscilloscope for debugging purposes.

d. STATUS. This function reads the MRG device status byte and displays it on the control screen as follows:

```
ADIAG:  STATUS = xx
```

where xx represents the status byte in hexadecimal format. The structure of the status byte is defined in appendix D.

e. EXIT DIAGNOSTIC. This function returns the user to the MRG Maintenance Menu and leaves the MRG board in its current state. That is, if the MRG is placed in a particular mode it will remain in that mode after the user returns to the device menu.

7.3.2.2 Diagnostic Routine No. 2.

This diagnostic is a semiautomated debugging tool used to track down problems in the MRG. It is especially useful in checking the MRG interface buffer logic

allowing the user to load data blocks into either memory and to read data blocks from either memory. When these two operations are used the routine automatically displays the number of data blocks stored in both memories via the control screen. This is done by reading the reply block counters after completing each operation.

The following diagnostic menu appears on the control menu when the function DIAG #2 is selected:

```
ADIAG: *** MRG DIAGNOSTIC #2 ***
ADIAG:  1 - OUTPUT REPLY (I/F TEST)
ADIAG:  2 - INPUT  REPLY (I/F TEST)
ADIAG:  3 - OUTPUT REPLY (RF  TEST)
ADIAG:  4 - EXIT
```

As shown on the menu there are three operations available. Each of these operations are described in detail in the following paragraphs.

a. To load data blocks into a memory buffer.

b. To read data blocks from a memory buffer.

c. To transmit replies at RF.

When the operation "Output Reply (I/F Test)" is selected a series of prompts are generated requesting specific information from the user. The first prompt displayed is:

```
     ADIAG:
     ADIAG:  ENTER THE NUMBER OF ITERATIONS (0 = CONTINUOUS).
ADIAG>
```

The user than enters a decimal number at the control terminal. This number is used by the diagnostic routine to define the number of times this operation will be executed once all of the required information has been collected. If no value is entered the parameter defaults to 0 which is the continuous mode.

The next query is displayed on the control screen:

```
     ADIAG:
     ADIAG:  TO PRIMARY OR SECONDARY BUFFER ([P]/S)?
ADIAG>
```

The user's answer determines the buffer to which the reply is to be directed once the reply is defined. Note that the primary buffer is the default if just the RETURN key is pressed.

The next query is displayed on the control screen:

```
ADIAG:
ADIAG:  ATCRBS OR MODE S ([A]/M)?
ADIAG>
```

The user's answer to this prompt determines the next query displayed. If the user selects the ATCRBS option, the following prompt is displayed:

```
ADIAG:
ADIAG:  ENTER ATCRBS REPLY MESSAGE
ADIAG:  FORMAT:> XXXX XXXX XXXX XXXX <CR>
ADIAG:  DEFAULT  0020 0021 0000 FFFF
ADIAG>
```

At this prompt, the user then enters the ATCRBS reply desired. In this operation any bit pattern may be used. If a reply message is not entered, that is, only the RETURN key is pressed, then the default reply message is chosen.

If the user selects the MODE S option, the following prompts are displayed:

```
ADIAG:  ENTER MODE S REPLY MESSAGE (1ST 4 HALFWORDS)
ADIAG:  FORMAT:> XXXX XXXX XXXX XXXX <CR>
ADIAG:  DEFAULT  0020 0028 0000 0123
ADIAG>
```

```
ADIAG:  ENTER MODE S REPLY MESSAGE (LAST 6 HALFWORDS)
ADIAG:  FORMAT:> XXXX XXXX XXXX XXXX XXXX XXXX <CR>
ADIAG:  DEFAULT  4567 89AB CDEF A5A5 C3C3 FFFF
ADIAG>
```

At these prompts, the user then enters the Mode S reply desired. Again, if a reply message is not entered then the default reply message is chosen.

In either case, the information received in response to the above queries is sent to the buffer selected (primary or secondary) the number of times requested. After the operation is completed, the reply counters are read and the number of replies stored in each memory is displayed on the control screen as shown below:

```
ADIAG:  PRIMARY REPLY COUNT     =  XX
ADIAG:  SECONDARY REPLY COUNT   =  XX
```

When the operation "Input Reply (I/F Test)" is selected a series of prompts similar to those of the operation "Output Reply (I/F Test)" are generated

requesting specific information from the user. This series of prompts are shown below:

```
     ADIAG:  FROM PRIMARY OR SECONDARY BUFFER ([P]/S)?
ADIAG> __ <RETURN>
     ADIAG:
     ADIAG:  ATCRBS OR MODE S ([A]/M)?
ADIAG> __ <RETURN>
     ADIAG:
     ADIAG:  ENTER THE NUMBER OF ITERATIONS (0 = CONTINUOUS).
ADIAG> ____ <RETURN>
```

After the above three queries are answered, the information is used to perform the requested operation. In all, the user has four distinct options from this operation:

a. Read ATCRBS replies from the Primary Buffer.

b. Read Mode S replies from the Primary Buffer.

c. Read ATCRBS replies from the Secondary Buffer.

d. Read Mode S replies from the Secondary Buffer.

In each case, the specified number of replies are read from the selected buffer. Note that the reply type automatically determines the number of halfwords to be read, four halfwords for ATCRBS replies and ten halfwords for Mode S replies. After the operation is completed, the reply counters are sampled and the number of reply blocks remaining in each memory buffer is displayed on the control screen as shown below:

```
ADIAG:  PRIMARY REPLY COUNT     =  XX
ADIAG:  SECONDARY REPLY COUNT   =  XX
```

If the number of replies requested to be read from a memory buffer exceeds the number of replies stored in that memory buffer, a message is displayed on the control screen indicating the condition. The two possible messages are:

```
ADIAG:  *** PRIMARY BUFFER IS EMPTY ***
```

or,

```
ADIAG:  *** SECONDARY BUFFER IS EMPTY ***
```

When the operation "Output Reply (RF Test)" is selected, the user is queried with a series of prompts. The first prompt displayed is:

```
     ADIAG:  ENTER THE NUMBER OF ITERATIONS (0 = CONTINUOUS).
ADIAG>
```

The user then enters a decimal number at the control terminal. This number is used by the diagnostic routine to define the number of times the operation will be executed once the required information has been collected. If no value is entered the parameter defaults to 0 which is the continuous mode.

Next the user is prompted by the query,

```
ADIAG:  SELECT REPLY GENERATOR ([1],2,3,OR 4).
ADIAG>
```

The default response to this query is Reply Generator 1, as indicated by the brackets. The user's response to this prompt determines the modeled reply generator that is employed.

The next query requiring a response is:

```
ADIAG:  SELECT CW STATE(Y OR [N]).
ADIAG>
```

This prompt gives the user the option of turning on the Pulse Amplitude Modulation (PAM) switch of the specified modeled reply generator continuously.

The next query requiring a response is:

```
ADIAG:  ATCRBS OR MODE S ([A]/M)?
ADIAG>
```

The answer to this query determines which of the following two prompts appears on the control screen:

```
ADIAG:
ADIAG:  ENTER ATCRBS REPLY MESSAGE
ADIAG:  FORMAT:> XXXX XXXX XXXX XXXX <CR>
ADIAG:  DEFAULT: 0020 0021 0000 FFFF
ADIAG>
```

or,

```
ADIAG:  ENTER MODE S REPLY MESSAGE (1ST 4 HALFWORDS)
ADIAG:  FORMAT:> XXXX XXXX XXXX XXXX <CR>
ADIAG:  DEFAULT: 0020 0028 0000 A801
ADIAG>

ADIAG:  ENTER MODE S REPLY MESSAGE (LAST 6 HALFWORDS)
ADIAG:  FORMAT:> XXXX XXXX XXXX XXXX XXXX XXXX <CR>
ADIAG:  DEFAULT: 2345 6789 ABCD EFFF 0F0F 00FF
ADIAG>
```

In either case, the information received in response to the above queries is sent to the reply generator selected the number of times requested. When this operation is completed the following message is displayed on the control screen:

ADIAG: OUTPUT REPLY (RF TEST) IS COMPLETE.

Selection of the CONTINUOUS mode, as described above, causes the initiation of the subtask CHGREPLY. This task is resident in memory and is used to change the contents of the reply messages being transmitted. Figure 7.3.2.2-1 shows the menu format of options available under CHGREPLY.

```
   CHGREPLY:
   CHGREPLY:  DIAGNOSTIC IN CONTINUOUS MODE
   CHGREPLY:
   CHGREPLY:  Added delay between replies: 1 millisecond(s)
   CHGREPLY:
   CHGREPLY:  CURRENT REPLY MESSAGE:  XXXX XXXX XXXX XXXX
   CHGREPLY:
   CHGREPLY:  1 - Reply Time = IIII (XXXX, 20-bit Hex field)
   CHGREPLY:  2 - Mainbeam/Sidelobe = X (1-bit hex field)
   CHGREPLY:  3 - Type = X  (4-bit hex field)
   CHGREPLY:  4 - Power (Attenuation) =IIdBm(XX, 6-bit field)
   CHGREPLY:  5 - Left/Right Boresight = X  (1-bit hex field)
   CHGREPLY:  6 - Monopulse setting = XX  (8-bit hex field)
   CHGREPLY:  7 - ATCRBS Code = XXXX  (2-byte Hex field)
   CHGREPLY:
   CHGREPLY:  ('A' to change message; 'D' to change delay)
   CHGREPLY:  Enter no. to change or 'E' to exit
CHGREPLY>
```

FIGURE 7.3.2.2-1. SAMPLE FORMAT OF CHGREPLY OPTION SCREEN.

Referring to Figure 7.3.2.2-1 there are seven options listed plus the three at the bottom of the menu. The following is a description of each option from this menu:

a. Reply Time. This function allows the user to change the Reply Time field of the current message, which corresponds to the first 20 bits of the Reply Message. The IIII field depicts the integer value of this field and XXXXX is the hexadecimal representation, where the least significant bit represents 62.5 nanoseconds. If the user selects this function the following prompt appears on the control screen:

```
   CHGREPLY:  Enter reply time (in 20-bit Hex field:  XXXXX)
CHGREPLY>
```

The user then enters the Reply Time desired in hexadecimal format.

b. Mainbeam/Sidelobe. This function allows the user to select mainbeam or sidelobe power field, which corresponds to bit 10 in the second word of the reply (bit 0 is the MSB and bit 15 is the LSB in each word). The X field depicts the current value of the 1-bit field, where a 1 would signify mainbeam and a 0 would signify sidelobe. If the user selects this function the following prompt appears on the control screen:

```
CHGREPLY:  Enter Mainbeam(1)/Sidelobe(0)
CHGREPLY>
```

The user then enters either a 1 or a 0.

c. Type. This function allows the user to change the type field of the current reply message which corresponds to the least significant nibble of the second word. The X field signifies the current reply message type. If the user selects this function the following prompt appears on the control screen:

```
CHGREPLY:  Enter Type field (1, 2, 4, or 8)
CHGREPLY>
```

The user then enters one of the four type codes listed below:

1 - Nondiscrete Reply (ATCRBS)

2 - Mode S All-Call Reply

4 - Mode S Surveillance Reply

8 - Mode S Comm-B Reply

d. Power (Attenuation). This function allows the user to change the power attenuation field of the current reply message. The II field depicts the integer value of this field and XX is the hexadecimal value. The 6-bit power attenuation field, located in the upper byte of the third word, has a range from 0 to 63 dBm. If the user selects this function the following prompt appears on the control screen:

```
CHGREPLY:  Enter Power field (in decimal: 0-63 dBm)
CHGREPLY>
```

The user then enters the desired power attenuation level in decimal format.

e. Left/Right Boresight. This function allows the user to select left or right of boresight field, which corresponds to bit 7 in the third word of the reply. The X field depicts the current value of the 1-bit field, where a 1 would signify left of boresight and a 0 would signify right of boresight. If the user selects this function the following prompt appears on the control screen:

```
CHGREPLY:  Enter Left(1)/Right(0) of Boresight
CHGREPLY>
```

The user then enters either a 1 or a 0.

f. Monopulse Setting. This function allows the user to change the monopulse field of the current reply message. The XX field depicts the 8-bit hexadecimal value of this field, located in the lower byte of the third word. If the user selects this function the following prompt appears on the control screen:

```
CHGREPLY:  Enter Monopulse field (8-bit Hex field: XX)
CHGREPLY>
```

The user then enters the desired monopulse setting in hexadecimal format.

g. ATCRBS Code. This function allows the user to change the ATCRBS code within the reply message. This 2-byte hexadecimal field, depicted by the XXXX, corresponds to the fourth word of the reply. Selection of this function will cause the following prompt to appear on the control screen:

```
CHGREPLY:  Enter ATCRBS Code (2-byte hex field -> XXXX)
CHGREPLY>
```

The user then enters the 2-byte field in hexadecimal format.

h. Mode S Data. This function allows the user to change the Mode S data within the reply message. This 14-byte hexadecimal field, depicted by the seven XXXX fields (not shown), corresponds to the fourth through tenth words of the reply. Selection of this function causes the following prompt to appear on the control screen:

```
CHGREPLY:  Enter Mode S data - words 4-10
CHGREPLY:  XXXX XXXX XXXX XXXX XXXX XXXX XXXX
CHGREPLY>
```

The user then enters the seven 2-byte fields (XXXX) in hexadecimal format.

i. A to change message. This function allows the user to change the entire message at once. If this function is selected and the message type corresponds to ATCRBS, the following prompt appears on the control screen:

```
CHGREPLY:  Enter Reply Message
CHGREPLY:  XXXX XXXX XXXX XXXX
CHGREPLY>
```

The user then enters the four 2-byte fields (XXXX) in hexadecimal format. If this function is selected and the message type corresponds to a Mode S type, the following prompt appears on the control screen:

```
CHGREPLY:  Enter Reply Message
CHGREPLY:  XXXX XXXX XXXX XXXX XXXX XXXX XXXX XXXX XXXX XXXX
CHGREPLY>
```

The user then enters the ten 2-byte fields (XXXX) in hexadecimal format.

j. D to change delay. This function allows the user to change the software delay added between each reply sent out. If the user selects this function the following prompt appears on the control screen:

```
CHGREPLY:  Enter delay
CHGREPLY>
CHGREPLY:  Enter time unit:
CHGREPLY:  1 - millisecond
CHGREPLY:  2 - second
CHGREPLY:  3 - minute
CHGREPLY>
```

The user first enters the number of units of delay desired followed by the type of unit. If the user enters zero 0 for the delay then the second prompt is omitted and no delay is added between replies.

k. E to exit. This function returns the user back to the MRG Maintenance menu. The test concludes with the following message on the response screen:

```
OUTPUT REPLY (RF TEST) IS COMPLETE
```

The diagnostic No. 2 menu appears on the control screen after any of the operations described above have completed. This gives the user the option of running the same operation again, running a different operation, or exiting the routine. When exiting the routine the user is first prompted with the query:

```
ADIAG:  DISARM AND RESET MRG ([Y]/N) ???
ADIAG>
```

The response to this query allows the user the option of resetting the MRG depending on further debugging requirements.

7.4 FRUIT REPLY GENERATOR.

The device menu for the Fruit Reply Generator (FRG) is shown in figure 7.4.1 is it is shown on the control screen. Access to this menu is through option 7 of the ARIES Maintenance Menu (refer to figure 4-2).

```
        ADIAG:
        ADIAG:  ****************************
        ADIAG:  *** FRG MAINTENANCE MENU ***
        ADIAG:  ****************************
        ADIAG:  1 - VALIDATION
        ADIAG:  2 - DUMP
        ADIAG:  3 - HELP
        ADIAG:  4 - EXIT
        ADIAG:  5 - DIAG #1
        ADIAG:  6 - DIAG #2
        ADIAG:  7 - DIAG #3
        ADIAG:  8 - DIAG #4
        ADIAG:  9 - DATA BASE GENERATION
        ADIAG: 10 - STATISTICS
    ADIAG>
```

FIGURE 7.4-1. FRG MAINTENANCE MENU SCREEN

Referring to figure 7.4-1, there are ten options available on the Fruit Reply Generator Maintenance Menu:

a. To access the FRG Validation Test Menu.

b. To access the FRG Validation Data Dump Menu.

c. To access the FRG help text file.

d. To return to the System Maintenance Menu.

e. To access the diagnostic No. 1 function menu.

f. To access the diagnostic No. 2 function menu.

g. To access the diagnostic No. 3 function menu.

h. To access the diagnostic No. 4 function menu.

i. To access the Data Base Generation Menu.

j. To access the FRG Statistics Menu.

Selecting option 1, the user is moved to a third level menu. This menu, the Fruit Reply Generator Validation Test Menu, allows the user to run any one of six validation tests separately or as a set (see section 7.4.1).

Selecting option 2, the user is also moved to a third-level menu. This menu, the Fruit Reply Generator Validation Data Dump Menu, allows the user to run any one of six validation test data dumps separately or as a set (see Section 7.4.1).

Selecting option 3, the FRG help text file is displayed on the response screen. This file provides a brief description of all the routines accessible under the FRG Maintenance Menu (refer to appendix C for the listing of this help file).

Selecting option 4, the user is returned to the System Maintenance Menu.

Selecting option 5 moves the user to the diagnostic No. 1 menu. This routine is described in section 7.4.2.

Selecting option 6 moves the user to the diagnostic No. 2 menu. This routine is described in section 7.4.3.

Selecting option 7 moves the user to the diagnostic No. 3 menu. This routine is described in section 7.4.4.

Selecting option 8 moves the user to the diagnostic No. 4 menu. This routine is described in section 7.4.5.

Selecting option 9 moves the user to the Data Base Generation Menu. This routine is described in section 7.4.6.

Selecting option 10 moves the user to the FRG Statistics Menu. This routine is described in section 7.4.7.

7.4.1 Validation Test and Dump Routines.

Access to the Fruit Reply Generator validation tests is through the VALIDATION option on the FRG Maintenance Menu. When VALIDATION is selected, the FRG Validation Menu appears on the control screen as shown in figure 7.4.1-1.

Referring to figure 7.4.1-1, there are five separate validation tests that check various modules of the FRG. The first validation test verifies the FRG interface buffer. The second validation test verifies the controller and the buses tying the controller with the interface buffer. The third and fourth validation tests verify the ATCRBS and Mode S Random Process Generators (ARPG and MRPG) and the buses tying these generators to the controller. The fifth validation test verifies the reply generators and the buses tying the generators to the controller. The sixth validation test verifies that the FRG can successfully generate and change fruit environments.

Before descibing the validation tests a general description of the FRG hardware layout is appropriate to understand the approach taken to verify the FRG. The FRG can be divided into five principle hardware blocks: the FRG interface buffer, the FRG controller, the ATCRBS RPG, the Mode S RPG, and the target reply generators, as dipicted in figure 7.4.1-2. The interface buffer is primarily used as a temporary storage for parameter and reply data being past to and from the FRG. There are three separate 16 x 16 word buffers: the fruit environment parameter buffer, the reply data buffer, and the output data buffer. The data within these buffers can be sent to the controller or looped back to the CPU.

```
        ADIAG:
        ADIAG:  ***   FRG VALIDATION   ***
        ADIAG:  1 - INTERFACE LOOPBACK TESTS
        ADIAG:  2 - MICROPROCESSOR LOOPBACK TESTS
        ADIAG:  3 - ATCRBS RPG TEST
        ADIAG:  4 - MODE S RPG TEST
        ADIAG:  5 - REPLY GENERATOR LOOPBACK TESTS
        ADIAG:  6 - FRUIT GENERATION TEST
        ADIAG:  7 - EXIT
        ADIAG:  0 - ALL (DEFAULT)
    ADIAG>
```

FIGURE 7.4.1-1. FRG VALIDATION TEST MENU SCREEN

The FRG controller is a high speed bit-slice microprocessor with its program stored in nonvolatile memory (Program Read Only Memory). The program contains all of the routines for normal operation and diagnostic support operations.

The ATCRBS and Mode S RPG's, once loaded with the four halfword parameter block, will generate pseudorandom reply messages. The types of messages generated from both RPG's are determined by the contents of the parameter block (refer to appendix D for an explanation of the parameter and reply block formats). The ATCRBS parameter block determines the mainbeam/sidelobe ratio, fixed code ratio, the fixed code value, and the fruit rate. Mode S parameter block is similar, except the fixed code ratio is replaced with the long/short reply ratio. The messages generated are fetched by the controller sent either to the reply generators in normal operation or back to the CPU under the diagnostic mode.

The fruit reply generators accept reply blocks from the controller and assemble the reply code train for transmission. In both normal and diagnostic operation, modulation control signals are generated to drive an IF reply generator. Under the diagnostic mode replies can be directed to a specified fruit reply generator.

7.4.1.1 Interface Loopback Test.

The Interface Loopback Test verifies the data lines between the CPU and the FRG interface as well as test the interface logic. This routine is essentially broken down into three parts: the fruit environment parameter interface loopback test, the ATCRBS reply loopback test, and the Mode S reply loopback test.

In the parameter interface test, five sets of 8 halfwords (16 bits) from a test data table are written into the parameter buffer while it is in the write mode. Once the buffer is full, which is after eight halfwords are written into it, the buffer switches to the read mode and the data is read back by the CPU. A comparison is then performed with these data to what was initially sent to the buffer. Since the buffer is initially set in the write mode (switches to the read mode when it is loaded and back to the write mode after being read), read or write

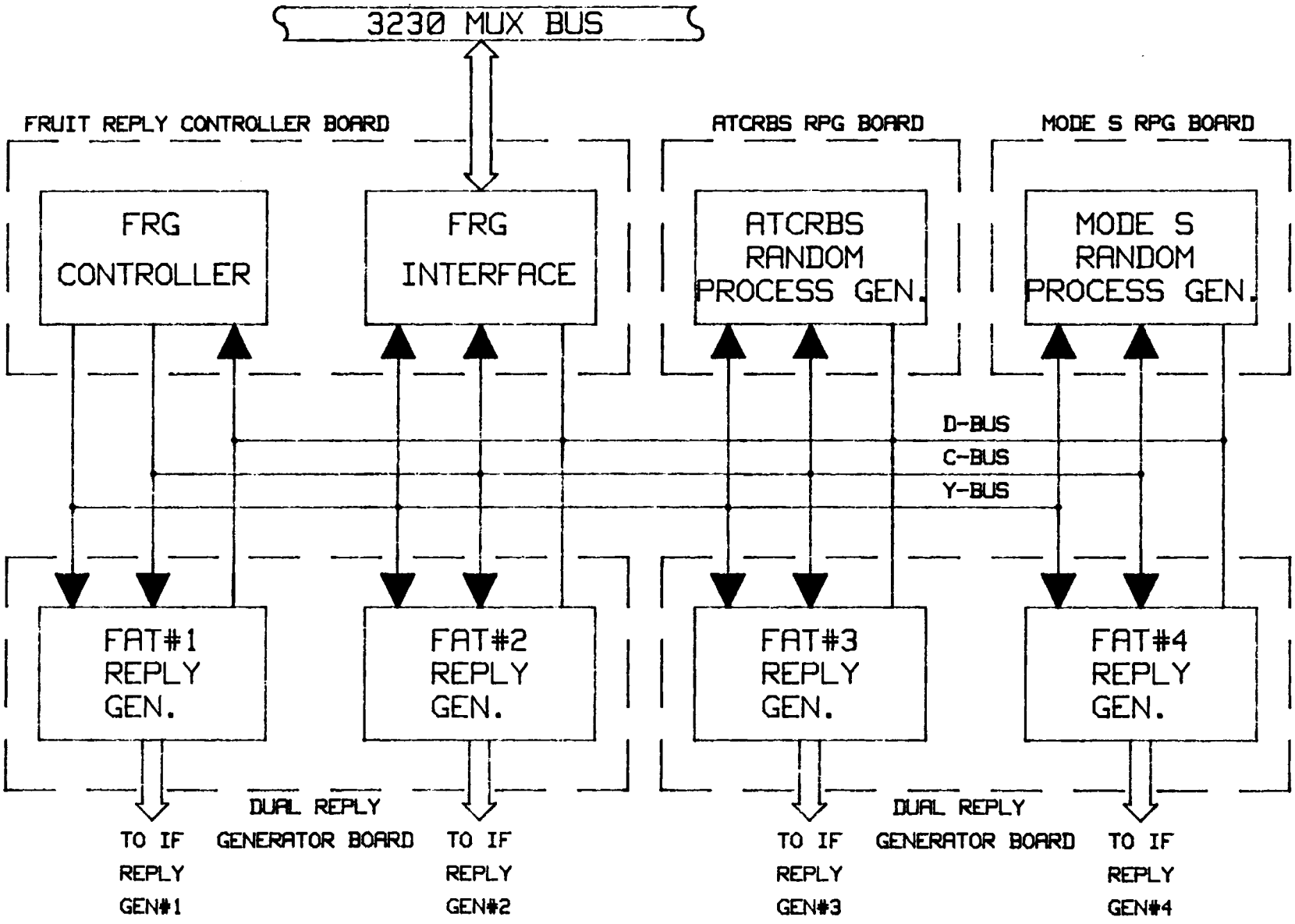

FIGURE 7.4.1-2. FRG DIGITAL CONFIGURATION

mode timeout flags may appear in the data dump if the proper mode is not set within a predetermined period of time. The read/write mode is checked through the FRG interface status word.

The ATCRBS and the Mode S reply interface tests are both identical to the parameter interface test, except in the ATCRBS test where the data is written to the buffer in ten sets of four halfwords and in the Mode S test the data is written in four sets of ten halfwords.

The data table used for this test consists of 40 halfword pattern to check out each bit position. This pattern consist of a running one sequence, a running zero sequence and an alternating bit sequence of AAAA and 5555. The data dump format for all three interface tests is the same. A sample format is shown in the following example:

>>> PARAMETER INTERFACE LOOPBACK TEST

REF. DATA	TEST DATA	ERROR FLAGS
8000	8000	
4000	4000	
2000	2000	
.	.	
.	.	
7FFF	7FFF	
BFFF	BFFF	
DFFF	DFFF	
.	.	
.	.	
5555	5555	
AAAA	AAAA	

7.4.1.2 Microprocessor Loopback Test.

The Interface Loopback Test is a prerequisite for the successful operation of this test. The hardware functions checked by Interface Loopback Test are needed to support the microprocessor checkout. Therefore, the Interface Loopback Test must pass successfully in order for the Microprocessor Loopback Test to be successful.

The Microprocessor Loopback Test verifies the operational status of the FRG's bit-slice microprocessor and its supporting input and output data buses and command bus. This is accomplished by placing the controller in its loopback diagnostic mode. In this mode the controller essentially reads data in sets of four halfwords from the reply buffer, via the D-bus, and transfers them to the output buffer, via the Y-bus, which is then read back to the CPU for comparison with the data initially loaded into the reply buffer. The data table and data dump format is identical to those of the Interface Loopback Tests.

7.4.1.3 ATCRBS Random Process Generator Test.

The Interface Loopback and the Microprocessor Loopback Tests are prerequisites for the successful operation of this test. The hardware functions checked by these tests are needed to support the ARPG checkout. Therefore, the Interface Loopback and the Microprocessor Loopback Tests must pass successfully in order for the ARPG Test to be successful.

The ARPG Test is essentially broken into three separate tests. In each test the ARPG is loaded with a different set of fruit environment parameters and a hundred replies are read back and compared to a reference table generated by the Data Base Generation Routine (see section 7.4.3). The three sets of fruit environment replies collected are as follows: 0% mainbeam, 100% fixed code and 1K fruit per second; 50% mainbeam, 50% fixed code, and 16K fruit per second; and 100% mainbeam, 0% fixed code, and 64K fruit per second. The following example shows the data dump format for one of the three tests.

FIXED CODE = A022
50% MAINBEAM / 50% FIXED CODE
FRUIT RATE: 16K FRUIT PER SEC.

ATCRBS RPG DATA				ERROR FLAGS	ATCRBS REF DATA			
W1	W2	W3	W4		W1	W2	W3	W4
B4	B021	3CD8	D002		B8	B021	3CD8	D002
5A	5021	3CAC	C002		5A	5021	3CAC	C002
12D	2021	3CD6	9402		12D	2021	3CD6	9402
196	9001	3CAB	A022		196	9001	3CAB	A022
CB	4001	3DD5	D002		CB	4001	3DD5	D002
165	A021	3DAA	A022		165	A021	3DAA	A022
.	.	.	.		.	.	.	.
.	.	.	.		.	.	.	.
.	.	.	.		.	.	.	.

If a status error should occur when the parameter block is being loaded or the replies are being read from the controller's buffer, then an error message will appear in the data dump file. The error message will appear as one of the following:

PARAMETER BUFFER WRITE MODE TIMEOUT OCCURRED

or

INPUT BUFFER READ MODE TIMEOUT OCCURRED

If one of these errors occur, the remainder of the test will be aborted.

7.4.1.4 Mode S Random Process Generator Test.

The Interface Loopback and the Microprocessor Loopback Tests are prerequisites for the successful operation of this test. The hardware functions checked by these tests are needed to support the MRPG checkout. Therefore, the Interface Loopback and the Microprocessor Loopback Tests must pass successfully in order for the MRPG Test to be successful.

The MRPG Test, like the ARPG Test, is broken into three separate tests. In each test the MRPG is loaded with a different set of fruit environment parameter blocks and a 100 replies are read back and compared to a reference table generated by the Data Base Generation Routine (see section 7.4.3). The three sets of fruit environment replies collected are as follows: 0% mainbeam, 100% long replies and 10 fruit per second; 50% mainbeam, 50% long replies, and 160 fruit per second; and 100% mainbeam, 0% long replies, and 640 fruit per second. The following example shows the data dump format for one of the three tests.

0% MAINBEAM / 100% LONG REPLIES
FRUIT RATE: 10 FRUIT PER SEC.

MODE S RPG DATA						ERROR FLAGS	MODE S REF DATA					
W1	W2	W3	W4	...	W10		W1	W2	W3	W4	...	W10
FFFF	D008	50AC	A20C	...	FFFE		FFFF	D008	50AC	A20C	...	FFFE
7FFF	D008	50D6	A506	...	67FF		7FFF	D008	50D6	A506	...	67FF
FFFF	B008	50AB	A00B	...	99FF		FFFF	B008	50AB	A00B	...	99FF
FFFF	B008	51D5	A305	...	66CF		FFFF	B008	51D5	A305	...	66CF
CFFF	D008	51AA	A40A	...	5933		CFFF	D008	51AA	A40A	...	5933
67FF	D008	51D5	A305	...	69CC		67FF	D008	51D5	A305	...	69CC
.	.	.	.	.	.		.	.	.	.	.	.
.	.	.	.	.	.		.	.	.	.	.	.
.	.	.	.	.	.		.	.	.	.	.	.

If a status error should occur when the parameter data is being loaded or the replies are being read from the controller's buffer, then an error message will appear in the data dump file. The error message will appear as one of the following:

PARAMETER BUFFER WRITE MODE TIMEOUT OCCURRED

or

INPUT BUFFER READ MODE TIMEOUT OCCURRED

If one of these errors occur the remainder of the test will be aborted.

7.4.1.5 Reply Generator Loopback Tests.

The Interface Loopback and the Microprocessor Loopback Tests are a prerequisite for the successful operation of this set of tests. The hardware functions checked

by these tests are used in supporting the checkout of the reply generators. Therefore, these tests must pass successfully in order for the Reply Generator Tests to be successful.

The Reply Generator Loopback Tests verify that all four reply generators can successfully assemble ATCRBS replies for transmission. This is accomplished with the execution of the reply generator loopback diagnostic support routine by the controller (see appendix D, FRG command operation select field) and with the use of reply generator diagnostic support logic. This logic samples the ATCRBS modulation pulses when the reply is in transmission along with sampling the power, monopulse, left/right of boresight, and mainbeam/sidelobe control lines which drive the associated IF Reply Generator panel.

Under these tests, the CPU sends a predefined set of 50 replies to each generator. Each reply is written in the reply buffer after the CPU verifies the buffer is in a write mode. The controller, in turn, will fetch the reply, load it in the specified reply generator, and wait for sampled data from the Reply Generator. When the sampled data is returned, it is stored in the output buffer for subsequent reading by the CPU. This sequence is repeated until all 50 replies are sampled. If no data is returned by the reply generator after 4 milliseconds the controller automatically loads the output buffer with a dummy pattern of FFFF signifying that no data were returned. If no data is received after 5 milliseconds the program automatically substitutes for the expected data sample a dummy pattern of BBBB signifying that no data were returned by the controller.

The test is repeated four times; once for each of the four Fruit Reply Generators in the FRG. The pass criteria for these tests is the successful comparison of the 50 reply samples read from the FRG with respect to the reply blocks sent. If any comparison should not match, the test is declared a failure. The result of each test is recorded on the Summary Log file.

The data dump file generated by these tests is formatted as shown below. The complete listing of the data file can be found in appendix B.

RPG DATA				ERROR	RPG REFERENCE DATA			
W1	W2	W3	W4		W1	W2	W3	W4
51EB	1	1C05	0		51EB	1	1C05	0
A3D6	21	1F0A	1111		A3D6	21	1F0A	1111
F5C1	1	2004	2222		F5C1	1	200F	2222
47AC	1021	2314	3333		47AC	1021	2314	3333
.	.	.	.		.	.	.	.
.	.	.	.		.	.	.	.
.	.	.	.		.	.	.	.
5C10	F021	7BF0	FFFF		5C10	F021	7BF0	FFFF
ADFB	F001	7CF5	0		ADFB	F001	7CF5	0
FFE6	F021	7FFA	1111		FFE6	F021	7FFA	1111

Both the sampled reply data and the reference data are recorded along with any errors, should they occur. The data displayed in four-word blocks corresponding to the ATCRBS reply block format. If any sample block should fail to match its associated reference block an error flag ***** is inserted between them under the ERROR column to highlight the failure.

The reply generator functions for the transmission of Mode S replies, both long and short, are verified by the Reply Code Test accessed through the FRG Analog Subsystem Menu (See section 7.14.1.3, Reply Code Test, for further details).

7.4.1.6 Fruit Generation Validation Test.

The Fruit Generation Validation Test verifies that the FRG can generate both ATCRBS and Mode S fruit environments in real time operation. This is accomplished by placing the FRG in the normal mode of operation and updating each fruit environment independent of the other, at a rate equivalent to updating 11.25 degree sectors at a scan rate of 4.7 seconds. During this test the device status byte is recorded if the FRG generates an interrupt request.

All of the previous FRG validation tests are prerequisites for the successful operation of this test. This test requires the complete use of all of the hardware in the FRG. The FRC passes fruit parameter information from the FRC Interface to the random process generators. Then the FRC reads fruit reply blocks from the random process generators and loads them into the four available fruit reply generators for transmission.

Under this test a sequence of fruit parameters blocks are loaded into the FRG. These blocks change the two fruit environments independent of each other covering the following cases:

a. Turning on and off ATCRBS fruit generation with Mode S fruit generation off.

b. Turning on and off Mode S fruit generation with ATCRBS fruit generation off.

c. Turning on and off ATCRBS fruit generation with Mode S fruit generation on and fixed.

d. Turning on and off Mode S fruit generation with ATCRBS fruit generation on and fixed.

e. Turning on and off ATCRBS and Mode S fruit generation simultaneously.

f. Changing ATCRBS fruit generation with Mode S fruit generation off.

g. Changing Mode S fruit generation with ATCRBS fruit generation off.

h. Changing ATCRBS fruit generation with Mode S fruit generation on and fixed.

i. Changing Mode S fruit generation with ATCRBS fruit generation on and fixed.

j. Changing ATCRBS and Mode S fruit generation simultaneously.

The sequence above is repeated for light, moderate, and heavy fruit environments.

The pass criteria for this test is the successful loading and updating of the fruit environment with no interrupt requests generated by the FRG. An interrupt request from the FRG specifies an error detected. The particular error detected is found in the device status byte. If any interrupts occur then the test is declared a failure. The result of the test is recorded in the Summary Log and the fruit parameter table and error flags, should they occur, are written into the data dump file.

If the fruit parameter RAM, part of the FRC Interface, is not available to accept fruit parameter information, the test will time out and will be considered unsuccessful. This is true even if no interrupts are generated by the FRG.

Part of the data dump file generated by this routine is formatted as shown below:

```
nnn STATUS ERRORS DETECTED

ATCRBS FRUIT   MODE S FRUIT    ERROR STATUS BYTE
RATE PATTERN   RATE PATTERN    (LOAD:  L=LIGHT, M=MODERATE, H=HEAVY)

      0              0
      1              0         L ss   M ss   H ss
      0              0
      1              0         L ss   L ss   L ss   M ss
      1              0
      1              0
      0              0
      0              0
      0              1
      0              0
      0              1
      0              1
      0              1
      0              0
      0              0
      0              1
      1              1
      .              .
      .              .
      .              .
```

As shown above, the first line displays the total number of interrupts (nnn) generated during the validation test. Below this line, three columns with headers identifying each column is presented. The first two columns represents the update sequence for ATCRBS and Mode S fruit environments, respectively. This sequence exercises all of the sector update requirements specified in appendix IX of the Mode S Sensor Specification document (FAA-E-2716). This sequence is repeated for light, moderate, and heavy fruit rates. The third column displays errors, if any should occur.

Referring to line two of the fruit update sequence, the occurrence of errors at that part of the sequence is illustrated for light, moderate, and heavy fruit environments (L ss M ss H ss). Also presented is the status byte read from

the FRG to identify the fault condition. Referring to the forth line of the fruit update sequence, the occurrence of multiple errors within a sector is illustrated (L ss L ss L ss . . .). Again, note that the status byte always accompanies the error flag.

Along with the test results, additional information is presented in the beginning of the dump file to help the user clarify the test conditions and the test results. The status byte format is defined so that the user can determine the fault condition which generated an interrupt, if one should occur. Also, two fruit rate selection tables illustrate the actual fruit rates that are run during each sequence. Refer to appendix B for a complete listing of this file.

7.4.2 Diagnostic Routines.

There are four diagnostic routines available for debugging the FRG. They are referred to as DIAG #1, DIAG #2, DIAG #3, and DIAG #4. When a particular diagnostic routine is selected, the appropriate function menu appears on the control screen. The functions available on these menus are discussed in sections 7.4.2.1 through 7.4.2.4.

7.4.2.1 Diagnostic Routine No. 1.

The diagnostic routine No. 1 for the FRG gives the user total control in programming the FRG. When the routine is selected, the following message appears on the control screen and prompts the user for a response:

```
     ADIAG:
     ADIAG:  ENTER ITERATION COUNT (0=CONTINUOUS)
ADIAG>
```

The user then enters a decimal number at the control terminal. This number is a parameter used by the diagnostic routine to define the number of times any function will be executed when selected.

If no value is entered, the parameter defaults to 0 which is the continuous mode. After the number is entered the RETURN key is pressed. The FRG diagnostic No. 1 menu then appears on the control screen as shown below:

```
     ADIAG:
     ADIAG:  ***  FRG DIAGNOSTIC  ***
     ADIAG:  1 - OUTPUT COMMAND
     ADIAG:  2 - OUTPUT DATA
     ADIAG:  3 - INPUT DATA
     ADIAG:  4 - SHOW INTERRUPT COUNTER
     ADIAG:  5 - CLEAR INTERRUPT COUNTER
     ADIAG:  6 - STATUS
     ADIAG:  7 - EXIT DIAGNOSTIC
     ADIAG:
     ADIAG:  ENTER FUNCTION
ADIAG>
```

From the control terminal the user can select a function by typing the number preceding the function shown on the menu and then pressing the RETURN key. These functions are:

a. OUTPUT COMMAND. This function outputs a 16-bit command, defined by the user, to the Fruit Reply Generator. When this function is selected the user is prompted for the command as follows:

```
ADIAG:  ENTER COMMAND
ADIAG>
```

The user then enters the command in a hexadecimal format at the control terminal and presses the RETURN key. The structure of the command is defined in appendix D.

b. OUTPUT DATA. This function outputs one 16-bit halfword, defined by the user, to the FRG. When this function is selected the user is prompted for the word as follows:

```
ADIAG:  ENTER DATA
ADIAG>
```

The user then enters the data in hexadecimal format at the control terminal and presses the RETURN key. The data entered can have any value. This data is either loaded into the fruit parameter buffer or the reply data buffer as prespecified via a command. The format for the Fruit Reply Generator messages is defined in appendix D.

c. INPUT DATA. This function reads one 16-bit halfword from the FRG. The data is read from the FRG Output Data Buffer. When this function is selected the following prompt appears on the control screen:

```
ADIAG:  DO YOU WANT DATA DISPLAYED ON TERMINAL?(Y/N)
```

If the user enters a Y, data is displayed on the control screen as follows:

```
ADIAG:  INPUT DATA = xxxx
```

where xxxx is a hexadecimal value.

If the user does not want data displayed, an N is entered followed by pressing the RETURN key. Generally, this is done to increase the rate the data is read from the FRG when using an oscilloscope for debugging purposes.

d. SHOW INTERRUPT COUNTER. This function reads the memory location which holds the number of times the FRG ISR was called and displays the count on the control screen as follows:

```
ADIAG:
ADIAG:  INTERRUPT COUNT = xxxx
```

where xxxx represents the number of interrupts serviced.

e. CLEAR INTERRUPT COUNTER. This function clears the memory location which holds the number of times the FRG ISR was called and then executes the SHOW INTERRUPT COUNT function which will display the following on the control screen:

```
ADIAG:
ADIAG:  INTERRUPT COUNT =    0
```

f. STATUS - This function reads the FRG device status byte and displays it on the control screen as follows:

```
ADIAG:  STATUS = xx
```

where xx represents the status byte in hexadecimal format. The structure of the status byte is defined in Appendix D.

g. EXIT DIAGNOSTIC. This function returns the user to the FRG Maintenance Menu and leaves the FRG in its current state, i.e. if the FRG is placed in a particular diagnostic mode it will remain in that mode after the user returns to the device menu.

7.4.2.2 Diagnostic Routine No. 2.

The FRG diagnostic No. 2 is a semiautomated debugging tool used to track down problems on the ARPG board. The user has the ability to define any set of fruit parameters and then generate fruit replies for the given rate.

The following diagnostic menu appears on the control menu when this function is selected:

```
ADIAG: *** FRG DIAGNOSTIC #2 ***
ADIAG:  1 - SHOW DEVICE CONTROLLER STATUS
ADIAG:  2 - SHOW FRG INTERFACE STATUS
ADIAG:  3 - SEND COMMAND
ADIAG:  4 - SET FRUIT PARAMETERS
ADIAG:  5 - SHOW REPLY PARAMETERS
ADIAG:  6 - EXIT DIAGNOSTIC
```

As shown on the menu there are six functions available:

a. SHOW DEVICE CONTROLLER STATUS. This function reads the FRG controller status byte and displays it on the control screen as follows:

```
ADIAG:
ADIAG:  STATUS READ FROM DEVICE = xx
```

where xx represents the status byte in hexadecimal format. The structure of the status byte is defined in appendix D.

b. SHOW FRG INTERFACE STATUS. This function reads the FRG interface status halfword and displays it on the control screen as follows:

```
ADIAG:
ADIAG:  STATUS READ FROM FRG INTERFACE = xxxx
```

where xxxx represents the status halfword in hexadecimal format. The structure of the status halfword is defined in appendix D.

c. SEND COMMAND. This function outputs a 16-bit command which is defined by the user to the FRG. When this function is selected the user is prompted for the command as follows:

```
ADIAG:  ENTER COMMAND (HALFWORD)
ADIAG>
```

The user then enters the command in a hexadecimal format at the control terminal. The structure of the command is defined in appendix D.

d. SET FRUIT PARAMETERS. This function allows the user to define the fruit environment parameters the ARPG will use to generate fruit replies. When this function is selected the user will be prompted for the reply parameters as follows:

```
ADIAG:
ADIAG:  ENTER ATCRBS FRUIT REPLY PARAMETERS
ADIAG:  FORMAT>XXXX XXXX XXXX XXXX <CR>
ADIAG>
ADIAG:
ADIAG:  ENTER MODE S FRUIT REPLY PARAMETERS
ADIAG:  FORMAT>XXXX XXXX XXXX XXXX <CR>
ADIAG>
```

The user then enters the parameters in hexadecimal format, four words at a time, for ATCRBS and Mode S. Both sets of parameters need to be loaded into the controller. The structure of the parameter block is defined in appendix D.

e. SHOW REPLY PARAMETERS. This function allows the user to read replies from the ARPG. If this function is selected the user is prompted with the following:

```
        ADIAG:
        ADIAG:  ENTER NUMBER OF REPLY PARAMETERS (0 = CONTINUOUS)
    ADIAG>
```

If the user enters 0 or just hits the RETURN key, the program will continuously read replies from the RPG at a high rate and display the following message to terminate the continuous mode:

```
        CONADIAG:
        CONADIAG:  Hit <RETURN> to exit continuous mode.
        CONADIAG:
```

If the user selects any number other than the default, the following prompt appears on the control screen:

```
        ADIAG:
        ADIAG:  DO YOU WANT THE INPUT DISPLAYED (CS/LP/[NO]) ?
    ADIAG>
```

The user then selects where the data is to be sent; CS will cause the replies to be displayed on the response screen, LP will send the output to the printer, and the default NO will cause no action. The amount of data sent is determined by the number chosen in the previous query.

If data is selected to be displayed on the response screen or printed on the line printer, the reply messages will be displayed in the following format:

```
xxxx xxxx xxxx xxxx
```

where xxxx denotes a hexadecimal halfword. For more information on the specific fields within the reply message refer to appendix D.

f. EXIT DIAGNOSTIC. This function returns the user to the FRG Maintenance Menu and resets the FRG to the normal mode of operation with interrupts disarmed.

7.4.2.3 Diagnostic Routine No. 3.

The FRG diagnostic No. 3 is a semiautomated debugging tool used to track down problems on the MRPG. The user has the ability to define any set of fruit parameters and then generate fruit replies for the given rate.

The following diagnostic menu appears on the control menu when this function is selected:

```
ADIAG: *** FRG DIAGNOSTIC #3 ***
ADIAG:  1 - SHOW DEVICE CONTROLLER STATUS
ADIAG:  2 - SHOW FRG INTERFACE STATUS
ADIAG:  3 - SEND COMMAND
ADIAG:  4 - SET FRUIT PARAMETERS
ADIAG:  5 - SHOW REPLY PARAMETERS
ADIAG:  6 - EXIT DIAGNOSTIC
```

As shown on the menu there are six functions available:

a. SHOW DEVICE CONTROLLER STATUS. This function reads the FRG controller status byte and displays it on the control screen as follows:

```
ADIAG:
ADIAG:  STATUS READ FROM DEVICE = xx
```

where xx represents the status byte in hexadecimal format. The structure of the status byte is defined in appendix D.

b. SHOW FRG INTERFACE STATUS. This function reads the FRG interface status halfword and displays it on the control screen as follows:

```
ADIAG:
ADIAG:  STATUS READ FROM FRG INTERFACE = xxxx
```

where xxxx represents the status halfword in hexadecimal format. The structure of the status halfword is defined in appendix D.

c. SEND COMMAND. This function outputs a 16-bit command defined by the user to the FRG. When this function is selected the user is prompted for the command as follows:

```
     ADIAG:  ENTER COMMAND (HALFWORD)
ADIAG>
```

The user then enters the command in a hexadecimal format at the control terminal. The structure of the command is defined in appendix D.

d. SET FRUIT PARAMETERS. This function allows the user to define the fruit environment parameters for which the MRPG will use to generate fruit replies. When this function is selected the user is prompted for the reply parameters as follows:

```
ADIAG:
ADIAG:  ENTER ATCRBS FRUIT REPLY PARAMETERS
ADIAG:  FORMAT>XXXX XXXX XXXX XXXX <CR>
```

```
ADIAG>
     ADIAG:
     ADIAG:  ENTER MODE S FRUIT REPLY PARAMETERS
     ADIAG:  FORMAT>XXXX XXXX XXXX XXXX <CR>
ADIAG>
```

The user then enters the parameters in hexadecimal format, four halfwords at a time, for ATCRBS and Mode S. Both sets of parameters need to be loaded into the controller. The structure of the parameter block is defined in appendix D.

e. SHOW REPLY PARAMETERS. This function allows the user to read replies from the MRPG. If this function is selected the user will be prompted with the following:

```
     ADIAG:
     ADIAG:  ENTER NUMBER OF REPLY PARAMETERS (0 = CONTINUOUS)
ADIAG>
```

If the user enters "0" or just hits the RETURN key, the program will continuously read replies from the RPG at a high rate and display the following message to terminate the continuous mode:

```
CONADIAG:
CONADIAG:  Hit <RETURN> to exit continuous mode.
CONADIAG:
```

If the user selects any number other than the default, the following prompt appears on the control screen:

```
     ADIAG:
     ADIAG:  DO YOU WANT THE INPUT DISPLAYED (CS/LP/[NO]) ?
ADIAG>
```

The user then selects where the data is to be sent; CS will cause the replies to be displayed on the response screen, LP will send the output to the printer, and the default NO will cause no action. The amount of data sent will be determined by the number chosen in the previous query.

If data is selected to be displayed on the response screen or printed on the line printer, the reply messages will be displayed in the following format:

```
XXXX XXXX XXXX XXXX XXXX XXXX XXXX XXXX XXXX XXXX
```

where XXXX denotes a hexadecimal halfword. For more information on the specific fields within the reply message refer to appendix D.

f. EXIT DIAGNOSTIC. This function returns the user to the FRG Maintenance Menu and resets the FRG back to the normal operating mode with interrupts disarmed.

7.4.2.4 Diagnostic Routine No. 4.

The FRG diagnostic No. 4 is a semiautomated debugging tool used to track down problems in the fruit reply generators. This routine is very similar to the "output reply (RF)" option of MRG diagnostic No. 2 discussed in section 7.3.2.2.

When this diagnostic is selected, the user is prompted by the following query:

```
     ADIAG:  ENTER THE NUMBER OF ITERATIONS (0 = CONTINUOUS)
ADIAG>
```

The user then enters a decimal number at the control terminal. This number is used by the diagnostic routine to define the number of times the function will be executed once the required information has been collected. If no value is entered the parameter defaults to 0 which is the continuous mode.

Next the user is prompted by the query:

```
     ADIAG:  SELECT REPLY GENERATOR ([1],2,3,OR 4)
ADIAG>
```

The default response to this query is Reply Generator 1, as indicated by the brackets. The user's response to this prompt determines the Reply Generator that is employed.

The next query requiring a response is:

```
     ADIAG:  SELECT CW STATE(Y OR [N])
ADIAG>
```

This prompt gives the user the option of turning the PAM modulation on continuously.

The next query requiring a response is:

```
     ADIAG:  ATCRBS OR MODE S ([A]/M)?
ADIAG>
```

Depending on the response to this query determines which of the following prompts is displayed on the control screen:

```
ENTER ATCRBS REPLY MESSAGE
FORMAT:> XXXX XXXX XXXX XXXX <CR>
DEFAULT: 0020 0021 0000 FFFF
```

or,

```
ENTER MODE S REPLY MESSAGE (1ST 4 HALFWORDS)
FORMAT:> XXXX XXXX XXXX XXXX <CR>
DEFAULT: 0020 0028 0000 A801
ENTER MODE S REPLY MESSAGE (LAST 6 HALFWORDS)
FORMAT:> XXXX XXXX XXXX XXXX XXXX XXXX <CR>
DEFAULT: 2345 6789 ABCD EFFF 0F0F 00FF
```

In either case, the input received in response to the above queries is then sent to the Reply Generator selected and reply messages are then sent by the Reply Generator.

Selection of the CONTINUOUS mode, as described above, causes the initiation of the sub-task CHGREPLY. This task is resident in memory and is used to change the content of the reply messages being transmitted. Figure 7.4.2.4-1 shows the menu format of options used in this diagnostic under CHGREPLY.

Referring to figure 7.4.2.4-1 there are seven options listed plus the three at the bottom of the menu. The following is a description of each option from this menu:

a. Reply Time. This function allows the user to change the Reply Time field of the current message, which corresponds to the first 20 bits of the Reply Message. The IIII field depicts the integer value of this field and XXXXX is the hexadecimal representation, where the least significant bit represents 62.5 nanoseconds. If the user selects this function the following prompt appears on the control screen:

```
CHGREPLY:  Enter reply time (in 20-bit Hex field: XXXXX)
CHGREPLY>
```

The user then enters the Reply Time desired in hexadecimal format.

b. Mainbeam/Sidelobe. This function allows the user to select mainbeam or sidelobe power field, which corresponds to bit 10 in the second word of the reply (bit 0 is the MSB and bit 15 is the LSB in each word). The X field depicts the current value of the 1-bit field, where a 1 would signify mainbeam and a 0 would signify sidelobe. If the user selects this function the following prompt appears on the control screen:

```
CHGREPLY:  Enter Mainbeam(1)/Sidelobe(0)
CHGREPLY>
```

The user then enters either a 1 or a 0.

```
      CHGREPLY:
      CHGREPLY:  DIAGNOSTICS IN CONTINUOUS MODE
      CHGREPLY:
      CHGREPLY:  Added delay between replies: 1 millisecond(s)
      CHGREPLY:
      CHGREPLY:  CURRENT REPLY MESSAGE:  XXXX XXXX XXXX XXXX
      CHGREPLY:
      CHGREPLY:  1 - Reply Time = IIII (XXXXX, 20-bit Hex field)
      CHGREPLY:  2 - Mainbeam/Sidelobe = X  (1-bit hex field)
      CHGREPLY:  3 - Type = X  (4-bit hex field)
      CHGREPLY:  4 - Power (Attenuation) = II dBm (XX, 6-bit field)
      CHGREPLY:  5 - Left/Right Boresight = X  (1-bit hex field)
      CHGREPLY:  6 - Monopulse setting = XX  (8-bit hex field)
      CHGREPLY:  7 - ATCRBS Code = XXXX  (2-byte Hex field)
      CHGREPLY:
      CHGREPLY:  ('A' to change message; 'D' to change delay)
      CHGREPLY:   Enter no. to change or 'E' to exit
  CHGREPLY>
```

FIGURE 7.4.2.4-1. SAMPLE FORMAT OF CHGREPLY OPTION MENU

c. Type. This function allows the user to change the type field of the current reply message which corresponds to the least significant nibble of the second word. The X field signifies the current reply message type. If the user selects this function the following prompt appears on the control screen:

```
      CHGREPLY:  Enter Type field (1, 2, 4, or 8)
  CHGREPLY>
```

The user then enters one of the four type codes listed below:

1 - Nondiscrete Reply (ATCRBS)
2 - Mode S All-Call Reply
4 - Mode S Surveillance Reply
8 - Mode S Comm-B Reply

d. Power (Attenuation). This function allows the user to change the power attenuation field of the current reply message.

The II field depicts the integer value of this field and XX is the hexadecimal value. The 6-bit power attenuation field, located in the upper byte of the third word, has a range from 0 to 63 dBm. If the user selects this function the following prompt appears on the control screen:

```
CHGREPLY:  Enter Power field (in decimal: 0-63 dBm)
CHGREPLY>
```

The user then enters the desired power attenuation level in decimal format.

e. Left/Right Boresight. This function allows the user to select left or right of boresight field, which corresponds to bit 7 in the third word of the reply. The X field depicts the current value of the 1-bit field, where a 1 would signify left of boresight and a 0 would signify right of boresight. If the user selects this function the following prompt appears on the control screen:

```
CHGREPLY:  Enter Left(1)/Right(0) of Boresight
CHGREPLY>
```

The user then enters either a 1 or a 0.

f. Monopulse Setting - This function allows the user to change the monopulse field of the current reply message. The XX field depicts the 8-bit hexadecimal value of this field, located in the lower byte of the third word. If the user selects this function the following prompt appears on the control screen:

```
CHGREPLY:  Enter Monopulse field (8-bit Hex field: XX)
CHGREPLY>
```

The user then enters the desired monopulse setting in hexadecimal format.

g. ATCRBS Code. This function allows the user to change the ATCRBS code within the reply message. This 2-byte hexadecimal field, depicted by the XXXX, corresponds to the fourth word of the reply. Selection of this function will cause the following prompt to appear on the control screen:

```
CHGREPLY:  Enter ATCRBS Code (2-byte hex field -> XXXX)
CHGREPLY>
```

The user then enters the 2-byte field in hexadecimal format.

h. Mode S Data. This function allows the user to change the Mode S data within the reply message. This 14-byte hexadecimal field, depicted by the seven XXXX fields (not shown), corresponds to the fourth through tenth words of the reply. Selection of this function causes the following prompt to appear on the control screen:

```
CHGREPLY:  Enter Mode S data - words 4-10
CHGREPLY:  XXXX XXXX XXXX XXXX XXXX XXXX XXXX
CHGREPLY>
```

The user then enters the seven 2-byte fields (XXXX) in hexadecimal format.

i. A to Change Message. This function allows the user to change the entire message at once. If this function is selected and the message type corresponds to ATCRBS, then the following prompt appears on the control screen:

```
CHGREPLY:  Enter Reply Message
CHGREPLY:  XXXX XXXX XXXX XXXX
CHGREPLY>
```

The user then enters the four 2-byte fields (XXXX) in hexadecimal format. If this function is selected and the message type corresponds to a Mode S type, then the following prompt appears on the control screen:

```
CHGREPLY:  Enter Reply Message
CHGREPLY:  XXXX XXXX XXXX XXXX XXXX XXXX XXXX XXXX XXXX XXXX
CHGREPLY>
```

The user then enters the ten 2-byte fields (XXXX) in hexadecimal format.

j. D to Change Delay. This function allows the user to change the software delay added between each reply sent out. If the user selects this function then the following prompt appears on the control screen:

```
CHGREPLY:  Enter delay
CHGREPLY>

CHGREPLY:  Enter time unit:
CHGREPLY:  1 - millisecond
CHGREPLY:  2 - second
CHGREPLY:  3 - minute
CHGREPLY>
```

The user first enter the number of units of delay desired followed by the type of unit. If the user enters 0 for the delay then the second prompt is omitted and no delay is added between replies.

k. E to Exit. This function returns the user back to the FRG Maintenance Menu. The test concludes with the following message on the response screen:

```
FRG DIAGNOSTIC #4 COMPLETED
```

At this point, the processing is completed for the FRG diagnostic No. 4 and the FRG Maintenance Menu appears on the control screen.

7.4.3 Data Base Generation Routine.

The Data Base Generation Routine generates the ATCRBS and Mode S reply parameter reference tables used in the ATCRBS RPG and Mode S RPG validation routines (see sections 7.4.1.3 and 7.4.1.4). Execution of this option from the FRG Maintenance Menu will generated two separate reference data tables and store them into the following files: FRGAFRUT.TBL/20 and FRGMFRUT.TBL/20. These two files must exist in order to run the two RPG tests mentioned above. Within each file there are three sets of tables determined by three separate sets of fruit reply parameters, respectively. To generate each table, a set of fruit reply parameters are written to the FRG that has been placed in the validation test mode. These parameters will determine what type of replies are to be generated. If an error occurs in writing the fruit reply parameters to the FRG, one of the following messages will appear on the control screen (depending on which file is being generated):

*** PARAMETER RAM TIMEOUT -- ABORTING ATCRBS FRUIT GENERATION!!

or

*** PARAMETER RAM TIMEOUT -- ABORTING MODE_S FRUIT GENERATION!!

This indicates a possible problem with the FRC in that the read/write flip-flop is not switching to the write mode. The routine will then returns to the FRG Maintenance Menu as well as display a failure message on the response screen.

If no errors occur, the routine will then begin to build a table of replies corresponding to the set of fruit reply parameters. For each set of parameters 100 replies are read from the FRG and written out to the data base file. If an error should occur while reading the data from the FRG one of the following messages will appear on the control screen, depending on which file is being built:

*** INPUT RAM TIMEOUT -- ABORTING ATCRBS FRUIT GENERATION!!

or

*** INPUT RAM TIMEOUT -- ABORTING MODE_S FRUIT GENERATION!!

These messages indicate that there may be problems with the FRC; in this case no data were returned to the input buffer from the controller. Again, the routine will return to the menu as well as display a failure message on the response screen. Depending on the file being generated, the failure messages will be as follows:

*FRG ATCRBS FRUIT GENERATION FAILURE -- FILE DATA IS CORRUPTED,
DO NOT USE!!

or

```
*FRG MODE_S FRUIT GENERATION FAILURE -- FILE DATA IS CORRUPTED,
                                                  DO NOT USE!!
```

If either of these files should become corrupted, their corresponding RPG test cannot be run. These two files must be successfully generated in order for the validation tests to run. The corresponding messages for successful file generations are as follows:

```
FRG ATCRBS FRUIT GENERATION SUCCESSFULLY EXECUTED
FRG MODE_S FRUIT GENERATION SUCCESSFULLY EXECUTED
```

It should be noted that this routine should only be run if the files do not exist or if hardware/firmware modifications warrant new table generation. Caution must be exercised when regenerating new tables and running the two FRG RPG validations (no. 3 and no. 4) since the algorithm used to run the validations is the same used in generating the reference tables. Thus, if the RPG boards are not functioning properly and the tables are regenerated, the data within the tables will be incorrect and the boards will misleadingly pass the validation tests.

7.4.4 Fruit Environment Statistics Routine.

The statistical routine provides the user with a set of graphs and data characterizing the ARIES Fruit Reply Generator hardware. This routine is essentially divided into two parts, ATCRBS or Mode S, which are shown in figure 7.4.4-1. Both ATCRBS and Mode S options will display and/or print resulting information, while the DUMP option will display and/or print only existing data collected under options 1 and/or 2. The ALL option will perform both options 1 and 2, including their outputs.

In each part, ATCRBS and Mode S, the user defines a set of Fruit Reply Parameters either from a field of three options given in the "FRUIT REPLY PARAMETER MENU" or define a unique set of parameters manually. If the latter is chosen, the format for entering the parameters is the following:

```
     ADIAG:
     ADIAG:  XXXX XXXX XXXX XXXX <RETURN>
ADIAG>
```

where each XXXX is a two-byte hexadecimal word. This format applies to both ATCRBS and Mode S fruit reply parameters, where both must be entered in, even though the user may wish to obtain data for only reply type format. These reply parameters are then checked for their validity, where an invalid parameter will be detected if the third word of each set of reply parameters is not with in a set range. The error message that may occur is as follows:

```
ADIAG:
ADIAG:  ILLEGAL ATCRBS (or MODE S) FRUIT RATE SCALING FACTOR DETECTED!
```

```
ADIAG:  FRUIT RATE SCALING FACTOR RANGE IS 0040 TO 4095 HEX.
ADIAG:
ADIAG:  PLEASE RE-ENTER
ADIAG:
```

```
ADIAG:
ADIAG:  ****  FRG STATISTICS  ****
ADIAG:  1  -  ATCRBS
ADIAG:  2  -  MODE_S
ADIAG:  3  -  DUMP
ADIAG:  4  -  EXIT
ADIAG:  0  -  ALL(DEFAULT)
ADIAG>
```

FIGURE 7.4.4-1. FRG STATISTICS MENU SCREEN.

The user then has to reenter the reply parameters. For information on deriving the reply parameter message refer to appendix D.

After the reply parameters are entered the user will be queried for the number of samples to be taken; the permissible range is from 1 to 50,000 samples. The user will also be asked to provide the desired destination of the graphs and the data. They may be printed to the line printer and/or displayed on the response screen. The default output device is the response screen.

Once the reply parameters and number of samples are entered, the CPU sends the reply parameters to the Fruit Reply Controller (FRC) to be set up for generating replies. If an error occurs in writing the reply parameters to the FRC the following message will appear on the response screen:

PARAMETER BUFFER WRITE MODE TIMEOUT OCCURRED.

This indicates a possible problem with the FRC in that the read/write flip-flop is not switching to the write mode. The routine will also display a failure message on the response screen and return the current level menu. If no error occurs, the FRC will begin generating replies until the specified number of samples are taken. The following message on the response screen will indicated that there has been an error in generating a reply:

INPUT BUFFER READ MODE TIMEOUT OCCURRED.

This indicates that there may be problems with the FRC; in this case no data were returned to the input buffer from the controller. Again, a failure message will

be displayed on the response screen and control will return to the user back at the current level menu. If no errors are detected in generating the replies, the routine will proceed to analyze the data.

Data analysis consists of taking each of the reply messages and extracting the pertinent information. For ATCRBS reply blocks this consists of the entire four word message; Mode S information is extracted from the first four words of the ten word message. The information extracted from the replies is then averaged to give the following probabilities on the number of replies sampled:

ATCRBS	Mode S
Mainbeam/Sidelobe	Mainbeam/Sidelobe
Left/Right of Boresight	Left/Right of Boresight
Fixed Code	Long/Short Replies
Fruit Rate	Fruit Rate

When displayed (or printed) these values are accompanied with expected values determined from the Fruit Reply Parameters.

There are also graphs plotted of the Monopulse Probability Curve, Mainbeam Power Probability Curve, and Sidelobe Power Probability Curve. The monopulse curve graph plots the probability of the monopulse field of the reply message being any one of the 64 different values in groups of four. Actual counts for each of these groups of four are on the following page. The mainbeam and sidelobe power curves are relatively the same, each displays a plot of the probability of a reply being at a particular attenuation level. Each attenuation level is spaced by 1 dBm increments. The actual count for each attenuation level is on the page following the graph.

At the completion of each part, ATCRBS and Mode S, a statement of completion message will appear on the response screen as shown below.

FRG STATISTICS: ATCRBS (or MODE_S) ROUTINE SUCCESSFULLY EXECUTED

Control will then return to the current level menu, the FRG STATISTICS menu. Sample outputs of data and graphs can be found in appendix B.

7.5 UNIVERSAL INTERVAL TIMER.

The device menu for the Universal Interval Timer (UIT) logic is shown on figure 7.5-1 as it appears on the control screen. Access to this menu is through option 8 of the ARIES Maintenance Menu (refer to figure 4-2).

Referring to figure 7.5-1 there are five options available on the UIT Maintenance Menu:

a. To run the UIT Validation Test Routine.

b. To run the UIT Validation Data Dump Routine.

c. To access the UIT help text file.

d. To return to the System Maintenance Menu.

e. To access diagnostic routine No. 1 function menu.

```
        ADIAG:
        ADIAG:  ***********************************
        ADIAG:  ****   UIT MAINTENANCE MENU   ****
        ADIAG:  ***********************************
        ADIAG:  1 - VALIDATION
        ADIAG:  2 - DUMP
        ADIAG:  3 - HELP
        ADIAG:  4 - EXIT
        ADIAG:  5 - DIAG #1
    ADIAG>
```

FIGURE 7.5-1. UIT OPTION SCREEN

There is no validation test selection menu for the UIT since there is only one test routine. When the validation option is selected, the UIT Static Load and Read Test is immediately run. Likewise, there is no data dump selection menu for the UIT for the same reason. When the dump option is selected, the UIT data dump is immediately run. These routines are discussed in section 7.5.1.

When option 3 is selected, the UIT help text file appears on the response screen. This help text file provides a brief description on all of the routines accessible under the UIT Maintenance Menu. Refer to appendix C for the listing of the UIT Help Text File.

When option 4 is selected, the user is returned to the System Maintenance Menu. When option 5 is selected, program control is moved to the diagnostic No. 1 function menu. The functions available on this menu are discussed in section 7.5.2.

7.5.1 Validation Test and Data Dump Routines.

The UIT is a programmable timer which is used by the ARIES to provide pulses timed with respect to All-Call interrogations to the CPU. Refer to ARIES Principles of Operation concerning detailed description of the UIT hardware.

When the VALIDATION option on the UIT Maintenance Menu is selected, the UIT Static Load and Read Test is executed. This test along with its associated data dump is discussed in section 7.5.1.1.

The UIT is checked by other validation tests as well. When running the MRG Memory Buffer Swap Test and the MRG Primary/Secondary Reply Counter Swap Test, the UIT is

used to pulse the MRG to change the primary/secondary designations of Memory Buffer No. 1 and Memory Buffer No. 2 and Reply Counter No. 1 and Reply Counter No. 2. When running the MIT Interrupt Timing Tests, the UIT is checked to verify that the Uplink Receiver can start the UIT, and that the UIT can start the Missing Interrogation Timer.

7.5.1.1 Static Load and Read Test.

The Static Load and Read Test verifies the full 16-bit data bus between the CPU and UIT plus the internal data paths of the UIT. Before describing how this is accomplished, a general layout of the internal data paths of the UIT is depicted in figure 7.5.1.1-1 as a point of reference for the following discussion.

The UIT is verified by loading known data in the input buffer, transferring the data from the input buffer to the counter, then reading both through the output multiplexer buffer. The first data sent to the UIT is zero with the following successive values incremented by (HEX) 303 providing a through mix of data patterns. The test data is incremented until it reaches its maximum value (HEX FFFF).

The pass criteria for this test is the successful comparison of the data read from the UIT input and output buffers with the data sent to the UIT. If such a comparison should fail, the test is declared a failure. The result of the test is written to the Summary Log.

The data dump file generated by this test is formatted as shown below:

```
DATA INBUF OUTBUF ERROR FLAGS  DATA  INBUF OUTBUF ERROR FLAGS  ' ' '



  0     0     0              ! 5757   5757   5757            ! ' ' '
303   303   303              ! 5A5A   5A5A   5A5A            ! ' ' '
606   606   606              ! 5D5D   5D5D   5D5D            ! ' ' '
909   909   909              ! 6060   6060   6060            ! ' ' '
C0C   C0C   C0C              ! 6363   6363   6363            ! ' ' '
 '     '     '               !  '      '      '              ! ' ' '
 '     '     '               !  '      '      '              ! ' ' '
 '     '     '               !  '      '      '              ! ' ' '
```

The first line contains the labels that identify the data located in the columns beneath them. The reference data (DATA), the data read from the input buffer (INBUF) and the data read from the output buffer (OUTBUF), are listed side by side. An error flag (** ERROR **) is added in the "ERROR FLAG" column along side of the data if the test data read should not match the reference data. This layout is repeated three times when it is printed as shown above. This layout occurs once when the data dump file is displayed.

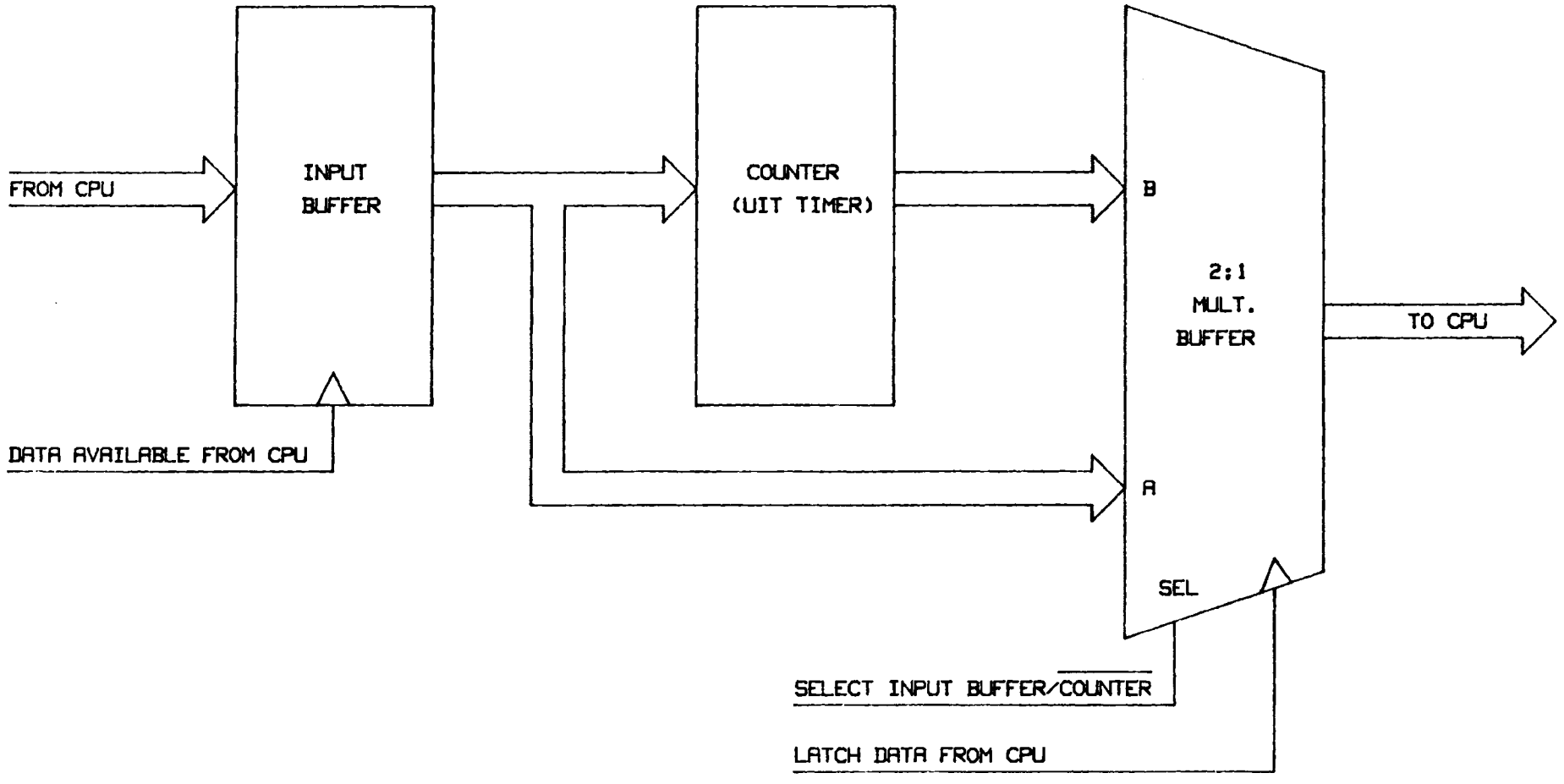

FIGURE 7.5.1.1-1. UIT BLOCK DIAGRAM

7.5.2 Diagnostic Routine No. 1.

The diagnostic routine No. 1 for the UIT gives the user total control in programming the UIT logic. When the routine is selected the following message appears on the control screen and prompts the user for a response:

```
ADIAG:
ADIAG:  ENTER ITERATING COUNT (0=CONTINUOUS)
ADIAG>
```

The user then enters a decimal number at the control terminal. This number is a parameter used by the diagnostic routine to define the number of times any function will be executed when selected. If no value is entered the parameter defaults to 0 which is the continuous mode. After the number is entered the RETURN key is pressed. Then the UIT diagnostic No. 1 menu appears on the control screen as shown below:

```
ADIAG:
ADIAG:  ***  UIT DIAGNOSTIC  ***
ADIAG:  1 - OUTPUT COMMAND
ADIAG:  2 - OUTPUT DATA
ADIAG:  3 - INPUT DATA
ADIAG:  4 - SHOW INTERRUPT COUNTER
ADIAG:  5 - CLEAR INTERRUPT COUNTER
ADIAG:  6 - EXIT DIAGNOSTIC
ADIAG:
ADIAG:  ENTER FUNCTION
ADIAG>
```

From the control terminal the user can select a function by typing the number preceding the function shown on the menu and then pressing the RETURN key. These functions are:

a. OUTPUT COMMAND. This function outputs a 16-bit command, defined by the user, to the UIT. When this function is selected a list of commands appears on the control screen as a quick reference for the user. This list is shown below as it appears on the control screen.

```
ADIAG:
ADIAG:  A8 - RESET COUNTER/DISABLE INTERRUPTS
ADIAG:  30 - LOAD COUNTER
ADIAG:  24 - READ INPUT BUFFER
ADIAG:  25 - READ INPUT BUFFER WHILE COUNTER IS RUNNING
ADIAG:  26 - READ COUNTER
ADIAG:  27 - READ COUNTER WHILE IT'S RUNNING
ADIAG:  51 - RUN WITH INTERRUPTS DISABLED
ADIAG:  84 - STOP ON OVERFLOW
```

```
        ADIAG:  71 - SINGLE STEP
        ADIAG:
        ADIAG:  ENTER COMMAND
    ADIAG>
```

The user then enters the command in hexidecimal format at the control terminal and presses the RETURN key. The command does not have to be from the command list. The structure of the command is defined in appendix D.

b. OUTPUT DATA. This function outputs a 16-bit data word, defined by the user, to the UIT input buffer. When this function is selected the user is prompted for the data as follows:

```
        ADIAG:  ENTER DATA
    ADIAG>
```

The user then enters the data in hexidecimal format at the control terminal and presses the RETURN key. The data entered can have any value.

c. INPUT DATA. This function reads a 16-bit halfword from the UIT. The data origin is controlled by the command issued to the UIT. The data read is either from the Input Buffer or the Counter. When this function is selected the following prompt appears on the control screen:

```
        ADIAG:  DO YOU WANT DATA DISPLAYED ON TERMINAL?(Y/N)
    ADIAG
```

If the user enters a Y, data is displayed on the control screen as follows:

```
        ADIAG:  INPUT DATA = xxxx
```

where xxxx is a hexidecimal value.

If the user does not want data displayed, an N is entered followed by pressing the RETURN key. Generally this is done to increase the rate the data is read from the UIT when using a oscilloscope for debugging purposes.

d. SHOW INTERRUPT COUNT. This function reads the memory location which holds the number of times the UIT ISR was called and displays the count on the control screen as follows:

```
        ADIAG:
        ADIAG:  INTERRUPT COUNT = xxxx
```

where xxxx represents the number of interrupts serviced.

e. CLEAR INTERRUPT COUNT. This function clears the memory location which holds the number of times the UIT ISR was called and then executes the SHOW INTERRUPT COUNT function.

f. EXIT DIAGNOSTIC. This function returns the user to the UIT Maintenance Menu and leaves the UIT logic in its current state. That is, if the UIT is placed in a particular diagnostic mode it will remain in that mode after the user returns to the device menu.

7.6 RADAR REPORT GENERATOR.

The device menu for the Radar Report Generator (RRG) board is shown in figure 7.6-1 as it appears on the control screen. Access to this menu is through option 9 of the ARIES Maintenance Menu (refer to figure 4-2).

```
        ADIAG:
        ADIAG:  ***********************************
        ADIAG:  ****   RRG MAINTENANCE MENU   ****
        ADIAG:  ***********************************
        ADIAG:  1 - VALIDATION
        ADIAG:  2 - DUMP
        ADIAG:  3 - HELP
        ADIAG:  4 - EXIT
        ADIAG:  5 - DIAG #1
        ADIAG:  6 - DIAG #2
    ADIAG>
```

FIGURE 7.6-1. RRG OPTION SCREEN

Referring to figure 7.6-1 there are six options available on the RRG Maintenance Menu:

a. To access the RRG Board Validation Test Menu.

b. To access the RRG Board Validation Data Dump Menu.

c. To access the RRG help text file.

d. To return to the System Maintenance Menu.

e. To access diagnostic routine No. 1 function menu.

f. To access diagnostic routine No. 2 function menu.

Selecting options 1 or 2 moves the user to a third level menu, the Validation Test Menu or the Validation Data Dump Menu, respectively. From the Validation Test

Menu, the user can run tests separately or as a set. Similarly, from the Validation Dump Menu, the user can run data dumps separately or as a set. The routines available on these menus are discussed in section 7.6.1.

Selecting option 3, the RRG help text file is accessed and displayed on the response screen. The RRG help text file provides a brief description on all of the routines accessible under the RRG Maintenance Menu (refer to appendix C for the listing of the RRG help text file).

Selecting option 4, the user is returned to the System Maintenance Menu.

Selecting options 5 or 6 moves the user to a function menu, the diagnostic No. 1 menu or the diagnostic No. 2 menu, respectively. The functions available on these menus are discussed in section 7.6.2.

7.6.1 Validation Test and Data Dump Routines.

Access to the RRG board validation tests is through the VALIDATION option on the RRG Maintenance Menu. When VALIDATION is selected, the RRG Validation Menu appears on the control screen as shown in figure 7.6.1-1.

```
      ADIAG:
      ADIAG:  ***  RRG VALIDATION  ***
      ADIAG:  1 - MEMORY BUFFER TEST
      ADIAG:  2 - MESSAGE COUNTER LOGIC TEST
      ADIAG:  3 - MICROPROCESSOR LOOPBACK TEST
      ADIAG:  4 - ADCCP DATA CONVERTER LOOPBACK TEST
      ADIAG:  5 - EXIT
      ADIAG:  6 - ALL (DEFAULT)
ADIAG>
```

FIGURE 7.6.1-1. RRG VALIDATION TEST MENU SCREEN

Referring to figure 7.6.1-1 there are four validation tests for the RRG board:

a. Memory Buffer Test.

b. Message Counter Logic Test.

c. Microprocessor Loopback Test.

d. ADCCP Data Converter Loopback Test.

As shown in figure 7.6.1-2, the RRG is divided into three major hardware modules: the RRG interface, the RRG controller, a bit-slice microprocessor, and the Advanced Data Communication Control Procedure (ADCCP) Data Converter (ADC). The first two validation tests check the RRG interface logic. The third test extends

the check to include the RRG controller, the data and command buses tying the interface and controller together, plus additional interface logic not checked by the first two tests. The forth test extends the check to include the ADC and the three buses tying it with the other two hardware modules. These tests, along with their associated data dumps, are discussed in sections 7.6.1.1 through 7.6.1.4.

7.6.1.1 Memory Buffer Test.

The Memory Buffer Test verifies the RRG input memory buffer along with the device data bus, memory address counters, and control lines. This is accomplished by loading data into the memory buffer and reading it back for comparison. First, the buffer is loaded with all 0000's then the contents of the buffer is read back for comparison. The sequence is repeated with 5555, AAAA, and FFFF. Finally, a fifth sequence is run where the address for each location in memory is loaded into that memory location, then the contents of the buffer is read back for comparison. The fifth sequence primarily checks the operation of the Buffer Write Address Counter and the Buffer Read Address Counter over the full memory buffer.

The pass criteria for this test is the successful comparison of the data read from the memory with what was written to the memory. If any of the comparisons should not match the test is declared a failure. The result of the test is written on the Summary Log.

The data dump file generated by this routine is formatted as shown below:

MEMORY BUFFER VALIDATION - 0000 HEX

	0	1	2	3	4	'''	9	A	B	C	D	E	F
0	0	0	0	0	0	'''	0	0	0	0	0	0	0
1	0	0	0	0	0	'''	0	0	0	0	0	0	0
'	'	'	'	'	'	'''	'	'	'	'	'	'	'
'	'	'	'	'	'	'''	'	'	'	'	'	'	'
'	'	'	'	'	'	'''	'	'	'	'	'	'	'
3F	0	0	0	0	0	'''	0	0	0	0	0	0	0

The first line identifies the test followed by the expected result, i.e., " - 0000 HEX ". On the line directly below it is a series of numbers 0 to F that represent the four least significant bits of the memory buffer address. Below these two lines the remaining upper six address bits are listed 0 to 3F making up the first column. This essentially maps out all of the data locations of the buffer. Refer to appendix B for a complete listing of this file.

7.6.1.2 Message Counter Logic Test.

The Message Counter Logic is used to keep track of the number of radar report messages in the memory buffer pending dissemination. During normal operations the CPU loads the message counter with the number equal to the number of radar report messages loaded into the memory buffer. The microcontroller then fetches a radar report message form the memory buffer and decrements the message counter. The radar report message is subsequently disseminated and the microcontroller attempts to fetch another message. When the Message Counter is 0, the memory buffer is empty.

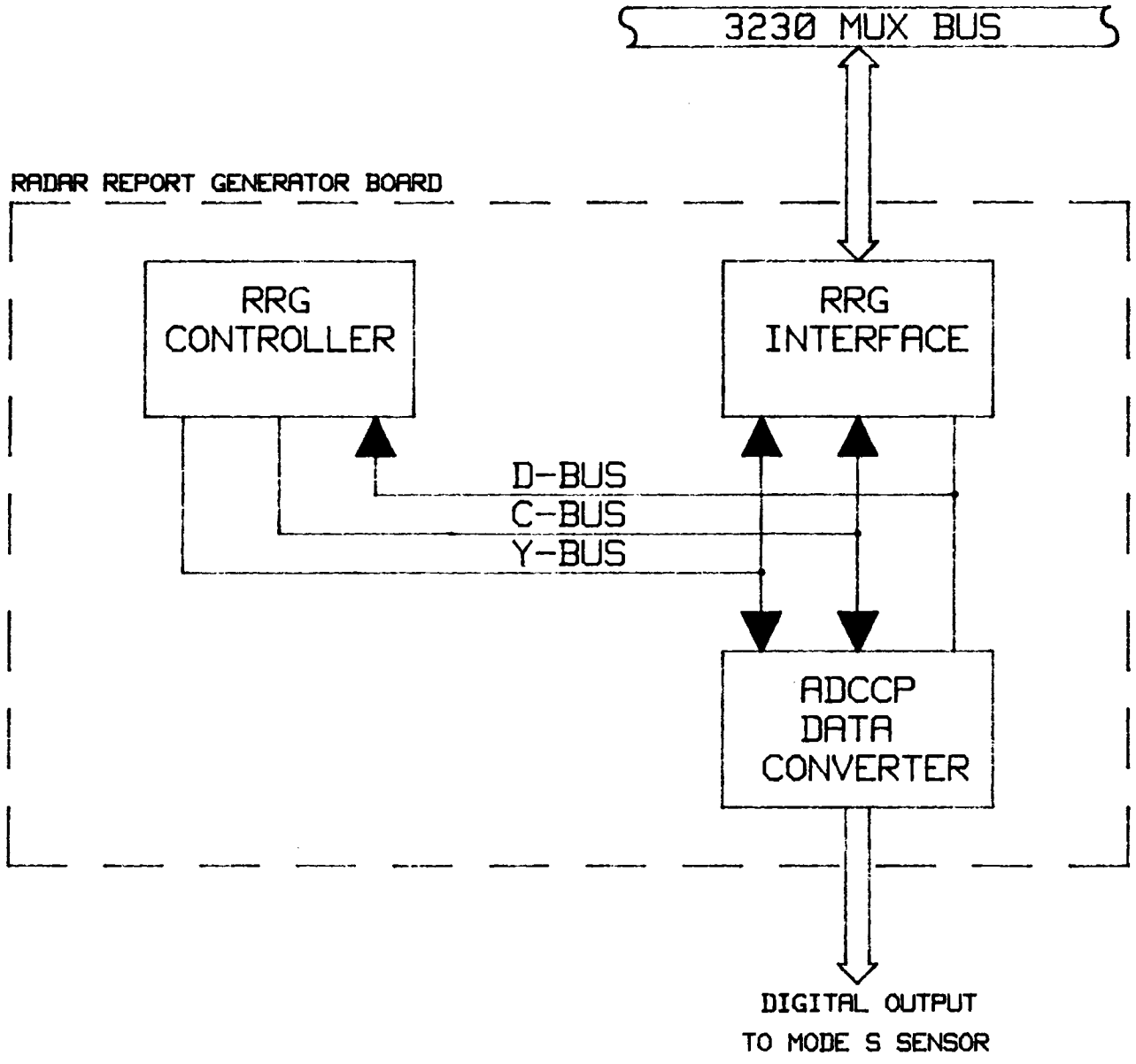

FIGURE 7.6.1-2. RRG DIGITAL CONFIGURATION

The Message Counter Logic Test checks the RRG message counter logic. The test verifies first that the message counter can be loaded, second that a number can be added to the value already in the counter, and third that the counter can be decremented. This is accomplished in three parts: first by setting the counter to 0 then loading a sequence of four known values (0, 85, 170 and 255) into the counter. After each load the counter is read and then reset before the next load. Second, loading a set of four known values (15, 15, 18 and 207) into the counter. After each load the counter is read but is not reset before the next load. At this point the counter should contain the value 255. Third, the counter is decremented 255 times and read each time.

The pass criteria for this test is the successful comparison of the values read from the Message Counter with expected values stored on a reference table. The result of the test is written in the Summary Log.

The data dump file generated by this test is formatted as shown below:

MESSAGE COUNTER LOAD TEST

DATA	REF
0	0
85	85
170	170
255	255
15	15
30	30
48	48
255	255

MESSAGE COUNTER DECREMENTATION FROM 255 - 0

255	223	191	159	127	95	63	31
254	222	190	158	126	94	62	30
.	.	.	.	.	.	.	.
.	.	.	.	.	.	.	.
.	.	.	.	.	.	.	.

The first part of the file consists of the data read back from the Message Counter (DATA) along with the expected values (REF) for the first two parts of the test. The second part of the file shows the output of the Message Counter decremented 255 times for the third part of the test. Refer to appendix B for a complete listing of this file.

7.6.1.3 Microprocessor Loopback Test.

The Memory Buffer Test and the Message Counter Test are prerequisites for the successful operation of this test. The hardware functions checked by these tests are used in supporting the microcontroller checkout. Therefore, both of these tests must be successful in order for the Microprocessor Loopback Test to be successful.

The Microprocessor Loopback Test verifies the operational status of the RRG's bit-slice microcontroller and its supporting input and output data buses and

command bus. This is accomplished by placing the controller in its loopback diagnostic mode. In this mode the controller essentially reads four word messages from the Memory Buffer and loads them in an output RAM to be read by the CPU. The controller monitors the Message Counter to determine if data is available in the Memory Buffer. If the Message Counter contains a value greater than 0, the controller reads four words from the Memory Buffer and decrements the Message Counter by one. The controller loads the four words into the output RAM and then tests the Message Counter for additional data. The data loaded in the output RAM is read by the CPU for evaluation.

The pass criteria for this test is the successful comparison of the data written into the Memory Buffer with the data read from the output RAM. The controller loopback diagnostic supports the unformatted message structure allowing any bit pattern to be tested. All together, 64 four word unformatted messages are loaded into the Memory Buffer. If any of the comparisons should not match the test is declared a failure. The result of the test is written in the Summary Log.

There are two other checks for possible failure conditions. One failure condition is when no data is available to be read by the CPU and the other is that more data is available then was loaded in the Memory Buffer. The first failure condition is generated when the read/write mode flip-flop of the output RAM remains in the write mode longer then 1 millisecond after the CPU loaded data into the Memory Buffer. The second failure condition is generated when the read/write mode flip-flop of the output RAM remains in the read mode after the expected amount of data from the output RAM were read. The test is declared a failure even if the test data/reference data comparison is successful when this error is detected.

The data dump file generated by this routine is formatted as shown below:

DATA	REF	DATA	REF
123	123	3456	3456
4567	4567	89AB	89AB
89AB	89AB	CDEF	CDEF
.	.	.	.
.	.	.	.
.	.	.	.

The first line identifies the test data (DATA) which was read from the RRG and the reference data (REF) which was loaded by the CPU. All 64 four word unformatted messages sent to the RRG and the data read back is recorded and displayed side-by-side. If the test data does not match the reference data, an error flag (***) is added between the two columns to highlight the errors. Refer to appendix B for a complete listing of this file.

If the software timeout occurred because no data were available from the RRG the error message "DATA RAM NOT AVAILABLE" is written on the dump file.

If the read/write mode of the output RAM was tested to be in the read mode after all of the expected data were read, the error message DATA RAM STILL AVAILABLE is written on the dump file after the test data and reference data is recorded.

7.6.1.4 ADCCP Data Converter Loopback Test.

The first three validation tests discussed in sections 7.6.1.1 through 7.6.1.3 are prerequisites for this test. The hardware functions checked by these tests are used in supporting the ADC checkout. Therefore, all three of these tests must be successful in order for the ADCCP Data Convertor Loopback Test to be successful.

The ADC Loopback Test checks the third major hardware module of the RRG. This is accomplished by placing the controller in its ADC diagnostic support routine and loading a predefined set of messages in the Air Surveillance Radar (ASR) 9 format (refer to appendix D) into the memory buffer. In this diagnostic mode, the controller initially reads four words from the memory buffer after determining that the message counter is not set at 0. Then the controller checks the header, first word read, for message type (status or report). If the message is a report, three additional words are read from the memory buffer. The message counter is decremented and the ADCCP command and address frames are prefixed to the message before it is sent to the ADC. Then the controller sends a start dissemination to the ADC and waits for a disseminated message to return.

When the ADC receives the "start dissemination" from the controller, it begins disseminating the message after the next complete flag sequence. During dissemination, the message frame check sequence is generated and appended at the end of the message. At the same time, zero bit insertion logic prevents six consecutive 1 bits from occurring randomly within the message during dissemination.

Independent ADC loopback diagnostic logic receives the disseminated message, extracting the inserted zeros, and assembling it into a First-In First-Out (FIFO) memory buffer. At the same time the frame check sequence (FCS) is checked and if found in error, a FCS hardware error flag is set. After the complete message is received, the ADC diagnostic support logic sets the message available flag to the controller.

The controller monitors the message available flag to determine when a disseminated message can be read. The message is then transferred from the ADC output buffer into the output RAM. Then the controller checks the FIFO FULL and the FIFO EMPTY error flags of the ADC output buffer. The output RAM read/write mode flip-flop is set to its read mode.

The pass criteria for this test is the successful recording of 12 disseminated messages generated from 12 reports loaded in the memory buffer. The test checks for the proper command and address frames added in front of the report and the correct generation of the frame check sequence at the end of the report. Also, the information within the report is verified. The test verifies that both status and target reports are correctly being disseminated using the ADCCP protocal. The result of the test is written in the Summary Log.

The data dump file generated by this routine is formatted as shown below:

	CMD/ADDR	HDR	W2	W3	W4	W5	W6	W7	FCS	ERROR FLAGS FIFO	MSG	FCS
MESSAGE# 1	FF40	F1B0	123	4567	89AB	CDEF	1234	5678	B3DC			
ERRORS												
REF DATA	FF40	F1B0	123	4567	89AB	CDEF	1234	5678	B3DC			

```
MESSAGE# 2  FF40 F1B0 9ABC DEF0 2345 6789 ABCD EF01 84ED
ERRORS
REF DATA    FF40 F1B0 9ABC DEF0 2345 6789 ABCD EF01 84ED
 '   '       '    '    '    '    '    '    '    '    '
 '   '       '    '    '    '    '    '    '    '    '
 '   '       '    '    '    '    '    '    '    '    '
```

The first line defines particular sections of the messages, such as, the command/address frames (CMD/ADDR), the report header (HDR), report data (W2 through W7) and the frame check sequence (FCS). The header identifies the report type. Below the first line the 12 disseminated messages recorded (MESSAGE#) and the expected message (REF DATA) information are listed. If the test data does not match the reference data, an error flag (****) is inserted between the mismatches to highlight the failure. Refer to appendix B for a complete listing of this file.

Also three additional checks are performed with each message dissemination which are listed to the right. The first check labelled FIFO is performed by the controller each time a disseminated message is read from the ADC diagnostic logic. If the FIFO contains more data after the complete message was read the FIFO error flag (*) is set. The second check labelled MSG, is checked by the controller as well. This error is set when the report type is undefined or illegal. The third check labelled FCS is performed by the ADC diagnostic logic. In this case the disseminated frame check sequence is verified independently by hardware and the result of the check sampled.

If no message is received by the CPU within 4 milliseconds from the time the report was sent to the RRG, a software timeout occurs. The pattern BBBB is written into the test dump file in place of the missing message (as depicted below) then the next report is sent to the RRG:

```
MESSAGE# 1  BBBB BBBB BBBB BBBB BBBB BBBB BBBB BBBB BBBB
ERRORS      **** **** **** **** **** **** **** **** ****
REF DAT     FF40 F1B0  123 4567 89AB CDEF 1234 5678 B3DC
```

Also, the error message DATA RAM NOT AVAILABLE is written on the dump file after all of the test data have been recorded.

7.6.2 Diagnostic Routines.

There are two diagnostic routines available for debugging the RRG board. They are referred to as DIAG #1 and DIAG #2. When either routine is selected, a function menu unique to that routine appears on the control screen. The functions available on these menus are discussed in sections 7.6.2.1 and 7.6.2.2.

7.6.2.1 Diagnostic Routine No. 1.

The diagnostic routine No. 1 for the RRG gives the user total control in programming the RRG board. When the routine is selected the following message appears on the control screen and prompts the user for a response:

```
ADIAG:
ADIAG:  ENTER ITERATING COUNT (0=CONTINUOUS)
ADIAG>
```

The user then enters a decimal number at the control terminal. This number is a parameter used by the diagnostic routine to define the number of times any function will be executed when selected. If no value is entered the parameter defaults to 0 which is the continuous mode. After the number is entered the RETURN key is pressed. Then the RRG diagnostic No. 1 menu appears on the control screen as shown below:

```
ADIAG:
ADIAG:  ***  RRG DIAGNOSTIC #1  ***
ADIAG:  1 - OUTPUT COMMAND
ADIAG:  2 - OUTPUT DATA
ADIAG:  3 - INPUT DATA
ADIAG:  4 - SHOW INTERRUPT COUNTER
ADIAG:  5 - CLEAR INTERRUPT COUNTER
ADIAG:  6 - STATUS
ADIAG:  7 - EXIT DIAGNOSTIC
ADIAG:
ADIAG:  ENTER FUNCTION
ADIAG>
```

From the control terminal the user can select a function by typing the number preceding the function shown on the menu and then pressing the RETURN key. These functions are:

a. OUTPUT COMMAND. This function outputs a 16-bit command, defined by the user, to the RRG. When this function is selected the user is prompted for the command as follows:

```
ADIAG:  ENTER COMMAND
ADIAG>
```

The user then enters the command in a hexidecimal format at the control terminal and presses the RETURN key. The structure of the command is defined in appendix D.

b. OUTPUT DATA. This function outputs a 16-bit data word, defined by the user, to the RRG. When this function is selected the user is prompted for the data as follows:

```
ADIAG:  ENTER DATA
ADIAG>
```

The user then enters the data in hexidecimal format at the control terminal and presses the RETURN key. The data entered can have any value. It is loaded into

either the Input Data Buffer or the Message Counter as directed by a previously issued command. Usually, the data is in the form of radar report messages or the hexidecimal count of the number of messages loaded. The format of the radar report messages is defined in appendix D.

c. INPUT DATA. This function reads a 16-bit halfword from the RRG. The data origin is controlled by the command issued to the RRG. The data read is either from the Input Memory Buffer, the Message Counter (which is only a byte), or the microprocessor return data buffer. When this function is selected the following prompt appears on the control screen:

```
ADIAG:  DO YOU WANT DATA DISPLAYED ON TERMINAL?(Y/N)
```

If the user enters a Y, data is displayed on the control screen as follows:

```
ADIAG:  INPUT DATA = xxxx
```

where xxxx is a hexidecimal value.

If the user does not want data displayed, an N is entered followed by pressing the RETURN key. Generally this is done to increase the rate the data is read from the RRG when using a oscilloscope for debugging purposes.

d. SHOW INTERRUPT COUNT. This function reads the memory location which holds the number of times the RRG ISR was called and displays the count on the control screen as follows:

```
ADIAG:
ADIAG:  INTERRUPT COUNT = xxxx
```

where xxxx represents the number of interrupts serviced.

e. CLEAR INTERRUPT COUNT. This function clears the memory location which holds the number of times the RRG ISR was called and then executes the SHOW INTERRUPT COUNT function.

f. STATUS. This function reads the RRG device status byte and displays it on the control screen as follows:

```
ADIAG:
ADIAG:  DEVICE STATUS = xx
```

where xx represents the status byte in hexidecimal format. The structure of the status byte is defined in appendix D.

g. EXIT DIAGNOSTIC. This function returns the user to the RRG Maintenance Menu and leaves the RRG board in its current state. That is, if the RRG is placed

in a particular diagnostic mode it will remain in that mode after the user returns to the device menu.

7.6.2.2 Diagnostic Routine No. 2.

Diagnostic No. 2 for the RRG is a semiautomated debug tool used primarily in tracking down problems in the ADCCP Data Converter logic. When this routine is selected, the controller is placed in a special diagnostic referred to as the ADC Debug routine (refer to ARIES Hardware Principles of Operation Manual) which supports the following diagnostic menu that appears on the control screen:

```
ADIAG: ***  RRG DIAGNOSTIC #2  ***
ADIAG:  1 - OUTPUT STATUS REPORTS
ADIAG:  2 - OUTPUT RADAR REPORTS
ADIAG:  3 - OUTPUT MIXED REPORTS
ADIAG:  4 - EXIT DIAGNOSTIC
ADIAG:
ADIAG:  ENTER FUNCTION
ADIAG>
```

As shown on the menu there are four functions available:

a. OUTPUT STATUS REPORTS. This function sends a command to the controller to continuously load a canned status message into the ADC. Each time the ADC receives a status report it disseminates the report in the proper ADCCP format (refer to ANSI x3.66. Advanced Data Communication Control Procedure - January, 1979). The canned status report is shown below:

```
! HEADER! WORD 2! WORD 3! WORD 4!
!F 0 C 0!0 A A A!0 C C C!0 F 0 F!
```

Figure 7.6.2.2-1 shows the dissemination of the status report as it would be recorded by a logic analyzer. The first channel is the transmit clock SAMPLE SEND DATA, the second channel is the transmit data stream SEND DATA (refer to ARIES RRG schematic 17). The third channel is the ADC control clock which skips one clock period at the time a 0 bit is inserted in the data stream (refer to ARIES RRG schematic 17). The forth channel is the RUN/IDLE control signal. A message is being disseminated when this signal is high (refer to ARIES RRG schematic 15). Note the bit dissemination order in figure 7.6.2.2-1.

b. OUTPUT RADAR REPORTS. This function sends a command to the controller to continually output a target report to the ADC. The report is disseminated using the ADCCP format by the ADC. The canned target report is shown below:

```
! HEADER! WORD 2! WORD 3! WORD 4! WORD 5! WORD 6! WORD 7!
!F 1 B 0!0 8 0 0!0 x x x!0 B 3 8!0 B 3 8!0 B 3 8!0 B 3 8!
```

The lower 12 bits of word 3 is incremented by one each time a target report is sent to the ADC.

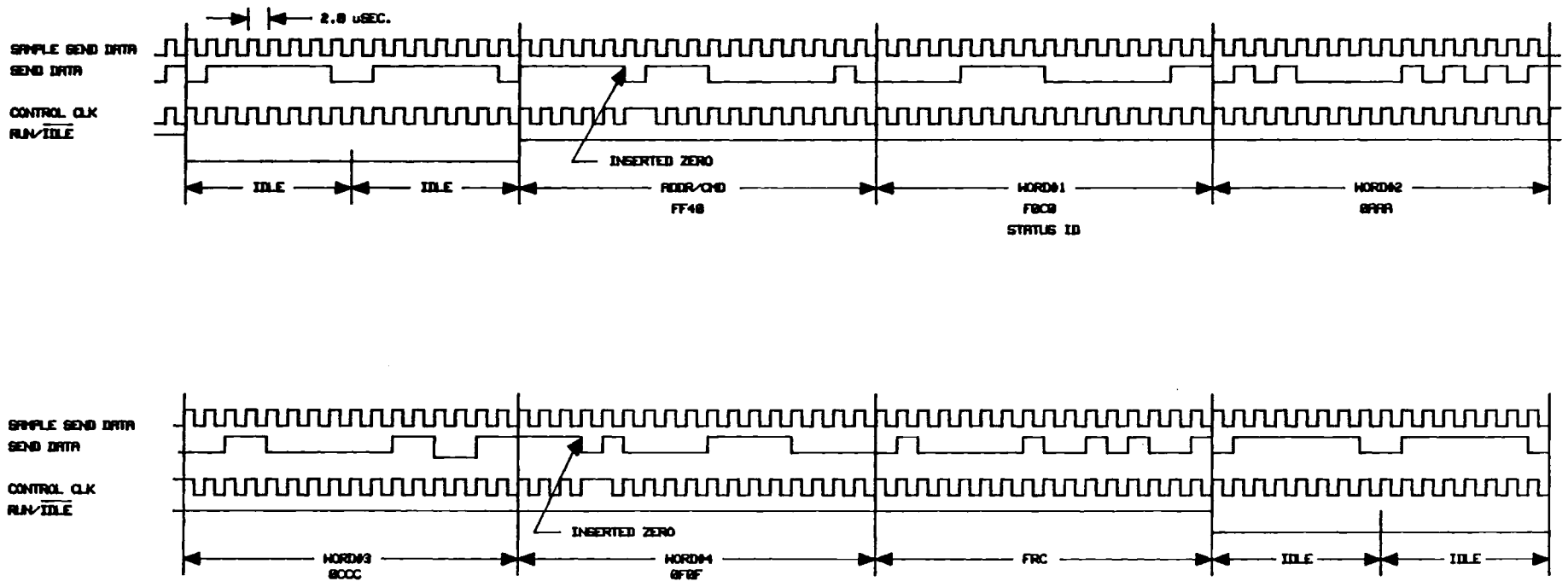

FIGURE 7.6.2.2-1. RRG DISSEMINATED STATUS REPORT

c. OUTPUT MIXED REPORTS. This function sends a command to the controller to output both target reports and status reports to the ADC at a 10:1 ratio. These reports are the same as those generated by the first two functions.

d. EXIT. This function returns the user to the RRG Maintenance Menu.

If one of the first three functions is selected a message appears on the control screen confirming the selection followed by the reappearance of the function menu. For example, if function 2 is selected the following message would appear on the screen:

```
ADIAG:
ADIAG:  ADC RADAR REPORT GENERATION SELECTED
```

7.7 TIME-OF-YEAR RECEIVER.

The Time-of-Year Receiver (TOY) board operationally receives a set of three halfwords of TOY data from an external time source and loads that data into a common area of memory for use by other ARIES operating and maintenance routines. There are a total of four validation routines and one standard diagnostic routine described below.

```
ADIAG:  ********************************
ADIAG:  ****   TOY MAINTENANCE MENU   ****
ADIAG:  ********************************
ADIAG:  1 - VALIDATION
ADIAG:  2 - DUMP
ADIAG:  3 - HELP
ADIAG:  4 - EXIT
ADIAG:  5 - DIAG #1
ADIAG>
```

7.7.1 Validation Test and Data Dump Routines.

There are four validation routines that test the TOY board:

a. Channel-A Static Test

b. Channel-B Static Test

c. Channel-A Dynamic Test

d. Channel-B Dynamic Test

The first two tests are identical except for running on different channels on the TOY board, channel A and channel B. This also applies to the latter two tests. Although there are four tests when the user selects the Validation option on the Toy Maintenance Menu, they are all executed instead of displaying a third level menu. Thus, each test cannot be run individually, only as a set. This applies to the Validation Dump Routine.

Upon initiating the TOY validation, the test results for each individual test appears on the response screen. The resulting data collected for all tests is stored in one validation dump file for viewing by the user.

7.7.1.1 Channels A and B Static Load and Read Tests.

The Static Load and Read Tests verify the operation of both channels A and B with the TOY board being in a static mode, i.e., interrupts disabled. This is accomplished by first selecting the channel to be tested and then writing a set of three halfwords to the input buffer of the TOY board. Once the data is sent to the board, a command is sent to transfer the data to the output buffer where the three halfwords can then be read back. If the three halfwords written to the board do not match the three read back, then an error flag will mark this set of data for output to both the Validation Dump File and the Summary Log.

The reference data used in this test consist of the following:

a. One set of all 5's (i.e., 5555 5555 5555).

b. One set of all A's (i.e., AAAA AAAA AAAA).

c. Running 1 through a field of 0's.

d. Running 0 through a field of 1's.

Part "c" refers to having all three halfwords set to 0 except for the most significant bit of the first halfword, which is set to 1. In each subsequent set of three halfwords the 1 moves one bit toward the least significant bit of the third halfword. Similarly, in part "d" the 0 bit is shifted one bit at a time through the three halfwords, with all other bits set to 1. The corresponding validation dump file will contain the results for each channel, listing the test data, any error flags and reference data for each set of three halfwords. The data dump generated by this test is formatted as shown below:

ROW	REFERENCE DATA	ERROR FLAGS	OUTPUT DATA
1	5555 5555 5555		5555 5555 5555
2	AAAA AAAA AAAA		AAAA AAAA AAAA
3	0 0 0		0 0 0
4	8000 0 0		8000 0 0
"	" " "		" " "

If any error flags are set during the testing of each channel a FAILURE message will be displayed for that particular channel test; otherwise, a SUCCESSFUL message will be displayed on the response screen.

7.7.1.2 Channels A and B Dynamic Load and Read Tests.

The Dynamic Load and Read Tests verify the operation of both channels A and B with the TOY board being in a dynamic mode, i.e., interrupts enabled. This is accomplished by first selecting the channel to be tested and then writing a set of three halfwords to the input buffer of the TOY board. After the third word is

received by the TOY board, an interrupt is generated causing the ISR to read the first two halfwords. If the first two halfwords written to the board do not match the two read back, then an error flag will mark this set of data for output to both the Validation Dump File and to the Summary Log.

The reference data used in this test consists of the following:

a. One set of all 5's (i.e., 5555 5555).

b. One set of all A's (i.e., AAAA AAAA).

c. Running 1 through a field of 0's.

d. Running 0 through a field of 1.

Part "c" refers to having all three halfwords set to zero except for the most significant bit of the first halfword, which is set to 1. In each subsequent set of three halfwords the 1 moves one bit toward the least significant bit of the third halfword. Similarly, in part "d" the 0 bit is shifted one bit at a time through the three halfwords, with all other bits set to 1.

The corresponding validation dump file will contain the results for each channel, listing the test data, any error flags, and reference data for each set of three halfwords. The data dump generated by this test is formatted as shown below:

ROW	REFERENCE DATA	ERROR FLAGS	OUTPUT DATA
1	5555 5555		5555 5555
2	AAAA AAAA		AAAA AAAA
3	0 0		0 0
4	8000 0		8000 0000
"	" "		" "

If any error flags are set during the testing of each channel a FAILURE message will be displayed for that particular channel test; otherwise, a SUCCESSFUL message will be displayed on the response screen.

7.7.2 Diagnostic Routine No. 1.

The diagnostic routine No. 1 for the TOY gives the user total control in programming the TOY board. When the routine is selected, the following message appears on the control screen and prompts the user for a response:

```
     ADIAG:
     ADIAG:  ENTER ITERATION COUNT (0=CONTINUOUS)
ADIAG>
```

The user then enters a decimal number at the control terminal. This number is a parameter used by the diagnostic routine to define the number of times any function will be executed when selected. If no value is entered, the parameter

defaults to 0, which is the continuous mode. After the number is entered the RETURN key is pressed. Then the TOY diagnostic No. 1 menu appears on the control screen as shown below:

```
ADIAG:
ADIAG:  ***  TOY DIAGNOSTIC  ***
ADIAG:  1 - OUTPUT COMMAND
ADIAG:  2 - OUTPUT DATA
ADIAG:  3 - INPUT MESSAGE
ADIAG:  4 - STATUS
ADIAG:  5 - SHOW INTERRUPT COUNTER
ADIAG:  6 - CLEAR INTERRUPT COUNTER
ADIAG:  7 - END DIAGNOSTIC
ADIAG:
ADIAG:  ENTER FUNCTION
ADIAG>
```

From the control terminal the user can select a function by typing the number preceding the function shown on the menu and then pressing the RETURN key. These functions are:

a. OUTPUT COMMAND. This function outputs a byte command, defined by the user, to the TOY Receiver. When this function is selected the user is prompted for the command as follows:

```
ADIAG:  ENTER COMMAND
ADIAG>
```

The user then enters the command in a hexadecimal format at the control terminal and presses the RETURN key. The structure of the command is defined in appendix D.

b. OUTPUT DATA. This function outputs a 16-bit data word, defined by the user, to the TOY. When this function is selected the user is prompted for the word as follows:

```
ADIAG:  ENTER DATA
ADIAG>
```

The user then enters the data in hexadecimal format at the control terminal and presses the RETURN key. The data entered can have any value. This data is then loaded into the Input Data Buffer. The format for the TOY Receiver messages is defined in appendix D.

c. INPUT MESSAGE. This function reads three 16-bit halfwords from the TOY. The data is read from the TOY Output Data Buffer. When this function is selected the following prompt appears on the control screen:

```
        ADIAG:
        ADIAG:  DO YOU WANT DATA DISPLAYED ON TERMINAL?(Y/N)
    ADIAG>
```

If the user enters a Y, data is displayed on the control screen as follows:

```
ADIAG:  INPUT MESSAGE = xxxx xxxx xxxx
```

where xxxx is a hexadecimal value.

If the user does not want data displayed, an N is entered followed by pressing the RETURN key. Generally this is done to increase the rate the data is read from the TOY when using an oscilloscope for debugging purposes.

d. STATUS. This function reads the TOY device status byte and displays it on the control screen as follows:

```
ADIAG:  STATUS = xx
```

where xx represents the status byte in hexadecimal format. Currently, the status byte is undefined and should be 0.

e. SHOW INTERRUPT COUNT. This function reads the memory location which holds the number of times the TOY interrupt service routine was called and then displays the count on the control screen as follows:

```
ADIAG:
ADIAG:  INTERRUPT COUNT = xxxx
```

where xxxx represents the number of interrupts serviced.

f. CLEAR INTERRUPT COUNTER. This function clears the memory location which holds the number of times the TOY interrupt service routine was called and then executes the SHOW INTERRUPT COUNT function.

g. END DIAGNOSTIC. This function returns the user to the TOY Maintenance Menu and leaves the TOY board in its current state, i.e., if the the TOY is placed in a particular diagnostic mode it will remain in that mode after the user returns to the device menu.

7.8 RANDOM NUMBER GENERATOR.

The device menu for the Random Number Generator (RNG) logic is shown in figure 7.8-1 as it appears on the control screen. Access to this menu is through option 11 of the ARIES Maintenance Menu (refer to figure 4-2).

```
        ADIAG:
        ADIAG:  ****************************
        ADIAG:  ****   RNG MAINTENANCE   ****
        ADIAG:  ****************************
        ADIAG:  1 - VALIDATION
        ADIAG:  2 - DUMP
        ADIAG:  3 - HELP
        ADIAG:  4 - EXIT
        ADIAG:  5 - DIAG #1
    ADIAG>
```

FIGURE 7.8-1. RNG OPTION SCREEN

Referring to figure 7.8-1 there are five options available on the RNG Maintenance Menu:

a. To run the RNG Validation Test Routine.

b. To run the RNG Validation Data Dump Routine.

c. To access the RNG Help Text File.

d. To return to the System Maintenance Menu.

e. To access diagnostic routine No. 1.

There is no validation test selection menu for the RNG since there is only one test routine. When the validation option is selected, the RNG validation test is immediately run. Likewise, there is no data dump selection menu for the RNG for the same reason. When the dump option is selected, the RNG data dump is immediately run. These routines are discussed in section 7.8.1.

When option 3 is selected, the RNG help text file appears on the response screen. This help text file provides a brief description on all of the routines accessible under the RNG Maintenance Menu. Refer to appendix C for the listing of the RNG Help Text File.

When option 4 is selected, the user is returned to the System Maintenance Menu.

When option 5 is selected, the diagnostic routine is initiated. The user is prompt by the diagnostic to define operating parameters. This diagnostic routine is described in detail in section 7.8.2.

7.8.1 Validation Test and Data Dump Routine.

The RNG Validation Test verifies the RNG logic and the interface between the CPU and the RNG. This is accomplished by reading 16-bit positive integers from the RNG and comparing the integers with values generated by a software algorithm which emulates the RNG hardware function. The RNG is a 17-bit maximum uniform random number generator which completes one full number sequence every 2 17-1 times before the sequence is repeated. However, it is not necessary to run through the complete sequence to fully verify the RNG. The test begins by presetting the RNG to a known value. The software algorithm is initialized to the same value. Each time a read is executed, the RNG steps to the next positive integer. Likewise, the algorithm is stepped through its sequence for the next reference value. The read and compare cycle is repeated 50 times.

The pass criteria for this test is the successful comparison of all the random positive integers generated by the RNG with the values generated by the software algorithm. If any comparison fails to match, the test is declared a failure. The result of the test is written in the Summary Log.

The data dump file gneerated by the RNG validation test is formatted as shown below:

INDEX	REF. DATA	TEST DATA	ERROR FLAGS
1	6000	6000	
2	1000	1000	
3	5800	5800	
"	"	"	

The first lines consists of labels that identify the columns beneath them. The reference data generated via software (REF.DATA) and the data read from the RNG (TEST DATA) are listed side by side for easy comparison. An error flag "****" is added in the ERROR FLAG column along side the data that failed to match. A complete listing of this dump file is shown in appendix B.

7.8.2 Diagnostic Routine No. 1.

The diagnostic routine No. 1 for the RNG prompts the user for information to exercise the RNG hardware. The RNG is a simple device so no function menu exists. The only command to the RNG is the preset (initialize) command and only data can be read from the device. When the RNG diagnostic routine is selected, the user is prompted to respond to four questions. The first question that appears on the control screen is:

WRITE RANDOM NUMBERS ON TERMINAL (Y/N)

This options provides the user the choice of monitoring the random numbers generated by the RNG. If the user answers Y for yes, the random numbers are displayed on the control screen. If the user answers N for no, the random numbers are just read. The next question appearing on the screen is:

ENTER WAIT TIME IN MILLISECONDS (0=NO WAIT)

This option is used to control the rate at which random numbers are read from the RNG. If the user chose not to display the random numbers he would normally select 0 to run at the fastest read cycle. This is generally done when using an oscilloscope to monitor logic operations. If the user chose to display the data read he may enter a wait period between each read, i.e., 500 milliseconds, in order to review the data before it is scrolled off of the screen. The nest question appearing on the screen is:

ENTER NUMBER OF ITERATIONS (0=CONTINUOUS)

This option defines the number of reads that will be performed. If the user enters 0 and depresses the RETURN key or just presses the RETURN key the program will read continuously. The last question appearing on the screen is:

INITIALIZE THE R.N.G. (Y/N)

If the user enters Y for yes, the RNG is set a preset command. If the user enters a N for no, no command is sent to the RNG.

After all of these prompts are answered, the diagnostic is executed. The diagnostic stops when the number of reads equals the iteration count and the following question appears on the control screen:

DO YOU WISH TO CONTINUE RNG DIAG ROUTINE? (Y/N)

If the user selects yes the diagnostic is terminated and the user is returned to the RNG Maintenance Menu. If the user selects no, the user is prompted with the same series of four questions.

7.9 MISSING INTERROGATION TIMER (MIT).

There are a total of five validation routines and one standard diagnostic No. 1 routine described below. The following second level menu, MIT MAINTENANCE MENU, will appear on the control screen when the MIT function is selected from the ARIES MAINTENANCE MENU:

```
     ADIAG:  ********************************
     ADIAG:  ****   MIT MAINTENANCE MENU   ****
     ADIAG:  ********************************
     ADIAG:  1 - VALIDATION
     ADIAG:  2 - DUMP
     ADIAG:  3 - HELP
     ADIAG:  4 - EXIT
     ADIAG:  5 - DIAG #1
ADIAG>
```

7.9.1 Validation Test and Data Dump Routines.

MIT validation tests can be selected through the 1 - VALIDATION option on the MIT MAINTENANCE MENU. When this option is selected, the MIT Validation Menu will appear on the control screen as shown in figure 7.9.1-1.

Referring to figure 7.9.1-1 there are five validation tests for the MIT:

a. Static Load and Read Back Test

b. Counter Test

c. Interrupt Timing Test w/UIT and PIC

d. Interrupt Timing Test w/UIT, RCVR, and PIC

e. Interrupt Timing Test w/MIT, UIT, RCVR, and PIC

These tests along with their associated data dumps are discussed in sections 7.9.1.1 through 7.9.1.5.

7.9.1.1 Static Load and Read Back Test.

The Static Load and Read Back Test verifies the MIT input buffer and counter as well as the associated data lines. In a static mode, the input buffer is loaded with an 8-bit value, which is then loaded into the counter. The contents of the counter is then read back for comparison with the data originally loaded into the input buffer. The data sequence cycles from 00 to FF (HEX) inclusively. An error flag will mark each set of data where the data read back from the counter does not match the data written to the input buffer. The following is a sample of the output format in the data dump file:

```
        ADIAG:
        ADIAG:  ***  MIT VALIDATION  ***
        ADIAG:  1 - STATIC LOAD & READ BACK TEST
        ADIAG:  2 - COUNTER TEST
        ADIAG:  3 - TEST MIT W/ UIT AND PIC
        ADIAG:  4 - TEST MIT W/ UIT, RCVR AND PIC
        ADIAG:  5 - TEST MIT TRIGGER UIT
        ADIAG:  6 - EXIT
        ADIAG:  0 - ALL (DEFAULT)
    ADIAG>
```

FIGURE 7.9.1-1 MIT VALIDATION MENU SCREEN

DATA	FLAGS	DATA	FLAGS	DATA	FLAGS	...
0		32		64		...
1		33		65		...
2		34		66		...
3		35		67		...
"		"		"		"

The DATA column consists of the data read from the counter; since the data increments sequentially starting at 0 there is no reference data column for the data loaded into the input buffer; also, an error flag in the FLAGS column will consist of a ** if an error should exist. A complete data dump listing is shown in appendix B.

7.9.1.2 Counter Test.

The Counter Test verifies the dynamic capability of the MIT counter. In this test the counter is initially load with 00; then cycles through an "increment counter' and "read back" sequence, verifying each read back until the counter is incremented FF times. An error flag will occur if the data read from the counter is not one increment greater than the previous data read. The data dump format is the same as the 1 used for the Static Load and Read Back Test as shown above. A complete data dump listing for the Counter Test is shown in appendix B.

7.9.1.3 Interrupt Sequence Test No. 1.

The first interrupt timing sequence test is the Test MIT with UIT and Precision Interval Counter (PIC) Interrupt Timing Routine, which tests the MIT using the UIT and the PIC. In this testthe PIC interrupts are used to trigger the UIT, which causes an interrupt 3929 microseconds later. The UIT interrupt in turn triggers the MIT. Since the Uplink Receiver (RCVR) is not enabled, the MIT will not be disabled by the RCVR and will interrupt 66 microseconds after the UIT. Thus, this test will verify the MIT's ability to sense missing RCVR interrupts. For this test both the MIT and UIT interrupt counts should be equal. The following data dump format shows the interrupt counts for the MIT, UIT, and PIC; expected values are also given, which are used as the pass criteria for the test:

MIT COUNTER =	40	(expected count = 40)
UIT COUNTER =	40	(expected count = 40)
PIC COUNTER =	42	(expected count = 42)

All counter values are given in hexadecimal format. For a complete data dump listing for this test refer to appendix B.

7.9.1.4 Interrupt Sequence Test No. 2.

The second interrupt timing sequence test is the Test MIT with UIT, RCVR, and PIC Interrupt Timing Routine, which tests the MIT using the UIT, the RCVR, and the PIC. In this test, the PIC interrupt triggers the RCVR to interrupt, which, in turn, triggers the UIT. After 3929 microseconds the UIT interrupts and triggers the MIT. Within the following 66 microseconds before the MIT generates an interrupt, the next RCVR interrupt occurs and prevents the MIT from interrupting.

Also, the UIT is triggered again for the next sequence. For this test both the RCVR and UIT interrupt counts should be equal and the MIT interrupt count should be 0 when all of the RCVR interrupts have been detected.

The following data dump format shows the interrupt counts for the MIT, UIT, RCVR, and PIC; expected values are also given, which are used as the pass criteria for the test:

```
 MIT COUNTER =   0   (expected count =  0)
 UIT COUNTER =  40   (expected count = 40)
 PIC COUNTER =  42   (expected count = 42)
RCVR COUNTER =  41   (expected count = 41)
```

All counter values are given in hexadecimal format. For a complete data dump listing for this test refer to appendix B.

7.9.1.5 Interrupt Sequence Test No. 3.

The third interrupt timing sequence test is the Test MIT Trigger UIT Interrupt Timing Routine, which tests the MIT triggering the UIT when the RCVR fails to detect an expected All-Call interrogation. In this test, every sixth RCVR interrupt is skipped, thus causing an MIT interrupt for each one skipped. When the RCVR interrupt is skipped, the MIT triggers the UIT for the next sequence; therefore, the MIT operation is tested for both missed and detected RCVR interrupts. For this test the sum of the MIT and RCVR interrupt counters should equal that of the UIT interrupt counter. It should be noted that the RCVR interrupt counter will contain an extra interrupt because the RCVR is triggered after the UIT is terminated and before the RCVR is terminated. The following data dump format shows the interrupt counts for the MIT, UIT, PIC, and RCVR; expected values are also given, which are used as the pass criteria for the test:

```
 MIT COUNTER =   A   (expected count =  A)
 UIT COUNTER =  40   (expected count = 40)
 PIC COUNTER =  42   (expected count = 42)
RCVR COUNTER =  37   (expected count = 37)
```

All counter values are given in hexadecimal format. For a complete data dump listing for this test refer to appendix B.

7.9.2 Diagnostic Routine No. 1.

The diagnostic routine No. 1 for the MIT gives the user total control in programming the MIT. When the routine is selected, the following message appears on the control screen and prompts the user for a response:

```
     ADIAG:
     ADIAG:  ENTER ITERATION COUNT (0=CONTINUOUS)
ADIAG>
```

The user then enters a decimal number at the control terminal. This number is a parameter used by the diagnostic routine to define the number of times any function will be executed when selected. If no value is entered, the parameter

defaults to 0, which is the continuous mode. After the number is entered the RETURN key is pressed. Then the MIT diagnostic No. 1 menu appears on the control screen as shown below:

```
ADIAG:
ADIAG:  ***  MIT DIAGNOSTIC  ***
ADIAG:  1 - OUTPUT COMMAND
ADIAG:  2 - OUTPUT DATA
ADIAG:  3 - INPUT DATA
ADIAG:  4 - SHOW INTERRUPT COUNTER
ADIAG:  5 - CLEAR INTERRUPT COUNTER
ADIAG:  6 - SET/RESET PIC ISR POINTER
ADIAG:  7 - EXIT DIAGNOSTIC
ADIAG:
ADIAG:  ENTER FUNCTION
ADIAG>
```

From the control terminal the user can select a function by typing the number preceding the function shown on the menu and then pressing the RETURN key. These functions are:

a. OUTPUT COMMAND. This function outputs an 8-bit command, defined by the user, to the MIT. When this function is selected the user is prompted for the command as follows:

```
ADIAG:  ENTER COMMAND
ADIAG>
```

The user then enters the command in a hexadecimal format at the control terminal and presses the RETURN key. The structure of the command is defined in appendix D.

b. OUTPUT DATA. This function outputs an 8-bit data word, defined by the user, to the MIT. When this function is selected the user is prompted for the word as follows:

```
ADIAG:  ENTER DATA
ADIAG>
```

The user then enters the data in hexadecimal format at the control terminal and presses the RETURN key. The data entered can have any value. This data is then loaded into the Input Data Buffer. The data format for the MIT is defined in appendix D.

c. INPUT DATA. This function reads an 8-bit word from the MIT. The data is read from the MIT Output Data Buffer. When this function is selected the following prompt appears on the control terminal:

```
ADIAG:  DO YOU WANT DATA DISPLAYED ON TERMINAL?(Y/N)
```

If the user enters a Y, data is displayed on the control screen as follows:

```
ADIAG:  INPUT MESSAGE = xx
```

where xx is a hexadecimal value.

If the user does not want data displayed, an N is entered followed by pressing the RETURN key. Generally this is done to increase the rate the data is read from the MIT when using an oscilloscope for debugging purposes.

d. SHOW INTERRUPT COUNT. This function reads the memory location which holds the number of times the MIT interrupt service routine was called and then displays the count on the control screen as follows:

```
ADIAG:
ADIAG:  INTERRUPT COUNT = xxxx
```

where xxxx represents the number of interrupts serviced.

e. CLEAR INTERRUPT COUNTER. This function clears the memory location which holds the number of times the MIT interrupt service routine was called and then executes the SHOW INTERRUPT COUNT function.

f. SET/RESTORE PIC ISR POINTER. This function toggles the control of the PIC between the ADIAG.TSK and the 3230 CPU. When this option is chosen the following menu will appear:

```
     ADIAG:  ENTER FUNCTION:
     ADIAG:  1 - SET P.I.C. ISR POINTER
     ADIAG:  2 - RESTORE P.I.C. ISR POINTER
ADIAG>
```

Selection of option 1 will change the PIC ISR pointer, so that each PIC interrupt will be serviced by the ARIES Maintenance Software ISR. Option 2 will return the PIC interrupt pointer back to its original state, where the 3230 processes the interrupt with its own ISR.

g. EXIT DIAGNOSTIC. This function returns the user to the MIT Maintenance Menu and leaves the MIT board in its current state, i.e. if the the MIT is placed in a particular diagnostic mode it will remain in that mode after the user returns to the device menu.

7.10 STU UPLINK TRANSMITTER.

The Uplink Transmitter is one of two special purpose digital devices in the STU which ensures that the ARIES is working correctly. The device menu for the STU

Uplink Transmitter board is shown in figure 7.10-1 as it appears on the control screen. Access to this menu is through option 13 of the ARIES Maintenance Menu (refer to figure 4-2).

```
        ADIAG:
        ADIAG:  ********************************
        ADIAG:  ****  STU TRANSMITTER MENU  ****
        ADIAG:  ********************************
        ADIAG:  1 - VALIDATION
        ADIAG:  2 - DUMP
        ADIAG:  3 - HELP
        ADIAG:  4 - EXIT
        ADIAG:  5 - DIAG #1
        ADIAG:  6 - DIAG #2
    ADIAG>
```

FIGURE 7.10-1. UPLINK TRANSMITTER BOARD OPTION SCREEN

Referring to figure 7.10-1 there are six options available on the STU Transmitter Maintenance Menu:

a. To access the STU Transmitter Validation Test Menu.

b. To access the STU Transmitter Validation Data Dump Menu.

c. To access the STU Transmitter Help Text File.

d. To return to the System Maintenance Menu.

e. To access diagnostic routine No. 1 function menu.

f. To access diagnostic routine 7.10.1 and 7.10.2.

These options are described in sections 7.10.1 and 7.10.2.

7.10.1 Validation Test and Data Dump Routines.

Access to the STU Transmitter board validation tests is through the VALIDATION option on the STU Transmitter Menu. When VALIDATION is selected, the STU Transmitter Validation Menu appears on the control screen as shown in figure 7.10.1-1.

```
      ADIAG:
      ADIAG:  ******************************************
      ADIAG:  ****   STU TRANSMITTER VALIDATION MENU   ****
      ADIAG:  ******************************************
      ADIAG:  1 - AZIMUTH TEST
      ADIAG:  2 - MAX RANGE COUNTER TEST
      ADIAG:  3 - PAM/DPSK MODULATION TEST
      ADIAG:  4 - EXIT
      ADIAG:  0 - ALL(DEFAULT)
ADIAG>
```

FIGURE 7.10.1-1. STU TRANSMITTER TEST MENU SCREEN

The user selects the appropriate option number at the control terminal to run the desired validation test. The interprocessor-communication link initiates the actual test on the STU CPU (refer to appendix E for detailed description of the interprocessor-communication link). After executing an individual test, the maintenance menu reappears on the control screen. This allows the user to repeat the same test or chose a different one. Selecting ALL initiates the execution of all of the test in consecutive order including the EXIT option, which returns the user to the STU Transmitter Maintenance Menu. The dump menu is similar to that of the Validation Menu. These tests along with their associated data dumps are discussed in sections 7.10.1.1 through 7.10.1.3.

7.10.1.1 Azimuth Counter Logic Test.

The Azimuth Counter Logic Test checks the azimuth counter logic by taking samples of azimuth data at 0.1-second intervals for 16 seconds. This test is similar to the Uplink Receiver Azimuth Generator Logic Validation Test (see section 7.2.1.3). The transmitter is programmed to enable azimuth data to be sampled. All together 161 azimuth samples are collected and stored in task common memory of the STU after which the average azimuth rate along with the root mean square and standard deviation of the azimuth samples are calculated. During this test the PIC, part of the STU, is programmed to provide the timing interval of 0.1 second for the sampling of azimuth data.

The Azimuth Counter Logic Validation dump file is updated each time the test is executed. The format of this dump is identical to that of the Azimuth Generator Logic Test for the Uplink Receiver (see section 7.2.1.3). A complete listing of this file is shown in appendix B.

If the difference between azimuth samples is equal to 0 the following error message is written to the dump file and the test is declared a failure.

THE AZIMUTH RATE WAS EQUAL TO ZERO

7.10.1.2 Maximum Range Counter Logic Test.

The Maximum Range Logic Test verifies that the STU Transmitter max range register is being properly loaded. This is accomplished by setting up the STU Transmitter to enable the CPU to sample the max range register, then loading a predetermined data sequence into the register and reading the output of the register after each load. The data sequence starts with a sliding 1 through a field of 0's, then a sliding 0 through a field one 1, then finally a set of variable halfword values.

The max range register actually determines the maximum allowable time-of-transmission for any interrogation. However, within this document this register will be referred to as the max range counter.

The pass criteria for this test is the successful comparison of the data read from the max range register with the data sent to the register. If any of the comparisons should fail, the test would be declared a failure. At the completion of the test the result is written to the Summary Log.

The associated dump routine creates an ARIES disc file which contains the reference data sent to the max range register (the actual data read from the register) and the error map indicating any errors, should they occur. At the start of the dump routine, the max range data and the error map is fetched from the task common memory of the STU and stored along with a data reference table in the associated dump file. The data dump file generated by this routine is formatted as follows:

RECEIVED MAX RANGE	ERROR MAP REFERENCE MAX RANGE
8000	8000
4000	4000
2000	.
.	.
.	.
F0F0	F0F0

The first line contains the labels that identify the data located in the columns beneath them. The data read from the max range register and the reference data are listed side by side with the error column (ERROR MAP) positioned between them. An error flag (****) is added between any of the rows which fail to match to highlight failures.

7.10.1.3 PAM/DPSK Modulation Test.

The PAM/Differential Phase Shift Keying (DPSK) Modulation Test verifies that the STU Transmitter can successfully assemble and transmit both All-Call and Roll-Call interrogations. This is accomplished with the support of on-board diagnostic logic. This logic consists of PAM decoder sampling logic, which provides information on the output PAM control signal, and DPSK sampling logic, which records Mode S data on the output DPSK control signal. From this information the type of interrogation transmitted and, in the case of Mode S interrogations, the data content can be checked and verified.

When the validation is initiated, the transmitter is disarmed and reset to place the device in a known state. Then the max range counter is set up and a command is issued enabling device interrupts which, in turn, starts the range time-of-transmission) counter. When the range count matches the value set up in the max range register a maximum range interrupt is generated and the range counter is reset. At this point the first interrogation data block is loaded for transmission. The interrogation is transmitted when the range count matches the range value of the interrogation data block. At the completion of transmission an interrogation interrupt is generated. When the interrogation interrupt is detected the PAM decoder register is read along with the Mode S interrogation data FIFO (part of the DPSK sampling logic) if the interrogation was a Mode S type. At the next max range interrupt the process is repeated until a set of 12 interrogations are loaded.

The pass criteria for this test is the successful identification of each interrogation transmitted based on the PAM information recorded and the successful comparison of the Mode S data transmitted with the Mode S data expected. If any of these results should fail, the test would be declared a failure. The test would be declared a failure if any of the max range interrupts or interrogation interrupts are not detected. The missing interrupts are detected via software timeouts and the PAM and Mode S data expected is filled with B's for each interrogation lost.

The associated dump routine creates a dump file in the following format:

```
REFERENCE PAM  ERROR MAP DETECTED PAM
     xx         ****              rr  MODE type
     xx         ****              rr  MODE type
                  .
                  .

REFERENCE MODES  hhhh hhhh hhhh hhhh hhhh hhhh hhhh
ERROR MAP        **** **** **** **** **** **** ****
DETECTED MODES   dddd dddd dddd dddd dddd dddd dddd
                  .
                  .
```

where, in the top part which contains the PAM data, xx is the reference PAM data and rr is the PAM byte read from the transmitter. The mode type is also shown to indicate the interrogation type. In the lower part, which contains the Mode S data, hhhh is the reference Mode S data and dddd is the received loopback data. The error map is shown in both data formats with **** as an error flag. The dump file records if the test was SUCCESSFUL or FAILURE.

7.10.2 Diagnostic Routines.

There are two diagnostic routines available for debugging the STU Transmitter digital board. They are referred to as DIAG #1 and DIAG #2. When a particular diagnostic routine is selected, the appropriate function menu appears on the control screen. The functions available in these menus are discussed in sections 7.10.2.1 and 7.10.2.2.

7.10.2.1 Diagnostic Routine No. 1.

The diagnostic routine No. 1 for the STU Transmitter gives the user total control in programming this device. When the routine is selected, the following message appears on the control screen and prompts the user for a response:

```
        ADIAG:
        ADIAG:  ENTER ITERATION COUNT (0=CONTINUOUS)
    ADIAG>
```

The user then enters a decimal number at the control terminal. This number is a parameter used by the diagnostic routine to define the number of times any function will be executed when selected. If no value is entered, the parameter defaults to 0 which is the continuous mode. The STU Transmitter diagnostic No. 1 menu then appears on the control screen as shown below:

```
        ADIAG:
        ADIAG:  *** STU TRANSMITTER DIAGNOSTIC #1 ***
        ADIAG:
        ADIAG:  1 - OUTPUT COMMAND
        ADIAG:  2 - STATUS
        ADIAG:  3 - INPUT DATA
        ADIAG:  4 - OUTPUT DATA
        ADIAG:  5 - SHOW INTERRUPT COUNTER
        ADIAG:  6 - CLEAR INTERRUPT COUNTER
        ADIAG:  7 - END DIAGNOSTIC
        ADIAG:
        ADIAG:  ENTER FUNCTION
    ADIAG>
```

From the control terminal the user can select a function by typing the number preceding the function shown on the menu and then pressing the RETURN key. If the user has chosen the continuous iteration mode and executes one of the functions, the following prompt appears on the control screen to allow the user to stop execution of that function and return to the function menu:

```
    CONADIAG:
    CONADIAG:  HIT (RETURN) TO EXIT CONTINUOUS MODE.
    CONADIAG:
```

The functions available are:

a. OUTPUT COMMAND. This function outputs a byte command, defined by the user, to the STU Transmitter. When this function is selected a short list of commands are displayed for the user's convenience followed by a prompt for the command as illustrated below:

```
        ADIAG:
        ADIAG:  TRANSMITTER COMMANDS
        ADIAG:
        ADIAG:  02 - SET MAX RANGE
        ADIAG:  03 - LATCH AZIMUTH
        ADIAG:  10 - TRANSMITTER DIAGNOSTIC
        ADIAG:  60 - ENABLE INTERRUPTS, RESET
        ADIAG:  E0 - DISARM, RESET
        ADIAG:
        ADIAG:  ENTER COMMAND
    ADIAG>
```

The user then enters the command in a hexadecimal format at the control terminal and presses the RETURN key. The structure of the byte command is defined in appendix D.

b. STATUS. This function reads the device status byte of the STU Transmitter board and displays it on the control screen as illustrated below:

```
ADIAG:  STATUS = xx
```

where xx represents the status byte in hexadecimal format. The structure of the status byte is defined in appendix D.

c. INPUT DATA. This function reads a 16-bit halfword from the STU Transmitter. The source of data is determined by a command issued prior to fetching the data. The data could be read from the maximum range register, the azimuth register, the PAM decode register, or the Mode S interrogation data FIFO. When this function is selected the following prompt is displayed:

```
ADIAG:  ENTER NUMBER OF HALFWORDS TO BE READ
```

The user then enters the number of halfwords desired in decimal and presses the RETURN key. The data is then displayed on the control screen as follows:

```
ADIAG:
ADIAG:  INPUT DATA = xxxx
```

where xxxx is a hexadecimal value.

d. OUTPUT DATA. This function outputs a 16-bit halfword to the STU Transmitter. The output data is defined by the user in a hexadecimal format as shown in appendix D. The data can be loaded into the maximum range register or the Mode S data block transmission FIFO. The destination of the data is determined by a command issued prior to sending the data. When this function is selected the user is prompted for the halfword as follows:

```
                    ADIAG:  ENTER DATA
                ADIAG>
```

The user then enters the data at the control terminal. When the RETURN key is pressed, the data is loaded into the specified destination. The format for the interrogation messages is defined in appendix D.

e. SHOW INTERRUPT COUNTER. This function reads the memory location which holds the number of times the STU Transmitter ISR was called and displays the count on the control screen as follows:

```
ADIAG:
ADIAG:  INTERRUPT COUNT = dddd   (HEX xxxx)
```

where dddd represents the count in decimal and xxxx represents the count in hexadecimal.

f. CLEAR INTERRUPT COUNTER. This function clears the memory location which holds the number of times the STU Transmitter ISR was called and then executes the SHOW INTERRUPT COUNTER function displaying the following on the control screen:

```
ADIAG:
ADIAG:  INTERRUPT COUNT =    0    (HEX   0)
```

g. EXIT DIAGNOSTIC. This function returns the user to the STU Transmitter Maintenance Menu and leaves the STU Transmitter in its current state, i.e., if the STU Transmitter is placed in a particular diagnostic mode it will remain in that mode after the user returns to the device menu.

7.10.2.2 Diagnostic Routine No. 2.

The STU Transmitter diagnostic routine No. 2 is a semiautomated bebugging tool used to track down hardware problems in the STU Transmitter. The diagnostic routine is initiated by selecting DIAG #2 on the STU Transmitter Maintenance Menu. The diagnostic menu appears on the control screen as illustrated below when this option is selected:

```
        ADIAG:
        ADIAG:  *** STU TRANSMITTER DIAGNOSTIC #2 ***
        ADIAG:
        ADIAG:  1 - OUTPUT/ENABLE MAX RANGE COUNTER
        ADIAG:  2 - OUTPUT INTERROGATION
        ADIAG:  3 - DISARM/RESET DEVICE
        ADIAG:  4 - END DIAGNOSTIC
        ADIAG:
        ADIAG:  ENTER FUNCTION
    ADIAG>
```

As shown on the menu there are four functions available:

a. OUTPUT/ENABLE MAX RANGE COUNTER. This function loads the maximum range register with the value specified by the user, then enables the device to generate interrupts. When this function is selected the user is prompted with the following query:

```
        ADIAG:
        ADIAG:  ENTER MAX RANGE VALUE
        ADIAG:  XXXX (HEX)
    ADIAG>
```

where XXXX represents a hexadecimal value.

b. OUTPUT INTERROGATION. This function allows the user to output and change the type of interrogation to be sent to the device. Upon selecting this function a prompt to enter the number of iterations is displayed as follows:

```
CHGINTER:  ENTER ITERATION COUNT (0 = CONTINUOUS)
```

The user then enters the number in decimal format and presses the RETURN key. Next, the query for the type of interrogation to send is displayed as shown in figure 7.10.2.2-1. At this menu the user selects the desired interrogation by entering the option number preceding it on the menu and pressing the RETURN key. If an option 0 through 6 is selected, the following prompt appears on the control screen requesting the time-of-transmission, referred to as the range, for the interrogation:

```
        CHGINTER:  ENTER 20-BIT INTERROGATION RANGE
        CHGINTER:  00#X XXXX
    CHGINTER>
```

The # is the interrogation type defined by the previous query and X XXXX is the 20-bit range (time-of-transmission) to be added with the given type.

If option 7 or 8 is selected, the following prompt appears on the control screen requesting the range for the interrogation plus the Mode S data to be transmitted:

```
    CHGINTER:  ENTER 20-BIT INTERROGATION RANGE AND MODE S DATA
    CHGINTER:  00#X XXXX xxxx xxxx xxxx xxxx xxxx xxxx xxxx
CHGINTER>
```

where # is the interrogation type given in the previous query, X XXXX is the 20-bit range, and xxxx is the Mode S data to be entered in four halfwords if it

```
        CHGINTER:
        CHGINTER:  **** INTERROGATION TYPE MENU ****
        CHGINTER:
        CHGINTER:  0 - MODE 3A (NO P4)
        CHGINTER:  1 - MODE 3A (LONG P4)
        CHGINTER:  2 - MODE 3A (SHORT P4)
        CHGINTER:  3 - MODE C  (NO P4)
        CHGINTER:  4 - MODE C  (LONG P4)
        CHGINTER:  5 - MODE C  (SHORT P4)
        CHGINTER:  6 - MODE 2
        CHGINTER:  7 - MODE S  SHORT
        CHGINTER:  8 - MODE S  LONG
        CHGINTER:  9 - EXIT
        CHGINTER:
        CHGINTER:  ENTER INTERROGATION TYPE (0-8)
CHGINTER>
```

FIGURE 7.10.2.2-1. INTERROGATION TYPE SELECTION MENU

is a Mode S Short interrogation, and seven halfwords if it is a Mode S Long interrogation, as defined in the output data halfword interrogation block formats defined in appendix D.

If option 9 is selected the user is returned to the STU Transmitter Diagnostic No. 2 Menu.

c. DISARM/RESET DEVICE. This function resets the STU Transmitter and disarms the device interrupts. Typically, this function is executed prior to selecting the first two functions.

d. EXIT. This function resets and disarms the STU Transmitter and returns the user to the STU Transmitter Maintenance Menu.

7.11 STU DOWNLINK RECEIVER.

The Downlink Receiver board is the second of two special purpose digital devices in the STU which ensures that the ARIES is working correctly. The device menu for the Downlink Receiver board is shown in figure 7.11-1 as it appears on the control screen. Access to this menu is through option 14 of the ARIES Maintenance Menu (refer to figure 4-2).

Referring to figure 7.11-1 there are five options available on the STU Receiver Maintenance Menu:

a. To access the STU Receiver Validation Test Menu.

b. To access the STU Receiver Validation Data Dump Menu.

c. To access the STU Receiver Help Text File.

d. To return to the System Maintenance Menu.

e. To access diagnostic routine No. 1 function menu.

```
ADIAG:  ******************************
ADIAG:  ****   STU RECEIVER MENU   ****
ADIAG:  ******************************
ADIAG:  1 - VALIDATION
ADIAG:  2 - DUMP
ADIAG:  3 - HELP
ADIAG:  4 - EXIT
ADIAG:  5 - DIAG #1
ADIAG>
```

FIGURE 7.11-1. STU DOWNLINK RECEIVER BOARD OPTION SCREEN

Selecting options 1 or 2 moves the user to a third level menu, the Validation Test Menu, or the Validation Data Dump Menu, respectively. From the Validation Test Menu, the user can run tests separately or as a set. Similarly, from the Validation Data Dump Menu, the user can run data dumps separately or as a set. The routines available in these menus are discussed in section 7.11.1.

Selecting option 3, the STU Receiver help text file is accessed and displayed on the response screen. The STU Receiver Help Text File provides a brief description on all of the routines accessible under the STU Receiver Maintenance Menu (refer to appendix C for the complete listing of the STU Receiver Help Text File).

Selecting option 4, the user is returned to the System Maintenance Menu.

Selecting option 5 moves the user to the diagnostic No. 1 function menu. The functions available on this menu are discussed in section 7.11.2.

7.11.1 Validation Test and Data Dump Routines.

Access to the STU Downlink Receiver board validation tests is through the VALIDATION option on the STU Receiver Menu. When this option is selected, the STU Receiver Validation Menu appears on the control screen as shown below:

```
ADIAG:  ****   STU RECEIVER VALIDATION MENU   ****
ADIAG:  1 - REPLY DATA DETECT/DECODE TEST
ADIAG:  2 - RANGE TEST
ADIAG:  3 - AZIMUTH TEST
ADIAG:  4 - EXIT
ADIAG:  0 - ALL(DEFAULT)
ADIAG>
```

As noted above, there are three validation tests and three associated validation data dump routines. With this menu the user can run each test separately or as a set. The same applies with the validation data dumps. When a single test is selected the validation menu is returned on the control screen once the test is completed. This gives the user the flexibility of repeating the same validation test or selecting a different one. When the tests are run as a set, the EXIT option is executed after the tests are completed and the STU Receiver Maintenance Menu then appears on the control screen. The dump menu is similar to that of the validation menu. These tests along with their associated data dumps are discussed in sections 7.11.1.1 through 7.11.1.3.

7.11.1.1 Reply Detection and Decode Test.

The Reply Data Detection and Decode Test verifies that the STU Downlink Receiver can properly detect and decode replies and assemble reply data block messages on ATCRBS or short and long Mode S replies. This is accomplished by generating replies using onboard diagnostic support logic and digitally injected them into the front end of the receiver at an average rate of one per 512 microseconds. The reply types consist of four ATCRBS replies (two with the Special Position Indicator bit set), two short Mode S replies, and two long Mode S replies. The reply block messages generated for these replies are then read back by the CPU for evaluation. The successful evaluation of the reply messages blocks verifies bracket and preamble detection logic, the code assembly logic, and the Mode S parity decode logic of the STU Receiver.

The pass criteria for this test is the successful evaluation of the status word and the ATCRBS code or Mode S data of all eight reply message blocks. The range, azimuth, and the video amplitude information contained in each message is not evaluated by this test. The range and azimuth logic is checked by the range test and the azimuth test, respectively, which are discussed in the following two sections. The verification that video amplitude data is sampled correctly is implied by the successful operation of the power and monopulse tests discussed in sections 7.13.1 and 7.14.1.

In the event that no reply messages are detected (i.e., no interrupts are generated by the STU Downlink Receiver), a software timeout occurs and the test is declared a failure.

The data dump file generated by this test is formatted as shown below:

	STAT	W7	W8	W9	W10	W11	W12	W13
REC REPLY	xxxx	xxxx	xxxx	xxxx	xxxx	xxxx	xxxx	xxxx
MASK DATA	xxxx	xxxx	xxxx	xxxx	xxxx	xxxx	xxxx	xxxx
ERROR MAP	****	****	****	****	****	****	****	****
REF REPLY	xxxx	xxxx	xxxx	xxxx	xxxx	xxxx	xxxx	xxxx

The first line consists of labels identifying the data listed directly below them. The data below the STAT label is the status byte read from the STU receiver to identify the type of reply block to be stored after an interrupt is received (refer to appendix D for the description of the STU Receiver status byte). The data listed below the W7 through W13 labels are the code information

of each reply block (refer to appendix D for the format of the STU Receiver reply block messages). The second line is part of the reply message block (REC REPLY) read from the receiver and the determinable part of this information is presented on the third line (MASK DATA). The reference data (REF REPLY) which is the acceptance criteria, are on the forth line. If any errors should occur, an error flag (****) will be added between the masked data and the reference data to highlight the failure.

The columns are filled-in according to the reply type. If the reply type is an ATCRBS, then STAT and only W7 will have data. If the reply type is a MODE S short, then STAT and W7 through W10 will have data; if the reply type is a MODE S long, then STAT and W7 through W13 will have data.

If the software timeout occurred because no replies were received, a reply was missing the error message, MISSING OR NO INTERRUPT(S) AT REPLY NO: xx is written in the dump file. Also, FAILURE is written into the data file as the overall test result.

7.11.1.2 STU Range Bus and Logic Test.

The range test verifies that the STU Receiver board can successfully receive range data from the STU Transmitter board over the range bus between the two boards. This is accomplished through generation of replies by on-board reply diagnostic logic. The range data is extracted from reply messages generated as a result of detecting replies.

The test is initiated by resetting and disarming the STU Transmitter and loading the maximum range counter with the largest value it can hold. This is done to test the full dynamic range of the range counter. The Transmitter interrupt control logic is then placed in the disabled state to allow the range counter to increment.

The maximum range register should not be confused with the range counter both of which are on the STU Transmitter board (refer to digital logic schematic 6 of the STU Transmitter). The maximum range register places the upper limit on the range counter. When the range counter value reaches the value loaded into the maximum range register the range counter value is set back to 0.

Upon starting the range test, the STU Receiver is placed in an interrupt enabled state and the on-board reply generation logic is activated. The replies are generated at an average rate of one per 512 microseconds, 128 reply messages are collected to span the full dynamic range of the range counter. The range data is extracted from each reply message and stored for subsequent evaluation once all the samples have been collected.

No interrupts are generated by the STU Receiver if no replies are detected. A software timeout will occur and the test is declared a failure.

Once the reply range data is collected, it is compared with calculated range values to verify correct range data is being received from the STU Transmitter. The comparison is done by taking the previous reply range and adding to it an appropriate range constant, depending on the reply type. There are two range constants, one from a Mode S to an ATCRBS reply and the other from an ATCRBS to a Mode S reply. This, in turn, will calculate the next expected range. Since the

range counter on the STU Transmitter board is free running, the test will start at a random range count. Therefore, the wraparound check of the range count is necessary.

The pass criteria for this test is the successful prediction of the next reply range value based on the range value of the previous reply. If any of the range should fail to match, an error flag is added between the mismatched data and the test is declared a failure. The result of the test is written to the Summary Log.

The associated dump routine generates a dump file containing the extracted range values from the 128 reply messages, the calculated range data used as the reference data, and error flags, if any should occur. The format of this data dump is shown below:

STATUS	RECEIVED RANGE	ERROR MAP	ESTIMATED RANGE
28	0 13C		0
8	0 2235		2235
28	0 413E		413E
8	0 6237		6237
48	0 8140		8140
"	"		"
"	"		"
"	"		"

Upon initiation of the dump routine, the data is sent from the task common memory on the 3205 to the 3230 dump file and is displayed, as shown previously. If there are any error flags encountered in the error map, then the test is considered a FAILURE, otherwise, it is SUCCESSFUL. If there were no interrupts or an interrupt was missing, a message is written in the dump file as shown below:

MISSING OR NO INTERRUPT(S) AT REPLY NO: xx

where xx represents the reply number when the miss occurred.

7.11.1.3 Azimuth Bus and Logic Test.

This test verifies that the azimuth information held by the STU Transmitter can be read successfully as part of the reply message blocks by the STU Receiver. This is accomplished by programming the on-board diagnostic support logic to generate replies continuously and having the receiver detect and assemble reply block messages on these replies. The receiver interrupt control logic is enabled allowing the ISR to fetch each reply.

The PIC is programmed to generate an interrupt once every 0.1 second. After a PIC interrupt is detected the azimuth data of the next reply message block is fetched and stored. This sequence is repeated until 161 samples have been collected.

After all of the samples are collected, the average azimuth rate is calculated along with the root mean square and standard deviation of the azimuth samples. If there has been an exceeded time limit for an interrupt to occur, the validation

test terminates and a message is written in the Summary Log stating that the test failed. If the test did not operate properly in which there was no inter task communication between the PIC program and the main program, then a message is sent to the control screen as shown below:

```
ADIAG:  *** SVC 6 ERROR ON THE 3205(SENPOINT)
```

If the PIC did not get restored properly, which is necessary for other task operations, then a message is sent to the user as follows:

```
ADIAG:  *** SVC 6 ERROR ON 3205, PIC NOT RESTORED
```

Upon completion of the validation test, the statement that the test has executed is written to the Summary Log followed by the following three lines:

```
AVERAGE AZIMUTH RATE = nn.nnnnnnnnn (SECONDS)
ROOT MEAN SQUARE     = nnn.nnnnnnnnn (HEX  nnn)
STANDARD DEVIATION   = n.nnnnnnnnn (AU'S)
```

If the azimuth rate was 0 the test is labeled as failed and the message is written into the Summary Log as FAILURE and the following statement is written into the dump file:

```
AZIMUTH RATE WAS EQUAL TO ZERO
```

The associated dump routine creates a dump file in the format identical to that of the Azimuth Logic Test for the Uplink Receiver (see section 7.2.1.3). A complete listing of this file is shown in appendix B.

7.11.2 Diagnostic Routine No. 1.

The diagnostic routine No. 1 for the STU Receiver gives the user total control in programming this device. When the routine is selected, the following message appears on the control screen and prompts the user for a response:

```
        ADIAG:
        ADIAG:  ENTER ITERATION COUNT (0=CONTINUOUS)
    ADIAG>
```

The user then enters a decimal number at the control terminal. This number is a parameter used by the diagnostic routine to define the number of times any function will be executed when selected. If no value is entered, the parameter defaults to 0 which is the continuous mode. The STU Receiver diagnostic No. 1 menu then appears on the control screen as shown below:

```
        ADIAG:
        ADIAG:  *** STU RECEIVER DIAGNOSTIC #1 ***
        ADIAG:
        ADIAG:  1 - OUTPUT COMMAND
        ADIAG:  2 - STATUS
        ADIAG:  3 - INPUT DATA
        ADIAG:  4 - SHOW INTERRUPT COUNTER
        ADIAG:  5 - CLEAR INTERRUPT COUNTER
        ADIAG:  6 - EXIT DIAGNOSTIC
        ADIAG:
        ADIAG:  ENTER FUNCTION
    ADIAG>
```

From the control terminal the user can select a function by typing the number preceding the function shown on the menu and then pressing the RETURN key. These functions are:

a. OUTPUT COMMAND. This function outputs a byte command, defined by the user, to the STU Receiver board. When this function is selected a common list of commands appears on the control screen as a quick reference for the user. This list is as follows:

```
        ADIAG:
        ADIAG:  RECEIVER COMMANDS
        ADIAG:
        ADIAG:  10 - RECEIVER DIAGNOSTIC
        ADIAG:  40 - ENABLE INTERRUPTS
        ADIAG:  50 - ENABLE INTERRUPTS (DIAGNOSTIC)
        ADIAG:  E0 - DISARM, RESET
        ADIAG:
        ADIAG:  ENTER COMMAND
    ADIAG>
```

The user then enters the command in hexidecimal format at the control terminal and presses the RETURN key. The structure of the command byte is defined in appendix D.

b. STATUS. This function reads the device status byte of the STU Receiver board and displays it on the control screen as illustrated below:

```
ADIAG:  STATUS = xx
```

where "xx" represents the status byte in hexadecimal format. The structure of the status byte is defined in appendix D.

c. INPUT DATA. This function reads a 16-bit halfword from the STU Receiver. When this function is selected the following prompt is displayed:

```
ADIAG:  ENTER NUMBER OF HALFWORDS TO BE READ
```

The used then enters the number of halfwords desired in decimal and presses the RETURN key. The data is then displayed on the control screen as follows:

```
ADIAG:
ADIAG:  READ DATA = xxxx
```

where "xxxx" is a hexidecimal value.

d. SHOW INTERRUPT COUNTER - This function reads the memory location which holds the number of times the STU Receiver ISR was called and displays the count on the control screen as follows:

```
ADIAG:
ADIAG:  INTERRUPT COUNT = dddd   (HEX xxxx)
```

where "dddd" represents the count in decimal and "xxxx" represents the count in hexadecimal.

e. CLEAR INTERRUPT COUNT. This function clears the memory location which holds the number of times the STU Receiver ISR was called and then executes the SHOW INTERRUPT COUNT function displaying the following on the control screen:

```
ADIAG:
ADIAG:  INTERRUPT COUNT =    0   (HEX    0)
```

f. EXIT DIAGNOSTIC. This function returns the user to the STU Receiver Maintenance Menu and leaves the STU Receiver in its current state, i.e., if the STU Receiver is placed in a particular diagnostic mode it will remain in that mode after the user returns to the device menu.

7.12 RECEIVER ANALOG SUBSYSTEM.

The analog subsystem menu for the ARIES Receiver Analog Hardware is shown in figure 7.12-1 as it appears on the control screen. Access to this menu is through option 15 of the ARIES Maintenance Menu (refer to figure 4.2).

```
        ADIAG:
        ADIAG:  ************************************
        ADIAG:  *** RECEIVER LOOP MAINTENANCE MENU ***
        ADIAG:  ************************************
        ADIAG:  1 - VALIDATION
        ADIAG:  2 - DUMP
        ADIAG:  3 - HELP
        ADIAG:  4 - EXIT
        ADIAG:  5 - DATA BASE GENERATION
    ADIAG>
```

FIGURE 7.12-1. RECEIVER LOOP MAINTENANCE MENU SCREEN

Referring to figure 7.12-1 there are five options available on the Receiver Loop Maintenance Menu:

a. To access the Receiver Loop Validation Test Menu.

b. To access the Receiver Loop Validation Data Dump Menu.

c. To access the Receiver Loop Help Text File.

d. To return to the System Maintenance Menu.

e. To access the Data Base Generation routine.

Selecting option 1, the user is moved to a third level menu. This menu, the Receiver Loop Validation Test Menu allows the user to run any one of four validation tests separately or as a set (see section 7.12.1).

Selecting option 2, the user is also moved to a third level menu. This menu, the Receiver Loop Validation Data Dump Menu allows the user to run any one of four validation test data dumps separately or as a set (see section 7.12.1).

Selecting option 3, the Receiver Loop Help Text File is displayed on the response screen. This file provides a brief description of all the routines accessible under the Receiver Loop Maintenance Menu (refer to appendix C for the listing of this help file).

Selecting option 4, the user is returned back to the System Maintenance Menu.

Selecting option 5, moves the user to the Receiver Loop Data Base Generation Menu. This third level menu allows the user to create the interrogation data base necessary for running the validation tests. Section 7.12.2 contains a description of the use and contents of these files.

7.12.1 Validation Test and Data Dump Routines.

Access to the Receiver Loop Validation tests is through the VALIDATION option on the RECEIVER LOOP Maintenance Menu. When VALIDATION is selected, the Receiver Loop Validation Menu appears on the control screen as shown in figure 7.12.1-1.

```
        ADIAG:
        ADIAG:  *** RECEIVER LOOP VALIDATION ***
        ADIAG:  1 - DIGITAL- ATCRBS ONLY
        ADIAG:  2 - DIGITAL- ATCRBS/MODE S
        ADIAG:  3 - ANALOG - ATCRBS ONLY
        ADIAG:  4 - ANALOG - ATCRBS/MODE S
        ADIAG:  5 - EXIT
        ADIAG:  0 - ALL (DEFAULT)
    ADIAG>
```

FIGURE 7.12.1-1. RECEIVER LOOP VALIDATION TEST MENU SCREEN

Referring to figure 7.12.1-1 there are four separate validation tests. The purpose of these tests is to verify that the ARIES can receive interrogations at RF and convert the signal into digital information for subsequent detection and processing by the digital Uplink Receiver. These tests, run as a set, check the Uplink RF Receiver, the STU RF Transmitter, and the STU digital transmitter board modulation control signals. Each of these tests, along with their associated data dumps, are discussed in sections 7.12.1.1 through 7.12.1.4.

Before discussing the validation routines, a brief description of the hardware configuration involved in these tests will be given. Figure 7.12.1-2 depictes the Receiver Analog Subsystem Block diagram. As shown, the Uplink Receiver is comprised of a digital logic board and RF hardware. Similarly, the Uplink Transmitter is comprised of a digital logic board and RF hardware. This RF hardware is physically mounted on one analog panel referred to as the INTERROGATION RECEIVER & STU INTERROGATION GENERATOR panel. It is this panel that is primarily being verified running the Receiver Analog Loop Validation tests.

The digital boards mentioned above are tested through their respective device menus. Since these devices are used to test the RF logic, their respective validation tests must be successful in order for the Receiver Analog Loop tests to be successful.

7.12.1.1 ATCRBS Digital Path Test.

The ATCRBS Digital Path Test verifies the proper generation of the PAM output of the STU Transmitter digital board. This output signal drives the PAM modulator in the STU RF Transmitter. In this test, the PAM modulation pulses are fed directly to the digital Uplink Receiver board, as shown in figure 7.12.1-2, bypassing all

of the RF hardware. The purpose of this test, along with its equivalent ATCRBS Analog Path test (refer to section 7.12.1.3), is to effectively isolate PAM failures should they occur to either digital hardware or analog hardware. This test is accomplished by programming the STU Transmitter to output a series of 50 ATCRBS interrogations and programming the ARIES Uplink Receiver to receive them through a digital port. Each time an interrogation message is assembled by the receiver it is collected by the CPU, verified against an expected interrogation data reference table for correctness, and stored in a dump file along with the reference table and any errors should they occur.

The criteria for a successful validation includes an exact match of Front/Back bits, an interrogation type match for each interrogation sent by the STU Transmitter, and a range comparison with a tolerance starting at $\pm$ 2 RU's and increasing by 1 RU for every 6666_{HEX} RU increase of the TOAR count. The result of this test is written on the summary log file at its conclusion.

Figure 7.12.1.1-1 contains a brief listing of the data dump file generated by this test as it appears on the response screen. The printer display mode uses 132 characters per line allowing for single line display of each interrogation. Note that the antenna azimuth, which is in Word 2 of the received data, is not part of the test and is disregarded in the test comparisons. Refer to appendix B for the complete listing of this file.

7.12.1.2 ATCRBS/Mode S Digital Path Test.

The ATCRBS/Mode S Digital Path Test verifies the DPSK output of the STU Transmitter digital board. This output signal drives the DPSK modulator in the STU RF Transmitter. In this test both output signals (PAM and DPSK) are fed directly to the Uplink Receiver digital board bypassing all of the RF hardware. The purpose of this test, along with its equivalent ATCRBS/Mode S Analog Path Test, is to isolate DPSK failures to either digital hardware or analog hardware. This test is accomplished by programming the STU Transmitter to output

a series of 210 ATCRBS and Mode S interrogations and programming the ARIES Uplink Receiver to receive them through a digital port. Each time an interrogation message is assembled by the receiver it is collected by the CPU, verified against an expected interrogation data reference table for correctness, and stored in a dump file along with the reference table and any errors should they occur.

The criteria for a successful validation includes an exact match of Front/Back bits, an interrogation type match for each interrogation sent by the STU Transmitter, and a range comparison with a tolerance starting at $\pm$2 RU's and increasing by 1 RU for every 6666_{HEX} RU increase of the TOAR count. The result of this test is written in the Summary Log file at its conclusion.

Figure 7.12.1.2-1 contains a brief listing of the data dump file generated by this test as it appears on the response screen. The printer display mode uses 132 characters per line, allowing for single line display of each interrogation. Note that the antenna azimuth, which is in Word 2 of the received data, is not part of the test and is disregarded in the test comparisons. Refer to appendix B for the complete listing of this file.

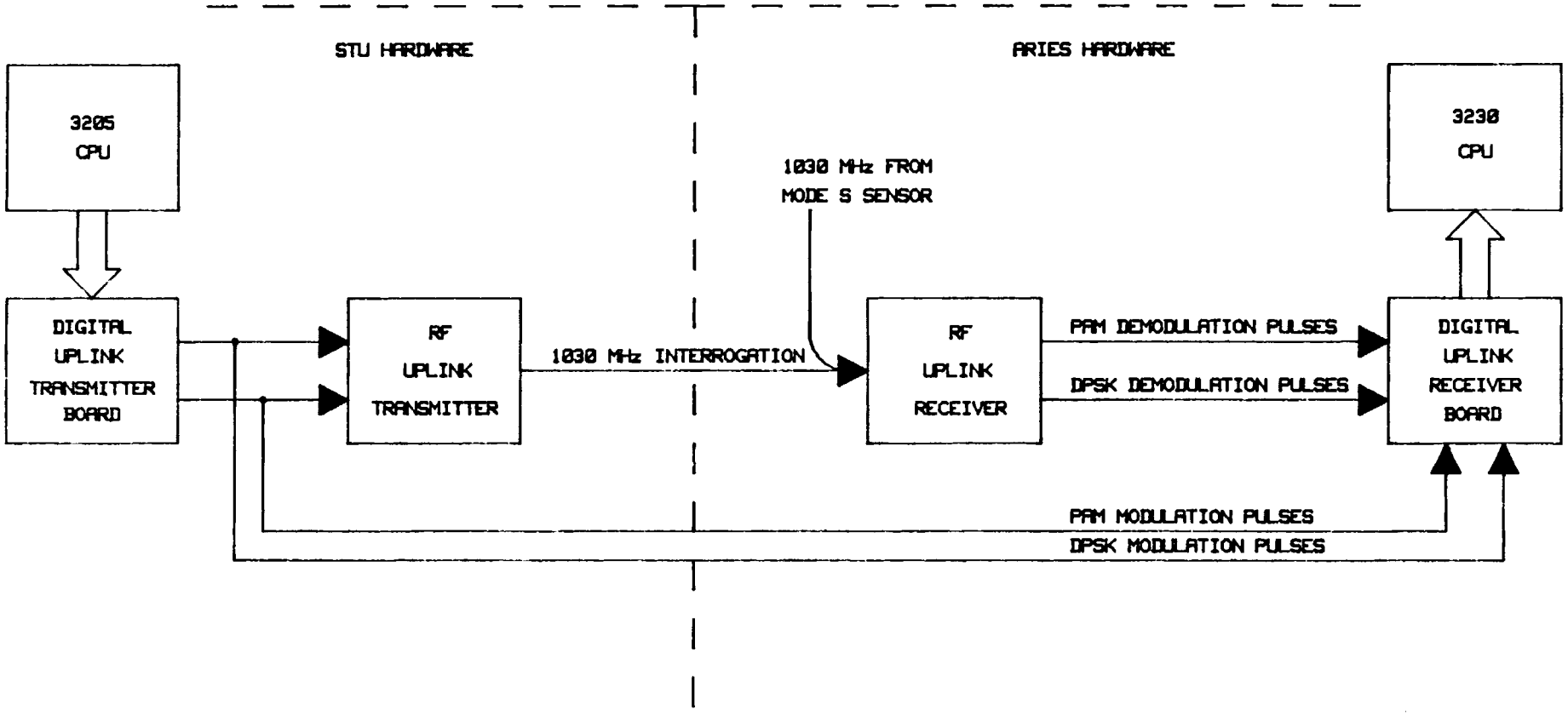

FIGURE 7.12.1-2. RECEIVER ANALOG SUBSYSTEM BLOCK DIAGRAM

		WORD 1	WORD 2	WORD 3	WORD 4	WORD 5	ERROR
1	REFERENCE-	20002C04		0	0	0	0
	RECEIVED -	20002C04	3FD10000		0	0	0
2	REFERENCE-	20002403		0	0	0	0
	RECEIVED -	20002403	3FF20000		0	0	0
3	REFERENCE-	20002C05		0	0	0	0
	RECEIVED -	20002C05		140000	0	0	0
4	REFERENCE-	20002407		0	0	0	0
	RECEIVED -	20002407		360000	0	0	0
5	REFERENCE-	20002C06		0	0	0	0
	RECEIVED -	20002C06		570000	0	0	0
6	REFERENCE-	20002401		0	0	0	0
	RECEIVED -	20002401		790000	0	0	0
7	REFERENCE-	20002C02		0	0	0	0
	RECEIVED -	20002C02		9A0000	0	0	0
8	REFERENCE-	20002404		0	0	0	0
	RECEIVED -	20002404		BC0000	0	0	0
9	REFERENCE-	20002C03		0	0	0	0
	RECEIVED -	20002C03		DD0000	0	0	0
	.	.		.	.	.	.
	.	.		.	.	.	.
	.	.		.	.	.	.

FIGURE 7.12.1.1-1. SAMPLE OF ATCRBS DIGITAL PATH TEST DATA DUMP

7.12.1.3 ATCRBS Analog Path Test.

The ATCRBS Analog Path Test verifies the capability of the Uplink Receiver to properly detect and decode ATCRBS interrogations at the RF level. Subsequently, this test also verifies that the STU Transmitter can properly assemble and transmit ATCRBS interrogations at the RF level. The interrogations generated by the STU are injected into the same RF port Mode S Sensor interrogations are injected into.

This test is identical to the ATCRBS Digital Path Test described in section 7.12.1.1, using the same test data and generating a similar data dump file. However, the test configuration now includes the RF hardware. The PAM demodulation pulse stream is fed to the Uplink Receiver digital board as shown in figure 7.12.1-2.
The criteria for a successful validation includes an exact match of Front/Back bits, an interrogation type match for each interrogation sent by the STU Transmitter, and a range comparison with a tolerance starting at ± 2 RU's and increasing by 1 RU for every 6666_{HEX} RU increase of the TOAR count. The result of this test is written in the Summary Log file at its conclusion.

		WORD 1	WORD 2	WORD 3	WORD 4	WORD 5	ERROR
1	REFERENCE-	80002C04	0	0	0	0	
	RECEIVED -	80002C04	229F0000	0	0	0	
2	REFERENCE-	2009409	A020	0	0	0	
	RECEIVED -	2009409	22A1A020	0	0	0	
3	REFERENCE-	4010C09	A810	0	0	0	
	RECEIVED -	4010C09	22A3A810	0	0	0	
4	REFERENCE-	601740A	C008	0	0	0	
	RECEIVED -	601740A	22A5C008	0	0	0	
5	REFERENCE-	801EC08	2004	0	0	0	
	RECEIVED -	801EC08	22A72004	0	0	0	
6	REFERENCE-	A025408	2802	0	0	0	
	RECEIVED -	A025408	22A92802	0	0	0	
7	REFERENCE-	C02CC09	A001	0	0	0	
	RECEIVED -	C02CC09	22ABA001	0	0	0	
8	REFERENCE-	E033409	A800	80000000	0	0	
	RECEIVED -	E033409	22ADA800	80000000	0	0	
9	REFERENCE-	1003AC0A	C000	40000000	0	0	
	RECEIVED -	1003AC0A	22AFC000	40000000	0	0	
10	REFERENCE-	12041408	2000	20000000	0	0	
	RECEIVED -	12041408	22B12000	20000000	0	0	
11	REFERENCE-	14048C08	2800	10000000	0	0	
	RECEIVED -	14048C08	22B32800	10000000	0	0	
12	REFERENCE-	1604F409	A000	8000000	0	0	
	RECEIVED -	1604F409	22B5A000	8000000	0	0	
	.	.	.	.	.	.	
	.	.	.	.	.	.	
	.	.	.	.	.	.	

FIGURE 7.12.1.2-1. SAMPLE OF ATCRBS/MODE S DIGITAL PATH TEST DATA DUMP

Figure 7.12.1.3-1 contains a brief listing of the data dump file generated by this test as it appears on the response screen. The printer display mode uses 132 characters per line allowing for single line display of each interrogation. Note that the antenna azimuth, which is in Word 2 of the received data, is not part of the test and is disregarded in the test comparisons. Also, the Front/Back bit remains selected for the front face antenna. Refer to appendix B for the complete listing of this file.

7.12.1.4 ATCRBS/Mode S Analog Path Test.

The ATCRBS/Mode S Analog Path Test verifies the capability of the Uplink Receiver to properly detect and decode Mode S interrogations at the RF level. Subsequently, this test also verifies that the STU Transmitter can properly assemble and transmit Mode S interrogations at the RF level. Again, the Mode S interrogations generated by into the STU are injected into the same port an Mode S Sensor interrogations are injected.

		WORD 1	WORD 2	WORD 3	WORD 4	WORD 5	ERROR
1	REFERENCE-	20002C04	0	0	0	0	
	RECEIVED -	20002C04	3FD10000	0	0	0	
2	REFERENCE-	20002C03	0	0	0	0	
	RECEIVED -	20002C03	3FF20000	0	0	0	
3	REFERENCE-	20002C05	0	0	0	0	
	RECEIVED -	20002C05	140000	0	0	0	
4	REFERENCE-	20002C07	0	0	0	0	
	RECEIVED -	20002C07	360000	0	0	0	
5	REFERENCE-	20002C06	0	0	0	0	
	RECEIVED -	20002C06	570000	0	0	0	
6	REFERENCE-	20002C01	0	0	0	0	
	RECEIVED -	20002C01	790000	0	0	0	
7	REFERENCE-	20002C02	0	0	0	0	
	RECEIVED -	20002C02	9A0000	0	0	0	
8	REFERENCE-	20002C04	0	0	0	0	
	RECEIVED -	20002C04	BC0000	0	0	0	
9	REFERENCE-	20002C03	0	0	0	0	
	RECEIVED -	20002C03	DD0000	0	0	0	
	.	.	.	.	.	.	
	.	.	.	.	.	.	
	.	.	.	.	.	.	

FIGURE 7.12.1.3-1. SAMPLE OF ATCRBS ANALOG PATH TEST DATA DUMP

This test is identical to the ATCRBS/Mode S Digital Path Test described in section 7.12.1.2, using the same interrogation data and generating a similar data dump file. However, this test configuration now includes the RF hardware and the PAM; the DPSK modulation pulse streams are fed to the Uplink Receiver digital board as shown in figure 7.12.1-2.

The criteria for a successful validation includes an exact match of Front/Back bits, an interrogation type match for each interrogation sent by the STU Transmitter, and a range comparison with a tolerance starting at ± 2 RU's and increasing by 1 RU for every 6666_{HEX} RU increase of the TOAR count. The result of this test is written in the Summary Log file at its conclusion.

Figure 7.12.1.4-1 contains a brief listing of the data dump file generated by this test as it appears on the response screen. The printer display mode uses 132 characters per line allowing for single line display of each interrogation. Note that the antenna azimuth, which is in Word 2 of the received data, is not part of the test and is disregarded in the test comparisons. Refer to appendix B for the complete listing of this file.

		WORD 1	WORD 2	WORD 3	WORD 4	WORD 5	ERROR
1	REFERENCE-	80002C04	0	0	0	0	
	RECEIVED -	80002C04	229F0000	0	0	0	
2	REFERENCE-	2009409	A020	0	0	0	
	RECEIVED -	2009409	22A1A020	0	0	0	
3	REFERENCE-	4010C09	A810	0	0	0	
	RECEIVED -	4010C09	22A3A810	0	0	0	
4	REFERENCE-	601740A	C008	0	0	0	
	RECEIVED -	601740A	22A5C008	0	0	0	
5	REFERENCE-	801EC08	2004	0	0	0	
	RECEIVED -	801EC08	22A72004	0	0	0	
6	REFERENCE-	A025408	2802	0	0	0	
	RECEIVED -	A025408	22A92802	0	0	0	
7	REFERENCE-	C02CC09	A001	0	0	0	
	RECEIVED -	C02CC09	22ABA001	0	0	0	
8	REFERENCE-	E033409	A800	80000000	0	0	
	RECEIVED -	E033409	22ADA800	80000000	0	0	
9	REFERENCE-	1003AC0A	C000	40000000	0	0	
	RECEIVED -	1003AC0A	22AFC000	40000000	0	0	
	.	.	.	.	.	.	
	.	.	.	.	.	.	
	.	.	.	.	.	.	

FIGURE 7.12.1.4-1. SAMPLE OF ATCRBS/MODE S ANALOG PATH TEST DATA DUMP

7.12.2 Data Base Generation Routine.

The Data Base Generation Menu allows the user to create and/or display an ATCRBS interrogation file of 50 interrogations or create and/or display an ATCRBS/Mode S interrogation file of 500 interrogations. These files are used by the Receiver Analog Loop Validation tests.

Only when the data base files containing this information is destroyed or corrupted would this option be exercised. A message stating that these data files do not exist or have been corrupted is included in the Receiver Loop data dump files. This message would also direct the user to run the Receiver Loop Data Base Generation option to recreate the files.

The Receiver Loop Data Base Generation Menu appears on the control screen as shown in figure 7.12.2-1.

At this menu, selecting option 1 moves the user to the option menu shown in figure 7.12.2-2. At this menu, the user has the option of creating the ATCRBS interrogation data base, the Mode S interrogation data base, or both of these data bases at once. Generally, the third option is chosen. The fourth option returns the user to the Data Base Generation Menu.

```
      ADIAG:
      ADIAG:  *** RECEIVER ANALOG LOOP DATA BASE GENERATION MENU ***
      ADIAG:  1 - CREATE AN INTERROGATION LIST DISC FILE
      ADIAG:  2 - DISPLAY AN INTERROGATION LIST DISC FILE
      ADIAG:  3 - HELP
      ADIAG:  4 - EXIT
  ADIAG>
```

FIGURE 7.12.2-1. RECEIVER LOOP DATA BASE GENERATION MENU SCREEN

Selecting option 2 on the Data Base Generation Menu moves the user to the option menu shown in figure 7.12.2-3. At this menu the user has the option to print either of the existing interrogation list files.

When option 1 or 2 is selected, the following message appears on the control screen:

```
     ADIAG:  Print how many lines of the file ?
ADIAG>
```

```
     ADIAG:
     ADIAG:  *** CREATE AN INTERROGATION LIST DISC FILE MENU ***
     ADIAG:  1 - CREATE AN ATCRBS INTERROGATION FILE
     ADIAG:  2 - CREATE A MODE S INTERROGATION FILE
     ADIAG:  3 - CREATE BOTH TYPES OF INTERROGATION FILES
     ADIAG:  4 - EXIT
ADIAG>
```

FIGURE 7.12.2-2. INTERROGATION DATA BASE GENERATION MENU

The answer to this prompt can be from 1 to the total number of interrogations found in the file. If the number entered is greater than the number of interrogations in the selected data base file, the complete file is printed. Selecting option 3 returns the user to the Data Base Generation Menu.

```
     ADIAG:
     ADIAG:  *** PRINT AN INTERROGATION LIST DISC FILE MENU ***
     ADIAG:  1 - PRINT AN ATCRBS INTERROGATION FILE
     ADIAG:  2 - PRINT A MODE S INTERROGATION FILE
     ADIAG:  3 - EXIT
ADIAG>
```

FIGURE 7.12.2-3. INTERROGATION DATA BASE PRINT MENU

7.12.2.1 ATCRBS Interrogation List.

In order to validate that ATCRBS interrogations are being properly received through the Uplink Receiver analog hardware, a list of 50 ATCRBS interrogations is maintained for the running of the ATCRBS Digital Path Validation Test (section 7.12.1.1) and the the ATCRBS Analog Path Validation Test (section 7.12.1.3).

All seven ATCRBS type interrogations handled by the ARIES are generated for loading into the STU. Figure 7.12.2.1-1 shows a list of these interrogations.

These seven types of interrogations are cyclically repeated until the 50-interrogation limit is reached. These interrogations are sent out at 20,000 RU's with the Front/Back bit toggled each interrogation. Under the digital test the toggle bit is checked. Under the analog test the toggle bit has no function.

INTERROGATION TYPE FIELD for

INTERROGATION	STU TRANSMITTER	ARIES RECEIVER
1. ATCRBS MODE A	0	2
2. MODE A/MODE S ALL-CALL	1	4
3. MODE A ONLY ALL-CALL	2	3
4. ATCRBS MODE C	3	5
5. MODE C/MODE S ALL-CALL	4	7
6. MODE C ONLY ALL-CALL	5	6
7. ATCRBS MODE 2	6	1

FIGURE 7.12.2.1-1. ATCRBS INTERROGATION TYPES

7.12.2.2 ATCRBS/Mode S Interrogation List.

In order to validate that ATCRBS and Mode S interrogations are being properly received by the analog Uplink Receiver, a list of 500 mixed ATCRBS and Mode S

interrogations is maintained for the running of the ATCRBS/Mode S Digital Path Validation Test (section 7.12.1.2) and the ATCRBS/Mode S Analog Path Validation Test (section 7.12.1.4).

The list of interrogation blocks generated starts off with an ATCRBS interrogation followed by a series of Mode S interrogations. The time of transmission of the ATCRBS type is set at 10,000 RU's relative to the start of the Maximum Range period set at 80,000 RU's. The time of transmission for the Mode S interrogations is scheduled in increments of 2,007 RU's relative to the ATCRBS interrogation until the Maximum Range period is reached. At this point the cycle repeats itself (ATCRBS followed by a series of Mode S) until 500 interrogation blocks are generated.

The ATCRBS interrogation cycles through the seven ATCRBS types handled by the ARIES system shown in figure 7.12.2.1-1. Likewise, the Mode S interrogation cycles through each of the five Mode S types handled by the ARIES system shown in figure 7.12.2.2-1.

The pattern that is generated looks like:

0 - 8 - 8 - 9 - 9 - A - 8 - 8 - 9 - 9 - A - 8 - ... - 1 - ... - 2 - ...

The final information generated is the Mode S data fields. The data field starts off with the most significant bit (MSB) set high with all other bits set low. The next data field would then include a single set bit in the next less significant bit (LSB) position. The effect of this would be a set bit moving from the MSB to the LSB in the data field. After the LSB is set high, the sequence is reversed with the set bit moving from the LSB to the MSB.

	INTERROGATION TYPE FIELD for		
INTERROGATION	UPLINK FIELD	STU TRANSMITTER	ARIES RECEIVER
1. SURVEILLANCE, ALTITUDE REQUEST	4	8	8
2. SURVEILLANCE, IDENTITY REQUEST	5	8	8
3. COMM A, ALTITUDE REQUEST	20	9	12
4. COMM A, IDENTITY REQUEST	21	9	12
5. COMM C	24	10	12

FIGURE 7.12.2.2-1. MODE S INTERROGATION TYPES

After the running 1's in a field of 0's is completed, a similar sequence is used to run a 0 through a field of 1's. The whole sequence of running 1's and 0's is repeated until the 500 data fields are generated. Note that the algorithm to insert the 1's and 0's in the Mode S data fields does not distinguish between ATCRBS, Mode S Short, and Mode S Long interrogations. The data field that corresponds to an ATCRBS interrogation block, i.e. the very first interrogation block, is simply skipped over and the next data field is used for the following Mode S interrogation.

7.13 MRG ANALOG SUBSYSTEM.

The analog subsystem menu for the ARIES MRG is shown in figure 7.13-1 as it appears on the control screen. This menu can be accessed through the selection of option 16 on the ARIES Maintenance Menu (refer to figure 4-2).

```
        ADIAG:
        ADIAG:  ********************************
        ADIAG:  ****   MRG ANALOG LOOP MENU   ****
        ADIAG:  ********************************
        ADIAG:  1 - VALIDATION
        ADIAG:  2 - DUMP
        ADIAG:  3 - HELP
        ADIAG:  4 - EXIT
        ADIAG:  5 - DIAGNOSTIC
    ADIAG>
```

FIGURE 7.13-1. MRG ANALOG SUBSYSTEM OPTION SCREEN

Referring to figure 7.13-1 there are five possible options available on the MRG Loop Maintenance Menu. These options are the following:

a. To access the MRG Loop Validation Test Menu.

b. To access the MRG Loop Validation Data Dump Menu.

c. To access the MRG Loop Help Text File.

d. To return to the System Maintenance Menu.

e. To access the MRG Loop Diagnostic Routine.

Selecting options 1 or 2 moves the user to a third level menu, the Validation Test Menu or the Validation Data Dump Menu, respectively. The routines available on these menus are discussed in section 7.13.1.

Selecting option 3, the MRG Loop Help Text File is displayed on the response screen. This file provides the user with a brief description of all the routines accessible under the MRG Loop Menu (refer to appendix C for the listing of this help file).

Option 4 returns the user back to the System Maintenance Menu.

Selecting option 5 moves the user to the MRG Loop Diagnostic Routine. The functions available in this routine are discussed in section 7.13.2.

These MRG Analog Subsystem tests, as well as the diagnostic routine, are used to verify the hardware path between the MRG digital hardware and the STU Downlink Receiver digital hardware. This path consists of the SUM, DELTA, and OMNI channels of the three IF Modeled Reply Generators (each digital reply generator has a corresponding IF reply generator) which feed replies to an IF Combiner according to parameter information (power, monopulse, left/right of boresight, and data) received from their respective digital hardware. The output of the IF Combiner is fed to an IF/RF Upconvertor to generate replies at 1090 MHz. Under normal operation the output of the IF/RF Upconvertor would be connected to the Mode S Sensor but for the MRG Analog Subsystem tests, as well as the FRG Analog Subsystem tests, the replies are returned through a channel selector to the STU portion of the analog subsystem. In this portion of the analog subsystem, replies are fed through an RF/IF Downconvertor to generate replies at 60 MHz, which, in turn, are fed through a log video amplifier to be processed by the Video Pulse Quantizer (VPQ) board where the STU Downlink Receiver digital board collects the reply data and transmitted power level on the SUM, DELTA, and OMNI channels (which are sampled by analog-to-digital converters (ADC) located on the VPQ board).

7.13.1 Validation Test and Data Dump Routines.

Access to the MRG Loop Validation Tests is through the VALIDATION option on the MRG Loop Maintenance Menu (figure 7.13-1). When the VALIDATION option is selected, the MRG Loop Validation Menu appears on the control screen as shown in figure 7.13.1-1.

```
        ADIAG:
        ADIAG:  ***   MRG ANALOG LOOP VALIDATION   ***
        ADIAG:  1 - REPLY MONOPULSE TEST
        ADIAG:  2 - REPLY POWER TEST
        ADIAG:  3 - REPLY CODE TEST
        ADIAG:  4 - EXIT
        ADIAG:  0 - ALL (DEFAULT)
    ADIAG>
```

FIGURE 7.13.1-1. MRG ANALOG LOOP VALIDATION TEST MENU SCREEN

Referring to figure 7.13.1-1 there are three separate validation tests for the MRG Analog Subsystem which may be run individually or as a set. The three tests are as follows:

a. Reply Monopulse Test.

b. Reply Power Test.

c. Reply Code Test.

While running any of these validations or validation dumps, one of the following message formats will appear at the bottom of the control screen indicating that a test or data transfer is in progress. For example, if a validation test is being executed then the following message appears:

```
ADIAG:
ADIAG:  Please wait -- MRG Loop:  xxxxx Test
ADIAG:  in progress...
ADIAG:  ....
ADIAG:
```

The dots in the fourth line signify that the test is running and the number of dots will increase until the test is completed as indicated by the message:

```
ADIAG:
ADIAG:  Please wait -- MRG Loop:  xxxxx Test
ADIAG:  in progress...
ADIAG:  ...execution completed.
ADIAG:
```

The xxxxx indicates which test is being executed. Similarly, for the validation dump routines the following message appears at the bottom of the control screen:

```
ADIAG:
ADIAG:  Please wait -- MRG Loop:  xxxxx Test
ADIAG:  data transfer in progress...
ADIAG:  ....
ADIAG:
```

The dots in the fourth line signify that the data transfer is in progress (between the STU CPU and the ARIES CPU) and the number of dots will increase until the data transfer is completed as indicated by the message:

```
ADIAG:
ADIAG:  Please wait -- MRG Loop:  xxxxx Test
ADIAG:  data transfer in progress...
ADIAG:  ...data transfer completed.
ADIAG:
```

The three MRG Loop tests mentioned above, along with their associated data dumps, are discussed in further detail in sections 7.13.1.1 through 7.13.1.3.

7.13.1.1 Reply Monopulse Test.

The Reply Monopulse Test exercises the monopulse attenuators on each of the three MRG IF Reply Generators. This is done by keeping the 6-bit power attenuation field of the output data block messages constant and varying the 8-bit monopulse field from X'00' through X'7F' and X'C0' through X'E8'. Corresponding power levels read from the STU should reflect a constant SUM reading of 0 dBm and the DELTA reading should decrement 0.25 dBm, starting at 6 dBm, for each increment of the LSB in the 8-bit monopulse field mentioned above. In addition, as the attenuation is increased, the left/right of boresight bit is toggled back and forth for each successive attenuation level. The actual left/right of boresight bit operation is tested at a static power level in the beginning of the test.

The criteria for a successful validation test requires that the SUM values remain within ±0.75 dBm of its constant value of 0 dBm and that the DELTA values be within ±0.75 dBm of its expected value, which would be 6 dBm minus the INDEX value times 0.25 dBm. The ±0.75 dBm DELTA tolerance gradually increases to ±5.4 dBm at 35 dBm monopulse attenuation to accomodate a slight drift in power levels on either side of boresight at the higher attenuation levels.

Figure 7.13.1.1-1 contains a brief listing of the data dump format expected by this test in the printer or console display mode. The CNT field indicates the number of valid replies received by the STU for each monopulse attenuation level; there is a maximum of three replies sent at each level. Error flags, should they exist, are displayed as ** to the left of values in the SUM and DELTA columns.

It should be noted that the data displayed are relative values and are scaled by an autocalibration routine each time the test is run. If the absolute power readings read during the autocalibration mode are below a predefined level, a message will be displayed at the top of the data dump with the following format:

LOW POWER READINGS ON MRG #n

where n is the Reply Generator. If two generators are below this level, then the message will be repeated for both reply generators. If all three Reply Generators are below this level then the rest of the test is aborted and the following is displayed in the dump file:

```
LOW POWER READINGS DETECTED ON ALL THREE MRG's

MAXIMUM SUM READINGS:

     MRG#1 = XXXX
     MRG#2 = XXXX
     MRG#3 = XXXX

MAXIMUM DELTA READINGS:


     MRG#1 = XXXX
     MRG#2 = XXXX
     MRG#3 = XXXX
```

The rest of the data output will be omitted since the test was aborted after autocalibration. If the left/right of boresight bit is operating incorrectly on any of the Reply Generators, a message will appear above the data dump with the following format:

x LEFT/RIGHT PHASE BIT ERROR(S) DETECTED ON MRG #n

where n is the Reply Generator, and x is the either a 1 or 2 to indicated the possible cause of the error. If only one error is detected, then only one side of boresight is being detected. If two errors are detected, then there is a possiblity that left/right of boresight is reversed. Refer to appendix B for the complete listing of the output file.

	MRG #1			MRG #2			MRG #3		
INDEX	SUM	DELTA	CNT	SUM	DELTA	CNT	SUM	DELTA	CNT
0	0.0	5.9	3	0.1	6.0	3	0.0	5.9	3
1	0.1	5.7	3	0.1	5.8	3	0.1	5.7	3
2	0.0	5.5	3	0.0	5.4	3	-0.1	5.5	3
3	0.1	5.3	3	0.1	5.2	3	0.0	5.2	3
4	0.0	5.0	3	0.0	4.9	3	0.1	5.0	3
.	.	.	.	.	.	.	.	.	.
.	.	.	.	.	.	.	.	.	.
.	.	.	.	.	.	.	.	.	.

FIGURE 7.13.1.1-1. SAMPLE OF MRG REPLY MONOPULSE TEST DATA DUMP

7.13.1.2 Reply Power Test.

The Reply Power Test exercises the power attenuators on each of the three MRG IF Reply Generators. This is done by keeping the 8-bit monopulse field of the output data block messages constant and varying the 6-bit power attenuation field from X'00' through X'2D' for Mainbeam power and X'00' through X'0F' for Sidelobe power. Corresponding power levels read from the STU RCVR should reflect an initial SUM reading of 10 dBm for Mainbeam power (-10 dBm for Sidelobe power), with a DELTA reading of 16 dBm (-6 dBm for Sidelobe) and an OMNI reading of -6 dBm (same for Sidelobe). For each 1-bit increment of the power attenuation field, a 1 dBm decrement should be registered in the SUM power reading. The DELTA reading should track the SUM reading with a +6 dBm difference and the OMNI reading should track the SUM reading with an approximate -16 dBm difference.

Within a predetermined upper and lower threshold limit, the criteria for a successful validation test requires that the SUM values be within ±0.75 dBm of its expected value and the DELTA and OMNI values be within ±0.75 dBm of their expected values; which again, the DELTA values should be 6 dBm above the SUM and the OMNI

should be approximately 16 dBm below the SUM. The SUM-OMNI difference is actually an average difference compiled for each Reply Generator. In addition, the SUM values for each of the three Reply Generators should all be within 1.0 dBm of each other at each attenuation level; otherwise a tracking error will occur. Figure 7.13.1.2-1 contains a brief listing of the data dump format expected by this test in the printer mode. The CNT field indicates the number of valid replies received by the STU for each power attenuation level; there is a maximum of three replies sent at each level. There are two passes made at each attenuation level, once for the SUM and DELTA readings and secondly for the OMNI reading. Error flags, should they exist, are displayed as ** to the left of values in the SUM, DELTA, and OMNI columns; tracking error flags are displayed as <*** in the TRACKING FLAG column. Error checking is not performed on values above the upper thresold level or below the lower threshold levels. These thresholds are in place because of nonlinear power levels at low attenuation settings due to compression and dropouts at the higher attenuation settings.

Again, it should be noted that the data displayed are relative values and are scaled by an autocalibration routine each time the test is run. If the absolute power readings read during the autocalibration mode are below a predefined level, a message will be displayed at the top of the data dump in the following format:

LOW POWER READINGS ON MRG #n

where n is the reply generator.

MAINBEAM POWER READINGS (in dBm):

	M R G # 1					M R G # 2			...	TRACKING
ATTEN	SUM	DELTA	CNT	OMNI	CNT	SUM	DELTA	CNT	...	FLAG
.	.	.	.	.	.	.	.	.	...	
.	.	.	.	.	.	.	.	.	...	
9	1.3	6.9	3	-14.9	3	0.9	7.0	3	...	
---	---	---	---	---	---	---	---	---	...	-> UPPER THRESHOLD
10	0.0	6.1	3	-16.2	3	-0.1	5.9	3	...	
11	-1.0	5.1	3	-17.1	3	-1.1	4.8	3	...	
12	-2.0	4.0	3	-18.0	3	-2.2	3.9	3	...	
13	-2.9	3.1	3	-18.9	3	-3.1	3.0	3	...	
14	-3.9	1.9	3	-20.0	3	-4.0	1.9	3	...	
.	.	.	.	.	.	.	.	.	...	
.	.	.	.	.	.	.	.	.	...	

FIGURE 7.13.1.2-1. SAMPLE OF MRG REPLY POWER TEST DATA DUMP

If two generators are below this level, then the message will be repeated for both Reply Generators. If all three Reply Generators are below this level then the rest of the test is aborted and the following is displayed in the dump file:

LOW POWER READINGS DETECTED ON ALL THREE MRG's

MAXIMUM SUM READINGS:

MRG#1 = XXXX
MRG#2 = XXXX
MRG#3 = XXXX

MAXIMUM DELTA READINGS:

MRG#1 = XXXX
MRG#2 = XXXX
MRG#3 = XXXX

MAXIMUM OMNI READINGS:

MRG#1 = XXXX
MRG#2 = XXXX
MRG#3 = XXXX

The rest of the data output will be omitted since the test was aborted after autocalibration.

The summary section at the bottom of the data dump contains information compiled from the data presented before it and is used as an overview and in the case of the SUM-OMNI difference it is used as a pass criteria. The MAINBEAM/SIDELOBE BIAS is calculated during autocalibration by determining the difference of the SUM power, at a given attenuation level, between mainbeam and sidelobe. SUM-DELTA and SUM-OMNI DIFFERENCES are an average of the respective power field differences for both mainbeam and sidelobe power readings within the valid threshold levels. The AUTOCALIBRATION SCALING values are determined during autocalibration and reflect the number of bits of attenuation needed to drop the respective power field 1 dBm. Refer to appendix B for the complete listing of the output file.

7.13.1.3 Reply Code Test.

The Reply Code Test exercises the data content of the three different reply messages; ATCRBS replies and Long and Short Mode S replies. In this test the power and monopulse attenuation levels are kept at zero (maximum power) and the contents of the identity codes and message fields are varied. Data patterns sent consist of fields of all 0's, F's, 5's, and A's followed by two varying sequences called "running 1" and "running 0". A running 1 starts with a reply that has a 1 in the MSB of the field and 0's in all other bits. With each subsequent reply the 1 is shifted one bit toward the LSB. Similarly, the running 0 is the compliment of the running 1. Superimposed over all of these patterns is either a Downlink Format (DF) field for the Mode S replies or the reply brackets for the ATCRBS replies (X'8002'). The replies received by the STU RCVR are stored and checked

CODE TEST DATA: ATCRBS REPLIES

MRG#1	FLG	MRG#2	FLG	MRG#3	FLG	REF.
8002		8002		8002		8002
D557		D557		D557		D557
AAAA		AAAA		AAAA		AAAA
FFFF		FFFF		FFFF		FFFF
8002		8002		8002		8002
C002		C002		C002		C002
'		'		'		'
'		'		'		'

CODE TEST DATA: MODE S SHORT REPLIES

M R G # 1					M R G # 2					'''	R E F E R E N C E			
WD1	WD2	WD3	WD4	FLG	WD1	WD2	WD3	WD4	FLG	'''	WD1	WD2	WD3	WD4
20	0	0	0		20	0	0	0		'''	20	0	0	0
2D	5555	5555	5555		2D	5555	5555	5555		'''	2D	5555	5555	5555
5A	AAAA	AAAA	AAAA		5A	AAAA	AAAA	AAAA		'''	5A	AAAA	AAAA	AAAA
27	FFFF	FFFF	FFFF		27	FFFF	FFFF	FFFF		'''	27	FFFF	FFFF	FFFF
'	'	'	'		'	'	'	'		'''	'	'	'	'
28	1	0	0		28	1	0	0		'''	28	1	0	0
58	0	8000	0		58	0	8000	0		'''	58	0	8000	0
20	0	4000	0		20	0	4000	0		'''	20	0	4000	0
'	'	'	'		'	'	'	'		'''	'	'	'	'
2F	FFFF	FF7F	FFFF		2F	FFFF	FF7F	FFFF		'''	2F	FFFF	FF7F	FFFF
5F	FFFF	FFBF	FFFF		5F	FFFF	FFBF	FFFF		'''	5F	FFFF	FFBF	FFFF
'	'	'	'		'	'	'	'		'''	'	'	'	'
'	'	'	'		'	'	'	'		'''	'	'	'	'

CODE TEST DATA: MODE S LONG REPLIES

	WD1	WD2	WD3	WD4	WD5	'''		WD1	WD2	WD3	WD4	'''
MRG#1:	A000	0	0	0	0	'''	REF:	A000	0	0	0	'''
MRG#2:	A000	0	0	0	0	'''						
MRG#3:	A000	0	0	0	0	'''						
MRG#1:	A055	5555	5555	5555	5555	'''	REF:	A055	5555	5555	5555	'''
MRG#2:	A055	5555	5555	5555	5555	'''						
MRG#3:	A055	5555	5555	5555	5555	'''						
MRG#1:	A2AA	AAAA	AAAA	AAAA	AAAA	'''	REF:	A2AA	AAAA	AAAA	AAAA	'''
MRG#2:	A2AA	AAAA	AAAA	AAAA	AAAA	'''						
MRG#3:	A2AA	AAAA	AAAA	AAAA	AAAA	'''						
MRG#1:	AFFF	FFFF	FFFF	FFFF	FFFF	'''	REF:	AFFF	FFFF	FFFF	FFFF	'''
MRG#2:	AFFF	FFFF	FFFF	FFFF	FFFF	'''						
MRG#3:	AFFF	FFFF	FFFF	FFFF	FFFF	'''						
'	'	'	'	'	'	'''		'	'	'	'	'''
'	'	'	'	'	'	'''		'	'	'	'	'''

FIGURE 7.13.1.3-1. SAMPLE OF MRG REPLY CODE TEST DATA DUMP

against a reference table for errors. If a mismatch occurs the reply message is transmitted again, up to 3 times per reply message and up to a maximum of 5 retries per validation run. If a mismatch still exists after the retries, the incorrect reply message is flagged with an ** and the test result is FAILURE. Figure 7.13.1.3-1 contains a brief listing of each of the three different types of reply code tests in the printer display mode. Refer to appendix B for the complete listing of the output file.

7.13.2 Diagnostic Routine.

The MRG Analog Subsystem Diagnostic routine is a semiautomated debugging tool used to track down problems within the MRG Analog subsystem. This routine is similar to the Output Reply (RF TEST) of the MRG Diagnostic No. 2 routine described in section 7.3.2.2, except this routine is run with an active STU Downlink Receiver to receive the replies being sent through the analog subsystem. These replies are then read from the STU Downlink Receiver by the STU CPU and sent back to the ARIES CPU, if requested.
Upon selecting this routine on the MRG Analog Loop Menu, the message shown below will appear on the control screen.

```
        ADIAG:
        ADIAG:  EXECUTION OF THIS ROUTINE WILL CAUSE THE TCOM SPACE
        ADIAG:  USED BY THE MRG LOOP CODE TEST TO BE OVERWRITTEN,
        ADIAG:  i.e. PREVIOUSLY COLLECTED DATA WILL BE CORRUPTED!!!
        ADIAG:
        ADIAG:  DO YOU WISH TO CONTINUE? ([Y]/N)
    ADIAG>
```

This message is warning the user that if the MRG Analog Subsystem Code Test was run previously and a data dump was not performed, then the data collected will be over written by the diagnostic routine. The user then has the option of continuing or returning to the MRG Analog Loop Menu.

If the user choices to continue, the following query appears on the control screen:

```
        ADIAG:  ENTER THE NUMBER OF ITERATIONS (0 = CONTINUOUS)
    ADIAG>
```

The user then enters a decimal number at the control terminal. This number is used by the diagnostic routine to define the number of times the function will be executed once the required information has been collected. If no value is entered the parameter defaults to 0 which is the continuous mode.

Next the user is to respond to the query:

```
            ADIAG:  SELECT REPLY GENERATOR ([1],2,OR 3)
        ADIAG>
```

The default response to this query is Modeled Reply Generator 1, as indicated by the brackets in the query. The user response to this prompt will determine the Modeled Reply Generator that will be exercised.

The next query which requires a user response is:

```
ADIAG:  SELECT CW STATE(Y OR [N])
ADIAG>
```

This prompt gives the user the option of turning the PAM modulation on continuously.

The next query to which the user must respond is:

```
ADIAG:  ATCRBS OR MODE S ([A]/M)?
ADIAG>
```

The response to this query will determine if the prompt;

```
ADIAG:  ENTER ATCRBS REPLY MESSAGE
ADIAG:  FORMAT:> XXXX XXXX XXXX XXXX <CR>
ADIAG:  DEFAULT  0020 0021 0000 FFFF
ADIAG>
```

or,

```
ADIAG:  ENTER MODE S REPLY MESSAGE (1ST 4 HALFWORDS)
ADIAG:  FORMAT:> XXXX XXXX XXXX XXXX <CR>
ADIAG:  DEFAULT  0020 0028 0000 A801
ADIAG>

ADIAG:  ENTER MODE S REPLY MESSAGE (LAST 6 HALFWORDS)
ADIAG:  FORMAT:> XXXX XXXX XXXX XXXX XXXX XXXX <CR>
ADIAG:  DEFAULT  2345 6789 ABCD EFFF 0F0F 00FF
ADIAG>
```

is displayed on the control screen. The user then enters a specific type of reply message or selects the default reply message by just pressing the RETURN key. Once the reply message is selected, the user is prompted with the following two queries:

```
ADIAG:  DO YOU WANT DATA COLLECTED IN BLOCKS(640 SAMPLES)? (Y/[N])
ADIAG>
```

```
     ADIAG:  DATA DUMP ON:  CONSOLE, PRINTER, BOTH OR NULL?(C/P/B/[N])
ADIAG>
```

The first option allows the user to collect a block of 640 replies by the STU before transmitting the data back to the ARIES; allowing data to be collected at a higher rate without the delay of transmitting the data across the Communications Link between each reply. If the user selects Y for the first query and does not select N for the second, then 640 replies are sent from the ARIES through the MRG analog subsystem to the STU for collection. After the 640th reply is received by the STU, the STU will transmit all 640 replies back to ARIES for display on the response screen and/or the printer. If N is selected in the first query, then after each reply is received by the STU, the reply block is sent back to the ARIES for display. If the user selects N for the second query, then no data is sent back to the ARIES. This option sends replies through the analog subsystem at a very high rate.

Once the user selects how the data is to be collected, the routine begins sending replies. If data is selected to be displayed, then each reply transmitted is displayed on the response screen as it was received by the STU. If the printer is selected, then data will be printed either after a full block of 640 replies is collected or the diagnostic is stopped. (This is due to the printer being accessed through the spooler.) The following is a sample of the data displayed on the response screen;

```
aaaaaaaa:  bbbbbbbb ssss -->   ddd  xxx1 xxx2 xxx3
xxx4 xxx5 xxx6 xxx7 xxx8 xxx9 xx10 xx11 xx12 xx13
```

where the fields are defined as follows:

a. aaaaaaaa - interrupt count expected by the ARIES (in decimal).

b. bbbbbbbb - interrupt count at the STU (in decimal).

c. ssss - STU Receiver status word (2-byte hexadecimal).

d. ddd - will be DEL if the delta is selected or OMN for omni.

e. xxx1 through xx13 - STU Receiver data block message.

The format of the message fields is defined in appendix D.

Selection of the CONTINUOUS mode, as described above, will cause the initiation of the sub-task CHGREPLY. This task is resident in memory and is used to change the content of the reply messages being sent out by the reply generator. Figure 7.13.2.2-1 shows a sample menu format of options used in this diagnostic under CHGREPLY.

Referring to Figure 7.13.2.2-1 there are seven options listed plus the three at the bottom of the menu. The following is a description of each option from this menu:

a. Reply Time. This function allows the user to change the Reply Time field of the current message, which corresponds to the first 20 bits of the Reply Message. The IIII field depicts the integer value of this field and XXXXX is the hexadecimal representation, where the least significant bit represents 62.5 nanoseconds. If the user selects this function the following prompt will appear on the control screen:

```
    CHGREPLY:  Enter reply time (in 20-bit Hex field:  XXXXX)
CHGREPLY>
```

```
    CHGREPLY:
    CHGREPLY:  DIAGNOSTICS IN CONTINUOUS MODE
    CHGREPLY:
    CHGREPLY:  Added delay between replies:  1 millisecond(s)
    CHGREPLY:
    CHGREPLY:CURRENT REPLY MESSAGE:  XXXX XXXX XXXX XXXX
    CHGREPLY:
    CHGREPLY:  1 - Reply Time = IIII (XXXXX, 20-bit Hex field)
    CHGREPLY:  2 - Mainbeam/Sidelobe = X  (1-bit hex field)
    CHGREPLY:  3 - Type = X  (4-bit hex field)
    CHGREPLY:  4 - Power (Attenuation) = II dBm (XX, 6-bit field)
    CHGREPLY:  5 - Left/Right Boresight = X  (1-bit hex field)
    CHGREPLY:  6 - Monopulse setting = XX  (8-bit hex field)
    CHGREPLY:  7 - ATCRBS Code = XXXX  (2-byte Hex field)
    CHGREPLY:
    CHGREPLY:  DELTA being read by STU
    CHGREPLY:
    CHGREPLY:  ('A' to change message; 'D' to change delay)
    CHGREPLY:  ('F' to toggle delta/omni reading on STU)
    CHGREPLY:  Enter no. to change or 'E' to exit
CHGREPLY>
```

FIGURE 7.13.2.2-1. SAMPLE FORMAT OF MRG CHGREPLY OPTION MENU

The user then enters the Reply Time desired in hexadecimal format.

b. Mainbeam/Sidelobe. This function allows the user to select mainbeam or sidelobe power field, which corresponds to bit 10 in the second word of the reply (bit 0 is the MSB and bit 15 is the LSB in each word). The X field depicts the current value of the 1-bit field, where a 1 would signify mainbeam and a 0 would signify sidelobe. If the user selects this function the following prompt will appear on the control screen:

```
CHGREPLY:  Enter Mainbeam(1)/Sidelobe(0)
CHGREPLY>
```

The user then enters either a 1 or a 0.

c. Type. This function allows the user to change the type field of the current reply message which corresponds to the least significant nibble of the second word. The X field signifies the current reply message type. If the user selects this function the following prompt appears on the control screen:

```
CHGREPLY:  Enter Type field (1, 2, 4, or 8)
CHGREPLY>
```

The user then enters one of the four type codes, where the following describes each of the types:

1 = Nondiscrete Reply (ATCRBS)

2 = Mode S All-Call Reply

4 = Mode S Surveillance Reply

8 = Mode S Comm-B Reply

d. Power (Attenuation). This function allows the user to change the power attenuation field of the current reply message. The II field depicts the integer value of this field and XX is the hexadecimal value. The 6-bit power attenuation field, located in the upper byte of the third word, has a range from 0 to 63 dBm. If the user selects this function the following prompt appears on the control screen:

```
CHGREPLY:  Enter Power field (in decimal:  0-63 dBm)
CHGREPLY>
```

The user then enters the desired power attenuation level in decimal format.

e. Left/Right Boresight. This function allows the user to select left or right of boresight field, which corresponds to bit 7 in the third word of the reply. The X field depicts the current value of the 1-bit field, where a 1 would signify left of boresight and a 0 would signify right of boresight. If the user selects this function the following prompt appears on the control screen:

```
CHGREPLY:  Enter Left(1)/Right(0) of Boresight
CHGREPLY>
```

The user then enters either a 1 or a 0.

f. Monopulse setting. This function allows the user to change the monopulse field of the current reply message. The XX field depicts the 8-bit hexadecimal value of this field located in the lower byte of the third word. If the user selects this function the following prompt appears on the control screen:

```
    CHGREPLY:  Enter Monopulse field (8-bit Hex field:  XX)
CHGREPLY>
```

The user then enters the desired monopulse setting in hexadecimal format.

g. ATCRBS Code. This function allows the user to change the ATCRBS code within the reply message. This 2-byte hexadecimal field, depicted by XXXX, corresponds to the fourth word of the reply. Selection of this function causes the following prompt to appear on the control screen:

```
    CHGREPLY:  Enter ATCRBS Code (2-byte hex field -> XXXX)
CHGREPLY>
```

The user then enters the 2-byte field in hexadecimal format.

h. Mode S Data. This function allows the user to change the Mode S data within the reply message. This 14-byte hexadecimal field, depicted by the seven XXXX fields, corresponds to the fourth through tenth words of the reply. Selection of this function causes the following prompt to appear on the control screen:

```
        CHGREPLY:  Enter Mode S data - words 4-10
        CHGREPLY:  XXXX XXXX XXXX XXXX XXXX XXXX XXXX
    CHGREPLY>
```

The user then enters the seven 2-byte fields (XXXX) in hexadecimal format.

i. "A" to change message. This function allows the user to change the entire message at once. If this function is selected and the message type corresponds to ATCRBS, then the following prompt appears on the control screen:

```
            CHGREPLY:  Enter Reply Message
            CHGREPLY:  XXXX XXXX XXXX XXXX
        CHGREPLY>
```

The user then enters the four 2-byte fields (XXXX) in hexadecimal format. If this function is selected and the message type corresponds to a Mode S type, then the following prompt appears on the control screen:

```
    CHGREPLY:  Enter Reply Message
    CHGREPLY:  XXXX XXXX XXXX XXXX XXXX XXXX XXXX XXXX XXXX XXXX
CHGREPLY>
```

The user then enters the ten 2-byte fields (XXXX) in hexadecimal format.

j. "D" to change delay. This function allows the user to change the software delay added between each reply sent out. If the user selects this function then the following prompt appears on the control screen:

```
    CHGREPLY:  Enter delay
CHGREPLY>
```

```
    CHGREPLY:  Enter time unit:
    CHGREPLY:  1 - millisecond
    CHGREPLY:  2 - second
    CHGREPLY:  3 - minute
CHGREPLY>
```

The user first enters the number of units of delay desired followed by the type of unit. If the user enters 0 for the delay then the second prompt is omitted and no delay is added between replies.

k. "F" to toggle delta/omni reading on STU. This function selects whether delta or omni power is being sampled by the STU. The setting of this toggle function is displayed on the CHGREPLY menu as shown in figure 7.13.2.2-1.

l. "E" to exit. This function returns the user back to the MRG Analog Loop Menu. The test concludes with the following message on the control screen signifying the termination of the CHGREPLY routine:

```
CHGREPLY:  END OF TASK    0
```

At this point the processing is completed for the MRG Analog Loop Diagnostic routine and the following message appears on the response terminal before the user is returned to the MRG Analog Loop Menu:

MRG ANALOG LOOP (RF) DIAGNOSTIC COMPLETED

7.14 FRG ANALOG SUBSYSTEM.

The analog subsystem menu for the ARIES Fruit Reply Generator is shown in figure 7.14-1 as it appears on the control screen. This menu can be accessed through the selection of option 17 of the ARIES Maintenance Menu (figure 4-2).

```
        ADIAG:
        ADIAG:  ********************************
        ADIAG:  ****   FRG ANALOG LOOP MENU  ****
        ADIAG:  ********************************
        ADIAG:  1 - VALIDATION
        ADIAG:  2 - DUMP
        ADIAG:  3 - HELP
        ADIAG:  4 - EXIT
        ADIAG:  5 - DIAGNOSTIC
ADIAG>
```

FIGURE 7.14-1. FRG ANALOG SUBSYSTEM OPTION SCREEN

Referring to Figure 7.14-1 there are four possible options available on the FRG Loop Maintenance Menu. These options are the following:

a. To access the FRG Analog Loop Validation Test Menu.

b. To access the FRG Analog Loop Validation Data Dump Menu.

c. To access the FRG Analog Loop Help Test File.

d. To return to the System Maintenance Menu.

e. To access the FRG Loop Diagnostic Routine.

Selecting options 1 or 2 moves the user to a third level menu, the validation test menu or the validation data dump menu, respectively. The routines available on these menus are discussed in section 7.14.1.

Selecting option 3, the FRG Loop Help Text file is displayed on the response screen. This file provides the user with a brief description of all the routines accessible under the MRG Loop Menu (Refer to appendix C for the listing of this help file).

Option 4 returns the user back to the system maintenance menu.

Selecting option 5 moves the user to the FRG Diagnostic Routine. The functions available in this routine are discussed in section 7.14.2.

These FRG Analog Subsystem tests, as well as the diagnostic routine, are used to verify the hardware path between the FRG digital hardware and the STU Downlink Receiver digital hardware. This path consists of the SUM, DELTA, and OMNI channels of the four IF Fruit Reply Generators (each digital reply generator has a corresponding IF reply generator) which feeds replies to an IF Combiner according to parameter information (power, monopulse, left/right of boresight, and code)

received from their respective digital hardware. The output of the IF Combiner is fed to an IF/RF Upconvertor to generate replies at 1090 MHz. Under normal operation the output of the IF/RF Upconvertor would be connected to the Mode S Sensor, but for the FRG Analog Subsystem tests, as well as the MRG Analog Subsystem tests, the replies are returned through a channel selector to the STU portion of the analog subsystem. In this portion of the analog subsystem, replies are fed through an RF/IF Downconvertor to generate replies at 60 MHz, which, in turn, are fed through a log video amplifier to be processed by the VPQ board. The STU Downlink Receiver collects reply data and transmitted power level on the SUM, DELTA, and OMNI channels (which are sampled by ADC's located on the VPQ board).

7.14.1 Validation Test and Data Dump Routines.

Access to the FRG Analog Loop Validation Tests is through the VALIDATION option on the FRG Analog Loop Maintenance Menu (figure 7.14-1). When the VALIDATION option is selected, the FRG Analog Loop Validation Menu appears on the control screen as shown in figure 7.14.1-1.

Referring to figure 7.14.1-1 there are three separate validation tests for the FRG Analog Loop Validations, and may be run individually or as a set. The three tests are as follows:

a. Reply Monopulse Test.

b. Reply Power Test.

c. Reply Code Test.

```
        ADIAG:
        ADIAG:  ***   FRG ANALOG LOOP VALIDATION   ***
        ADIAG:  1 - REPLY MONOPULSE TEST
        ADIAG:  2 - REPLY POWER TEST
        ADIAG:  3 - REPLY CODE TEST
        ADIAG:  4 - EXIT
        ADIAG:  0 - ALL (DEFAULT)
    ADIAG>
```

FIGURE 7.14.1-1. FRG ANALOG LOOP VALIDATION TEST MENU SCREEN

While running any of these validations or validation dumps, one of the following message formats will appear at the bottom of the control screen indicating that a test or data transfer is in progress. For example, if a validation test is being executed then the following message appears:

```
ADIAG:
ADIAG:  Please wait -- FRG Loop: xxxxx Test
ADIAG:  in progress...
ADIAG:  ....
ADIAG:
```

The dots in the fourth line signify that the test is running and the number of dots will increase until the test is completed. The following message appears at the end of execution:

```
ADIAG:
ADIAG:  Please wait -- FRG Loop:  xxxxx Test
ADIAG:  in progress...
ADIAG:  ...execution completed.
ADIAG:
```

The xxxxx will indicate which test is being executed. Similarly, for the validation dump routines the following message appears at the bottom of the control screen:

```
ADIAG:
ADIAG:  Please wait -- FRG Loop:  xxxxx Test
ADIAG:  data transfer in progress...
ADIAG:  ....
ADIAG:
```

The dots in the fourth line signify that the data transfer is in progress (between the STU CPU and the ARIES CPU) and the number of dots increases until the data transfer is completed. The following message appears at the end of execution:

```
ADIAG:
ADIAG:  Please wait -- FRG Loop: xxxxx Test
ADIAG:  data transfer in progress...
ADIAG:  ...data transfer completed.
ADIAG:
```

The three FRG Loop tests mentioned above, along with their associated data dumps, are discussed in further detail in sections 7.14.1.1 through 7.14.1.3.

7.14.1.1 Reply Monopulse Test.

The Reply Monopulse Test exercises the monopulse attenuators on each of the four FRG IF Reply Generators. This is done by keeping the 6-bit power attenuation field of the output data block messages constant and varying each bit of the 8-bit monopulse field. Corresponding power levels read from the STU Downlink Receiver should reflect a constant SUM reading of 0 dBm and the DELTA reading should decrement the amount corresponding to the particular attenuation bit set. The eight attenuation bits are as follows, starting with the LSB: 0.25, 0.5, 1, 2, 4, 8, 16, and 16 dBm. This is done twice for each Reply Generator, once for left of boresight and again for right of boresight. The criteria for a successful validation test requires that the SUM values remain within 1.0 dBm of one another and that the DELTA values be within $\pm$0.75 dBm of its expected value, which would be 16 dBm minus the ATTEN value.

Figure 7.14.1.1-1 contains a brief listing of the data dump format expected by this test in the printer or console display mode. The CNT field indicates the number of valid replies received by the STU for each monopulse attenuation level; there is a maximum of three replies sent at each level. Error flags, should they exist, are displayed as ** to the left of values in the SUM and DELTA columns.

It should be noted that the data displayed are relative values and are scaled by an autocalibration routine each time the test is run. If the absolute power readings read during the autocalibration mode are below a predefined level, a message will be displayed at the top of the data dump with the following format:

LOW POWER READINGS ON FRG #n

where n is the Reply Generator. If two or three generators are below this level, then the message will be repeated for these Reply Generators.

If all four Reply Generators are below this level then the rest of the test is aborted and the following is displayed in the dump file:

```
LOW POWER READINGS DETECTED ON ALL FOUR FRG's

MAXIMUM SUM READINGS:

     FRG#1 = XXXX
     FRG#2 = XXXX
     FRG#3 = XXXX
     FRG#4 = XXXX

MAXIMUM DELTA READINGS:

     FRG#1 = XXXX
     FRG#2 = XXXX
     FRG#3 = XXXX
     FRG#4 = XXXX
```

The rest of the data output will be omitted since the test was aborted after autocalibration. If the left/right of boresight bit is operating incorrectly on any of the Reply Generators, a message will appear above the data dump with the following format:

x LEFT/RIGHT PHASE BIT ERROR(S) DETECTED ON MRG #n

where n is the Reply Generator, and x is the either a 1 or 2 to indicated the possible cause of the error. If only one error is detected, then only one side of boresight is being detected. If two errors are detected, then there is a possiblity that left/right of boresight is reversed.

LEFT OF BORESIGHT:

	FRG #1			FRG #2			...	FRG #4		
ATTEN	SUM	DELTA	CNT	SUM	DELTA	CNT	...	SUM	DELTA	CNT
10.00	-0.1	6.0	3	-0.2	6.1	3	...	0.0	5.9	3
10.25	0.1	5.7	3	-0.1	5.8	3	...	0.0	5.7	3
10.50	0.2	5.5	3	0.0	5.6	3	...	-0.1	5.5	3
11.00	0.0	5.0	3	0.1	5.1	3	...	0.0	4.9	3
12.00	-0.1	4.1	3	0.0	4.0	3	...	0.1	4.0	3
.	.	.	.	.	.	.	...	.	.	.
.	.	.	.	.	.	.	...	.	.	.

RIGHT OF BORESIGHT:

	FRG #1			FRG #2			...	FRG #4		
ATTEN	SUM	DELTA	CNT	SUM	DELTA	CNT	...	SUM	DELTA	CNT
10.00	0.1	6.0	3	0.0	6.1	3	...	0.0	5.9	3
10.25	0.0	5.8	3	-0.1	5.7	3	...	0.1	5.7	3
.	.	.	.	.	.	.	...	.	.	.
.	.	.	.	.	.	.	...	.	.	.

FIGURE 7.14.1.1-1. SAMPLE OF FRG REPLY MONOPULSE TEST DATA DUMP

In the event of a read buffer timeout error on the FRC (described in section 7.4), the remainder of the test will be aborted and the following message is displayed in the data dump file:

** ERROR: FRC TIMEOUT ENCOUNTERED

This message indicates that read/write buffer flip-flop on the FRC is being held stationary because data was not written into the buffer or the buffer is not full.

For a complete listing of the output file for this test, refer to appendix B.

7.14.1.2 Reply Power Test.

The Reply Power Test exercises the power attenuators on each of the four FRG IF Reply Generators. This is done by keeping the 8-bit monopulse field of the output data block messages constant and varying each bit of the 6-bit power attenuation field for mainbeam power and sidelobe power. Corresponding power levels read from the STU should reflect the following values: for mainbeam power the SUM power should equal 10 dBm minus the ATTEN value and sidelobe power should equal 10 dBm minus the ATTEN value plus the mainbeam/sidelobe bias calculated during the autocalibration, for mainbeam power the DELTA power should equal 16 dBm minus the

ATTEN value and sidelobe power should equal 16 dBm minus the ATTEN value plus the mainbeam/sidelobe bias, the OMNI power should equal -6 dBm minus the ATTEN value for both mainbeam and sidelobe power. The DELTA reading should track the SUM reading with a +6 dBm difference and the OMNI reading should track the SUM reading with an approximate -16 dBm difference.

The criteria for a successful validation test requires that the SUM values be within ±0.75 dBm of its expected value and the DELTA and OMNI values be within ±0.75 dBm of their expected values, which for the DELTA values should be 6 dBm above the SUM and the OMNI should be about 16 dBm below the SUM, the actual SUM-OMNI difference is calculated and displayed at the bottom of the data dump. In addition, the SUM values for each of the four Reply Generators should all be within 1.0 dBm of each other at each attenuation level; otherwise, a tracking error will occur. Figure 7.14.1.2-1 contains a brief listing of the data dump format expected by this test in the printer mode. The CNT field indicates the number of valid replies received by the STU for each power attenuation level; there is a maximum of three replies sent at each level. Two passes are made at each attenuation level, once for the SUM and DELTA readings and again for the OMNI reading. Error flags, should they exist, are displayed as ** to the left of values in the SUM, DELTA, and OMNI columns; tracking error flags are displayed as <*** in the TRACKING FLAG column.

MAINBEAM POWER READINGS (in dBm):

	F R G # 1					F R G # 2				
ATTEN	SUM	DELTA	CNT	OMNI	CNT	SUM	DELTA	CNT	...	TRACKING FLAG
16	-6.0	0.0	3	-22.1	3	-5.9	-0.1	3	...	
17	-6.9	-0.8	3	-23.1	3	-7.0	-1.0	3	...	
18	-8.1	-1.9	3	-24.0	3	-7.9	-2.1	3	...	
20	-10.1	-3.7	3	-25.9	3	-10.0	-4.1	3	...	
24	-13.9	-8.1	3	-30.2	3	-14.0	-8.0	3	...	
.	.	.	.	.	.	.	.	.	...	
.	.	.	.	.	.	.	.	.	...	

FIGURE 7.14.1.2-1. SAMPLE OF FRG REPLY POWER TEST DATA DUMP

It should be noted that the data displayed are relative values and are scaled by an autocalibration routine each time the test is run. If the absolute power sample read during the autocalibration mode are below a predefined level, a message is displayed at the top of the data dump in the following format:

LOW POWER READINGS ON FRG #n

where n is the Reply Generator. If two or three generators are below this level, then the message is repeated for these Reply Generators. If all four Reply

Generators are below this level then the rest of the test is aborted and the following is displayed in the dump file:

LOW POWER READINGS DETECTED ON ALL FOUR FRG's

MAXIMUM SUM READINGS:

FRG#1 = XXXX
FRG#2 = XXXX
FRG#3 = XXXX
FRG#4 = XXXX

MAXIMUM DELTA READINGS:

FRG#1 = XXXX
FRG#2 = XXXX
FRG#3 = XXXX
FRG#4 = XXXX

MAXIMUM OMNI READINGS:

FRG#1 = XXXX
FRG#2 = XXXX
FRG#3 = XXXX
FRG#3 = XXXX

The rest of the data output will be omitted since the test was aborted after autocalibration. In the event of a read buffer timeout error on the FRC (described in section 7.4), the remainder of the test will be aborted and the following message will be displayed in the data dump file:

** ERROR: FRC TIMEOUT ENCOUNTERED

This message will indicate that read/write buffer flip-flop on the FRC is being held stationary because data was not written into the buffer or the buffer is not full.

The summary section at the bottom of the data dump contains information compiled from the data presented before it and is used as an overview and in the case of the SUM-OMNI difference it is used as a pass criteria. The MAINBEAM/SIDELOBE BIAS is calculated during autocalibration by determining the difference of the SUM power, at a given attenuation level, between mainbeam and sidelobe. SUM-DELTA and SUM-OMNI DIFFERENCES are an average of the respective power field differences for both mainbeam and sidelobe power readings. The AUTOCALIBRATION SCALING values are determined during autocalibration and reflect the number of bits of attenuation needed to drop the respective power field 1 dBm. For a complete listing of the output file for this test, refer to appendix B.

7.14.1.3 Reply Code Test.

The Reply Code Test exercises the data content of the three different reply messages; ATCRBS replies and Long and Short Mode S replies. In this test the

power and monopulse attenuation levels are kept at 0 (maximum power) and the contents of the identity codes and message fields are varied. Data patterns sent consist of fields of all 0's, F's, 5's, and A's followed by two varying sequences called "running 1" and "running 0". A running 1 starts with a reply that has a 1 in the most significant bit (MSB) of the field and 0's in all other bits. With each subsequent reply the 1 is shifted one bit toward the LSB. Similarly, the running 0 is the compliment of the running 1. Superimposed over all of these patterns is either a DF field for the Mode S replies, or the reply bracket for the ATCRBS replies (X'8002'). The replies received by the STU are stored and checked against a reference table for errors. If a mismatch occurs the the reply message is transmitted again, up to 3 times per reply message and up to a maximum of 5 retries per validation run. If a mismatch still exists after the retries, the incorrect reply message is flagged with a ** and the test result is labeled FAILURE. Figure 7.14.1.3-1 contains a brief listing of each of the three different types of reply code tests in the printer output mode.

In the event of a read buffer timeout error on the FRC (described in section 7.4), the remainder of the test will be aborted and the following message will be displayed in the data dump file:

** ERROR: FRC TIMEOUT ENCOUNTERED

This message will indicate that read/write buffer flip-flop on the FRC is being held stationary because data was not written into the buffer or the buffer is not full.

For a complete listing of the output file for this test, refer to appendix B.

7.14.2 Diagnostic Routine.

The FRG Analog Subsystem Diagnostic routine is a semiautomated debugging tool used to track down problems within the FRG Analog subsystem. This routine is similar to the Output Reply (RF TEST) of the MRG Diagnostic No. 2 routine described in section 7.3.2.2, except this routine is run with an active STU Downlink Receiver to receive the replies being sent through the analog subsystem. These replies are then read from the STU Downlink Receiver by the STU CPU and sent back to the ARIES CPU, if requested.

Upon selecting this routine on the FRG Analog Loop Menu, the message shown below will appear on the control screen.

```
        ADIAG:
        ADIAG:  EXECUTION OF THIS ROUTINE WILL CAUSE THE TCOM SPACE
        ADIAG:  USED BY THE FRG LOOP CODE TEST TO BE OVERWRITTEN,
        ADIAG:  i.e. PREVIOUSLY COLLECTED DATA WILL BE CORRUPTED!!!
        ADIAG:
        ADIAG:  DO YOU WISH TO CONTINUE? ([Y]/N)
    ADIAG>
```

This message is warning the uset that if the FRG Analog Subsystem Code Test was run previously and a data dump was not performed, then the data collected will be over written by the diagnostic routine. The user then has the option of continuing or returning to the FRG Analog Loop Menu.

CODE TEST DATA: ATCRBS REPLIES

FRG#1	FLG	FRG#2	FLG	FRG#3	FLG	FRG#4	FLG	REF.
8002		8002		8002		8002		8002
D557		D557		D557		D557		D557
AAAA		AAAA		AAAA		AAAA		AAAA
FFFF		FFFF		FFFF		FFFF		FFFF
8002		8002		8002		8002		8002
C002		C002		C002		C002		C002
'		'		'		'		'
'		'		'		'		'

CODE TEST DATA: MODE S SHORT REPLIES

F R G # 1					F R G # 2					'''	R E F E R E N C E			
WD1	WD2	WD3	WD4	FLG	WD1	WD2	WD3	WD4	FLG	'''	WD1	WD2	WD3	WD4
20	0	0	0		20	0	0	0		'''	20	0	0	0
2D	5555	5555	5555		2D	5555	5555	5555		'''	2D	5555	5555	5555
5A	AAAA	AAAA	AAAA		5A	AAAA	AAAA	AAAA		'''	5A	AAAA	AAAA	AAAA
27	FFFF	FFFF	FFFF		27	FFFF	FFFF	FFFF		'''	27	FFFF	FFFF	FFFF
'	'	'	'		'	'	'	'		'''	'	'	'	'
28	1	0	0		28	1	0	0		'''	28	1	0	0
58	0	8000	0		58	0	8000	0		'''	58	0	8000	0
20	0	4000	0		20	0	4000	0		'''	20	0	4000	0
'	'	'	'		'	'	'	'		'''	'	'	'	'
2F	FFFF	FF7F	FFFF		2F	FFFF	FF7F	FFFF		'''	2F	FFFF	FF7F	FFFF
5F	FFFF	FFBF	FFFF		5F	FFFF	FFBF	FFFF		'''	5F	FFFF	FFBF	FFFF
'	'	'	'		'	'	'	'		'''	'	'	'	'
'	'	'	'		'	'	'	'		'''	'	'	'	'

CODE TEST DATA: MODE S LONG REPLIES

	WD1	WD2	WD3	WD4	WD5	'''		WD1	WD2	WD3	WD4	'''
FRG#1:	A000	0	0	0	0	'''	REF:	A000	0	0	0	'''
FRG#2:	A000	0	0	0	0	'''						
FRG#3:	A000	0	0	0	0	'''						
FRG#4:	A000	0	0	0	0	'''						
FRG#1:	A055	5555	5555	5555	5555	'''	REF:	A055	5555	5555	5555	'''
FRG#2:	A055	5555	5555	5555	5555	'''						
FRG#3:	A055	5555	5555	5555	5555	'''						
FRG#4:	A055	5555	5555	5555	5555	'''						
FRG#1:	A2AA	AAAA	AAAA	AAAA	AAAA	'''	REF:	A2AA	AAAA	AAAA	AAAA	'''
FRG#2:	A2AA	AAAA	AAAA	AAAA	AAAA	'''						
FRG#3:	A2AA	AAAA	AAAA	AAAA	AAAA	'''						
FRG#4:	A2AA	AAAA	AAAA	AAAA	AAAA	'''						
'	'	'	'	'	'	'''		'	'	'	'	'''
'	'	'	'	'	'	'''		'	'	'	'	'''

FIGURE 7.14.1.3-1. SAMPLE OF FRG REPLY CODE TEST DATA DUMP

If the user choices to continue, the following query appears on the control screen:

```
ADIAG:  ENTER THE NUMBER OF ITERATIONS (0 = CONTINUOUS)
ADIAG>
```

The user then enters a decimal number at the control terminal. This number is used by the diagnostic routine to define the number of times the function will be executed once the required information has been collected. If no value is entered the parameter defaults to 0 which is the continuous mode.

Next the user is to respond to the query:

```
ADIAG:  SELECT REPLY GENERATOR ([1],2,3,OR 4)
ADIAG>
```

The default response to this query is Fruit Reply Generator 1, as indicated by the brackets in the query. The user response to this prompt will determine the Fruit Reply Generator that will be exercised.

The next query which requires a user response is:

```
ADIAG:  SELECT CW STATE(Y OR [N])
ADIAG>
```

This prompt gives the user the option of turning the PAM modulation on continuously.

The next query to which the user must respond is:

```
ADIAG:  ATCRBS OR MODE S ([A]/M)?
ADIAG>
```

The response to this query will determine if the prompt;

```
ADIAG:  ENTER ATCRBS REPLY MESSAGE
ADIAG:  FORMAT:> XXXX XXXX XXXX XXXX <CR>
ADIAG:  DEFAULT  0020 0021 0000 FFFF
ADIAG>
```

or,

```
ADIAG:  ENTER MODE S REPLY MESSAGE (1ST 4 HALFWORDS)
ADIAG:  FORMAT:> XXXX XXXX XXXX XXXX <CR>
ADIAG:  DEFAULT  0020 0028 0000 A801
ADIAG>
```

```
        ADIAG:  ENTER MODE S REPLY MESSAGE (LAST 6 HALFWORDS)
        ADIAG:  FORMAT:> XXXX XXXX XXXX XXXX XXXX XXXX <CR>
        ADIAG:  DEFAULT  2345 6789 ABCD EFFF 0F0F 00FF
    ADIAG>
```

is displayed on the control screen. The user then enters a specific type of reply message or selects the default reply message by just pressing the RETURN key. Once the reply message is selected, the user is prompted with the following two queries:

```
    ADIAG:  DO YOU WANT DATA COLLECTED IN BLOCKS(640 SAMPLES)? (Y/[N])
ADIAG>

    ADIAG:  DATA DUMP ON:  CONSOLE, PRINTER, BOTH OR NULL?(C/P/B/[N])
ADIAG>
```

The first option allows the user to collect a block of 640 replies by the STU before transmitting the data back to the ARIES; allowing data to be collected at a higher rate without the delay of transmitting the data across the Communications Link between each reply. If the user selects Y for the first query and does not select N for the second, then 640 replies are sent from the ARIES through the MRG analog subsystem to the STU for collection. After the 640th reply is received by the STU, the STU will transmit all 640 replies back to ARIES for display on the response screen and/or the printer. If N is selected in the first query, then after each reply is received by the STU, the reply block is sent back to the ARIES for display. If the user selects N for the second query, then no data is sent back to the ARIES. This option sends replies through the analog subsystem at a very high rate.

Once the user selects how the data is to be collected, the routine begins sending replies. If data is selected to be displayed, then each reply transmitted is displayed on the response screen as it was received by the STU. If the printer is selected, then data will be printed either after a full block of 640 replies is collected or the diagnostic is stopped. (This is due to the printer being accessed through the spooler.) The following is a sample of the data displayed on the response screen;

```
aaaaaaaa:  bbbbbbbb ssss -->   ddd  xxx1 xxx2 xxx3
xxx4 xxx5 xxx6 xxx7 xxx8 xxx9 xx10 xx11 xx12 xx13
```

where the fields are defined as follows:

a. aaaaaaaa - interrupt count expected by the ARIES (in decimal).

b. bbbbbbbb - interrupt count at the STU (in decimal).

c. ssss - STU Receiver status word (2-byte hexadecimal).

d. ddd - will be DEL if the delta is selected or OMN for omni.

e. xxx1 through xx13 - STU Receiver data block message.

The format of the message fields is defined in appendix D.

Selection of the CONTINUOUS mode, as described above, will cause the initiation of the sub-task CHGREPLY. This task is resident in memory and is used to change the content of the reply messages being sent out by the reply generator. Figure 7.13.2.2-1 shows a sample menu format of options used in this diagnostic under CHGREPLY.

Referring to Figure 7.13.2.2-1 there are seven options listed plus the three at the bottom of the menu. The following is a description of each option from this menu:

a. Reply Time. This function allows the user to change the Reply Time field of the current message, which corresponds to the first 20 bits of the Reply Message. The IIII field depicts the integer value of this field and XXXXX is the hexadecimal representation, where the least significant bit represents 62.5 nanoseconds. If the user selects this function the following prompt will appear on the control screen:

```
     CHGREPLY:  Enter reply time (in 20-bit Hex field:  XXXXX)
CHGREPLY>
```

```
     CHGREPLY:
     CHGREPLY:  DIAGNOSTICS IN CONTINUOUS MODE
     CHGREPLY:
     CHGREPLY:  Added delay between replies:  1 millisecond(s)
     CHGREPLY:
     CHGREPLY:CURRENT REPLY MESSAGE:  XXXX XXXX XXXX XXXX
     CHGREPLY:
     CHGREPLY:  1 - Reply Time = IIII (XXXXX, 20-bit Hex field)
     CHGREPLY:  2 - Mainbeam/Sidelobe = X  (1-bit hex field)
     CHGREPLY:  3 - Type = X  (4-bit hex field)
     CHGREPLY:  4 - Power (Attenuation) = II dBm (XX, 6-bit field)
     CHGREPLY:  5 - Left/Right Boresight = X  (1-bit hex field)
     CHGREPLY:  6 - Monopulse setting = XX  (8-bit hex field)
     CHGREPLY:  7 - ATCRBS Code = XXXX  (2-byte Hex field)
     CHGREPLY:
     CHGREPLY:  DELTA being read by STU
     CHGREPLY:
     CHGREPLY:  ('A' to change message; 'D' to change delay)
     CHGREPLY:  ('F' to toggle delta/omni reading on STU)
     CHGREPLY:  Enter no. to change or 'E' to exit
CHGREPLY>
```

FIGURE 7.13.2.2-1. SAMPLE FORMAT OF FRG CHGREPLY OPTION MENU

The user then enters the Reply Time desired in hexadecimal format.

b. Mainbeam/Sidelobe. This function allows the user to select mainbeam or sidelobe power field, which corresponds to bit 10 in the second word of the reply (bit 0 is the MSB and bit 15 is the LSB in each word). The X field depicts the current value of the 1-bit field, where a 1 would signify mainbeam and a 0 would signify sidelobe. If the user selects this function the following prompt will appear on the control screen:

```
CHGREPLY:  Enter Mainbeam(1)/Sidelobe(0)
CHGREPLY>
```

The user then enters either a 1 or a 0.

c. Type. This function allows the user to change the type field of the current reply message which corresponds to the least significant nibble of the second word. The X field signifies the current reply message type. If the user selects this function the following prompt appears on the control screen:

```
CHGREPLY:  Enter Type field (1, 2, 4, or 8)
CHGREPLY>
```

The user then enters one of the four type codes, where the following describes each of the types:

1 = Nondiscrete Reply (ATCRBS)

2 = Mode S All-Call Reply

4 = Mode S Surveillance Reply

8 = Mode S Comm-B Reply

d. Power (Attenuation). This function allows the user to change the power attenuation field of the current reply message. The II field depicts the integer value of this field and XX is the hexadecimal value. The 6-bit power attenuation field, located in the upper byte of the third word, has a range from 0 to 63 dBm. If the user selects this function the following prompt appears on the control screen:

```
CHGREPLY:  Enter Power field (in decimal:  0-63 dBm)
CHGREPLY>
```

The user then enters the desired power attenuation level in decimal format.

e. Left/Right Boresight. This function allows the user to select left or right of boresight field, which corresponds to bit 7 in the third word of the

reply. The X field depicts the current value of the 1-bit field, where a 1 would signify left of boresight and a 0 would signify right of boresight. If the user selects this function the following prompt appears on the control screen:

```
CHGREPLY:  Enter Left(1)/Right(0) of Boresight
CHGREPLY>
```

The user then enters either a 1 or a 0.

f. Monopulse setting. This function allows the user to change the monopulse field of the current reply message. The XX field depicts the 8-bit hexadecimal value of this field located in the lower byte of the third word. If the user selects this function the following prompt appears on the control screen:

```
CHGREPLY:  Enter Monopulse field (8-bit Hex field:  XX)
CHGREPLY>
```

The user then enters the desired monopulse setting in hexadecimal format.

g. ATCRBS Code. This function allows the user to change the ATCRBS code within the reply message. This 2-byte hexadecimal field, depicted by XXXX, corresponds to the fourth word of the reply. Selection of this function causes the following prompt to appear on the control screen:

```
CHGREPLY:  Enter ATCRBS Code (2-byte hex field -> XXXX)
CHGREPLY>
```

The user then enters the 2-byte field in hexadecimal format.

h. Mode S Data. This function allows the user to change the Mode S data within the reply message. This 14-byte hexadecimal field, depicted by the seven XXXX fields, corresponds to the fourth through tenth words of the reply. Selection of this function causes the following prompt to appear on the control screen:

```
CHGREPLY:  Enter Mode S data - words 4-10
CHGREPLY:  XXXX XXXX XXXX XXXX XXXX XXXX XXXX
CHGREPLY>
```

The user then enters the seven 2-byte fields (XXXX) in hexadecimal format.

i. "A" to change message. This function allows the user to change the entire message at once. If this function is selected and the message type corresponds to ATCRBS, then the following prompt appears on the control screen:

```
CHGREPLY:  Enter Reply Message
CHGREPLY:  XXXX XXXX XXXX XXXX
CHGREPLY>
```

The user then enters the four 2-byte fields (XXXX) in hexadecimal format. If this function is selected and the message type corresponds to a Mode S type, then the following prompt appears on the control screen:

```
CHGREPLY:  Enter Reply Message
CHGREPLY:  XXXX XXXX XXXX XXXX XXXX XXXX XXXX XXXX XXXX XXXX
CHGREPLY>
```

The user then enters the ten 2-byte fields (XXXX) in hexadecimal format.

j. "D" to change delay. This function allows the user to change the software delay added between each reply sent out. If the user selects this function then the following prompt appears on the control screen:

```
CHGREPLY:  Enter delay
CHGREPLY>
```

```
CHGREPLY:  Enter time unit:
CHGREPLY:  1 - millisecond
CHGREPLY:  2 - second
CHGREPLY:  3 - minute
CHGREPLY>
```

The user first enters the number of units of delay desired followed by the type of unit. If the user enters 0 for the delay then the second prompt is omitted and no delay is added between replies.

k. "F" to toggle delta/omni reading on STU. This function selects whether delta or omni power is being sampled by the STU. The setting of this toggle function is displayed on the CHGREPLY menu as shown in figure 7.13.2.2-1.

l. "E" to exit. This function returns the user back to the FRG Analog Loop Menu. The test concludes with the following message on the control screen signifying the termination of the CHGREPLY routine:

```
CHGREPLY:  END OF TASK    0
```

At this point the processing is completed for the FRG Analog Loop Diagnostic routine and the following message appears on the response terminal before the user is returned to the FRG Analog Loop Menu:

FRG ANALOG LOOP (RF) DIAGNOSTIC COMPLETED