technical note techn

Placement of Smoke Detector Ports Within Cargo Liners

Timothy Marker

FEDERAL AVIATION ADMINISTRATION
JUL 13 1999
TECHNICAL CENTER LIBRARY
ATLANTIC CITY INT'L AIRPORT, NJ 08405

February 1989

DOT/FAA/CT-TN89/17

Document is on file at the Technical Center Library, Atlantic City International Airport, N.J. 08405

U.S. Department of Transportation
Federal Aviation Administration

Technical Center
Atlantic City International Airport, N.J. 08405

FAA WJH Technical Center
00020805

Marker, Timothy, Placement of smoke detector ports within cargo liners., ACT Library, 00020805

NOTICE

This document is disseminated under the sponsorship of the U. S. Department of Transportation in the interest of information exchange. The United States Government assumes no liability for the contents or use thereof.

The United States Government does not endorse products or manufacturers. Trade or manufacturers' names appear herein solely because they are considered essential to the objective of this report.

Technical Report Documentation Page

1. Report No.	2. Government Accession No.	3. Recipient's Catalog No.
DOT/FAA/TN89/17		

4. Title and Subtitle	5. Report Date
PLACEMENT OF SMOKE DETECTOR PORTS WITHIN CARGO LINERS	February 1989
	6. Performing Organization Code: ACD-240
7. Author(s): Timothy Marker	8. Performing Organization Report No.: DOT/FAA/CT-TN89/17
9. Performing Organization Name and Address: Federal Aviation Administration, Technical Center, Atlantic City International Airport, NJ 08405	10. Work Unit No. (TRAIS)
	11. Contract or Grant No.
12. Sponsoring Agency Name and Address: U.S. Department of Transportation, Federal Aviation Administration, Technical Center, Atlantic City International Airport, NJ 08405	13. Type of Report and Period Covered: Technical Note
	14. Sponsoring Agency Code

15. Supplementary Notes

16. Abstract

Tests were conducted on the cargo liner burnthrough apparatus whereby holes of various diameters were drilled into Conolite® liners at three different locations of the ceiling position. The tests were conducted to investigate the likelihood of fire containment in the event that surface mounted smoke detector ports should fail during a fire.

17. Key Words	18. Distribution Statement
Cargo Liner Burnthrough Smoke Detector Test Design Feature	Document is on file at the Technical Center Library, Atlantic City International Airport, New Jersey 08405

19. Security Classif. (of this report)	20. Security Classif. (of this page)	21. No. of Pages	22. Price
Unclassified	Unclassified	7	

Form DOT F 1700.7 (8-72) Reproduction of completed page authorized

TABLE OF CONTENTS

	Page
EXECUTIVE SUMMARY	v
INTRODUCTION	1
Purpose	1
Background	1
DISCUSSION	1
Test Apparatus	1
Test Results	1
CONCLUSIONS	2
REFERENCES	2

LIST OF ILLUSTRATIONS

Figure		Page
1	Hole Location Within Cargo Liner Test Specimen	3
2	Cargo Liner Hole Test (Detector Port Centered Over Burner Flame)	4

EXECUTIVE SUMMARY

Fire burnthrough testing of cargo liner design features in the 2-gallon-per-hour burner, as prescribed in Federal Aviation Regulation (FAR) 25.857, effective June 16, 1986, is not explicit with regard to describing the exact location of the design feature being evaluated within the test rig. The location of the design feature (once it is mounted in the test rig) relative to the burner flame will dictate the severity of the exposure and affect the likelihood of failure. When testing surface mounted smoke detector ports, it is recommended that the port or hole be centered over the burner cone; i.e., 5 inches from the vertical plane of the sidewall panel, with the thermocouple mounted 4 inches directly above the hole. At this test condition, it was determined that a 3/8-inch hole was the maximum size opening that would meet the 400 °F criterion specified in FAR 25.857.

INTRODUCTION

PURPOSE.

This report contains the results of cargo liner tests utilizing Conolite® fiberglass/polyester liner materials with various diameter holes drilled in several locations to determine the capability of the liner to safely contain a fire.

BACKGROUND.

Cargo liner fire testing, as per FAR 25.857, effective June 16, 1986, requires the liner materials to meet new, more stringent fire resistance standards (reference 1). The new test method requires the cargo lining material to resist flame penetration for 5 minutes and the peak temperature measured at 4 inches above the horizontal sample to not exceed 400 degrees Fahrenheit (°F). As stated in the FAR, "Each specimen tested must simulate the cargo compartment sidewall or ceiling liner panel, including design features such as joints, lamp assemblies, etc., the failure of which would affect the capability of the liner to safely contain a fire." In response to several difficulties encountered when testing cargo liner systems with certain design features, tests were performed on a number of typical cargo liner systems. In an effort to simplify and standardize the testing procedures, the results along with several recommendations were discussed and documented (reference 2). However, the report does not address testing performed on smoke detector sampling line holes or the ability of the liner to safely contain a fire in the event that the smoke tubes melt. This report contains an investigation of cargo liner characteristics when tested with different diameter holes drilled at various locations. The purpose was to determine the maximum hole diameter that will meet the 400 °F test criterion specified in FAR 25.875 in the event that the detector sampling line separates or melts away from the liner.

DISCUSSION

TEST APPARATUS.

The burner apparatus used was identical to that which is prescribed in the final rule with the exception of thermocouple placement. In all tests, the thermocouple was positioned directly above the hole at a distance of 4 inches, with a total of three different hole locations being tested. In the first test, the hole was positioned at a distance of 12 inches from the vertical plane of the sidewall panel, and the second test at 8 inches from the vertical plane of the sidewall panel (figure 1). In order to evaluate the worst case condition, the third test positioned the hole directly over the center of the burner cone, i.e., 5 inches from the vertical plane of the sidewall panel. Several different hole diameters were tested in this position, the results of which are plotted in figure 2.

TEST RESULTS.

In order to establish a baseline temperature for comparison, a Conolite® liner was tested with no holes. The maximum temperature reached 260 °F at 4 inches above the panel, centered over the burner cone. During the first test, a 1/4 inch hole was drilled at a distance of 12 inches from the vertical plane of the sidewall panel. This test was followed by successive tests using 3/8, 1/2, 3/4, and 1 inch-diameter holes at the same location. In all tests, the backface of the Conolite panel flashed within 15 seconds of flame impingement as the flame could easily ignite the combustible gases given off via the hole in the liner. A hole of 3/4 inches in diameter was found to be the maximum size that would not allow the temperature to exceed 400 °F. The second test yielded identical results. During the third test in which the location of the holes were centered over the burner cone, a 3/8 inch hole was found to be the maximum diameter that would enable the liner to pass, yielding a temperature of 385 °F (figure 2).

CONCLUSIONS

The tests conducted illustrate how the location of the design feature, relative to the burner flame, will greatly affect the severity of exposure. In order to expose the particular design feature to the worst case or most severe condition, the smoke detection port or hole should be centered over the burner cone, 5 inches from the vertical plane of the sidewall panel.

REFERENCES

1. Airworthiness Standards; Fire Protection Requirements for Cargo or Baggage Compartments; Federal Register, Volume 5, No. 95, pp, 18236-18247, May 16, 1986.

2. Marker, T., Burnthrough Test Procedures for Cargo Liner Design Features, FAA/CT-TN88/33, September 1988.

Marker, Timothy, Placement of smoke detector ports within cargo liners., ACT Library, 00020805

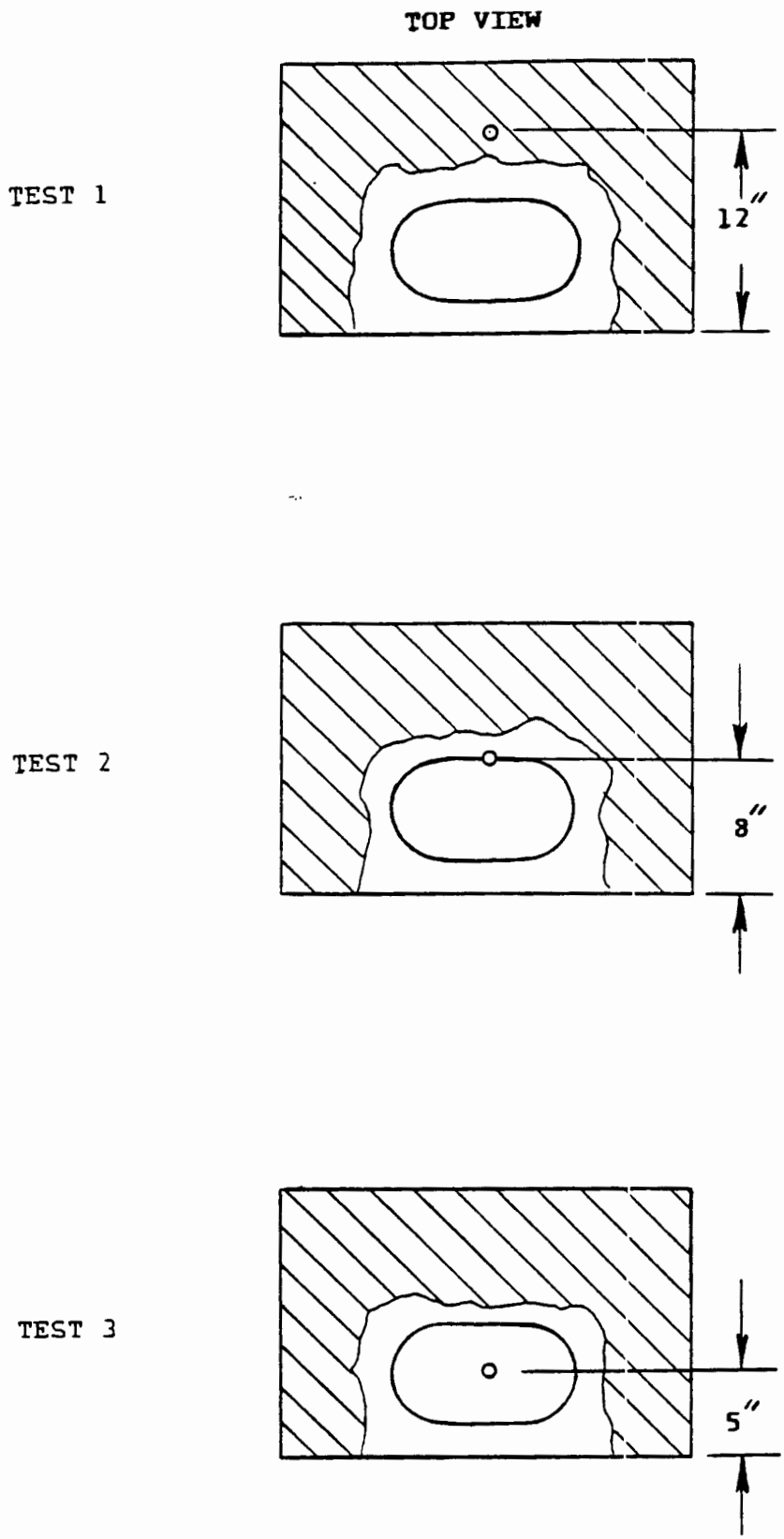

FIGURE 1. HOLE LOCATION WITHIN CARGO LINER TEST SPECIMEN

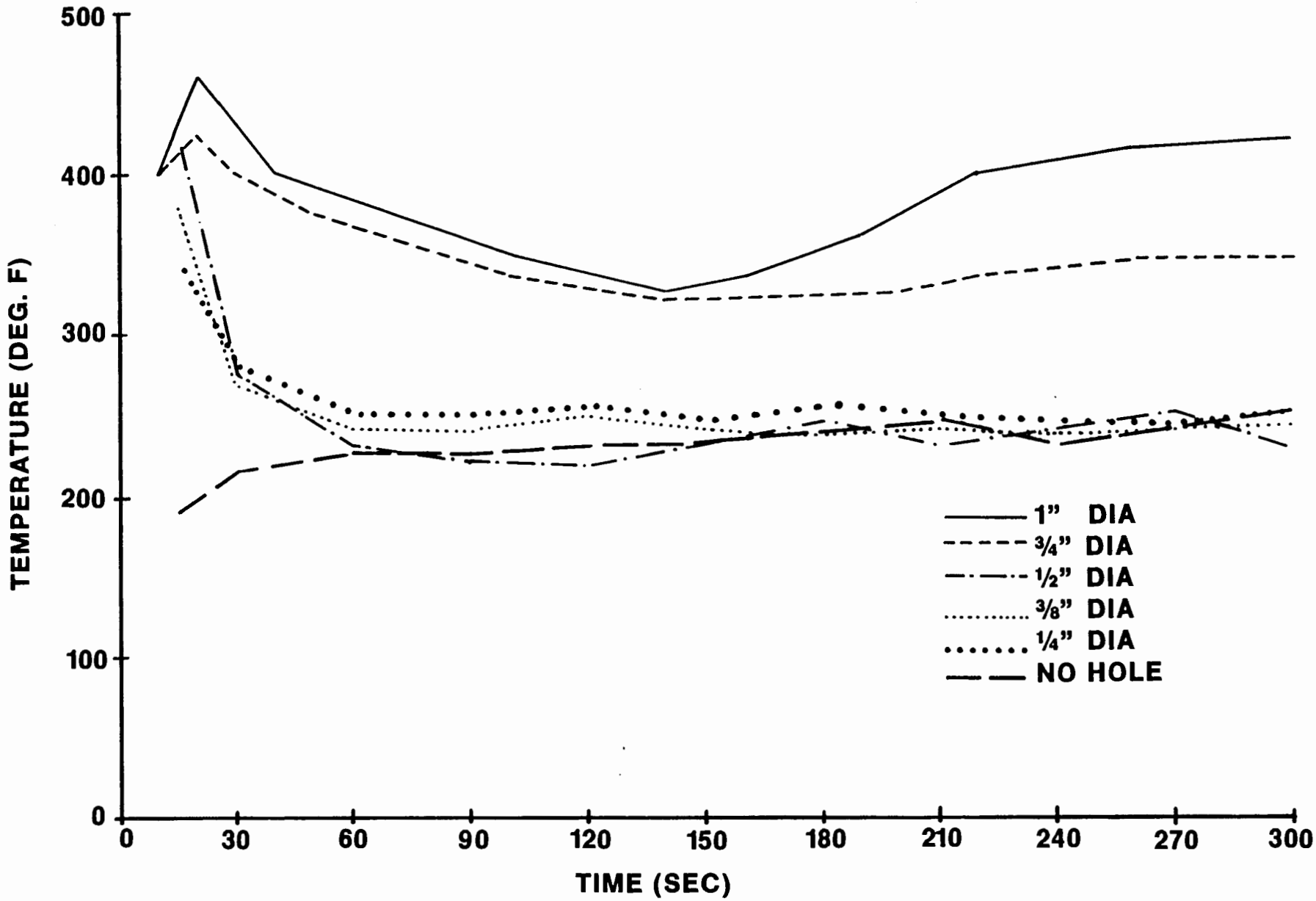

FIGURE 2. CARGO LINER HOLE TEST (DETECTOR PORT CENTERED OVER BURNER FLAME)