CT
TN
89
22
COPY 3

technical note technical

FEDERAL AVIATION ADMINISTRATION
TECHNICAL CENTER LIBRARY
ATLANTIC CITY INT'L ARPRT, NJ 08405

Fuel Containment System Concept to Reduce Spillage

Robert F. Salmon

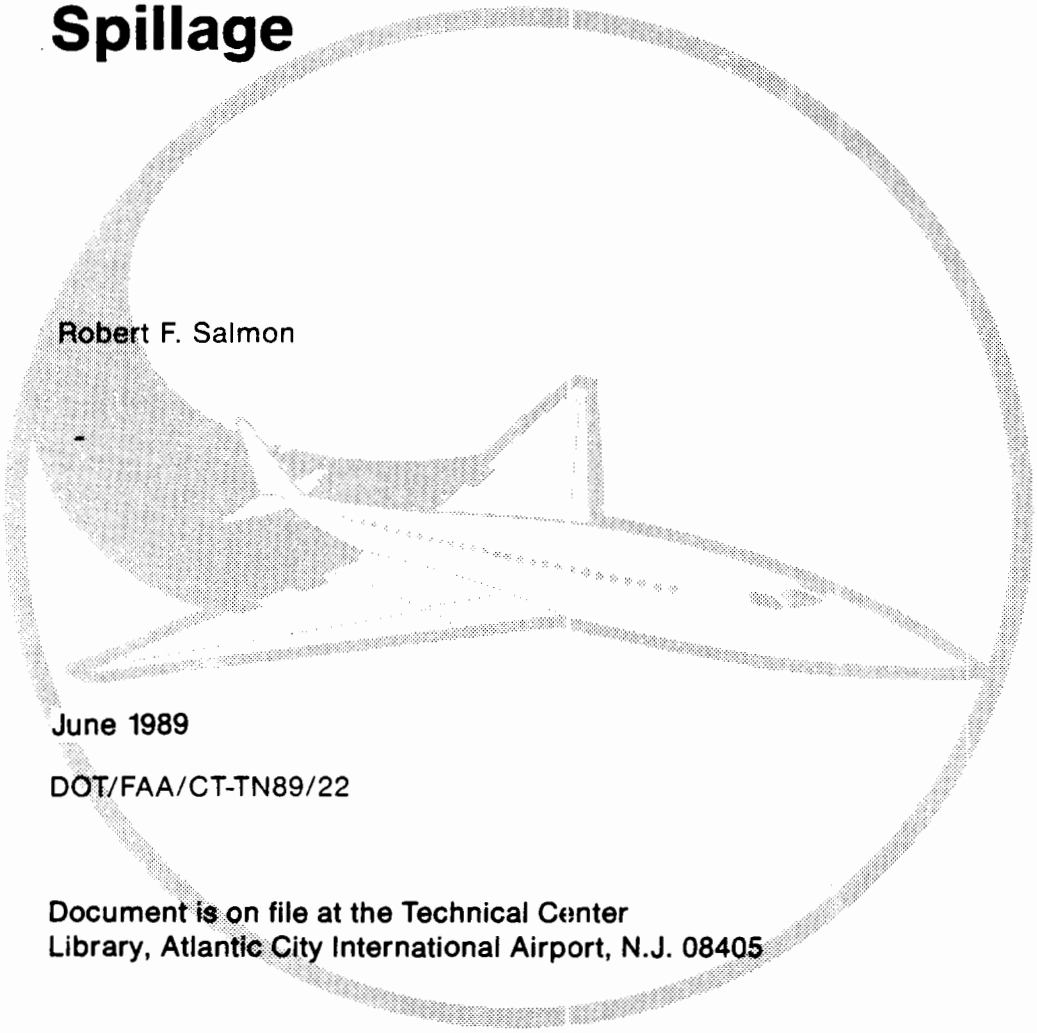

June 1989

DOT/FAA/CT-TN89/22

Document is on file at the Technical Center
Library, Atlantic City International Airport, N.J. 08405

U.S. Department of Transportation
Federal Aviation Administration

Technical Center
Atlantic City International Airport, N.J. 08405

FAA Technical Center
00016094

NOTICE

This document is disseminated under the sponsorship of the U. S. Department of Transportation in the interest of information exchange. The United States Government assumes no liability for the contents or use thereof.

The United States Government does not endorse products or manufacturers. Trade or manufacturers' names appear herein solely because they are considered essential to the objective of this report.

Technical Report Documentation Page

1. Report No.	2. Government Accession No.	3. Recipient's Catalog No.
DOT/FAA/CT-TN89/22		

4. Title and Subtitle	5. Report Date
FUEL CONTAINMENT SYSTEM CONCEPT TO REDUCE SPILLAGE	June 1989
	6. Performing Organization Code
7. Author(s) Robert F. Salmon	8. Performing Organization Report No. DOT/FAA/CT-TN89/22
9. Performing Organization Name and Address Federal Aviation Administration Technical Center Atlantic City International Airport, NJ 08405	10. Work Unit No. (TRAIS)
	11. Contract or Grant No.
12. Sponsoring Agency Name and Address U.S. Department of Transportation Federal Aviation Administration Technical Center Atlantic City International Airport, NJ 08405	13. Type of Report and Period Covered Technical Note
	14. Sponsoring Agency Code

15. Supplementary Notes

16. Abstract

The purpose of this report is to describe a new concept in aircraft fuel tank design to reduce the spillage from an aircraft fuel tank which has been ruptured during what could be considered a survivable crash. The time element is very critical for survival after a crash. By reducing the amount of fuel spilled during the first minute after the aircraft comes to rest, the probability of passenger survival can be greatly enhanced.

17. Key Words	18. Distribution Statement
Fuel Containment Fuel Spillage Reticulated Foam Fuel Bladders	Document is on file at the Technical Center Library, Atlantic City International Airport, New Jersey 08405

19. Security Classif. (of this report)	20. Security Classif. (of this page)	21. No. of Pages	22. Price
Unclassified	Unclassified	25	

Form DOT F 1700.7 (8-72) Reproduction of completed page authorized

TABLE OF CONTENTS

	Page
EXECUTIVE SUMMARY	vii
INTRODUCTION	1
Purpose	1
Background	1
SECTION 1 - FUEL CONTAINMENT TESTS	1
Discussion	1
Test Apparatus	2
Test Instrumentation	6
Test Procedures	7
Results and Analysis	8
Summary of Results	10
SECTION 2 - COMPARISON OF THE THREE TANK CONFIGURATIONS CONTAINMENT CAPABILITIES	10
Configuration 1 - Unmodified Tank	10
Configuration 2 - The Compartmented Tank with the Containment System not Operating	11
Configuration 3 - The Compartmented Tank with the Containment System Operating	11
SECTION 3 - RETROFITTING A COMMERCIAL TRANSPORT	13
Partition Between Anti-Slosh Bulkheads	13
SECTION 4 - CONTAINMENT SYSTEM WEIGHT AND VOLUME COMPARISONS FOR BLADDERS, FOAM, AND NEW CONCEPT	16
Bladders	16
Foam	17
New Containment System	17
SECTION 5 - DISCUSSION OF SOME SIGNIFICANT FEATURES OF THE CONTAINMENT SYSTEM	18
Retrofit Costs	18
Compatibility with Existing Fuel System	18
Actuation of the System	19
Check-Out of the System	19
Optimizing the Operational Procedure	19

TABLE OF CONTENTS (Continued)

Page

REFERENCES 19

APPENDICES

A -- Excerpt from Reference 1, Crash Resistant Fuel Cell Installation Weights

B -- Specifications of Scott Foam Division's Reticulated Foam Products

LIST OF ILLUSTRATIONS

Figure		Page
1	Schematic of Wing Section with Upper Skin Removed	3
2	Wing Section Modified to Incorporate the Containment System	4
3	Flowthrough Openings Before Modificatons	5
4	Flowthrough Openings After Modifications	5
5	Access Panel with Air-Actuated Closure Device	6
6	Comparison of Pool Spillage Size	12
7	Partition Between Bulkheads	13
8	Details of Stringer and Bulkhead Design	14
9	Access Port Panel	15
10	Schematic of Wing and Fuel Tanks	16

LIST OF TABLES

Table		Page
1	Comparison of Results of Three Tests	9
2	Comparison of Three Tank Configurations	11
3	Comparison of Three Containment Concepts	18

EXECUTIVE SUMMARY

This report describes a new concept for containing fuel in fuel tanks of aircraft involved in survivable crashes. The concept involves the use of rapid response, hydraulic/air-actuated closures to seal passages between adjoining compartments in fuel tanks. With the closures in operation any fuel spillage can only come from the ruptured compartment or compartments, not from the entire fuel tank.

A prototype system was built and tested at the FAA Technical Center. Compared to alternate containment systems using fuel bladders or reticulated foam, the new concept incurs lower weight and volume penalties. Installation costs for retrofitting existing aircraft are expected to be significantly less than those incurred when using either reticulated foam or fuel bladders. This savings would result from the fact that no functional changes to the existing fuel system are required when the new containment system is added to the aircraft. If the concept was incorporated in the original design of a new aircraft, the costs could be significantly lower.

INTRODUCTION

PURPOSE.

The purpose of this report is to describe a new concept in aircraft fuel tank design which will reduce the spillage from an aircraft fuel tank which has been ruptured during what could be considered a survivable crash. The time element is very critical for survival after a crash. By reducing the amount of fuel spilled during the first minute after the aircraft comes to rest, the probability of passenger survival is greatly enhanced. This is the primary purpose of the fuel containment system described in this report. The report is divided into five sections:

Section 1 - Description of a full-scale fuel tank section which was modified to incorporate the components of the new concept. Description of the tests conducted on the modified tank and the results of those tests.

Section 2 - Comparison of the three configurations of an aircraft fuel tank, two of which incorporate the new concepts.

Section 3 - Brief discussion of the potential for retrofitting the concept into present day commercial carriers.

Section 4 - Comparison of the new concept's performance penalties relative to the penalties incurred when using either reticulated foam or bladders in fuel tanks.

Section 5 - Discussion of the various questions usually asked about any new system to be installed in an aircraft.

BACKGROUND.

Fuel fires are the major cause of fatalities in impact-survivable aircraft accidents. Fuel ejected from ruptured fuel tanks while the aircraft is still moving can form fine, readily ignitable mists. The remaining fuel, which spills from the tank after the plane comes to a stop, also constitutes a major potential fire hazard; and dealing with the spilled fuel is the subject of this report.

The Federal Aviation Administration (FAA) and other government agencies have conducted a significant amount of work on fuel containment during accidents. Most of this past work, however, is not applicable to modern, commercial transports owing to excessive weight, cost, or range/capacity penalties.

SECTION 1 - FUEL CONTAINMENT TESTS

DISCUSSION.

A report (reference 1) was published in 1987 which summarized the various concepts which have been considered for reducing the severity of postcrash fires. The essence of this work is contained in the title of the report, "Fuel Containment Concepts - Transport Category Airplanes." After analyzing the

various concepts presented, a new concept was developed which appears to minimize the penalties of weight and aircraft performance and yet offers considerable promise in reducing the postcrash fire size. The essence of the new concept is to apply the principles employed aboard a ship when the integrity of the ship's hull is threatened. Aboard a ship, when an accident occurs or enemy action causes damage, the various compartments of the ship are sealed off to isolate the damage. Thus, the idea is to keep the sea out of the compartments which are still intact and minimize and isolate the impact of the damage.

The same concept can be applied to an aircraft's fuel tanks. To demonstrate the feasibility of the concept, a series of tests were conducted at the FAA Technical Center during the summer and fall of 1988.

Fire is the major contributor to fatalities when an otherwise survivable aircraft crash occurs. There are two major factors in this type of situation which are the prime causes of the fatalities. One is the development of a fuel mist which occurs while the aircraft is still moving and fuel is released from a rupture in the fuel tank. The second factor is the fuel spilled from the ruptured fuel tank which results in a sizable pool of fuel on the ground under the aircraft when the aircraft comes to rest. This pool, if exposed to an ignition source can develop into a very large fire encompassing the aircraft. Thus, there are two problems to be solved: one, reduce or eliminate the fuel mist fireball; and two, minimize the size of the fuel spill and the potential fire size. The antimisting fuel (reference 2) can address the misting and fireball problem. The fuel spillage problem is the subject discussed in this report.

Over the years, a great deal of work has been done on methods (reference 1) to contain the fuel in a crash. Most of this work dealt with structural design of the wing and fuel tanks, frangible fittings for the fuel system, installation of bladders in the tanks to improve the containment of the fuel, and use of reticulated foam to impede the spill rate of the fuel. Some of the modifications have been implemented in specialized aircraft. For instance, helicopters have been using bladders and frangible fittings for about 15 years and have found that they perform quite well. However, most of the containment proposals over the years are not readily adaptable to typical commercial transport aircraft. The modifications which would be required would be prohibitive, either in weight, cost, or reduction in fuel capacity, thus reducing the maximum range of the aircraft.

This report describes a containment concept which would not penalize the aircraft performance to any significant extent and would not compromise existing fuel systems.

TEST APPARATUS.

To evaluate the concept under simulated conditions, a section of a Boeing 707 wing tank was used. This portion of the wing was a section with three compartments which were originally 60 percent of the number 3 wing tank of the aircraft. The general configuration of the section before modifications were made is shown in figure 1.

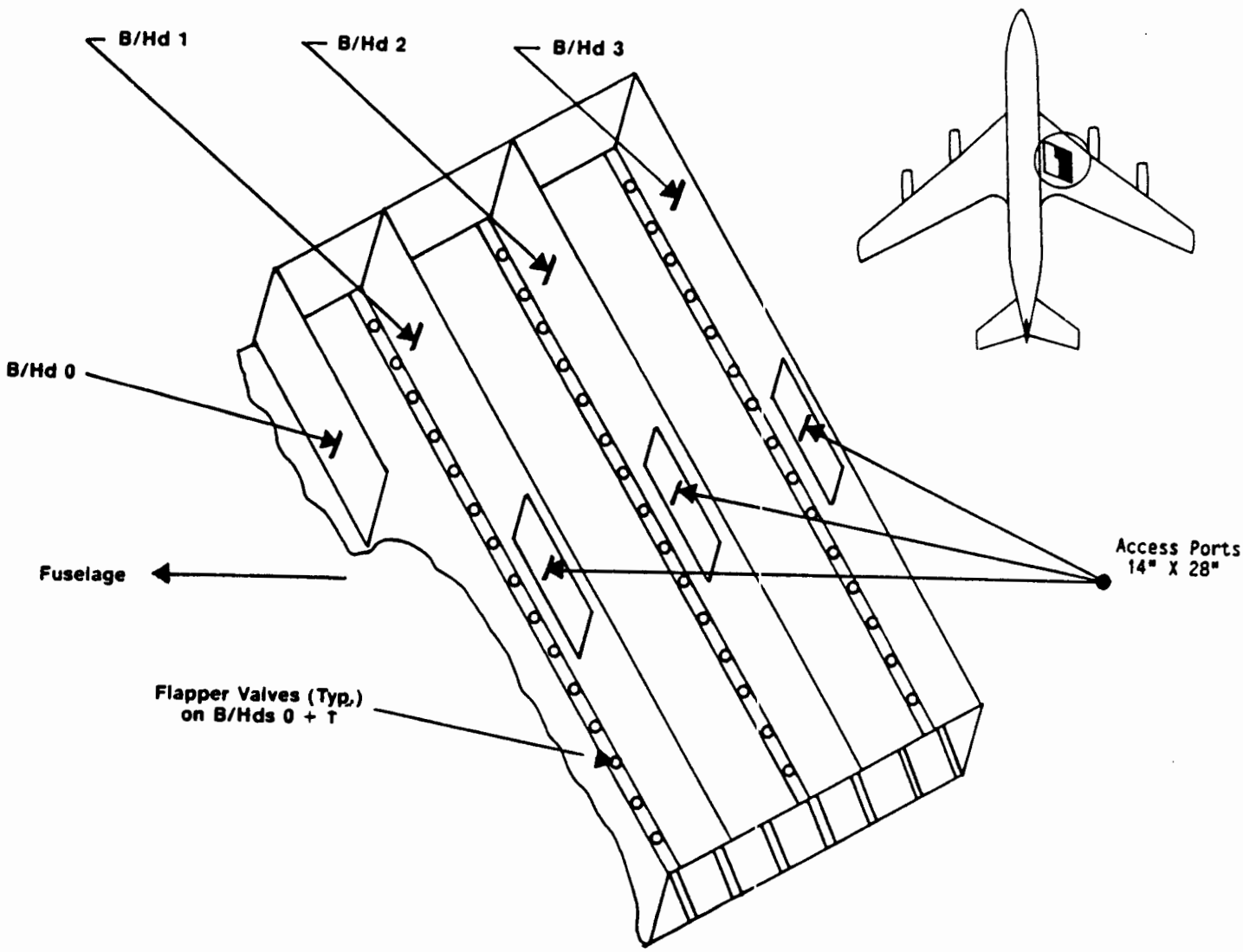

FIGURE 1. SCHEMATIC OF WING SECTION WITH UPPER SKIN REMOVED

Anti-slosh bulkheads 1,2, and 3 remained intact and part of anti-slosh bulkhead 0 also was intact. Bulkheads 0 and 1 had flapper valves at the bottom of the bulkhead between the stringers. These valves permitted fuel to flow from the outboard portions of the tank toward the inboard sections of the tank. However, when the aircraft would bank in turning, the flapper valves would close and prevent the fuel from flowing outboard and possibly causing pump cavitation. Bulkheads 2 and 3 did not have flapper valves; the space between the stringers at the bottom of the bulkheads was open. These openings were approximately 2 1/2 by 7 inches and there were approximately 18 in each bulkhead. The design of wing tank number 3 originally consisted of five compartments with four bulkheads, and the two inboard bulkheads were equipped with flapper valves. Each bulkhead also had a large access window to permit inspection and repair of the tank. These openings were 14 by 28 inch rectangles. Essentially, the wing tank is a large container with anti-slosh bulkheads and openings which permit fuel to flow freely throughout the tank. The flapper valves only have an impact on the movement of the fuel in the tank when the fuel level is below the level of the bulkhead access windows.

Figure 2 indicates the modifications to the wing section which were made to incorporate a portion of the containment system.

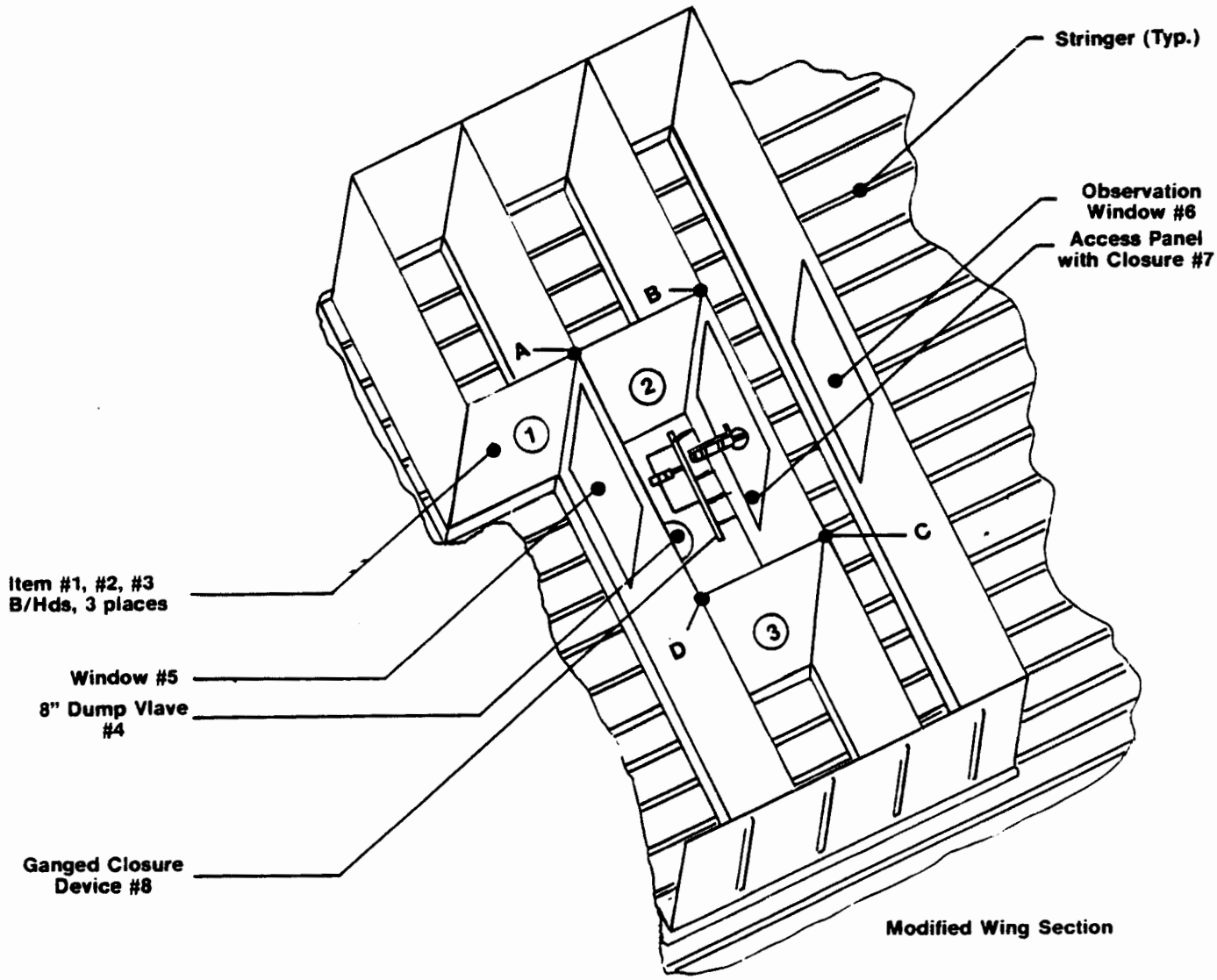

FIGURE 2. WING SECTION MODIFIED TO INCORPORATE THE CONTAINMENT SYSTEM

Items 1, 2, and 3 are spanwise bulkheads. Item 4 is an 8-inch-diameter valve installed in the lower skin of the tank. The 8-inch valve is used to simulate a rupture in the tank compartment. Items 5 and 6 are plexiglas windows installed in the access windows of the anti-sloshing bulkheads for purposes of observation during a test. Item 7 is an access panel with a closure device, and Item 8 is a ganged closure device which closes off the space between the stringers. Note: The area bounded by A B C D is the test section which is equipped with the containment system.

The 8-inch valve located in this compartment simulates a 50-in^2 rupture in a fuel tank when the valve is opened.

Details of the ganged closure device (Item 8) before and after modifications are shown in figures 3 and 4.

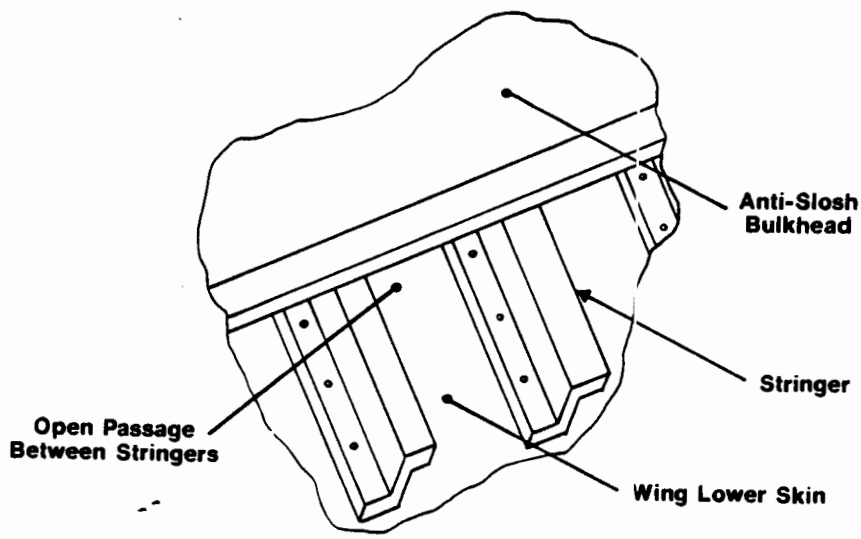

FIGURE 3. FLOWTHROUGH OPENINGS BEFORE MODIFICATIONS

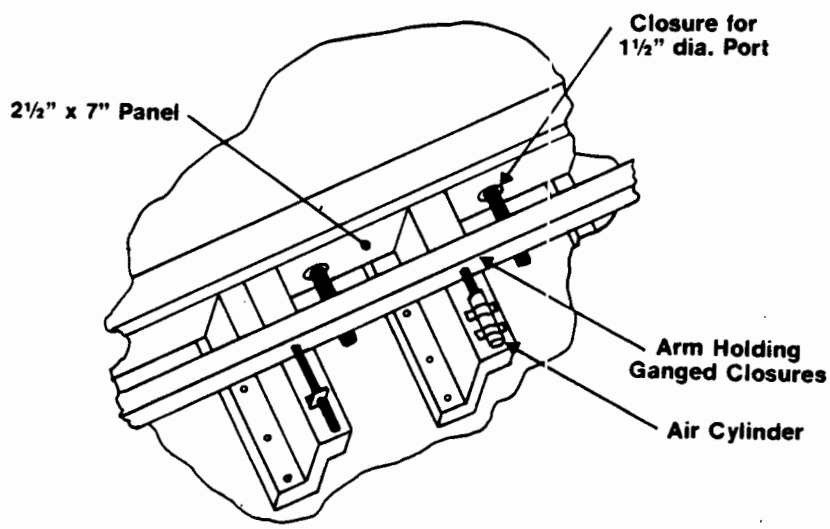

FIGURE 4. FLOWTHROUGH OPENINGS AFTER MODIFICATIONS

The design of an access panel air-actuated closure device (Item 7) is shown in figure 5.

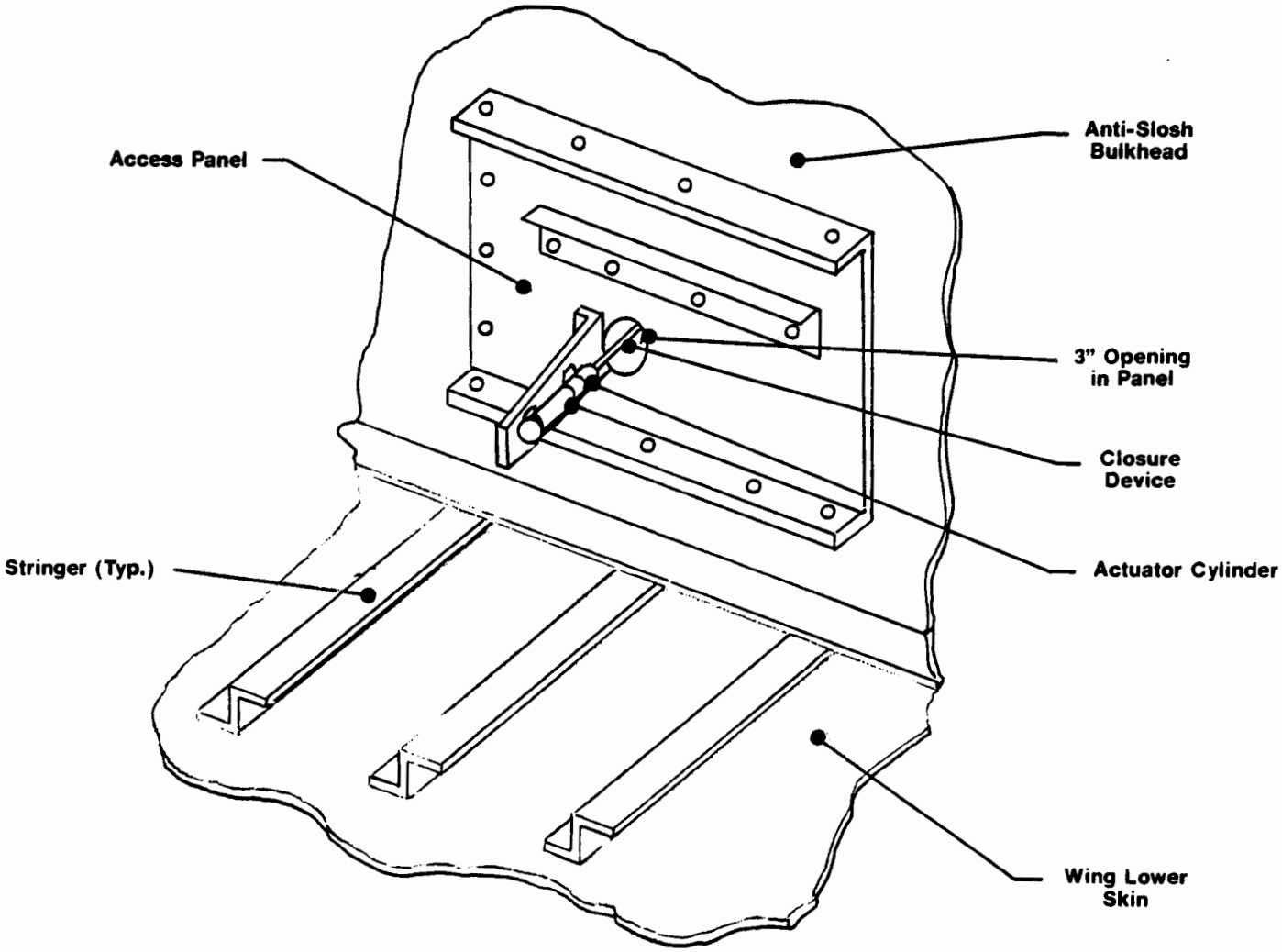

FIGURE 5. ACCESS PANEL WITH AIR-ACTUATED CLOSURE DEVICE

TEST INSTRUMENTATION.

In order to evaluate the performance of the system, some quantitative measurements are required. The tank in its wide open condition was filled with a known quantity of water. The water level in the tank can be related directly to the quantity of water in the tank. This measurement also indicates the head pressure which will drive the water from the tank when the 8-inch-diameter dump valve (simulating a tank rupture) is opened. The only other measurement required for the test was a timer to control the duration of the dump.

TEST PROCEDURES.

There are three test configurations to evaluate the performance of the containment system.

Test 1 - Unmodified Tank Configuration.

This test indicates the magnitude of spillage which would result in a pool with the present tank design and no modifications. The test is a simulation of a survivable crash wherein the wing tank is ruptured during a landing. There is an initial release of fuel from the ruptured tank while the aircraft is decelerating. The expected slide-out of the aircraft consumes approximately 7 seconds. When the aircraft comes to rest, a pool of spillage fuel develops under the aircraft; and during these tests the quantity of fuel spilled is measured.

1. The open system tank is filled with a known quantity of water.

2. Time is started when the 8-inch-diameter dump valve is opened.

3. At the end of 7 seconds, the dump valve is closed and the amount of water remaining in the tank is measured.

4. The 8-inch valve is then opened for 30 seconds, and after 30 seconds it is closed and the amount of fuel spilled during this period is recorded.

5. The 8-inch valve is reopened for 30 more seconds, and after 30 seconds it is closed and the amount of fuel spilled during this period is recorded.

6. The procedure described in step 5 is continued in 30-second increments until the tank is empty.

Test 2 - Modified Tank with Closures not Operating Configuration.

In this test, the open system tank has been modified to reduce the intercompartment flow by installing the port closure devices. However, the ports are in the open position. This differs from Test 1 insofar as in Test 1 there is a much greater flow area between compartments than in Test 2. For instance, the intercompartment flow area for Test 1 is 65 in^2 and it is only 16 in^2 for Test 2. The sizing of the intercompartment passages at 16 in^2 was made to assure that a sufficient quantity of fuel would be available to maintain normal aircraft and engine operation during all conditions of flight.

The test procedure for Test 2 is the same as for Test 1.

Test 3 - Modified Tank with Closures Operating Configuration.

In this test, the modified tank is in use and the closure devices of the containment system come into play.

1. The open system tank is filled with the same amount of water used in Test 1.

2. The 8-inch-diameter dump valve is opened, the containment system is activated, and the timer is started.

3. At the end of 7 seconds, the 8-inch valve is closed and the quantity of water still remaining in the containment compartment is determined.

4. With the containment system operating, the 8-inch valve is opened for 30 seconds. The valve is closed after 30 seconds and the quantity of fuel remaining in the containment compartment is determined.

5. If there is still some water in the containment section after 30 seconds, the 8-inch valve is opened again until the flow rate is reduced to a trickle, at which point the valve is closed and the time is recorded.

6. To determine the total quantity of water released, the containment system is opened, the water from the rest of the tank pours into the compartment, and a common level of water settles in the tank. The quantity of water still remaining in the overall tank is then read. The total amount of water released during the test and the amount released at the various time increments can be determined from the data. The quantity of water spilled during the 30-second period can be determined also by actually capturing the spillage in a container.

RESULTS AND ANALYSIS.

Test 1 - Unmodified Tank.

The tank was partially filled to a level corresponding to a volume of 690 gallons. The intercompartment passageways were all open, and the flow area into the test section was 59 in^2 when the water level was below the access windows in the anti-slosh bulkhead, and 67 in^2 when the level was above the access windows. The flow area of the 8-inch dump valve is 50.27 in^2.

During the 7-second initial spillage, which simulates the deceleration runout of the aircraft, the water level in the tank dropped corresponding to a spillage of 180 gallons during this 7-second period.

When the valve was reopened, the high spillage rate continued and the tank was essentially empty within 28 seconds. The modifying term "essentially" is used because there was some water still in the tank trapped between stringers. This water can drain between stringers only through 1/4-inch-diameter holes in the base of the stringers. These drain holes are provided by the manufacturer to permit a tank to be completely drained.

The total spillage during the 28-second period was 510 gallons, less the quantity of water trapped between stringers. This trapped quantity of water was estimated at 6.25 gallons.

The calculated equivalent circular pool for a spillage of this magnitude (510 gallons) onto a nonporous surface, assuming a 1/16-inch depth would be 130 feet in diameter.

Test 2 - Modified Tank with Closures not Operating.

In this test, the tank was filled to a level corresponding to 690 gallons of water. The intercompartment passageways were modified and the actual flow area into the test compartment was reduced to 13.2 in^2. The closure devices in the containment system were not operated during this test.

During the 7-second runout period, the level in the test compartment dropped, but the quantity of water spilled could not be ascertained until the water level in the tank stabilized. The quantity of runout spillage was determined to be 125 gallons. When opening the 8-inch valve with all the closures in the open position, the water level in the tank indicated that 565 gallons were initially in the tank. Opening the 8-inch valve and with the closures in the open position the quantity of spillage in 30 seconds was 97 gallons.

During the next 30 seconds, the spillage was 91 gallons. The flow rate through the intercompartment passages was 3.2 gallons per second initially, and this was the rate for the spillage through the dump valve.

Therefore, at the end of the first 30 seconds (30 seconds was used to directly compare Test 2 to Test 1) the spillage was 97 gallons. The calculated equivalent circular pool for a spillage of this magnitude onto a nonporous surface, assuming a 1/16-inch depth, would be 56.3 feet in diameter.

Test 3 - Modified Tank with Closures Operating.

In this test, the tank was filled to the level corresponding to 690 gallons of water. The intercompartment passageways, when open, have a flow area 13.2 in^2. When the closure devices are actuated, the leakage into the test compartment is at the rate of 0.12 gallons per second.

During the 7-second runout period, the test compartment was emptied except for the water trapped between the stringers. During the first 30-second period, the spillage was 2.64 gallons. This is attributable to the leakage around the closure devices and the small drainage ports. The calculated equivalent circular pool for a spillage of this magnitude onto a nonporous surface, assuming a 1/16-inch depth, would be 9.29 feet in diameter.

Table 1 compares the results of the three tests.

TABLE 1. COMPARISON OF RESULTS OF THREE TESTS

Test Number	7-Second Runout Spillage	30-Second Spillage	Calculated Equivalent 30-Second Spillage Pool Diameter	Calculated Equivalent 30-Second Pool (Spillage Area)
1 Unmodified Tank	180 gallons	510 gallons	130 feet	13273 ft^2
2 Modified Tank with Closures not Operating	125 gallons	97 gallons	56.3 feet	2489 ft^2
3 Modified Tank with Closures Operating	104 gallons	2.64 gallons	9.29 feet	67 ft^2

SUMMARY OF RESULTS.

The performance of the containment system relative to the unmodified tank indicates that the containment system design concept with the closure devices in the open condition (Test 2) reduces the spillage approximately 80 percent. When the containment system is in operation (Test 3), the pool spillage is reduced to a level only 0.73 percent as great as the spillage from an unmodified tank.

The effectiveness of the containment system in spillage reduction is very apparent from the results of these tests. The practicality of the concept and its application to existing aircraft are discussed in the following sections of this report.

SECTION 2 - COMPARISON OF THE THREE TANK CONFIGURATIONS CONTAINMENT CAPABILITIES

Section 1 dealt with the performance of the test article which was a modified portion of a single fuel tank. Section 2 outlines the containment performance calculations for a complete aircraft fuel tank when modified to incorporate the components of the new containment system.

Table 2 and figure 6 show a comparison of three tank configurations. The conditions for the performance comparison are:

1. The capacity of the tank is 3000 gallons of fuel.

2. Twelve (12) equal compartments or 250 gallons per compartment.

3. The size of the break in the tank is 1.5 ft^2 (16.6-inch-diameter hole).

4. The average height of the fuel in the tank is 0.5 feet. The average velocity through the rupture is therefore 5.075 feet/second. If the aircraft is landing with 1 foot of fuel in the ruptured tank, the average hydrostatic pressure during the spill is approximately equivalent to a 0.5 foot head.

5. The closure device leakage rate is 1.11 pounds of fuel/second.

6. The area of the intercompartment passages when the containment system is installed is 16 in^2 with the closure devices in the open position. The sizing of the intercompartment passages was based on the requirement that the flow into the compartment must be sufficient to maintain a four-engine fuel demand at maximum takeoff power (57,600 pounds fuel per hour.)

7. The unmodified tank has an unrestricted flow area between bulkheads equal to 2.2 ft^2.

CONFIGURATION 1 - UNMODIFIED TANK.

The tank contains 3000 gallons; and during the 7-second runout of the aircraft, a total of 2660 pounds fuel or 410 gallons would be spilled. During the next 44 seconds, the balance of the fuel (2590 gallons) would be spilled.

CONFIGURATION 2 - THE COMPARTMENTED TANK WITH THE CONTAINMENT SYSTEM NOT OPERATING.

The original 250 gallons in the ruptured compartment would be spilled in 4.26 seconds. When the aircraft comes to rest, the flow through the 16 in^2 intercompartment passages is at the rate of 28.2 pounds/second. After 44 seconds, 1240 pounds of fuel (or 191 gallons) would be spilled.

CONFIGURATION 3 - THE COMPARTMENTED TANK WITH THE CONTAINMENT SYSTEM OPERATING.

The original 250 gallons in the ruptured compartment would be spilled in 4.26 seconds. When the aircraft comes to rest, the flow into the compartment would only be the closure leakage flow of 1.11 pounds/second. Thus, after 44 seconds, the total spillage contributing to a pool fire would be 5.85 gallons or 48.84 pounds of fuel.

TABLE 2. COMPARISON OF THREE TANK CONFIGURATIONS

Tank Configuration	Total Aircraft Runout Spillage	Total Pool Spillage in 44 Seconds
#1 Unrestricted Flow Within Tank	410 gallons (7 second runout)	2590 gallons (Tank is empty after 44 seconds)
#2 Compartmented Tank with Containment System not Operating	250 gallons (Compartment is empty after 4.26 seconds)	191 gallons (After 44 seconds to directly compare to #1)
#3 Compartmented Tank with Containment System Operating	250 gallons (Compartment is empty after 4.26 seconds)	5.85 gallons (After 44 seconds the estimated leakage around closure devices)

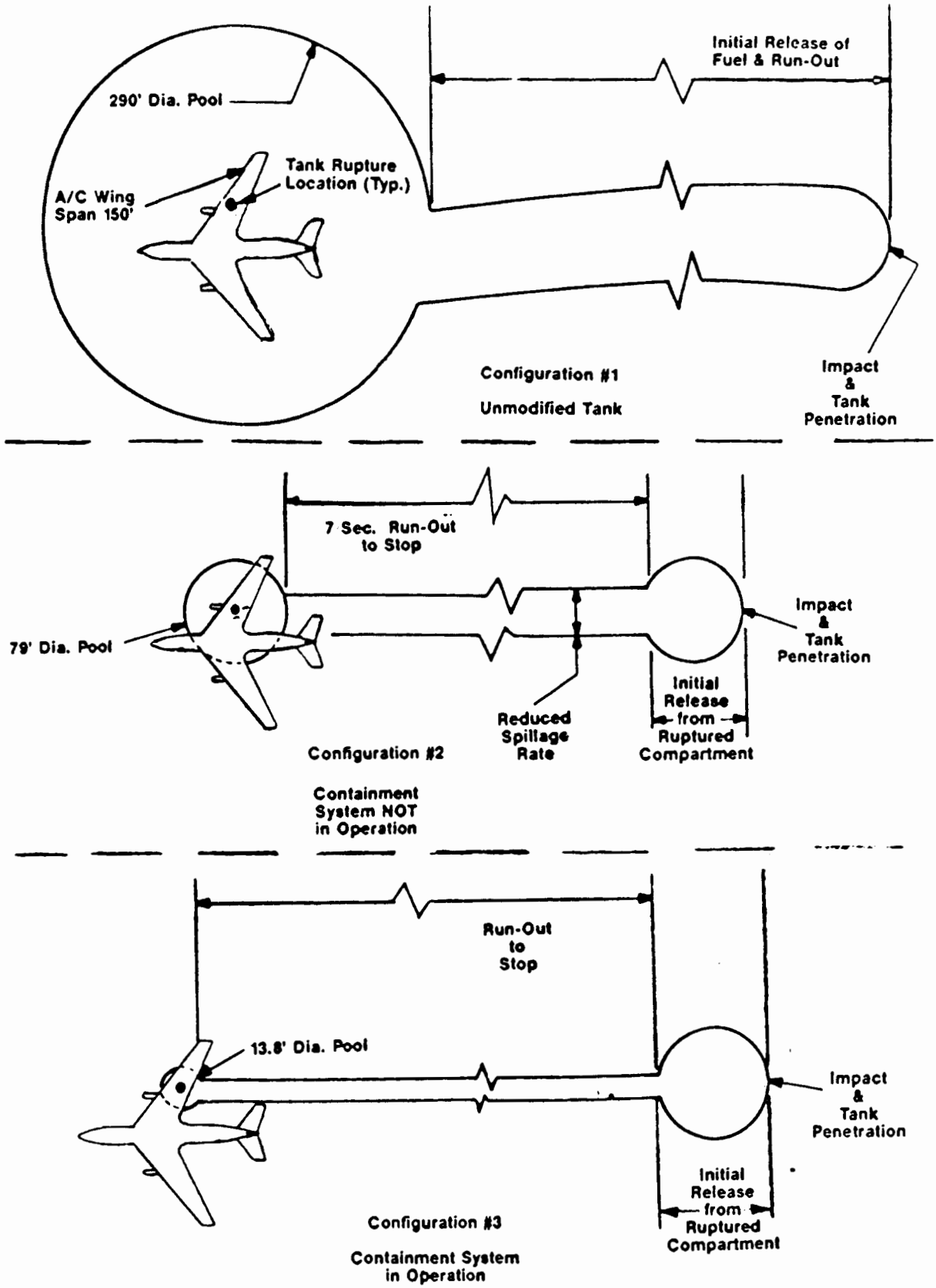

FIGURE 6. COMPARISON OF POOL SPILLAGE SIZE

SECTION 3 - RETROFITTING A COMMERCIAL TRANSPORT

In applying the principles involved in the containment system to an actual commercial transport, the following steps would be taken.

1. Detail drawings of the wing tanks would be used to determine the exact dimensional requirements for fabricating the compartment partitions which would be installed between the anti-slosh bulkheads.

2. Any tubing or unusual features which would interfere with the installation of the partitions would be considered in fabricating the partitions.

3. The actuator system and its support devices would be assembled prior to fabrication of the partitions.

4. The partition complete with its gaskets, actuator, and closure device would be assembled as a unit prior to installation in the aircraft.

PARTITION BETWEEN ANTI-SLOSH BULKHEADS.

The typical partition would look something like figure 7 when assembled prior to installation. The partition when installed is sealed at the bottom and the two sides. It is not sealed to a stringer on the upper part of the wing. A 2- or 3-inch gap is left at the top to assure that the normal venting of the tank can take place and also to assure that the aircraft refueling rate is not compromised.

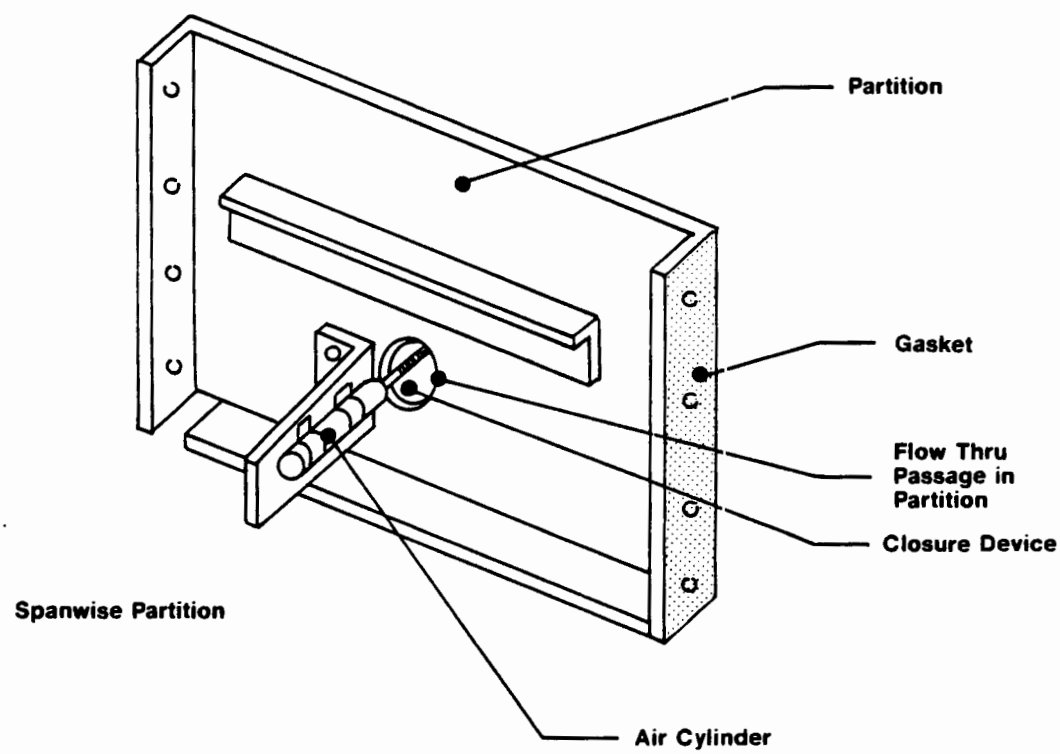

FIGURE 7. PARTITION BETWEEN BULKHEADS

The general configuration of the aircraft tank design incorporates a strengthened skin as a structural member. The skin/bulkhead is designed as shown in figure 8 for three of the five bulkheads in the inboard tanks.

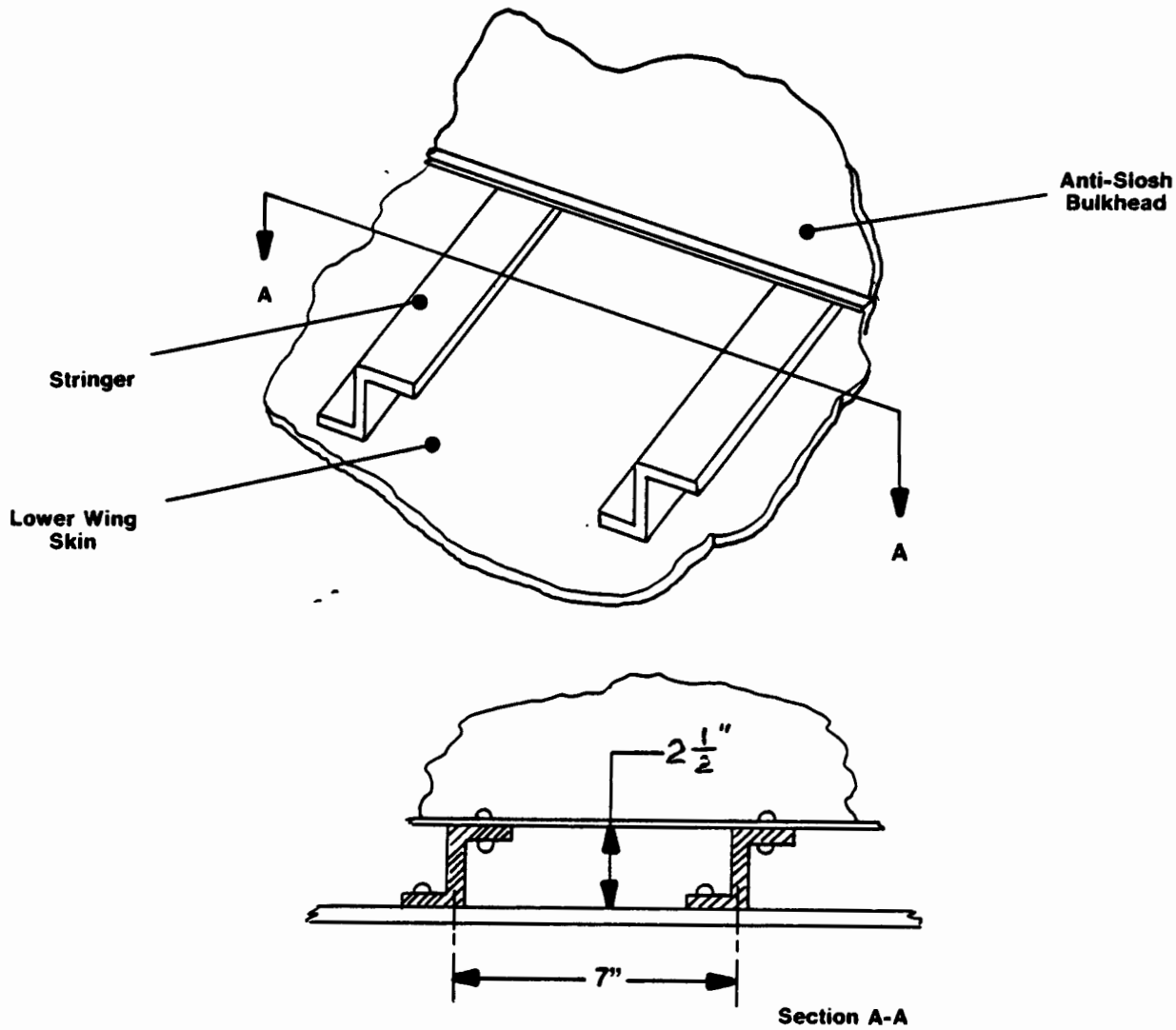

FIGURE 8. DETAILS OF STRINGER AND BULKHEAD DESIGN

There is a passage (2 1/2 inches high and 7 inches wide) between the anti-slosh bulkheads and the lower wing skin to permit fuel to flow freely between each pair of stringers. Essentially, the present tank design does not restrict the flow within the tank. The flow area between sections of the tank divided by an anti-slosh bulkhead is about 2.2 square feet.

The access ports in each anti-slosh bulkhead which are designed to permit mechanics to enter the tank and make repairs or replace components are approximately 14- by 28-inch openings. These openings would be sealed by panels designed for easy installation and removal. The installation would vary depending on the particular bulkhead. Figure 9 shows a typical design.

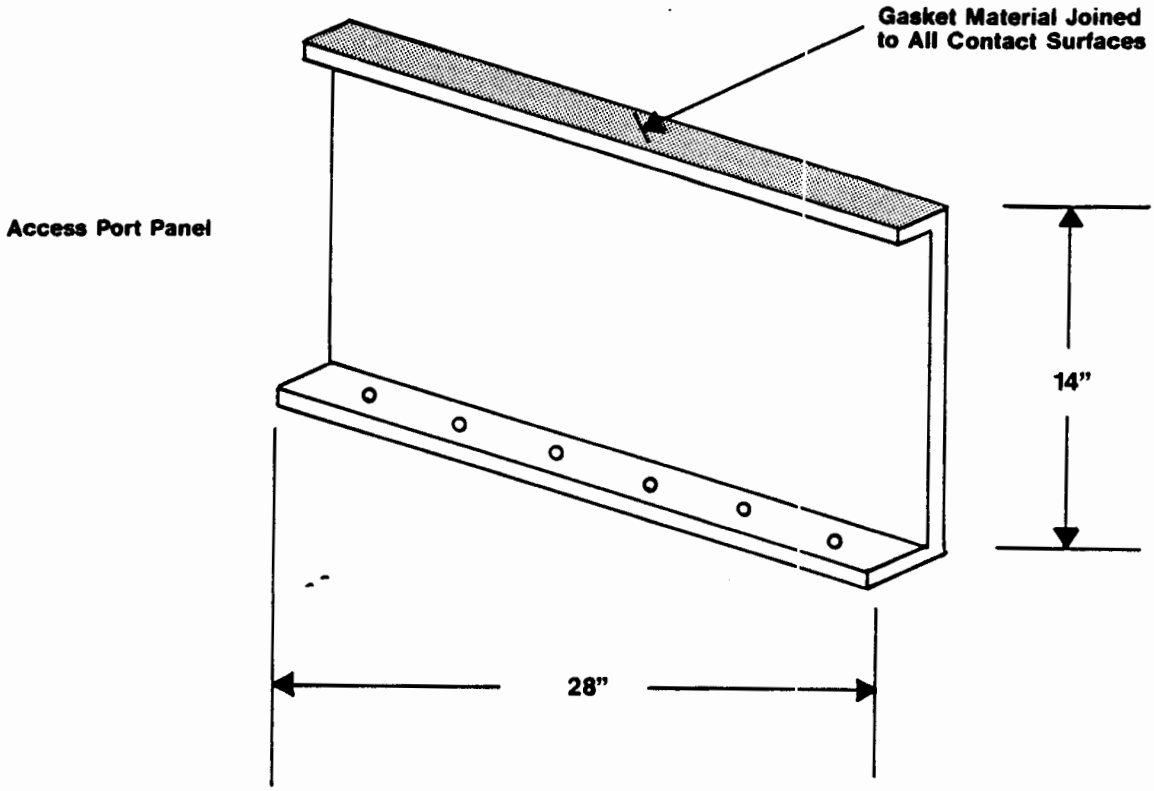

FIGURE 9. ACCESS PORT PANEL

SECTION 4 - CONTAINMENT SYSTEM WEIGHT AND VOLUME COMPARISONS FOR BLADDERS, FOAM, AND NEW CONCEPT

A comparison of the approaches usually considered when addressing the containment problem proves to be very pertinent. The methods which are usually advanced are crash resistant fuel cells (bladders) and reticulated foam. In order to compare these systems, the following aircraft wing design is used as a standard.

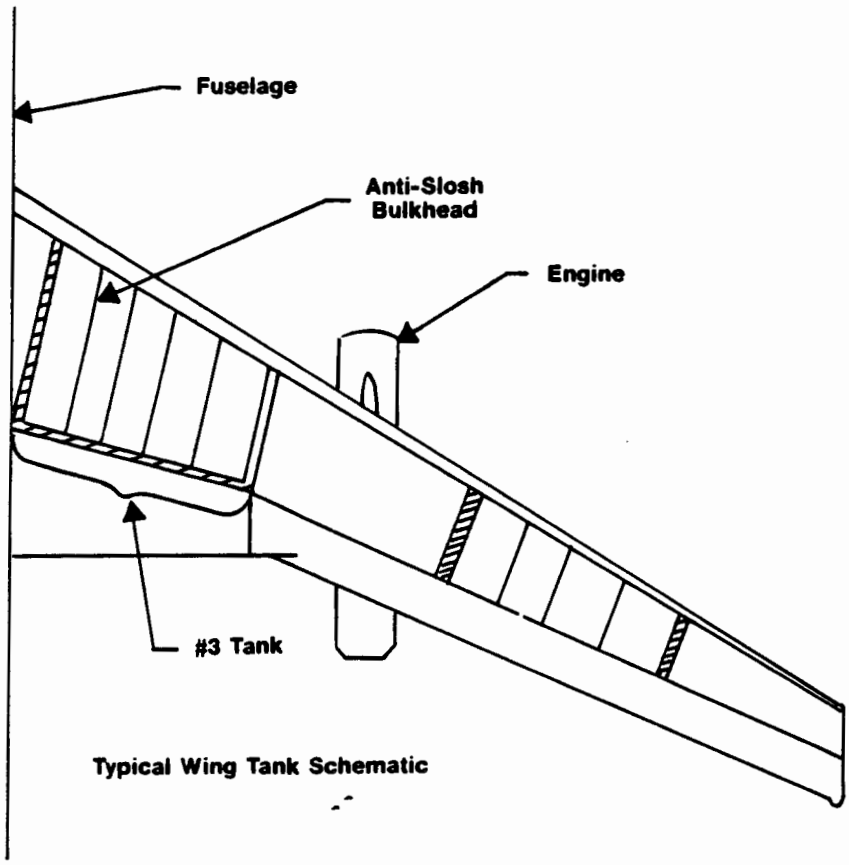

Assume the average chord in No. 3 tank is 13 feet and the distance between bulkheads is 3 feet and the average height of a bulkhead 2.5 feet.

FIGURE 10. SCHEMATIC OF WING AND FUEL TANKS

The height of the stringers which stiffen the wing is 2.5 inches. The total volume of tank No. 3 is 15 x 13 x 2.5 feet or 487.5 ft^3 or 3646 gallons (or 23,700 pounds fuel). The total volume of tanks No. 1 through No. 4 is therefore (487.5)2+(487.5)2(0.7) = 1657 ft^3 containing 13,818 gallons. (Tanks No. 1 and No. 4 are approximately 30 percent smaller than tanks No. 2 and No. 3).

BLADDERS.

With bladders which would be installed in the five compartments of tank No. 3, the total surface area of the bladders is 790 ft^2. Tank No. 2 also uses 790 ft^2 and tanks No. 1 and No. 4 would use 70 percent of this figure. The total surface area of the bladders would be 2586 ft^2. The typical weight of the bladder material is 1.5 pounds/ft^2 (appendix A) and the total weight therefore would be 3879 pounds.

The displaced volume when using the bladders is:

(2586 x 0.1875 x 1/12) + (13 x 15 x 0.4167)2 + (13 x 15 x 0.4167)2(0.7) = 316.6 ft^3. This volume reduces the aircraft fuel capacity by 2639 gallons, equivalent to a 19.1 percent fuel capacity reduction.

FOAM.

The reticulated foam has a density of approximately 1.5 pounds/ft^3 (appendix B). The total volume of tanks No. 1 through No. 4 is 1657 ft^3 (or 13,818 gallons). The weight of the foam therefore is 2486 pounds.

The foam displaces 2.5 percent of the tank volume, and the foam also retains 2.5 percent of the fuel. The useful volume penalty when using foam is (0.05) (1657) = 82.85 ft^3 or 690 gallons.

NEW CONTAINMENT SYSTEM.

The system as installed in the test section of the 707 wing provides a basis for estimating the total weight and range penalty for a complete aircraft.

1. There would be a total of 34 spanwise bulkheads approximately 3 feet by 2 feet by 1/16 inch equivalent to 54 in^3/bulkhead or 1.0625 ft^3 for 34 bulkheads. The volume of stiffeners and flanges designed to withstand fuel "inertia" forces would add approximately 50 percent more cubic feet (or 0.53 ft^3).

2. The weight of actuators, hardware, valves, controls, and tubing would be 2 pounds per actuator and accessories, or 73.4 pounds total.

3. The panels in the access windows would be 28 by 16 by 1/16 inches and there would be 14 of these for a total of 0.23 ft^3.

4. Closures between the stringers (2 1/2 by 7 by 1/16 inches) are required in tanks No. 2 and No. 3, and 31 closures are required in tanks 1 and 4. The total weight for these closures is 16 pounds and the total displaced volume is 0.1 ft^3.

The overall total for the system when installed in all the wing tanks would be [1.0625 + 0.53 + 0.23 + 0.1] 169 + 73.4 = 399 pounds total.

The fuel displaced by the system would be 1.924 ft^3 plus the volume of various items such as actuators, valves, tubing, etc., which is approximately an additional 0.7 ft^3. The total volume displaced, therefore, is 2.624 ft^3. This would result in a total fuel capacity penalty of 21.9 gallons.

It should be noted that no attempt at minimizing the weight of the concept has been made at this point. Conceivably the estimates shown here might be reduced by approximately one-third.

The summary of the characteristics and performance of the three concepts for containment is shown in table 3.

TABLE 3. COMPARISON OF THREE CONTAINMENT CONCEPTS

Concept	Displaced Volume	Weight of System	Calculated Reduction in Fuel Capacity
Bladders	316.6 ft^3	3879 lbs.	2369 gallons (19.1% reduction)
Foam	82.85 ft^3	2486 lbs.	690 gallons (5% reduction)
New System	2.624 ft^3	399 lbs.	21.9 gallons (0.16% reduction)

SECTION 5 - DISCUSSION OF SOME SIGNIFICANT FEATURES OF THE CONTAINMENT SYSTEM

The analysis of the tests conducted to evaluate the new containment system concept indicates that it is very effective in reducing the pool spillage area when a damaged aircraft comes to rest. This however, is only one facet of the containment problem. The other major considerations are:

1. What are the costs involved in retrofitting existing aircraft?

2. Is the system compatible with the existing aircraft fuel system?

3. What would be the consequences of inadvertent actuation of the system?

4. Can the system be checked to assure that it is operational?

5. What approach should be used to optimize the operational procedure?

RETROFIT COSTS.

At this point it would be impossible to make an estimate of the retrofit costs for labor. However, it is essentially a design change and off-the-shelf purchase of the required components. The material and components required to retrofit a complete aircraft should not exceed $5,000.

COMPATIBILITY WITH EXISTING FUEL SYSTEM.

Since the components of the system are all aluminum, steel, and tubing compatible with Jet A fuel, there should be no problems with compatibility.

The existing fuel system is not impacted by installing the system since it is a passive concept and is only operated on demand.

ACTUATION OF THE SYSTEM.

If the system is actuated and the various compartments are sealed off due to inadvertent action, a warning light could alert the pilot and the system could be returned to normal in a fraction of a second.

CHECK-OUT OF THE SYSTEM.

The system could be checked before takeoff or at any time by actuating the various closure devices in the compartments. It is not essential that each compartment be perfectly sealed in order to be effective. Each closure slide would be capable of sealing off at least 98 percent of the potential flow through any opening. This would greatly reduce the spillage rate. The various bulkheads and panels can be designed for easy removal for inspection purposes.

OPTIMIZING THE OPERATIONAL PROCEDURE.

The actual operating procedure to be used with the containment system described in this report is not defined at this time. This is because the potential users of the system would have to evaluate the various potential operational procedures. It might be advantageous to have the system actuated only in an emergency situation (for instance, when a wheels-up landing is imminent) or it might be desirable to actuate the system during all takeoffs and landings. There are pluses and minuses for each method, but this aspect of the system's use is best left to a more detailed analysis for specific aircraft types and an evaluation by experts in flight operations. The system should be fail-safe in the open position. If for some reason the air or hydraulic pressure to the actuators is lost, the spring-loaded actuators could hold the closure devices in the open position.

The essential features of the containment concept are outlined here, but the detail design of the installation and controls would be developed through extensive study and analysis.

REFERENCES

1. Wittlin, G., Fuel Containment Concepts - Transport Category Airplanes, Lockheed-California Company, FAA Report No. DOT/FAA/CT-87/18, November 1987.

2. Yaffee, M., Antimisting Fuel Research and Development for Commercial Aircraft - Final Summary Report, FAA Report No. DOT/FAA/CT-86/7, April 1986.

APPENDIX A

EXCERPT FROM REFERENCE 1, CRASH RESISTANT FUEL CELL INSTALLATION WEIGHTS

Total weight for cell installations based on these materials as well as comparable weights for an installation based on two separate tank responses are given in table 3. Also shown is the loss of fuel capacity resulting from the cell installation.

TABLE 3. CRASH RESISTANT FUEL CELL INSTALLATION WEIGHTS

	Based on Single Tank Response		Based on Two Tank Response	
Weight Item	Optimum Cell Material 1.60 lb/ft2	Probable Cell Material 2.55 lb/ft2	Optimum Cell Material 1.20 lb/ft2	Probable Cell Material 1.90 lb/ft2
Cell Material (936 ft2)	1500	2400	1120	1780
*Fitting Weight (3 x present U.S. Rubber fittings	230	250	220	240
Attachments (nuts, bolts, etc.)	60	60	60	60
Tank Liner (2 x present thickness + 100% for stiffening & Structure	750	750	750	750
Access Doors & Structural Revision	400	400	400	400
TOTAL:	2940	3860	2550	3230

*Average Number of Fittings/Cells = 10 (vent and fuel interconnects, doors, etc.)

Average Number of Fittings/End Cells = 8 (vent and fuel interconnects, access doors, etc.)

Miscellaneous Fittings, One each Total = 4 (tank inlet, outlet, capacitant units, etc.)

TOTAL = 116

<u>INSTALLATION FUEL LOSS</u>: Internal Tank Capacity = 26,100 lbs. - 4015 gal.
Bladder Cell Capacity = 20,670 lbs.
Capacity Loss = 5,430 lbs. - 835 gal.

<u>20.8% reduction</u> in useful fuel capacity

APPENDIX B

SPECIFICATIONS OF SCOTT FOAM DIVISION'S RETICULATED FOAM PRODUCTS

Mil-B-83054-B	COARSE PORE TYPES*			FINE PORE TYPES*	
Property	Type I	Type II	Type IV*	Type III	Type V
Color	Orange	Yellow	Dark Blue	Red	Light Blue
Polyol Type	Polyester	Polyester	Polyether	Polyester	Polyether
Density Range (lb/ft^3)	1.70-2.00	1.20-1.45	1.20-1.45	1.20-1.45	1.20-1.45
Porosity pore size (PPI)	7-15	8-18	8-18	20-30	20-30
Air Pressure Drop (inches of water)	0.190-0.285	0.140-0.230	0.14-0.230	0.250-0.330	0.250-0.330
Tensile Strength (Psi) Min.	15	15	10	15	15
Tensile Strength at 200% elongation (Psi) min.	10	10	-	10	-
Ultimate Elongation (%) min.	220	220	100	220	100
Tear Resistance (lb. per inch) min.	5	5	3	5	3
Constant Deflection compression set (%) max.	30	35	30	35	30
Compression load deflection at 25% deflection (Psi) min.	0.40	0.30	0.35	0.30	0.35
65% deflection (Psi) min.	0.60	0.50	0.60	0.50	0.60
Fuel displacement (max. Vol. %)	3.0	2.5	2.5	2.5	2.5
Fuel retention (max. Vol. %)	2.5	2.5	2.5	4.5	4.5
Flammability (inches/minute) max.	10	15	15	15	15
Extractable materials (Wt. %) max.	3.0	3.0	3.0	3.0	3.0
Low Temperature flexibility (-55°F)	NO CRACKING OR BREAKING OF STRANDS				
Entrained solid contamination (Milligrams/ft^3) Max.	11.0	11.0	11.0	11.0	11.0
Steam autoclave exposure (% Tensil Loss) max.					
Type I, II, III 5 Hrs. @ 250°F	40	40	-	40	-
Type IV & V 10 Hrs. @ 250°F	-	-	30	-	30

* Above sequence of types I, II, IV, III and V facilitates comparison of ester and ether types