CT
TN
81
39

technical note

COPY 1

FEDERAL AVIATION ADMINISTRATION
TECHNICAL CENTER LIBRARY
ATLANTIC CITY INT'L ARPRT, NJ 08405

ILS/MLS Comparison Tests at Miami/Tamiami, Florida Airport

John Townsend

July 1989

DOT/FAA/CT-TN89/39

This document is available to the U.S. public through the National Technical Information Service, Springfield, Virginia 22161.

U.S. Department of Transportation
Federal Aviation Administration

Technical Center
Atlantic City International Airport, N.J. 08405

FAA WJH Technical Center
Tech Center Library
Atlantic City, NJ 08405

AVAILABLE IN
ELECTRONIC FORMAT

FAA Technical Center
00016126

FAA
TECHNICAL CENTER
Atlantic City, N.J.

NOTICE

This document is disseminated under the sponsorship of the U.S. Department of Transportation in the interest of information exchange. The United States Government assumes no liability for the contents or use thereof.

The United States Government does not endorse products or manufacturers. Trade or manufacturers' names appear herein solely because they are considered essential to the objective of this report.

Technical Report Documentation Page

1. Report No. DOT/FAA/CT-TN89/39	2. Government Accession No.	3. Recipient's Catalog No.
4. Title and Subtitle ILS/MLS COMPARISON TESTS AT MIAMI/TAMIAMI, FLORIDA AIRPORT		5. Report Date July 1989
		6. Performing Organization Code ACD-330
7. Author(s) John Townsend		8. Performing Organization Report No. DOT/FAA/CT-TN89/39
9. Performing Organization Name and Address U. S. Department of Transportation Federal Aviation Administration Technical Center Atlantic City International Airport, N.J. 08405		10. Work Unit No. (TRAIS)
		11. Contract or Grant No. T0604L
12. Sponsoring Agency Name and Address U. S. Department of Transportation Federal Aviation Administration Maintenance and Development Service Washington, D.C. 20590		13. Type of Report and Period Covered Technical Note
		14. Sponsoring Agency Code
15. Supplementary Notes		

16. Abstract

A series of flight tests were performed by the Federal Aviation Administration (FAA) Technical Center at the Miami/Tamiami, Florida Airport, to compare the course quality of an instrumented landing system (ILS) with a collocated Microwave Landing System (MLS). The Technical Center's test bed MLS was transported to and collocated with the commissioned category I ILS on runway 9R at Tamiami. The flight data that was collected indicate that the MLS has less scalloping than the ILS and the MLS azimuth is unaffected by overflight interference.

17. Key Words Instrument Landing System (ILS) Microwave Landing System (MLS) Miami/Tamiami Airport		18. Distribution Statement This document is available to the U.S. public through the National Technical Information Service, Springfield, Virginia 22161.	
19. Security Classif. (of this report) Unclassified	20. Security Classif. (of this page) Unclassified	21. No. of Pages 20	22. Price

Form DOT F 1700.7 (8-72) Reproduction of completed page authorized

ACKNOWLEDGEMENTS

Without the outstanding cooperation and assistance from the following organizations and personnel, it would not have been possible to conduct these tests in the time alloted:

Tamiami Airport Manager's Office, Mr. Clair Sherrick, Manager

Tamiami Sector Field Office, Mr. Carl Rubino, Manager

Miami Sector Field Office, Mr. George Priest, NAVAIDS Supervisor

Miami Sector Field Office personnel particularly Mr. Juan Rodriquez

Air Traffic personnel from Tamiami Tower and Miami Approach Control

Dade County Airport Department

TABLE OF CONTENTS

	Page
EXECUTIVE SUMMARY	ix
BACKGROUND	1
TEST PROCEDURES	1
RESULTS AND ANALYSIS	2
RESULTS AND CONCLUSIONS	2

LIST OF ILLUSTRATIONS

Figure		Page
1	Drawing of MLS Azimuth and Elevation Stations	3
2	Localizer and Azimuth Locations	4
3	Glide Slope and Elevation Locations	5
4	Localizer Error Plot for a Centerline Approach	6
5	Azimuth Raw Error Plot for a Centerline Approach	7
6	Localizer Error Plot for a Second Centerline Approach	8
7	Azimuth Raw Error Plot for a Second Centerline Approach	9
8	Glide Slope Error Plot for a Centerline, 3° Approach	10
9	Elevation Raw Error Plot for a Centerline, 3^{c} Approach	11
10	Glide Slope Error Plot for a Second Centerline, 3° Approach	12
11	Elevation Raw Error Plot for a Second Centerline, 3° Approach	13

EXECUTIVE SUMMARY

A series of tests were performed at the Miami/Tamiami, Florida Airport, to compare the course quality of an instrumented landing system (ILS) with a collocated microwave landing system (MLS). The Technical Center's test bed MLS was transported to and collocated with the commissioned category I ILS on runway 9R at Tamiami. The flight data that were collected indicate that the MLS has less scalloping than the ILS and the MLS azimuth is unaffected by overflight interference.

BACKGROUND

During the period March 24-27, 1989, series of tests were performed at the Miami/Tamiami, Florida Airport to compare the course quality of an instrument landing system (ILS) with a collocated microwave landing system (MLS). These ILS/MLS comparison tests were part of a series of tests performed at Tamiami during March which included verifying ILS/MLS collocation standards as well as a demonstration of MLS Area Navigation (RNAV) capability.

Tamiami Airport is located approximately 5 miles southwest of Miami and is operated by the Dade County Airport Department. The airport has very flat terrain and is a general aviation airport with very high traffic volume. The ILS, which consists of an 8-element log periodic localizer array and a null reference glide slope array, services runway 9R which is 5,000 feet in length and 150 feet wide. It is a category I commissioned facility. The Federal Aviation Administration (FAA) Technical Center Test Bed MLS, which consists of a Bendix 2° beamwidth azimuth station and a 1.5^{o} beamwidth elevation station, was collocated with the ILS in accordance with the proposed amendments to attachment G to part I of the International Civil Aviation Organization (ICAO) Annex 10 for these tests. Figure 1 is a drawing of the MLS azimuth and elevation stations used in these tests.

TEST PROCEDURES

The localizer is sited, on the runway centerline extended, 1784 feet beyond the stop end of the runway. The MLS azimuth was installed with the rear of the shelter 200 feet in front of the localizer and was symmetrical about the centerline extended. Figure 2 is a drawing of the localizer and azimuth locations. The glide slope is sited 1025 feet back from threshold and 324 feet to the right (as seen by the pilot on an approach) of runway centerline. The elevation station was installed to place the front of the antenna 906 feet from threshold and 274 feet to the right of centerline. This location was to the runway side of a line from the glide slope antenna to the runway centerline at threshold and provided for coincident threshold crossing heights between the glide slope and elevation systems. Figure 3 shows the locations of the glide slope and elevation antennas.

All of the data collected were airborne data using a fully instrumented Convair 580 (CV-580). A Bendix ML-201A MLS receiver was used to collect the MLS data; a Bendix RNA-34AF navigation receiver was used to collect the localizer and glide slope data. Both of these receivers output both analog and digital data. The aircraft tracking was performed using a Warren Knight balloon theodolite and a JC Air FM radio telemetric theodolite (RTT). DME ranging data, for reference information only, was collected using an E-Systems DME/P located near the azimuth and localizer. Both analog (strip chart recorder) and digital (Kennedy 9-track recorder) data were collected. The analog was used for real time "quick look" information while the digital data was processed post flight and is used in this report.

The MLS azimuth was installed to have the runway heading coincident with the localizer; the MLS elevation was installed to have a coincident runway crossing height with the glide slope. When collecting azimuth/localizer data, the pilot flew the MLS azimuth signal and azimuth, localizer and RTT data were collected.

When collecting elevation/glide slope data, the pilot flew the MLS elevation signal and elevation, glide slope and RTT data were collected.

RESULTS AND ANALYSIS

The data from other tests performed during this series indicated that collocating an MLS azimuth with a localizer and an MLS elevation with a glide slope does not affect the quality of the course structure of the ILS. Therefore, any differences between the ILS and MLS noted in this report were not caused by collocating the systems. ILS and MLS course error data are normally presented differently due to different specifications for each system. The ILS data, both localizer and glide slope, are raw error (receiver cross pointer minus RTT) and is not filtered. The MLS data presented in this report is also unfiltered raw error so that all comparisons are between raw error data.

Figure 4 is a plot of the localizer error for a centerline approach. The error stays within the prescribed error limits, but the rapid high frequency oscillations at 0.5, 1.5, 4.5, and 7.0 miles are caused by other aircraft flying between the localizer and the test aircraft (overflight interference). In addition, there is a lower frequency scalloping effect on the signal from 2 miles to threshold. Figure 5 is a plot of the raw MLS azimuth data for the same approach. It is obvious from the data that the MLS is unaffected by the overflight interference and does not have any scalloping. The tolerance limits on the MLS data are those for the PFE filtered data and are for reference only. Figures 6 (localizer) and 7 (azimuth) are the raw error traces from a second approach with the same trends evident. There is overflight interference on the localizer at 4 and 6 miles and scalloping in the final 2 miles, while the azimuth signal is unaffected by the overflight interference and shows no scalloping.

Figure 8 is the glide slope raw error trace from an approach while figure 9 is the MLS elevation raw error from the same approach. The elevation signal has less scalloping and fewer course bends than the glide slope. Figures 10 (glide slope) and 11 (elevation) are raw error traces from a second approach and show the same trends as the first approach.

RESULTS AND CONCLUSIONS

The data collected show that the Microwave Landing System (MLS) signal has less scalloping and fewer bends than a category I instrument landing system (ILS) during an approach. In addition, the MLS azimuth signal is unaffected by overflight interference which causes severe perturbations in the localizer signal.

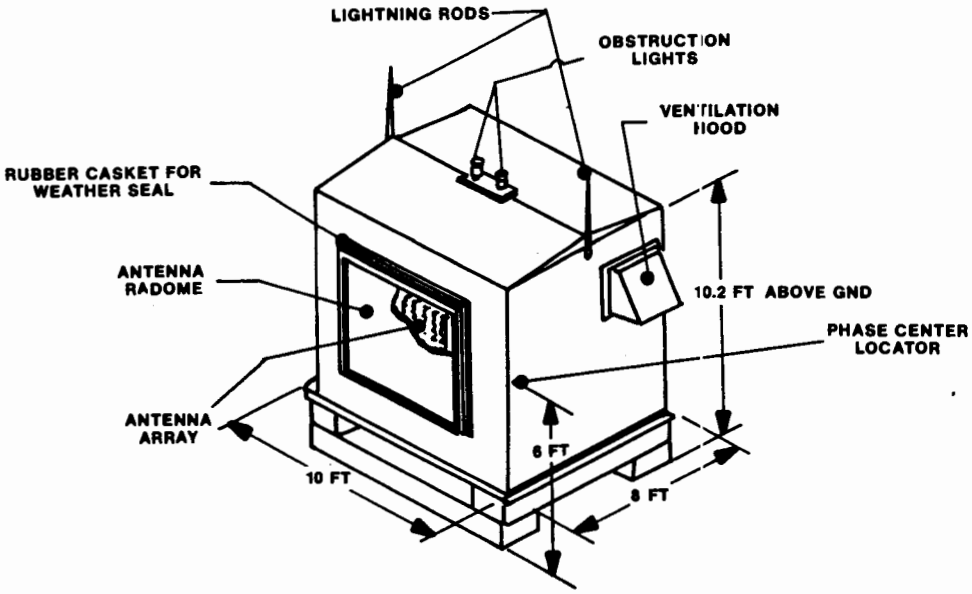

SHELTERED CONFIGURATION
AZIMUTH SUBSYSTEM

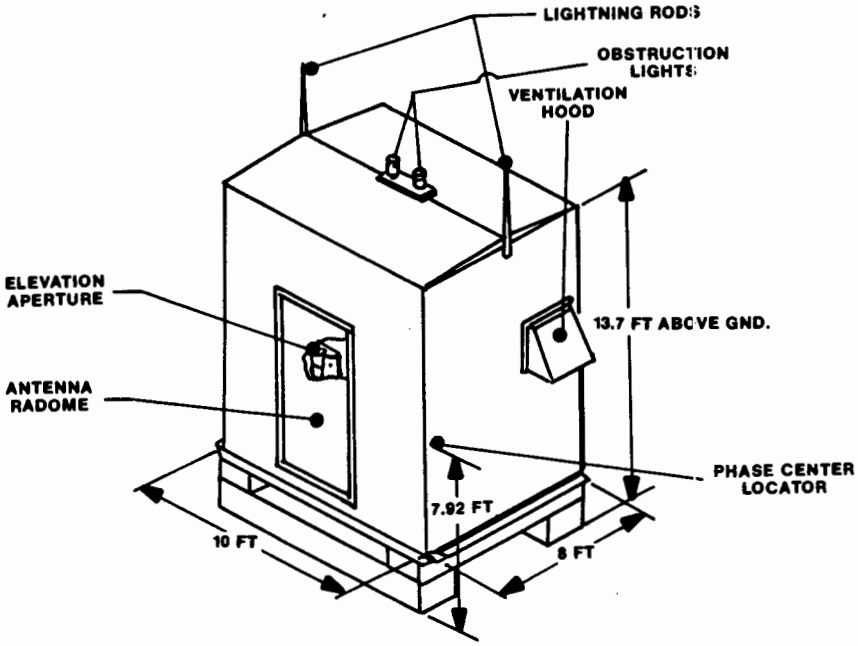

SHELTERED CONFIGURATION
1.5° ELEVATION SUBSYSTEM

FIGURE 1. DRAWING OF MLS AZIMUTH AND ELEVATION STATIONS

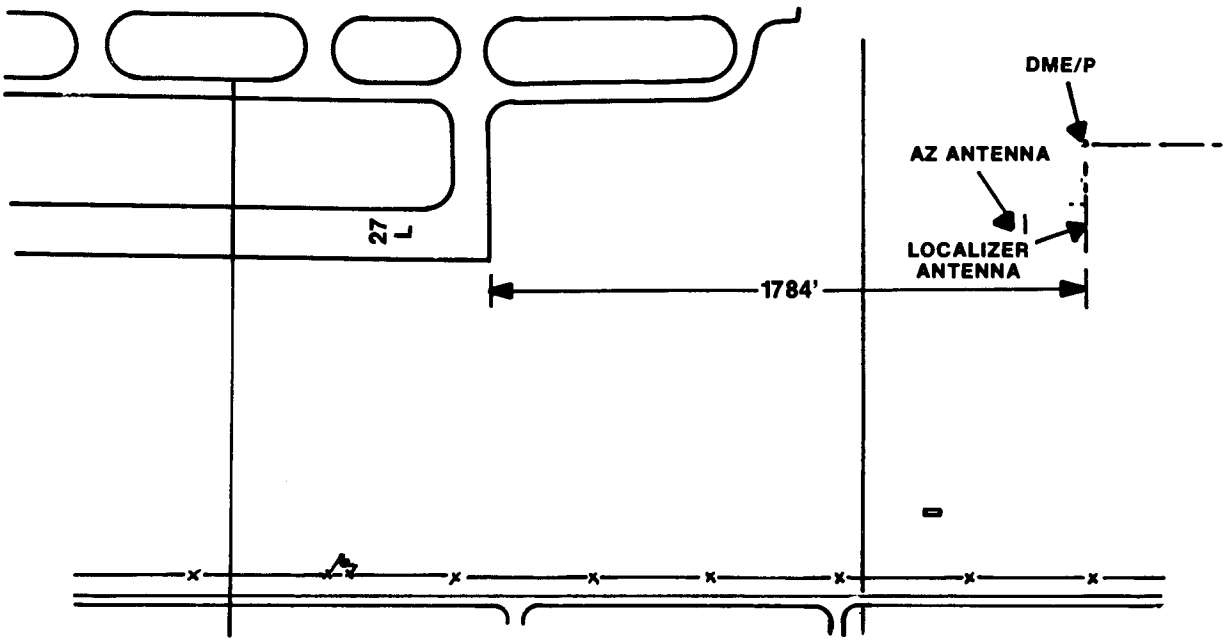

FIGURE 2. LOCALIZER AND AZIMUTH LOCATIONS

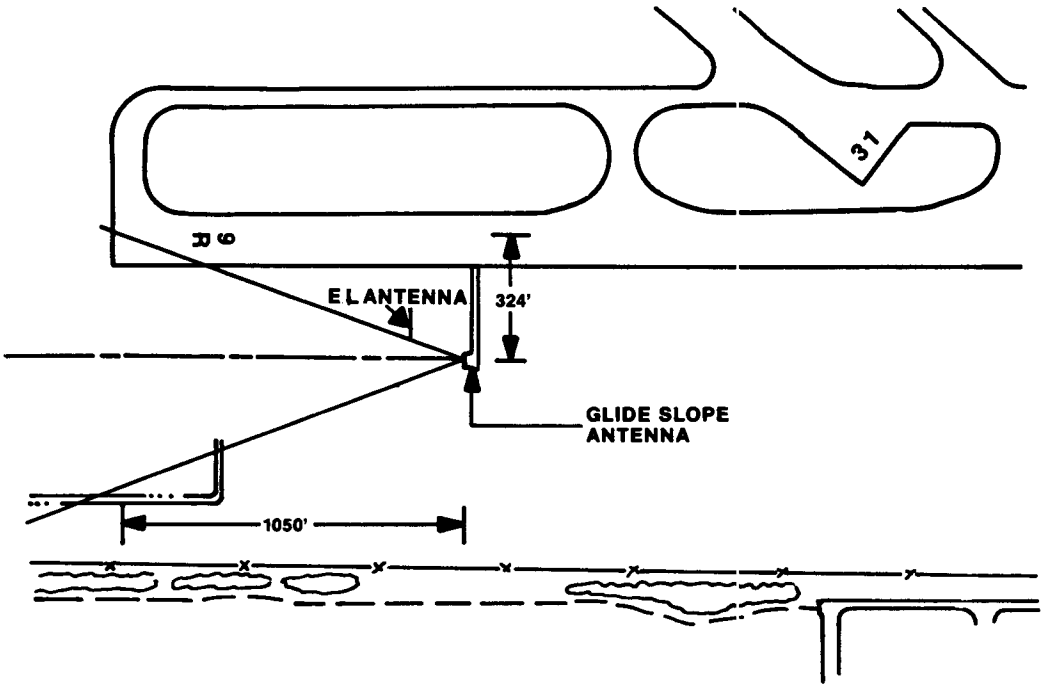

FIGURE 3. GLIDE SLOPE AND ELEVATION LOCATIONS

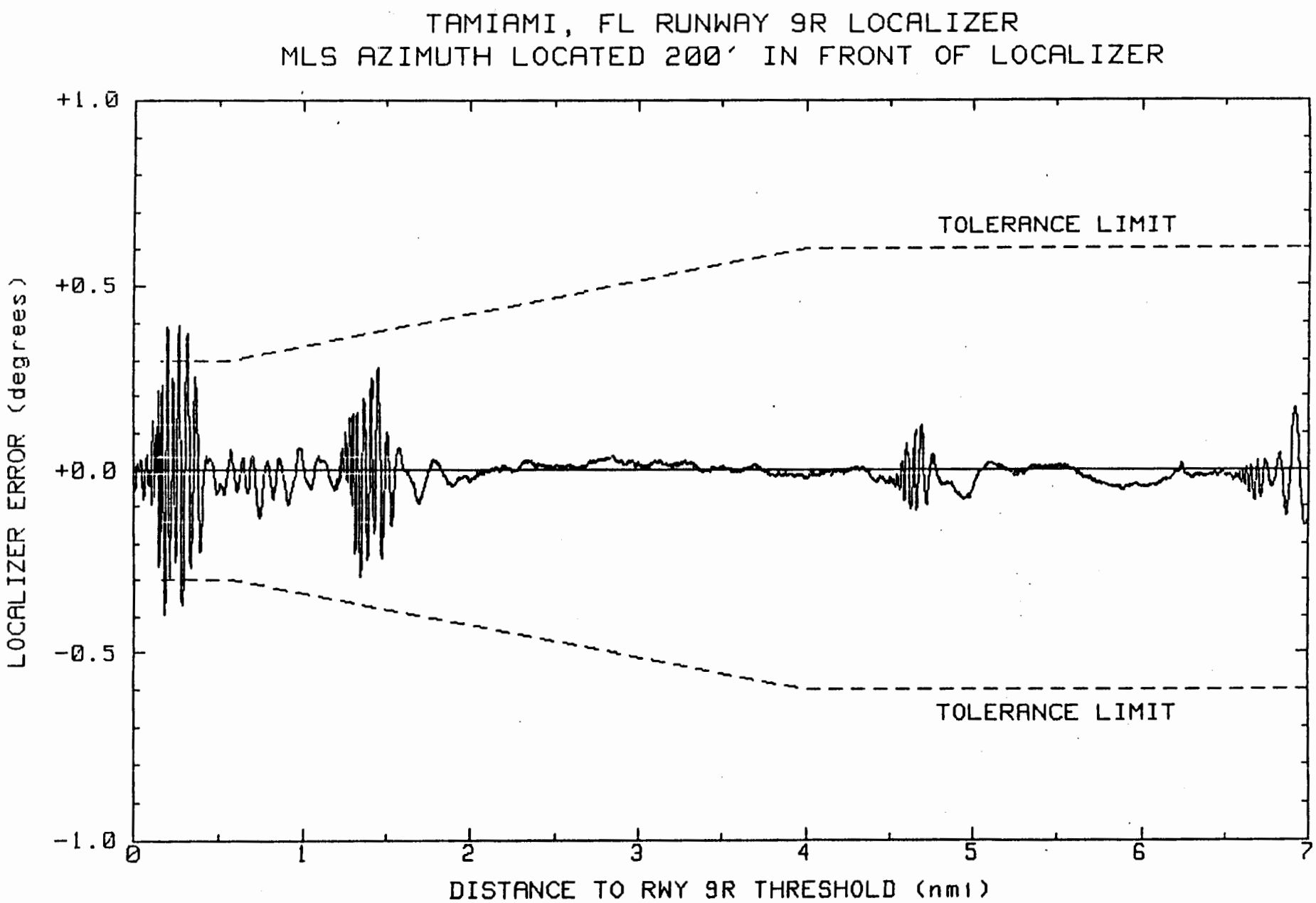

FIGURE 4. LOCALIZER ERROR PLOT FOR A CENTERLINE APPROACH

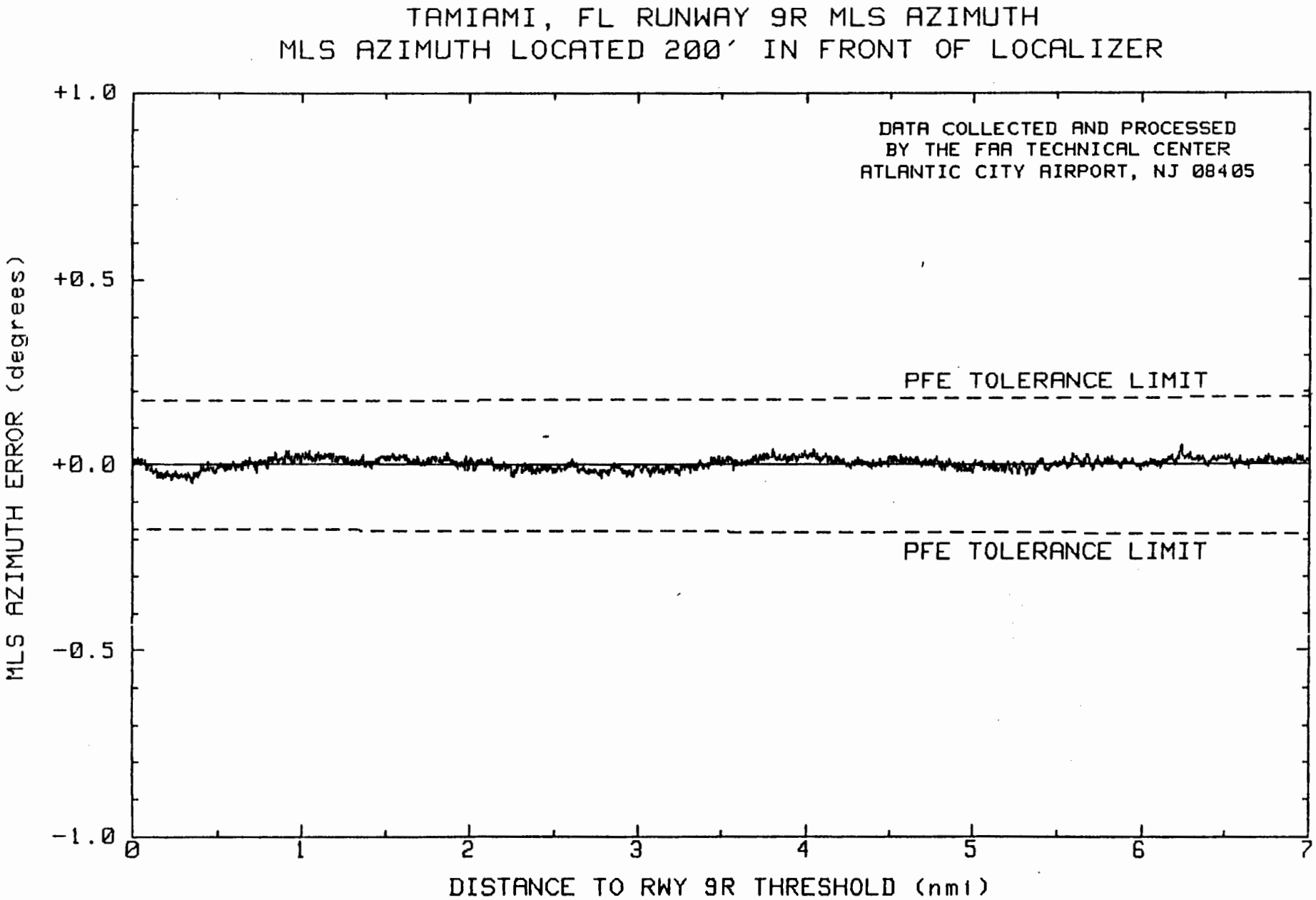

FIGURE 5. AZIMUTH RAW ERROR PLOT FOR A CENTERLINE APPROACH

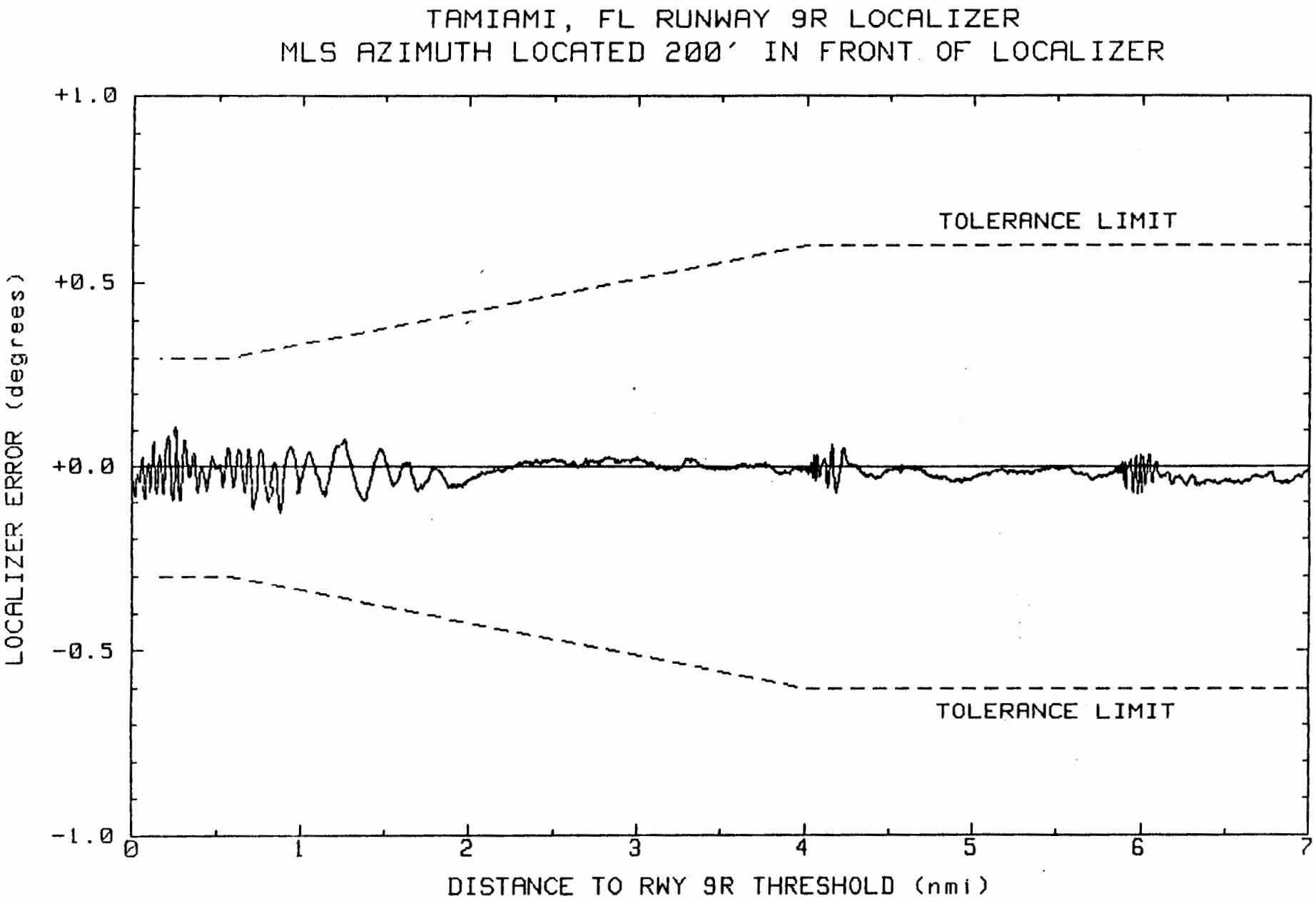

FIGURE 6. LOCALIZER ERROR PLOT FOR A SECOND CENTERLINE APPROACH

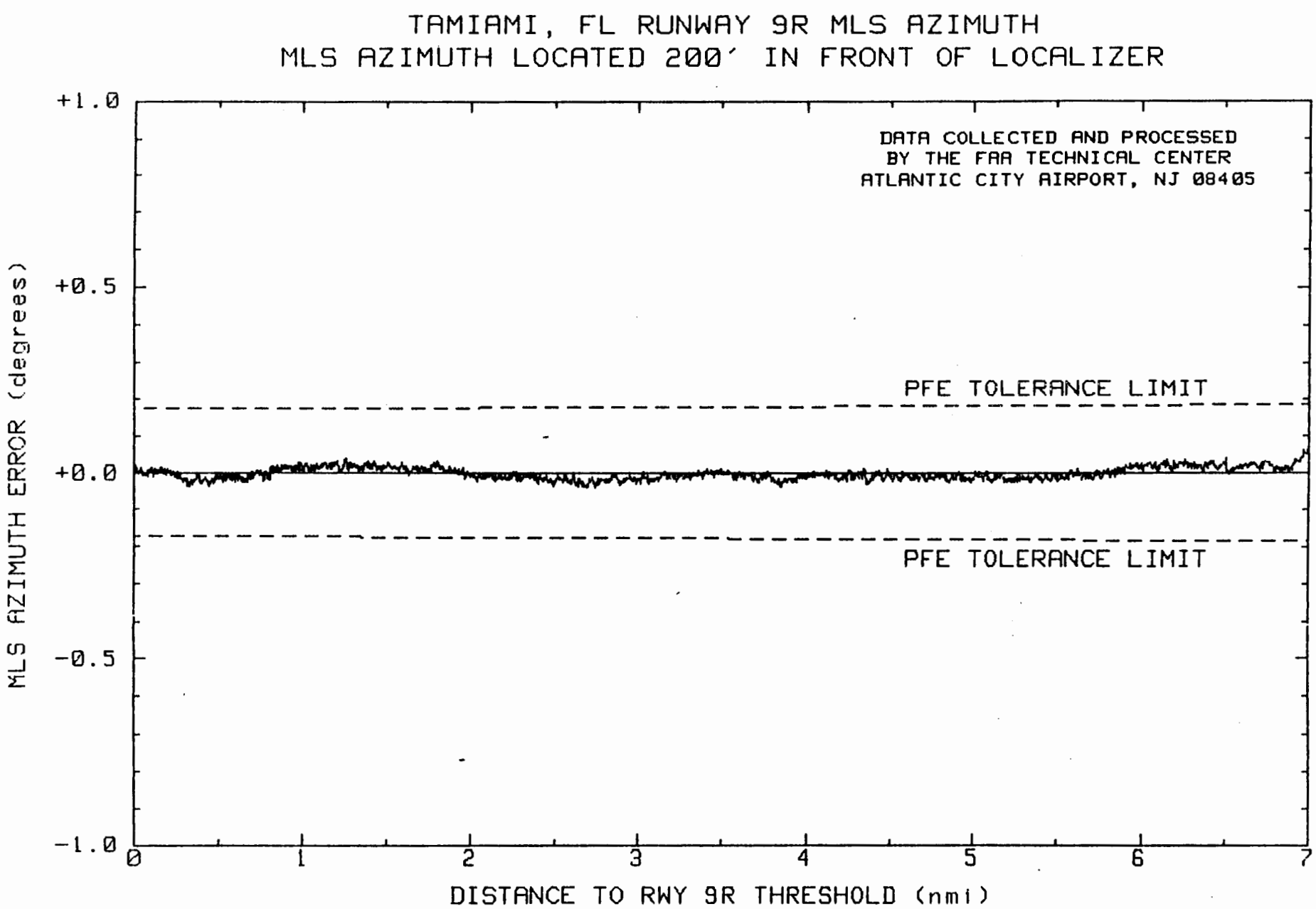

FIGURE 7. AZIMUTH RAW ERROR PLOT FOR A SECOND CENTERLINE APPROACH

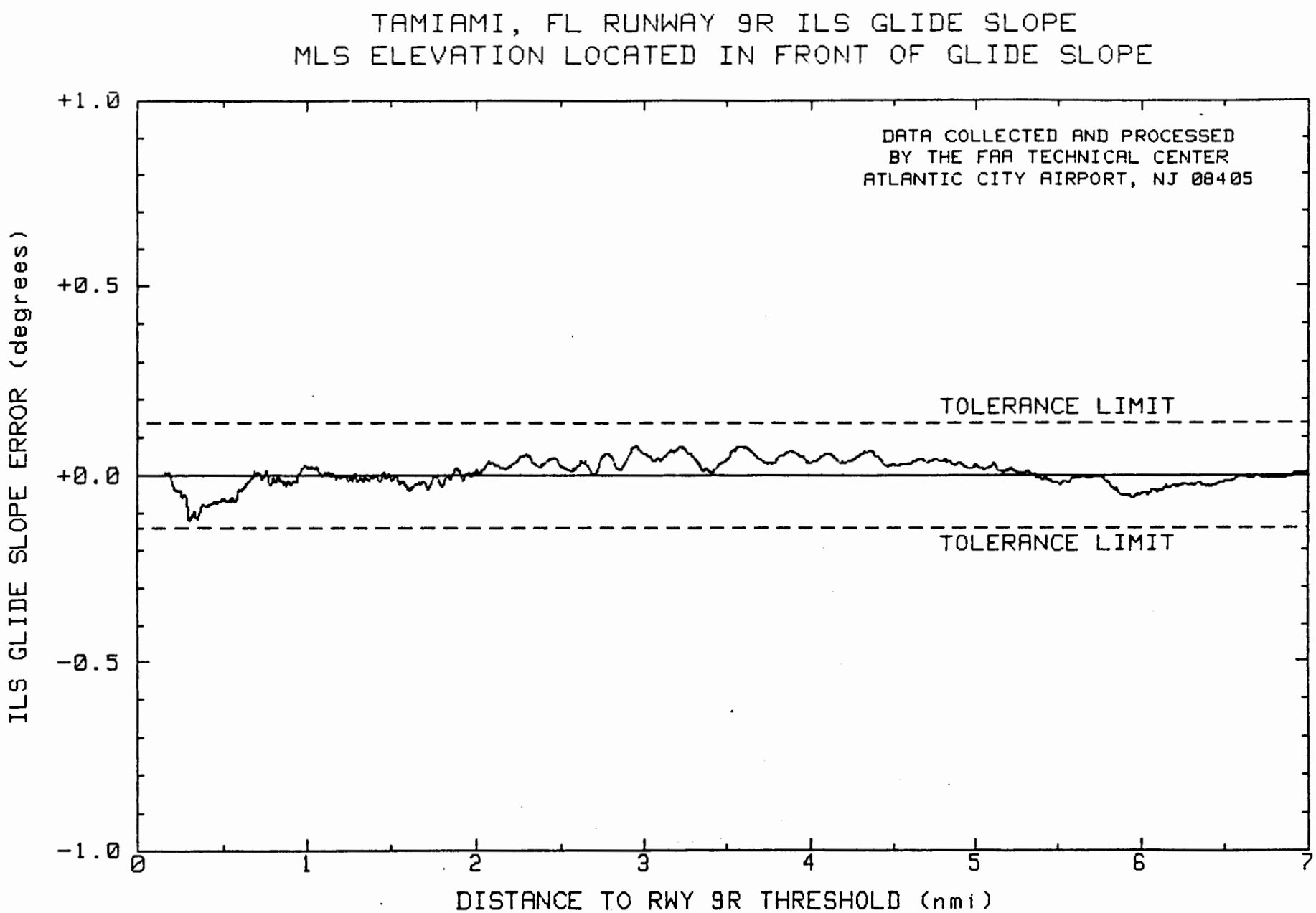

FIGURE 8. GLIDE SLOPE ERROR PLOT FOR A CENTERLINE, 3° APPROACH

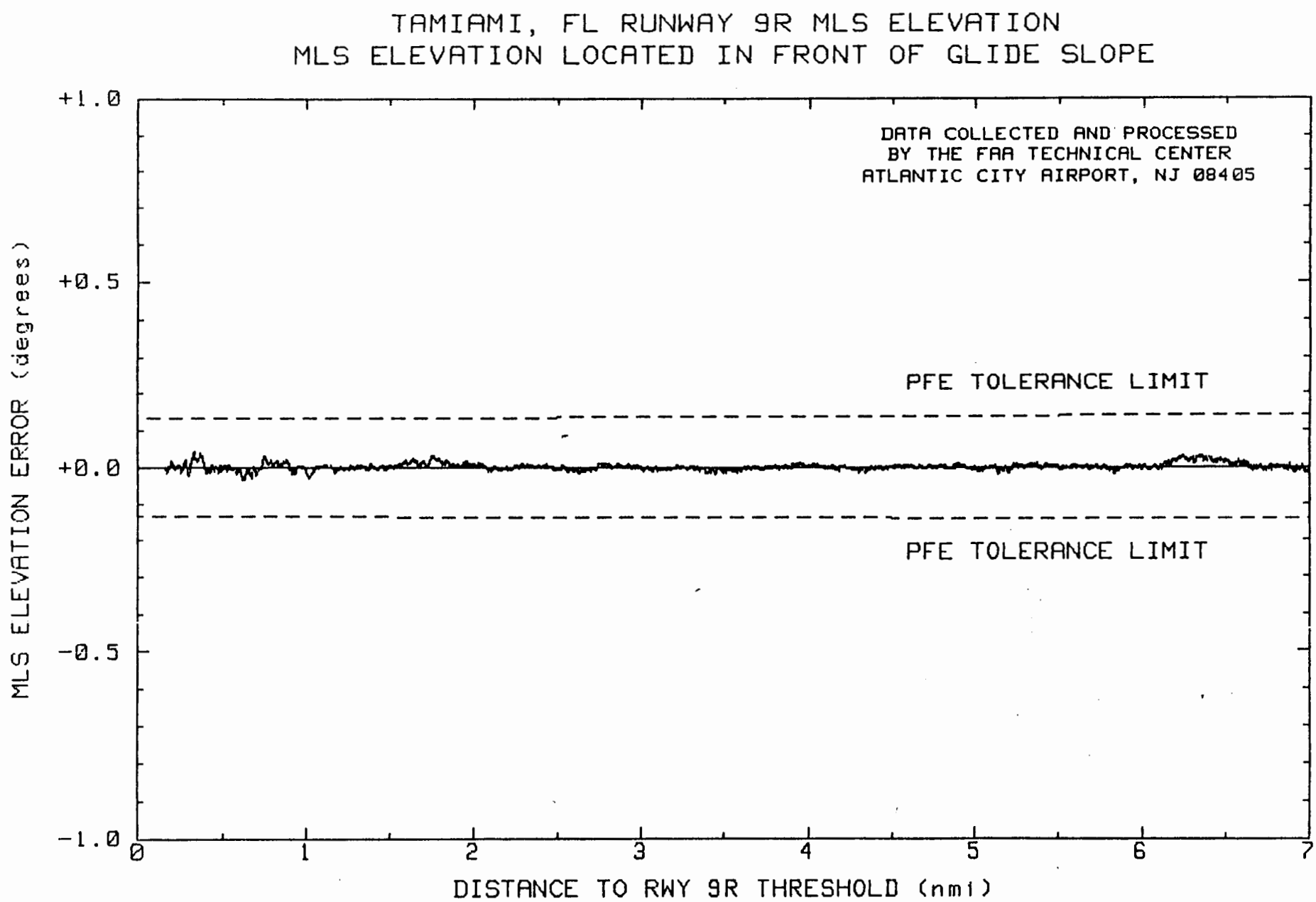

FIGURE 9. ELEVATION RAW ERROR PLOT FOR A CENTERLINE, 3° APPROACH

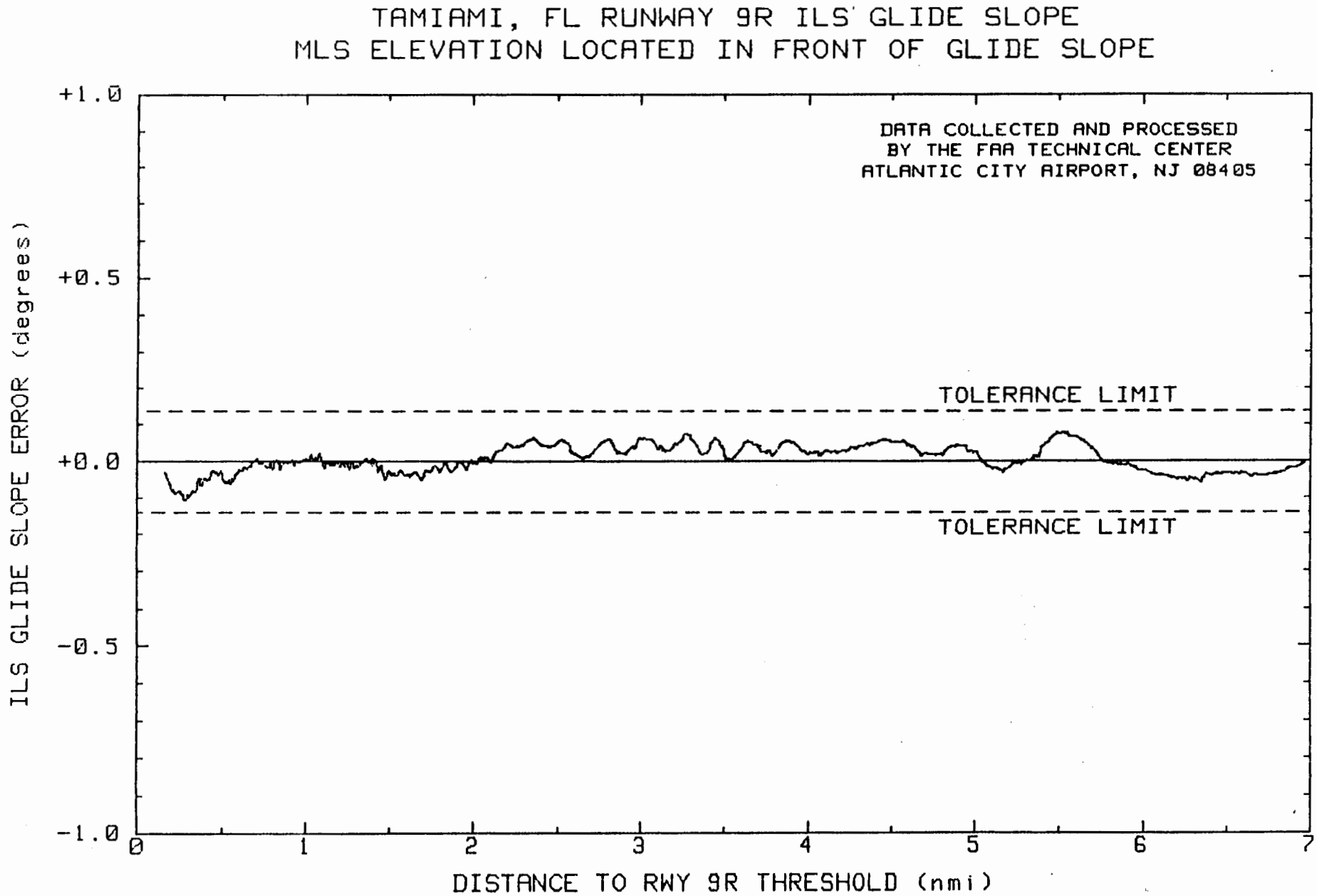

FIGURE 10. GLIDE SLOPE ERROR PLOT FOR A SECOND CENTERLINE, 3° APPROACH

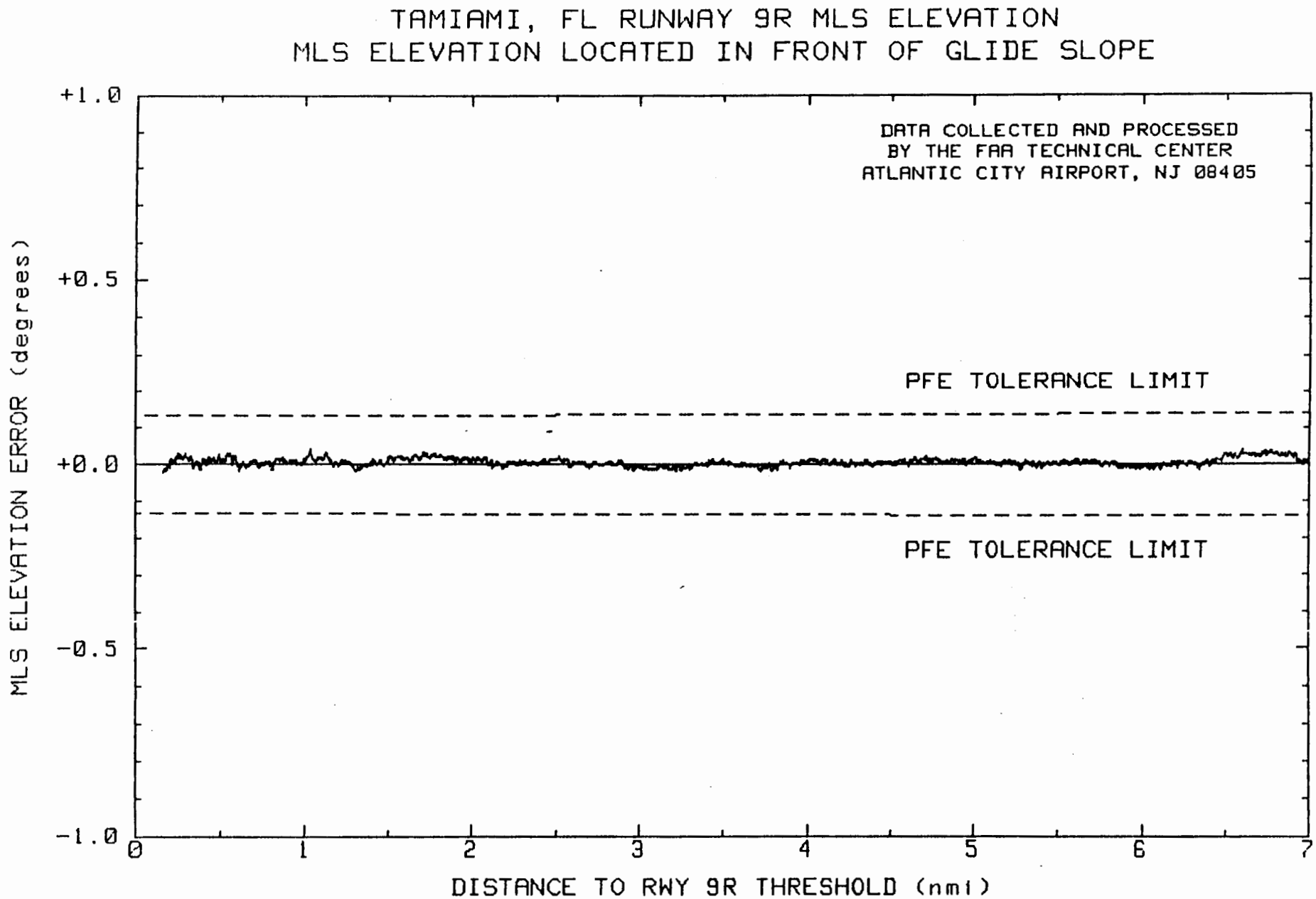

FIGURE 11. ELEVATION RAW ERROR PLOT FOR A SECOND CENTERLINE, 3° APPROACH