COPY

FAA WJH Technical Center
00093207

Comparison of 14 Decibels Versus 20 Decibels Desired to Undesired Signal Protection Ratios

Martin Badinelli
Arthur Cushman
Philip Randazzo

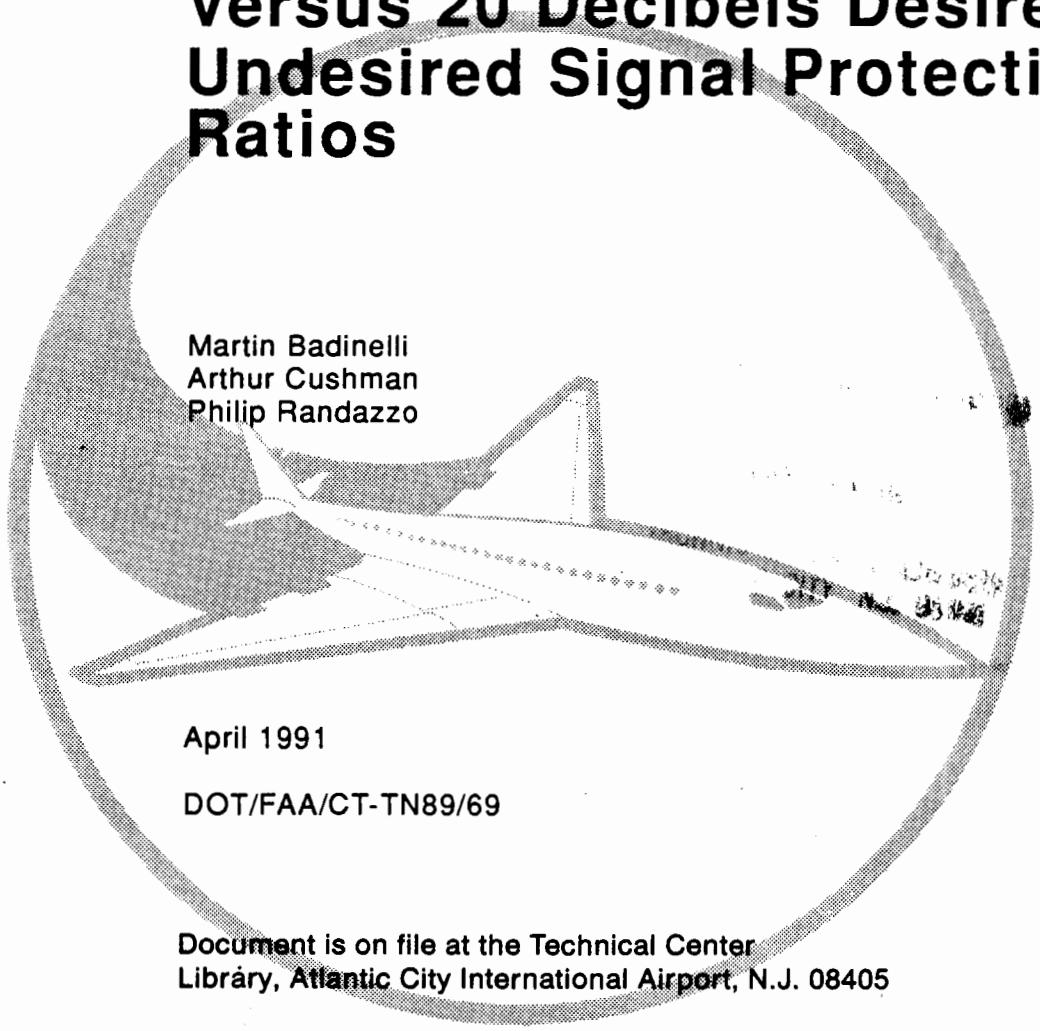

April 1991

DOT/FAA/CT-TN89/69

Document is on file at the Technical Center
Library, Atlantic City International Airport, N.J. 08405

U.S. Department of Transportation
Federal Aviation Administration

Technical Center
Atlantic City International Airport, N.J. 08405

technical note technical note

NOTICE

This document is disseminated under the sponsorship of the U.S. Department of Transportation in the interest of information exchange. The United States Government assumes no liability for the contents or use thereof.

The United States Government does not endorse products or manufacturers. Trade or manufacturers' names appear herein solely because they are considered essential to the objective of this report.

Technical Report Documentation Page

1. Report No.	2. Government Accession No.	3. Recipient's Catalog No.
DOT/FAA/CT-TN89/69		

4. Title and Subtitle	5. Report Date
COMPARISON OF 14 DECIBELS VERSUS 20 DECIBELS DESIRED TO UNDESIRED SIGNAL PROTECTION RATIOS	April 1991
	6. Performing Organization Code
7. Author(s)	8. Performing Organization Report No.
Martin Badinelli, Arthur Cushman, Philip Randazzo	DOT/FAA/CT-TN89/69
9. Performing Organization Name and Address	10. Work Unit No. (TRAIS)
Federal Aviation Administration Technical Center Atlantic City International Airport, NJ 08405	11. Contract or Grant No.
	13. Type of Report and Period Covered
12. Sponsoring Agency Name and Address	Technical Note
U.S. Department of Transportation Federal Aviation Administration Technical Center Atlantic City International Airport, NJ 08405	14. Sponsoring Agency Code

15. Supplementary Notes

16. Abstract

Due to a shortage of very high frequency (VHF) communications frequencies, the Federal Aviation Administration (FAA) must use the same frequencies in different airspaces across the country. The geographical separation between ground transmitters is engineered to provide a desired signal that is at least 14 decibel (dB) above any co-channel signal the receiver may receive. The International Civil Aviation Organization (ICAO) recommends a greater 20-dB separation. This difference between the two signals is known as the desired to undesired (D/U) ratio.

This report describes tests performed on eight avionics receivers at the FAA Technical Center to compare receiver performance when exposed to 14- and 20-dB co-channel interference.

It was concluded that at both D/U ratios, the receiver was able to reproduce clear, audible, and intelligible speech at both D/U ratios.

17. Key Words	18. Distribution Statement
Desired to Undesired (D/U) Ratio Signal Protection Ratios Co-channel Signal Protection	Document is on file at the Technical Center Library, Atlantic City International Airport, NJ 08405

19. Security Classif. (of this report)	20. Security Classif. (of this page)	21. No. of Pages	22. Price
Unclassified	Unclassified	14	

Form DOT F 1700.7 (8-72) Reproduction of completed page authorized

TABLE OF CONTENTS

	Page
BACKGROUND	1
TEST DESIGN	1
Test Approach	1
Test Procedure	4
TEST RESULTS AND ANALYSIS	4
(S+N)/N Tests	4
Voice Comparisons	6
RECEIVERS	8
CONCLUSIONS	9

LIST OF ILLUSTRATIONS

Figure		Page
1	Test Setup for Measuring (S+N)/N	2
2	Test Setup for Making Voice Recordings	3

LIST OF TABLES

Table		Page
1	(S+N)/N Measurements with D/U Ratios of 14 and 20 dB and a Desired Signal of -87 dBm	5
2	(S+N)/N Measurements with D/U Ratios of 14 and 20 dB and a Desired Signal of -60 dBm	5
3	Comparison of (S+N)/N at Four Undesired Signal Levels	6
4	Voice Recordings at Both D/U Ratios and Both Desired Signal Levels	7
5	Test Parameters for Voice Recordings	8

BACKGROUND

Due to the critical shortage of very high frequency (VHF) communications frequencies, the Federal Aviation Administration (FAA) must use the same frequencies repeatedly in different airspaces across the country. Because of their high altitude radio line of sight, aircraft can often receive more than one of these co-channel ground transmissions simultaneously. If proper controls were not in place, the aircraft receiver could be overwhelmed by distant co-channel transmissions and have difficulty receiving the desired local transmitter. FAA frequency engineering practice is to separate ground transmitters sufficiently to provide a desired signal that is at least 14 decibels (dB) above any co-channel signal the aircraft may receive. This 14-dB difference, which is needed to guarantee reception of the desired signal in the presence of the undesired signal, is called the desired to undesired (D/U) ratio. The International Civil Aviation Organization (ICAO) recommends a greater 20-dB D/U ratio which FAA is unable to use due to frequency congestion. At the request of the Spectrum Engineering Division, ASM-500, the FAA Technical Center conducted tests to compare receiver operation when exposed to D/U co-channel signal ratios of 14 and 20 dB.

TEST DESIGN

TEST APPROACH.

Using two signal generators and an avionics receiver tuned to 127 megahertz (MHz), an air-to-ground communications system, with D/U ratios of either 14 or 20 dB, can be simulated. The desired signal generator was modulated 30 percent by a 1000-hertz (Hz) tone. A second signal generator, which represented the undesired signal, was set up at the same frequency and modulation but either 14 or 20 dB down depending on the required D/U ratio. (See figure 1.) Two signal levels, -87 and -60 decibels above 1 milliwatt (dBm), were used as the desired signal to represent the minimum level expected at the edge of the service volume and a stronger signal found within the service volume, respectively. The undesired signal was 14 and 20 dB down from these levels; i.e., the -87 dBm had undesired signals of -101 and -107 dBm and the -60 dBm had -74 and -80 dBm as undesired signals. These radiofrequency (RF) input signal levels were measured at the receiver's antenna input terminal.

To compare the effect of D/U ratio on the receiver's desired voice quality, the 1000-Hz tones were replaced by recorded messages. (See figure 2.) The desired was a recording of 10 common air traffic control (ATC) phrases and the undesired was a recorded, 1 to a 100, test count which was selected to be easily distinguishable from the desired ATC phrases. Both signal generators were modulated 90 percent and the above signal levels were used again. Audio tape recordings were made at the output of the receiver.

Eight avionics receivers, representing both air carrier and general aviation, were used for these tests. All were produced under FAA Technical Standard Order (TSO) C-38b.

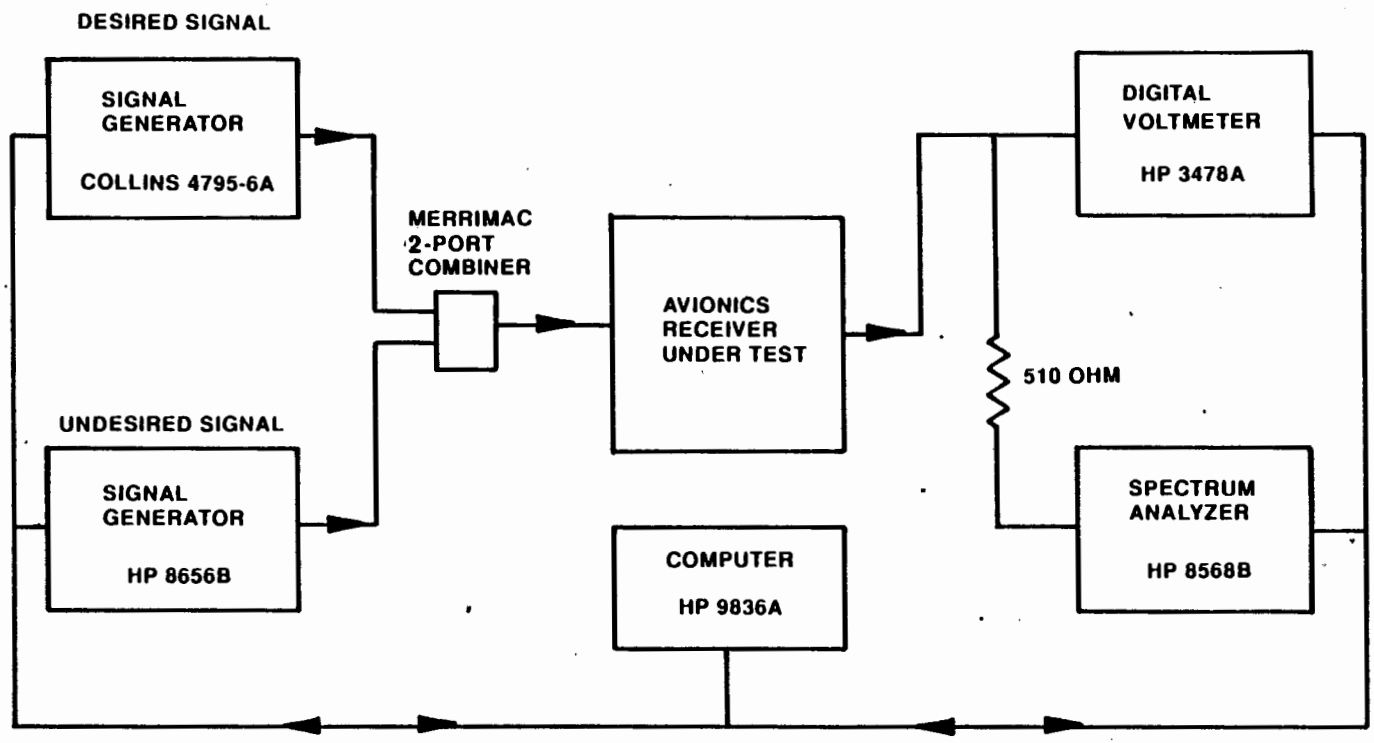

FIGURE 1. TEST SETUP FOR MEASURING (S+N)/N

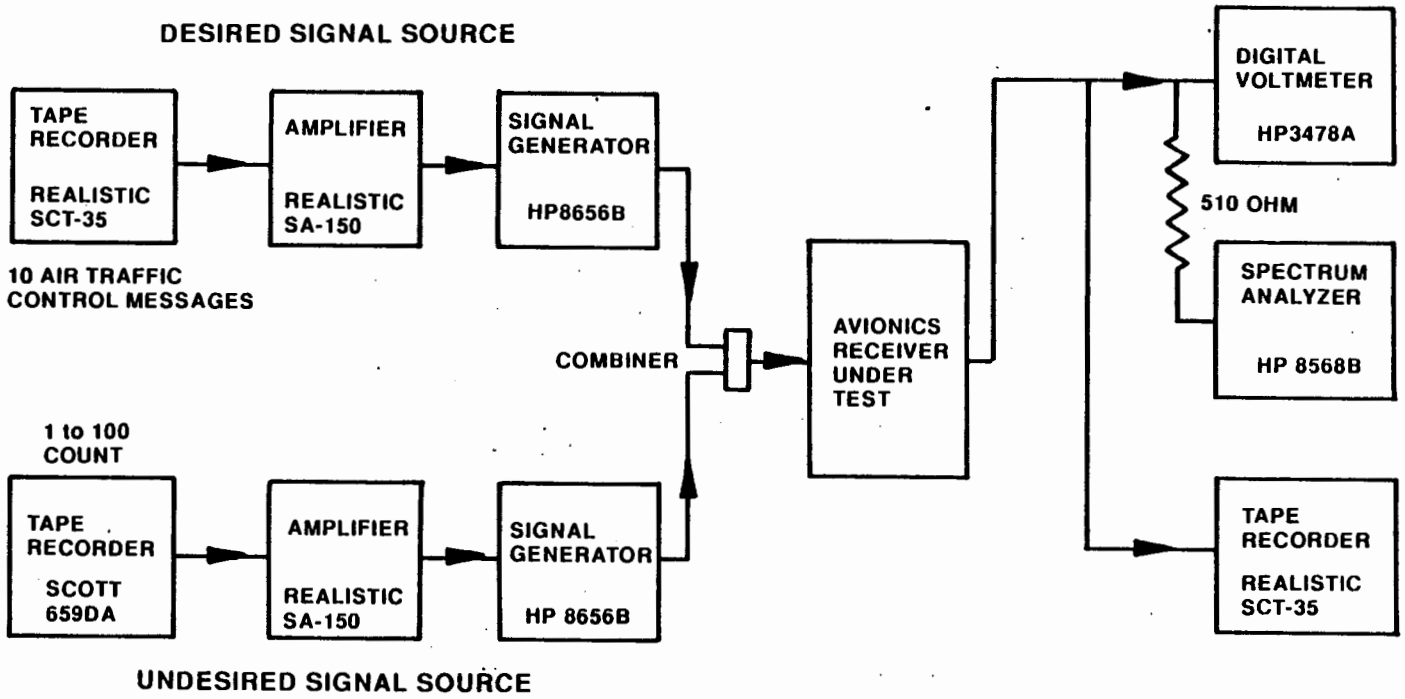

FIGURE 2. TEST SETUP FOR MAKING VOICE RECORDINGS

FAA WJH Technical Center
00093207

TEST PROCEDURE.

When two co-channel signals, 14 or 20 dB apart, are received simultaneously by a receiver, the stronger signal will be interpreted as the signal and the weaker as noise. Therefore, degradation in receiver performance can be determined by comparing the signal-plus-noise-to-noise ((S+N)/N) ratios at both D/U ratios.

After a baseline (S+N)/N was established, using the desired signal only, the undesired signal generator was turned on and the (S+N)/N measurement repeated. Any reduction in (S+N)/N was an indication of receiver performance degradation. Measurements were made at both D/U ratios with the undesired signal treated as noise in computing (S+N)/N. These were automated tests with all signal generator adjustments and digital voltmeter measurements under computer control.

Voice recordings, which were also made at the audio output of the receiver, show D/U ratio effect on receiver audio under all possible test conditions. They began with undesired carrier only, to simulate a distant (undesired) FAA ground station being keyed. Next, the test count was added to the undesired signal to simulate the undesired controller. Then, the unmodulated desired signal was turned on to show the effect of keying the desired station while the undesired signal was still present. Finally, the ATC voice messages were added to the desired signal to evaluate the receiver's ability to differentiate between the desired controller's voice and the undesired test count. The effect under all four test conditions was noted.

TEST RESULTS AND ANALYSIS

(S+N)/N TESTS.

The (S+N)/N data, at both D/U ratios, is shown in tables 1 and 2. Table 1 data were collected with a desired signal of -87 dBm and table 2 was at -60 dBm. The baseline (S+N)/N is listed under the desired only column and it is seen that the undesired signal causes a reduction. The column labelled delta, tabulates each receiver's increase in (S+N)/N as the D/U ratio increases from 14 to 20 dB. In nearly all cases, the 20-dB D/U ratio is seen to improve the (S+N)/N by approximately 6 dB (+/- 1 dB) which is also the difference between the 14- and 20-dB D/U ratios. Only receiver 5, at the -87 dBm desired signal level, and receiver 7, at both levels, experienced lesser improvement.

At either desired level, a 14-dB down co-channel undesired signal reduced the (S+N)/N to nearly the same absolute level. (See table 3.) This is caused by the Automatic Gain Control (AGC) action of the receiver. As the desired signal is increased, the receiver's AGC maintains a constant audio output while reducing the noise floor proportionately. Adding the undesired, which appears as noise to the receiver, does not affect this constant audio level which is governed by the stronger signal but does raise the noise level causing the reduction in (S+N)/N noticed above. This shows that in the presence of an undesired signal, receiver performance is dependent on D/U ratio but independent of desired signal level. The same effect was noted with a 20-dB D/U ratio.

TABLE 1. (S+N)/N MEASUREMENTS WITH D/U RATIOS OF 14 AND 20 dB AND A DESIRED SIGNAL OF -87 dBm

Receiver Number	Desired Only (-87 dBm)	Undesired Down 14 dB (-101 dBm)	Undesired Down 20 dB (-107 dBm)	Delta dB
1	26	16	21	5
2	28	13	19	6
3	25	16	21	5
4	27	11	18	7
5	25	17	21	4
6	29	17	23	6
7	20	15	18	3
8	24	16	21	5

(S+N)/N data is in dB.

Delta is the difference between 14 and 20 dB data.

TABLE 2. (S+N)/N MEASUREMENTS WITH D/U RATIOS OF 14 AND 20 dB AND A DESIRED SIGNAL OF -60 dBm

Receiver Number	Desired Only (-60 dBm)	Undesired Down 14 dB (-74 dBm)	Undesired Down 20 dB (-80 dBm)	Delta dB
1	47	17	23	6
2	47	14	20	6
3	42	17	22	5
4	43	11	18	7
5	35	18	23	5
6	42	18	23	5
7	25	17	21	4
8	30	17	23	6

(S+N)/N data is in dB.

Delta is the difference between 14 and 20 dB data.

TABLE 3. COMPARISON OF (S+N)/N AT FOUR UNDESIRED SIGNAL LEVELS

Receiver Number	Undesired -101/-74 Down 14 dB	Difference dB	Undesired -107/-80 Down 20 dB	Difference dB
1	16/17	1	21/23	2
2	13/14	1	19/20	1
3	16/17	1	21/22	1
4	11/11	0	18/18	0
5	17/18	1	21/23	2
6	17/18	1	23/23	0
7	15/17	2	18/21	3
8	16/17	1	21/23	2

Difference column is the difference between -101/-74 dBm or -107/-80 dBm (S+N)/N data.

VOICE COMPARISONS.

Voice recordings of the receiver output were made at both desired signal levels and both D/U ratios under four different conditions. Condition one used only the undesired carrier as the receiver input. Condition two was the undesired carrier modulated by the test count. Condition three kept the modulated undesired signal but also added the desired carrier only. Condition four was the same as three except the desired was now modulated by 10 ATC phrases. Observations of each recording are tabulated in table 4 and the combination of signal level parameters used for each test are explained in table 5.

Under condition 1, the undesired carrier broke squelch at all signal levels except the -87 dBm desired level with a 20-dB D/U ratio. With these parameters, the undesired signal was -107 dBm and on most receivers did not break squelch. Receivers 2 and 4 broke squelch and receiver 8 experienced intermittent squelch breaks.

When the undesired was modulated for condition 2 testing, an audible voice count was heard at every receiver/signal level that had broken squelch under condition 1. Receiver 8, with its intermittent squelch breaks, produced the most annoying listening conditions.

TABLE 4. VOICE RECORDINGS AT BOTH D/U RATIOS AND BOTH DESIRED SIGNAL LEVELS

Receiver	Test	Condition 1	Condition 2	Condition 3	Condition 4
1	a	BS	UA	UAB	DO, UAA
	b	DBS	DBS	UAB, W	DO, UAA
	c	BS	UA	UAB	DO, UAA
	d	BS	UA	UAB, W	DO, UAA, W
2	a	BS	UA	UAB	DO, UAA
	b	BS	UA	UAB, W	DO, UAA, W
	c	BS	UA	UAB	DO, UAA
	d	BS	UA	UAB, W	DO, UAA, W
3	a	BS	UA	BA	DO, BA
	b	DBS	DBS	BA	DO, BA
	c	BS	UA	UAB	DO, UAA
	d	BS	UA	BA	DO, BA
4	a	BS	UA	UAB	DO, UAA
	b	BS	UA	UAB	DO, UAA
	c	BS	UA	UAB	DO, UAA
	d	BS	UA	UAB	DO, UAA
5	a	BS	UA	UAB	DO, UAA
	b	DBS	DBS	UAB, W	DO, UAA
	c	BS	UA	UAB	DO, UAA
	d	BS	UA	BA	DO, BA
6	a	BS	UA	UAB	DO, UAA
	b	DBS	DBS	BA	DO, BA
	c	BS	UA	UAB	DO, UAA
	d	BS	UA	BA	DO, BA
7	a	BS	UA	UAB	DO, UAA
	b	DBS	DBS	BA	DO, BA
	c	BS	UA	UAB, W	DO, UAA
	d	BS	UA	BA	DO, BA
8	a	BS	UA	UAB	DO, UAA, W
	b	IBS	UA, IBS	UAB	DO, UAA, W
	c	BS	UA	BA	DO, BA
	d	BS	UA	BA	DO, BA

Condition 1 is undesired carrier only. Condition 2 is modulated undesired. Condition 3 is modulated undesired plus desired carrier only. Condition 4 is modulated undesired plus desired ATC phrases.

BS - Breaks Squelch. DBS - Did not Break Squelch. UA - Undesired Audible.
UAB - Undesired Audible in Background. IBS - Intermittent Squelch Breaks.
DO - Desired Overrides undesired. BA - undesired Barely Audible.
W - undesired Weak. UAA - Undesired Audible if desired modulation is Absent.
(See table 5 for meaning of test a, b, c, and d.)

The desired carrier, generated under condition 3, broke squelch on those receivers that had not previously done so, permitting the test count to be heard in the background. On the receivers that had broken squelch under conditions 1 and 2, the audio level of the undesired test count was reduced to a background level. The extent of the reduction is best compared by referring to table 4. This reduction is caused by the receiver's AGC responding to the stronger desired carrier and maintaining a constant audio output based on this new level. In keeping the output constant, the receiver's noise floor is reduced. When the undesired, which is treated as noise by the receiver, is added to the desired, it raises the noise level thus reducing the (S+N)/N ratio which lowers the undesired audible test count.

In all cases, condition 4 showed that the desired ATC phrases overwhelmed the undesired and produced clear, audible, and intelligible desired speech. This was true at both D/U ratios with no noticeable difference between the two. In the period between one ATC phrase and the next, the undesired is audible in the background as found in condition 3.

The audio tapes are on file at the FAA Technical Center.

TABLE 5. TESTS PARAMETERS FOR VOICE RECORDINGS

Test	D/U Ratio (dB)	Desired Level (dBm)	Undesired Level (dBm)
a	14	-87	-101
b	20	-87	-107
c	14	-60	-74
d	20	-60	-80

RECEIVERS

Eight avionics receivers were used for this project. They are listed below in no particular order and the letters do not correspond to receivers one through eight referenced throughout the report.

A. King KY 197
B. King KY 92
C. King 9100A S/N 4626
D. King 9100A S/N 2103
E. King KTR 908
F. King KTR 905
G. Collins VHF 253
H. Collins 618M-3

CONCLUSIONS

1. Increasing the desired signal level above -87 decibels above 1 milliwatt (dBm) does not improve receiver signal-plus-noise-to-noise ((S+N)/N) when an undesired signal is present.

2. Increasing the desired to undesired (D/U) ratio by 6 decibels (dB), from 14 to 20 dB, also increases the receiver's (S+N)/N ratio by approximately 6 dB.

3. When desired and undesired signals with D/U ratios of at least 14 dB are present, the (S+N)/N ratio is dependent on D/U ratio but independent of desired signal level.

4. Clear, audible, and intelligible desired speech is produced with either D/U ratio.

5. The undesired signal also produces intelligible speech at both D/U ratios if it breaks squelch and no desired signal is present.