TN 90/43
COPY 1
FEDERAL AVIATION ADMINISTRATION
FAA WJH Technical Center
00093281
DEC 17 1991
TECHNICAL CENTER LIBRARY
ATLANTIC CITY INTL AIRPORT NJ 08405

NAS Operational Test and Evaluation (OT&E)/Integration of the Interim Monitor and Control Software (IMCS) Test Procedures

FEDERAL AVIATION ADMINISTRATION
DEC 17 1991
TECHNICAL CENTER LIBRARY
ATLANTIC CITY INTL AIRPORT NJ 08405

Richard Van Suetendael

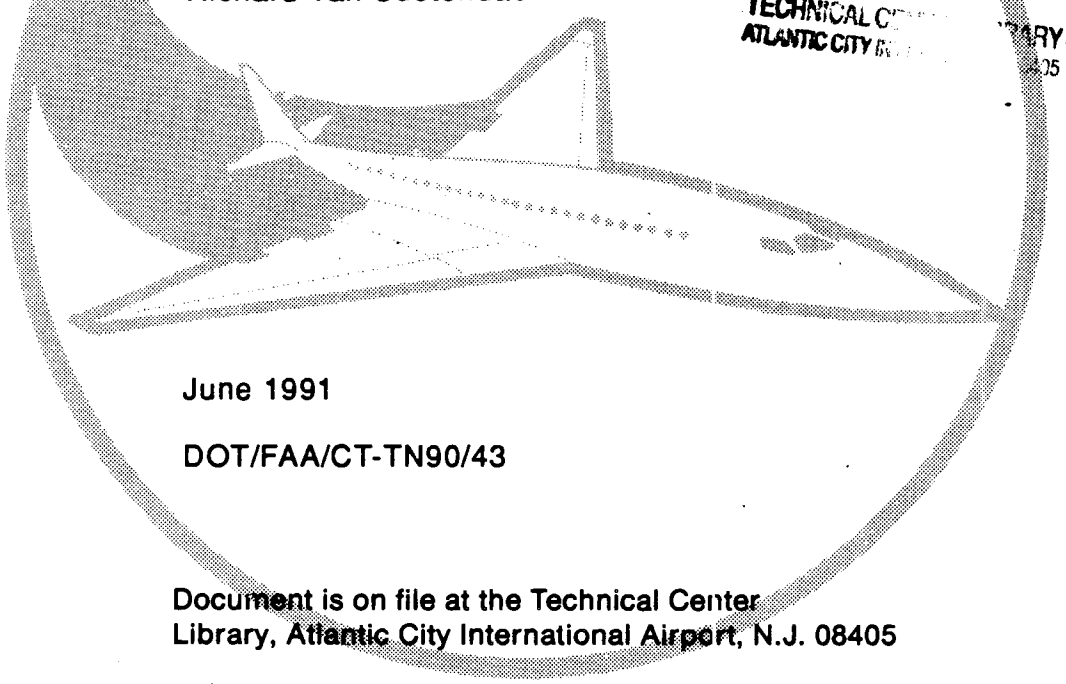

June 1991

DOT/FAA/CT-TN90/43

Document is on file at the Technical Center Library, Atlantic City International Airport, N.J. 08405

U.S. Department of Transportation
Federal Aviation Administration

Technical Center
Atlantic City International Airport, N.J. 08405

technical note technical note technical note

NOTICE

This document is disseminated under the sponsorship of the U.S. Department of Transportation in the interest of information exchange. The United States Government assumes no liability for the contents or use thereof.

The United States Government does not endorse products or manufacturers. Trade or manufacturers' names appear herein solely because they are considered essential to the objective of this report.

Technical Report Documentation Page

1. Report No. DOT/FAA/CT-TN90/43	2. Government Accession No.	3. Recipient's Catalog No.
4. Title and Subtitle NAS OPERATIONAL TEST AND EVALUATION (OT&E)/ INTEGRATION OF THE INTERIM MONITOR AND CONTROL SOFTWARE (IMCS) TEST PROCEDURES		5. Report Date June 1991
		6. Performing Organization Code
7. Author(s) Richard Van Suetendael		8. Performing Organization Report No. DOT/FAA/CT-TN90/43
9. Performing Organization Name and Address Federal Aviation Administration Technical Center Atlantic City International Airport, NJ 08405		10. Work Unit No. (TRAIS)
		11. Contract or Grant No.
12. Sponsoring Agency Name and Address U.S. Department of Transportation Federal Aviation Administration Maintenance Automation Software Program Washington, DC 20591		13. Type of Report and Period Covered Technical Note
		14. Sponsoring Agency Code
15. Supplementary Notes		

16. Abstract

This report presents the procedures used for the National Airspace System (NAS) Operational Test and Evaluation (OT&E)/Integration of the Interim Monitor and Control Software (IMCS). As Test Director, ACN-250 conducted NAS OT&E Integration testing at the FAA Technical Center, Atlantic City International Airport, NJ.

The purpose of the test is to verify that the IMCS version PCB0703 functions properly in an integrated Maintenance Management System (MMS)/IMCS environment, and that all applicable NAS requirements have been fulfilled.

17. Key Words Interim Monitor and Control Software (IMCS) Maintenance Management System (MMS) Maintenance Processor Subsystem (MPS) Remote Maintenance Monitor System (RMMS)	18. Distribution Statement Document is on file at the Technical Center Library, Atlantic City International Airport, NJ 08405

19. Security Classif. (of this report)	20. Security Classif. (of this page)	21. No. of Pages	22. Price
Unclassified	Unclassified	135	

Form DOT F 1700.7 (8-72) Reproduction of completed page authorized

TABLE OF CONTENTS

		Page
1.	INTRODUCTION	1
1.1	Background	1
1.2	Objective	1
1.3	Reference Documents	1
2.	COMMON TEST CHARACTERISTICS	2
2.1	Test Location	2
2.2	Test Schedule	2
2.3	Manning and Responsibilities	2
2.4	Termination and Restart of Test	3
2.5	Safety Considerations	3
3.	TEST CONFIGURATION	3
4.	IMCS NAS OT&E/INTEGRATION TEST PROCEDURES	5
4.1	IT1 - IMCS System Initialization and Fault Recovery Test	5
4.2	IT2 - IMCS Data Monitoring Test	8
4.3	IT3 - IMCS Command Test	10
4.4	IT4 - IMCS Alarm Test	13
4.5	IT5 - IMCS/MMS Integrated Function Test	16
4.6	IT6 - IMCS Utility Subsystem Test	18
4.7	IT7 - IMCS Report Subsystem Test	20

APPENDIXES

A - Test Verification Requirements Traceability Matrix (TVRTM)

B - IMCS/MMS System Configuration Requirements

C - Test Conduct Forms

LIST OF ILLUSTRATIONS

Figure		Page
3-1	IMCS Integration Test Configuration	4
4-1	IMCS Integration Test Flow	6

1. INTRODUCTION.

This document describes the procedures for the National Airspace System (NAS) Operational Test and Evaluation (OT&E/Integration testing of the Interim Monitor and Control Software (IMCS). It provides the test location, test schedules, test assumptions, and test operational instructions. NAS OT&E/Integration testing of the IMCS will be planned and executed by ACN-250. All references relevant to this document are available through ACN-250.

1.1 BACKGROUND.

The Federal Aviation Administration (FAA) is currently developing a Remote Maintenance Monitor System (RMMS). The RMMS provides access to various surveillance and navigational aids from a centrally located Maintenance Processor System (MPS). The IMCS provides a vehicle for transfer of data between remote sites and the MPS. The IMCS is designed to monitor and control selected remote systems using a Tandem 6530 terminal or an IBM compatible PC with Tandem 6530 emulation software. The IMCS is a modular real-time interactive monitoring, control, and alarm routing screen-driven system. It has a dynamic data base capable of accommodating multiple users and performing multiple tasks.

1.2 OBJECTIVE.

The purpose of this test is to verify that the IMCS version PCB0703 functions properly in an integrated Maintenance Management System (MMS)/IMCS environment, and that all applicable NAS-SS-1000 (Volume I, Appendix III and Volume V) requirements are fulfilled. The NAS OT&E/Integration of the IMCS consists of the IMCS System Initialization and Fault Recovery Test (IT1), the IMCS Data Monitoring Test (IT2), the IMCS Command Test (IT3), the IMCS Alarm Test (IT4), the IMCS/MMS Integrated Function Test (IT5), the IMCS Utility Subsystem Test (IT6), and the IMCS Report Subsystem Test (IT7).

1.3 REFERENCE DOCUMENTS.

1.3.1 NAS Documentation.

a. Functional and Performance Requirements for the National Airspace System General, NAS-SS-1000, Volume I, December 1986, DOT/FAA.

b. Functional and Performance Requirements for the National Airspace System Maintenance and Operations Support Element, NAS-SS-1000, Volume V, December 1986, DOT/FAA.

c. Remote Maintenance Monitoring System Interface Control Document MPS to RMS and RMSC, NAS-MD-790, June 10, 1986, DOT/FAA.

1.3.2 RMMS Documentation.

a. Draft, IMCS Integration Test Plan and Procedures, October 1989, ACN-230.

b. Interim Monitor and Control Software (IMCS) Operator's Manual, PCB0701, July 1989, DOT/FAA.

c. Interim Monitor and Control Software (IMCS) User's Manual, PCB0701, July 1989, DOT/FAA.

d. Software Design Document (SDD) Interim Monitor and Control Software (IMCS), PCB0701, July 1989, DOT/FAA.

e. Computer Program Functional Specification (CPFS) Interim Monitor and Control Software (IMCS), PCB0701, July 1989, DOT/FAA.

f. Maintenance Management System (MMS) User's Manual, Release A03 (with Rev 1 Incorporated), February 1990, UNISYS Corporation.

g. Maintenance Management System (MMS) System Administrator's Guide, Release A03 (with Rev 1 Incorporated), February 1990, UNISYS Corporation.

h. Air Traffic Control Beacon Interrogator (ATCBI-5) Interface Design Document for the Interim Monitor and Control Software (IMCS) PCB0600, September 1988, DOT/FAA.

2. COMMON TEST CHARACTERISTICS.

2.1 TEST LOCATION.

The NAS OT&E/Integration of the IMCS will be conducted using the ACN-250 test-bed MPS. The ACN-250 test-bed MPS is located at the FAA Technical Center, Atlantic City International Airport, New Jersey.

2.2 TEST SCHEDULE.

Thirty working days have been allocated for NAS OT&E/Integration of the IMCS. Test results will be documented in a letter of findings and a test report. The letter of findings will be delivered 20 working days after completion of the testing. The draft Test Report on the NAS OT&E/Integration of the IMCS will be delivered 45 working days after completion of the testing.

2.3 MANNING AND RESPONSIBILITIES.

The NAS OT&E/Integration of the IMCS includes the following personnel requirements:

a. **Test Manager**. Responsible for briefing the test team, defining the necessary test team assignments, coordinating the test resources, assuring proper recording of the test results, red-lining test procedures to reflect as-tested activities, the coordination of Trouble Reports, and debriefing the test team.

b. **Test Engineers**. Responsible for execution of test activities including operation of the equipment, recording of test data, and analysis of test data to determine results.

c. **MPS Operator**. Responsible for maintaining MPS configuration, assisting in IMCS/MMS startup, and assisting in backing up test data. The MPS operator must be available to maintain MPS operation and support testing if necessary.

2.4 TERMINATION AND RESTART OF TEST.

If it is necessary to terminate any test sequence before its completion, the test sequence shall be restarted from the first test step.

2.5 SAFETY CONSIDERATIONS.

Standard safety practices shall always be observed. The IMCS Initialization and Fault Recovery Test does not require any special safety considerations.

3. TEST CONFIGURATION.

The configuration for the NAS OT&E/Integration of the IMCS is shown in figure 3-1. Remote Monitoring Subsystem (RMS) inputs to the MPS are provided via RMS simulators, since the use of operational RMSs for testing is not feasible. Air Traffic Control Beacon Interrogator (ATCBI-5) RMS simulators, both Common Digitizer Type 1 (CD-1) and Type 2 (CD-2), were chosen for their data base integrity and ease of use. An Air Route Surveillance Radar (ARSR), with CD-1 Remote Control Interface Unit (RCIU) simulator, was chosen to provide a site which does not conform to NAS-MD-790 specifications.

The following hardware and software is required for the NAS OT&E/Integration of the IMCS:

a. The ACN-250 test-bed MPS running MMS version A03.2 and IMCS version PCB0703 (through an integrated PATHWAY), under the B-40 Tandem Operating System.

b. Two tandem 6530 terminals designated as $MMC1 and $SMMC.

c. A MPS system printer.

d. Two ATCBI-5 with CD-1 RMS simulators (version 1.03) running on two Compaq Portable II computers. The simulators receive required clock signals from external modems.

e. One ATCBI-5 with CD-2 RMS simulator (version 1.03) running on a Compaq Portable II computer provides the clock signals for the simulator.

f. One ARSR with CD-1 RCIU simulator (version 4.0).

g. Crosstalk - XVI (version 3.6) communications program running on a Compaq Portable II computer for use as the ARSR with CD-1 RCIU local terminal. The local terminal is connected to the ARSR with CD-1 RCIU simulator for local control of the simulator.

h. One LM1 Protocol Analyzer (version 6.0) running on a Compaq Portable II computer. The LM1 Protocol Analyzer is connected to the MPS/RMS communication lines to monitor each RMS as required.

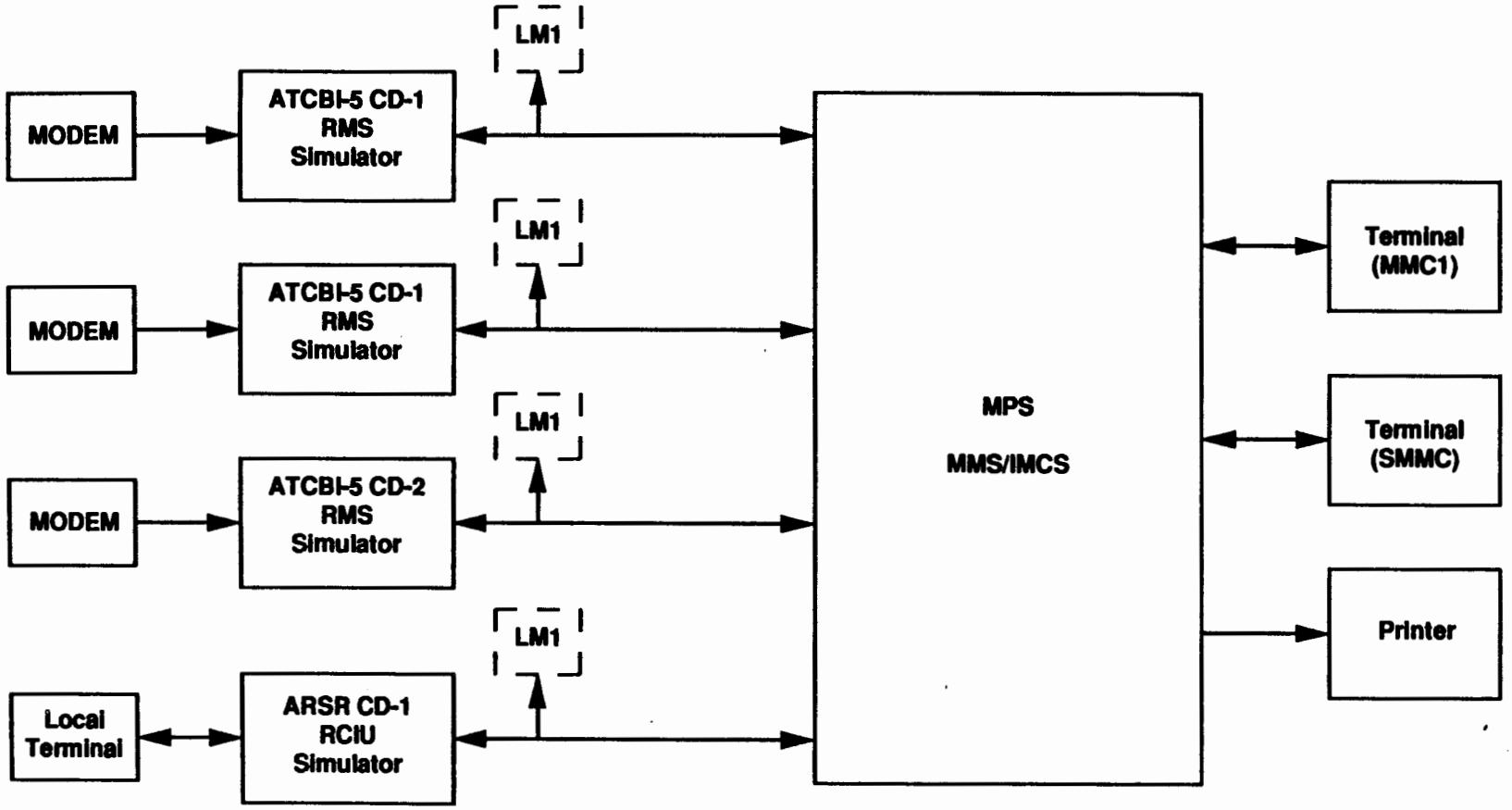

FIGURE 3-1. IMCS INTEGRATION TEST CONFIGURATION

4. IMCS NAS OT&E/INTEGRATION TEST PROCEDURES.

The test approach for the NAS OT&E/Integration of the IMCS is based on the requirements defined in NAS-SS-1000 (reference documents 3.1.a and 3.1.b). The Test Verification Requirements Traceability Matrix (TVRTM), in appendix A, includes a brief description of each requirement, the paragraph number from the NAS-SS-1000 documents to which it can be traced, and the test to which it has been allocated. Procedures for starting up the IMCS/MMS software are provided in appendix B. The step-by-step procedures for each test sequence are detailed in Test Conduct Forms in the test procedures. The test flow diagram in figure 4-1 shows the interrelationships between each of the integration tests.

4.1 IT1 - IMCS SYSTEM INITIALIZATION AND FAULT RECOVERY TEST.

4.1.1 IT1 Objective.

The objective of the IMCS Initialization and Fault Recovery Test is to verify that the IMCS has been properly installed on the MPS and that the IMCS fault recovery procedures perform correctly. IT1 consists of two test sequences: IT1.1, IMCS System Initialization Test; and IT1.2, IMCS Fault Recovery Test.

4.1.2 IT1 Requirements.

The IMCS Initialization and Fault Recovery Test will verify the following NAS-SS-1000 Volume V requirements:

a. The RMMS shall allow the establishing of initial conditions for its subsystems, equipment, and processes.

b. The RMMS shall provide for the storage of data necessary for the process control and management information functions.

4.1.3 IT1 Assumptions and Interdependencies.

For IT1, it is assumed that the MPS equipment and accompanying IMCS and MMS documentation will be available during the test period. IT1 has no interdependencies as it is the first test in the series. It is presumed, however, that a complete functional test of the IMCS and MMS software has been successfully completed.

4.1.4 IT1 Support Hardware and Software.

The following items are required to support IT1 testing:

a. MPS - MMS and IMCS software installed and running;

b. MPS Terminals - displays MMS and IMCS screen data;

c. RMS Simulators - provides a means of testing the communications protocol between the IMCS and the RMSs;

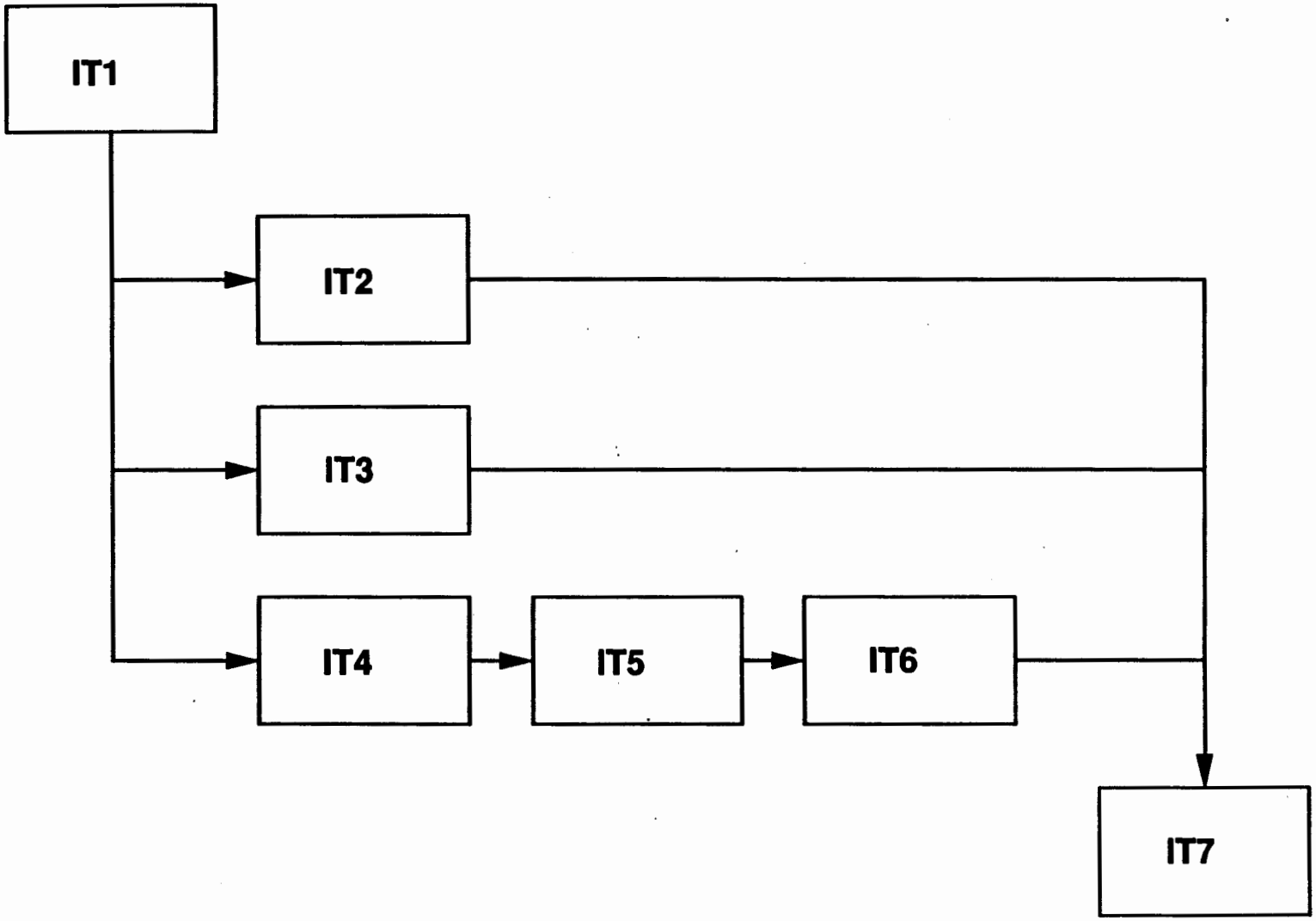

FIGURE 4-1. IMCS INTEGRATION TEST FLOW

d. Printers - as required at the MPS and the RMS simulators;

e. Appropriate software - for RMS Simulators; and

f. LM1 Protocol Analyzer - provides a means for monitoring and recording communications activities between the MPS and the RMSs in the event of communications problems.

4.1.5 IT1 Operation Instructions.

The information required to perform the IMCS Initialization and Fault Recovery Test is provided below.

4.1.5.1 IT1 Setup.

The test configuration for the IMCS System Initialization and Fault Recovery Test is provided in figure 4-1. A brief description of the equipment used in the test configuration is provided in section 4.1.4.

In order to test the IMCS, the test engineer must logon to the host computer and then login to the MMS. The IMCS is then accessed from the MMS. System security will permit access by authorized users only. The specific procedures for starting IMCS/MMS with an integrated PATHWAY are documented in appendix B.

4.1.5.2 IT1 Conduct.

The IMCS Initialization and Fault Recovery Test consists of two test sequences, IT1.1 and IT1.2. The Test Conduct Forms in appendix C contain the step-by-step procedures for IT1.1 and IT1.2.

The IMCS System Initialization Test, IT1.1, will verify:

a. The MPS is properly configured, a magnetic tape is mounted and available for backup, the default and user printers are available and on-line, and the SMMC terminal is configured as a dedicated IMCS terminal.

b. The MMS.MGR, with an appropriate password, can start IMCS/MMS without errors, the IMCS can be accessed from MMS, and the IMCS Constant Monitor screen is displayed.

The IMCS Fault Recovery Test, IT1.2, is performed by the Tandem System Operator and verifies recovery operations for Terminal faults, Printer faults, Comm Line faults, RMS Alarm processing, Power Outage faults, CPU Outage faults, Disk Volume faults, and PATHWAY faults.

4.1.6 IT1 Data Reduction and Analysis.

Data analysis for the IMCS Initialization and Fault Recovery Test will be accomplished by reviewing MPS displays and data collected and stored by the IMCS, the MMS, the RMS Simulators, and the LM1 Protocol Analyzer.

The success of the test will be determined by the system's ability to meet the requirements and give the predicted responses to the procedures presented in the Test Conduct Forms for IT1.

4.2 IT2 - IMCS DATA MONITORING TEST.

4.2.1 IT2 Objective.

The objective of the IMCS Data Monitoring Test is to verify that site status screens can be accessed for each remotely monitored site, and that each monitored parameter is displayed. It also verifies that the IMCS monitoring function presents data that is consistent with the status of the monitored site. IT2 consists of a single test sequence: IT2, Data Monitoring Test.

4.2.2 IT2 Requirements.

The IMCS Data Monitoring Test will verify the following NAS-SS-1000 Volume I requirements:

a. The NAS shall continually monitor subsystem performance to obtain the data needed by specialists for maintenance and operations support.

b. The NAS shall provide the capability to continually monitor the status, alarms/alerts, and performance data of selected subsystems.

c. The NAS shall provide for the monitoring of designated subsystem's performance parameters.

d. The NAS shall provide operating status data including configuration and mode of operation.

e. The NAS shall provide for the monitoring of electrical power and Heating, Ventilating, and Air Conditioning (HVAC) systems in unmanned subsystem facilities (site specific).

f. The NAS shall provide for the monitoring of smoke, fire, physical intrusion, or any other site hazard in unmanned subsystem facilities (site specific).

The IMCS Data Monitor Test will verify the following NAS-SS-1000 Volume V requirements:

a. The MPS shall collect, process, and store subsystem status data from associated Remote Monitoring Subsystem Concentrator (RMSCs) and other RMSs.

b. The MPS shall collect, process, and store monitored parameter data from associated RMSCs and other RMSs.

c. The MPS shall collect, process, and store facility data from associated RMSCs and other RMSs.

d. The MPS shall collect, process, and store physical security data from associated RMSCs and other RMSs.

e. The MPS shall provide all monitored subsystem status data to the maintenance monitor console.

f. The MPS shall provide, upon request, status data for display.

g. The MPS shall periodically collect subsystem status data from NAS subsystems.

h. The MPS shall report subsystem status data to specialists at designated locations.

i. The MPS shall generate an alarm when any RMSC or directly connected RMS fails to report its data.

4.2.3 IT2 Assumptions and Interdependencies.

For IT2, it is assumed that the MPS equipment, RMS Simulators, and accompanying IMCS and MMS documentation will be available during the test period. IT2 requires the successful completion of IT1.

4.2.4 IT2 Support Hardware and Software.

The following items are required to support IT2 testing:

a. MPS - MMS and IMCS software installed and running;

b. MPS Terminals - displays MMS and IMCS screen data;

c. RMS Simulators - provides a means of testing the communications protocol between the IMCS and the RMSs;

d. Printers - as required at the MPS and the RMS Simulators;

e. Appropriate software - for RMS Simulators; and

f. LM1 Protocol Analyzer - provides a means for monitoring and recording RS-232 activities between the MPS and the RMSs in the event of communications problems.

4.2.5 IT2 Operation Instructions.

The information required to perform the IMCS Data Monitoring Test is provided below.

4.2.5.1 IT2 Setup.

The test configuration for the IMCS Data Monitoring Test is provided in figure 3-1. A brief description of the equipment used in the test configuration is provided in section 4.2.4.

In order to test the IMCS, the test engineer must log on to the host computer and then log on to the MMS. The IMCS is then accessed from MMS. System security will permit access by authorized users only. The specific procedures for starting MMS/IMCS with an integrated PATHWAY are documented in appendix B.

4.2.5.2 IT2 Conduct.

The IMCS Data Monitoring Test consists of a single test sequence, IT2. The Test Conduct Forms in appendix C contain the step-by-step procedures for IT2.

The Data Monitoring Test, IT2, will verify the ability to properly:

a. Request status information from a specific RMS;

b. Receive and decode Site Data Report (SDRs), and update the appropriate status screen for a specific RMS;

c. Update the appropriate status screen when state change conditions are reported by an RMS; and

d. Print all pages of a selected status screen.

4.2.6 IT2 Data Reduction and Analysis.

Data analysis for the IMCS Data Monitor Test will be accomplished by reviewing MPS displays and data collected and stored by the IMCS, the MMS, the RMS Simulators, and the LM1 Protocol Analyzer.

The success of the test will be determined by the system's ability to meet the requirements and give the predicted responses to the procedures presented in the Test Conduct Forms for IT2.

4.3 IT3 - IMCS COMMAND TEST.

4.3.1 IT3 Objective.

The objective of the IMCS Command Test is to verify that the IMCS properly sends commands to remote sites. In addition, the ability to identify and reject invalid commands selected by the MPS operator is verified. IT3 consists of two test sequences: IT3.1, Command Test; and IT3.2, Invalid Command Test.

4.3.2 IT3 Requirements.

The IMCS Command Test will verify the following NAS-SS-1000 Volume I requirements:

a. The NAS shall provide for the control to change the current operating mode of a subsystem to any other proper operating mode of a subsystem including ON/OFF.

b. The NAS shall provide the capability to adjust selected subsystem parameters.

c. The NAS shall provide the capability to reset a subsystem.

d. The NAS shall provide for the control of the electrical power and HVAC system in unmanned facilities (site specific).

The IMCS Command Test will verify the following NAS-SS-1000 Volume V requirements:

a. The MPS shall provide the capability for specialists to have ON/OFF control of selected NAS subsystems for maintenance purposes.

b. The MPS shall provide the capability for specialists to make changes to the current operating mode or configuration of selected NAS subsystems for maintenance purposes.

c. The MPS shall provide the capability for a specialist to make subsystem performance parameter adjustments to improve performance and/or restore service.

d. The MPS shall provide the capability for a specialist to make subsystem performance parameter adjustments of selected parameters as an aid in fault isolation.

e. The MPS shall provide the capability for a specialist to make subsystem performance parameter adjustments to restore service (reset).

f. The MPS shall provide the capability to control HVAC and electrical power systems at unmanned facilities.

g. The MPS shall provide the capability for a specialist to obtain exclusive control of a subsystem or part of a subsystem.

4.3.3 IT3 Assumptions and Interdependencies.

For IT3, it is assumed that the MPS equipment, RMS Simulators, and accompanying IMCS and MMS documentation will be available during the test period. IT3 requires the successful completion of IT1.

4.3.4 IT3 Support Hardware and Software.

The following items are required to support IT3 testing;

a. MPS - MMS and IMCS software installed and running;

b. MPS Terminals - displays MMS and IMCS screen data;

c. RMS Simulators - provides a means of testing the communications protocol between the IMCS and the RMSs;

d. Printers - as required at the MPS and the RMS Simulators;

e. Appropriate software - for RMS Simulators; and

f. LM1 Protocol Analyzer - provides a means for monitoring and recording RS-232 activities between the MPS and the RMSs in the event of communications problems.

4.3.5 IT3 Operation Instructions.

The information required to perform the IMCS Command Test is provided below.

4.3.5.1 IT3 Setup.

The test configuration for the IMCS Command Test is provided in figure 3-1. A brief description of the equipment used in the test configuration is provided in section 4.3.4.

In order to test the IMCS, the test engineer must log on to the host computer and then log on to the MMS. The IMCS is then accessed from MMS. System security will permit access by authorized users only. The specific procedures for starting MMS/IMCS with an integrated PATHWAY are documented in appendix B.

4.3.5.2 IT3 Conduct.

The IMCS Command Test consists of two test sequences; IT3.1 and IT3.2. The Test Conduct Forms in appendix C contain the step-by-step procedures for IT3.1 and IT3.2.

The Command Test, IT3.1, will be conducted in the following fashion:

a. Access the Site Configuration command list, and if necessary a command subset list, for a specified RMS. Initiate a command, providing any parameters if necessary. Proper response to the command is displayed. The response may be a message indicating that command was sent to the RMS as well as a message indicating that a response was received from the RMS.

b. Repeat the actions for other RMSs to verify ability to access specified RMS.

The Invalid Command Test, IT3.2, will be conducted in the following fashion:

a. Access the Site Configuration command list, and if necessary a command subset list, for a specified RMS. Initiate a command while purposely providing invalid parameters. Proper response to the command is displayed. The response may be a message indicating that command was sent to the RMS as well as a message indicating that a "command error" response was received from the RMS.

b. Repeat the actions for other RMSs to verify ability to access specified RMS.

4.3.6 IT3 Data Reduction and Analysis.

Data analysis for the IMCS Command Test will be accomplished by reviewing MPS displays and data collected and stored by the IMCS, the MMS, the RMS Simulators, and the LM1 Protocol Analyzer.

The success of the test will be determined by the system's ability to meet the requirements and give the predicted responses to the procedures presented in the Test Conduct Forms for IT3.

4.4 IT4 - IMCS ALARM TEST.

4.4.1 IT4 Objective.

The objective of the IMCS Alarm Test is to verify the ability of the IMCS to properly process and display alarm messages from a remote site. It also verifies the capability to acknowledge active alarms. IT4 consists of a single test sequence: IT4, Alarm Test.

4.4.2 IT4 Requirements.

The IMCS Alarm Test will verify the following NAS-SS-1000 Volume I requirements:

a. The NAS shall provide the status of subsystems to specialists and shall generate an alarm upon the deviation of designated parameters from prescribed limits.

b. The NAS shall provide the capability to continually monitor the status, alarms/alerts, and performance data of selected subsystems.

c. The NAS shall provide an alarm when any designated NAS subsystem monitored parameter is out of tolerance.

d. The NAS shall provide an alarm when smoke, fire, or physical intrusion into a subsystem facility has occurred (site specific).

e. The NAS shall provide an alarm when the electrical power of HVAC monitored parameters are out of tolerance at unmanned facilities (site specific).

f. The NAS shall provide a return-to-normal alarm when an initial alarm condition is cleared.

g. The NAS shall provide an alert when selected subsystem parameters are outside a predetermined range.

The IMCS Alarm Test will verify the following NAS-SS-1000 Volume V requirements:

a. The MPS shall automatically provide data for display of alarm conditions including value of alarm parameter and expected value(s).

b. The MPS shall automatically provide data for display of alarm conditions including equipment identification.

c. The MPS shall automatically provide data for display of alarm conditions including site identification.

d. The MPS shall automatically provide data for display of alarm conditions including time received at MPS.

e. The MPS shall generate an alarm when any RMSC or directly connected RMS fails to report its data.

f. Visual/aural indication of alarms shall be provided by MPS to specialists.

g. Alarm status shall be retained for presentation until the alarm condition is cleared.

h. Specialists shall be provided visual/aural indications identifying alert conditions.

i. Alert status shall be retained for indication until the alert condition is cleared.

j. Active alarms/alerts shall be maintained in the file until the alarm/alert is cleared.

k. The MPS shall generate a return-to-normal alarm when the initial MPS alarm condition is cleared.

4.4.3 IT4 Assumptions and Interdependencies.

For IT4, it is assumed that the MPS equipment, RMS Simulators, and accompanying IMCS and MMS documentation will be available during the test period. IT4 requires the successful completion of IT1.

4.4.4 IT4 Support Hardware and Software.

The following items are required to support IT2 testing:

a. MPS - MMS and IMCS software installed and running;

b. MPS Terminals - displays MMS and IMCS screen data;

c. RMS Simulators - provides a means of testing the communications protocol between the IMCS and the RMSs;

d. Printers - as required at the MPS and the RMS simulators;

e. Appropriate software - for RMS Simulators; and

f. LM1 Protocol Analyzer - provides a means for monitoring and recording RS-232 activities between the MPS and the RMSs in the event of communications problems.

4.4.5 IT4 Operation Instructions.

The information required to perform the IMCS Alarm Test is provided below.

4.4.5.1 IT4 Setup.

The test configuration for the IMCS Alarm Test is provided in figure 3-1. A brief description of the equipment used in the test configuration is provided in section 4.4.4.

In order to test the IMCS, the test engineer must log on to the host computer and then log on to the MMS. The IMCS is then accessed from MMS. System security will permit access by authorized users only. The specific procedures for starting MMS/IMCS with an integrated PATHWAY are documented in appendix B.

4.4.5.2 IT4 Conduct.

The IMCS Alarm Test consists of a single test sequence, IT4. The Test Conduct Forms in appendix C contain the step-by-step procedures for IT4.

The Alarm Test, IT4, will be conducted in the following manner:

a. Receive and decode received alarm(s) and update the Constant Monitor screen. Deny alarm acknowledgement if invalid security parameters are used. Alarm(s) continues to be displayed. Accept alarm acknowledgement when valid security parameters are used. Alarm(s) removed from display.

b. Receive and decode received alarm(s) and update the Active Alarms screen. Deny alarm acknowledgement if invalid security parameters used. Alarm(s) continues to be displayed. Accept alarm acknowledgement when valid security parameters are used. Acknowledged alarm(s) continues to be displayed.

c. Receive and decode received alarm(s) and update the Site Status screen. Deny alarm acknowledgement if invalid security parameters used. Alarm(s) continues to be displayed. Accept alarm acknowledgement when valid security parameters are used. Acknowledged alarm(s) continue to be displayed.

d. Receive and decode received alarm(s) and update the Alarm List screen. Deny alarm acknowledgement if invalid security parameters used. Alarm(s) continues to be displayed. Accept alarm acknowledgement when valid security parameters are used. Acknowledged alarm(s) continue to be displayed.

e. Active Alarm screen indicates MPS/RMS Comm Alert when a communications link between the MPS and an RMS is disabled. Accept alarm acknowledgement when valid security parameters are used. Acknowledged alarm(s) continue to be displayed. MPS/RMS Comm Alarm removed from Constant Monitor screen when communications link is restored.

f. System Maintenance Monitor Console (SMMC) displays appropriate Alarm messages and Return To Normal (RTN) messages when conditions occur at an RMS.

4.4.6 IT4 Data Reduction and Analysis.

Data analysis for the IMCS Alarm Test will be accomplished by reviewing MPS displays and data collected and stored by the IMCS, the MMS, the RMS Simulators, and the LM1 Protocol Analyzer.

The success of the test will be determined by the system's ability to meet the requirements and give the predicted responses to the procedures presented in the Test Conduct Forms for IT4.

FAA WJH Technical Center
00093281

4.5 IT5 - IMCS/MMS INTEGRATED FUNCTION TEST.

4.5.1 IT5 Objective.

The objective of the IMCS/MMS Integrated Function Test is to verify that remote monitoring and maintenance functions of the IMCS and management functions of the MMS can be accessed concurrently without degradation of individual performance. Real-time data transfer and data base updates between the two programs will also be verified. IT5 consists of three test sequences: IT5.1, MMS Logging Subsystem Test; IT5.2, MMS PM/Certification Subsystem Test; and IT5.3, MMS Report Subsystem Test.

4.5.2 IT5 Requirements.

The IMCS/MMS Integrated Function Test will verify the following NAS-SS-1000 Volume V requirements:

a. The MPS shall collect, process, and store message data from associated RMSCs and other RMSs.

b. The MPS shall automatically provide data for display of alarm conditions including equipment identification.

c. The MPS shall automatically provide data for display of alarm conditions including site identification.

d. The MPS shall automatically provide data for display of alarm conditions including time received at MPS.

e. Contents of the status file shall be updated only by the collection function.

4.5.3 IT5 Assumptions and Interdependencies.

For IT5, it is assumed that the MPS equipment, RMS Simulators, and accompanying IMCS and MMS documentation will be available during the test period. IT5 requires the successful completion of IT1 and IT4.

4.5.4 IT5 Support Hardware and Software.

The following items are required to support IT5 testing:

a. MPS - MMS and IMCS software installed and running;

b. MPS Terminals - displays MMS and IMCS screen data;

c. RMS Simulators - provides a means of testing the communications protocol between the IMCS and the RMSs;

d. Printers - as required at the MPS and the RMS simulators;

e. Appropriate software - for RMS Simulators; and

f. LM1 Protocol Analyzer - provides a means for monitoring and recording RS-232 activities between the MPS and the RMSs in the event of communications problems.

4.5.5 IT5 Operation Instructions.

The information required to perform the IMCS/MMS Integrated Function Test is provided below.

4.5.5.1 IT5 Setup.

The test configuration for the IMCS/MMS Integrated Function Test is provided in figure 3-1. A brief description of the equipment used in the test configuration is provided in section 4.5.4.

In order to test the IMCS, the test engineer must log on to the host computer and then log on to the MMS. The IMCS is then accessed from MMS. System security will permit access by authorized users only. The specific procedures for starting MMS/IMCS with an integrated PATHWAY are documented in appendix B.

4.5.5.2 IT5 Conduct.

The IMCS/MMS Integrated Function Test consists of three test sequences; IT5.1, IT5.2, and IT5.3. The Test Conduct Forms in appendix C contain the step-by-step procedures for IT5.1, IT5.2, and IT5.3.

The MMS Logging Subsystem Test, IT5.1, will be conducted in the following manner:

a. Open and generate a log entry in the Administration/General (LAD) file. Close the log entry. Retrieve and void the log entry.

b. Generate a log entry in the Acknowledge Alarms (LRM) file by accessing the Remote Alarms screen, selecting an alarm to acknowledge, and add the log entry. Access the LRM function to verify that the alarm was acknowledged.

The MMS Periodic Maintenance (PM)/Certification Subsystem Test, IT5.2, will be conducted in the following manner:

Add a record to the PM/CERT Task Glossary (PMT) file. Retrieve and modify the record. Retrieve the modified record and delete it from the file.

The MMS Report Subsystem Test, IT5.3, will verify the ability to properly:

a. Access the Report Generation Subsystem (REP); and
b. Select the LOGALL report to be printed at the Line Printer.

4.5.6 IT5 Data Reduction and Analysis.

Data analysis for the IMCS/MMS Integrated Function Recovery Test will be accomplished by reviewing MPS displays and data collected and stored by the IMCS, the MMS, the RMS Simulators, and the LM1 Protocol Analyzer.

The success of the test will be determined by the system's ability to meet the requirements and give the predicted responses to the procedures presented in the Test Conduct Forms for IT5.

4.6 IT6 - IMCS UTILITY SUBSYSTEM TEST.

4.6.1 IT6 Objective.

The objective of the IMCS Utility Subsystem Test is to verify that the IMCS data base and history files can be maintained using the Utility Subsystem, and that proper security functions are implemented. IT6 consists of three test sequences: IT6.1, Data Base Add Utility Test; IT6.2, Data Base Delete Utility Test; and IT6.3, Archive Utility Test.

4.6.2 IT6 Requirements.

The IMCS Utility Subsystem Test will verify the following NAS-SS-1000 Volume I requirement:

The NAS shall provide the specialist access to the monitoring, control, and data management capabilities of the NAS as required and as authorized by administrative directive.

4.6.3 IT6 Assumptions and Interdependencies.

For IT6, it is assumed that the MPS equipment, RMS Simulators, and accompanying IMCS and MMS documentation will be available during the test period. IT6 requires the successful completion of IT1, IT4, and IT5.

4.6.4 IT6 Support Hardware and Software.

The following items are required to support IT6 testing:

a. MPS - MMS and IMCS software installed and running;

b. MPS Terminals - displays MMS and IMCS screen data;

c. RMS Simulators - provides a means of testing the communications protocol between the IMCS and the RMSs;

d. Printers - as required at the MPS and the RMS simulators;

e. Appropriate software - for RMS Simulators;

f. LM1 Protocol Analyzer - provides a means for monitoring and recording RS-232 activities between the MPS and the RMSs in the event of communications problems.

4.6.5 IT6 Operation Instructions.

The information required to perform the IMCS Utility Subsystem Test is provided below.

4.6.5.1 IT6 Setup.

The test configuration for the IMCS Utility Subsystem Test is provided in figure 3-1. A brief description of the equipment used in the test configuration is provided in section 4.6.4.

In order to test the IMCS, the test engineer must logon to the host computer and then login to the MMS. The IMCS is then accessed from MMS. System security will permit access by authorized users only. The specific procedures for starting MMS/IMCS with an integrated PATHWAY are documented in appendix B.

4.6.5.2 IT6 Conduct.

The IMCS Utility Subsystem Test consists of three test sequences; IT6.1, IT6.2, and IT6.3. The Test Conduct Forms in appendix C contain the step-by-step procedures for IT6.1, IT6.2, and IT6.3.

The Data Base Add Utility Test, IT6.1, will be conducted in the following fashion:

a. Access the MMS Facility/Service file. Add a new site to the file. Use the MMS Facility Authorization function to authorize access to the new site.

b. Access the IMCS Utility Subsystem. Attempt to use subsystem using invalid Technician Initials and/or Password is rejected. Valid initials and password allow access.

c. Access Data Base Enable function. Enter information for the new site in the DBADAP, DBSITETB, and DBSTINF files.

d. Access Adapt Facilities function. Enter information for new site in the DBCS, DBCSTBL, and if necessary, the DBCMD79, DBCMD79P, and DBMENU files.

e. Exit IMCS and shut down IMCS/MMS. Restart IMCS/MMS so the new site can be accessed. Verify that the new site is accessible.

The Data Base Delete Utility Test, IT6.2, will be conducted in the following manner:

a. Access Adapt Facilities function of the IMCS Utility Subsystem. Delete the site from the DBCS, DBCSTBL, DBADAP, DBSITETB, and DBSTINF files.

b. Exit IMCS and shutdown IMCS/MMS. Restart IMCS/MMS and verify that the new site is not in the Site Directory and is no longer accessible.

The Archive History Utility Test, IT6.3, will be conducted in the following manner:

a. Access the Archive History function in the Utility Subsystem. Print the archive report.

b. Access the Archive User History function in the Utility Subsystem. Print the archive report.

c. Exit IMCS. Examine ARCHIVE Summary/Exception reports for DBH and DBUSERH files. If any errors, correct and reinitiate ARCHIVE function. Copy archive files to magnetic tape.

4.6.6 IT6 Data Reduction and Analysis.

Data analysis for the IMCS Utility Subsystem Test will be accomplished by reviewing MPS displays and data collected and stored by the IMCS, the MMS, the RMS Simulators, and the LM1 Protocol Analyzer.

The success of the test will be determined by the system's ability to meet the requirements and give the predicted responses to the procedures presented in the Test Conduct Forms for IT6.

4.7 IT7 - IMCS REPORT SUBSYSTEM TEST.

4.7.1 IT7 Objective.

The objective of the IMCS Report Subsystem Test is to verify that the IMCS is capable of generating reports consisting of selected information from the status, history, and user history data base files. IT7 consists of a single test sequence; IT7, Report Generation Test.

4.7.2 IT7 Requirements.

The IMCS Report Subsystem Test will verify the following NAS-SS-1000 Volume I requirements:

a. The NAS shall automatically provide for the accumulation of current subsystem status and performance data in a local data file.

b. The NAS shall provide subsystem data in response to requests from RMMS subsystems.

The IMCS Report Subsystem Test will verify the following NAS-SS-1000 Volume V requirement:

Contents of the status file shall be updated only by the collection function.

4.7.3 IT7 Assumptions and Interdependencies.

For IT7, it is assumed that the MPS equipment, RMS Simulators, and accompanying IMCS and MMS documentation will be available during the test period. IT7 requires the successful completion of IT1 through IT6.

4.7.4 IT7 Support Hardware and Software.

The following items are required to support IT7 testing:

a. MPS - MMS and IMCS software installed and running;

b. MPS Terminals - displays MMS and IMCS screen data;

c. RMS Simulators - provides a means of testing the communications protocol between the IMCS and the RMSs;

d. Printers - as required at the MPS and the RMS simulators;

e. Appropriate software - for RMS Simulators; and

f. LM1 Protocol Analyzer - provides a means for monitoring and recording RS-232 activities between the MPS and the RMSs in the event of communications problems.

4.7.5 IT7 Operation Instructions.

The information required to perform the IMCS Report Subsystem Test is provided below.

4.7.5.1 IT7 Setup.

The test configuration for the IMCS Report Subsystem Test is provided in figure 3-1. A brief description of the equipment used in the test configuration is provided in section 4.7.4.

In order to test the IMCS, the test engineer must log on to the host computer and then log on to the MMS. The IMCS is then accessed from MMS. System security will permit access by authorized users only. The specific procedures for starting MMS/IMCS with an integrated PATHWAY are documented in appendix B.

4.7.5.2 IT7 Conduct.

The IMCS Report Subsystem Test consists of a single test sequence, IT7. The Test Conduct Forms in appendix C contain the step-by-step procedures for IT7.

The Report Subsystem Test, IT7, will be conducted in the following manner:

a. Generate a Status Report for a specified RMS using report selection options. Route the report to a specified device. Provide notification on the display screen that the report has been initiated.

b. Generate a History Report for a specified RMS using report selection options. Route the report to a specified device. Provide notification on the display screen that the report has been initiated.

c. Generate a User History Report for a specified RMS using report selection options. Route the report to a specified device. Provide notification on the display screen that the report has been initiated.

4.7.6 IT7 Data Reduction and Analysis.

Data analysis for the IMCS Report Subsystem Test will be accomplished by reviewing MPS displays and data collected and stored by the IMCS, the MMS, the RMS Simulators, and the LM1 Protocol Analyzer.

The success of the test will be determined by the system's ability to meet the requirements and give the predicted responses to the procedures presented in the Test Conduct Forms for IT7.

APPENDIX A

TEST VERIFICATION REQUIREMENTS TRACEABILITY MATRIX (TVRTM)

Reference Document/ Paragraph #			Cross Reference NAS OT&E/Integration Test Procedures		
NAS-SS-1000 VOLUME I	Requirement Description	Verif. Method.	Test ID	Paragraph#	Notes
3.2.1.1.9.1.a	The NAS shall continually monitor subsystem performance to obtain the data needed by specialists for maintenance and operations support.	D	IT2	4.2	
3.2.1.1.9.1.b	The NAS shall provide the status of subsystems to specialists and shall generate an alarm upon the deviation of designated parameters from prescribed limits.	D	IT4	4.4	
3.2.1.1.9.1.c	The NAS shall provide the capability for a specialist on-site or at an off-site location to control selected subsystems for maintenance purposes.	D	N/A	N/A	
3.2.1.1.9.1.d	The NAS shall provide the specialist the capability to identify the line replaceable unit causing an equipment failure.	D	N/A	N/A	

D - Demonstration; FA - Follow-on Activities; L - Verified by Lower Layer Requirement;
NA - Not Applicable; NI - Not Implemented; NT - Not Tested; P - Passed;
PI - Partially Implemented; PP - Partially Passed

Reference Document/ Paragraph #			Cross Reference NAS OT&E/Integration Procedures		
NAS-SS-1000 VOLUME I	Requirement Description	Verif. Method.	Test ID	Paragraph#	Notes
3.2.1.1.9.1.e	The NAS shall provide the capability to retain the values of all monitored subsystem data and the preventative and corrective maintenance data input by specialists.	D	N/A	N/A	
3.2.1.1.9.1.f	The NAS shall provide for the organization and processing of the information necessary for the management of maintenance resources and the preparation of NAS status reports.	D	N/A	N/A	
3.2.1.1.9.1.g	The NAS shall provide the specialist access to the monitoring, control, and data management capabilities of the NAS as required and as authorized by administrative directive.	D	IT6	4.6	
3.2.1.2.9.a	The NAS shall provide the capability to continually monitor the status, alarms/alerts and performance data of selected subsystems.	D	IT2 IT4	4.2 4.4	

D - Demonstration; FA - Follow-on Activities; L - Verified by Lower Layer Requirement;
NA - Not Applicable; NI - Not Implemented; NT - Not Tested; P - Passed;
PI - Partially Implemented; PP - Partially Passed

Reference Document/ Paragraph #			Cross Reference NAS OT&E/Integration Test Procedures		
NAS-SS-1000 VOLUME I	Requirement Description	Verif. Method.	Test ID	Paragraph#	Notes
3.2.1.2.9.b	The NAS shall provide the capability to detect and present alarms and state changes from selected subsystems to NAS specialists within an average time of 10 seconds and a maximum time (99th percentile) of 60 seconds.	D	F/A	F/A	
3.2.1.2.9.c	The NAS shall provide the capability to execute control commands (that cause a state change) initiated by NAS specialists within an average time of 5 seconds and a maximum time (99th percentile) of 15 seconds.	D	F/A	F/A	
3.2.1.2.9.d	The NAS shall provide the capability to develop and present certification, diagnostic test, and unmanned facility data as requested by NAS specialists or determined in adaptation within an average time of 2 minutes and a maximum time (99th percentile) of 10 minutes.	D	F/A	F/A	

D - Demonstration; FA - Follow-on Activities; L - Verified by Lower Layer Requirement;
NA - Not Applicable; NI - Not Implemented; NT - Not Tested; P - Passed;
PI - Partially Implemented; PP - Partially Passed

Reference Document/ Paragraph #			Cross Reference NAS OT&E/Integration Test Procedures		
NAS-SS-1000 VOLUME I	Requirement Description	Verif. Method.	Test ID	Paragraph#	Notes
3.2.1.2.9.e	The NAS shall provide an acknowledgement to a specialist of a subsystem's receipt of a valid test command, input by the specialist, within an average time of 15 seconds and a maximum time (99th percentile) of 75 seconds.	D	N/A	N/A	
30.1.1.1	The NAS shall provide for the monitoring of designated sub-system's performance parameters.	D	IT2	4.2	
30.1.1.2	The NAS shall provide subsystem operating status data including configuration and mode of operation.	D	IT2	4.2	
30.1.1.3	The NAS shall provide subsystem status reports that contain only state changes and alarms/alerts in response to a subsystem status request.	D	N/A	N/A	

D - Demonstration; FA - Follow-on Activities; L - Verified by Lower Layer Requirement;
NA - Not Applicable; NI - Not Implemented; NT - Not Tested; P - Passed;
PI - Partially Implemented; PP - Partially Passed

Reference Document/ Paragraph #			Cross Reference NAS OT&E/Integration Test Procedures		
NAS-SS-1000 VOLUME I	Requirement Description	Verif. Method.	Test ID	Paragraph#	Notes
30.1.1.4	The NAS shall automatically provide for the accumulation of current subsystem status and performance data in a local data file.	D	IT7	4.7	
30.1.1.5	The NAS shall provide subsystem data in response to requests from RMMS subsystems.	D	IT7	4.7	
30.1.1.6	The NAS shall provide an alarm when any designated NAS subsystem monitored parameter is out of tolerance.	D	IT4	4.4	
30.1.1.7	The NAS shall provide an alarm when smoke, fire, or physical intrusion into a subsystem facility has occurred (site specific).	D	IT4	4.4	
30.1.1.8	The NAS shall provide an alarm when the electrical power or HVAC monitored parameters are out of tolerance at unmanned facilities. (Site specific)	D	IT4	4.4	

D - Demonstration; FA - Follow-on Activities; L - Verified by Lower Layer Requirement;
NA - Not Applicable; NI - Not Implemented; NT - Not Tested; P - Passed;
PI - Partially Implemented; PP - Partially Passed

Reference Document/ Paragraph #	Requirement Description	Verif. Method.	Cross Reference NAS OT&E/Integration Test Procedures		Notes
NAS-SS-1000 VOLUME I			Test ID	Paragraph#	
30.1.1.9	The NAS shall provide a return-to-normal alarm when an initial alarm condition is cleared.	D	IT4	4.4	
30.1.1.10	The NAS shall provide an alert when selected subsystem parameters are outside a predetermined range.	D	IT4	4.4	
30.1.1.11	The NAS shall provide the capability to set or change ranges for subsystem alarm or alert parameters.	D	N/A	N/A	
30.1.1.12	The NAS shall provide for the disabling of a subsystem alarm or alert by a specialist on-site.	D	N/A	N/A	
30.1.1.13	The NAS shall report the disabling of a subsystem alarm or alert as performance data.	D	N/A	N/A	

D - Demonstration; FA - Follow-on Activities; L - Verified by Lower Layer Requirement;
NA - Not Applicable; NI - Not Implemented; NT - Not Tested; P - Passed;
PI - Partially Implemented; PP - Partially Passed

Reference Document/ Paragraph #			Cross Reference NAS OT&E/Integration Test Procedures		
NAS-SS-1000 VOLUME I	Requirement Description	Verif. Method.	Test ID	Paragraph#	Notes
30.1.1.14	The NAS shall provide subsystem certification data in response to a certification exercise.	D	N/A	N/A	
30.1.1.15	The NAS shall provide subsystem diagnostic data in response to a diagnostic test request.	D	N/A	N/A	
30.1.1.16	The NAS shall provide for the monitoring of electrical power and HVAC systems in unmanned subsystem facilities (site specific).	D	IT2	4.2	
30.1.1.17	The NAS shall provide for the monitoring of smoke, fire, physical intrusion or any other site hazard in unmanned subsystem facilities (site specific).	D	IT2	4.2	

D - Demonstration; FA - Follow-on Activities; L - Verified by Lower Layer Requirement;
NA - Not Applicable; NI - Not Implemented; NT - Not Tested; P - Passed;
PI - Partially Implemented; PP - Partially Passed

Reference Document/ Paragraph #			Cross Reference NAS OT&E/Integration Test Procedures		
NAS-SS-1000 VOLUME I	Requirement Description	Verif. Method.	Test ID	Paragraph#	Notes
30.1.1.18	The NAS shall provide for the control to change the current operating mode of a subsystem to any other proper operating mode of a subsystem including ON/OFF.	D	IT3	4.3	
30.1.1.19	The NAS shall provide the capability to adjust selected subsystem parameters.	D	IT3	4.3	
30.1.1.20	The NAS shall provide the capability to reset a subsystem.	D	IT3	4.3	
30.1.1.21	The NAS shall provide for the initiation of subsystem diagnostic tests for the purpose of fault isolation.	D	N/A	N/A	
30.1.1.22	The NAS shall provide for the initiation of subsystem certification exercises.	D	N/A	N/A	
30.1.1.23	The NAS shall provide for the control of the electrical power and HVAC system in unmanned facilities (site specific).	D	IT3	4.3	

D - Demonstration; FA - Follow-on Activities; L - Verified by Lower Layer Requirement;
NA - Not Applicable; NI - Not Implemented; NT - Not Tested; P - Passed;
PI - Partially Implemented; PP - Partially Passed

Reference Document/ Paragraph #			Cross Reference NAS OT&E/Integration Test Procedures		
NAS-SS-1000 VOLUME I	Requirement Description	Verif. Method.	Test ID	Paragraph#	Notes
30.1.1.24	The NAS shall provide for specialist access to the RMMS network through a maintenance data terminal with the proper authorization.	D	N/A	N/A	
30.1.1.25	The NAS shall provide the capability for local input and display of data and commands to a subsystem via the maintenance data terminal.	D	N/A	N/A	
30.1.1.26	The NAS shall provide the specialist the capability to obtain exclusive control of a subsystem while on-site.	D	N/A	N/A	

D - Demonstration; FA - Follow-on Activities; L - Verified by Lower Layer Requirement;
NA - Not Applicable; NI - Not Implemented; NT - Not Tested; P - Passed;
PI - Partially Implemented; PP - Partially Passed

Reference Document/ Paragraph # NAS-SS-1000 VOLUME V	Requirement Description	Verif. Method.	Cross Reference NAS OT&E/Integration Test Procedures		Notes
			Test ID	Paragraph#	
3.2.1.1.1.1.6	The RMMS shall allow for the establishment of initial conditions for its subsystems, equipment, and processes.	D	IT1	4.1	
3.2.1.1.1.1.9	The RMMS shall provide for the storage of data necessary for the process control and management information functions.	D	IT1	4.1	
3.2.1.1.6.1.1.1.a	The MPS shall collect, process, and store subsystem status data from associated RMSCs and other RMSs.	D	IT2	4.2	
3.2.1.1.6.1.1.1.b	The MPS shall collect, process, and store monitored parameter data from associated RMSCs and other RMSs.	D	IT2	4.2	
3.2.1.1.6.1.1.1.c	The MPS shall collect, process, and store certification test data from associated RMSCs and other RMSs.	D	N/A	N/A	

D - Demonstration; FA - Follow-on Activities; L - Verified by Lower Layer Requirement;
NA - Not Applicable; NI - Not Implemented; NT - Not Tested; P - Passed;
PI - Partially Implemented; PP - Partially Passed

Reference Document/ Paragraph # NAS-SS-1000 VOLUME V	Requirement Description	Verif. Method.	Cross Reference NAS OT&E/Integration Test Procedures		Notes
			Test ID	Paragraph#	
3.2.1.1.6.1.1.1.d	The MPS shall collect, process, and store diagnostic test data from associated RMSCs and other RMSs.	D	N/A	N/A	
3.2.1.1.6.1.1.1.e	The MPS shall collect, process, and store facility data from associated RMSCs and other RMSs.	D	IT2	4.2	
3.2.1.1.6.1.1.1.f	The MPS shall collect, process, and store message data from associated RMSCs and other RMSs.	D	IT5	4.5	
3.2.1.1.6.1.1.1.g	The MPS shall collect, process, and store physical security data from associated RMSCs and other RMSs.	D	IT2	4.2	
3.2.1.1.6.1.1.2	The MPS shall collect, process, and store the maintenance status data required for NAS performance reporting from the automation and communications subsystems.	D	N/A	N/A	

D - Demonstration; FA - Follow-on Activities; L - Verified by Lower Layer Requirement;
NA - Not Applicable; NI - Not Implemented; NT - Not Tested; P - Passed;
PI - Partially Implemented; PP - Partially Passed

Reference Document/ Paragraph #			Cross Reference NAS OT&E/Integration Test Procedures		
NAS-SS-1000 VOLUME V	Requirement Description	Verif. Method.	Test ID	Paragraph#	Notes
3.2.1.1.6.1.1.3.a	The MPS shall automatically provide data for display of alarm conditions including value of alarm parameter and expected value(s).	D	IT4	4.4	
3.2.1.1.6.1.1.3.b	The MPS shall automatically provide data for display of alarm conditions including equipment identification.	D	IT4 IT5	4.4 4.5	
3.2.1.1.6.1.1.3.c	The MPS shall automatically provide data for display of alarm conditions including site identification.	D	IT4 IT5	4.4 4.5	
3.2.1.1.6.1.1.3.d	The MPS shall automatically provide data for display of alarm conditions including time received at MPS.	D	IT4 IT5	4.4 4.5	
3.2.1.1.6.1.1.3.e	The MPS shall automatically provide data for display of alarm conditions including responsible workcenter.	D	N/A	N/A	

D - Demonstration; FA - Follow-on Activities; L - Verified by Lower Layer Requirement;
NA - Not Applicable; NI - Not Implemented; NT - Not Tested; P - Passed;
PI - Partially Implemented; PP - Partially Passed

Reference Document/ Paragraph #			Cross Reference NAS OT&E/Integration Test Procedures		
NAS-SS-1000 VOLUME V	Requirement Description	Verif. Method.	Test ID	Paragraph#	Notes
3.2.1.1.6.1.1.4	The MPS shall provide all monitored subsystem status data to the maintenance monitor console.	D	IT2	4.2	
3.2.1.1.6.1.1.5.a	Upon request, the MPS shall provide status data for display.	D	IT2	4.2	
3.2.1.1.6.1.1.5.b	Upon request, the MPS shall provide performance data for display.	D	N/A	N/A	
3.2.1.1.6.1.1.5.c	Upon request, the MPS shall provide message data for display.	D	N/A	N/A	
3.2.1.1.6.1.1.6	The MPS shall periodically collect subsystem status data from NAS subsystems.	D	IT2	4.2	
3.2.1.1.6.1.1.7	The MPS shall report subsystem status data to specialists at designated locations.	D	IT2	4.2	
3.2.1.1.6.1.1.8.a	The MPS shall generate an alarm when any RMSC or directly connected RMS fails to report its data.	D	IT2 IT4	4.2 4.4	

D - Demonstration; FA - Follow-on Activities; L - Verified by Lower Layer Requirement;
NA - Not Applicable; NI - Not Implemented; NT - Not Tested; P - Passed;
PI - Partially Implemented; PP - Partially Passed

Reference Document/ Paragraph #			Cross Reference NAS OT&E/Integration Test Procedures		
NAS-SS-1000 VOLUME V	Requirement Description	Verif. Method.	Test ID	Paragraph#	Notes
3.2.1.1.6.1.1.8.b	The MPS shall generate a return-to-normal alarm when the initial MPS alarm condition is cleared.	D	IT4	4.4	
3.2.1.1.6.1.1.9.a	Visual/aural indication of alarms shall be provided by the MPS to specialists.	D	IT4	4.4	
3.2.1.1.6.1.1.9.b	Specialists shall be able to disable the reporting of an alarm.	D	N/A	N/A	
3.2.1.1.6.1.1.9.c	Specialists actions relating to disabling alarms shall be retained as performance data.	D	N/A	N/A	
3.2.1.1.6.1.1.9.d	Alarms shall be reported to successive locations if not acknowledged within a specified time.	D	N/A	N/A	
3.2.1.1.6.1.1.9.e	Alarm status shall be retained for presentation until the alarm condition is cleared.	D	IT4	4.4	

D - Demonstration; FA - Follow-on Activities; L - Verified by Lower Layer Requirement;
NA - Not Applicable; NI - Not Implemented; NT - Not Tested; P - Passed;
PI - Partially Implemented; PP - Partially Passed

Reference Document/ Paragraph # NAS-SS-1000 VOLUME V	Requirement Description	Verif. Method.	Cross Reference NAS OT&E/Integration Test Procedures		Notes
			Test ID	Paragraph#	
3.2.1.1.6.1.1.10	The MPS shall provide the capability for a specialist to set the range of alarm and alert parameters.	D	N/A	N/A	
3.2.1.1.6.1.1.11.a	Specialists shall be provided visual/aural indications identifying alert conditions.	D	IT4	4.4	
3.2.1.1.6.1.1.11.b	Specialists shall be able to disable the reporting of an alert.	D	N/A	N/A	
3.2.1.1.6.1.1.11.c	Specialists actions relating to disabling alerts shall be reported.	D	N/A	N/A	
3.2.1.1.6.1.1.11.d	Alerts shall be reported to successive locations if not acknowledged within a specified time.	D	N/A	N/A	
3.2.1.1.6.1.1.11.e	Alert status shall be retained for indication until the alert condition is cleared.	D	IT4	4.4	

D - Demonstration; FA - Follow-on Activities; L - Verified by Lower Layer Requirement;
NA - Not Applicable; NI - Not Implemented; NT - Not Tested; P - Passed;
PI - Partially Implemented; PP - Partially Passed

Reference Document/ Paragraph #			Cross Reference NAS OT&E/Integration Test Procedures		
NAS-SS-1000 VOLUME V	Requirement Description	Verif. Method.	Test ID	Paragraph#	Notes
3.2.1.1.6.1.1.12.a	The MPS shall provide the capability for specialists to have on-off control of selected NAS subsystems for maintenance purposes.	D	IT3	4.3	
3.2.1.1.6.1.1.12.b	The MPS shall provide the capability for specialists to make changes to the current operating mode or configuration of selected NAS subsystems for maintenance purposes.	D	IT3	4.3	
3.2.1.1.6.1.1.13.a	The MPS shall provide the capability for a specialist to make subsystem performance parameter adjustments to improve performance and/or restore service.	D	IT3	4.3	
3.2.1.1.6.1.1.13.b	The MPS shall provide the capability for a specialist to make subsystem performance parameter adjustments of selected parameters as an aid in fault isolation.	D	IT3	4.3	

D - Demonstration; FA - Follow-on Activities; L - Verified by Lower Layer Requirement;
NA - Not Applicable; NI - Not Implemented; NT - Not Tested; P - Passed;
PI - Partially Implemented; PP - Partially Passed

Reference Document/ Paragraph #			Cross Reference NAS OT&E/Integration Test Procedures		
NAS-SS-1000 VOLUME V	Requirement Description	Verif. Method.	Test ID	Paragraph#	Notes
3.2.1.1.6.1.1.13.c	The MPS shall provide the capability for a specialist to make subsystem performance parameter adjustments to restore service (reset).	D	IT3	4.3	
3.2.1.1.6.1.1.14	The MPS shall provide the capability to control HVAC and electrical power systems at unmanned facilities.	D	IT3	4.3	
3.2.1.1.6.1.1.15	The MPS shall provide the capability for a specialist to initiate subsystem tests remotely for the purposes of certification and diagnostics.	D	N/A	N/A	
3.2.1.1.6.1.1.16	The MPS shall provide the capability for a specialist to obtain exclusive control of a subsystem or part of a subsystem.	D	IT3	4.3	
3.2.1.1.6.1.1.17	The MPS shall provide the capability to analyze subsystem performance data.	D	N/A	N/A	

D - Demonstration; FA - Follow-on Activities; L - Verified by Lower Layer Requirement;
NA - Not Applicable; NI - Not Implemented; NT - Not Tested; P - Passed;
PI - Partially Implemented; PP - Partially Passed

Reference Document/ Paragraph #	Requirement Description	Verif. Method.	Cross Reference NAS OT&E/Integration Test Procedures		Notes
NAS-SS-1000 VOLUME V			Test ID	Paragraph#	
3.2.1.1.6.1.1.18.a	Contents of the current status file shall be updated only by the collection function.	D	IT5 IT7	4.5 4.7	
3.2.1.1.6.1.1.18.b	Active alarms/alerts shall be maintained in the current status file until the alarm/alert is cleared.	D	IT4	4.4	
3.2.1.1.6.1.1.19	The MPS shall provide an automated certification capability to specialists.	D	N/A	N/A	
3.2.1.1.6.1.1.20	The MPS shall provide input/output ports to accommodate the number of RMS, RMSC, MDT, MPS, and external devices as determined in adaptation.	D	N/A	N/A	
3.2.1.1.6.1.1.21	The MPS shall provide for the effective management of interfacing subsystems and devices outside of its central processing unit.	D	N/A	N/A	

D - Demonstration; FA - Follow-on Activities; L - Verified by Lower Layer Requirement;
NA - Not Applicable; NI - Not Implemented; NT - Not Tested; P - Passed;
PI - Partially Implemented; PP - Partially Passed

Reference Document/ Paragraph #			Cross Reference NAS OT&E/Integration Test Procedures		
NAS-SS-1000 VOLUME V	Requirement Description	Verif. Method.	Test ID	Paragraph#	Notes
3.2.1.1.6.1.1.22	The MPS shall maintain a file of NAS subsystem parameters which include alarm/alert limits and other data necessary to define and control the operation of the NAS subsystem.	D	N/A	N/A	
3.2.1.1.6.1.1.23	The MPS shall be accessible from the commercial telephone network.	D	N/A	N/A	

D - Demonstration; FA - Follow-on Activities; L - Verified by Lower Layer Requirement;
NA - Not Applicable; NI - Not Implemented; NT - Not Tested; P - Passed;
PI - Partially Implemented; PP - Partially Passed

APPENDIX B

IMCS/MMS SYSTEM CONFIGURATION REQUIREMENTS

IMCS/MMS SYSTEM CONFIGURATION REQUIREMENTS

ACN-250 Maintenance Processor Subsystem (MPS) testbed software requirements:

a. Interim Monitoring and Control Software (IMCS) version PCB0703 integrated with Maintenance Management System (MMS) software version A03.2.

b. Tandem GUARDIAN

MMS and IMCS PATHWAY startup procedures:

a. :LOGON MMS.MGR, <password>

b. :OBEY MMSPWAY.PATHCOLD

MMS and IMCS PATHWAY shutdown procedures:

a. :LOGON MMS.MGR, <password>

b. :OBEY MMSPWAY.PATHSHUT

APPENDIX C

TEST CONDUCT FORMS

TEST DATA SHEET

IT1.1 IMCS System Initialization Test

Date: _____ Time: _____ MPS Time: _____

Test Configuration Figure: 9-1

SYSTEM SETUP		YES	NO
MPS:	Is the system configured as required?	____	____
TAPE1:	Load a magnetic tape to be used for backup.	____	____
PTR:	Is the default printer (for screen printing) on-line?	____	____
LP:	Is the user printer (for printing files) on-line?	____	____
SMMC:	Pause the SMMC terminal to enable it for use as a dedicated IMCS terminal.		
MMC1:	Logon as MMS.MGR, using the proper password required for accessing IMCS/MMS.	____	____
MMC1:	Start IMCS/MMS using OBEY PATHCOLD. IMCS/MMS start with no errors?	____	____
SMMC:	IMCS Constant Monitor screen is displayed?	____	____
MMC1:	Access MMS using OBEY GO. MMS Main Menu screen is displayed?	____	____
MMC1:	Access IMCS. IMCS Constant Monitor screen is displayed?	____	____

Comments/Notes:

Test Completed Date:_____ Time:_____

TEST DATA SHEET

IT1.2 IMCS Fault Recovery Test

Date: _____ Time: _____ MPS Time: _____

Test Configuration Figure: 9-1

		YES	NO
MPS:	Configured as required?	____	____
PTR:	Is the default printer on-line?	____	____
LP:	Is the user printer on-line?	____	____
MMC1:	Displays IMCS Constant Monitor screen?	____	____
SMMC:	Configured as a dedicated terminal for IMCS, and displays IMCS Constant Monitor screen?	____	____
RMS1:	Configured as required?	____	____
RMS2:	Configured as required?	____	____
RMS3:	Configured as required?	____	____
RMS4:	Configured as required?	____	____
	NOTE: A Tandem System Operator is required for Fault Recovery testing.		
MPS:	Perform a **FULL BACKUP** of the system before proceeding with fault recovery testing.	____	____

Terminal Fault Recovery

SMMC:	Reset the SMMC <SHFT-RESET>.	____	____
SMMC:	Terminal resets and IMCS Constant Monitor screen is displayed?	____	____
SMMC:	Active alarms are displayed?	____	____
SMMC:	Verify that keyboard input is accepted and processed.	____	____

Comments/Notes:

TEST DATA SHEET

IT1.2 IMCS Fault Recovery Test

Date: _____ Time: _____ MPS Time: _____

Test Configuration Figure: 9-1

		YES	NO
SMMC:	Exit IMCS.	____	____
MMC1:	Restart the SMMC terminal using OBEY TERMSTRT.	____	____
SMMC:	IMCS Constant Monitor screen is displayed?	____	____
SMMC:	Active alarms are displayed?	____	____
SMMC:	Verify that keyboard input is accepted and processed.	____	____
MMC1:	Halt the SMMC terminal using OBEY TERMSTOP.	____	____
SMMC:	Terminal processing is stopped?	____	____
MMC1:	Restart the SMMC terminal using OBEY TERMSTRT.	____	____
SMMC:	IMCS Constant Monitor screen is displayed?	____	____
SMMC:	Active alarms are displayed?	____	____
SMMC:	Verify that keyboard input is accepted and processed.	____	____
MMC1:	Disconnect input power cable of terminal MMC1. Wait 5 seconds and reconnect.	____	____
MMC1:	Terminal resets and IMCS Constant Monitor screen is displayed?	____	____
MMC1:	Active alarms are displayed?	____	____
MMC1:	Verify that keyboard input is accepted and processed.	____	____

Comments/Notes:

TEST DATA SHEET

IT1.2 IMCS Fault Recovery Test

Date: _____ Time: _____ MPS Time: _____

Test Configuration Figure: 9-1

		YES	NO
Printer Fault Recovery			
MPS:	Halt the Tandem Spooler process.	____	____
MMC1:	Attempt to print the Constant Monitor screen.	____	____
SMMC:	IMCS displays error message indicating Spooler process/printer failure.	____	____
MPS:	Restart the Spooler process.	____	____
MMC1:	Print the Constant Monitor screen.	____	____
PTR:	Printer functions restored?	____	____
LP:	Printer functions restored?	____	____
Comm Line Fault Recovery			
RMS1:	Disconnect the Comm Line to the MPS.	____	____
MMC1:	Comm Alarm reported for RMS1?	____	____
RMS1:	Re-connect the Comm Line to the MPS.	____	____
MMC1:	Return to normal message reported for RMS1 Comm Alarm?	____	____
RMS Alarm Processing			
RMS1:	Set the Auto Alarm interval to generate numerous alarm messages.	____	____
RMS2:	Set the Auto Alarm interval to generate numerous alarm messages.	____	____
RMS3:	Set the Auto Alarm interval to generate numerous alarm messages.	____	____

Comments/Notes:

TEST DATA SHEET

IT1.2 IMCS Fault Recovery Test

Date: _____ Time: _____ MPS Time: _____

Test Configuration Figure: 9-1

		YES	NO
RMS4:	Set the Auto Alarm interval to generate numerous alarm messages.	____	____
MMC1:	All alarm messages are processed and displayed on the Constant Monitor and Active Alarm screens.	____	____
MMC1:	No interruption of IMCS functions or system errors occur.	____	____
RMS1:	Set the Auto Alarm interval to cease generation of alarm messages.	____	____
RMS2:	Set the Auto Alarm interval to cease generation of alarm messages.	____	____
RMS3:	Set the Auto Alarm interval to cease generation of alarm messages.	____	____
RMS4:	Set the Auto Alarm interval to cease generation of alarm messages.	____	____
Power Outage Fault Recovery			
MPS:	Induce an input power outage and maintain for 5 minutes.	____	____
MPS:	Tandem battery backup retains status information on all processes?	____	____
MPS:	Restore normal power to the system.	____	____
MMC1:	IMCS functions are restored to normal operations. No system errors occur.	____	____

Comments/Notes:

TEST DATA SHEET

IT1.2 IMCS Fault Recovery Test

Date: _____ Time: _____ MPS Time: _____

Test Configuration Figure: 9-1

		YES	NO
CPU Outage Fault Recovery			
	NOTE: DO NOT PUP DOWN CPU 0.		
MPS:	Using Tandem PUP utility, down CPU 1.	____	____
MMC1:	IMCS processes continue to run on the remaining CPUs. Some degradation of performance is expected.	____	____
MPS:	PUP down CPU 2.	____	____
MMC1:	IMCS processes continue to run on the remaining CPUs. Some degradation of performance is expected.	____	____
MPS:	PUP down CPU 3.	____	____
MMC1:	IMCS processes continue to run on the remaining CPUs. Some degradation of performance is expected.	____	____
MPS:	PUP down CPU 4.	____	____
MMC1:	IMCS processes continue to run on the remaining CPUs. Some degradation of performance is expected.	____	____
MPS:	PUP up CPUs 1 through 4.	____	____
MMC1:	IMCS processes continue to run without interruption. No system errors occur.	____	____

Comments/Notes:

TEST DATA SHEET

IT1.2 IMCS Fault Recovery Test

Date: _____ Time: _____ MPS Time: _____

Test Configuration Figure: 9-1

		YES	NO
Disk Volume Fault Recovery			
	NOTE: DO NOT PUP DOWN $SYSTEM.		
MPS:	Using Tandem PUP utility, down $DATA1.	____	____
MMC1:	IMCS processes continue to run without interruption. Database files on $DATA1 will not be accessible.	____	____
MPS:	PUP down $DATA2.	____	____
MMC1:	IMCS processes continue to run without interruption. Database files on $DATA2 will not be accessible.	____	____
MPS:	PUP down $WORK.	____	____
MMC1:	IMCS processes continue to run without interruption. Database files on $WORK will not be accessible.	____	____
MPS:	PUP up $DATA1, $DATA2, and $WORK. No system errors occur?	____	____
MMC1:	IMCS processes continue to run without interruption?	____	____
MMC1:	All database files on all disk volumes are accessible? No loss of data is experienced.	____	____

Comments/Notes:

TEST DATA SHEET

IT1.2 IMCS Fault Recovery Test

Date: _____ Time: _____ MPS Time: _____

Test Configuration Figure: 9-1

		YES	NO
PATHWAY Fault Recovery			
MPS:	Stop the PRIMARY process of selected PATHWAY processes of IMCS and MMS.	____	____
MMC1:	IMCS/MMS processes continue to run without interruption. No loss of data is experienced.	____	____

Comments/Notes:

Test Completed Date:_____ Time:_____

TEST DATA SHEET

IT2 - Data Monitoring Test

Date: _____ Time: _____ MPS Time: _____

Test Configuration Figure: 9-2

		YES	NO
MPS:	Configured as required?	____	____
MMC1:	Displays IMCS Constant Monitor screen?	____	____
PTR:	Destination printer (PTR) for screens is online?	____	____
RMS1:	Configure an ATCBI-5 CD-1 RMS simulator as RMS1. RMS1 Site ID: _____	____	____
RMS2:	Configure an ATCBI-5 CD-2 RMS simulator as RMS2. RMS2 Site ID: _____	____	____
RMS3:	Configure an ARSR Solid State CD-1 RCIU simulator as RMS3. RMS3 Site ID: _____	____	____
ATCBI-5 CD-1 Site Status Monitoring			
MMC1:	Access the Site Configuration command list for RMS1.	____	____
MMC1:	Send an ALL STATUS command.	____	____
RMS1:	Returns Site Data Reports (SDRs) for all Logical Units (LUs)?	____	____

Comments/Notes:

TEST DATA SHEET

IT2 - Data Monitoring Test

Date: _____ Time: _____ MPS Time: _____

Test Configuration Figure: 9-2

		YES	NO
MMC1:	Send a STATUS command.	____	____
RMS1:	Returns a SDR for LU 20?	____	____
MMC1:	Updates the status of the LU20 data points on the Site Configuration status screen?	____	____
MMC1:	Print all pages of the Site Configuration status screen.	____	____
MMC1:	Access the ATCBI-5 Channel 1 Status command list for RMS1.	____	____
MMC1:	Send a CH1 STATUS command.	____	____
RMS1:	Returns a SDR for LU 24?	____	____
MMC1:	Updates the status of the ATCBI-5 Channel 1 Status screen?	____	____
MMC1:	Print all pages of the ATCBI-5 Channel 1 Status screen.	____	____
MMC1:	Access the ATCBI-5 Channel 2 Status command list for RMS1.	____	____
MMC1:	Send a CH2 STATUS command.	____	____
RMS1:	Returns a SDR for LU 25?	____	____
MMC1:	Updates the status of the ATCBI-5 Channel 2 Status screen?	____	____
MMC1:	Print all pages of the ATCBI-5 Channel 2 Status screen.	____	____

Comments/Notes:

TEST DATA SHEET

IT2 - Data Monitoring Test

Date: _____ Time: _____ MPS Time: _____

Test Configuration Figure: 9-2

		YES	NO
MMC1:	Access the CD-1 Status command list for RMS1.	____	____
MMC1:	Send a STATUS command.	____	____
RMS1:	Returns a SDR for LU 28?	____	____
MMC1:	Updates the status of the CD-1 Status screen?	____	____
MMC1:	Print all pages of the CD-1 Status screen.	____	____
MMC1:	Access the Azimuth Data Unit (ADU) Status command list for RMS1.	____	____
MMC1:	Send a STATUS command.	____	____
RMS1:	Returns a SDR for LU 29?	____	____
MMC1:	Updates the status of the ADU Status screen?	____	____
MMC1:	Print all pages of the ADU Status screen.	____	____
MMC1:	Access the Environmental Site Status command list for RMS1.	____	____
MMC1:	Send a STATUS command.	____	____
RMS1:	Returns a SDR for LU 22?	____	____
MMC1:	Updates the status of the Environmental Site Status, Commercial Status, and Engine Generator Status screens?	____	____

Comments/Notes:

TEST DATA SHEET

IT2 - Data Monitoring Test

Date: _____ Time: _____ MPS Time: _____

Test Configuration Figure: 9-2

		YES	NO
MMC1:	Print all pages of the Environmental Site Status screen.	____	____
MMC1:	Print all pages of the Commercial Status screen.	____	____
MMC1:	Print all pages of the Engine Generator Status screen.	____	____

ATCBI-5 CD-1 Site Status Change Monitoring

RMS1:	Induce a State Change condition.		
MMC1:	Updates proper status screen with current status?	____	____
MMC1:	Print all pages of the proper status screen.	____	____
RMS1:	Induce a State Change condition.		
MMC1:	Updates proper status screen with current status?	____	____
MMC1:	Print all pages of the proper status screen.	____	____
RMS1:	Induce a State Change condition.		
MMC1:	Updates proper status screen with current status?	____	____
MMC1:	Print all pages of the proper status screen.	____	____
RMS1:	Induce a State Change condition.		
MMC1:	Updates proper status screen with current status?	____	____
MMC1:	Print all pages of the proper status screen.	____	____

Comments/Notes:

TEST DATA SHEET

IT2 - Data Monitoring Test

Date: _____ Time: _____ MPS Time: _____

Test Configuration Figure: 9-2

		YES	NO
ATCBI-5 CD-2 Site Status Monitoring			
MMC1:	Access the Site Configuration command list for RMS2.	____	____
MMC1:	Send an ALL STATUS command.	____	____
RMS2:	Returns Site Data Reports (SDRs) for all Logical Units (LUs)?	____	____
MMC1:	Send a STATUS command.	____	____
RMS2:	Returns a SDR for LU 20?	____	____
MMC1:	Updates the status of the LU20 data points on the Site Configuration status screen?	____	____
MMC1:	Print all pages of the Site Configuration status screen.	____	____
MMC1:	Access the ATCBI-5 Channel 1 Status command list for RMS2.	____	____
MMC1:	Send a CH1 STATUS command.	____	____
RMS2:	Returns a SDR for LU 24?	____	____
MMC1:	Updates the status of the ATCBI-5 Channel 1 Status screen?	____	____
MMC1:	Print all pages of the ATCBI-5 Channel 1 Status screen.	____	____

Comments/Notes:

TEST DATA SHEET

IT2 - Data Monitoring Test

Date: _____ Time: _____ MPS Time: _____

Test Configuration Figure: 9-2

		YES	NO
MMC1:	Access the ATCBI-5 Channel 2 Status command list for RMS2.	____	____
MMC1:	Send a CH2 STATUS command.	____	____
RMS2:	Returns a SDR for LU 25?	____	____
MMC1:	Updates the status of the ATCBI-5 Channel 2 Status screen?	____	____
MMC1:	Print all pages of the ATCBI-5 Channel 2 Status screen.	____	____
MMC1:	Access the CD-2 Channel A Status command list for RMS2.	____	____
MMC1:	Send a STATUS command.	____	____
RMS2:	Returns a SDR for LU 26?	____	____
MMC1:	Updates the status of the CD-2 Channel A Status screen?	____	____
MMC1:	Print all pages of the CD-2 Channel A Status screen.	____	____
MMC1:	Access the CD-2 Channel B Status command list for RMS2.	____	____
MMC1:	Send a STATUS command.	____	____
RMS2:	Returns a SDR for LU 27?	____	____
MMC1:	Updates the status of the CD-2 Channel B Status screen?	____	____
MMC1:	Print all pages of the CD-2 Channel B Status screen.	____	____

Comments/Notes:

TEST DATA SHEET

IT2 - Data Monitoring Test

Date: _____ Time: _____ MPS Time: _____

Test Configuration Figure: 9-2

		YES	NO
MMC1:	Access the ADU Status command list for RMS2.	____	____
MMC1:	Send a STATUS command.	____	____
RMS2:	Returns a SDR for LU 29?	____	____
MMC1:	Updates the status of the ADU Status screen?	____	____
MMC1:	Print all pages of the ADU Status screen.	____	____
MMC1:	Access the Environmental Site Status command list for RMS2.	____	____
MMC1:	Send a STATUS command.	____	____
RMS2:	Returns a SDR for LU 22?	____	____
MMC1:	Updates the status of the Environmental Site Status, Commercial Status, and Engine Generator Status screens?	____	____
MMC1:	Print all pages of the Environmental Site Status screen.	____	____
MMC1:	Print all pages of the Commercial Status screen.	____	____
MMC1:	Print all pages of the Engine Generator Status screen.	____	____

Comments/Notes:

TEST DATA SHEET

IT2 - Data Monitoring Test

Date: _____ Time: _____ MPS Time: _____

Test Configuration Figure: 9-2

		YES	NO
ATCBI-5 CD-2 Site Status Change Monitoring			
RMS1:	Induce a State Change condition.		
MMC1:	Updates proper status screen with current status?	____	____
MMC1:	Print all pages of the proper status screen.	____	____
RMS1:	Induce a State Change condition.		
MMC1:	Updates proper status screen with current status?	____	____
MMC1:	Print all pages of the proper status screen.	____	____
RMS1:	Induce a State Change condition.		
MMC1:	Updates proper status screen with current status?	____	____
MMC1:	Print all pages of the proper status screen.	____	____
RMS1:	Induce a State Change condition.		
MMC1:	Updates proper status screen with current status?	____	____
MMC1:	Print all pages of the proper status screen.	____	____

Comments/Notes:

TEST DATA SHEET

IT2 - Data Monitoring Test

Date: _____ Time: _____ MPS Time: _____

Test Configuration Figure: 9-2

		YES	NO
ARSR RCIU Site Status Monitoring			
MMC1:	Access the command list for RMS3.	____	____
MMC1:	Send a STATUS command.	____	____
RMS3:	Returns a SDR?	____	____
MMC1:	Updates the status screen?	____	____
MMC1:	Print all pages of the status screen.	____	____
ARSR RCIU Site Status Change Monitoring			
RMS3:	Induce a State Change condition.		
MMC1:	Updates proper status screen with current status?	____	____
MMC1:	Print all pages of the proper status screen.	____	____
RMS3:	Induce a State Change condition.		
MMC1:	Updates proper status screen with current status?	____	____
MMC1:	Print all pages of the proper status screen.	____	____
RMS3:	Induce a State Change condition.		
MMC1:	Updates proper status screen with current status?	____	____
MMC1:	Print all pages of the proper status screen.	____	____

Comments/Notes:

TEST DATA SHEET

IT2 - Data Monitoring Test

Date: _____ Time: _____ MPS Time: _____

Test Configuration Figure: 9-2

		YES	NO
RMS3:	Induce a State Change condition.		
MMC1:	Updates proper status screen with current status?	____	____
MMC1:	Print all pages of the proper status screen.	____	____
RMS3:	Induce a State Change condition.		
MMC1:	Updates proper status screen with current status?	____	____
MMC1:	Print all pages of the proper status screen.	____	____

Comments/Notes:

Test Completed Date:_____ Time:_____

TEST DATA SHEET

IT3.1 - Command Test

Date: _____ Time: _____ MPS Time: _____

Test Configuration Figure: 9-2

		YES	NO
MPS:	Configured as required?	____	____
MMC1:	Access the Constant Monitor screen	____	____
RMS1:	Configure an ATCBI-5 CD-1 RMS simulator as RMS1. RMS1 Site ID: _____	____	____
RMS2:	Configure an ATCBI-5 CD-1 RMS simulator as RMS2. RMS2 Site ID: _____	____	____
RMS3:	Configure an ATCBI-5 CD-2 RMS simulator as RMS3. RMS3 Site ID: _____	____	____
RMS4:	Configure an ARSR Solid State CD-1 RCIU simulator as RMS4. RMS4 Site ID: _____	____	____

RMS1 Command Test

LM1:	Configure the LM1 Protocol Analyzer to monitor and capture data for RMS1.	____	____
MMC1:	Access the Site Configuration command list for RMS1.	____	____
MMC1:	Send an ALL STATUS command.	____	____
RMS1:	Returns Site Data Reports (SDRs) for all Logical Units (LUs)?	____	____

Comments/Notes:

TEST DATA SHEET

IT3.1 - Command Test

Date: _____ Time: _____ MPS Time: _____

Test Configuration Figure: 9-2

		YES	NO
MMC1:	Access the ATCBI Certification Parameters command list for RMS1.	____	____
MMC1:	Send an ATCBI CH CHG A/M - MANUAL command.	____	____
RMS1:	Indicates receipt of command?	____	____
LM1:	Press <F7> and record hex data MPS Command: _____ RMS Response: _____		
MMC1:	Send an ATCBI CH SELECT - CH2 command.	____	____
RMS1:	Indicates receipt of command?	____	____
LM1:	Press <F7> and record hex data: MPS Command: _____ RMS Response: _____		
MMC1:	Send an ATCBI CH SELECT - CH1 command.	____	____
RMS1:	Indicates receipt of command?	____	____
LM1:	Press <F7> and record hex data MPS Command: _____ RMS Response: _____		
MMC1:	Send an ATCBI CH CHG A/M - AUTO command.	____	____
RMS1:	Indicates receipt of command?	____	____
LM1:	Press <F7> and record hex data MPS Command: _____ RMS Response: _____		

Comments/Notes:

TEST DATA SHEET

IT3.1 - Command Test

Date: _____ Time: _____ MPS Time: _____

Test Configuration Figure: 9-2

		YES	NO
MMC1:	Send a RECV CH CHG A/M - MANUAL command.	____	____
RMS1:	Indicates receipt of command?	____	____
LM1:	Press <F7> and record hex data		
	MPS Command: _____		
	RMS Response: _____		
MMC1:	Send a RECV CH CHG A/M - AUTO command.	____	____
RMS1:	Indicates receipt of command?	____	____
LM1:	Press <F7> and record hex data		
	MPS Command: _____		
	RMS Response: _____		
MMC1:	Send a STBY HV VOLTAGE - ON command.	____	____
RMS1:	Indicates receipt of command?	____	____
LM1:	Press <F7> and record hex data		
	MPS Command: _____		
	RMS Response: _____		
MMC1:	Send a STBY HV VOLTAGE - OFF command.	____	____
RMS1:	Indicates receipt of command?	____	____
LM1:	Press <F7> and record hex data		
	MPS Command: _____		
	RMS Response: _____		
MMC1:	Send a CH1 PWR ADJ A/M - MANUAL command.	____	____
RMS1:	Indicates receipt of command?	____	____
LM1:	Press <F7> and record hex data		
	MPS Command: _____		
	RMS Response: _____		

Comments/Notes:

TEST DATA SHEET

IT3.1 - Command Test

Date: _____ Time: _____ MPS Time: _____

Test Configuration Figure: 9-2

		YES	NO
MMC1:	Send a CH1 PR ADJ STEP - UP command.	____	____
RMS1:	Indicates receipt of command?	____	____
LM1:	Press <F7> and record hex data		
	MPS Command: _____		
	RMS Response: _____		
MMC1:	Send a CH1 PR ADJ STEP - DOWN command.	____	____
RMS1:	Indicates receipt of command?	____	____
LM1:	Press <F7> and record hex data		
	MPS Command: _____		
	RMS Response: _____		
MMC1:	Send a CH1 PWR ADJ A/M - AUTO command.	____	____
RMS1:	Indicates receipt of command?	____	____
LM1:	Press <F7> and record hex data		
	MPS Command: _____		
	RMS Response: _____		
MMC1:	Send a CH2 PWR ADJ A/M - MANUAL command.	____	____
RMS1:	Indicates receipt of command?	____	____
LM1:	Press <F7> and record hex data		
	MPS Command: _____		
	RMS Response: _____		
MMC1:	Send a CH2 PR ADJ STEP - UP command.	____	____
RMS1:	Indicates receipt of command?	____	____
LM1:	Press <F7> and record hex data		
	MPS Command: _____		
	RMS Response: _____		

Comments/Notes:

TEST DATA SHEET

IT3.1 - Command Test

Date: _____ Time: _____ MPS Time: _____

Test Configuration Figure: 9-2

		YES	NO
MMC1:	Send a CH2 PR ADJ STEP - DOWN command.	____	____
RMS1:	Indicates receipt of command?	____	____
LM1:	Press <F7> and record hex data		
	MPS Command: _____		
	RMS Response: _____		
MMC1:	Send a CH2 PWR ADJ A/M - AUTO command.	____	____
RMS1:	Indicates receipt of command?	____	____
LM1:	Press <F7> and record hex data		
	MPS Command: _____		
	RMS Response: _____		
MMC1:	Send a CH1 STATUS command.	____	____
RMS1:	Returns a SDR for LU 24?	____	____
LM1:	Press <F7> and record hex data		
	MPS Command: _____		
MMC1:	Send a CH2 STATUS command.	____	____
RMS1:	Returns a SDR for LU 25?	____	____
LM1:	Press <F7> and record hex data		
	MPS Command: _____		
MMC1:	Access the Site Configuration command list for RMS1. ____ ____		
MMC1:	Send an ALL STATUS command.	____	____
RMS1:	Returns SDRs for all LUs?	____	____
LM1:	Press <F7> and record hex data		
	MPS Command: _____		

Comments/Notes:

TEST DATA SHEET

IT3.1 - Command Test

Date: _____ Time: _____ MPS Time: _____

Test Configuration Figure: 9-2

		YES	NO
MMC1:	Access the Commercial Status command list for RMS1.	____	____
MMC1:	Send a STATUS command.	____	____
RMS1:	Returns a SDR for LU 22?	____	____
LM1:	Press <F7> and record hex data MPS Command: _____		
MMC1:	Send an EG1 START - ST ON EQUIP command.	____	____
RMS1:	Indicates receipt of command?	____	____
LM1:	Press <F7> and record hex data MPS Command: _____ RMS Response: _____		
MMC1:	Send an EG1 STOP command.	____	____
RMS1:	Indicates receipt of command?	____	____
LM1:	Press <F7> and record hex data MPS Command: _____ RMS Response: _____		
MMC1:	Send an EG1 START - ST ON LOAD BANK command.	____	____
RMS1:	Indicates receipt of command?	____	____
LM1:	Press <F7> and record hex data MPS Command: _____ RMS Response: _____		
MMC1:	Send an EG1 STOP command.	____	____
RMS1:	Indicates receipt of command?	____	____
LM1:	Press <F7> and record hex data MPS Command: _____ RMS Response: _____		

Comments/Notes:

TEST DATA SHEET

IT3.1 - Command Test

Date: _____ Time: _____ MPS Time: _____

Test Configuration Figure: 9-2

		YES	NO
RMS2 Command Test			
LM1:	Configure the LM1 Protocol Analyzer to monitor and capture data for RMS2.	____	____
MMC1:	Access the Site Configuration command list for RMS2.	____	____
MMC1:	Send an ALL STATUS command.	____	____
RMS2:	Returns SDRs for all LUs?	____	____
LM1:	Press <F7> and record hex data MPS Command: _____		
MMC1:	Send an ATCBI CH CHG A/M - MANUAL command.	____	____
RMS2:	Indicates receipt of command?	____	____
LM1:	Press <F7> and record hex data MPS Command: _____ RMS Response: _____		
MMC1:	Send an ATCBI CH SELECT - CH2 command.	____	____
RMS2:	Indicates receipt of command?	____	____
LM1:	Press <F7> and record hex data MPS Command: _____ RMS Response: _____		
MMC1:	Send an ATCBI CH SELECT - CH1 command.	____	____
RMS2:	Indicates receipt of command?	____	____
LM1:	Press <F7> and record hex data MPS Command: _____ RMS Response: _____		

Comments/Notes:

TEST DATA SHEET

IT3.1 - Command Test

Date: _____ Time: _____ MPS Time: _____

Test Configuration Figure: 9-2

		YES	NO
MMC1:	Send an ATCBI CH CHG A/M - AUTO command.	____	____
RMS2:	Indicates receipt of command?	____	____
LM1:	Press <F7> and record hex data		
	MPS Command: _____		
	RMS Response: _____		
MMC1:	Send a TRIG GEN SELECT - 1 command.	____	____
RMS2:	Indicates receipt of command?	____	____
LM1:	Press <F7> and record hex data		
	MPS Command: _____		
	RMS Response: _____		
MMC1:	Send a TRIG GEN SELECT - 2 command.	____	____
RMS2:	Indicates receipt of command?	____	____
LM1:	Press <F7> and record hex data		
	MPS Command: _____		
	RMS Response: _____		
MMC1:	Send a STBY HV VOLTAGE - ON command.	____	____
RMS2:	Indicates receipt of command?	____	____
LM1:	Press <F7> and record hex data		
	MPS Command: _____		
	RMS Response: _____		
MMC1:	Send a STBY HV VOLTAGE - OFF command.	____	____
RMS2:	Indicates receipt of command?	____	____
LM1:	Press <F7> and record hex data		
	MPS Command: _____		
	RMS Response: _____		

Comments/Notes:

TEST DATA SHEET

IT3.1 - Command Test

Date: _____ Time: _____ MPS Time: _____

Test Configuration Figure: 9-2

		YES	NO
MMC1:	Send a RECV CH CHG A/M - MANUAL command.	____	____
RMS2:	Indicates receipt of command?	____	____
LM1:	Press <F7> and record hex data		
	MPS Command: _____		
	RMS Response: _____		
MMC1:	Send a RECV CH CHG A/M - AUTO command.	____	____
RMS2:	Indicates receipt of command?	____	____
LM1:	Press <F7> and record hex data		
	MPS Command: _____		
	RMS Response: _____		
MMC1:	Send an ISM RESET - CH A command.	____	____
RMS2:	Indicates receipt of command?	____	____
LM1:	Press <F7> and record hex data		
	MPS Command: _____		
	RMS Response: _____		
MMC1:	Send an ISM RESET - CH B command.	____	____
RMS2:	Indicates receipt of command?	____	____
LM1:	Press <F7> and record hex data		
	MPS Command: _____		
	RMS Response: _____		
MMC1:	Send a CH1 PWR ADJ A/M - MANUAL command.	____	____
RMS2:	Indicates receipt of command?	____	____
LM1:	Press <F7> and record hex data		
	MPS Command: _____		
	RMS Response: _____		

Comments/Notes:

TEST DATA SHEET

IT3.1 - Command Test

Date: _____ Time: _____ MPS Time: _____

Test Configuration Figure: 9-2

		YES	NO
MMC1:	Send a CH1 PWR ADJ A/M - AUTO command.	____	____
RMS2:	Indicates receipt of command?	____	____
LM1:	Press <F7> and record hex data		
	MPS Command: _____		
	RMS Response: _____		
MMC1:	Send a CH2 PWR ADJ A/M - MANUAL command.	____	____
RMS2:	Indicates receipt of command?	____	____
LM1:	Press <F7> and record hex data		
	MPS Command: _____		
	RMS Response: _____		
MMC1:	Send a CH2 PWR ADJ A/M - AUTO command.	____	____
RMS2:	Indicates receipt of command?	____	____
LM1:	Press <F7> and record hex data		
	MPS Command: _____		
	RMS Response: _____		
MMC1:	Send an RMS RESET command.	____	____
RMS2:	Indicates receipt of command?	____	____
LM1:	Press <F7> and record hex data		
	MPS Command: _____		
	RMS Response: _____		
MMC1:	Send a STATUS command.	____	____
RMS2:	Returns a SDR for LU 20?	____	____
LM1:	Press <F7> and record hex data		
	MPS Command: _____		

Comments/Notes:

TEST DATA SHEET

IT3.1 - Command Test

Date: _____ Time: _____ MPS Time: _____

Test Configuration Figure: 9-2

		YES	NO
MMC1:	Access the Common Digitizer 1 Status command list for RMS2.	____	____
MMC1:	Send a STATUS command.	____	____
RMS2:	Returns a SDR for LU 28?	____	____
LM1:	Press <F7> and record hex data MPS Command: _____		
MMC1:	Send a CLEAR-RESET - AUTO command.	____	____
RMS2:	Indicates receipt of command?	____	____
LM1:	Press <F7> and record hex data MPS Command: _____ RMS Response: _____		
MMC1:	Send a CLEAR-RESET - MANUAL command.	____	____
RMS2:	Indicates receipt of command?	____	____
LM1:	Press <F7> and record hex data MPS Command: _____ RMS Response: _____		
MMC1:	Send a MANUAL CLEAR command.	____	____
RMS2:	Indicates receipt of command?	____	____
LM1:	Press <F7> and record hex data MPS Command: _____ RMS Response: _____		
MMC1:	Send a MANUAL RESET command.	____	____
RMS2:	Indicates receipt of command?	____	____
LM1:	Press <F7> and record hex data MPS Command: _____ RMS Response: _____		

Comments/Notes:

TEST DATA SHEET

IT3.1 - Command Test

Date: _____ Time: _____ MPS Time: _____

Test Configuration Figure: 9-2

		YES	NO
MMC1:	Send a CLEAR CTR TO 0 command.	____	____
RMS2:	Indicates receipt of command?	____	____
LM1:	Press <F7> and record hex data		
	MPS Command: _____		
	RMS Response: _____		
MMC1:	Send a RESET CTR TO 0 command.	____	____
RMS2:	Indicates receipt of command?	____	____
LM1:	Press <F7> and record hex data		
	MPS Command: _____		
	RMS Response: _____		
MMC1:	Send a DATA CH. SELECT - ON - CH#1 command.	____	____
RMS2:	Indicates receipt of command?	____	____
LM1:	Press <F7> and record hex data		
	MPS Command: _____		
	RMS Response: _____		
MMC1:	Send a DATA CH. SELECT - OFF - CH#1 command.	____	____
RMS2:	Indicates receipt of command?	____	____
LM1:	Press <F7> and record hex data		
	MPS Command: _____		
	RMS Response: _____		
MMC1:	Send a DATA CH. SELECT - ON - CH#2 command.	____	____
RMS2:	Indicates receipt of command?	____	____
LM1:	Press <F7> and record hex data		
	MPS Command: _____		
	RMS Response: _____		

Comments/Notes:

TEST DATA SHEET

IT3.1 - Command Test

Date: _____ Time: _____ MPS Time: _____

Test Configuration Figure: 9-2

		YES	NO
MMC1:	Send a DATA CH. SELECT - OFF - CH#2 command.	____	____
RMS2:	Indicates receipt of command?	____	____
LM1:	Press <F7> and record hex data		
	MPS Command: _____		
	RMS Response: _____		
MMC1:	Send a DATA CH. SELECT - ON - CH#3 command.	____	____
RMS2:	Indicates receipt of command?	____	____
LM1:	Press <F7> and record hex data		
	MPS Command: _____		
	RMS Response: _____		
MMC1:	Send a DATA CH. SELECT - OFF - CH#3 command.	____	____
RMS2:	Indicates receipt of command?	____	____
LM1:	Press <F7> and record hex data		
	MPS Command: _____		
	RMS Response: _____		
MMC1:	Send a DATA CH. L/R - LOCAL command.	____	____
RMS2:	Indicates receipt of command?	____	____
LM1:	Press <F7> and record hex data		
	MPS Command: _____		
	RMS Response: _____		
MMC1:	Send a DATA CH. L/R - REMOTE command.	____	____
RMS2:	Indicates receipt of command?	____	____
LM1:	Press <F7> and record hex data		
	MPS Command: _____		
	RMS Response: _____		

Comments/Notes:

TEST DATA SHEET

IT3.1 - Command Test

Date: _____ Time: _____ MPS Time: _____

Test Configuration Figure: 9-2

		YES	NO
MMC1:	Send a AC PWR - ON command.	____	____
RMS2:	Indicates receipt of command?	____	____
LM1:	Press <F7> and record hex data		
	MPS Command: _____		
	RMS Response: _____		
MMC1:	Send a AC PWR - OFF command.	____	____
RMS2:	Indicates receipt of command?	____	____
LM1:	Press <F7> and record hex data		
	MPS Command: _____		
	RMS Response: _____		
MMC1:	Access the Environmental Site Status command list for RMS2.	____	____
MMC1:	Send a STATUS command.	____	____
RMS2:	Returns a SDR for LU 22?	____	____
LM1:	Press <F7> and record hex data		
	MPS Command: _____		
MMC1:	Send an INTRU SYS CNTRL - DISABLE command.	____	____
RMS2:	Indicates receipt of command?	____	____
LM1:	Press <F7> and record hex data		
	MPS Command: _____		
	RMS Response: _____		
MMC1:	Send an INTRU SYS CNTRL - ENABLE command.	____	____
RMS2:	Indicates receipt of command?	____	____
LM1:	Press <F7> and record hex data		
	MPS Command: _____		
	RMS Response: _____		

Comments/Notes:

TEST DATA SHEET

IT3.1 - Command Test

Date: _____ Time: _____ MPS Time: _____

Test Configuration Figure: 9-2

		YES	NO
MMC1:	Send an EG1 START - ST ON EQUIP command.	____	____
RMS2:	Indicates receipt of command?	____	____
LM1:	Press <F7> and record hex data		
	MPS Command: _____		
	RMS Response: _____		
MMC1:	Send an EG1 START - ST ON LOAD BANK command.	____	____
RMS2:	Indicates receipt of command?	____	____
LM1:	Press <F7> and record hex data		
	MPS Command: _____		
	RMS Response: _____		
MMC1:	Send an EG1 STOP command.	____	____
RMS2:	Indicates receipt of command?	____	____
LM1:	Press <F7> and record hex data		
	MPS Command: _____		
	RMS Response: _____		

RMS3 Command Test

LM1:	Configure the LM1 Protocol Analyzer to monitor and capture data for RMS3.	____	____
MMC1:	Access the Site Configuration command list for RMS3.	____	____
MMC1:	Send an ALL STATUS command.	____	____
RMS3:	Returns SDRs for all LUs?	____	____
LM1:	Press <F7> and record hex data		
	MPS Command: _____		

Comments/Notes:

TEST DATA SHEET

IT3.1 - Command Test

Date: _____ Time: _____ MPS Time: _____

Test Configuration Figure: 9-2

		YES	NO
MMC1:	Send a CD2 AUTO/MAN - SELECT/DESELECT command.	____	____
RMS3:	Indicates receipt of command?	____	____
LM1:	Press <F7> and record hex data		
	MPS Command: _____		
	RMS Response: _____		
MMC1:	Send a CD2 CH SELECT - CH A command.	____	____
RMS3:	Indicates receipt of command?	____	____
LM1:	Press <F7> and record hex data		
	MPS Command: _____		
	RMS Response: _____		
MMC1:	Send a CD2 CH SELECT - CH B command.	____	____
RMS3:	Indicates receipt of command?	____	____
LM1:	Press <F7> and record hex data		
	MPS Command: _____		
	RMS Response: _____		
MMC1:	Send a CD2 AUTO/MAN - SELECT/DESELECT command.	____	____
RMS3:	Indicates receipt of command?	____	____
LM1:	Press <F7> and record hex data		
	MPS Command: _____		
	RMS Response: _____		
MMC1:	Send a CD2 CH AL RESET - CH A command.	____	____
RMS3:	Indicates receipt of command?	____	____
LM1:	Press <F7> and record hex data		
	MPS Command: _____		
	RMS Response: _____		

Comments/Notes:

TEST DATA SHEET

IT3.1 - Command Test

Date: _____ Time: _____ MPS Time: _____

Test Configuration Figure: 9-2

		YES	NO
MMC1:	Send a CD2 CH AL RESET - CH B command.	____	____
RMS3:	Indicates receipt of command?	____	____
LM1:	Press <F7> and record hex data		
	MPS Command: _____		
	RMS Response: _____		
MMC1:	Send a CD2 TOTAL RESET command.	____	____
RMS3:	Indicates receipt of command?	____	____
LM1:	Press <F7> and record hex data		
	MPS Command: _____		
	RMS Response: _____		
MMC1:	Access the ATCBI-5 Channel 1 Status command list for RMS3.	____	____
MMC1:	Send a CH1 STATUS command.	____	____
RMS3:	Returns a SDR for LU 24?	____	____
LM1:	Press <F7> and record hex data		
	MPS Command: _____		
MMC1:	Send an ATCBI CH SELECT - CH2 command.	____	____
RMS3:	Indicates receipt of command?	____	____
LM1:	Press <F7> and record hex data		
	MPS Command: _____		
	RMS Response: _____		
MMC1:	Send an ATCBI CH SELECT - CH1 command.	____	____
RMS3:	Indicates receipt of command?	____	____
LM1:	Press <F7> and record hex data		
	MPS Command: _____		
	RMS Response: _____		

Comments/Notes:

TEST DATA SHEET

IT3.1 - Command Test

Date: _____ Time: _____ MPS Time: _____

Test Configuration Figure: 9-2

		YES	NO
MMC1:	Send a TRIG GEN SELECT - 1 command.	____	____
RMS3:	Indicates receipt of command?	____	____
LM1:	Press <F7> and record hex data		
	MPS Command: _____		
	RMS Response: _____		
MMC1:	Send a TRIG GEN SELECT - 2 command.	____	____
RMS3:	Indicates receipt of command?	____	____
LM1:	Press <F7> and record hex data		
	MPS Command: _____		
	RMS Response: _____		
MMC1:	Send a STBY HV VOLTAGE - ON command.	____	____
RMS3:	Indicates receipt of command?	____	____
LM1:	Press <F7> and record hex data		
	MPS Command: _____		
	RMS Response: _____		
MMC1:	Send a STBY HV VOLTAGE - OFF command.	____	____
RMS3:	Indicates receipt of command?	____	____
LM1:	Press <F7> and record hex data		
	MPS Command: _____		
	RMS Response: _____		
MMC1:	Send an ATCBI CH CHG A/M - MANUAL command.	____	____
RMS3:	Indicates receipt of command?	____	____
LM1:	Press <F7> and record hex data		
	MPS Command: _____		
	RMS Response: _____		

Comments/Notes:

TEST DATA SHEET

IT3.1 - Command Test

Date: _____ Time: _____ MPS Time: _____

Test Configuration Figure: 9-2

		YES	NO
MMC1:	Send a RECV CH CHG A/M - MANUAL command.	____	____
RMS3:	Indicates receipt of command?	____	____
LM1:	Press <F7> and record hex data		
	MPS Command: _____		
	RMS Response: _____		
MMC1:	Send an ATCBI CH SELECT - CH2 command.	____	____
RMS3:	Indicates receipt of command?	____	____
LM1:	Press <F7> and record hex data		
	MPS Command: _____		
	RMS Response: _____		
MMC1:	Send an ATCBI CH SELECT - CH1 command.	____	____
RMS3:	Indicates receipt of command?	____	____
LM1:	Press <F7> and record hex data		
	MPS Command: _____		
	RMS Response: _____		
MMC1:	Send an ATCBI CH CHG A/M - AUTO command.	____	____
RMS3:	Indicates receipt of command?	____	____
LM1:	Press <F7> and record hex data		
	MPS Command: _____		
	RMS Response: _____		
MMC1:	Send a RECV CH CHG A/M - AUTO command.	____	____
RMS3:	Indicates receipt of command?	____	____
LM1:	Press <F7> and record hex data		
	MPS Command: _____		
	RMS Response: _____		

Comments/Notes:

TEST DATA SHEET

IT3.1 - Command Test

Date: _____ Time: _____ MPS Time: _____

Test Configuration Figure: 9-2

		YES	NO
MMC1:	Send an ISM RESET - CH A command.	____	____
RMS3:	Indicates receipt of command?	____	____
LM1:	Press <F7> and record hex data		
	MPS Command: _____		
	RMS Response: _____		
MMC1:	Send an ISM RESET - CH B command.	____	____
RMS3:	Indicates receipt of command?	____	____
LM1:	Press <F7> and record hex data		
	MPS Command: _____		
	RMS Response: _____		
MMC1:	Send a CH1 PWR ADJ A/M - MANUAL command.	____	____
RMS3:	Indicates receipt of command?	____	____
LM1:	Press <F7> and record hex data		
	MPS Command: _____		
	RMS Response: _____		
MMC1:	Send a CH1 PR ADJ STEP - UP command.	____	____
RMS3:	Indicates receipt of command?	____	____
LM1:	Press <F7> and record hex data		
	MPS Command: _____		
	RMS Response: _____		
MMC1:	Send a CH1 PR ADJ STEP - DOWN command.	____	____
RMS3:	Indicates receipt of command?	____	____
LM1:	Press <F7> and record hex data		
	MPS Command: _____		
	RMS Response: _____		

Comments/Notes:

TEST DATA SHEET

IT3.1 - Command Test

Date: _____ Time: _____ MPS Time: _____

Test Configuration Figure: 9-2

		YES	NO
MMC1:	Send a CH1 PWR ADJ A/M - AUTO command.	____	____
RMS3:	Indicates receipt of command?	____	____
LM1:	Press <F7> and record hex data		
	MPS Command: _____		
	RMS Response: _____		
MMC1:	Access the ATCBI-5 Channel 2 Status command list for RMS3.	____	____
MMC1:	Send a CH2 STATUS command.	____	____
RMS3:	Returns a SDR for LU 25?	____	____
LM1:	Press <F7> and record hex data		
	MPS Command: _____		
MMC1:	Send a TRIG GEN SELECT - 1 command.	____	____
RMS3:	Indicates receipt of command?	____	____
LM1:	Press <F7> and record hex data		
	MPS Command: _____		
	RMS Response: _____		
MMC1:	Send a TRIG GEN SELECT - 2 command.	____	____
RMS3:	Indicates receipt of command?	____	____
LM1:	Press <F7> and record hex data		
	MPS Command: _____		
	RMS Response: _____		
MMC1:	Send a STBY HV VOLTAGE - ON command.	____	____
RMS3:	Indicates receipt of command?	____	____
LM1:	Press <F7> and record hex data		
	MPS Command: _____		
	RMS Response: _____		

Comments/Notes:

TEST DATA SHEET

IT3.1 - Command Test

Date: _____ Time: _____ MPS Time: _____

Test Configuration Figure: 9-2

		YES	NO
MMC1:	Send a STBY HV VOLTAGE - OFF command.	____	____
RMS3:	Indicates receipt of command?	____	____
LM1:	Press <F7> and record hex data		
	MPS Command: _____		
	RMS Response: _____		
MMC1:	Send an ATCBI CH CHG A/M - MANUAL command.	____	____
RMS3:	Indicates receipt of command?	____	____
LM1:	Press <F7> and record hex data		
	MPS Command: _____		
	RMS Response: _____		
MMC1:	Send an ATCBI CH CHG A/M - AUTO command.	____	____
RMS3:	Indicates receipt of command?	____	____
LM1:	Press <F7> and record hex data		
	MPS Command: _____		
	RMS Response: _____		
MMC1:	Send a RECV CH CHG A/M - MANUAL command.	____	____
RMS3:	Indicates receipt of command?	____	____
LM1:	Press <F7> and record hex data		
	MPS Command: _____		
	RMS Response: _____		
MMC1:	Send a RECV CH CHG A/M - AUTO command.	____	____
RMS3:	Indicates receipt of command?	____	____
LM1:	Press <F7> and record hex data		
	MPS Command: _____		
	RMS Response: _____		

Comments/Notes:

TEST DATA SHEET

IT3.1 - Command Test

Date: _____ Time: _____ MPS Time: _____

Test Configuration Figure: 9-2

		YES	NO
MMC1:	Send an ISM RESET - CH A command.	____	____
RMS3:	Indicates receipt of command?	____	____
LM1:	Press <F7> and record hex data		
	MPS Command: _____		
	RMS Response: _____		
MMC1:	Send an ISM RESET - CH B command.	____	____
RMS3:	Indicates receipt of command?	____	____
LM1:	Press <F7> and record hex data		
	MPS Command: _____		
	RMS Response: _____		
MMC1:	Send a CH2 PWR ADJ A/M - MANUAL command.	____	____
RMS3:	Indicates receipt of command?	____	____
LM1:	Press <F7> and record hex data		
	MPS Command: _____		
	RMS Response: _____		
MMC1:	Send a CH2 PR ADJ STEP - UP command.	____	____
RMS3:	Indicates receipt of command?	____	____
LM1:	Press <F7> and record hex data		
	MPS Command: _____		
	RMS Response: _____		
MMC1:	Send a CH2 PR ADJ STEP - DOWN command.	____	____
RMS3:	Indicates receipt of command?	____	____
LM1:	Press <F7> and record hex data		
	MPS Command: _____		
	RMS Response: _____		

Comments/Notes:

TEST DATA SHEET

IT3.1 - Command Test

Date: _____ Time: _____ MPS Time: _____

Test Configuration Figure: 9-2

		YES	NO
MMC1:	Send a CH2 PWR ADJ A/M - AUTO command.	____	____
RMS3:	Indicates receipt of command?	____	____
LM1:	Press <F7> and record hex data		
	MPS Command: _____		
	RMS Response: _____		
MMC1:	Access the Azimuth Data Unit Status command list for RMS3.	____	____
MMC1:	Send a STATUS command.	____	____
RMS3:	Returns a SDR for LU 29?	____	____
LM1:	Press <F7> and record hex data		
	MPS Command: _____		
MMC1:	Access the Engine Generator Status command list for RMS3.	____	____
MMC1:	Send a STATUS command.	____	____
RMS3:	Returns a SDR for LU 22?	____	____
LM1:	Press <F7> and record hex data		
	MPS Command: _____		
MMC1:	Send an EG1 START - ST ON EQUIP command.	____	____
RMS3:	Indicates receipt of command?	____	____
LM1:	Press <F7> and record hex data		
	MPS Command: _____		
	RMS Response: _____		
MMC1:	Send an EG1 STOP command.	____	____
RMS3:	Indicates receipt of command?	____	____
LM1:	Press <F7> and record hex data		
	MPS Command: _____		
	RMS Response: _____		

Comments/Notes:

TEST DATA SHEET

IT3.1 - Command Test

Date: _____ Time: _____ MPS Time: _____

Test Configuration Figure: 9-2

		YES	NO
MMC1:	Send an EG1 START - ST ON LOAD BANK command.	____	____
RMS3:	Indicates receipt of command?	____	____
LM1:	Press <F7> and record hex data		
	MPS Command: _____		
	RMS Response: _____		
MMC1:	Send an EG1 STOP command.	____	____
RMS3:	Indicates receipt of command?	____	____
LM1:	Press <F7> and record hex data		
	MPS Command: _____		
	RMS Response: _____		
MMC1:	Send an EG1 LOCKOUT RESET command.	____	____
RMS3:	Indicates receipt of command?	____	____
LM1:	Press <F7> and record hex data		
	MPS Command: _____		
	RMS Response: _____		

RMS4 Command Test

LM1:	Configure the LM1 Protocol Analyzer to monitor and capture data for RMS4.	____	____
MMC1:	Access the command list for RMS4.	____	____
MMC1:	Send a STATUS command.	____	____
RMS4:	Returns a SDR?	____	____
LM1:	Press <F7> and record hex data		
	MPS Command: _____		

Comments/Notes:

TEST DATA SHEET

IT3.1 - Command Test

Date: _____ Time: _____ MPS Time: _____

Test Configuration Figure: 9-2

		YES	NO
MMC1:	Send a CD ALM RESET command.	____	____
RMS4:	Indicates receipt of command?	____	____
LM1:	Press <F7> and record hex data		
	MPS Command: _____		
	RMS Response: _____		
MMC1:	Send a CD PWR RESET command.	____	____
RMS4:	Indicates receipt of command?	____	____
LM1:	Press <F7> and record hex data		
	MPS Command: _____		
	RMS Response: _____		
MMC1:	Send a CD MEM RESET command.	____	____
RMS4:	Indicates receipt of command?	____	____
LM1:	Press <F7> and record hex data		
	MPS Command: _____		
	RMS Response: _____		
MMC1:	Send an ARSR RESET command.	____	____
RMS4:	Indicates receipt of command?	____	____
LM1:	Press <F7> and record hex data		
	MPS Command: _____		
	RMS Response: _____		
MMC1:	Send an MTI SITE command.	____	____
RMS4:	Indicates receipt of command?	____	____
LM1:	Press <F7> and record hex data		
	MPS Command: _____		
	RMS Response: _____		

Comments/Notes:

TEST DATA SHEET

IT3.1 - Command Test

Date: _____ Time: _____ MPS Time: _____

Test Configuration Figure: 9-2

		YES	NO
MMC1:	Send an MTI 16 command.	____	____
RMS4:	Indicates receipt of command?	____	____
LM1:	Press <F7> and record hex data		
	MPS Command: _____		
	RMS Response: _____		
MMC1:	Send an MTI 32 command.	____	____
RMS4:	Indicates receipt of command?	____	____
LM1:	Press <F7> and record hex data		
	MPS Command: _____		
	RMS Response: _____		
MMC1:	Send an MTI 64 command.	____	____
RMS4:	Indicates receipt of command?	____	____
LM1:	Press <F7> and record hex data		
	MPS Command: _____		
	RMS Response: _____		
MMC1:	Send an MTI 96 command.	____	____
RMS4:	Indicates receipt of command?	____	____
LM1:	Press <F7> and record hex data		
	MPS Command: _____		
	RMS Response: _____		
MMC1:	Send an MTI 128 command.	____	____
RMS4:	Indicates receipt of command?	____	____
LM1:	Press <F7> and record hex data		
	MPS Command: _____		
	RMS Response: _____		

Comments/Notes:

TEST DATA SHEET

IT3.1 - Command Test

Date: _____ Time: _____ MPS Time: _____

Test Configuration Figure: 9-2

		YES	NO
MMC1:	Send an MTI 192 command.	____	____
RMS4:	Indicates receipt of command?	____	____
LM1:	Press <F7> and record hex data		
	MPS Command: _____		
	RMS Response: _____		
MMC1:	Send an ACE 0 command.	____	____
RMS4:	Indicates receipt of command?	____	____
LM1:	Press <F7> and record hex data		
	MPS Command: _____		
	RMS Response: _____		
MMC1:	Send an ACE 1 command.	____	____
RMS4:	Indicates receipt of command?	____	____
LM1:	Press <F7> and record hex data		
	MPS Command: _____		
	RMS Response: _____		
MMC1:	Send an ACE 2 command.	____	____
RMS4:	Indicates receipt of command?	____	____
LM1:	Press <F7> and record hex data		
	MPS Command: _____		
	RMS Response: _____		
MMC1:	Send an ACE 3 command.	____	____
RMS4:	Indicates receipt of command?	____	____
LM1:	Press <F7> and record hex data		
	MPS Command: _____		
	RMS Response: _____		

Comments/Notes:

TEST DATA SHEET

IT3.1 - Command Test

Date: _____ Time: _____ MPS Time: _____

Test Configuration Figure: 9-2

		YES	NO
MMC1:	Send a BCN CH1 command.	____	____
RMS4:	Indicates receipt of command?	____	____
LM1:	Press <F7> and record hex data		
	MPS Command: _____		
	RMS Response: _____		
MMC1:	Send a BCN CH2 command.	____	____
RMS4:	Indicates receipt of command?	____	____
LM1:	Press <F7> and record hex data		
	MPS Command: _____		
	RMS Response: _____		
MMC1:	Send a RADAR CH A command.	____	____
RMS4:	Indicates receipt of command?	____	____
LM1:	Press <F7> and record hex data		
	MPS Command: _____		
	RMS Response: _____		
MMC1:	Send a RADAR CH B command.	____	____
RMS4:	Indicates receipt of command?	____	____
LM1:	Press <F7> and record hex data		
	MPS Command: _____		
	RMS Response: _____		
MMC1:	Send a DATA CH1 command.	____	____
RMS4:	Indicates receipt of command?	____	____
LM1:	Press <F7> and record hex data		
	MPS Command: _____		
	RMS Response: _____		

Comments/Notes:

TEST DATA SHEET

IT3.1 - Command Test

Date: _____ Time: _____ MPS Time: _____

Test Configuration Figure: 9-2

		YES	NO
MMC1:	Send a DATA CH2 command.	____	____
RMS4:	Indicates receipt of command?	____	____
LM1:	Press <F7> and record hex data		
	MPS Command: _____		
	RMS Response: _____		
MMC1:	Send a DATA CH3 command.	____	____
RMS4:	Indicates receipt of command?	____	____
LM1:	Press <F7> and record hex data		
	MPS Command: _____		
	RMS Response: _____		
MMC1:	Send a BCN OFFSET command.	____	____
RMS4:	Indicates receipt of command?	____	____
LM1:	Press <F7> and record hex data		
	MPS Command: _____		
	RMS Response: _____		
MMC1:	Send an STC 1 command.	____	____
RMS4:	Indicates receipt of command?	____	____
LM1:	Press <F7> and record hex data		
	MPS Command: _____		
	RMS Response: _____		
MMC1:	Send an STC 2 command.	____	____
RMS4:	Indicates receipt of command?	____	____
LM1:	Press <F7> and record hex data		
	MPS Command: _____		
	RMS Response: _____		

Comments/Notes:

TEST DATA SHEET

IT3.1 - Command Test

Date: _____ Time: _____ MPS Time: _____

Test Configuration Figure: 9-2

		YES	NO
MMC1:	Send an ANT CP command.	____	____
RMS4:	Indicates receipt of command?	____	____
LM1:	Press <F7> and record hex data		
	MPS Command: _____		
	RMS Response: _____		
MMC1:	Send an ANT LP command.	____	____
RMS4:	Indicates receipt of command?	____	____
LM1:	Press <F7> and record hex data		
	MPS Command: _____		
	RMS Response: _____		
MMC1:	Send an SSR ALARM CLEAR command.	____	____
RMS4:	Indicates receipt of command?	____	____
LM1:	Press <F7> and record hex data		
	MPS Command: _____		
	RMS Response: _____		
MMC1:	Send a MAGGI ONLY command.	____	____
RMS4:	Indicates receipt of command?	____	____
LM1:	Press <F7> and record hex data		
	MPS Command: _____		
	RMS Response: _____		
MMC1:	Send an EG START command.	____	____
RMS4:	Indicates receipt of command?	____	____
LM1:	Press <F7> and record hex data		
	MPS Command: _____		
	RMS Response: _____		

Comments/Notes:

TEST DATA SHEET

IT3.1 - Command Test

Date: _____ Time: _____ MPS Time: _____

Test Configuration Figure: 9-2

		YES	NO
MMC1:	Send an EG STOP command.	____	____
RMS4:	Indicates receipt of command?	____	____
LM1:	Press <F7> and record hex data		
	MPS Command: _____		
	RMS Response: _____		
MMC1:	Send an RCU RESET command.	____	____
RMS4:	Indicates receipt of command?	____	____
LM1:	Press <F7> and record hex data		
	MPS Command: _____		
	RMS Response: _____		

Comments/Notes:

Test Completed Date:_____ Time:_____

TEST DATA SHEET

IT3.2 - Invalid Command Test

Date: _____ Time: _____ MPS Time: _____

Test Configuration Figure: 9-2

		YES	NO
MPS:	Configured as required?	____	____
MMC1:	Access the IMCS Constant Monitor screen.	____	____
RMS1:	Configure an ATCBI-5 CD-1 RMS simulator as RMS1. RMS1 Site ID: _____	____	____
RMS3:	Configure an ARSR Solid State CD-1 RCIU simulator as RMS3. RMS3 Site ID: _____	____	____
RMS1 Invalid Command Test			
LM1:	Configure the LM1 Protocol Analyzer to monitor RMS1.	____	____
MMC1:	Access the Site Configuration command list for RMS1.	____	____
MMC1:	Send an ALL STATUS command.	____	____
RMS1:	Returns Site Data Reports (SDRs) for all Logical Units (LUs)?	____	____
Invalid Parameter Test			
MMC1:	Access the Site Configuration command list for RMS1.	____	____

Comments/Notes:

TEST DATA SHEET

IT3.2 - Invalid Command Test

Date: _____ Time: _____ MPS Time: _____

Test Configuration Figure: 9-2

		YES	NO
MMC1:	Select RECV CH CHG A/M, enter 4 for the parameter selection, and send the command.	____	____
RMS1:	Indicates receipt of command?	____	____
SMMC:	Indicates a command error?	____	____
LM1:	Press <F7> and record hex data MPS Command: _____ RMS Response: _____		
MMC1:	Access the CD-1 Status command list for RMS1.	____	____
MMC1:	Select DATA CH. SELECT, enter 3 for the STATUS parameter, enter 5 for the CHANNEL parameter, and send the command.	____	____
RMS1:	Indicates receipt of command?	____	____
SMMC:	Indicates a command error?	____	____
LM1:	Press <F7> and record hex data MPS Command: _____ RMS Response: _____		
MMC1:	Without exiting the CD-1 Status command list, select DATA CH. L/R, enter 8 for the parameter selection, and send the command.	____	____
RMS1:	Indicates receipt of command?	____	____
SMMC:	Indicates a command error?	____	____
LM1:	Press <F7> and record hex data MPS Command: _____ RMS Response: _____		

Comments/Notes:

TEST DATA SHEET

IT3.2 - Invalid Command Test

Date: _____ Time: _____ MPS Time: _____

Test Configuration Figure: 9-2

		YES	NO
MMC1:	Without exiting the CD-1 Status command list, select MANUAL RESET, and send the command.	____	____
RMS1:	Indicates receipt of command?	____	____
SMMC:	Indicates a command error?	____	____
LM1:	Press <F7> and record hex data MPS Command: _____ RMS Response: _____		

Invalid Selection Test

MMC1:	Access the ATCBI-5 Certification Parameters Status screen. Insure that the status of ATCBI-5 CH CHG A/M is MANUAL. Note the on-line channel: _____.	____	____
MMC1:	Without exiting the ATCBI-5 Certification Parameters command list for RMS1, select ATCBI CH SELECT, enter the parameter to select the channel which is already on-line (1 or 2), and send the command.	____	____
RMS1:	Indicates receipt of command?	____	____
SMMC:	Indicates a command error?	____	____
LM1:	Press <F7> and record hex data MPS Command: _____ RMS Response: _____		

Comments/Notes:

TEST DATA SHEET

IT3.2 - Invalid Command Test

Date: _____ Time: _____ MPS Time: _____

Test Configuration Figure: 9-2

		YES	NO
MMC1:	Access the ATCBI-5 Certification Parameters Command list for RMS1. Select ATCBI CH CHG A/M, enter 1 for the parameter (AUTO), and send the command.	____	____
MMC1:	Without exiting the ATCBI-5 Certification Parameters command list for RMS1, select ATCBI CH. SELECT, enter the parameter to change the on-line channel (1 or 2), and send the command.	____	____
RMS1:	Indicates receipt of command?	____	____
SMMC:	Indicates a command error?	____	____
LM1:	Press <F7> and record hex data MPS Command: _____ RMS Response: _____		

Invalid L/R Control Test

MMC1:	Access the CD-1 Status command list for RMS1. Select DATA CH. L/R, enter 1 (LOCAL) for the parameter selection, and send the command.	____	____
MMC1:	Access the ATCBI-5 Certification Parameters command list for RMS1. Select ATCBI CH. SELECT, enter the parameter to change the on-line channel (1 or 2), and send the command.	____	____
RMS1:	Indicates receipt of command?	____	____
SMMC:	Indicates a command error?	____	____

Comments/Notes:

TEST DATA SHEET

IT3.2 - Invalid Command Test

Date: _____ Time: _____ MPS Time: _____

Test Configuration Figure: 9-2

		YES	NO
LM1:	Press <F7> and record hex data MPS Command: _____ RMS Response: _____		
RMS3 Invalid Command Test			
LM1:	Configure the LM1 Protocol Analyzer to monitor RMS3.	____	____
MMC1:	Access the command list for RMS3.	____	____
MMC1:	Send a STATUS command.	____	____
RMS3:	Returns a SDR?	____	____
Invalid Selection Test			
MMC1:	Access the ARSR RCIU Status screen. Note the on-line radar channel: _____.		
MMC1:	Access the ARSR RCIU command list for RMS3.	____	____
MMC1:	Select the on-line radar channel which is already on-line, and send the command.	____	____
SMMC:	Indicates a command error?	____	____
LM1:	Press <F7> and record hex data MPS Command: _____ RMS Response: _____		
MMC1:	Access the ARSR RCIU Status screen. Note the on-line beacon channel: _____.		

Comments/Notes:

TEST DATA SHEET

IT3.2 - Invalid Command Test

Date: _____ Time: _____ MPS Time: _____

Test Configuration Figure: 9-2

		YES	NO
MMC1:	Access the ARSR RCIU command list for RMS3.	____	____
MMC1:	Select the on-line beacon channel which is already on-line, and send the command.	____	____
SMMC:	Indicates a command error?	____	____
LM1:	Press <F7> and record hex data MPS Command: _____ RMS Response: _____		
MMC1:	Access the ARSR RCIU Status screen. Note the antenna polarization: _____.		
MMC1:	Access the ARSR RCIU command list for RMS3.	____	____
MMC1:	Select the antenna polarization which is already selected, and send the command.	____	____
SMMC:	Indicates a command error?	____	____
LM1:	Press <F7> and record hex data MPS Command: _____ RMS Response: _____		

Invalid L/R Control Test

RMS3:	Send the command to select RCIU LOCAL mode (AD).	____	____
MMC1:	Access the ARSR RCIU Status screen and insure that the status of the RCIU is LOCAL. Note the on-line radar channel: _____.	____	____

Comments/Notes:

TEST DATA SHEET

IT3.2 - Invalid Command Test

Date: _____ Time: _____ MPS Time: _____

Test Configuration Figure: 9-2

		YES	NO
MMC1:	Access the ARSR RCIU Status command list for RMS3. Send the command to change the on-line radar channel.	____	____
RMS3:	Indicates receipt of command?	____	____
SMMC:	Indicates a command error?	____	____
LM1:	Press <F7> and record hex data MPS Command: _____ RMS Response: _____		

Comments/Notes:

Test Completed Date:_____ Time:_____

TEST DATA SHEET

IT4 - Alarm Test

Date: _____ Time: _____ MPS Time: _____

Test Configuration Figure: 9-2

		YES	NO
MPS:	Configured as required?	____	____
MMC1:	Displays IMCS Constant Monitor screen?	____	____
SMMC:	Displays IMCS Constant Monitor screen?	____	____
PTR:	Destination printer (PTR) for screens is online?	____	____
RMS1:	Configure an ATCBI-5 CD-1 RMS simulator as RMS1. RMS1 Site ID: _____	____	____
RMS2:	Configure an ATCBI-5 CD-1 RMS simulator as RMS2. RMS2 Site ID: _____	____	____
RMS3:	Configure an ATCBI-5 CD-2 RMS simulator as RMS3. RMS3 Site ID: _____	____	____
RMS4:	Configure an ARSR Solid State CD-1 RCIU simulator as RMS4. RMS4 Site ID: _____	____	____

Alarm Acknowledgement Security Validation

RMS1:	Induce an alarm.	____	____
MMC1:	Displays the alarm?	____	____
MMC1:	Acknowledge the alarm with invalid security parameters.	____	____
MMC1:	Acknowledgement denied?	____	____
MMC1:	Unacknowledged alarm is still displayed?	____	____

Comments/Notes:

TEST DATA SHEET

IT4 - Alarm Test

Date: _____ Time: _____ MPS Time: _____

Test Configuration Figure: 9-2

		YES	NO
Single Alarm Acknowledgement - Constant Monitor Screen			
MMC1:	Acknowledge the alarm with valid security parameters.	____	____
MMC1:	Alarm acknowledged?	____	____
MMC1:	Alarm is no longer displayed on Constant Monitor screen?	____	____
MMC1:	Access the Active Alarms screen.	____	____
MMC1:	The acknowledged alarm is still displayed on the Active Alarm screen?	____	____
Multiple Alarm Acknowledgement - Constant Monitor Screen			
RMS2:	Induce multiple alarms.	____	____
MMC1:	The Constant Monitor screen displays the alarms?	____	____
MMC1:	Place an 'X' in front of each induced alarm.	____	____
MMC1:	Acknowledge the alarms with invalid security parameters.	____	____
MMC1:	Acknowledgement denied?	____	____
MMC1:	Unacknowledged alarms are still displayed?	____	____

Comments/Notes:

TEST DATA SHEET

IT4 - Alarm Test

Date: _____ Time: _____ MPS Time: _____

Test Configuration Figure: 9-2

		YES	NO
MMC1:	Place an 'X' in front of each induced alarm.	____	____
MMC1:	Acknowledge the alarms with valid security parameters.	____	____
MMC1:	Alarms acknowledged?	____	____
MMC1:	Alarms are no longer displayed on the Constant Monitor screen?	____	____
MMC1:	Access the Active Alarms screen.	____	____
MMC1:	The acknowledged alarms are still displayed on the Active Alarm screen.	____	____

Single Alarm Acknowledgement - Active Alarms Screen

RMS3:	Induce an alarm.	____	____
MMC1:	Access Active Alarms screen.	____	____
MMC1:	Displays alarm?	____	____
MMC1:	Acknowledge the alarm with invalid security parameters.	____	____
MMC1:	Acknowledgement denied?	____	____
MMC1:	Unacknowledged alarm is still displayed?	____	____
MMC1:	Acknowledge the alarm with valid security parameters.	____	____
MMC1:	Alarm acknowledged?	____	____
MMC1:	Acknowledged alarm is still displayed on Active Alarm screen?	____	____

Comments/Notes:

TEST DATA SHEET

IT4 - Alarm Test

Date: _____ Time: _____ MPS Time: _____

Test Configuration Figure: 9-2

		YES	NO
MMC1:	Access the Site Information screen.	____	____
MMC1:	Displays pertinent site information?	____	____
Multiple Alarm Acknowledgement - Active Alarms Screen			
RMS:	Induce multiple alarms at the selected site.	____	____
MMC1:	Active Alarms screen displays multiple alarms?	____	____
MMC1:	Place an 'X' in front of each induced alarm.	____	____
MMC1:	Acknowledge the alarms with invalid security parameters.	____	____
MMC1:	Acknowledgement denied?	____	____
MMC1:	Unacknowledged alarms are still displayed?	____	____
MMC1:	Acknowledge the alarms with valid security parameters.	____	____
MMC1:	Alarms acknowledged?	____	____
MMC1:	Acknowledged alarms are still displayed on the Active Alarm screen?	____	____
Single Alarm Acknowledgement - Site Status Screen			
RMS1:	Induce an alarm condition.	____	____
MMC1:	Access the proper RMS1 site status screen for the alarm just created.	____	____
MMC1:	Displays alarm?	____	____

Comments/Notes:

TEST DATA SHEET

IT4 - Alarm Test

Date: _____ Time: _____ MPS Time: _____

Test Configuration Figure: 9-2

		YES	NO
MMC1:	Acknowledge the alarm with invalid security parameters.	____	____
MMC1:	Acknowledgement denied?	____	____
MMC1:	Unacknowledged alarm is still displayed?	____	____
MMC1:	Acknowledge the alarm with valid security parameters.	____	____
MMC1:	Alarm acknowledged?	____	____
MMC1:	Acknowledged alarm is still displayed on Site Status screen?	____	____

Multiple Alarm Acknowledgement - Site Status Screen

MMC1:	Return to the Constant Monitor screen.	____	____
RMS2:	Induce multiple alarms.	____	____
MMC1:	Tab to an unacknowledged alarm for RMS2 to access the Site Status screen.	____	____
MMC1:	Displays Site Status screen with alarms?	____	____
MMC1:	Place an 'X' in front of each induced alarm.	____	____
MMC1:	Acknowledge the alarms with invalid security parameters.	____	____
MMC1:	Acknowledgement denied?	____	____
MMC1:	Unacknowledged alarms are still displayed?	____	____
MMC1:	Acknowledge the alarms with valid security parameters.	____	____
MMC1:	Alarms acknowledged?	____	____
MMC1:	Acknowledged alarms are still displayed on Site Status screen?	____	____

Comments/Notes:

TEST DATA SHEET

IT4 - Alarm Test

Date: _____ Time: _____ MPS Time: _____

Test Configuration Figure: 9-2

		YES	NO
Single Alarm Acknowledgement - Alarm List Screen			
RMS2:	Induce an alarm condition.	____	____
MMC1:	Access the Alarm List screen from the Site Status screen.	____	____
MMC1:	Displays Alarm List screen?	____	____
MMC1:	Displays alarm?	____	____
MMC1:	Acknowledge the alarm with invalid security parameters.	____	____
MMC1:	Acknowledgement denied?	____	____
MMC1:	Unacknowledged alarm is still displayed?	____	____
MMC1:	Acknowledge the alarm with valid security parameters.	____	____
MMC1:	Alarm acknowledged?	____	____
MMC1:	Acknowledged alarm is still displayed on the Alarm List screen?	____	____
MMC1:	Access the Site Information screen from the Alarm List screen.	____	____
MMC1:	Displays pertinent site information?	____	____
Multiple Alarm Acknowledgement - Alarm List Screen			
RMS2:	Induce multiple alarms.	____	____
MMC1:	Alarm List screen displays multiple alarms?	____	____
MMC1:	Place an 'X' in front of each induced alarm.	____	____
MMC1:	Acknowledge the alarms with invalid security parameters.	____	____
MMC1:	Acknowledgement denied?	____	____
MMC1:	Unacknowledged alarms are still displayed?	____	____

Comments/Notes:

TEST DATA SHEET

IT4 - Alarm Test

Date: _____ Time: _____ MPS Time: _____

Test Configuration Figure: 9-2

		YES	NO
MMC1:	Acknowledge the alarms with valid security parameters.	____	____
MMC1:	Alarms acknowledged?	____	____
MMC1:	Acknowledged alarms are still displayed on Alarm List screen?	____	____
Loss of Communication Alarm			
RMS3:	Disable the communication link to the MPS.	____	____
MMC1:	Access the Active Alarms screen.	____	____
MMC1:	Displays MPS/RMS Comm alarm?	____	____
MMC1:	Acknowledge the alarm with valid security parameters.	____	____
MMC1:	Alarm acknowledged?	____	____
MMC1:	Acknowledged alarm is still displayed on Active Alarms screen?	____	____
RMS3:	Restore the communication link to the MPS.	____	____
MMC1:	Access the Constant Monitor screen.	____	____
MMC1:	Displays the Constant Monitor screen?	____	____
MMC1:	MPS/RMS Comm alarm is no longer displayed?	____	____
ARSR Solid State CD-1 RCIU Alarms			
RMS4:	Induce a Radar Failure (A4).	____	____
SMMC:	Indicates a Radar alarm and that the RMS is performing a site recovery?	____	____

Comments/Notes:

TEST DATA SHEET

IT4 - Alarm Test

Date: _____ Time: _____ MPS Time: _____

Test Configuration Figure: 9-2

		YES	NO
SMMC:	Indicates that the Radar alarm returns to normal?	____	____
RMS4:	Induce a Beacon Alarm (A6).	____	____
SMMC:	Indicates a Beacon alarm and that the RMS is performing a site recovery?	____	____
SMMC:	Indicates that the Beacon alarm returns to normal?	____	____
RMS4:	Induce a site temperature alarm (A9).	____	____
SMMC:	Indicates a site temperature alarm?	____	____
RMS4:	Clear the site temperature alarm (A9).	____	____
SMMC:	Indicates the site temperature alarm returns to normal?	____	____
RMS4:	Induce a security alarm (B9).	____	____
SMMC:	Indicates a security alarm?	____	____
RMS4:	Clear the security alarm (B9).	____	____
SMMC:	Indicates the security alarm returns to normal?	____	____
RMS4:	Induce a fire alarm (AA).	____	____
SMMC:	Indicates a fire alarm?	____	____
RMS4:	Clear the fire alarm (AA).	____	____
SMMC:	Indicates the fire alarm returns to normal?	____	____

Comments/Notes:

TEST DATA SHEET

IT4 - Alarm Test

Date: _____ Time: _____ MPS Time: _____

Test Configuration Figure: 9-2

		YES	NO
RMS4:	Induce a CD output service alarm (AB).	____	____
SMMC:	Indicates a CD output service alarm?	____	____
RMS4:	Clear the CD output service alarm (0D).	____	____
SMMC:	Indicates the CD output service alarm returns to normal?	____	____
RMS4:	Induce a CD buffer overload alarm (BB).	____	____
SMMC:	Indicates a CD buffer overload alarm?	____	____
RMS4:	Clear the CD buffer overload alarm (0E).	____	____
SMMC:	Indicates the CD buffer overload alarm returns to normal?	____	____
RMS4:	Induce a scan inhibit alarm (AC).	____	____
SMMC:	Indicates a scan inhibit alarm?	____	____
RMS4:	Clear the scan inhibit alarm (0F).	____	____
SMMC:	Indicates the scan inhibit alarm returns to normal?	____	____
RMS4:	Induce a SSR alarm (AE).	____	____
SMMC:	Indicates a SSR alarm?	____	____
RMS4:	Clear the SSR alarm (BE).	____	____
SMMC:	Indicates the SSR alarm returns to normal?	____	____

Comments/Notes:

Test Completed Date:_____ Time:_____

TEST DATA SHEET

IT5.1 MMS Logging Subsystem Test

Date: _____ Time: _____ MPS Time: _____

Test Configuration Figure: 9-2

		YES	NO
MPS:	Configured as required?	____	____
RMS1:	Configured as required?	____	____
RMS2:	Configured as required?	____	____
RMS3:	Configured as required?	____	____
RMS4:	Configured as required?	____	____
MMC2:	Displays MMS main menu?	____	____
PTR:	Destination printer for screens is online?	____	____
MMC2:	Access the Logging Subsystem menu.	____	____
MMC2:	The LOG Subsystem menu screen is displayed?	____	____

Administration/General (LAD) Test

MMC2:	Access the LAD function.		
MMC2:	Displays the LAD Screen?	____	____
MMC2:	Enter valid data in the following fields: FAC/SERV: MPS LOC IDENT: ACTA OPEN/START: (Current date/time) ACTION: O PASSWORD: (USER'S) COMMENTS: This is the first LAD test message.	____	____
MMC2:	Add the log entry.		
MMC2:	Log entry is added?	____	____
MMC2:	Record Log ID number. _____		
MMC2:	Access associated comments screen and verify comments entered above.		
MMC2:	Return to the LOG menu screen.	____	____
MMC2:	Access the LAD function.	____	____
MMC2:	Enter the Log ID number and retrieve the log entry.	____	____

Comments/Notes:

TEST DATA SHEET

IT5.1 MMS Logging Subsystem Test

Date: _____ Time: _____ MPS Time: _____

Test Configuration Figure: 9-2

		YES	NO
MMC2:	Enter valid data into the following fields: PASSWORD: (USER's) EQUIPMENT IDENT: 1 TC: 9 ACTION: X MAC: 4 ENTRY/CLOSE: (Current date/time) COMMENTS: This is the second LAD test message.	____	____
MMC2:	Close the log entry.	____	____
MMC2:	Log entry is closed?	____	____
MMC2:	Enter Log ID and retrieve the log entry.	____	____
MMC2:	Enter valid data in the following fields: PASSWORD: (USER's) COMMENTS: This is the final LAD entry. This record is now void.	____	____
MMC2:	Void the log entry.	____	____
MMC2:	Log entry is voided?	____	____
Acknowledge Alarms (LRM) Test			
RMS1:	Generate several alarm messages.	____	____
RMS2:	Generate several alarm messages.	____	____
RMS3:	Generate several alarm messages.	____	____
RMS4:	Generate several alarm messages.	____	____
MMC2:	Access the LRM function.		
MMC2:	Displays the LRM log entry screen?	____	____

Comments/Notes:

TEST DATA SHEET

IT5.1 MMS Logging Subsystem Test

Date: _____ Time: _____ MPS Time: _____

Test Configuration Figure: 9-2

		YES	NO
MMC2:	Access the Remote Alarms screen. Select an alarm to be acknowledged and a log entry created.	____	____
MMC2:	Return to the LRM log entry screen. Enter valid data in the following fields: ACTION: Q PASSWORD: (USER'S) COMMENTS: (Date and time of alarm)	____	____
MMC2:	Add the log entry.		
MMC2:	Log entry is added?	____	____
MMC2:	Record Log ID number. _____		
MMC2:	Access the LRM function.	____	____
MMC2:	Alarm is acknowledged?	____	____

Comments/Notes:

Test Completed Date: _____ Time: _____

TEST DATA SHEET

IT5.2 MMS PM/Certification Subsystem Test

Date: _____ Time: _____ MPS Time: _____

Test Configuration Figure: 9-2

		YES	NO
MPS:	Configured as required?	____	____
MMC2:	Displays MMS main menu?	____	____
PTR:	Destination printer (PTR) for screens is on?	____	____
MMC2:	Access the PM/Cert Scheduling Subsystem menu.	____	____
MMC2:	The PMS Subsystem menu screen is displayed?	____	____
PM/CERT Task Glossary (PMT) Test			
MMC2:	Access the PMT function.	____	____
MMC2:	Displays the PMT Update Screen?	____	____
MMC2:	Enter valid data in the following fields:		
	Task Glossary Ref:		
	Int:		
	Description: This is a PMT update test.	____	____
MMC2:	Add the PMT record.		
MMC2:	PMT record is added?	____	____
MMC2:	Return to the PMS Subsystem menu screen.	____	____
MMC2:	Access the PMT function.	____	____
MMC2:	Retrieve the PMT record added above.	____	____
MMC2:	Enter valid data in the following fields:		
	Description: This is a PMT modification.	____	____
MMC2:	Modify the PMT record.	____	____
MMC2:	Return to the PMS Subsystem menu screen.	____	____

Comments/Notes:

TEST DATA SHEET

IT5.2 MMS PM/Certification Subsystem Test

Date: _____ Time: _____ MPS Time: _____

Test Configuration Figure: 9-2

		YES	NO
MMC2:	Access the PMT function.	____	____
MMC2:	Retrieve the PMT record modified above.	____	____
MMC2:	Delete the PMT record.	____	____
MMC2:	Exit the PMS Subsystem.	____	____

Comments/Notes:

Test Completed Date: _____ Time: _____

TEST DATA SHEET

IT5.3 MMS Report Subsystem Test

Date: _____ Time: _____ MPS Time: _____

Test Configuration Figure: 9-2

		YES	NO
MPS:	Configured as required?	____	____
MMC2:	Displays MMS main menu?	____	____
LP:	Destination printer (PTR) for reports is on?	____	____

Report Generation (REP) Test

MMC2:	Access the Report Generation Subsystem (REP).	____	____
MMC2:	The Report Generation screen is displayed?	____	____
MMC2:	Enter valid data in the following fields: Report Name: LOGALL Start Date: REGION: EA Sector: 240	____	____
MMC2:	Access the Report Status screen.		
MMC2:	Displays Report Status screen?	____	____
MMC2:	Change the report destination to print the report on LP (LOC #ACTA).	____	____
LP:	Prints LOGALL report?	____	____

Comments/Notes:

Test Completed Date: _____ Time: _____

TEST DATA SHEET

IT6.1 Data Base Add Utility Test

Date: _____ Time: _____ MPS Time: _____

Test Configuration Figure: 9-2

		YES	NO
MMC2:	Displays MMS main menu?	____	____
MPS:	Configured as required?	____	____
MMC1:	Displays IMCS Constant Monitor screen?	____	____
PTR:	Destination printer (PTR) for screens is on?	____	____
MMS Facility/Service File Update			
MMC2:	Access the Facility/Service Update function.		
MMC2:	The Facility/Service Update screen is displayed?	____	____
MMC2:	Insert the necessary site specific information into the Facility/Service Update screen to add an ATCBI-5 CD-2 site.	____	____
MMC2:	Exit the Facility/Service Update function.		
MMC2:	The MMS main menu is displayed?	____	____
MMS Facility Authorization			
MMC2:	Access the Facility Authorization function.		
MMC2:	The Facility Authorization screen is displayed?	____	____
MMC2:	Insert the necessary site specific information into the Facility Authorization screen to authorize the ATCBI-5 CD-2 site added above.	____	____

Comments/Notes:

TEST DATA SHEET

IT6.1 Data Base Add Utility Test

Date: _____ Time: _____ MPS Time: _____

Test Configuration Figure: 9-2

		YES	NO
MMC2:	Exit the Facility Authorization function.		
MMC2:	The MMS main menu is displayed?	____	____
Utility Subsystem Security Test			
MMC1:	Access the IMCS Utility Subsystem.		
MMC1:	The Utility Security Analysis screen is displayed?	____	____
MMC1:	Attempt to enter the Utility Subsystem using invalid Technician Initials and/or Password.		
MMC1:	IMCS rejects invalid entries by returning to the Utility Security Analysis screen?	____	____
MMC1:	Enter the Utility Subsystem using valid Technician Initials and Password.		
MMC1:	The Utility Menu is displayed?	____	____
Data Base Add Utility Test			
MMC1:	Access the Data Base Enable function.		
MMC1:	The Data Base Enable menu is displayed?	____	____
MMC1:	Access the DBADAP file.		
MMC1:	The DBADAP - Update file is displayed?	____	____

Comments/Notes:

TEST DATA SHEET

IT6.1 Data Base Add Utility Test

Date: _____ Time: _____ MPS Time: _____

Test Configuration Figure: 9-2

		YES	NO
MMC1:	Insert the necessary site specific information into the DBADAP file to monitor the ATCBI-5 CD-2 site.	____	____
MMC1:	Exit the DBADAP - Update screen.	____	____
MMC1:	The Data Base Enable menu is displayed?	____	____
MMC1:	Access the DBSITETB file.		
MMC1:	The DBSITETB - Update file is displayed?	____	____
MMC1:	Insert the necessary site specific information into the DBSITETB file for the ATCBI-5 CD-2 site.	____	____
MMC1:	Exit the DBSITETB - Update screen.	____	____
MMC1:	The Data Base Enable menu is displayed?	____	____
MMC1:	Access the DBSTINF file.		
MMC1:	The DBSTINF - Update file is displayed?	____	____
MMC1:	Insert the necessary site specific information into the DBSTINF file for the ATCBI-5 CD-2 site.	____	____
MMC1:	Exit the DBSTINF - Update screen.	____	____
MMC1:	The Data Base Enable menu is displayed?	____	____
MMC1:	Exit the Data Base Enable function.		
MMC1:	The Utility Menu is displayed?	____	____

Comments/Notes:

TEST DATA SHEET

IT6.1 Data Base Add Utility Test

Date: _____ Time: _____ MPS Time: _____

Test Configuration Figure: 9-2

		YES	NO
MMC1:	Access the Adapt Facilities function.		
MMC1:	The Adapt Facilities menu is displayed?	____	____
MMC1:	Select the DBCS Data Base File Add function.		
MMC1:	The DBCS Selected File screen is displayed?	____	____
MMC1:	Insert the edit file name (ECSBI5) and Location ID for the ATCBI-5 CD-2 site.	____	____
MMC1:	Exit the DBCS Selected File screen.		
MMC1:	The Adapt Facilities menu is displayed?	____	____
MMC1:	Select the DBCSTBL Data Base File Add function.		
MMC1:	The DBCSTBL Selected File screen is displayed?	____	____
MMC1:	Insert the edit file name (ECSTBI5) and Location ID for the ATCBI-5 CD-2 site.	____	____
MMC1:	Exit the DBCSTBL Selected File screen.		
MMC1:	The Adapt Facilities menu is displayed?	____	____
	NOTE: If an ATCBI-5 site already exists in the database, do not add DBCMD79, DBCMD79P, or DBMENU records.		
MMC1:	Select the DBCMD79 Data Base File Add function.		
MMC1:	The DBCMD79 Selected File screen is displayed?	____	____
MMC1:	Insert the edit file name (EC7BI5) and Location ID for the ATCBI-5 CD-2 site.	____	____
MMC1:	Exit the DBCMD79 Selected File screen.		
MMC1:	The Adapt Facilities menu is displayed?	____	____

Comments/Notes:

TEST DATA SHEET

IT6.1 Data Base Add Utility Test

Date: _____ Time: _____ MPS Time: _____

Test Configuration Figure: 9-2

		YES	NO
MMC1:	Select the DBCMD79P Data Base File Add function.		
MMC1:	The DBCMD79P Selected File screen is displayed?	____	____
MMC1:	Insert the edit file name (EC7PBI5) and Location ID for the ATCBI-5 CD-2 site.	____	____
MMC1:	Exit the DBCMD79P Selected File screen.		
MMC1:	The Adapt Facilities menu is displayed?	____	____
MMC1:	Exit the Adapt Facilities function.		
MMC1:	The Utility Menu is displayed?	____	____
MMC1:	Select the DBMENU Data Base File Add function.		
MMC1:	The DBMENU Selected File screen is displayed?	____	____
MMC1:	Insert the edit file name (EMUBI5) and Location ID for the ATCBI-5 CD-2 site.	____	____
MMC1:	Exit the DBMENU Selected File screen.		
MMC1:	The Adapt Facilities menu is displayed?	____	____
MMC1:	Exit the Adapt Facilities function.		
MMC1:	The Utility Menu is displayed?	____	____
MMC1:	Exit the Utility Subsystem.		
MMC1:	The IMCS Constant Monitor screen is displayed?	____	____
MMC1:	Exit IMCS and shut down the IMCS/MMS processes using OBEY PATHSHUT.	____	____

Comments/Notes:

TEST DATA SHEET

IT6.1 Data Base Add Utility Test

Date: _____ Time: _____ MPS Time: _____

Test Configuration Figure: 9-2

		YES	NO
MMC1:	Restart the IMCS/MMS using OBEY PATHCOLD to save the configuration changes just made to the database files.	____	____
MMC1:	IMCS/MMS coldstarts with no errors, and the MMS Main Menu is displayed?	____	____
RMS2:	Connect an ATCBI-5 CD-2 RMS simulator to the port specified in the DBADAP file.	____	____
MMC1:	Access the IMCS Site Directory screen.		
MMC1:	The RMS2 site created above is displayed in the Site Directory?	____	____
MMC1:	Access the Site Information screen for the ATCBI-5 CD-2 site.		
MMC1:	The information shown on the Site Information screen is correct?	____	____
MMC1:	Exit to the Constant Monitor screen.		

Comments/Notes:

Test Completed Date:_____ Time:_____

TEST DATA SHEET

IT6.2 Data Base Delete Utility Test

Date: _____ Time: _____ MPS Time: _____

Test Configuration Figure: 9-2

		YES	NO
MMS:	Configured as required?	____	____
MMC2:	Displays MMS main menu?	____	____
MPS:	Configured as required?	____	____
MMC1:	Displays IMCS Constant Monitor screen?	____	____
PTR:	Destination printer (PTR) for screens is on?	____	____

Data Base Delete Utility Test

MMC1:	Access the Utility Subsystem using a valid Sector Code, Initials and Password.		
MMC1:	The Utility Menu is displayed?	____	____
MMC1:	Access the Adapt Facilities function.		
MMC1:	The Adapt Facilities menu is displayed?	____	____
MMC1:	Select the DBCS Data Base File Delete function.		
MMC1:	The DBCS Selected File screen is displayed?	____	____
MMC1:	Insert the proper Location ID and Site Type, and delete the DBCS records for that site.	____	____
MMC1:	Exit the DBCS Selected File screen.		
MMC1:	The Adapt Facilities menu is displayed?	____	____
MMC1:	Select the DBCSTBL Data Base File Delete function.		
MMC1:	The DBCSTBL Selected File screen is displayed?	____	____

Comments/Notes:

TEST DATA SHEET

IT6.2 Data Base Delete Utility Test

Date: _____ Time: _____ MPS Time: _____

Test Configuration Figure: 9-2

		YES	NO
MMC1:	Insert the proper Location ID and Site Type, and delete the DBCSTBL records for that site.	____	____
MMC1:	Exit the DBCSTBL Selected File screen.		
MMC1:	The Adapt Facilities menu is displayed?	____	____
MMC1:	Exit the Adapt Facilities function.		
MMC1:	The Utility Menu is displayed?	____	____
MMC1:	Access the Data Base Enable function.		
MMC1:	The Data Base Enable menu is displayed?	____	____
MMC1:	Access the DBADAP file.		
MMC1:	The DBADAP - Update file is displayed?	____	____
MMC1:	Retrieve the DBADAP record for the site to be deleted.		
MMC1:	The DBADAP - Update file for the site is displayed?	____	____
MMC1:	Delete the DBADAP record for this site.		
MMC1:	The DBADAP record is deleted?	____	____
MMC1:	Retrieve the DBSITETB record for the site to be deleted.		
MMC1:	The DBSITETB - Update file for the site is displayed?	____	____
MMC1:	Delete the DBSITETB record for this site.		
MMC1:	The DBSITETB record is deleted?	____	____

Comments/Notes:

TEST DATA SHEET

IT6.2 Data Base Delete Utility Test

Date: _____ Time: _____ MPS Time: _____

Test Configuration Figure:

		YES	NO
MMC1:	Retrieve the DBSTINF record for the site to be deleted.		
MMC1:	The DBSTINF - Update file for the site is displayed?	____	____
MMC1:	Delete the DBSTINF record for this site.		
MMC1:	The DBSTINF record is deleted?	____	____
MMC1:	Exit the Data Base Enable function.		
MMC1:	The Utility Menu is displayed?	____	____
MMC1:	Exit the Utility Subsystem.		
MMC1:	The IMCS Constant Monitor screen is displayed?	____	____
MMC1:	Exit IMCS and shut down the IMCS/MMS processes using OBEY PATHSHUT.		
MMC1:	Restart the IMCS/MMS processes using OBEY PATHCOLD to save the configuration changes just made to the database files.	____	____
MMC1:	IMCS/MMS processes start with no errors, and the MMS Main Menu is displayed?	____	____
MMC1:	Access the IMCS Site Directory screen.		
MMC1:	The site deleted above is not displayed in the Site Directory?	____	____
MMC1:	Exit the Site Directory.		
MMC1:	The IMCS Constant Monitor screen is displayed?	____	____

Comments/Notes:

Test Completed Date:_____ Time:_____

TEST DATA SHEET

IT6.3 Archive Utility Test

Date: _____ Time: _____ MPS Time: _____

Test Configuration Figure:

		YES	NO
MPS:	Configured as required?	____	____
MMC1:	Displays IMCS Constant Monitor screen?	____	____
PTR:	Destination printer (PTR) for screens is on?	____	____
LP:	Line Printer for archive reports is on?	____	____

Archive History (DBH) Utility Test

MMC1:	Access the Utility Subsystem.		
MMC1:	The Utility Security Analysis screen is displayed?	____	____
MMC1:	Enter the Utility Subsystem using valid Technician Initials and Password.		
MMC1:	The Utility Menu is displayed?	____	____
MMC1:	Access the Archive History (DBH) function.		
MMC1:	The Archive DBH screen is displayed?	____	____
MMC1:	The Archive Date displayed will be approximately 60 days prior to the current date. Leave the date as is.		
MMC1:	Enter the Report Destination as $_____ (LP) and press F1.		
LP:	Prints the archive report? Attach the archive report to the data sheets.	____	____
MMC1:	Return to the Utility Menu.		

Comments/Notes:

TEST DATA SHEET

IT6.3 Archive Utility Test

Date: _____ Time: _____ MPS Time: _____

Test Configuration Figure:

		YES	NO
Archive User History (DBUSERH) Utility Test			
MMC1:	Access the Archive User History (DBUSERH) function.		
MMC1:	The Archive DBUSERH screen is displayed?	____	____
MMC1:	The Archive Date displayed will be approximately 60 days prior to the current date. Leave the date as is.		
MMC1:	Enter the Report Destination as $_____ (LP) and press F1.		
LP:	Prints the archive report? Attach the archive report to the data sheets.	____	____
MMC1:	Exit IMCS to the TACL prompt.		
LP:	Examine the ARCHIVE Summary/Exception reports for the DBH and DBUSERH files. Correct any errors noted and re-initiate ARCHIVE process if necessary.	____	____
TAPE1:	Mount a magnetic tape to be used for archival data files.		
MMC1:	Send files to TAPE1 using OBEY ARCOBEYH and OBEY ARCOBEYU.	____	____

Comments/Notes:

Test Completed Date:_____ Time:_____

TEST DATA SHEET

IT7 - Report Generation Test

Date: _____ Time: _____ MPS Time: _____

Test Configuration Figure: 9-2

		YES	NO
MPS:	Configured as required?	____	____
MMC1:	Displays IMCS Constant Monitor screen?	____	____
PTR:	Destination printer (PTR) for screens is online?	____	____
RMS1:	Configure an ATCBI-5 CD-1 RMS simulator as RMS1. RMS1 Site ID: _____	____	____

Current Status Report Generation Test

MMC1:	Access the Report function.	____	____
MMC1:	The Report Menu is displayed?	____	____
MMC1:	Access the Current Status function.	____	____
MMC1:	The Current Status Report screen is displayed?	____	____
MMC1:	Enter the Site ID and Type for RMS1.	____	____
MMC1:	Enter " 0000 " as the Starting LUID.	____	____
MMC1:	Enter " LAST " as the Ending LUID.	____	____
MMC1:	Enter " $S.#DEFAULT " as the Report Destination.	____	____
MMC1:	Enter valid Technician Initials.	____	____
MMC1:	Press <F1> to generate the report.	____	____
MMC1:	Displays " REPORT INITIATED " at the bottom of the screen?	____	____
PTR:	Prints the Current Status report for the RMS1?	____	____

Comments/Notes:

TEST DATA SHEET

IT7 - Report Generation Test

Date: _____ Time: _____ MPS Time: _____

Test Configuration Figure: 9-2

		YES	NO
MMC1:	Exit the Current Status function.	____	____
MMC1:	The Report Menu is displayed?	____	____
MMC1:	Exit the Report function.	____	____
MMC1:	The IMCS Constant Monitor screen is displayed?	____	____

History Report Generation Test

MMC1:	Access the Report function.	____	____
MMC1:	The Report Menu is displayed?	____	____
MMC1:	Access the History function.	____	____
MMC1:	The History Report screen is displayed?	____	____
MMC1:	Enter the Site Ident and Type for RMS1.	____	____
MMC1:	Enter today's date as the File Start Date.	____	____
MMC1:	Enter " 0000 " as the Starting Point Number.	____	____
MMC1:	Enter " LAST " as the Ending Point Number.	____	____
MMC1:	Enter today's date and " 00 : 00 " as the Start Date - Time.	____	____
MMC1:	Enter today's date and " 23 : 59 " as the Stop Date - Time.	____	____
MMC1:	Enter " $S.#DEFAULT " as the Report Destination.	____	____
MMC1:	Enter valid Technician Initials.	____	____

Comments/Notes:

TEST DATA SHEET

IT7 - Report Generation Test

Date: _____ Time: _____ MPS Time: _____

Test Configuration Figure: 9-2

		YES	NO
MMC1:	Press <F1> to generate the report.	____	____
MMC1:	Displays " REPORT INITIATED " at the bottom of the screen?	____	____
PTR:	Prints the History report for the RMS1?	____	____
MMC1:	Exit the History function.	____	____
MMC1:	The Report Menu is displayed?	____	____
MMC1:	Exit the Report function.	____	____
MMC1:	The IMCS Constant Monitor screen is displayed?	____	____
User History Report Generation Test			
MMC1:	Access the Report function.	____	____
MMC1:	The Report Menu is displayed?	____	____
MMC1:	Access the User History function.	____	____
MMC1:	The User History Report screen is displayed?	____	____
MMC1:	Enter the Site Ident and Type for RMS1.	____	____
MMC1:	Enter today's date as the File Start Date.	____	____
MMC1:	Enter today's date and " 00 : 00 " as the Start Date - Time.	____	____
MMC1:	Enter today's date and " 23 : 59 " as the Stop Date - Time.	____	____
MMC1:	Enter " $S.#DEFAULT " as the Report Destination.	____	____
MMC1:	Enter valid Technician Initials.	____	____

Comments/Notes:

TEST DATA SHEET

IT7 - Report Generation Test

Date: _____ Time: _____ MPS Time: _____

Test Configuration Figure: 9-2

		YES	NO
MMC1:	Press <F1> to generate the report.	____	____
MMC1:	Displays " REPORT INITIATED " at the bottom of the screen?	____	____
PTR:	Prints the User History report for the RMS1?	____	____
MMC1:	Exit the User History function.	____	____
MMC1:	The Report Menu is displayed?	____	____
MMC1:	Exit the Report function.	____	____
MMC1:	The IMCS Constant Monitor screen is displayed?	____	____

Comments/Notes:

Test Completed Date:_____ Time:_____