TN
90
45
1

FAA WJH Technical Center
00093279

Flight Service Automation System (FSAS) Model 1 Full Capacity (M1FC) Operational Test and Evaluation (OT&E)/ Integration Test Report

Frances Mackuse
William Benner

MAY 14 Rec'd
TECHNICAL CENTER LIBRARY
ATLANTIC CITY, N.J. 08405

April 1991

DOT/FAA/CT-TN90/45

Document is on file at the Technical Center Library, Atlantic City International Airport, N.J. 08405

U.S. Department of Transportation
Federal Aviation Administration

Technical Center
Atlantic City International Airport, N.J. 08405

technical note technical note

NOTICE

This document is disseminated under the sponsorship of the U.S. Department of Transportation in the interest of information exchange. The United States Government assumes no liability for the contents or use thereof.

The United States Government does not endorse products or manufacturers. Trade or manufacturers' names appear herein solely because they are considered essential to the objective of this report.

Technical Report Documentotion Page

1. Report No.	2. Government Accession No.	3. Recipient's Catalog No.
DOT/FAA/CT-TN90/45		

4. Title and Subtitle	5. Report Date
FLIGHT SERVICE AUTOMATION SYSTEM (FSAS) MODEL 1 FULL CAPACITY (M1FC) OPERATIONAL TEST AND EVALUATION (OT&E)/INTEGRATION TEST REPORT	April 1991
	6. Performing Organization Code
7. Author(s) Frances Mackuse, William Benner Robert F. Havel (UAL)	8. Performing Organization Report No. DOT/FAA/CT-TN90/45
9. Performing Organization Name and Address Federal Aviation Administration Technical Center Atlantic City International Airport, New Jersey 08405	10. Work Unit No. (TRAIS)
	11. Contract or Grant No.
12. Sponsoring Agency Name and Address U.S. Department of Transportation Federal Aviation Administration Technical Center Atlantic City International Airport, New Jersey 08405	13. Type of Report and Period Covered Technical Note
	14. Sponsoring Agency Code

15. Supplementary Notes

16. Abstract

The Operational Test and Evaluation (OT&E)/Integration test of the Flight Service Automation System (FSAS), Model 1 Full Capacity (M1FC) was conducted at the Federal Aviation Administration (FAA) Technical Center, July 23-27, 1991.

The FSAS M1FC consists of three subsystems: the Aviation Weather Processor (AWP), the Flight Service Data Processing System (FSDPS), and the Automated Flight Service Station (AFSS). The purpose of this testing was to verify NAS integration requirements of the subsystems and the operational effectiveness of the M1FC within the NAS environment.

The tests were conducted utilizing the M1FC subsystems and their external interfaces available in the M1FC test bed. Various data collected during testing included test results of functional, system level, and operational requirements. Upon analysis of these data, results indicated deficiencies of the M1FC in meeting OT&E/integration test requirements.

It was concluded that the M1FC system requires corrections and/or modifications to satisfactorily meet integration and operational requirements for effective performance in the NAS environment. Based on these conclusions, it was recommended the deficiencies be corrected and the M1FC system be successfully retested prior to deployment.

17. Key Words	18. Distribution Statement
Aviation Weather Processor (AWP) Flight Service Data Processing System (FSDPS) Automated Flight Service Station (AFSS) Model 1 Full Capacity (M1FC) National Airspace System (NAS)	Document is on file at the Technical Center Library, Atlantic City International Airport, NJ 08405

19. Security Classif. (of this report)	20. Security Classif. (of this page)	21. No. of Pages	22. Price
Unclassified	Unclassified	34	

Form DOT F 1700.7 (8-72) Reproduction of completed page authorized

TABLE OF CONTENTS

	Page
EXECUTIVE SUMMARY	v
1. INTRODUCTION	1
2. BACKGROUND	1
3. TEST CONFIGURATION	3
4. TEST OBJECTIVES	3
5. TEST DISCUSSION	3
6. TEST RESULTS	7
6.1 Test Conclusions	8
6.2 Recommendations	9
7. ABBREVIATIONS AND ACRONYMS	10

APPENDICES

A - M1FC Test Verification Requirements Traceability Matrix (TVRTM)

B - OT&E/Integration Test Program Technical Reports (PTR)

C - System Level Verification (SLV) Test "Critical" Program Technical Reports (PTR)

LIST OF ILLUSTRATIONS

Figure		Page
3-1	M1FC Test Configuration	4
4-1	M1FC Test Verification Categories	5

EXECUTIVE SUMMARY

This document is the final test report for The Flight Service Automation System (FSAS), Model 1 Full Capacity (M1FC) Operational Test and Evaluation (OT&E)/Integration Test. The OT&E/Integration Test was conducted by the Surveillance and Weather Systems Branch, ACN-230, July 23 through July 27, 1990, at the Federal Aviation Administration (FAA) Technical Center, Atlantic City International Airport, Atlantic City, New Jersey.

The FSAS M1FC is the second and final phase of the Flight Service Automation Program and completes the Flight Service Modernization Program. The first phase, Model 1, has been in operation since February 1986. The FSAS M1FC consists of three subsystems: the Aviation Weather Processor (AWP), the Flight Service Data Processing System (FSDPS), and the Automated Flight Service Station (AFSS).

The OT&E/Integration Test was conducted in accordance with the FSAS M1FC OT&E/Integration Test Plan and the FAA M1FC Master Test Plan (MTP). The OT&E/Integration testing verified the FSAS M1FC National Airspace System (NAS) requirements as identified in the NAS System Specification (NAS-SS-1000), and the operational effectiveness and suitability of the M1FC within the NAS environment.

This report addresses the integration testing of M1FC only and does not address the testing of FSAS end-state interface requirements. Project Compliance Plans have been written stating that FSAS end-state interface requirements are to be implemented as separate enhancements to the M1FC.

The M1FC test bed at the FAA Technical Center was utilized in conducting the OT&E/Integration test. Internal and external interfaces were tested using the M1FC OT&E/Integration Test Procedures. The M1FC did not successfully pass all the NAS requirements. It is recommended that certain deficiencies of the M1FC be corrected and retested successfully prior to deployment.

1. INTRODUCTION.

This final test report details the results of the National Airspace System (NAS) Operational Test and Evaluation (OT&E)/Integration Test of the Flight Service Automation System (FSAS) Model 1 Full Capacity (M1FC) system.

The M1FC OT&E/Integration Test was conducted by the Surveillance and Weather Systems Branch, ACN-230, July 23 through July 27, 1990, at the Federal Aviation Administration (FAA) Technical Center, Atlantic City International Airport, Atlantic City, New Jersey. The test was conducted utilizing the M1FC test bed at the FAA Technical Center interfaced with the Aviation Weather Processor (AWP) located at the National Aviation Weather Processing Facility (NAWPF) in Atlanta, Georgia.

The OT&E/Integration testing was conducted in accordance with the FSAS M1FC OT&E/Integration Test Plan and the FAA M1FC Master Test Plan (MTP). The OT&E/Integration Test Plan defines the scope of the M1FC testing and includes the NAS requirements as identified in the NAS system specification NAS-SS-1000.

This report addresses M1FC only and does not address FSAS end-state interface requirements. As stated in the FAA M1FC MTP, the M1FC is not designed to satisfy the end-state Area Computer Control Complex (ACCC), Weather Message Switching Center Replacement (WMSCR), NAS Data Interchange Network II/Local Control Network (NADIN 2/LCN), Traffic Management Processor (TMP) or Maintenance Processor Subsystem (MPS) interfaces. These end-state interface requirements are included in the NAS System Specification, and Project Compliance Plans have been written by the Flight Service Station (FSS) Branch, ANW-120, stating that these interfaces will be implemented as separate enhancements to M1FC.

2. BACKGROUND.

The FSAS is an element of the NAS modernization program. The FSAS M1FC system consists of the AWP subsystem, the Flight Service Data Processing System (FSDPS), and the Automated Flight Service Stations (AFSS).

The FSAS project is intended to provide FSS automation that will: (1) improve access to weather information and Notices to Airmen (NOTAM), (2) simplify flight plan filing, and (3) automate other FSS functions. The FSAS is being developed and implemented in two phases, Model 1 and M1FC. The Model 1 was commissioned in February 1986. The M1FC is the second and final phase of FSAS development and completes the Flight Service Modernization Program.

The major difference between the Model 1 system and the M1FC system is the addition of the AWPs. The weather processing and aeronautical processing, currently handled by the FSDPS in Model 1, are now handled by the AWP in M1FC. Each AWP is capable of receiving all elements of the national data base. However, in a normal M1FC configuration, each AWP assumes responsibility for only a part of the processing requirements of the national data base. This is known as the "load share" concept. In the operational "load share" configuration, the information that an AWP is not responsible for is discarded by that particular AWP. Each AWP is capable of assuming all processing functions in the event of a failure of the other AWP.

The final operational configuration of the M1FC will consist of two AWPs located within the NAWPFs in Atlanta, Georgia, and Salt Lake City, Utah, along with 21 FSDPSs, and 60 AFSSs. A third AWP will be located at the FAA Technical Center for development and testing.

The FAA Technical Center Surveillance and Weather Systems Branch, ACN-230, was tasked to support the FSS Program Office, ANW-120, throughout the M1FC Test and Evaluation (T&E) process. This included the monitoring of all formal testing activities and the conduct of the NAS OT&E/Integration Test of the M1FC system.

M1FC System Level Verification (SLV) testing was conducted at the FAA Technical Center by the Information Systems Branch, ATR-220, from June 11 through 29, 1990. ACN-230 monitored this test for verification of NAS OT&E/Integration requirements in accordance with the Test Verification Requirements Traceability Matrices (TVRTM) of the M1FC MTP and OT&E/Integration Test Plan.

During conduct of SLV testing, 153 Program Technical Reports (PTR) were filed. ATR-220 classified 58 as "critical." The classification of "critical" means these PTRs are to be resolved prior to system deployment.

Based on system instability and the numerous PTRs filed during SLV testing, ACN-230 could not successfully complete the verification of all NAS OT&E/Integration requirements. Additional time was requested from ANW-120 to conduct a separate OT&E/Integration test. The project schedule was revised and ACN-230 was allocated the week of July 23, 1990, to complete M1FC OT&E/ Integration testing.

From June 29 through July 22, 1990, prior to the start of integration testing, the following M1FC software development activities occurred:

a. The National Automation Flight Service Branch, ATR-430, with the M1FC support contractor, E-Systems, incorporated changes to the operational software relative to the resolution of the 58 "critical" PTRs open from SLV.

b. The M1FC data base was further developed and enhanced by ATR-430. This new data base tape, version #FS06282, was made available for the M1FC OT&E/Integration test bed and included the Atlanta AWP, the Chicago FSDPS, and the Kansas City FSDPS. This new data base implemented the following changes:

1. Radar Report (SD) corridor (route) reporting width had been changed from a 25-mile corridor to a 100-mile corridor width.

2. Military stopover flight plan processing had been disabled. (With this change, the M1FC now provides the same military stopover flight plan processing function as presently exists in Model 1.)

3. Request/reply processing was changed back to the original M1FC Design Qualification Test (DQT) factory status. (An AFSS specialist does not receive a "R" flag upon request for adapted weather data.)

3. TEST CONFIGURATION.

The M1FC OT&E/Integration test configuration utilized the AWP located in Atlanta, Georgia, and the M1FC test bed at the FAA Technical Center which consists of 1 AWP, 2 FSDPSs, and 3 AFSSs with a total of 27 terminals (figure 3-1). The external interfaces of the M1FC, WMSC, and NADIN 1A were also included in this test configuration. The Kansas City and Chicago M1FC FSDPSs were on-line and provided test support as needed.

4. TEST OBJECTIVES.

The test objectives, stated in the M1FC OT&E/Integration Test Plan, were based on the NAS-SS-1000 requirements identified in the M1FC TVRTMs.

To meet these objectives, the OT&E/Integration test was conducted utilizing the M1FC subsystems and their external interfaces available in the M1FC test bed. NAS requirements for the internal and external interfaces were categorized into six test verification categories. These verification categories are listed in figure 4-1.

The NAS requirements are listed in the TVRTM in appendix A.

5. TEST DISCUSSION.

The OT&E/Integration test team members consisted of ACN-230 personnel and seven FAA Model 1 field personnel. These field personnel were from the Model 1 FSDPSs and AFSSs and were previously involved in M1FC test activities.

Test team members were assigned by the test director to the following test positions:

a. Test Manager
b. Test Coordinators (2)
c. AWP Operator
d. FSDPS Operators (2)
e. AFSS Operators (4)

Daily pretest meetings were chaired by the test director. Test schedules and detailed test procedures were assigned to the test team members. The test team members were assigned operational positions (AWP, FSDPS, and AFSS) and executed these procedures using the M1FC test bed system. These procedures included test requirements for the following areas:

a. Service A functions between Weather Message Switching Center (WMSC) and AWP/FSDPS;

b. Service B functions between the AWP/FSDPS and NADIN 1A;

c. AFSS/FSDPS flight plan processing;

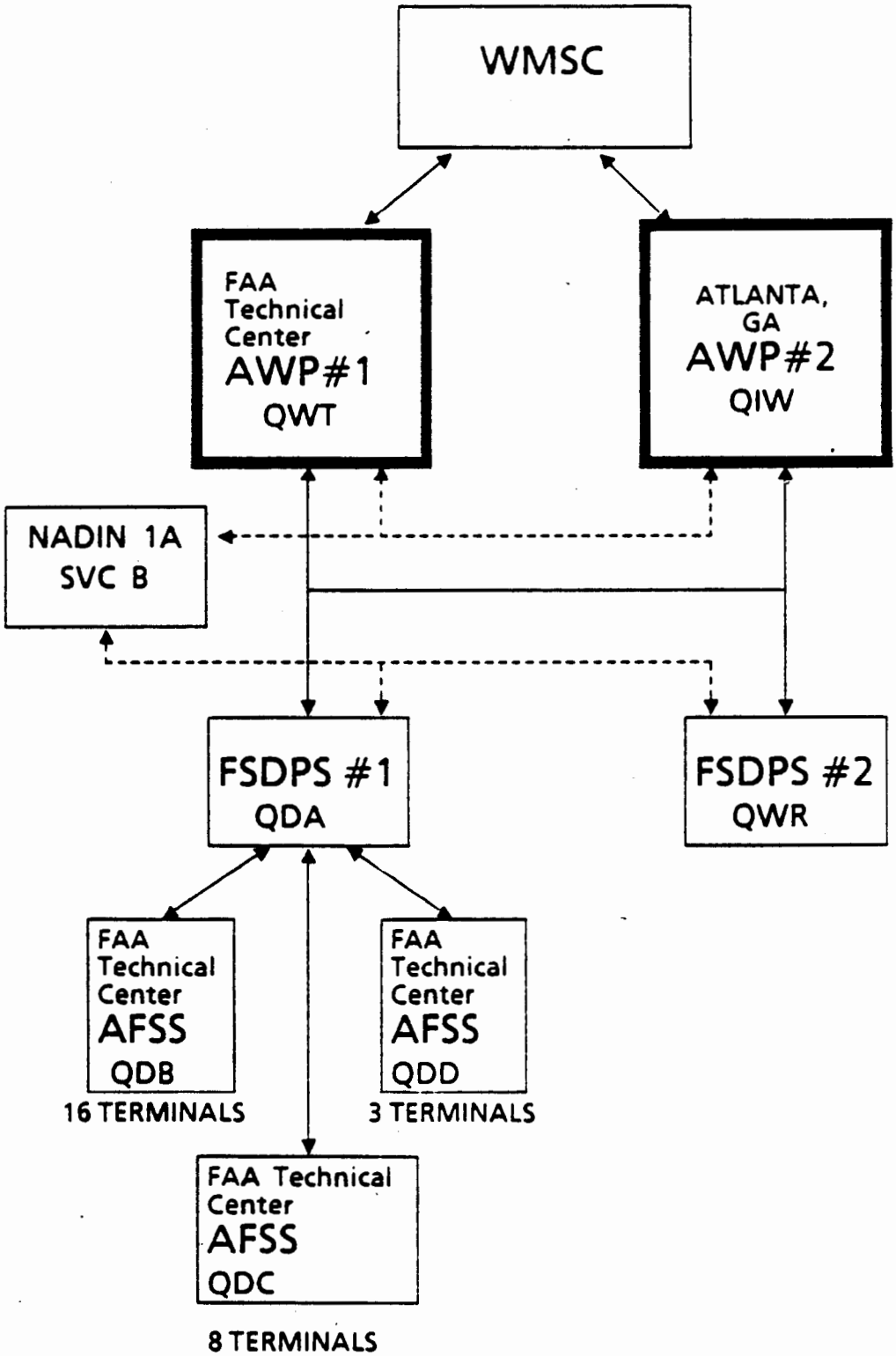

FIGURE 3-1. M1FC TEST CONFIGURATION

Internal Interfaces

A	B	C
AWP / AWP	AWP / FSDPS	FSDPS / AFSS

External Interfaces

D	E	F
AWP / WMSC	AWP / NADIN 1A	FSDPS / NADIN 1A

FIGURE 4-1. M1FC TEST VERIFICATION CATEGORIES

d. AWP/FSDPS/AFSS weather data processing, retrieval, and dissemination of weather products;

e. AWP/FSDPS/AFSS system loading/response time;

f. AWP/FSDPS/AFSS failure resolution;

g. AWP/AWP load share processing.

As test procedures were completed and verified, they were traced back to the requirements listed in the TVRTM and classified as follows:

a. P - Pass
b. F - Fail
c. P/C- Pass with Comment

PTRs were initiated, as required, where requirements failed to meet the expected test results. These PTRs were then evaluated by the test director and the test manager to determine the level of criticality. All PTRs were then given to ATR-430 for resolution. A list of the PTRs filed during OT&E/Integration testing is contained in appendix B.

Areas of operational concern that were noted during SLV were included as part of OT&E/Integration testing. These areas are as follows:

a. "Critical" PTRs. (Fifty-eight critical PTRs were open as a result of SLV testing.) See appendix C;

b. Stability of the Service B lines to and between the AWP, FSDPS, and NADIN 1A;

c. Stability of the AWP/AWP network lines;

d. The AWP/FSDPS station circuit lines failing in pairs;

e. System handling of request/reply;

f. "C" list back up during an FSDPS failure;

g. The ability of the system to handle traffic under a system load condition (i.e., with a number of AFSS terminals in one FSDPS family performing routine processing on the system). The maximum number of AFSS terminals available for OT&E/Integration testing was 27. The system is designed to handle 150 AFSS terminals per FSDPS family.

6. TEST RESULTS.

The test results were analyzed and cross referenced to the TVRTM as listed in appendix A. The following is a summary of the test results from OT&E/Integration testing.

Three system aborts (dual process failures) occurred at the FSDPS. Two system trapouts (a single process failure) occurred; one at the FSDPS and one at the AWP.

Twenty-two PTRs were generated during OT&E/Integration testing. Nineteen remained open at the end of OT&E/Integration testing and were classified by ACN-230 as "critical". (See appendix B.)

Thirty-four of the 58 "critical" PTRs filed during SLV were retested. ACN-230 recommended that 17 of these PTRs be closed.

Incorrect weather retrievals occurred frequently including (1) incorrect Surface Observations (SAs), (2) insufficient SDs, and (3) missing/incorrect weather stations in route briefings.

Problems were experienced with the AWP/AWP network lines and the AWP/FSDPS station circuit lines. The AWP/AWP network lines were unstable and the AWP/FSDPS station circuit lines tended to fail in pairs.

Service B message looping problems occurred during testing. ATR-430 had determined that the Service B looping problem with NADIN 1A was a NADIN system problem and not an M1FC problem.

Service B also experienced intermittent line failures at the FSDPS and the AWP. The Service B line status would change at the FSDPS and AWP operator positions. The AWP and/or the FSDPS operator would then have to reset these lines. There was no reported error condition to the operators from the system software indicating that these failures had occurred.

AWP/WMSC handling of request/reply processing is slow. All AFSS specialists must submit requests through the AWP operator. Each request must be responded to on an individual basis by the AWP operator. The AWP operator forwards the request to WMSC. The response from WMSC is sent back via the AWP to the AFSS specialist. This operator intervention in processing requests at the AWP, coupled with a single Service A line to WMSC, causes a slow response time. This slow response time impacts the AFSS specialists and causes the workload at the AWP to increase.

During the testing, an FSDPS failed and was not removed from distribution at the AWP. This caused the "C" list to buildup and become unmanageable at the AWP. This "C" list buildup impacted AWP operations. There are no procedures at the AWP for handling the removal of an FSDPS from distribution.

On the last day of testing, a limited system load test using 27 AFSS terminals was attempted. Test procedures were selected to simulate system load processing including weather retrievals and flight plan processing. To further load the system, an FSDPS reconfiguration was attempted (i.e., an FSDPS operator attempted

to take an FSDPS CPU off-line). The FSDPS should automatically reconfigure processing to be handled by three Central Processor Units (CPUs). An FSDPS dual system failure (trapout) occurred during this attempt to reconfigure. Due to time constraints, the load test could not be rerun.

6.1 TEST CONCLUSIONS.

Based on the analysis of test data from Operational Test and Evaluation (OT&E)/Integration testing and System Level Verification (SLV), the following conclusions were reached:

a. The Model 1 Full Capacity (M1FC) does not process software error conditions without interruptions of service. This error processing of system trap-outs does not function correctly.

b. The system response times have increased due to the addition of the Aviation Weather Processor (AWP) and the operator intervention of previously automated functions.

c. The 19 Program Technical Reports (PTRs) written during OT&E/Integration testing that remain open as "critical" need to be resolved and retested successfully.

d. The 41 SLV PTRs that remain open as "critical" need to be resolved and retested successfully.

e. Requirements on the Test Verification Requirements Traceability Matrix (TVRTM) that are noted as "failed" or "passed with comment" need to be retested successfully. The majority of these requirements are included in the PTRs that were written during OT&E/Integration and SLV testing.

f. System communication line reliability consisting of the AWP/AWP network lines and the AWP/Flight Service Data Processing System (FSDPS) station circuit lines need to be investigated. The lack of system line diversity is a problem. Communication line reliability problems occurred throughout the testing and are an operational concern.

g. Service B line failures are a system software problem. Further testing is needed to determine an exact cause and correction for this problem.

h. Operational procedures and software as it presently exists is inadequate to handle:

1. "C"-list management at the AWP;

2. Request/reply processing at the AWP, and specialist request status response at the Automated Flight Service Station (AFSS).

i. FSDPS operational reconfiguration procedures are inadequate.

The majority of operational concerns of the M1FC are inherent in the system design of the AWPs. Functions that are causing problems, such as (1) the request/reply, (2) "C"-list backup, (3) slow response times to the AFSS, and (4) operator intervention to previously automated functions are all due to the addition of the AWPs.

With the inclusion of the AWPs, the FSDPSs become dependent on the AWPs. Weather data is routed through the AWPs to the FSDPS in support of the AFSSs. This is an additional routing of weather data, therefore, reliability of the AWPs is a primary concern.

6.2 RECOMMENDATIONS.

As a result of the Operational Test and Evaluation (OT&E)/Integration Test, ACN-230 recommends the following corrections/modifications be made to the Model 1 Full Capacity (M1FC) system prior to deployment:

a. Requirements on the Test Verification Requirements Traceability Matrix (TVRTM) that are noted as "failed" or "passed with comment" need to be retested successfully.

b. All the critical Program Technical Reports (PTRs) outstanding, from both OT&E/Integration and System Level Verification (SLV) testing, should be corrected and retested successfully.

c. A viable request/reply process for returning an "R" flag to the Automated Flight Service Station (AFSS) specialist for adapted weather data should be implemented into the system.

d. Aviation Weather Processor (AWP)/AWP network lines need to be stabilized. Continued outages of these lines will reduce system efficiency.

e. AWP/Flight Service Data Processing System (FSDPS) station circuit line failing in pairs needs to be further investigated and corrected.

f. Operational procedures need to be developed and software modifications need to be implemented for "C"-list management at the AWP.

g. FSDPS operational reconfiguration procedures need to be developed and tested.

h. A full system load test must be performed to determine the ability of the M1FC system to handle full system load processing.

7. ABBREVIATIONS AND ACRONYMS.

ACCC	Area Computer Control Complex
AFSS	Automated Flight Service Station
AWP	Aviation Weather Processor
CPU	Central Processor Unit
DQT	Design Qualification Test
FAA	Federal Aviation Administration
FSAS	Flight Service Automation System
FSDPS	Flight Service Data Processing System
FSS	Flight Service Station
LCN	Local Control Network
M1FC	Model 1 Full Capacity
MPS	Maintenance Processor Subsystem
MTP	Master Test Plan
NADIN 1/2	National Airspace Data Interchange Network
NAS	National Airspace System
NAWPF	National Aviation Weather Processing Facility
NOTAM	Notices to Airmen
OT&E	Operational Test and Evaluation
TR	Program Technical Report
SA	Surface Observation
SD	Radar Report (Weather)
SLV	System Level Verification
T&E	Test and Evaluation
TMP	Traffic Management Processor
TVRTM	Test Verification Requirements Traceability Matrix
WMSC	Weather Message Switching Center
WMSCR	Weather Message Switching Center Replacement

APPENDIX A

M1FC TEST VERIFICATION REQUIREMENTS TRACEABILITY MATRIX (TVRTM)

NAS SYSTEM SPECIFICATION NAS-SS-1000 VOLUME II		CROSS REFERENCE		REMARKS
PARA. NO.	REQUIREMENT DESCRIPTION	FAA-E-2683C	FAA-E-2685C	
3.2.1.3	Auto Flight Service Subelement	Title	Title	
3.2.1.3.1	Flight Service Data Processing System	Descript.	Descript.	
3.2.1.3.1.1	Functional Characteristics	Lead-In	Lead-In	
3.2.1.3.1.1.1	Failure Resolution	3.3.1.3.2	3.6.2	F
3.2.1.3.1.1.2	Data Acceptance		3.2.2	F
3.2.1.3.1.1.3	AFSSWS Support	3.6.1.1	3.2	F
3.2.1.3.1.1.4	Data Requests		3.2.2	F
3.2.1.3.1.1.5	Data Integrity		3.2.1.2.5	F
3.2.1.3.1.1.6	Data Processing		3.2.2	X
3.2.1.3.1.1.6.1	Flight Data Processing		3.4.3	X
3.2.1.3.1.1.6.1.1	Routing Determination		3.4.3.5.1.1	P
3.2.1.3.1.1.6.1.1.1	VFR Flight Data Routing	Lead-In	Lead-In	
3.2.1.3.1.1.6.1.1.1.a	Subsystem or Direct User Submitting the Data		3.4.9	P
3.2.1.3.1.1.6.1.1.1.b	FSDPS Associated with the Departure Point			P
3.2.1.3.1.1.6.1.1.1.c	(Reserved - Deleted by NCP11047)			
3.2.1.3.1.1.6.1.1.1.d	(Reserved - Deleted by NCP11047)			
3.2.1.3.1.1.6.1.1.1.e	(Reserved - Deleted by NCP11047)			
3.2.1.3.1.1.6.1.1.1.f	If Departur/Arrivl Arpt is on Adptble Arpt List	*	*	P
3.2.1.3.1.1.6.1.1.2	DVFR Flight Data Routing Determination	Lead-In	Lead-In	
3.2.1.3.1.1.6.1.1.2.a	Subsystem or Direct User Submitting the Data		3.4.9	P
3.2.1.3.1.1.6.1.1.2.b	FSDPS Associated with the Departure Point			P
3.2.1.3.1.1.6.1.1.2.c	(Reserved - Deleted by NCP 11047)			
3.2.1.3.1.1.6.1.1.2.d	(Reserved - Deleted by NCP 11047)			
3.2.1.3.1.1.6.1.1.2.e	(Reserved - Deleted by NCP 11047)			
3.2.1.3.1.1.6.1.1.2.f	(Reserved - Deleted by NCP 11047)			
3.2.1.3.1.1.6.1.1.2.g	If Departure/Arrival Arpt is on Adaptable Arpt List	*	*	P
3.2.1.3.1.1.6.1.1.3	IFR Flight Data Routing Determination	*	*	P
3.2.1.3.1.1.6.1.1.3.a	Subsystem Submitting the Data		3.4.9	P
3.2.1.3.1.1.6.1.1.3.b	(Reserved - Deleted by NCP 11047)			
3.2.1.3.1.1.6.1.2.	Flight Data Evaluation		3.4.3.5.1	P

Legend : P= PASS, F= FAILURE, P/C= PASS WITH COMMENT, X= NOT APPLICABLE

NAS SYSTEM SPECIFICATION NAS-SS-1000 VOLUME II		CROSS-REFERENCE		REMARKS
PARA. NO.	REQUIREMENT DESCRIPTION	FAA-E-2683C	FAA-E-2685C	
3.2.1.3.1.1.6.1.2.1	Validity Evaluation		3.4.3.5.1	P
3.2.1.3.1.1.6.1.2.2	Route Contiguity		3.4.2.5.1.1	P
3.2.1.3.1.1.6.1.2.3	Transmittal for Evaluation			
3.2.1.3.1.1.6.1.2.3.a	Proposed VFR/DVFR Flight Data		3.3.2.2	P/C
3.2.1.3.1.1.6.1.2.3.b	Proposed IFR Flight Data		3.3.2.2	P/C
3.2.1.3.1.1.6.1.2.3.c	Selected Proposed VFR Flight Data		3.3.2.2	P/C
3.2.1.3.1.1.6.1.3	Flight Data Reformatting	*	*	X
3.2.1.3.1.1.6.1.4	Multiple Flight Plans		3.4.3.1	P
3.2.1.3.1.1.6.1.4.a	Aircraft Identifier		3.4.3.1	P
3.2.1.3.1.1.6.1.4.b	Type of Aircraft/Special Equipment		3.4.3.1	P
3.2.1.3.1.1.6.1.4.c	Mode S Address		3.4.3.1	X
3.2.1.3.1.1.6.1.4.d	True Airspeed		3.4.3.1	P
3.2.1.3.1.1.6.1.4.e	Aircraft Home Base		3.4.3.1	P
3.2.1.3.1.1.6.1.4.f	Color of Aircraft		3.4.3.1	P
3.2.1.3.1.1.6.1.5	Error Correction		3.4.3.5.1	P
3.2.1.3.1.1.6.1.6	Search and Rescue (SAR) Data Removal		3.4.3	P
3.2.1.3.1.1.6.1.6.1	SAR Data Storage		3.3.2.2.1.c	P
3.2.1.3.1.1.6.1.6.2	SAR Data Transmission		3.4.3	P
3.2.1.3.1.1.6.2	Airport Lists		3.3.2.3	P
3.2.1.3.1.1.6.3	Weather Data Processing	Lead-In	Lead-In	
3.2.1.3.1.1.6.3.1	AWP Data Products		3.2.2	P/C
3.2.1.3.1.1.6.3.2	Real Time Weather Proc (RWP)/Meteorol Wx Proc (MWP)	*	*	X
3.2.1.3.1.1.6.3.3	(Reserved - Deleted by NCP10197)			
3.2.1.3.1.1.6.3.4	NOTAM Processing		3.2.1.2.2	P
3.2.1.3.1.1.6.3.4.1	Processed NOTAM Handling	Lead-In	Lead-In	
3.2.1.3.1.1.6.3.4.1.a	Maintain		3.2	P
3.2.1.3.1.1.6.3.4.1.b	Update		3.2	P
3.2.1.3.1.1.6.3.5	Military Operation/Special Use Airspace Processing	Lead-In	Lead-In	
3.2.1.3.1.1.6.3.5.a	Maint Info Re:Special Use Airspace Bounds., TIMES		3.3.2.2.1.b	X

Legend P= PASS, F= FAILURE, P/C PASS WITH COMMENT, X= NOT APPLICABLE

NAS SYSTEM SPECIFICATION NAS-SS-1000 VOLUME II		CROSS REFERENCE		REMARKS
PARA. NO	REQUIREMENT DESCRIPTION	FAA-E-2683C	FAA-E-2685C	
3.2.1.3.1.1.6.3.5.b	Update Info Re: Spcl Use Airsp. Bounds., TIMES		3.3.2.2.1.b	X
3.2.1.3.1.1.6.3.5.b.1	Update Info SUA Upon Bound Cng		3.3.2.2.1.b	X
3.2.1.3.1.1.6.3.5.b.2	Update Info SUA Deactiva.		3.3.2.2.1.b	X
3.2.1.3.1.1.6.3.6	(Reserved - Deleted by NCP10197)			
3.2.1.3.1.1.6.4	Search and Rescue Data Processing		3.3.2.2.1.c	P
3.2.1.3.1.1.6.4.1	SAR Report Generation		3.4.3	X
3.2.1.3.1.1.6.5	Law Enforcement Data Pro.		3.3.2.2.1.d	P
3.2.1.3.1.1.6.6	Traffic Management Data	*	*	X
3.2.1.3.1.1.6.7	(Reserved - Deleted by NCP11047)			
3.2.1.3.1.1.6.8	Direct User Access Processing System (DUATS)	*	*	X
3.2.1.3.1.1.6.9	MBO Terminal Processing	*	*	X
3.2.1.3.1.1.6.10	Gen Flight Service Msg	Lead-In	Lead-In	
3.2.1.3.1.1.6.10a	Preferred Route Information		3.3.2.3.4	P
3.2.1.3.1.1.6.10b	Administrative Messages		3.3.2.2	P/C
3.2.1.3.1.1.6.10c	General Information Messages		3.3.2.2	P/C
3.2.1.3.1.1.6.11	PIREP Handling		3.3.2.1.2.b	X
3.2.1.3.1.1.7	Flight Data Management		3.4.3	P/C
3.2.1.3.1.1.7.1	Flight Data Storage		3.4.3.3	P/C
3.2.1.3.1.1.7.1.1	Proposed Flight Plan Storage		3.4.3.3	P/C
3.2.1.3.1.1.7.1.2	Active Flight Plan Storage		3.4.3.4	P
3.2.1.3.1.1.7.2	Flight Data Distribution		3.4.3	P
3.2.1.3.1.1.7.2.1	ACCC Distribution	Title	Title	
3.2.1.3.1.1.7.2.1.1	Dep ACCC Distribution	Lead-In	Lead-In	
3.2.1.3.1.1.7.2.1.1.a	IFR Flight Data		3.4.3.5.1.1	X
3.2.1.3.1.1.7.2.1.1.b	VFR & DVFR Flight Data Affecting Departures	*	*	X
3.2.1.3.1.1.7.2.1.2	Destination ACCC Distribution	*	*	X
3.2.1.3.1.1.7.2.1.3	Intercept ACCC Distribution	*	*	X
3.2.1.3.1.1.7.2.2	FSDPS Distribution	Title	Title	
3.2.1.3.1.1.7.2.2.1	FSDPS Distribution		3.4.5.5	P

Legend : P= PASS, F= FAILURE, P/C= PASS WITH COMMENT, X= NOT APPLICABLE

NAS SYSTEM SPECIFICATION NAS-SS-1000 VOLUME II		CROSS REFERENCE		REMARKS
PARA. NO	REQUIREMENT DESCRIPTION	FAA-E-2683C	FAA-E-2685C	
3.2.1.3.1.1.7.2.2.1.1	Detection of Non-Acknowladgement		3.4.5.5	P
3.2.1.3.1.1.7.2.2.1.2	Retrans of Flight Data		3.4.5.5	P
3.2.1.3.1.1.7.2.2.1.3	Retransmittal Alert		3.4.5.5	P
3.2.1.3.1.1.7.2.2.2	Departure FSDPS Distribution	Lead-In	Lead-In	
3.2.1.3.1.1.7.2.2.2.a	VFR, DVFR Flight Data Relat. to Prop. Flight Plans	*	*	P
3.2.1.3.1.1.7.2.2.2.b	VFR, DVFR Flt Notification Messages	*	*	P
3.2.1.3.1.1.7.2.2.3	Destination FSDPS Distribution	Lead-In	Lead-In	
3.2.1.3.1.1.7.2.2.3.a	VFR, DVFR Flt Notification Upon Activation		3.4.3	P
3.2.1.3.1.1.7.2.2.3.b	VFR, DVFR F/P Activity		3.4.3	P
3.2.1.3.1.1.7.2.2.3.c	VFR, DVFR F/P Closure Arr Msg		3.4.3	P
3.2.1.3.1.1.7.3	SAR Data Management		3.3.2.2.1.c	P
3.2.1.3.1.1.7.4	Data Management Security	*	*	P
3.2.1.3.1.1.8	Monitor & Control Reqs.	Lead-In	Lead-In	
3.2.1.3.1.1.8.1	Computer Operator Terminal Console	3.7.3	3.3.5	P
3.2.1.3.1.1.8.2	Display Requirements	3.7.3	3.3.5	P
3.2.1.3.1.1.8.3	Status & Performance Cntrol	3.7.3	3.3.5	P
3.2.1.3.1.1.9	Event Reconstruction Reqs.	Title	Title	
3.2.1.3.1.1.9.1	Recording		3.3.6	P
3.2.1.3.1.1.9.2	Reconstruction	Lead-In	Lead-In	
3.2.1.3.1.1.9.2.a	Time Period		3.3.6.2	P
3.2.1.3.1.1.9.2.b	Aircraft		3.3.6.2	P
3.2.1.3.1.1.9.2.c	Specialist Position		3.3.6.2	P
3.2.1.3.1.1.10	Coded Time Source	3.3.1.4	3.5.3.6	P
3.2.1.3.1.2	Performance Requirements	Lead-In	Lead-In	
3.2.1.3.1.2.1	Failure Resolution	3.3.1.3.5		F
3.2.1.3.1.2.2	Data Acceptance		3.4.3.1	P
3.2.1.3.1.2.3	Support	3.6.1.1	3.2	F

Legend: P= PASS, F=FAILURE, P/C= PASS WITH COMMENT, X= NOT APLICABLE

NAS SYSTEM SPECIFICATION NAS-SS-1000 VOLUME II		CROSS REFERENCE		REMARKS
PARA. NO	REQUIREMENT DESCRIPTION	FAA-E-2683C	FAA-E-2685C	
3.2.1.3.1.2.4	(Reserved-Deleted 10197)			
3.2.1.3.1.2.5	Data Integrity		3.2.1.2.5	P
3.2.1.3.1.2.6	Data Processing	Title	Title	
3.2.1.3.1.2.6.1	Multiple Flight Plans		3.4.3.2	P
3.2.1.3.1.2.6.2	Airport List		3.3.2.3	P/C
3.2.1.3.1.2.6.3	Weather Data Processing	Lead-In	Lead-In	
3.2.1.3.1.2.6.3.1	(Reserved - Deleted)			
3.2.1.3.1.2.6.3.2	RWP/MWP Data Products	*	*	X
3.2.1.3.1.2.6.3.3	(Reserved - Deleted)			
3.2.1.3.1.2.6.3.4	NOTAM Entry Processing	*	3.2.1.2.2	P
3.2.1.3.1.2.6.3.4.1	Processed NOTAM Handling		3.2	P
3.2.1.3.1.2.6.3.5	Mil Op/SUA Processing	Lead-In	Lead-In	
3.2.1.3.1.2.6.3.5.a	Maintain Information		3.3.2.2.1.b	X
3.2.1.3.1.2.6.3.5.b	Update Information		3.7.1.1	X
3.2.1.3.1.2.6.3.5.b.1	Update Info Upon Boundary Change		3.7.1.1	X
3.2.1.3.1.2.6.3.5.b.2	Update Info Upon Activation/Deactivation		3.7.1.1	X
3.2.1.3.1.2.6.3.6	Weather Data Base Processing	Lead-In	Lead-In	
3.2.1.3.1.2.6.3.6.a	Purge Aeronautical Information		3.3.2.2.1	P
3.2.1.3.1.2.6.3.6.b	Purge Individual PIREPs		3.3.2.1.2.b	P
3.2.1.3.1.2.6.3.7	(Reserved - Deleted by NCP10197)			
3.2.1.3.1.2.6.4	SAR Data Processing			X
3.2.1.3.1.2.6.4.1	SAR Report Generation	Lead-In	Lead-In	
3.2.1.3.1.2.6.4.1.a	QALQ		3.4.3	P
3.2.1.3.1.2.6.4.1.b	INREQ		3.4.3	P
3.2.1.3.1.2.6.4.1.c	ALNOT		3.4.3	P
3.2.1.3.1.2.6.4.2	(Reserved - Deleted by NCP 11047)			
3.2.1.3.1.2.6.4.3	(Reserved - Deleted by NCP 11047)			

Legend: P= PASS, F= FAILURE, P/C= PASS WITH COMMENT, X= NOT APPLICABLE

NAS SYSTEM SPECIFICATION NAS-SS-1000 VOLUME II		CROSS REFERENCE		REMARKS
PARA. NO	REQUIREMENT DESCRIPTION	FAA-E-2683C	FAA-E-2685C	
3.2.1.3.1.2.6.4.4	SAR Transmission		3.4.6.2	P
3.2.1.3.1.2.6.5	LE Data Processing		3.3.2	P
3.2.1.3.2.6.6	(Reserved - Deleted by NCP11047)			
3.2.1.3.1.2.6.7	(Reserved - Deleted by NCP11047)			
3.2.1.3.2.6.8	MBO Terminal	*	*	X
3.2.1.3.1.2.6.8.1	MBO Terminal Access Times	*	*	X
3.2.1.3.1.2.6.9	General Flight Service Message Processing	Lead-In	Lead-In	
3.2.1.3.1.2.6.9.a	Preferred Route Information		3.3.2.3.4	P
3.2.1.3.1.2.6.9.b	Administrative Messages		3.3.2.2	P/C
3.2.1.3.1.2.6.9.c	General Information Messages		3.3.2.2	P/C
3.2.1.3.1.2.6.10	PIREP Handling		3.7.1.1	P/C
3.2.1.3.1.2.7	Flight Data Management	Title	Title	
3.2.1.3.1.2.7.1	Proposed Flight Plan Storage		3.3.2	X
3.2.1.3.1.2.7.2	Active Flight Plan Storage		3.3.2	X
3.2.1.3.1.2.7.3	Flight Data Distribution		3.7.1.1	P/C
3.2.1.3.1.2.8	Monitor & Control Requirements	Title	Title	
3.2.1.3.1.2.8.1	Display Requirements		3.7.3.1.1	X
3.2.1.3.1.2.9	Event Reconstruction Requirements	Title	Title	
3.2.1.3.1.2.9.1	Data Recording		3.3.6	P
3.2.1.3.1.2.9.2	(Reserved - Deleted)			
3.2.1.3.1.2.9.3	Voice Recording & Reconstruction	Reference	Reference	
3.2.1.3.1.2.10	Joint FSDPS/AFSSWS Performance Requirements	Title	Title	
3.2.1.3.1.2.10.1	Response Times	Lead-In	Lead-In	
3.2.1.3.1.2.10.1.a	Response Time		3.7.1.1	P/C
3.2.1.3.1.2.10.1.b	Hazardous Weather Mean Response Time		3.7.1.1	P/C
3.2.1.3.1.2.10.2	Flight Data Response		3.7.1.1	P/C
3.2.1.3.1.2.10.3	AWP Data Products		3.7.1.1	P/C

Legend: P= PASS, F= FAILURE, P/C= PASS WITH COMMENT, X= NOT APPLICABLE

NAS SYSTEM SPECIFICATION NAS-SS-1000 VOLUME II		CROSS REFERENCE		REMARKS
PARA. NO	REQUIREMENT DESCRIPTION	FAA-E-2683C	FAA-E-2685C	
3.2.1.3.1.3	FSDPS Functional/Physical Interfaces	Lead-In	Lead-In	
3.2.1.3.1.3-1	FSDPS Interface Characteristics	Table	Table	
3.2.1.3.1.3-1.a	ACCC FSDPS	*	*	X
3.2.1.3.1.3-1.b	FSDPS ACCC	*	*	X
3.2.1.3.1.3-1.c	(Reserved - Deleted by NCP 10197)			
3.2.1.3.1.3-1.d	AFSSWS FSDPS		*	P/C
3.2.1.3.1.3-1.e	FSDPS AFSSWS	*	*	P/C
3.2.1.3.1.3-1.f	AWP FSDPS		3.2.1.2.2	P
3.2.1.3.1.3-1.g	FSDPS AWP		3.2.1.2.2	P
3.2.1.3.1.3-1.h	FSDPS MBO	*	*	X
3.2.1.3.1.3-1.i	MBO FSDPS	*	*	X
3.2.1.3.1.3-1.j	FSDPS MPS	*	*	X
3.2.1.3.1.3-1.k	MPS FSDPS	*	*	X
3.2.1.3.1.3-1.l	FSDPS OTHER ACCC		3.4.3	X
3.2.1.3.1.3-1.m	OTHER ACCC FSDPS		3.4.3	X
3.2.1.3.1.3-1.n	FSDPS OTHER FSDPS		3.4.3.5.1.1	P
3.2.1.3.1.3-1.o	OTHER FSDPS FSDPS		3.4.3.5.1.1	P
3.2.1.3.1.3-1.p	(Reserved - Deleted by NCP10197)			
3.2.1.3.1.3-1.q	(Reserved - Deleted by NCP10197)			
3.2.1.3.1.3-1.r	(Reserved - Deleted by NCP11047)			
3.2.1.3.1.3-1.s	(Reserved - Deleted by NCP11047)			
3.2.1.3.1.3-1.t	(Reserved - Deleted by NCP10197)			
3.2.1.3.1.3-1.u	(Reserved - Deleted by NCP10197)			
3.2.1.3.1.3-1.v	DUATS FSDPS	*	*	X
3.2.1.3.1.3-1.w	FSDPS DUATS	*	*	X
3.2.1.3.2	AFSS Work Station	Descript.	Descript.	
3.2.1.3.2.1	AFSSWS Functional Characteristics	Lead-In	Lead-In	
3.2.1.3.2.1.1	Data Acceptance		3.2.2	F
3.2.1.3.2.1.2	Data Entry		3.2.2	F

Legend: P= PASS, F=FAILURE, P/C= PASS WITH COMMENT, X= NOT APPLICABLE

NAS SYSTEM SPECIFICATION NAS-SS-1000 VOLUME II		CROSS REFERENCE		REMARKS
PARA. NO	REQUIREMENT DESCRIPTION	FAA-E-2683C	FAA-E-2685C	
3.2.1.3.2.1.3	Data Processing	Title	Title	
3.2.1.3.2.1.3.1	Alphanumeric Data		3.2.2	F
3.2.1.3.2.1.3.2	(Reserved - Deleted by NCP10197)			
3.2.1.3.2.1.3.2.1.1.4	Paging		3.4.2	P
3.2.1.3.2.1.3.2.1.2.2	Display		3.2.2	P
3.2.1.3.2.1.4	(Reserved - Deleted by 10197)			
3.2.1.3.2.1.5	PIREP Handling		3.3.2.1.3	P
3.2.1.3.2.1.6	Monitor & Control Requirements	TBD	TBD	X
3.2.1.3.2.1.6.1	Monitor & Control Reporting	3.7.3	3.3.5	P
3.2.1.3.2.1.6.2	System Restoration	3.7.3	3.3.5	P
3.2.1.3.2.1.7	(Reserved - Deleted by NCP10197)			
3.2.1.3.2.1.8	Data Output	Title	Title	
3.2.1.3.2.1.8.1	Display	3.3.2.2		P
3.2.1.3.2.1.8.2	Hardcopy Support	Lead-In	Lead-In	
3.2.1.3.2.2	Performance Characteristics	3.3.1.1.4		X
3.2.1.3.2.2.1	Data Entry	3.6.1.2.2		X
3.2.1.3.2.3	AFSSWS Functional/Physical Interfaces	Lead-In	Lead-In	
3.2.1.3.2.3-1	AFSSWS Interface Characteristics	Table	Table	
3.2.1.3.2.3-1.a	AFSSWS FSDPS		3.2	P/C
3.2.1.3.2.3-1.b	FSDPS AFSSWS		3.2	P/C
3.2.1.3.2.3-1.c	AFSSWS FSS SP	3.3.2.3		P
3.2.1.3.2.3-1.d	FSS SP AFSSWS	3.3.2.3		P
3.2.1.3.2.3-1.e	AFSSWS VOR	*	*	X
3.2.1.5.4	Aviation Weather Processor	Descript.	Descript.	
3.2.1.5.4.1	Functional Characteristics	Lead-In	Lead-In	
3.2.1.5.4.1.1	Data Collection	Table	Table	
3.2.1.5.4.1.1.1	Aeronautical Data	Lead-In	Lead-In	
3.2.1.5.4.1.1.1.a	Traffic Management Data	*	*	P

LEGEND: P= PASS, F= FAILURE, P/C= PASS WITH COMMENT, X= NOT APPLICABLE

NAS SYSTEM SPECIFICATION NAS-SS-1000 VOLUME II		CROSS REFERENCE		REMARKS
PARA. NO	REQUIREMENT DESCRIPTION	FAA-E-2683C	FAA-E-2685C	
3.2.1.5.4.1.1.1.b	NOTAMs Data		3.2.1.2	P
3.2.1.5.4.1.1.1.c	Military Operations		3.2.1.2	P
3.2.1.5.4.1.1.1.d	Law Enforcement Information		3.2.1.2	P
3.2.1.5.4.1.1.1.e	Preferred Route Information		3.2.1.2	P
3.2.1.5.4.1.1.2	Meteorological Data	Lead-In	Lead-in	
3.2.1.5.4.1.1.2.a	Surface Weather Observation		3.2.1.2	F
3.2.1.5.4.1.1.2.b	ACF Weather Advisories		3.2.1.2	P
3.2.1.5.4.1.1.2.c	PIREPs		3.2.1.2	P
3.2.1.5.4.1.1.2.d	Terminal Forecasts		3.2.1.2	F
3.2.1.5.4.1.1.2.e	Area Forecasts		3.2.1.2	F
3.2.1.5.4.1.1.2.f	Radar Weather Reports		3.2.1.2	F
3.2.1.5.4.1.1.2.g	Weather Warnings		3.2.1.2	P
3.2.1.5.4.1.1.2.h	Current Weather Conditions Aloft		3.2.1.2	P
3.2.1.5.4.1.1.2.i	Winds Aloft		3.2.1.2	P
3.2.1.5.4.1.1.2.j	(Reserved - Deleted by NCP11047)			
3.2.1.5.4.1.1.2.k	Weather Information		3.2.1.2	F
3.2.1.5.4.1.2	Data Processing	Title	Title	
3.2.1.5.4.1.2.1	General Products	Lead-In	Lead-In	
3.2.1.5.4.1.2.1.a	Manual Entries		3.2.1.2.4	P
3.2.1.5.4.1.2.1.b	(Reserved - Deleted by NCP10197)			
3.2.1.5.4.1.2.1.c	(Reserved - Deleted by NCP10197)			
3.2.1.5.4.1.2.1.d	Generate Law Enforcement		3.2.1.2	P
3.2.1.5.4.1.2.1.e	Perform Processing		3.2.1.2	X
3.2.1.5.4.1.2.2	Editing		3.2.1.2.4	P
3.2.1.5.4.1.3	Maintain Data Base		3.2.1.1	P
3.2.1.5.4.1.4	Distribution	Lead-In	Lead-In	
3.2.1.5.4.1.4.a	Distribute All Flight Service Products		3.2.1.2	P/C
3.2.1.5.4.1.4.b	Distribute AWP Spec. Gen. Products		3.2.1.1	P/C
3.2.1.5.4.1.4.c	Distribute NOTAM Data		3.2.1.2.2	P

Legend: P= PASS, F= FAILURE, P/C= PASS WITH COMMENT, X= NOT APPLICABLE

NAS SYSTEM SPECIFICATION NAS-SS-1000 VOLUME II		CROSS REFERENCE		REMARKS
PARA. NO	REQUIREMENT DESCRIPTION	FAA-E-2683C	FAA-E-2685C	
3.2.1.5.4.1.4.d	Distribute PIREPs		3.2.1.2.2	P
3.2.1.5.4.1.4.e	Distribute Processed NOTAMs		3.2.1.2	P
3.2.1.5.4.1.4.f	Distribute Traffic Management Information	*	*	P
3.2.1.5.4.1.5	Operation and Maintenance Monitor	Lead-In	Lead-In	
3.2.1.5.4.1.5.a	System-Health Monitoring and Data		3.2.1.2.6	X
3.2.1.5.4.1.5.a.1	Monitor Critical Parameters		3.2.1.2.6	X
3.2.1.5.4.1.5.a.2	Operating Status		3.2.1.2.6	P
3.2.1.5.4.1.5.a.3	Alarm		3.2.1.2.6	P
3.2.1.5.4.1.5.b	Maintenance Control	3.3.1.3.5		F
3.2.1.5.4.1.5.c	Transmit		3.4.7	X
3.2.1.5.4.1.6	System Recording and Reporting	Lead-In	Lead-In	
3.2.1.5.4.1.6.a	Products Distributed		3.3.6	P
3.2.1.5.4.1.6.b	Text/Data Input		3.3.6	P
3.2.1.5.4.1.6.c	Formatted Statistical Reports	3.7.3.1		P
3.2.1.5.4.1.6.d	Information Accrued	3.7.3.1		P
3.2.1.5.4.1.7	Standard Time Reference	3.3.1.4	3.5.3.6	P
3.2.1.5.4.2	Performance Characteristics	Lead-In	Lead-In	
3.2.1.5.4.2.1	Hazardous Weather Processing	3.6.2.2.2		P
3.2.1.5.4.2.2	Data Base Processing	Lead-In	Lead-In	
3.2.1.5.4.2.2.a	Purge Aeronautical Information		3.3.2.2.1	X
3.2.1.5.4.2.2.b	Purge Individual PIREPs		3.3.2.1.2.b	X
3.2.1.5.4.2.2.c.1	Accumulate Surface Observations		3.3.2.1.2.a	F
3.2.1.5.4.2.2.c.2	Maintain Surface Observations		3.3.2.1.2.a	X
3.2.1.5.4.2.2.c.3	Accumulate Weather Conditions		3.3.2.1.2.a	F
3.2.1.5.4.2.2.c.4	Maintain Weather Conditions		3.3.2.1.2.a	X
3.2.1.5.4.2.2.d.1	Accumulate Unexpired Terrain Forecasts		3.3.2.1.2.1	P
3.2.1.5.4.2.2.d.2	Maintain Unexpired Terrain Forecasts		3.3.2.1.2.1	X
3.2.1.5.4.2.2.e.1	Accumulate Unexpired Area Forecasts		3.3.2.1.2.j	P

Legend: P= PASS, F= FAILURE, P/C= PASS WITH COMMENT, X= NOT APPLICABLE

NAS SYSTEM SPECIFICATION NAS-SS-1000 VOLUME II		CROSS REFERENCE		REMARKS
PARA. NO	REQUIREMENT DESCRIPTION	FAA-E-2683C	FAA-E-2685C	
3.2.1.5.4.2.2.e.2	Maintain Unexpired Area Forecasts		3.3.2.1.2.j	X
3.2.1.5.4.2.2.f.1	Accumulate Unexpired Wind Temperature Forecasts		3.3.2.1.2.m	P
3.2.1.5.4.2.2.f.2	Maintain Unexpired Wind Temperature Forecasts		3.3.2.1.2.m	X
3.2.1.5.4.2.2.g.1	Accumulate Unexpired Temperature		3.3.2.1.2.y	P
3.2.1.5.4.2.2.g.2	Maintain Unexpired Temperature		3.3.2.1.2.y	X
3.2.1.5.4.2.2.g.3	Accumulate Unexpired CWSU Weather		3.3.2.1.2.y	P
3.2.1.5.4.2.2.g.4	Maintain Unexpired CWSU		3.3.2.1.2.y	X
3.2.1.5.4.2.2.h.1	Accumulate Current Weather Warnings/Advisories		3.3.2.1.2.d	P/C
3.2.1.5.4.2.2.h.2	Maintain Current Weather Warnings		3.3.2.1.2.d	P/C
3.2.1.5.4.2.2.i	Unexpired Law Enforcement Information		3.3.2.2.1.d	P/C
3.2.1.5.4.2.2.j	Radar Weather Reports		3.3.2.1.2.n	P/C
3.2.1.5.4.2.2.k.1	Accumulate Unexpired Traffic Management Data	*	*	P
3.2.1.5.4.2.2.k.2	Maintain Unexpired Traffic Management Data	*	*	P
3.2.1.5.4.2.3	Specialist Support	Lead-In	Lead-In	
3.2.1.5.4.2.3.a	Display Information	3.6.2.2.2		P/C
3.2.1.5.4.2.3.b	User Friendly Interactive		3.4.2	P
3.2.1.5.4.2.3.c	Respond to a Specialist	3.6.2.2.2		P/C
3.2.1.5.4.2.4	Data Collection	Lead-In	Lead-In	
3.2.1.5.4.2.4.a	NWS Genereted Weather	Lead-In	Lead-in	
3.2.1.5.4.2.4.a.1	Terminal Forecasts	3.6.2.2.2		F
3.2.1.5.4.2.4.a.2	Area Forecasts	3.6.2.2.2		F
3.2.1.5.4.2.4.a.3	Winds Aloft Forecast	3.6.2.2.2		P
3.2.1.5.4.2.4.b	Current Weather	Lead-In	Lead-In	
3.2.1.5.4.2.4.b.1	Surface Weather Observation	3.6.2.2.2		F
3.2.1.5.4.2.4.b.2	CWSU Weather Advisories and Impact	3.6.2.2.2		F
3.2.1.5.4.2.4.b.3	PIREPs	3.6.2.2.2		F
3.2.1.5.4.2.4.b.4	Radar Weather reports	3.6.2.2.2		F
3.2.1.5.4.2.4.b.5	Current Weather Conditions Aloft	3.6.2.2.2		F

Legend: P= PASS, F= FAILURE, P/C= PASS WITH COMMENT, X= NOT APPLICABLE

NAS SYSTEM SPECIFICATION NAS-SS-1000 VOLUME II		CROSS REFERENCE		REMARKS
PARA. NO	REQUIREMENT DESCRIPTION	FAA-E-2683C	FAA-E-2685C	
3.2.1.5.4.2.4.c	Hazardous Weather	Lead-In	Lead-In	F
3.2.1.5.4.2.4.c.1	Hazardous Weather Information-Urgent PIREPs	3.6.2.2.2		F
3.2.1.5.4.2.4.c.2	Hazardous Weather Information-Weather Warnings/Adv.	3.6.2.2.2		F
3.2.1.5.4.2.4.d	Aeronautical Information	Lead-In	Lead-In	
3.2.1.5.4.2.4.d.1	Processed NOTAMs	3.6.2.2.2		F
3.2.1.5.4.2.4.d.2	Traffic Management Summary	*	*	F
3.2.1.5.4.2.4	Other Information	Lead-In	Lead-In	
3.2.1.5.4.2.4.e.1	Law Enforcement Data	3.6.2.2.2		F
3.2.1.5.4.2.4.e.2	Military Operations	3.6.2.2.2		F
3.2.1.5.4.2.4.e.3	Route Information	3.6.2.2.2		F
3.2.1.5.4.2.4.e.4	Administrative Information	3.6.2.2.2		F
3.2.1.5.4.2.5	Distribution	Lead-In	Lead-In	
3.2.1.5.4.2.5.a	Time of Receipt	Lead-In	Lead-In	
3.2.1.5.4.2.5.a.1	Data Collected & Edited	3.6.2.2.2		F
3.2.1.5.4.2.5.a.2	Flight Service Products	3.6.2.2.2		F
3.2.1.5.4.2.5.a.3	Data Collected	3.6.2.2.2		F
3.2.1.5.4.2.5.b	Data Collected	3.6.2.2.2		F
3.2.1.5.4.2.5.c	Unprocessed NOTAMs	3.6.2.2.2		F
3.2.1.5.4.2.6	Storage	Lead-In	Lead-In	
3.2.1.5.4.2.6.a	Off-Line Storage		3.3.6	P
3.2.1.5.4.2.6.b	On-Line Storage		3.2.1.1	X
3.2.1.5.4.2.7	Static Data Base		3.2.1.1	X
3.2.1.5.4.2.7.a	Victor		3.3.2.3(1)	X
3.2.1.5.4.2.7.b	Selected Location		3.3.2.3(2)	X
3.2.1.5.4.2.7.c	Departure/Arrival Routes		3.3.2.3(3)	X
3.2.1.5.4.2.7.d	Preferred Routes		3.3.2.4(4)	X
3.2.1.5.4.2.7.e	Weather Reporting		3.3.2.3(5)	X
3.2.1.5.4.2.7.f	Airports		3.3.2.3(6)	X

Legend: P= PASS, F= FAILURE, P/C= PASS WITH COMMENT, X= NOT APPLICABLE

NAS SYSTEM SPECIIFICATION NAS-SS-1000 VOLUME II		CROSS REFERENCE		REMARKS
PARA. NO	REQUIREMENT DESCRIPTION	FAA-E-2683C	FAA-E-2685C	
3.2.1.5.4.2.7.g	Special Use Airspace		3.3.2.3(7)	X
3.2.1.5.4.2.8	Standard Time Reference	3.3.1.4	3.5.3.6	P
3.2.1.5.4.3	AWP Functional/Physical Interfaces	Lead-In	Lead-In	
3.2.1.5.4.3-1	AWP Interface Characteristics	Table	Table	
3.2.1.5.4.3-1.a	AWP AWP SP	3.3.2.3		P/C
3.2.1.5.4.3-1.b	AWP SP AWP	3.3.2.3		P/C
3.2.1.5.4.3-1.c	AWP FSDPS		3.2.1.2	P/C
3.2.1.5.4.3-1.d	FSDPS AWP		3.2.1.2	P/C
3.2.1.5.4.3-1.e	AWP FSDPS AER	3.2.1.1		P/C
3.2.1.5.4.3-1.f	FSDPS AER AWP	3.2.1.1		P/C
3.2.1.5.4.3-1.g	AWP FSDPS TC	3.2.1.1		P/C
3.2.1.5.4.3-1.h	FSDPS TC AWP	3.2.1.1		P/C
3.2.1.5.4.3-1.i	AWP MPS	*	*	X
3.2.1.5.4.3-1.j	MPS AWP	*	*	X
3.2.1.5.4.3-1.k	AWP OTHER AWP		3.2.1.1	P/C
3.2.1.5.4.3.1.l	OTHER AWP AWP		3.2.1.1	P/C
3.2.1.5.4.3-1.m	TMP AWP	*	*	X
3.2.1.5.4.3-1.n	AMP WMSCR	*	*	X
3.2.1.5.4.3-1.o	WMSCR AWP	*	*	X

Legend: P= PASS, F= FAILURE, P/C= PASS WITH COMMENT, X= NOT APPLICABLE

APPENDIX B

OT&E/INTEGRATION TEST
PROGRAM TECHNICAL REPORTS (PTR)

ACN 230 PTR LIST
7/23/90 THROUGH 7/27/90

PTR #	Date	Remarks	Retested	Closed
07230818X	7/23	WX Incorrect	Yes	Yes
07230819X	7/23	WX Incorrect	Yes	No
07230820X	7/23	WX Incorrect	Yes	No
07230821X	7/23	QALQ Problems	Yes	No
07230822X	7/23	Summary Wrong	Yes	Yes
07230823X	7/23	Sequence Definition Problem	No	No
07240824X	7/24	Military Stopover	Yes	Yes
07240825X	7/24	Prestored FP Problem	No	No
07240826X	7/24	"S" Flag	Yes	No
07240827X	7/24	$Flite3 Trapped Out	No	No
07240828X	7/24	Service B Problem	Yes	No
07250012A	7/25	Non-Standard Request Reply Problem	No	No
07250013A	7/25	LAX SA Does Not Display	No	No
07250014A	7/25	SA Does Not Display	No	No
07260015A	7/26	VM SA Problem	No	No
07260016A	7/26	$AOPR Duel Failure System Abort	No	No
07270017A	7/27	$GS2 Trapped Out	No	No
07270018A	7/27	WX Display Problem	No	No
07270019A	7/27	$AOPR Duel Failure System Abort	No	No
07270020A	7/27	$AOPR Duel Failure System Abort	No	No
07270021A	7/27	Not All WX Returned	No	No
07270022A	7/27	WX Retrival	No	No

NOTE: All PTRs on this list still open are considered to be High Priority by ACN 230.

APPENDIX C

SYSTEM LEVEL VERIFICATION (SLV) TEST "CRITICAL" PROGRAM TECHNICAL REPORTS (PTR)

Software Deployment PTR Status
"CRITICAL"

PTR #	Cl	St	Priority	Title	As of: 07/23/90
06220002G	H	ui	ui	Global Svc B 'Seq' in Tranid--NOTE: NOT IMPORTANT	
06200508K	H	ui		WX0 trapped	
06200510K	H	ui		AFSS Histfile index	
06270522K	H	ui		RT2 trap	
06130685X	H	ui		WDA FTW retrieved ZME (Memphis) MIS - F10	
06190715X	H	ui		WR IPT..BGR missed FA, WST, AC for VT, NH - F36	
06190723X	H	ui		WI (IPT..BGR) & VM BGR - different results - F50	
06190724X	H	ui		NS RL 521 (etc) returned two copies - F51	
06190728X	H	ui		WD AOO..PIT Got ZAU MIS -Chicago too far - F55	
06200733X	H	ui		WD PIT..BLF Gets ZAU & not ZTL - F60	
06210747X	H	ui		MKCC WST displayed always - F71	
06210753X	H	ui		WDA FTW got MKCC WST - Eff area AR - F77	
06260773X	H	ui		Two R flags on FACA MMMX - NS RC - F97	
06270777X	H	ui		NADIN looping - F106	
06270779X	H	ui		MWN SP Multiplied - F108	
06290796X	H	ui		I List entries not marked as Overdue - F120	
06290801X	H	ui		WX trap - F127	
				TOTAL	17
06260775X	H	en	oh	FACA MMMX in multiple parts - last one retained - F99	
				TOTAL	1
06200507K	H	du	cl	PR2 trapped	
06210513K	H	du		Print Trap	
06220516K	H	du		After CPU failure - Bad partial FP	
06130684X	H	pr		VM SAT SYNS has BOS FA attached - F9	
06140693X	H	pr		'W' Flag-"DWA" Gives "Report no longer available"-F14	
06140698x	H	pr		FP data entered twice-Auto Addressed differently - F24	
06150721X	H	pr		One Transmit B message passed another on Xmit B Q - F30	
06150722X	H	pr		LATER-AFSSHIST entry of B msg-but in BHIST earlier-F31	
06180730X	H	pr		'O UP03' AOPR created in wrong CPU - F48	
06200742X	H	du		Inbound ICAO DEP Msg format incorrect - F59	
06210752X	H	pr		DD Gave no data @ 1405 - Data entered between 12-13Z -F74	
06220757X	H	pr		IFR Auto addressing - ZSU - F81	
06260767X	H	pr		Wx Brief on SAN..CRE inconsistant - F91	
06260770X	H	pr		V Flag - No Message - F94	
06260774X	H	pr		Two part FDC NO in wrong format - F98	
06280791X	H	du		No F flag w/ AWP line patched out - F113	
				TOTAL	16
06210512K	H	id	id	$CY errors - $AOPR I/O error 40 -- S/W "went away"	
06250519K	H	id		Prestored FP's # 57/58 Unavailable	
06190707X	H	id		Flags vs Alert Msg not consistant - F46	
06150717X	H	id		STOP 2002 did not work for 15 min. - F32	
06190725X	H	id		E Flag-DE gives no alert pending. - F52	
06270784X	H	id		Identical FPs/Zone - Different results - F104	
				TOTAL	6
06190708X	H	bg	to	NKX..NJK Auto Addressed KOIAYXXX or KLANYFYX - F37	
06150720X	H	bg		AutoAddressing - STIS - QDB => PADQMYNA - F29	
06200732X	H	bg		AutoAddr PANC.PABE - PAZA In OP field -xmit B KZABZQZX-F560	
06200736X	H	bg		FP ACID; CX; FPC - No Partial FP - F63	
06210756X	H	bg		WT PSP-YUM; GPT UA Displayed - F79	
06220758X	H	bg		WD AOO..ISP (No ACID) Making up ACID on PB - F83	

Software Deployment PTR Status

PTR #	Cl	St	Priority	Title	As of: 07/23/90
06260776X	H	bg		Mil FP Auto Addressed KDAAYXYX twice - F100	
06280787X	H	bg		Could not transmit off C List - F119	
06280790X	H	bg		Military Stopover OFF....SZL gives IND & BGR - F112	
				TOTAL	9
06220001G	H	bg	cm	WST Timeouts	
06220005G	H	bg		SD, del lines, CM, CP, ST - $SU trapped	
06220515K	H	bg		Queue trap	
03140624X	H	pi		Change WST to unsched w/ MEDI of 120 min.	
06140699X	H	bg		Wants IR/VR treated as mult. reprts timing out on last-F25	
06180729X	H	bg		After AOPR dual failure - Activating CPU0- No backup-F47	
06200740X	H	bg		EVR went into Inspect - F67	
06260769X	H	bg		Print trapped during startup - F93	
06290798X	H	bg		$AOPR trap - F124	
				TOTAL	9