TN
90/
56

COPY 2

ILS Mathematical Modeling Study of an ILS Localizer and Glide Slope Proposed for Runway 26R Phoenix Sky Harbor International Airport, Phoenix, Arizona

James D. Rambone

MAY 14 1990
TECHNICAL CENTER LIBRARY
ATLANTIC CITY, N.J. 08405

February 1991

DOT/FAA/CT-TN90/56

Document is on file at the Technical Center Library, Atlantic City International Airport, N.J. 08405

U.S. Department of Transportation
Federal Aviation Administration

Technical Center
Atlantic City International Airport, N.J. 08405

technical note technical note

NOTICE

This document is disseminated under the sponsorship of the U.S. Department of Transportation in the interest of information exchange. The United States Government assumes no liability for the contents or use thereof.

The United States Government does not endorse products or manufacturers. Trade or manufacturers' names appear herein solely because they are considered essential to the objective of this report.

Technical Report Documentation Page

1. Report No.	2. Government Accession No.	3. Recipient's Catalog No.
DOT/FAA/CT-TN90/56		

4. Title and Subtitle	5. Report Date
ILS MATHEMATICAL MODELING STUDY OF AN ILS LOCALIZER AND GLIDE SLOPE PROPOSED FOR RUNWAY 26R PHOENIX SKY HARBOR INTERNATIONAL AIRPORT, PHOENIX, ARIZONA	February 1991
	6. Performing Organization Code: ACD-330
7. Author(s): James D. Rambone	8. Performing Organization Report No.: DOT/FAA/CT-TN90/56
9. Performing Organization Name and Address: Department of Transportation, Federal Aviation Administration, Technical Center, Atlantic City International Airport, N.J. 08405	10. Work Unit No. (TRAIS)
	11. Contract or Grant No.: T0603S
12. Sponsoring Agency Name and Address: U. S. Department of Transportation, Federal Aviation Administration, Program Engineering Service, Washington, D.C. 20590	13. Type of Report and Period Covered: Technical Note, December 1990
	14. Sponsoring Agency Code

15. Supplementary Notes

16. Abstract

This Technical Note describes the instrument landing system (ILS) math modeling performed by the Federal Aviation Administration (FAA) Technical Center at the request of the Western Pacific Region, AWP-452. Computed localizer data are presented showing the effects of several large structures on the performance of an ILS localizer proposed for runway 26R at the Phoenix Sky Harbor International Airport. The Western Pacific Region is concerned that reflections from several large buildings and fuel storage tanks may degrade the localizer course beyond Category I tolerances. Modeled course structure results indicate that Category I localizer performance should be obtained with a 14-element, self-clearing log periodic dipole antenna installed at the currently proposed location. Computed clearance orbit results indicate satisfactory linearity, course crossover, and signal clearance levels.

Data are also presented showing the computed performance for a glide slope proposed for runway 26R at the Phoenix Sky Harbor International Airport. As requested, a capture effect system was modeled at the proposed glide slope site. AWP-452 is concerned that sharp terrain gradients in front of the site may adversely affect glide slope performance. Glide slope modeling computed only the effect of terrain on glide slope performance. Modeled path structure and level run plots are provided for the proposed capture effect system. Results indicate that a capture effect system modeled at the proposed site should meet Category I path structure, linearity, and symmetry tolerances.

17. Key Words	18. Distribution Statement
Instrument Landing System Math Modeling ILS Glide Slope, ILS Localizer ILS/Phoenix Sky Harbor, AZ Phoenix Sky Harbor, FL/ILS	Document is on file at the Technical Center Library, Atlantic City International Airport, NJ 08405

19. Security Classif. (of this report)	20. Security Classif. (of this page)	21. No. of Pages	22. Price
UNCLASSIFIED	UNCLASSIFED	26	

Form DOT F 1700.7 (8-72) Reproduction of completed page authorized

TABLE OF CONTENTS

	Page
EXECUTIVE SUMMARY	vii
INTRODUCTION	1
Purpose	1
Background	1
DISCUSSION	1
ILS Math Models	1
ILS Math Modeling Performed	4
Data Presentation	4
Data Analysis	5
CONCLUSIONS	6
REFERENCES	6

LIST OF ILLUSTRATIONS

Figure		Page
1	Instrument Landing System Localizer Math Model Coordinate Systems.	9
2	Phoenix Sky Harbor Runway 26R, ILS Math Modeling Layout	10
3	Phoenix Sky Harbor Runway 26R, Reflecting Surface Details	11
4	Fuel Storage Tanks, Scatterer Definitions	12
5	Terrain Profile in Front of the Runway 26R Glide Slope Site	13
6	Terrain Profile Displaying Triple Diffraction Occurrence	14
7	Course Structure, Phoenix Sky Harbor Runway 26R Localizer	15
8	Clearance Orbit, Phoenix Sky Harbor Runway 26R Localizer	16
9	CSB and SBO Antenna Patterns, Phoenix Sky Harbor Runway 26R Localizer	17
10	Modeled Path Structure, Phoenix Sky Harbor Runway 26R Glide Slope, Capture Effect System	18
11	Modeled Level Run, Phoenix Sky Harbor Runway 26R Glide Slope, Capture Effect System	19

LIST OF TABLES

Table		Page
1	Localizer Antenna Model Input Data Summary	7
2	Localizer Reflecting Surfaces Data Summary	8
3	Glide Slope Data Summary	8

EXECUTIVE SUMMARY

This instrument landing system (ILS) math modeling study was performed at the request of the Western Pacific Region, AWP-452, to compute the effects of several large structures on the performance of an ILS localizer proposed for runway 26R at the Phoenix Sky Harbor International Airport. The localizer was modeled using a physical optics mathematical model developed by the Transportation Systems Center (TSC) and extensively modified by Ohio University. As requested by AWP-452, a 14-element, self-clearing log periodic dipole antenna array was modeled. Derogative effects from several large buildings and fuel storage tanks were considered. Reflections from other structures on the airport are not considered in this modeling study. Modeled course structure results indicate that Category I localizer performance should be obtained for runway 26R with the system installed at the currently proposed location. Computed clearance orbit results indicate satisfactory linearity, course crossover, and signal clearance levels.

AWP-452 also requested modeling of a capture effect glide slope proposed for runway 26R at the Phoenix Sky Harbor International Airport. The capture effect glide slope will be located 1150 feet back from runway threshold and 375 feet right offset of centerline. AWP-452 is concerned that sharp terrain gradients in front of the site may adversely affect glide slope performance. Glide slope modeling was conducted using physical optics computations in the Geometric Theory of Diffraction-3D (GTD-3D) model. The GTD computations in the GTD-3D model could not accommodate a triple diffraction occurrence caused by ramps, airlanes, and an expressway in front of the glide slope site. Glide slope modeling computed only the effect of terrain on glide slope performance. Modeled path structure and level run plots are provided for the proposed capture effect system. Results indicate that the proposed site modeled should meet Category I path structure, linearity, and symmetry tolerances.

INTRODUCTION

PURPOSE.

The purpose of this math modeling study was to provide computer modeled performance data for an instrument landing system (ILS) localizer and glide slope proposed for runway 26R at the Phoenix Sky Harbor International Airport.

BACKGROUND.

The Western Pacific Region will be installing an ILS localizer and glide slope to serve runway 26R at the Phoenix Sky Harbor International Airport. In support of this project, AWP-452 has requested a math modeling study through the Navigation and Landing Division, ANN-100, which, in turn, was forwarded to the Federal Aviation Administration (FAA) Technical Center for accomplishment. Localizer math modeling was requested for a 14-element, self-clearing log periodic dipole (LPD) antenna array to provide Category I performance. AWP-452 requested modeling of several large buildings and fuel storage tanks for their effect on the localizer proposed for runway 26R. Glide slope math modeling was also requested for a capture effect system proposed to serve runway 26R. The proposed site is located 1150 feet backset from threshold and 375 feet right offset of centerline. There is concern that sharp terrain gradients in front of the antenna site may adversely affect glide slope performance.

This modeling effort was performed under project T0603S. The Technical Program Manager is Mr. Edmund A. Zyzys. Additional information regarding this study may be obtained by contacting Mr. James D. Rambone at FTS 482-5373 or (609) 484-5373.

DISCUSSION

ILS MATH MODELS.

The FAA Technical Center conducts ILS mathematical computer model studies through application of physical optics or geometric theory of diffraction techniques to compute anticipated ILS performance. The modeling for the runway 26R localizer was performed using the physical optics model which was developed by the Transportation Systems Center (TSC), modified extensively by Ohio University, and then converted to the Technical Center's mainframe computer. References 1 through 4 describe the modeling technique and implementation. Reference 4 also provides validation data for the model.

This model operates using the physical optics principles by considering the structure or aircraft as a target or reflector. The reflecting object is modeled by considering it to be a collection of flat plates, whose profile is that of the specific structure. The flat plate representing the structure is located with a specified orientation and location on the airport.

This flat plate may be divided up into arbitrarily small areas, each of which is receiving incident electromagnetic radiation from the transmitting

antennas. The incident signals arrive at the respective incremental area with a specific amplitude and phase which are dependent on the phase and amplitude of the source currents in the transmitting antennas and the path length from the antennas to the incremental area on the plate. The fields are in effect terminated by currents in the conducting surface so that the boundary conditions at the conducting surface are met. These currents flowing in the incremental plate thus become source currents for the scattering signal.

Figure 1 illustrates the right-handed coordinate system used in this computer model with the origin located at the antenna site for localizer modeling. The positive x-axis is directed out beyond the threshold along runway centerline extended, the positive y-axis is directed to the left, the positive z-axis is directed up. Alpha, the angle between the base of a reflector and the x-axis, is measured in the counterclockwise direction. Delta is the angle between the surface of the reflector and the vertical direction. The large solid arrows in the figure point in the direction that the reflecting surface faces. A reflector facing in the negative y-direction has an alpha of 0 degrees. A reflector with a delta of 0 degrees is perpendicular to the ground (figure 1A). Delta is equal to -90 degrees for a horizontal reflector facing down (figure 1B). An alpha of 90 degrees, as shown in figure 1C, faces the reflector out along the positive x-axis. The reflecting surface is considered to be of infinite conductivity over the total surface and to have zero thickness. This assumption will result in a worst-case performance prediction. As previously indicated, the predicted radiation is calculated assuming an array of incremental, flat-plate antennas each with its own radiation pattern.

Course deviation indicator (CDI) deflections are computed as follows. First, the magnitude and phase of the radio frequency (RF) signals arriving at the aircraft location are determined for each surface independently. Next, a resultant RF signal is computed by vectorially combining the independent signals. CDI deflection is then computed from the resultant RF signal.

Some limitations do exist with this particular model; however, the resultant errors due to these limitations or assumptions are considered small. One limitation in the model is that it does not compute multiple reflections or diffractions. Another limitation is the assumption that the terrain is level and perfectly smooth.

The mathematical model used for the glide slope simulation was the Ohio University Geometrical Theory of Diffraction (OUGTD) model which was obtained from Ohio University under an FAA Technical Center contract. This program was written for Ohio University by Mr. Vichate Ungvichian to account for the interactions of electromagnetic waves when reflected and/or diffracted from the terrain between an ILS antenna and an aircraft (reference 5). The OUGTD program utilizes the Geometrical Theory of Diffraction (GTD) and the Uniform Theory of Diffraction (UTD) as the basic theories when computing the diffraction of the electromagnetic waves. The GTD and UTD theories both treat electromagnetic waves as rays. This is acceptable due to the localized nature of wave interactions at very high frequencies (above 100 megahertz (MHz)). This treatment allows one to include the multiple interaction (i.e. doubly diffracted, etc.) between neighboring ground plates with little computational effort. This is a very difficult task when using the Physical Optics theory.

The UTD theory is used to calculate the fields in the transition areas; the GTD theory is used in all other areas.

The GTD-3D model has a limitation. The GTD computation in the model cannot accommodate occurrences of triple diffraction caused by several sharp terrain gradients. If triple diffraction is encountered, erroneous results can occur.

The physical optics computation in the GTD-3D model, a less accurate technique used in computing wave propagation, does not have the capability to compute multiple reflections and diffractions of signals. This glide slope modeling study was performed using physical optics techniques due to occurrences of triple diffraction errors in the GTD computations.

The pseudo-3D version of the model was used for this modeling effort. This version uses a matrix of X, Y, and Z coordinates for the terrain to compute a new terrain profile for each observation point (simulated aircraft position). The term "pseudo-3D" is used to emphasize the fact that the model is not truly 3-dimensional, but rather considers the terrain to be invariant in the X direction. For each observation point and its associated terrain profile, the simulated (CDI) deflection is computed from the various combinations of rays. The subroutine that determines the profile was modified by FAA Technical Center engineers to eliminate some restrictions on establishing the origin and selection of coordinates.

Input data required by the 3-D model consists of two data files: the terrain matrix file and the input/control file. The terrain matrix file consists of X (distance perpendicular to the runway), Y (distance along the runway centerline extended), and Z (elevation values referenced to the base of the antenna mast). This coordinate system differs from the localizer model coordinate system previously defined (also shown in figure 1). The computer model applies an interpolation process to the terrain matrix file to determine a new terrain profile for each observation point along the flightpath. The new profile is that of the terrain directly below a line drawn from the ILS antenna to the observation point. This profile is the surface used in the computation of the glide slope RF energy at the observation point. The input/control file consists of data describing the antenna system (location, amplitude, and phase of each antenna element), along with other pertinent site and flightpath data.

Antenna heights were computed to produce actual path angles of approximately 3.0 degrees. Antenna current phasing for all simulations were computed using a simulation of the airborne phasing techniques detailed in the Flight Inspection Manual OAP 8200.1 (reference 6). In the simulation, samples of antenna current phase are recorded while flying the simulated aircraft along an approach angle of 1.5 degrees from 8 to 4 nautical miles (nmi) with respect to the site. Ten samples of antenna current phase are recorded for each antenna. Using average phase values, the phase of the upper antenna is adjusted for zero phase difference with respect to the lower antenna for sideband reference or capture effect systems. For the capture effect system, the phases of the lower and upper antennas are adjusted to result in zero phase difference with respect to the middle antenna. This technique is similar to the method originated by the Ohio University Avionics Center for their modeling applications.

ILS MATH MODELING PERFORMED.

Figure 2 shows the general orientation of the runway. The modified TSC localizer model was used to model the effects of the buildings and storage tank surfaces. As requested, the 14-element, self-clearing LPD antenna was modeled at the proposed ILS localizer site. Table 1 summarizes the localizer antenna model input data, including the antenna currents and phases.

Localizer course structure and clearance orbit computer runs were made for the structures identified in figure 3. The location and dimensions of all reflecting surfaces are detailed in table 2. Rectangular plates were used to simulate all of the reflecting surfaces. The perpendicular and parallel surfaces of buildings on the north side of runway 8L/26R, which would be illuminated by localizer signals, were modeled using plates represented by surfaces A through J. Fuel storage tanks were modeled with two different plate configurations. In the first configuration, each tank was modeled with a single rectangular plate the size of the tank diameter placed parallel to runway centerline, as shown in figure 4. This tank configuration provided worst-case performance results. Plates K through N represent the parallel surfaces of the fuel tanks as modeled. The second configuration was used only as a test case. Fuel storage tanks in this configuration were modeled using plates arranged around the circumference of the tank in the area that would reflect localizer signals into the localizer course, as depicted inside the first tank in figure 4. The perpendicular and parallel surfaces of the American West hangar located on the south side of the runway are represented by plates O and P.

The physical optics computation in GTD-3D model was used to model the effects of terrain on glide slope performance. The GTD computation in the model could not accommodate a triple diffraction occurrence caused by sharp terrain gradients produced by ramps, airlanes, and an expressway in front of the site. Figure 5 shows a composite of terrain profiles for simulated aircraft positions in the distance interval from 35,000 feet to 1,000 feet from runway point of intercept (RPI) in increments of 1,000 feet. A simulated ray propagating and diffracting on three edges, which would result in a triple diffraction GTD computation error, is shown in figure 6. Runway centerline terrain elevations were the only terrain data available for the first 2,000 feet in front of the site. As requested, a capture effect antenna was modeled at the proposed glide slope site. A summary of the model input data describing the capture effect antenna system at the proposed site is provided in table 3. Glide slope level and path structure computer runs were made with these data.

DATA PRESENTATION.

Modeled output results for the localizer are provided on three types of plots: (1) course structure plots, (2) clearance orbit plots, and (3) carrier plus sideband (CSB), and sideband only (SBO) antenna pattern plots. The simulated flightpaths for the course structure runs are centerline approaches starting 60,000 feet from runway threshold. The aircraft crosses the runway threshold at the threshold crossing height and continues at this altitude to a point just short of the stop end of the runway. Distances shown on the horizontal axis of the course structure plots are referenced to the approach threshold. Negative values are shown for distances between the threshold and the

localizer. Positive values apply to distances on the approach path toward the outer marker. Angular values on the horizontal axes of the CSB and SBO antenna pattern plots and on the clearance orbit plots were run with flight arcs of 35,000 feet at altitudes of 1,000 feet with respect to the localizer site.

The vertical axes of the course structure and clearance orbit plots are the model output values of CDI deflection in microamps (0.4-second time constant applied for smoothing). The vertical axes of the antenna pattern plots use a relative scale with the pattern normalized to its peak value. The range for the vertical scale of modeled course structure data plots is +40 (fly-left) to -40 (fly-right) microamps. Category I and Category II tolerance limits are shown on the course structure plots. Category III tolerance limits (not shown) extend the 5-microamp tolerance shown for Category II performance to a point on the runway 3,000 feet from threshold. The limits then increase linearly to 10 microamps at a point which is 2,000 feet from the stop end of the runway.

Modeled localizer output data are provided in figures 7 through 9. These figures provide computed performance results with the structures identified as the only reflecting source. Modeled course structure is plotted in figure 7. Computed clearance orbit results are given in figure 8. Figure 9 shows the computed CSB and SBO antenna pattern plots.

Glide slope modeling results are presented in the form of course structure and level run plots. The reference flightpath for a structure plot is the hyperbolic path formed by the intersection of a cone originating at the base of the antenna and a vertical plane located along runway centerline. In the model, this path is determined by the location of the eyepiece of the theodolite. For the data presented, the theodolite eyepiece is positioned at the X and Y coordinates of the glide slope antenna mast, but at the elevation (Z coordinate) of the RPI. Modeled results are given in figures 10 and 11. Figure 10 is the modeled path structure run result for the capture effect system installed at the proposed site. Figure 11 is the modeled level run result at the same location.

DATA ANALYSIS.

Modeled course structure results for the structures identified (figure 7) show computed CDI deflections that are well within Category I course structure tolerance limits. The computed clearance orbit plot (figure 8) indicate satisfactory linearity, course crossover, and clearance levels. Figure 9, CSB and SBO antenna patterns for the 14-element, self-clearing LPD antenna array, show smooth computed course and clearance signals on both sides of the pattern.

Glide slope modeled path structure results (figure 10) indicate that the proposed site modeled provides a path structure within Category I tolerance limits. The level run results (figure 11) show a linear crossover and near symmetrical glidepath which meets Category I tolerances.

CONCLUSIONS

Modeled results indicate that Category I localizer performance should be obtained with the 14-element, self-clearing log periodic dipole (LPD) antenna array installed at the proposed location. Computed clearance orbit results indicate satisfactory linearity, course crossover, and clearance levels. Glide slope modeled results using the physical optics computation in the GTD-3D model indicate that satisfactory category I glide slope performance should be obtained with the capture effect system installed at the proposed site.

REFERENCES

1. Chin, G., et al., Instrument Landing System Scattering, Report DOT/FAA-RD-72-137, 1972.

2. Chin, G., et al., User's Manual for ILSLOC: Simulation for Derogation Effects on the Localizer Portion of the Instrument Landing System, Report DOT/FAA-RD-73-13, 1973.

3. Chin, G., et al., Instrument Landing System Performance Prediction, Report DOT/FAA-RD-73-200, 1974.

4. Chin, G., et al., ILS Localizer Performance Study, Part I, Dallas-Fort Worth Regional Airport and Model Validation, Syracuse Hancock Airport, Report DOT/FAA-RD-72-96, 1972.

5. User's Manual for the Ohio University Geometric Theory of Diffraction Glide Slope Model, Ohio University Technical Report Number OU/AEC/ERR 47-7, February 1982.

6. United States Flight Inspection Manual, FAA Handbook OAP 8200.1, Change 32, Section 217.

TABLE 1. LOCALIZER ANTENNA MODEL INPUT DATA SUMMARY

Localizer Antenna Type:	14-Element, Self-Clearing Log Periodic Dipole
Runway 26R Length (ft):	11200.0
Distance to Runway 8L End:	800.0
Frequency (MHz)	110.1
Site Elevation (ft m.s.l.):	1107.0
Course Width (deg):	3.34

14-Element LPD Array

Ant. No.	Spacing (Wave Length)	Carrier+Sideband Amplitude	Carrier+Sideband Phase (deg)	Sideband Only Amplitude	Sideband Only Phase (deg)
7L	-4.805	0.060	0	0.138	0
6L	-4.054	0.060	0	0.379	0
5L	-3.303	0.212	0	0.276	0
4L	-2.553	0.212	0	0.586	0
3L	-1.802	0.394	0	0.414	0
2L	-1.051	0.394	0	0.759	0
1L	-0.301	1.000	0	1.000	0
1R	0.301	1.000	0	1.000	180
2R	1.051	0.394	0	0.759	180
3R	1.802	0.394	0	0.414	180
4R	2.553	0.212	0	0.586	180
5R	3.303	0.212	0	0.276	180
6R	4.054	0.060	0	0.379	180
7R	4.805	0.060	0	0.138	180

ft = feet
MHz = megahertz
m.s.l. = mean sea level
deg = degree

TABLE 2. LOCALIZER REFLECTING SURFACES DATA SUMMARY

Surface	Coordinates (ft)* X	Y	Z**	Alpha (deg)	Delta (deg)	Width (ft)	Height (ft)
A	2670	900	4	-90.0	0.0	290.00	25
B	2790	750	4	0.0	0.0	250.00	25
C	3610	690	8	-90.0	0.0	80.00	20
D	3970	650	8	0.0	0.0	700.00	20
E	5600	640	8	-90.0	0.0	200.00	40
F	5760	535	8	0.0	0.0	280.00	40
G	7190	760	13	-90.0	0.0	420.00	24
H	7340	580	13	0.0	0.0	300.00	24
I	7490	540	13	-90.0	0.0	70.00	24
J	7525	510	13	0.0	0.0	70.00	24
K	12345	976	23	0.0	0.0	50.00	50
L	12425	976	23	0.0	0.0	50.00	50
M	12505	976	23	0.0	0.0	50.00	50
N	12585	976	23	0.0	0.0	50.00	50
O	11650	-1130	23	-90.0	0.0	440.00	65
P	11930	-910	23	180.0	0.0	540.00	65

* = Midpoint of base of surface referenced to antenna.
** = Referenced to base of antenna.

TABLE 3. GLIDE SLOPE DATA SUMMARY

Capture effect Antenna	Height/Offset (ft/ft)
Lower Antenna	14.72/0.867
Middle Antenna	29.44/0.000
Upper Antenna	44.17/-1.445
Antenna	
Backset from threshold (ft)	1150.00
Offset from centerline (ft)	375.00
Elevation (ft m.s.l.)	1130.00
Average Path Angle (deg)	3.00
Path Width (deg)	0.70
Path Symmetry (percent)	47.0/53.0
A-Ratio (*)	0.292

(*) A-Ratio - Ratio of separate sideband signal amplitude to carrier sideband signal amplitude.

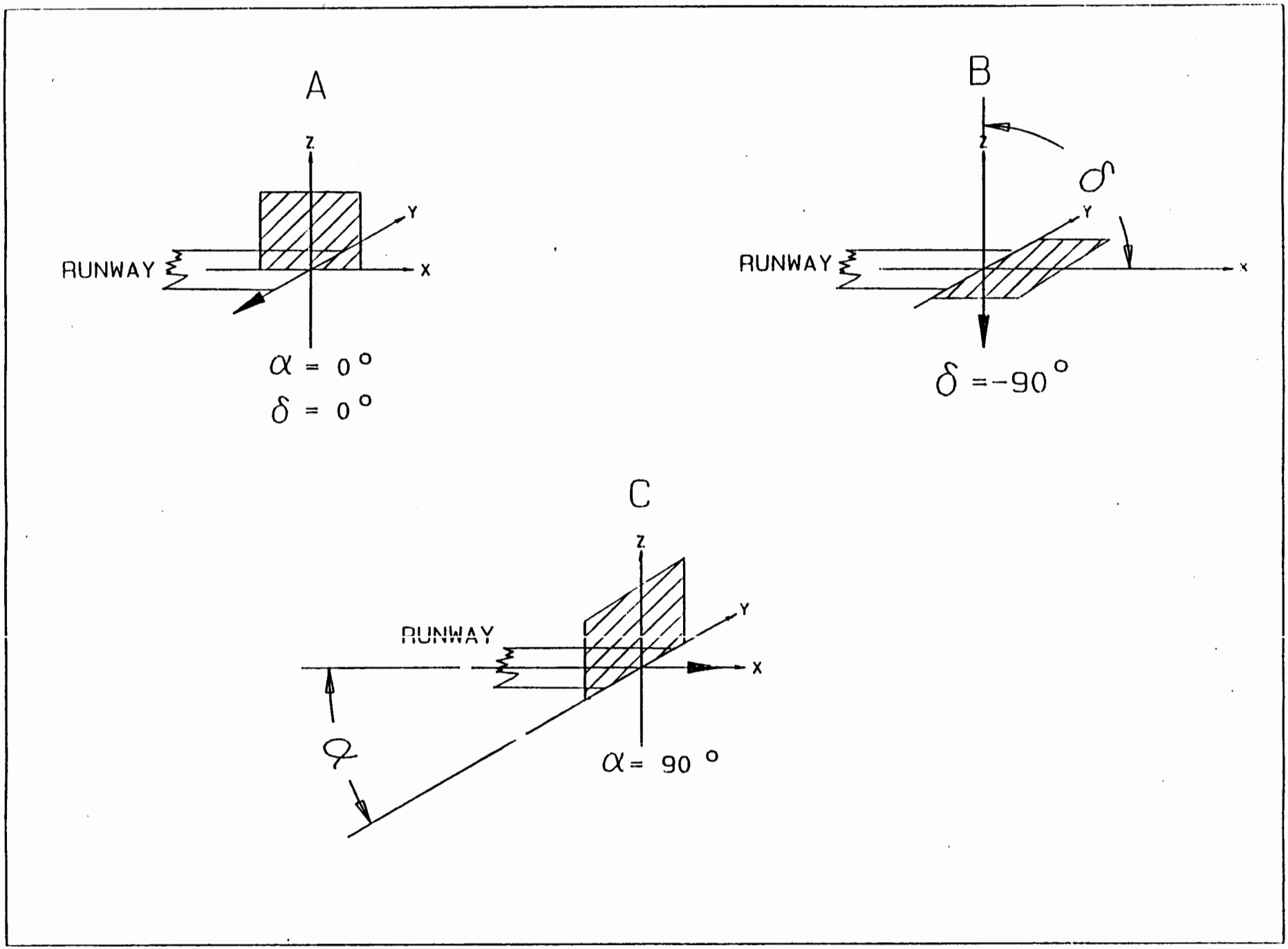

FIGURE 1. INSTRUMENT LANDING SYSTEM LOCALIZER MATH MODEL COORDINATE SYSTEMS

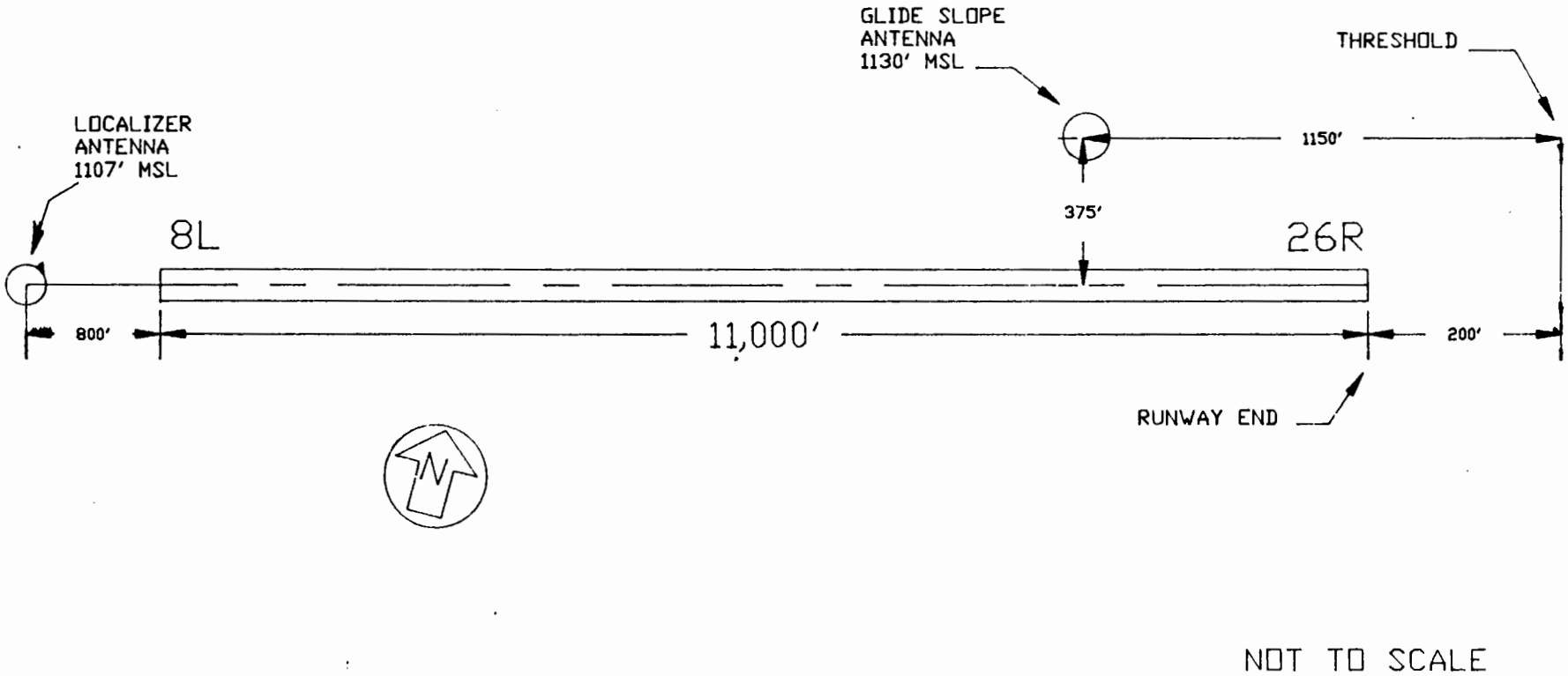

FIGURE 2. PHOENIX SKY HARBOR RUNWAY 26R, ILS MATH MODELING LAYOUT

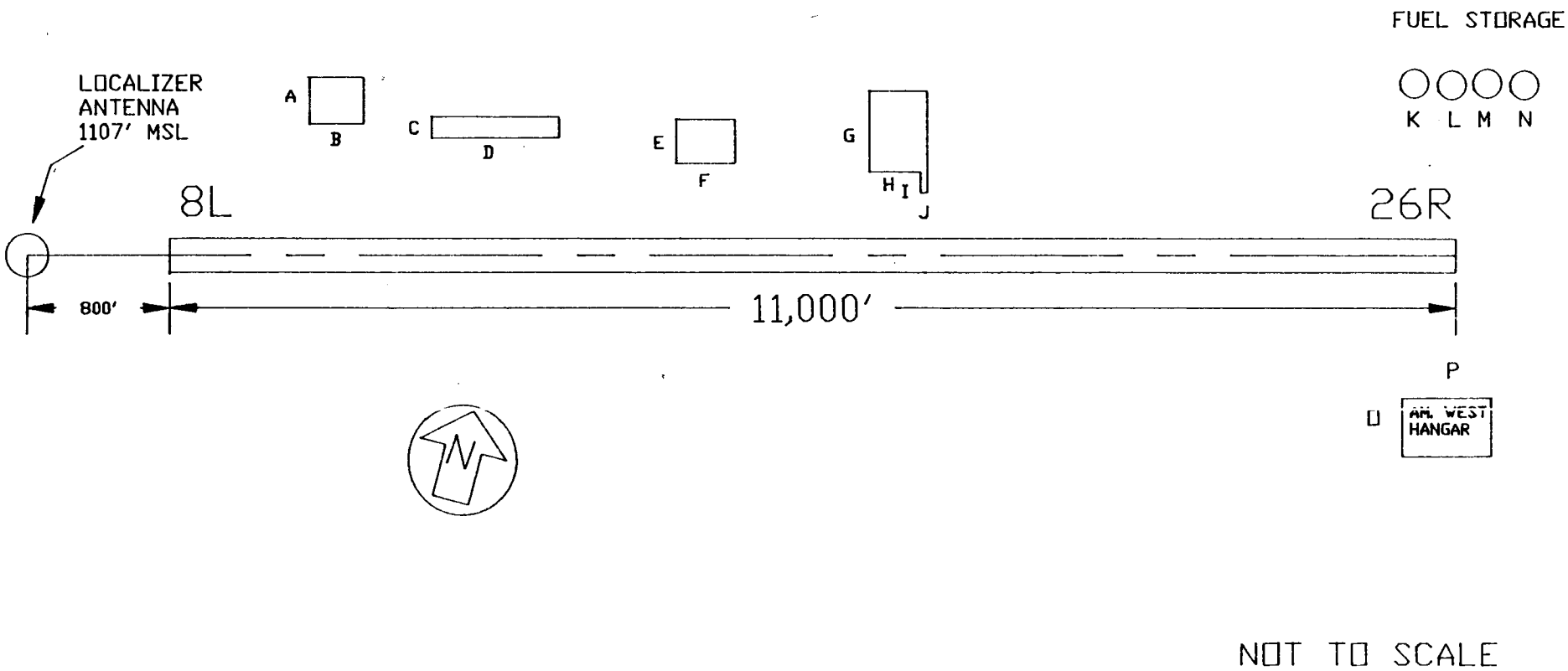

FIGURE 3. PHOENIX SKY HARBOR RUNWAY 26R, REFLECTING SURFACE DETAILS

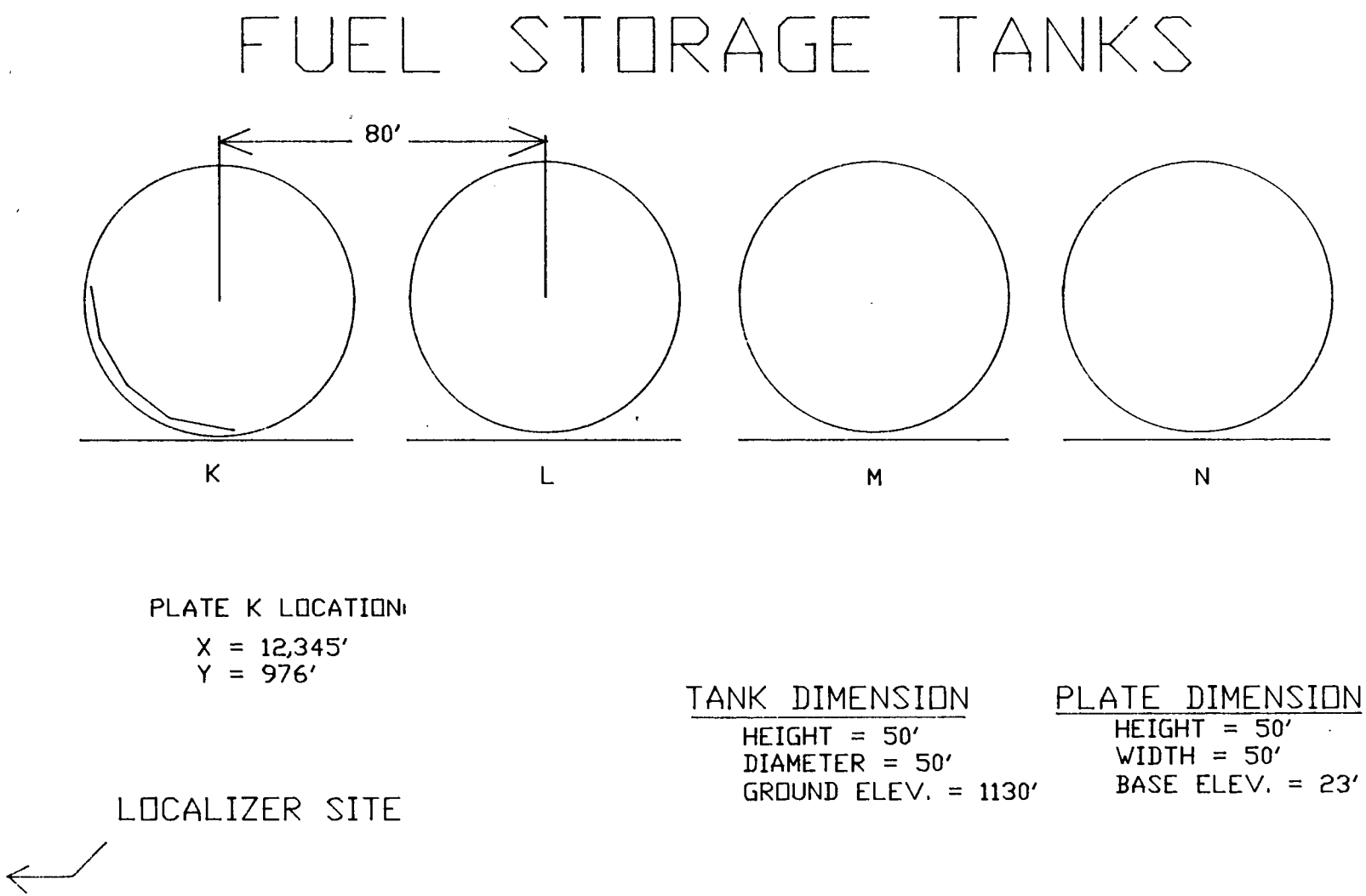

FIGURE 4. FUEL STORAGE TANKS, SCATTERER DEFINITIONS

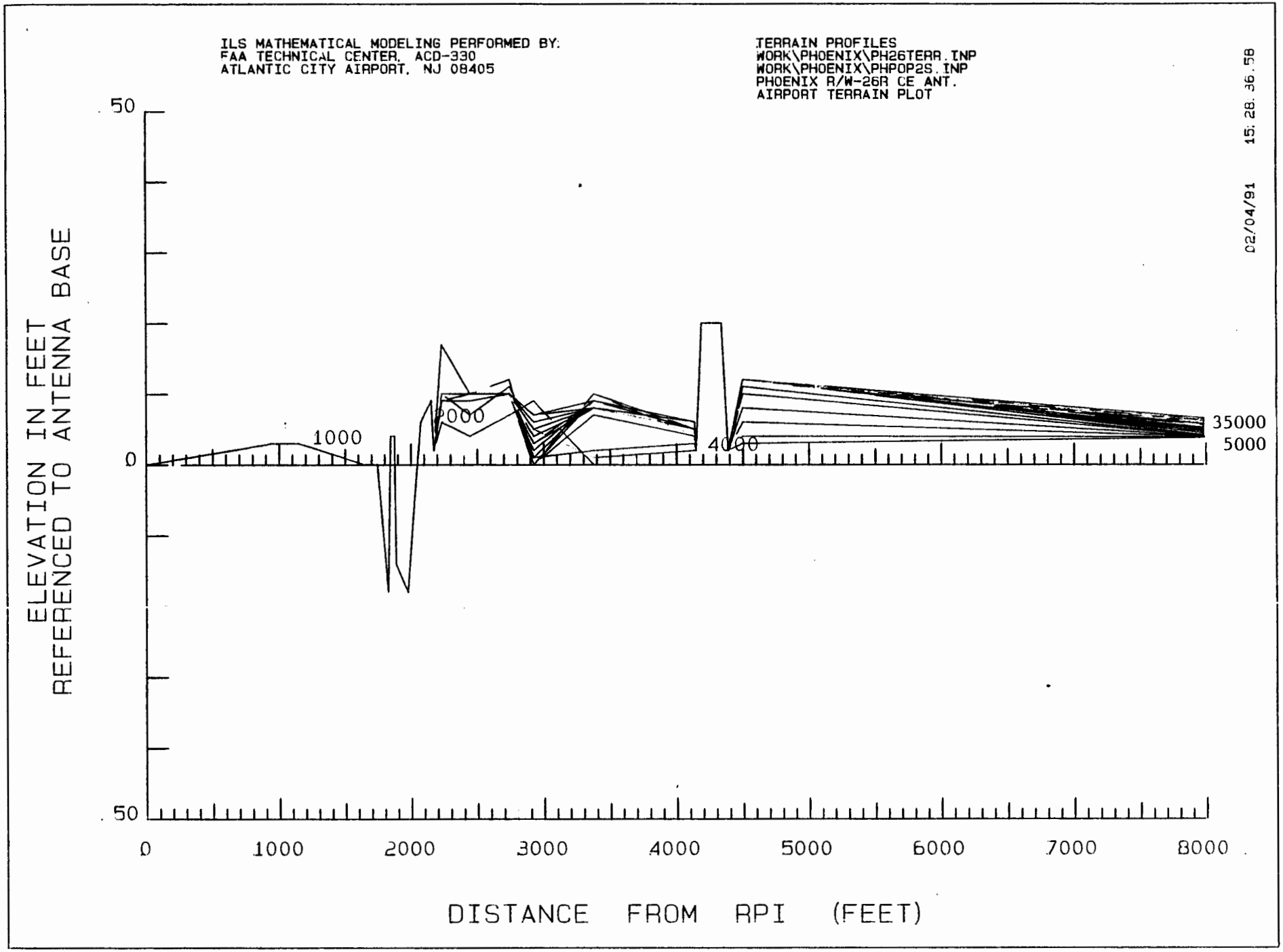

FIGURE 5. TERRAIN PROFILE IN FRONT OF THE RUNWAY 26R GLIDE SLOPE SITE

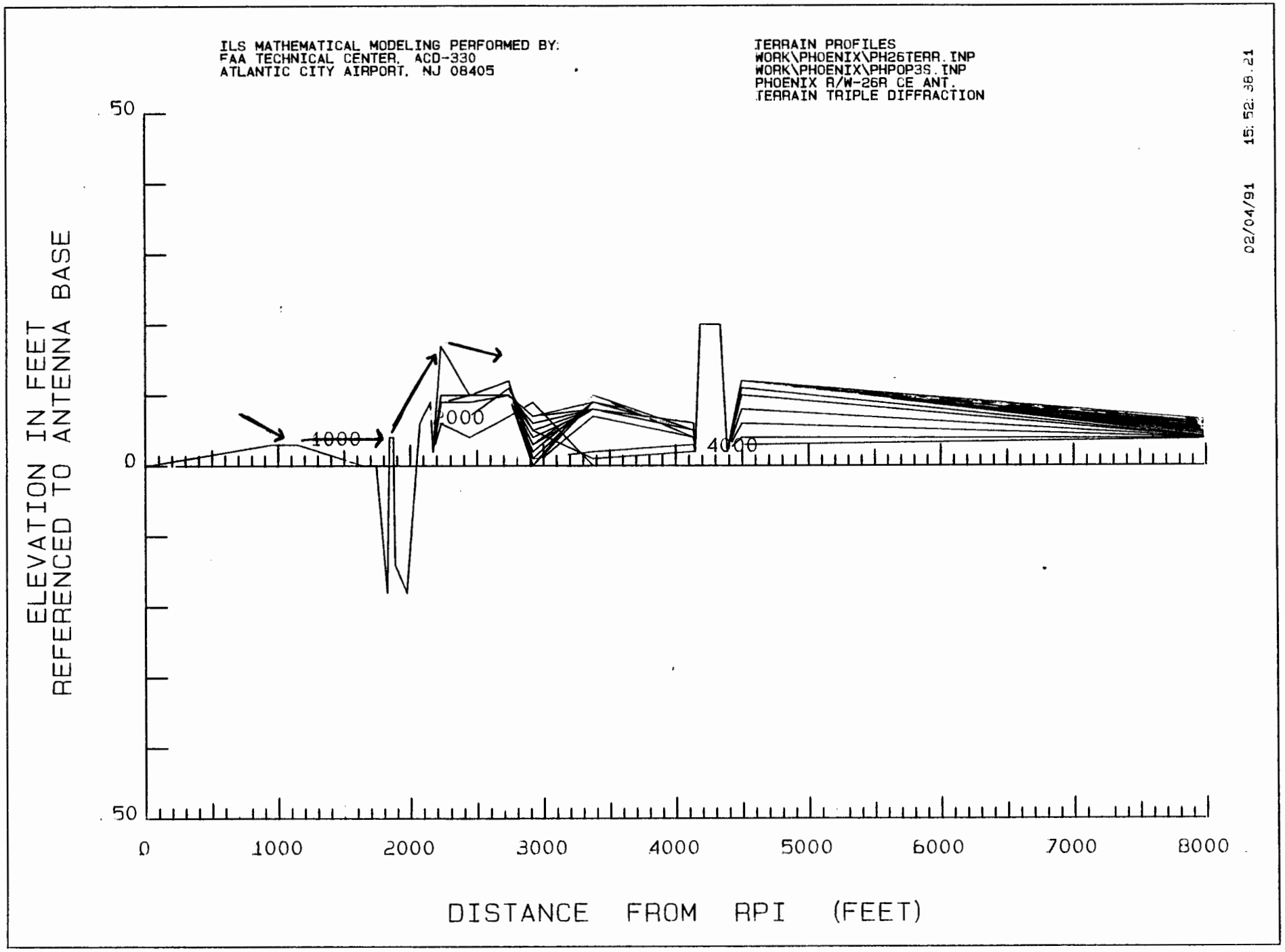

FIGURE 6. TERRAIN PROFILE DISPLAYING TRIPLE DIFFRACTION OCCURRENCE

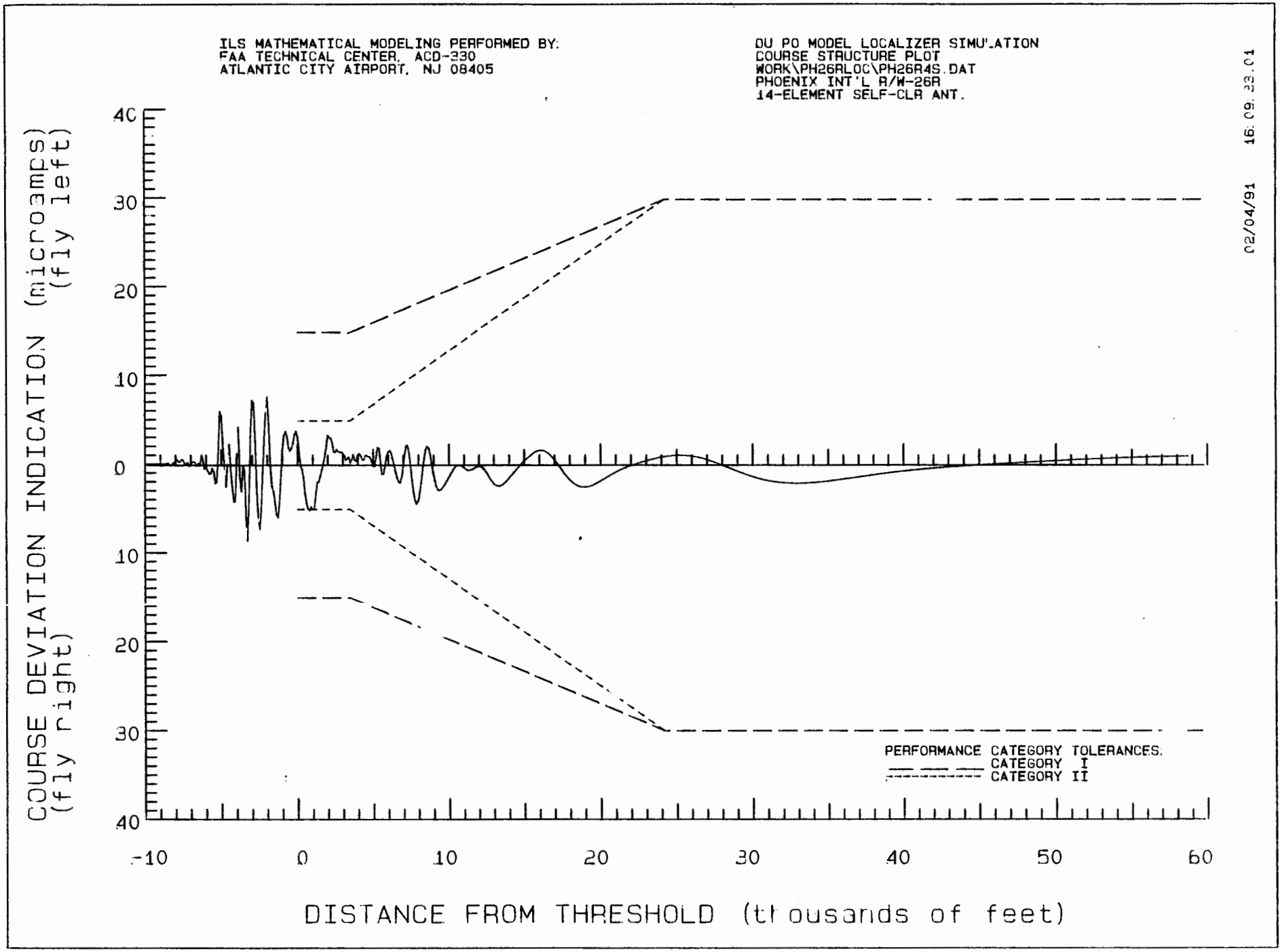

FIGURE 7. COURSE STRUCTURE, PHOENIX SKY HARBOR RUNWAY 26R LOCALIZER

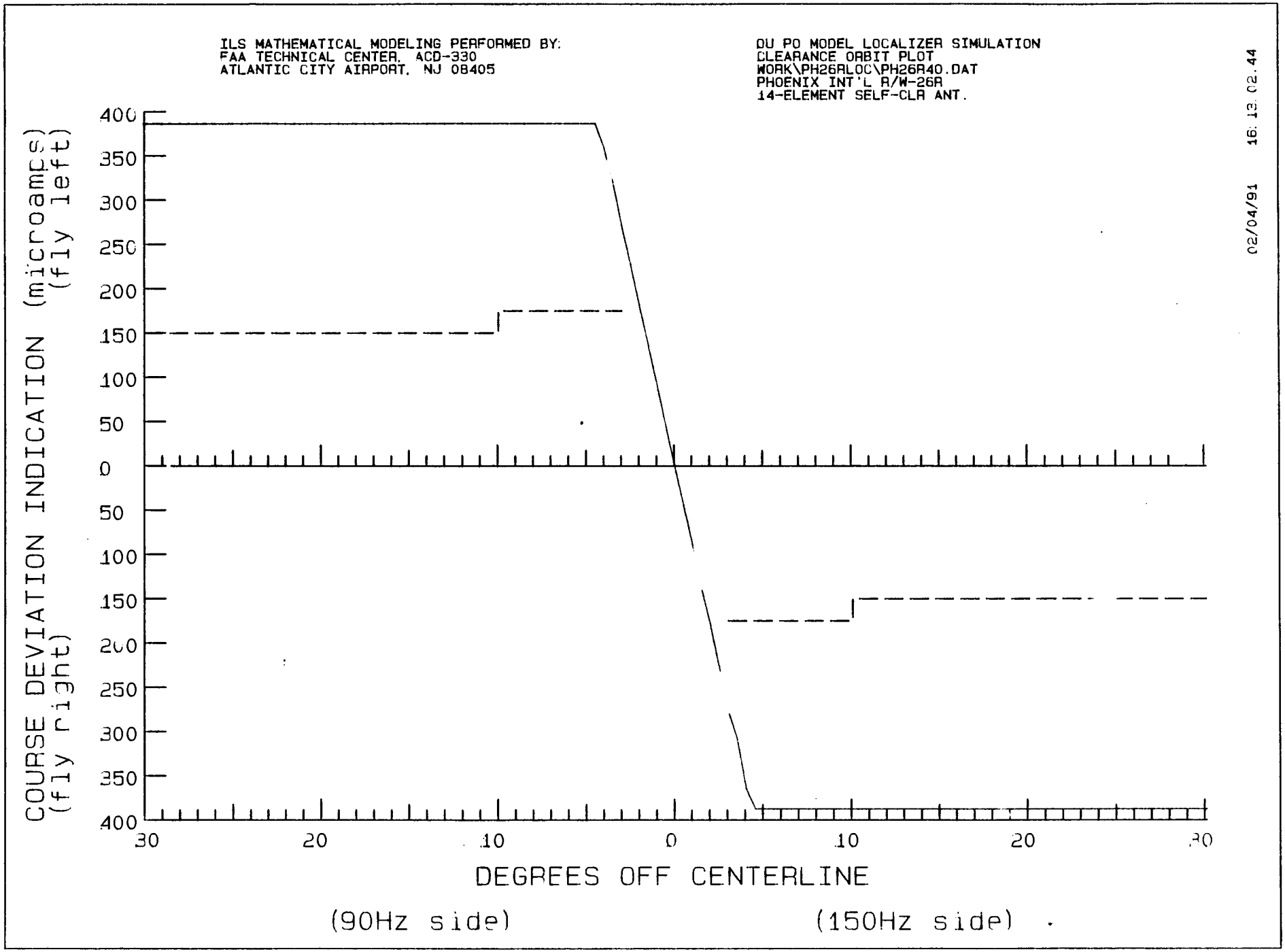

FIGURE 8. CLEARANCE ORBIT, PHOENIX SKY HARBOR RUNWAY 26R LOCALIZER

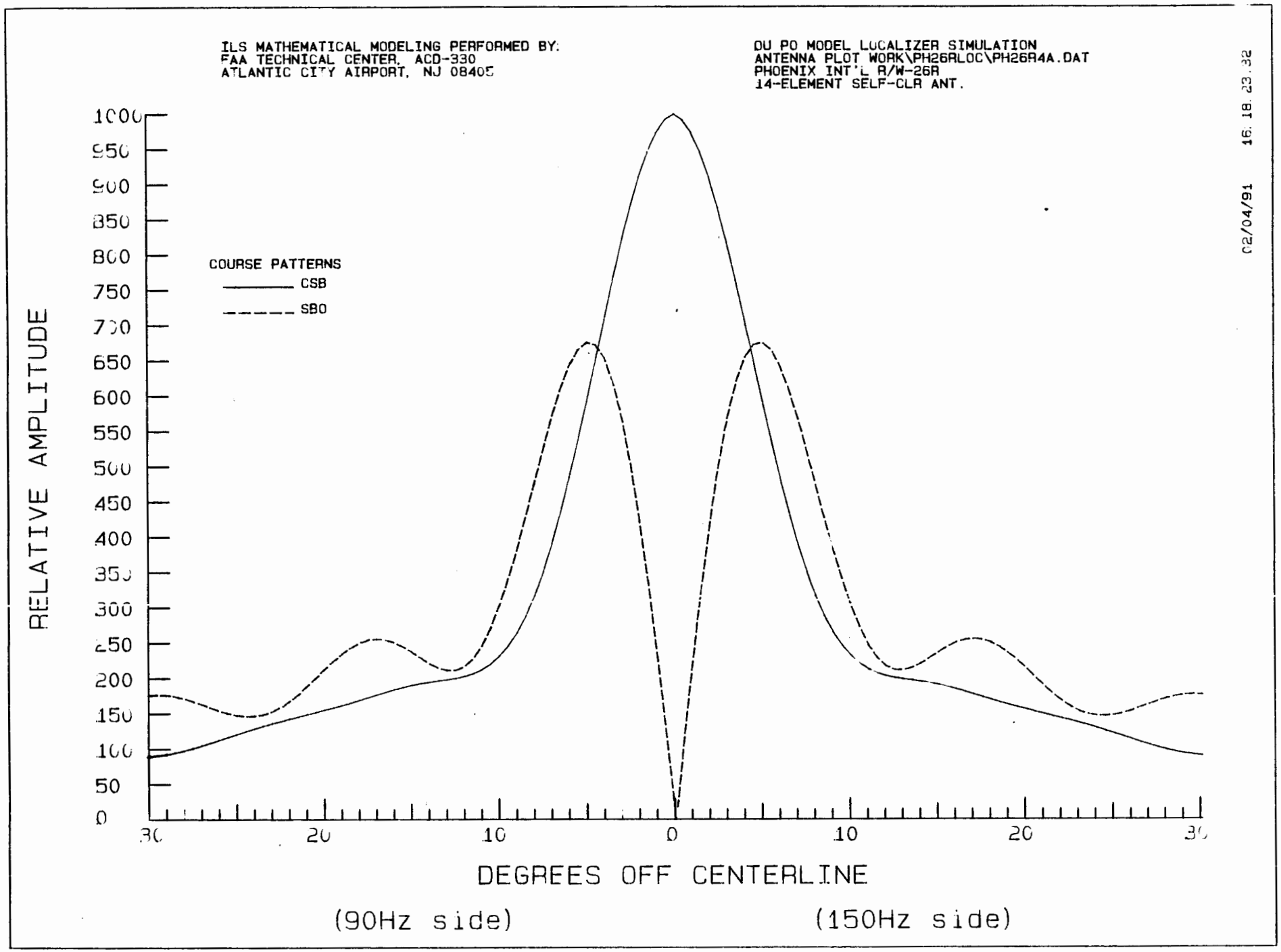

FIGURE 9. CSB AND SBO ANTENNA PATTERNS, PHOENIX SKY HARBOR RUNWAY 26R LOCALIZER

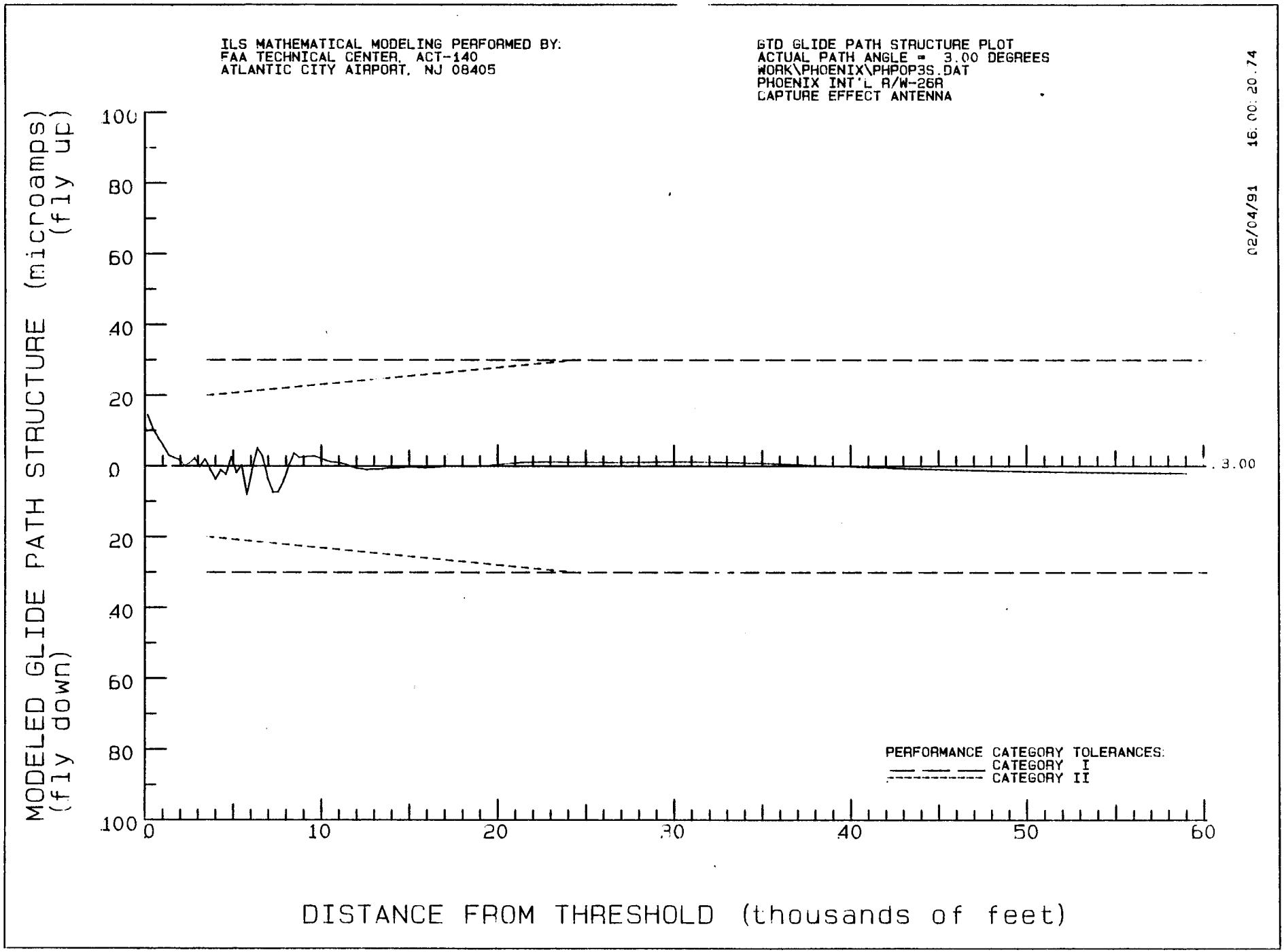

FIGURE 10. MODELED PATH STRUCTURE, PHOENIX SKY HARBOR RUNWAY 26R GLIDE SLOPE, CAPTURE EFFECT SYSTEM

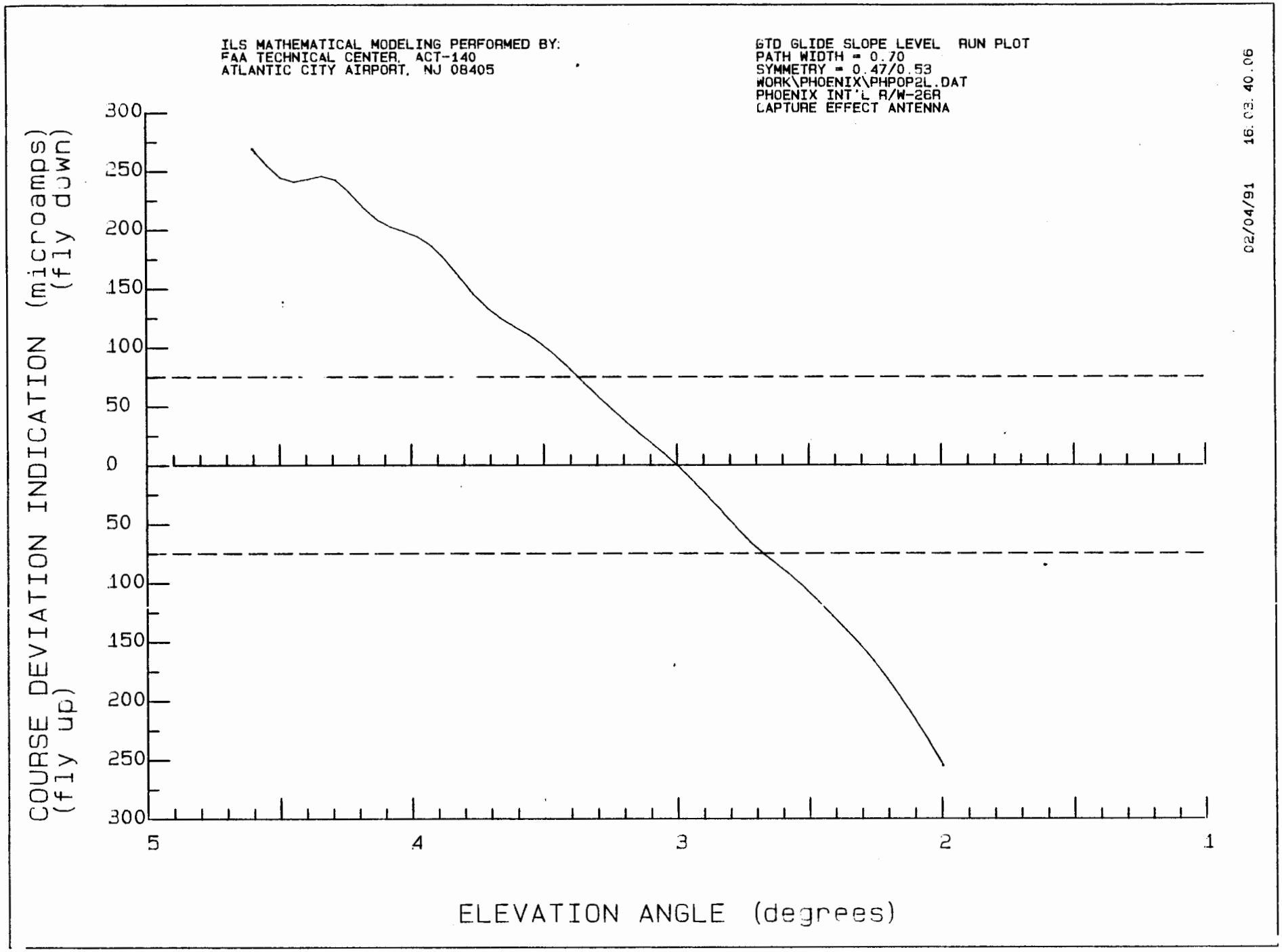

FIGURE 11. MODELED LEVEL RUN, PHOENIX SKY HARBOR RUNWAY 26R GLIDE SLOPE, CAPTURE EFFECT SYSTEM