CT
TN
91/26
COPY 1
3

technical note technical note

S-76 Rotorcraft High Intensity Radiated Fields

Test Plan

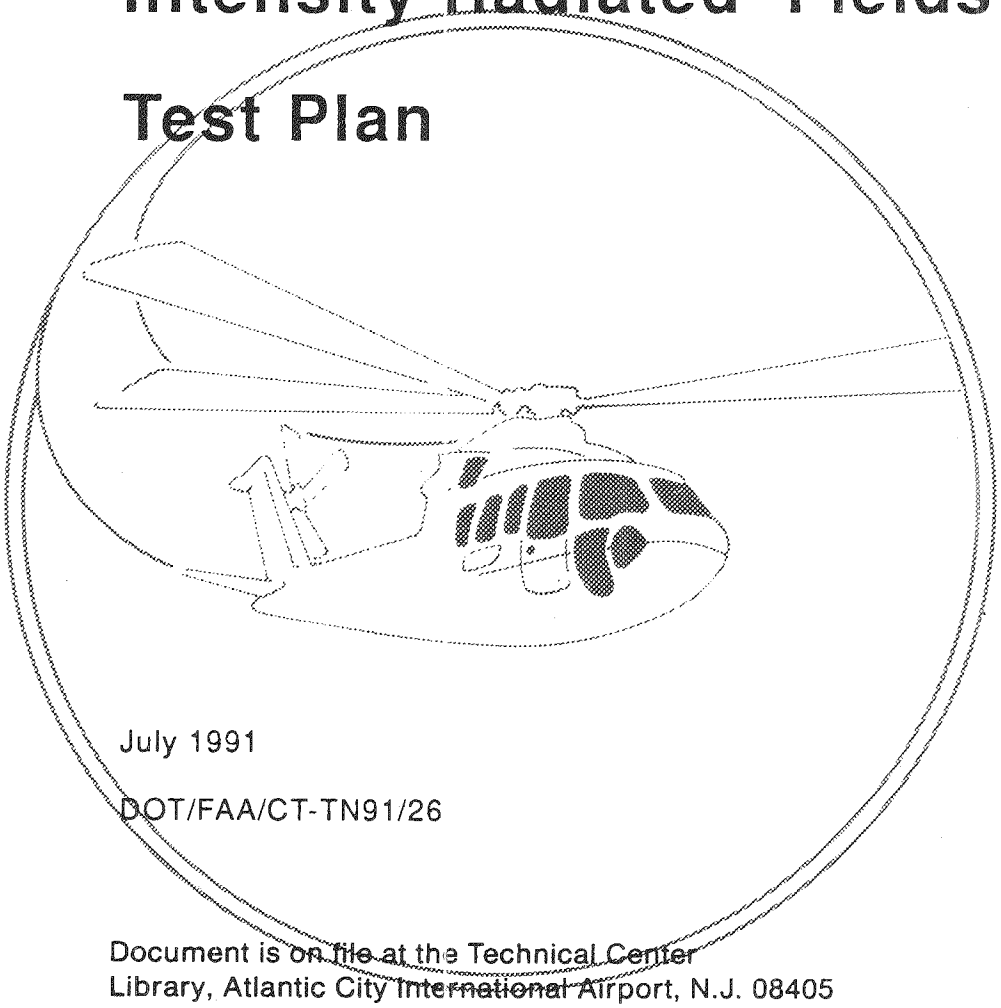

July 1991

DOT/FAA/CT-TN91/26

Document is on file at the Technical Center Library, Atlantic City International Airport, N.J. 08405

DOT/FAA
/CT-TN9
1/26
c.1

U.S. Department of Transportation
Federal Aviation Administration

Technical Center
Atlantic City International Airport, N.J. 08405

FEDERAL AVIATION ADMINISTRATION
AUG 21 1991
TECHNICAL CENTER LIBRARY
ATLANTIC CITY INTERNATIONAL, NJ 08405

FAA TECHNICAL CENTER LIBRARY
00013546

NOTICE

This document is disseminated under the sponsorship of the U. S. Department of Transportation in the interest of information exchange. The United States Government assumes no liability for the contents or use thereof.

The United States Government does not endorse products or manufacturers. Trade or manufacturers' names appear herein solely because they are considered essential to the objective of this report.

Technical Report Documentation Page

1. Report No.	2. Government Accession No.	3. Recipient's Catalog No.
DOT/FAA/CT-TN91/26		

4. Title and Subtitle	5. Report Date
S-76 ROTORCRAFT HIGH INTENSITY RADIATED FIELDS--TEST PLAN	July 1991
	6. Performing Organization Code
7. Author(s) Jerry T. Blair, Steve M. Brooks and Ken A. Barnes	8. Performing Organization Report No. SCIE-FAA-001-91
9. Performing Organization Name and Address SCIENTECH, Inc. 1690 International Way Idaho Falls, Idaho 83402	10. Work Unit No. (TRAIS)
	11. Contract or Grant No. DE-AC07-90ID12916
12. Sponsoring Agency Name and Address U.S. Department of Transportation Federal Aviation Administration Technical Center Atlantic City International Airport, NJ 08405	13. Type of Report and Period Covered Test Plan
	14. Sponsoring Agency Code ACD-230

15. Supplementary Notes

Michael Glynn, FAA Project Manager

16. Abstract

Concern over the effects of High Intensity Radiated Fields (HIRF) on civil and military aircraft has increased over the past 10 years. The increase is due to several factors which affect the safe flight of all fixed-wing and rotorcraft.

Previous flight-critical mechanical controls are being replaced by electronic computer-driven controls; manufacturers are increasing the use of composite materials in the fabrication of new aircraft; and frequency ranges and output power levels of commercial and military transmitters have significantly increased.

While much HIRF susceptibility information has been collected, the data are proprietary and have not been released.

To address the HIRF concerns and begin development of a releasable HIRF data base, the FAA Technical Center has implemented a HIRF research program. As part of that program, a HIRF test was performed on a Sikorsky S-76 Helicopter. This report addresses the purpose, approach, and initial findings of the S-76 HIRF test.

17. Key Words	18. Distribution Statement
Rotorcraft HIRF Electromagnetic	Document is available to the public through the National Technical Information Service, Springfield, Virginia 22161

19. Security Classif. (of this report)	20. Security Classif. (of this page)	21. No. of Pages	22. Price
Unclassified	Unclassified	68	

Form DOT F 1700.7 (8-72) Reproduction of completed page authorized

CONTENTS

Page

1. INTRODUCTION 1
   1.1 OVERVIEW 1
   1.2 HIRF CONCERNS 1
   1.3 S-76 HIRF TEST SUMMARY 2

2. PURPOSE 2
   2.1 OVERVIEW 2
   2.2 TEST SCOPE 2
   2.3 TEST DESCRIPTIONS 3
      2.3.1 SCAL 4
      2.3.2 LLSC Cable Current and E-Field 6
      2.3.3 Fly-By Tests 9

3. S-76 HIRF TEST EQUIPMENT DESCRIPTION 16

4. TEST METHODOLOGY 24
   4.1 FAA TECHNICAL CENTER, ATLANTIC CITY INTERNATIONAL AIRPORT, NJ, TEST AREA DESCRIPTION 24
   4.2 TEST DESCRIPTIONS 24
      4.2.1 E-Field Measurements 24
      4.2.2 SCAL Tests 24
      4.2.3 LLSC Tests 24
      4.2.4 Fly-By Tests 25
   4.3 DATA PROCESSING 25
   4.4 TEST ARTICLE ANALYSIS 25
      4.2.1 Test Article 25
      4.2.2 Test Article Resonance Analysis 25
   4.3 DATA ACQUISITION AND PROCESSING SYSTEM 26
      4.3.1 Overview 26
      4.3.2 Algorithms 26
      4.3.3 Data Acquisition Presentation 27

APPENDICES

A LIST OF DELIVERABLES

B S-76 HIRF TEST SCHEDULE

C TEST DEFINITION MATRICES

D FAA TRANSMITTER SITE DESCRIPTION AND OPERATIONAL CHARACTERISTICS

Page

E OTH-B RADAR SITE DESCRIPTION AND OPERATIONAL CHARACTERISTICS

F PAVE PAWS RADAR SITE DESCRIPTION AND OPERATIONAL CHARACTERISTICS

G SIKORSKY 76 MAINTENANCE MANUAL SA 4047-76-2 CHAPTER 6

H ANSI C95.1 1982 STANDARD

FIGURES

1. S-76 HIRF Test Layout 4

2. SCAL Background Noise Measurements Receive Locations 5

3. SCAL E-Field Measurements Transmit and Receive Locations 6

4. Current Monitor Probe Configuration 7

5. LLSC Cable Current Transmit and Receive Locations 8

6. E-Field Equipment Configuration 8

7. LLSC E-Field Test Transmit and Receive Locations 9

8. OTH-B Radars, Moscow, Maine 11

9. PAVE PAWS 15

10. Block Diagram of the Transmit/Control Node 17

11. Block Diagram of the Receive Node - Ground Test 18

12. Block Diagram of the Receive Node - Fly-By Test 19

13. Transmit Switch Wiring 20

14. Receive Switch Wiring 21

15. Data Acquisition System Display 28

Page

TABLES

1. Transmit and Receive Location Combinations 4
2. Antennae Effective Radiated Powers 6
3. OTH-B E-Field Levels Analysis 13
4. PAVE PAWS E-Field Levels Analysis 14
5. Frequency Band Settings 22
6. List of Equipment 22
7. Anticipated Aircraft Resonances 25

ACRONYMS

494	Tektronix 494 Spectrum Analyzer
ASR	Air Surveillance Radar
COTR	Contract Organization Technical Representative
dB	DeciBels
E-Fields	Electromagnetic Fields
EDAPS	Electronic Data Acquisition and Processing System
EDAPSCP	Electronic Data Acquisition and Processing System Central Processor
EFIS	Electronic Flight Instrument System
ERP	Effected Radiated Power
FAA	Federal Aviation Administration
FADEC	Full Authority Digital Electronic Control
GPIB	General Purpose Interface Buss
HIRF	High Intensity Radiated Fields
ICOM	Manufacturer's Nomenclature for AH-7000 25-1300 MHz Antenna
LLSC	Low-Level Swept Coupling
MTCB	Mobile Transmitter/Control Building
OTH-B	Over the Horizon - Backscatter
R	Receive
RF	Radiated Frequency
S-76	Sikorsky 76 Helicopter
SAE-AE4R	Society of Automotive Engineers AE4R
SCAL	Site Calibration
SCIENTECH	SCIENTECH, Inc.
T	Transmit
V/m	Volts/meter
W	Watts

S-76
HIGH INTENSITY RADIATED FIELDS TEST PLAN

1. INTRODUCTION

1.1 OVERVIEW

The Federal Aviation Administration (FAA), Technical Center, with the assistance of the Society of Automotive Engineers AE4R (SAE-AE4R) Committee, has been working to:

- define the current and anticipated future electromagnetic environment resulting from the proliferation of new and more powerful ground, airborne, and shipborne emitters;

- establish adequate and effective requirements for aircraft designs ensuring airworthiness/certification and flight safety issues/concerns regarding susceptibility to High Intensity Radiated Fields (HIRF) are addressed; and

- develop recommendations of paths to certification for new and modified aircraft.

To further support their efforts, the FAA Technical Center has contracted with SCIENTECH, Inc. (SCIENTECH) to perform HIRF tests on the Sikorsky 76 Helicopter (S-76). The tests are intended to measure the on-board coupled electromagnetic fields (E-Fields) and induced cable currents as a result of irradiating the aircraft with low-level electromagnetic energy. Additionally, live fly-bys of active emitters will be performed to collect on-board E-Field measurements. The results of the HIRF tests will be used to determine the S-76's ability to attenuate external E-Fields and evaluate expected full-threat (i.e., extrapolation of low-level irradiation to full-threat) induced cable currents. Ultimately, the results from, and methodology used during, the conduct of the S-76 HIRF Tests will be evaluated, in conjunction with other test methodologies identified in the SAE-AE4R Committee's Users Manual, to determine the adequacy and potential need for modification to the current HIRF Test requirements.

1.2 HIRF CONCERNS

HIRF-related electrical disturbances are of increasing concern as a flight safety issue because of the substantial growth in the numbers of national and international high power transmitters, growing flight control and avionics systems complexity (resulting in potential sensitivity and susceptibility to HIRF), and the increasing use of composite materials (typically providing less E-Field attenuation) in modern aircraft design. To ensure continued flight safety, it is apparent that new aircraft designs must be evaluated for susceptibility to the

effects of HIRF. However, it is also apparent that existing test requirements and recommended approaches to HIRF testing must be evaluated and potentially modified to ensure airworthiness/certification flight safety issues and concerns are addressed in the most cost-effective way possible.

1.3 S-76 HIRF TEST SUMMARY

To assist the FAA in addressing the above concerns, SCIENTECH will conduct Low-Level Swept Coupling (LLSC) tests on the S-76 by transmitting non-threatening power levels of radio frequency (RF) energy from antennae positioned in the near vicinity of the aircraft and oriented to illuminate areas containing various electronic and potentially susceptible components. In addition, SCIENTECH will monitor and record on-board E-Field levels during fly-bys of active emitters at the FAA Technical Center, the Cape Cod, Massachusetts PAVE PAW, and the Moscow, Maine, Over the Horizon-Backscatter (OTH-B) radar site. Results of the S-76 HIRF tests will be documented and delivered to the FAA in a final report.

2. PURPOSE

2.1 OVERVIEW

This Test Plan describes the specific tests SCIENTECH will perform on the S-76. Specifically, this document will provide and define the overall Test scope, description, definition, methodology, system, deliverables (Appendix A), and schedule (Appendix B).

2.2 TEST SCOPE

The scope of the SCIENTECH S-76 HIRF test effort described in this Test Plan includes the following elements.

- Test Preparation: Design, develop, acquire, and integrate the S-76 HIRF Test System.
- Package and transport the S-76 HIRF Test System from Idaho Falls, ID, to the Atlantic City FAA Technical Center and, upon completion of the HIRF test, package and redeploy the Test System to Idaho Falls.
- Conduct LLSC cable current measurements from 10 kHz to 1 GHz on five S-76 electronic components.
- Conduct E-Field measurements from 10 kHz to 18 GHz in five receive areas of the S-76.
- Conduct site calibration (SCAL) E-Field tests from 10 kHz to 18 GHz.
- Conduct on-board E-Field measurements and oversee video taping of cockpit electronic instruments while performing a fly-by of the FAA's conical antenna transmitting at to-be-determined E-Field levels.
- Conduct on-board E-Field measurements and oversee video taping of cockpit electronic instruments while performing a fly-by of the the Cape Cod, Massachusetts PAVE PAW and Moscow, Maine, OTH-B radar site transmitting at to-be-determined E-Field levels.
- Prepare and deliver a final report on the S-76 HIRF test.

2.3 TEST DESCRIPTIONS

In general, the S-76 HIRF ground tests will be performed by transmitting low levels of electromagnetic energy over the range of 10 kHz to 18 GHz while measuring the resulting on-board E-Field and induced cable current levels (cable current levels will be measured up to 1 GHz). Both cable current measurements will be made in various areas of the S-76 while irradiating from multiple locations. The specific receive (R) and transmit (T) locations are identified in Figure 1. Table 1 defines the various transmit and receive location

combinations from which tests will be performed. Additionally, on-board measurements will be made while actually flying through E-Fields generated by active ground emitters. The S-76 HIRF tests will be comprised of three major segments:

- SCAL (Section 2.3.1);
- LLSC cable current and E-Field (Section 2.3.2); and
- Fly-by (Section 2.3.3).

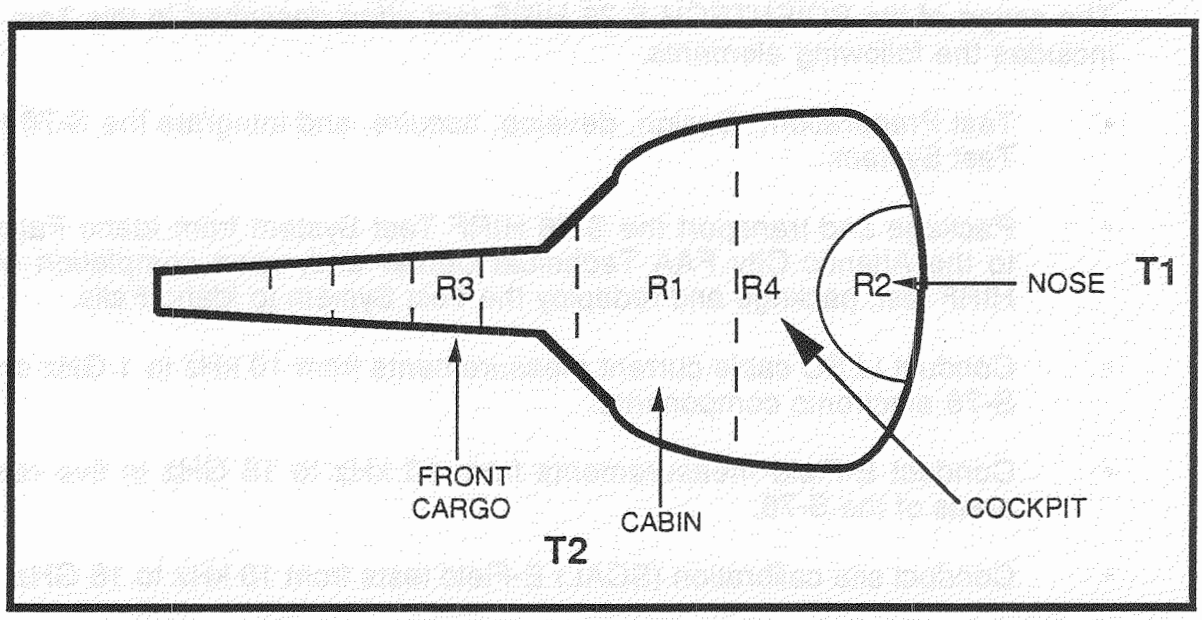

Figure 1. S-76 HIRF Test Layout

Table 1. Transmit and Receive Location Combinations

	T1	T2
R1	X	X
R2		X
R3	X	X
R4	X	X

2.3.1 SCAL

The SCAL segment of the HIRF ground tests will be performed prior to the placement of the S-76 in the test area. SCAL will consist of two phases: background noise and transmitted E-Field measurements. Appendix C provides specific definition of the SCAL measurements to be performed.

The background noise measurements will be made to determine ambient and equipment noise levels in the absence of intentional transmissions from the test system's emitters. The data obtained from these tests will ultimately be used during the data analysis/reduction portion of the test report development to calculate actual measured field strength levels. Essentially, the background and equipment noise levels will be subtracted from the measured levels providing actual E-Field and cable current levels. As indicated in Figure 2 the background noise measurements will be made in locations corresponding to two of the aircraft areas in which E-Field and cable current sensors will be positioned for the LLSC tests. While the actual E-Field and cable current measurements will be performed in four receive areas throughout the aircraft, SCAL measurements will be made only at one receive location. The reduced number of SCAL receive locations is possible due to the close proximity of the receive locations and consideration of the E-Field levels are a function of 1/R where R is the distance between the transmit and receive locations.

The SCAL E-Field measurements will be made to determine the incident E-Field intensities at locations corresponding to the aircraft's skin in close proximity to the receive locations. Figure 3 identifies the various transmit and receive locations from which the SCAL E-Field measurements will be performed.

The effected radiated power (ERP) from each transmit antenna is dependent on the frequency, input power, and efficiency of the antenna. Table 2 identifies the ERP gain of each antenna to be used. The resulting E-Field levels at the aircraft will range from 1-3 Volts/meter (V/m) depending on the frequency.

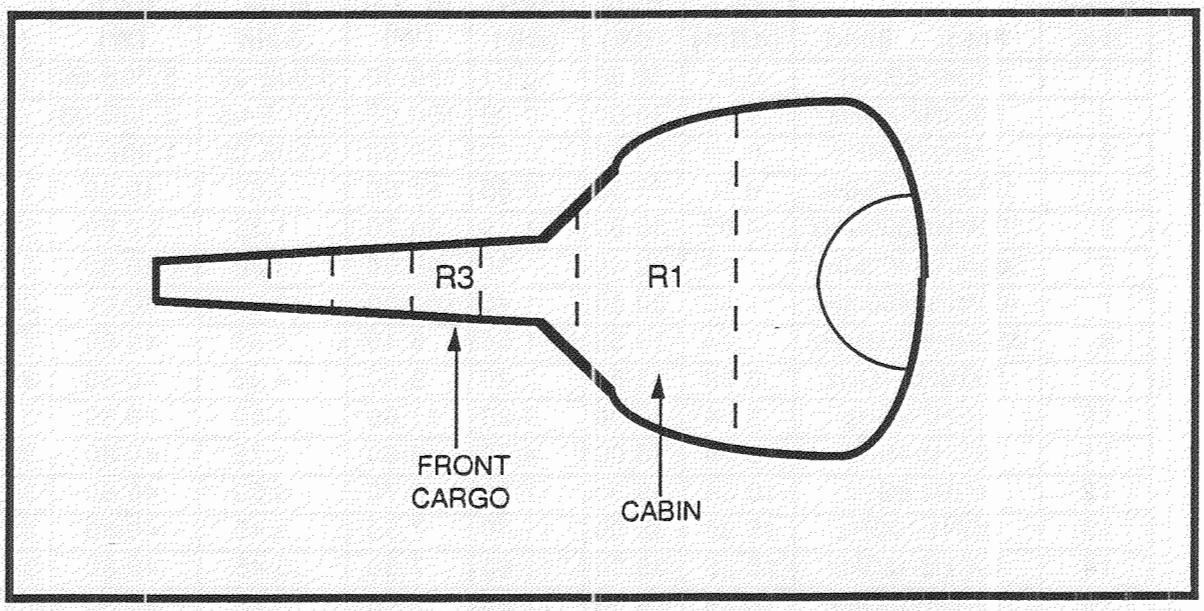

Figure 2. SCAL Background Noise Measurements Receive Locations

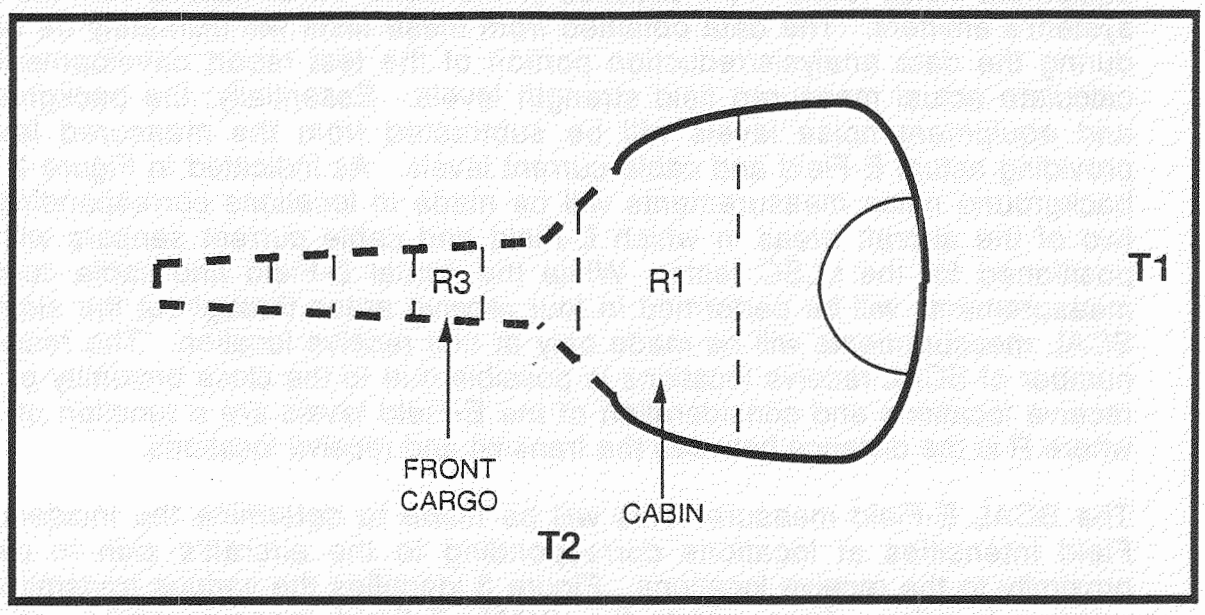

Figure 3. SCAL E-Field Measurements Transmit and Receive Locations

Table 2. Antennae Effective Radiated Powers

Band No.	Freq. - Band	Pi Amp (dBm)	Amp Gain (dB)	Cable Loss (25ft) (dB)	Pi Ant (W)	Ave. Num. Gain	ERP (W)	r (m)	E (V/m)
1	10kHz-500kHz	0.01	50.00	0.01	100.00	5.00E-08	5.00E-06	0.01	1.00
2	500kHz-2MHz	0.09	50.00	0.09	100.00	2.50E-05	2.50E-03	0.27	1.00
3	2MHz-12MHz	0.22	50.00	0.22	100.00	1.00E-03	1.00E-01	1.73	1.00
4	12MHz-100MHz	-6.50	55.00	0.65	61.00	0.67	40.80	35	1.00
5	100MHz-300MHz	-4.03	50.00	1.10	30.70	1.33	20.80	35	1.00
6	300MHz-400MHz	1.08	50.00	1.30	95.00	0.43	20.80	35	1.00
7	400MHz-450MHz	1.40	50.00	1.40	100.00	0.30	30.00	30	1.00
8	450MHz-500MHz	7.24	33.50	1.50	8.40	4.86	40.80	35	1.00
9	500MHz-1GHz	8.52	33.50	2.20	9.60	4.25	40.80	35	1.00
10	1GHz-2GHz	8.84	35.00	3.20	11.60	3.50	40.80	35	1.00
11	2GHz-4GHz	9.04	35.00	4.70	8.60	4.75	40.80	35	1.00
12	4GHz-8GHz	10.36	35.00	7.10	6.70	6.09	40.80	35	1.00
13	8GHz-10GHz	15.35	35.00	11.60	7.50	5.45	40.80	35	1.00
14	10GHz-12GHz	15.35	35.00	11.60	7.50	5.45	40.80	35	1.00
15	12GHz-14GHz	15.35	35.00	11.60	7.50	5.45	40.80	35	1.00
16	14GHz-16GHz	15.35	35.00	11.60	7.50	5.45	40.80	35	1.00
17	16GHz-18GHz	15.35	35.00	11.60	7.50	5.45	40.80	35	1.00

2.3.2 LLSC Cable Current and E-Field

The LLSC cable current and E-Field segment of the HIRF ground tests will be performed with the S-76 in the test area. Measurements will be made with all aircraft power removed to provide a comparison between the on-board E-Field levels with and without power to the aircraft systems. The following describes specific details of the LLSC cable current and E-Field measurements. In all cases, the S-76 irradiation will be performed at low levels (1-3 V/m) ensuring no equipment damage.

The LLSC cable current measurements will be performed by attaching current monitor probes to the various equipment cable bundles as indicated in Figure 4. During the aircraft irradiation, the induced current level will be monitored on spectrum analyzers and transferred to a computer for follow-on analysis. The LLSC cable current measurements will be made over the range of 10 kHz to 1 GHz from transmit and receive locations as indicated in Figure 5. The LLSC cable current and E-Field measurement will be made in parallel over the range of 10 kHz to 1 GHz. Appendix C identifies the specific parameters associated with the LLSC tests.

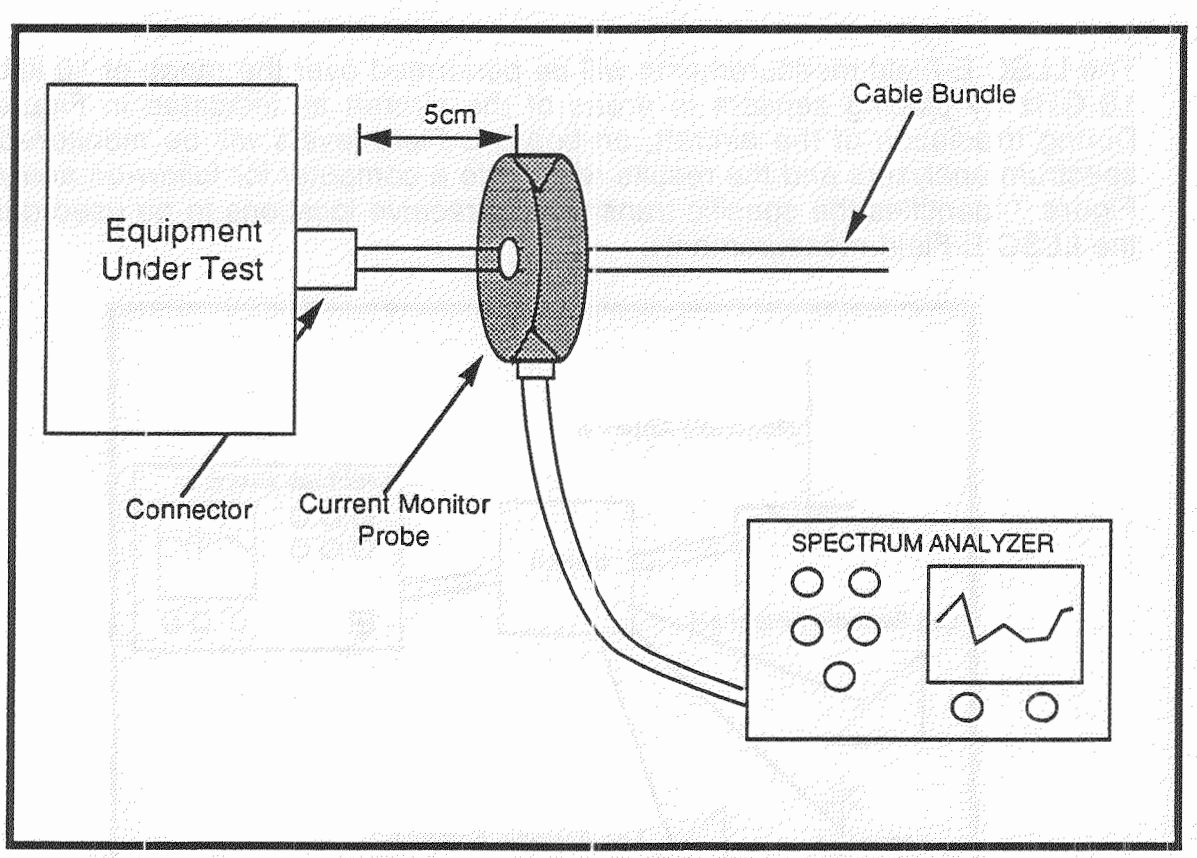

Figure 4. Current Monitor Probe Configuration

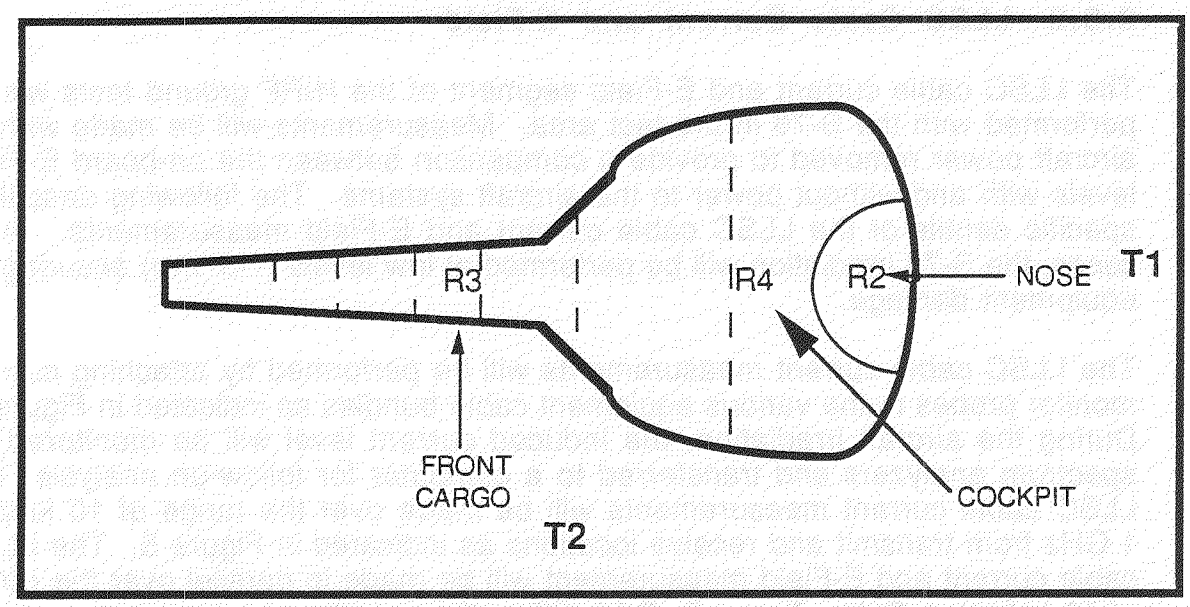

Figure 5. LLSC Cable Current Transmit and Receive Locations

The LLSC E-Field measurements will be performed over the range of 10 kHz to 18 GHz by placing sensors in areas of the aircraft as indicated in Figure 6. During irradiation of the aircraft, on-board E-Field levels will be monitored on spectrum analyzers and the results relayed to a computer for follow-on analysis. Figure 7 identifies the specific transmit and receive locations to be used during the LLSC E-Field measurements.

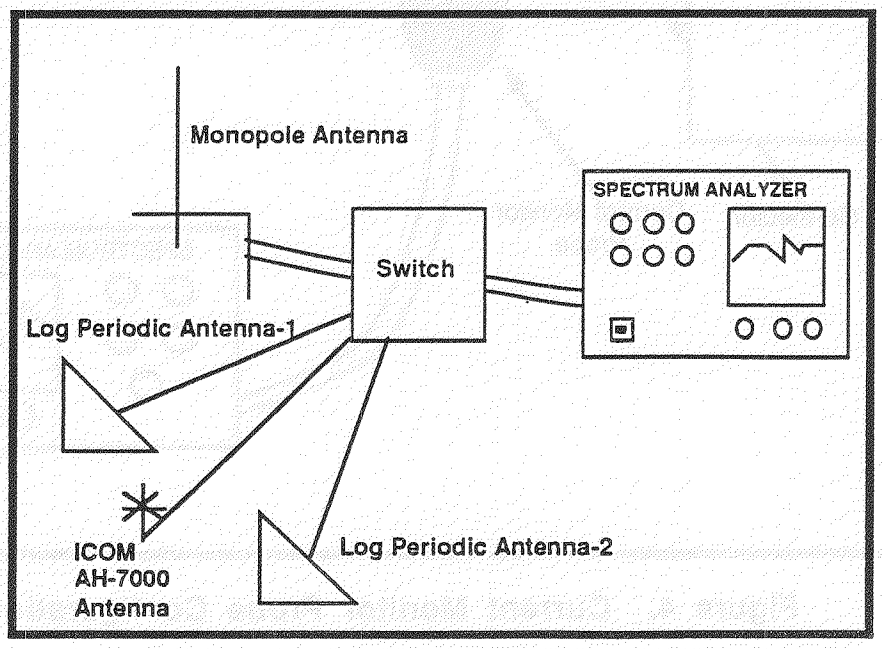

Figure 6. E-Field Equipment Configuration

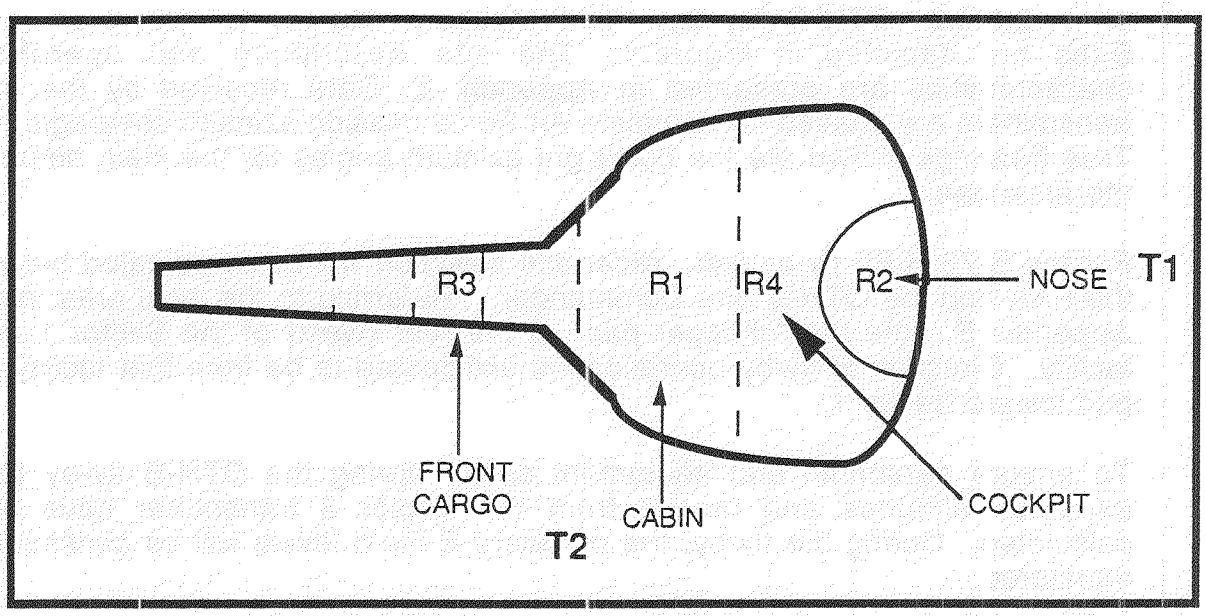

Figure 7. LLSC E-Field Test Transmit and Receive Locations

During both cable current and E-Field measurements, the receive equipment will be located in the cabin area of the S-76 with current monitor probes and E-Field sensors in the appropriate areas connected to the receive equipment via low-loss coaxial cables.

2.3.3 Fly-By Tests

The fly-by portion of the S-76 HIRF Test will be comprised of three segments. The first fly-by will be conducted at the FAA Technical Center, Atlantic City, NJ. The second segment will be performed in Moscow, Maine, at an OTH-B Radar Site. The third segment will be performed on the PAVE PAWS radar site at Otis Air Force Station, Massachusetts. In each of these segments, ambient field levels will be measured prior to exposing the S-76 to the emitters. As with SCAL background noise measurements, ambient levels will be used to correct the E-Field data to provide a more accurate description of the E-Field levels attributable to the emitters.

2.3.3.1 FAA Technical Center Fly-By The fly-by at the FAA Technical Center will include an HF transmitter in close proximity to the LLSC test site. The transmitter produces an effective radiated power of 1000 Watts (W). Additionally, a fly-over of the airport area will be performed to evaluate the HIRF effect of local Air Surveillance Radars (ASRs). In particular, the ASR-7 at the east end of the runway will be evaluated.

Appendix D presents the site description and operational characteristics of the FAA transmitter sites.

2.3.3.2 OTH-B Fly-By. The Moscow, Maine, OTH-B Transmitter Sites are depicted in Figure 8. The site description and operational characteristics are presented in Appendix E. Data received by the three transmitters are phased for complete Air Force mission azimuth coverage. The True Bearings shown are the boresight azimuth angles for the main beams of the antennae.

For the S-76 HIRF fly-by test, radar site selection will be coordinated between the FAA and the OTH-B Site Commander. Referring to the local area map in Appendix E, note the "chopper pad" at the rear (west) of the Sector 1 radar facility. Direction of fly-by operations is anticipated to be from that facility and pad toward Sector 1.

To ensure personnel and equipment safety during the OTH-B fly-by tests, expected altitudes and ranges from the Sector 3 transmitter have been calculated. During the fly-by, the on-board E-Field levels will be continuously monitored.

Given: $ERP = 100 \times 10^6$ W

$E_{V/m} = 100$ V/m

$Z = 377\ \Omega$

Using: $E_{V/m} = (P_D Z)^{1/2}$

Then: $P_D = (E_{V/m})^2 / Z = 26.52$ W/m^2

Using: $P_D = ERP / (4\pi R^2)$

Then: $R^2 = ERP / (4\pi P_D)$

Therefore: $R = [ERP / (4\pi P_D)]^{1/2}$

Then: $R = [100 \times 10^6 \text{ W} / (4\pi 26.52 \text{ W/m}^2)]^{1/2}$

$R = (100 \times 10^6 \text{ W} / 333.26)^{1/2}$

$R = 547.78$ m

≈ 548 m

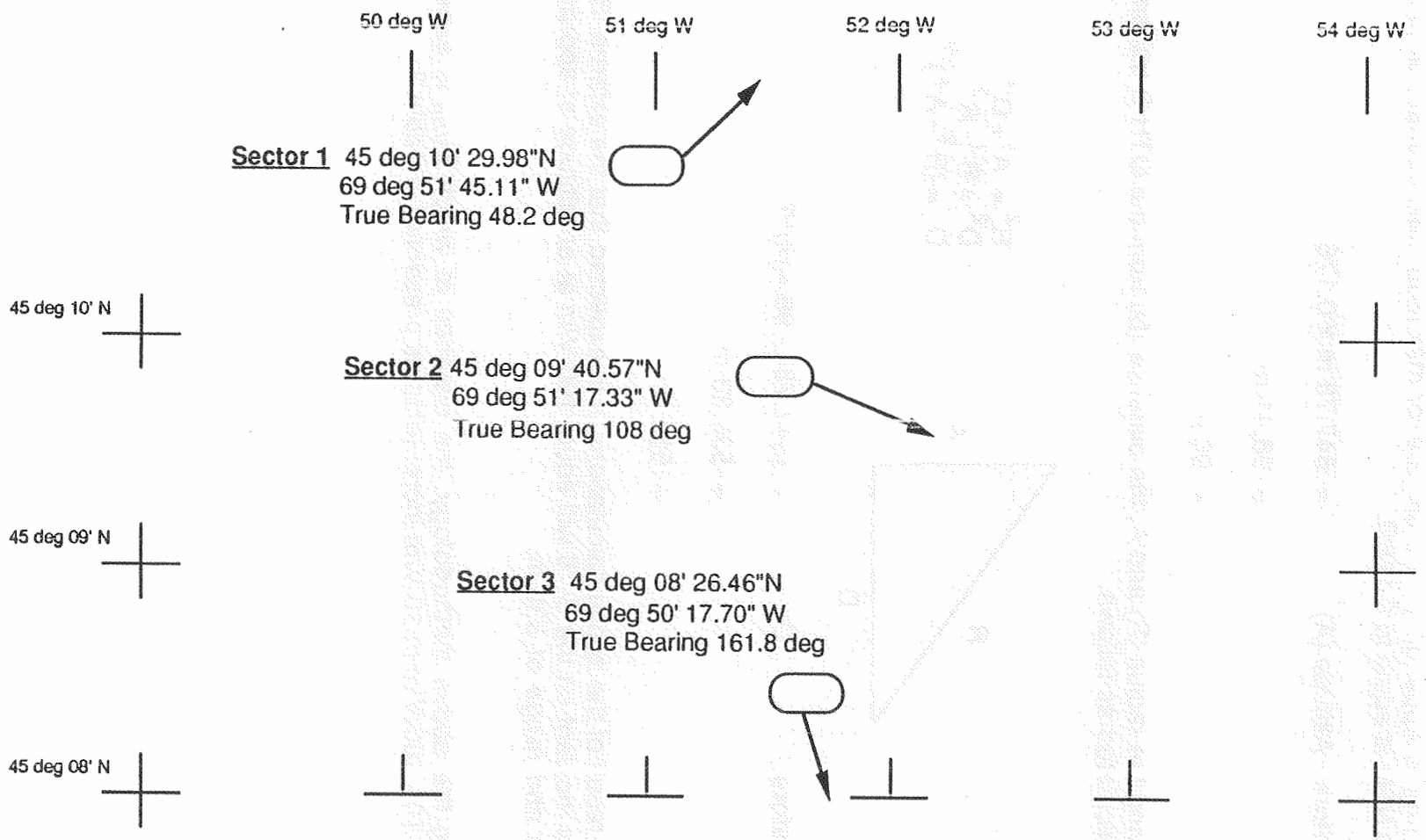

Figure 8. OTH-B Radars, Moscow, Maine

Referring to Appendix E, the altitude for maximum field intensity at 22.25 to 28.00 MHz is equal to 0.176R.

Therefore: Altitude (A) $= 547.78 \text{ m} \times 0.176$

$= 96.41 \text{ m}$

$\approx 96 \text{ m}$

Knowing the radius (R) and A, the distance (D) from the OTH-B transmitter can be calculated as follows.

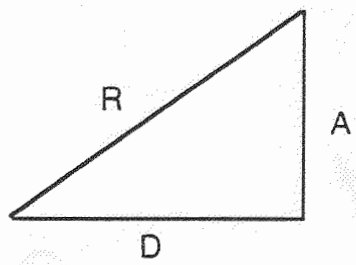

$$R^2 = A^2 + D^2$$
$$D^2 = R^2 - A^2$$
$$D = (R^2 - A^2)^{1/2}$$

Therefore: $D = (547.78^2 - 96.41^2)^{1/2}$

$= 539.23 \text{ m}$

$\approx 539 \text{ m}$

As a result of the above calculations, it is expected that the external E-Field levels incident on the S-76 will equal 100 V/m at an altitude of approximately 96 m and range of 539 m.

Using the above methodology, the distance at which $E_{V/m}$ is expected to be from 10 - 100 V/m in 10 V/m increments as presented in Table 3.

Table 3. OTH-B E-Field Levels Analysis

DESIRED E (V/m)	ERP	POWER DENSITY (W/m^2)	RADIUS FROM TRANSMITTER (m)	ALTITUDE (m)	RANGE (m)
100	1.00E+08	26.53	548	96	539
90	1.00E+08	21.49	609	107	599
80	1.00E+08	16.98	685	121	674
70	1.00E+08	13.00	783	138	770
60	1.00E+08	9.55	913	161	899
50	1.00E+08	6.63	1096	193	1079
40	1.00E+08	4.24	1370	241	1348
30	1.00E+08	2.39	1826	321	1798
20	1.00E+08	1.06	2739	482	2697
10	1.00E+08	0.27	5479	964	5393

2.3.3.3 Pave Paws Fly-By. The Otis Air Force Station, Massachusetts, PAVE PAWS radar transmitter site is shown on the Cape Cod local area map as 3 miles north of Otis Air Force Station. Site description and operational characteristics are presented in Appendix F. The radar sweeps out a volume of space varying from 2200 to 5400 ft high over an azimuth spread of 240°. The power density at a slant range of one nautical mile is 100 W/m^2. The antenna boresight is about 100° True Bearing.

As with the OTH-B radar site, the distance from the PAVE PAWS radar corresponding to a 100 V/m E-Field level is calculated (reference information provided in Figure 9 at the end of this subsection) as follows.

Given: $A = 217$ m

$D = 1686$ m

$P_D = 100\ W/m^2$

Calculate ERP: $ERP = 4P_D\pi D^2$

$= 1686^2 \times 100 \times 4 \times \pi$

$\approx 3572 \times 10^6$ W

If $E_{V/m}$ must 100 V/m

$$E_{V/m}\sqrt{P_D Z_{FS}} \qquad Z_{FS} = 377\Omega$$

$$P_D = \frac{E_{V/m^2}}{Z_{FS}} = \frac{100^2}{377} = 26.52 \text{ W/m}^2$$

$$P_D = \frac{E_{V/m^2}}{4\pi D^2} \qquad D = \left[\frac{ERP}{4\pi P_D}\right]^{1/2}$$

$$D = \left[\frac{3572 \times 10^2}{4\pi\ (26.52)}\right]^{1/2} = 3273.89 \text{ m}$$

$$\approx 3274 \text{ m}$$

Applying the above approach, the appropriated distances from the PAVE PAWS emitter are provided from 10 to 100 V/m in 10 V/m increments in Table 4.

The S-76 HIRF fly-by test flights will be coordinated by the FAA with the PAVE PAWS Director of Operations. Referring to the local area map (Appendix F), note the runways at Otis Air Force Station. Fly-by operations are anticipated to be co-directed from the Otis tower and PAVE PAWS Operations.

The PAVE PAWS radar is sited at the top of a hill approximately 100 ft above the surrounding coastland. This factor should facilitate safe air approaches toward the transmitter site.

Table 4. PAVE PAWS E-Field Levels Analysis

DESIRED E (V/m)	ERP	POWER DENSITY (W/m^2)	RADIUS FROM TRANSMITTER (m)
100	3.57E+09	26.52519894	3274
90	3.57E+09	21.48541114	3638
80	3.57E+09	16.97612732	4093
70	3.57E+09	12.99734748	4678
60	3.57E+09	9.549071618	5457
50	3.57E+09	6.631299735	6549
40	3.57E+09	4.24403183	8186
30	3.57E+09	2.387267905	10915
20	3.57E+09	1.061007958	16372
10	3.57E+09	0.265251989	32744

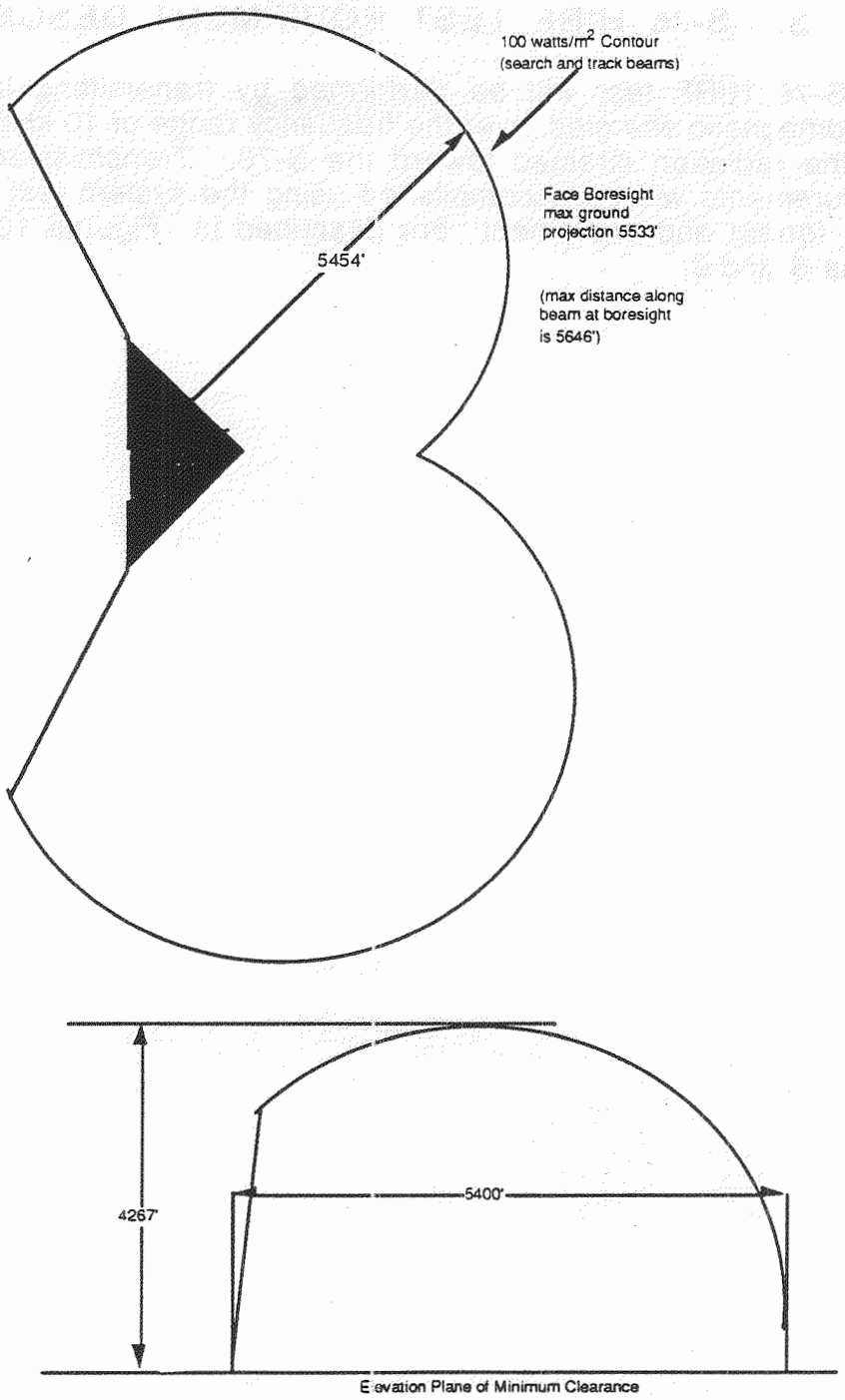

Figure 9. PAVE PAWS

3. S-76 HIRF TEST EQUIPMENT DESCRIPTION

The S-76 HIRF test will be performed by transmitting low levels of RF electromagnetic energies, over the frequency range of 10 kHz to 18 GHz, with antenna radiation directed toward the S-76. Transmission, reception, and measurements will be accomplished using the system test equipment. The HST format and equipment are described in Figures 10 through 14 and Tables 5 and 6.

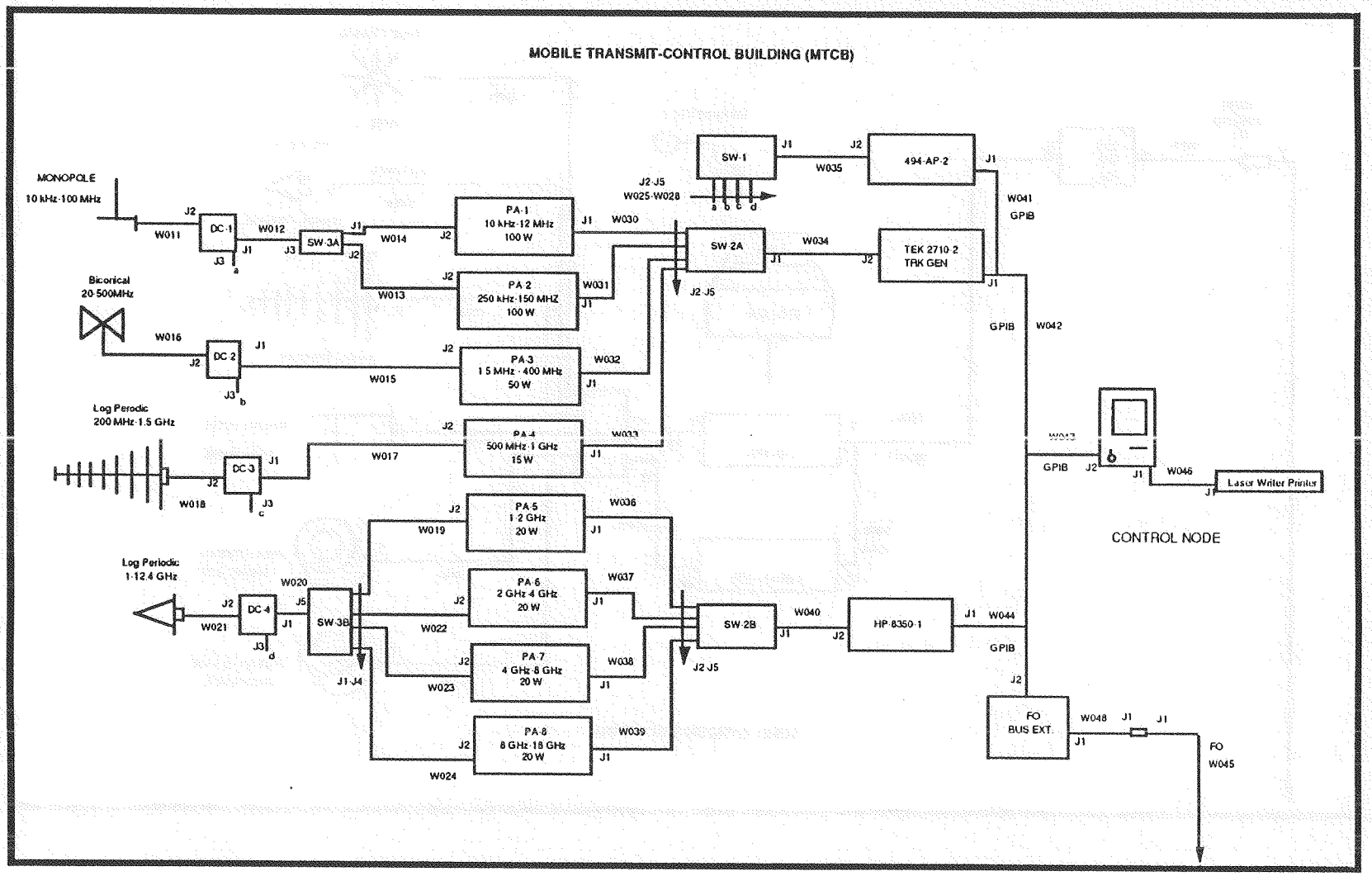

Figure 10. Block Diagram of the Transmit/Control Node

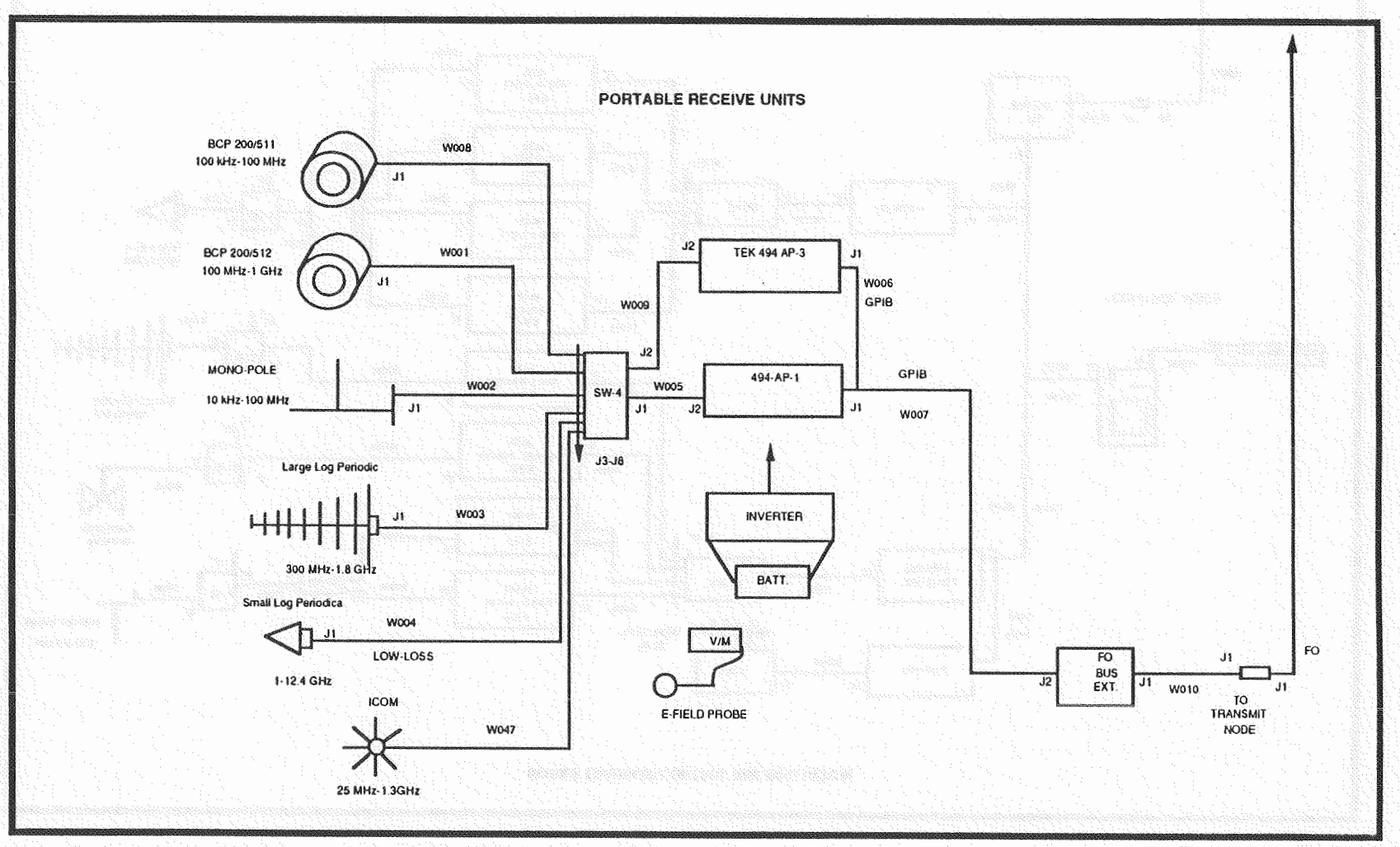

Figure 11. Block Diagram of the Receive Node - Ground Test

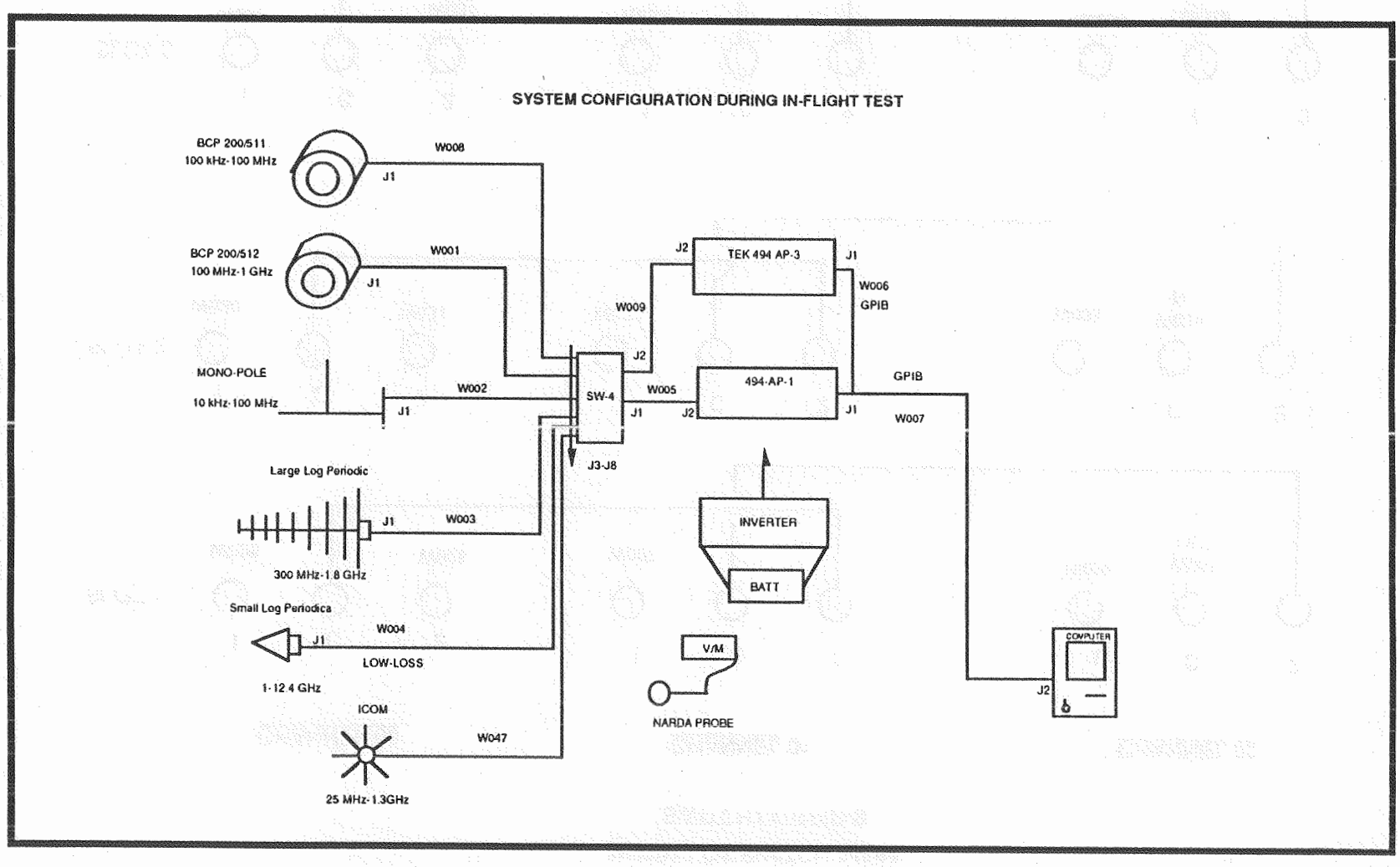

Figure 12. Block Diagram of the Receive Node - Fly-By Test

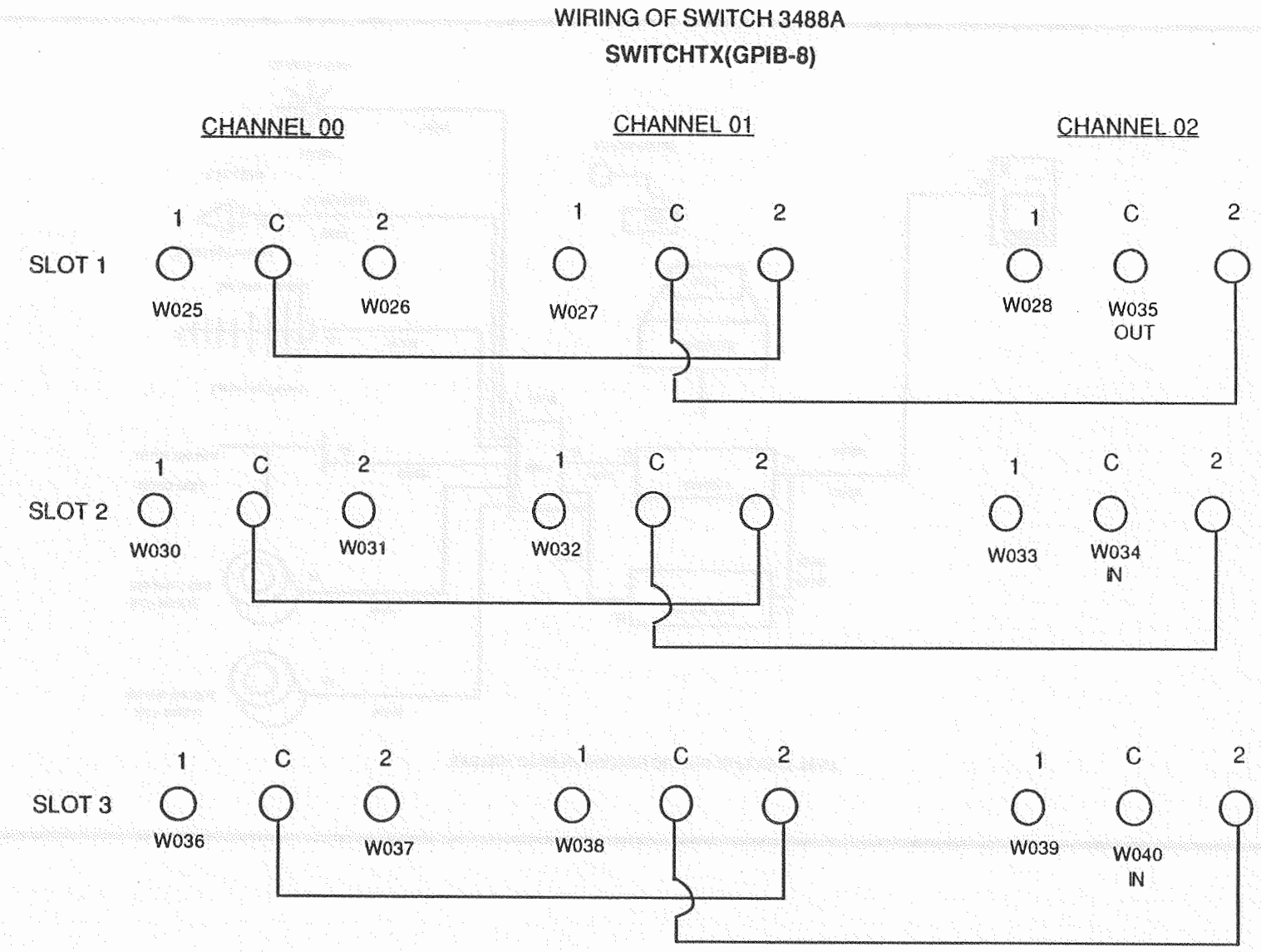

Figure 13. Transmit Switch Wiring

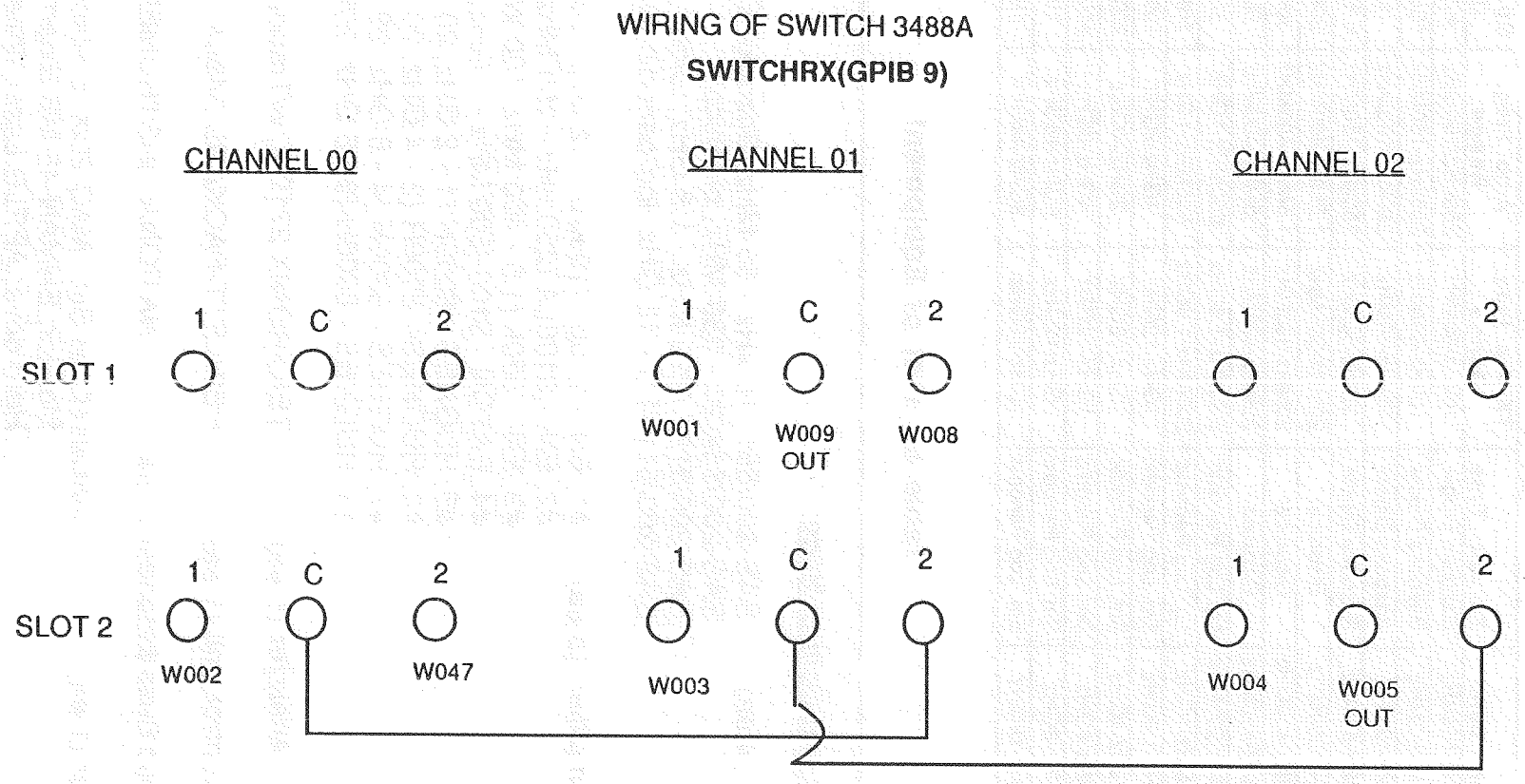

Figure 14. Receive Switch Wiring

Table 5. Frequency Band Settings

Band No.	Freq. Band	TX Ant. Type	TX Ant Freq. Range	Amp Freq. Range	Span/ Div	RX Ant.	Center Freq.
1	10kHz-500kHz	Bazooka Dipole	10kHz-60MHz	250kHz-150MHz	49kHz	Monopole	255kHz
2	500kHz-2MHz	Bazooka Dipole	10kHz-60MHz	250kHz-150MHz	150kHz	Monopole	1.25MHz
3	2MHz-12MHZ	Bazooka Dipole	10kHz-60MHz	250kHz-150MHz	1MHz	Monopole	7MHz
4	12MHz-50MHz	Bazooka Dipole	10kHz-60MHz	250kHz-150MHz	8.8MHz	Monopole	31MHz
5	50MHz-300MHz	Biconical	20MHz-330MHz	1.5MHz-400MHz	20MHz	AH 7000	175MHz
6	300MHz-400MHz	Biconical	20MHz-330MHz	1.5MHz-400MHz	30MHz	Lg. Log Periodic	350MHz
7	400MHZ-450MHz	Biconical	20MHz-330MHz	1.5MHz-400MHz	5MHz	Lg. Log Periodic	425MHz
8	450MHz-500MHz	Lg. Log Periodic	200MHz-1.8GHz	500MHz-1GHz	5MHz	Lg. Log Periodic	475MHz
9	500MHz-1GHz	Lg. Log Periodic	200MHz-1.8GHz	500MHz-1GHz	50MHz	Lg. Log Periodic	750MHz
10	1GHz-1.8GHz	Sm. Log Periodic	1GHz-12GHz	1GHz-2GHz	100MHz	Sm. Log Periodic	1.4GHz
11	1.8GHz-4GHz	Sm. Log Periodic	1GHz-12GHz	2GHZ-4GHz	200MHz	Sm. Log Periodic	2.9GHz
12	4GHz-6GHz	Sm. Log Periodic	1GHz-12GHz	4GHz-8GHz	400MHz	Sm. Log Periodic	5GHz
13	6GHz-8GHz	Sm. Log Periodic	1GHz-12GHz	8GHz-18GHz	1GHz	Sm. Log Periodic	7GHz
14	8GHz-18GHz	Sm. Log Periodic	1GHz-12GHz	8GHz-18GHz	1GHz	Sm. Log Periodic	13GHz

Table 6. List of Equipment

Transmit and Control Node:

Antenna (4 ea): SAS-200/551 (10 kHz - 50 MHz, Bazooka Dipole)
SAS-200/554(20 - 330 MHz, biconical)
SAS-200/512F (220 MHz - 1.8 GHz, folded log-periodic)
SAS-200/511 (1.0 - 18 GHz, log-periodic, w/spec variance)

Power Amplifier (8 ea): #1, ENI - 2100L (10 kHz - 12 MHz, 100 W)
#2, ENI - 3100LA (250 kHz - 150 MHz, 100 W)
#3, ENI - 550L (1.5 - 400 MHz, 100 W)
#4, EATON - 5100 (500 MHz - 1 GHz, 45 W)
#5, HUGHES - 8000H (1 - 2 GHz, 20 W)
#6, HUGHES - 8000H (2 - 4 GHz, 20 W)
#7, HUGHES - 8000H (4 - 8 GHz, 20 W)
#8, HUGHES - 8000H (8-18 GHz, 20W)

Spectrum Analyzer (1 ea): TEKTRONIX 2710-2, w/Tracking Generator

Switch Control Unit (1 ea): HEWLETT-PACKARD 3488A, 3 cards-6 sw ea

Fiber Optic Buss Extender (1 ea): NATIONAL INSTRUMENTS, GPIB-110.

Computer (1 ea): MACINTOSH Set: MAC 2CX, E-Machines
Monitor; EHMAN 45 MB External
Hard drive; APPLE Laser Writer 2NT.

Table 6. Continued

Transmit and Control Node continued	
MTCB (1 ea):	SCIENTECH Mobile Transmitter/Control Building, Shielded Enclosure for Transmit and Control Nodes, truck transportable
Receive Node:	
Current Monitor Probe (2 ea):	AH Systems BCP-200/511 (0.1 - 100 MHz) AH Systems BCP-200/512 (100 - 1000 MHz)
Antenna (4 ea):	SAS- 200/550-1 (10 kHz - 60 MHz), active monopole SAS- 200/510 (300 MHz - 1.8 GHz), log-periodic SAS- 100/511 (1.0 - 18 GHz, w/spec variance and MITEQ Preamp w/20 db gain ICOM AH-7000 - Wideband , disconed (25-1300 MHz).
Spectrum Analyzer (2 ea)	TEKTRONIX 494AP, (26 GHz range)
Fiber Optic Buss Extender (1 ea)	NATIONAL INSTRUMENTS - GPIB-110
Switch Control Unit (1 ea):	HEWLETT-PACKARD 3488A, 2 cards-6 sw ea
AC Power Inverter (1 ea):	MINUTEMAN - MM 1600 SS/1
Battery (4 ea):	ADS 48 V Gel-Cel type, 100 amp (4 12V in series)

4. TEST METHODOLOGY

4.1 FAA TECHNICAL CENTER, ATLANTIC CITY INTERNATIONAL AIRPORT, NJ, TEST AREA DESCRIPTION

An airport diagram indicating the radar locations and other pertinent features is located in Appendix D.

4.2 TEST DESCRIPTIONS

The following subsections briefly describe the four types of tests to be performed.

4.2.1 E-Field Measurements

The E-Field will be measured inside the S-76 from various transmit locations. The frequency range for this measurement is from 10 kHz to 18 GHz. The E-Field originates from the Mobile Transmitter/Control Building (MTCB) where the transmit antennae broadcast the frequency band of concern. The S-76 will be positioned so that it will be irradiated from three different sides. There will be four different antennae inside the aircraft which will be receiving the various signals from the MTCB. The E-Field will be 1-3 V/m incident upon the outside of the S-76. To get this E-field level, the distance to the S-76 and the power output of the amplifiers will be adjusted. The E-Field induced inside will be a result of the natural apertures and attenuation of the aircraft. The induced signal will be sent to the analyzer and to the Control Node where a readout will be seen.

4.2.2 SCAL Tests

SCAL will be performed prior to positioning the S-76 in the test area. The purpose of the tests is to evaluate ambient E-Field conditions and to calibrate to ensure required incident field strengths exist when the aircraft is positioned for on-board tests. SCAL tests will be performed by radiating the S-76 over the frequency range of 10 kHz to 18 GHz to ensure approximately 1-3 V/m E-Field levels are applied during LLSC and E-Field tests. A second segment of SCAL tests will be performed at the conclusion of the LLSC and E-Field tests to provide verification of the first SCAL and the calibration of the test system equipment operation.

4.2.3 LLSC Tests

LLSC tests will be performed to determine current levels induced in cable bundles associated with on-board systems. The on-board systems will be specified by the FAA Contracting Officer's Technical Representative (COTR). Systems specified to date are: wires to full authority digital electronic control (FADEC) area, wires to electronic flight instrument system (EFIS), and wires to Standby Altitude Indicator. Cable current tests will be performed by irradiating the S-76 with electromagnetic energy at levels identical to those specified during SCAL over the frequency range of 10 kHz to 1 GHz.

4.2.4 Fly-By Tests

The S-76 will perform three fly-by tests near FAA and military radar units. These tests are to simulate real world situations for actual E-Field measurements incident upon the S-76 cabin. These will be measured using the on-board antennae and the spectrum analyzers. Induced current levels will be measured using the current probes on cable bundles to be determined. Two video cameras will be used to record the results. One will be viewing receiving analyzers and the other the cockpit controls and indicators. The resultant E-Fields and cable currents will be viewed as well as recorded to the disk of the on-board computer. The process of gathering data is exactly the same for both E-Field measurements and the LLSC test.

4.3 DATA PROCESSING

The raw data taken from E-Field measurements and cable current measurements are stored onto an Ehman 45 MB removable hard disk. The data are then processed taking the antennae factors, current probe factors, cable and switch loss. The data are corrected using software written for this application. This corrected data are also stored to the disk and will be a part of the final report. From the data collected, the attenuation factor as a function of frequency will be determined for the aircraft.

4.4 TEST ARTICLE ANALYSIS

Table 7 will be correlated with the S-76 positions for installed avionics equipment. Dimensions used for these calculations were obtained from the S-76 Maintenance Manual, SA 4047-76-2, Chapter 6 (Appendix G).

4.4.1 Test Article

The Test Article is an FAA Sikorsky-76 helicopter, with installed avionics flight control instrumentation as well as mechanical controls.

4.4.2 Test Article Resonance Analysis

Table 7. Anticipated Aircraft Resonances

S-76 CRAFT LOCATION	POLARIZATION		DIM. (m)	FULL WAVELENGTH FREQ. (MHz)	1/2 WAVELENGTH FREQ. (MHz)	1/4 WAVELENGTH FREQ. (MHz)
	Vert.	Hori.				
Total Craft Length		X	13.00	23.10	11.55	5.76
Total Craft Width		X	2.13	140.70	70.35	35.18
Total Craft Height	X		3.60	83.30	41.65	20.83
Nosecone Width (Comp. Mtl.)		X	1.52	197.23	98.62	49.31
Nosecone Height (Comp. Mtl.)	X		0.89	336.85	168.43	84.21

Table 7. Continued

S-76 CRAFT LOCATION	POLARIZATION Vert.	POLARIZATION Hori.	DIM. (m)	FULL WAVELENGTH FREQ. (MHz)	1/2 WAVELENGTH FREQ. (MHz)	1/4 WAVELENGTH FREQ. (MHz)
Cabin Length		X	2.41	124.40	62.20	31.10
Cabin Height	X		1.37	218.83	109.42	54.71
Cabin Width		X	1.93	155.33	77.67	38.83
Cabin and Pilot Door Height	X		1.32	227.11	113.11	56.78
Cabin and Pilot Door Width		X	0.95	315.57	157.79	78.89
Rear Cabin Height	X		1.04	288.26	144.13	72.07
Baggage Door Height	X		0.74	405.12	202.56	101.28
Baggage Door Length		X	0.91	329.44	164.72	82.36
Baggage Door Width		X	1.63	183.92	91.96	45.98
Small Window Height	X		0.60	499.65	249.83	124.91
Small Window Width		X	0.30	999.31	499.65	249.83
Pilot Door Window Height	X		0.53	565.65	282.82	141.41
Pilot Door Window Width		X	0.45	666.21	333.10	166.55
Cabin Door Window Height	X		0.53	565.65	282.82	141.41
Cabin Door Window Width		X	0.45	666.21	333.10	166.55
Turbine Intake Aperture Ht	X		0.30	999.31	499.65	249.83
Turbine Intake Aperture Wdt		X	0.10	2997.92	1498.96	749.48
Turbine Exhaust Aperture Ht	X		0.10	2997.92	1498.96	749.48
Turbine Exhaust Aperture Wdt		X	1.40	214.14	107.07	53.53
Average Fuselage Height	X		1.30	230.61	115.30	57.65
Average Fuselage Width		X	1.00	299.79	149.90	74.95

4.5 DATA ACQUISITION AND PROCESSING SYSTEM

4.5.1 Overview

The Electronic Data Acquisition and Processing System (EDAPS) subset of the test system is an integration of the hardware and software used to generate, measure, and maintain computer memory of external and internal E-Fields. The EDAPS immediately prints the resulting waveforms and archives the acquired data to a removable disk for post-test storage and retrieval. The EDAPS acquisition process, algorithm used, and data processing and storage formats are discussed in Sections 4.3.2 and 4.3.3.

4.5.2 Algorithms

Test signal received and measured data are acquired from two Tektronix 494 AP spectrum analyzers (494s). The 494s provide a digitized form of the received analog waveforms, in dBm (dB referenced to 1 mW). The data are transferred from the 494s via an IEEE-488 General Purpose Interface Buss (GPIB).

4.5.3 Data Acquisition Presentation

Once the data are received, the EDAPS Central Processor (EDAPSCP) presents both E-Field and cable current data in the following form (Figure 15):

1. Background noise in dBμV.

2. Signal to noise ratio (SNR) in dBμV.

3. Aircraft attenuation (E-Field only) in dBμV.

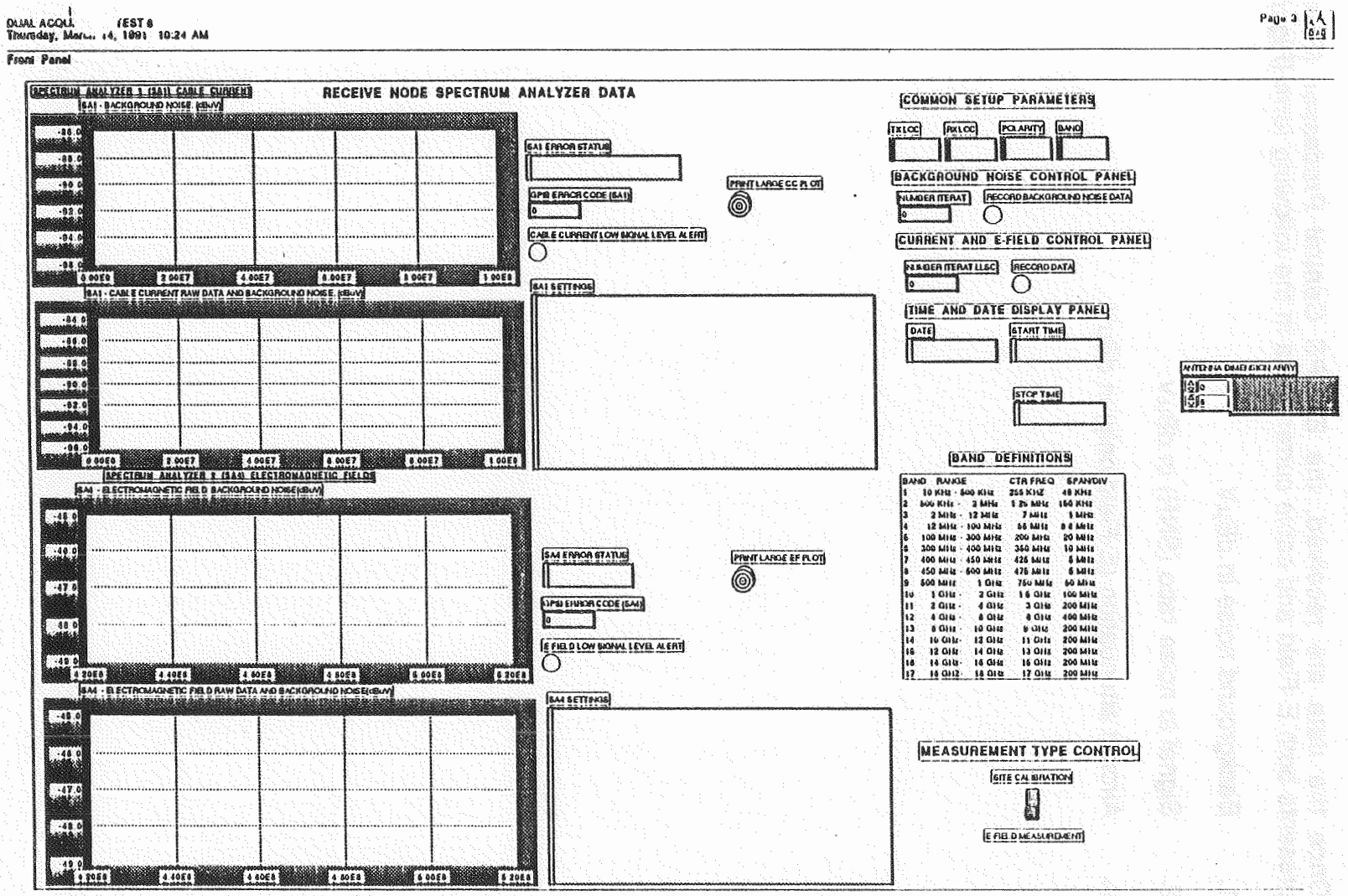

Figure 15. Data Acquisition System Display

APPENDIX A

LIST OF DELIVERABLES

APPENDIX A

LIST OF DELIVERABLES

1. S-76 HIRF TEST PLAN
2. S-76 HIRF TEST CONDUCTANCE
3. PRESENTATION TO SAE-AE4R
4. S-76 HIRF TEST REPORT

APPENDIX B

S-76 HIRF TEST SCHEDULE

S-76 HIRF TEST SCHEDULE

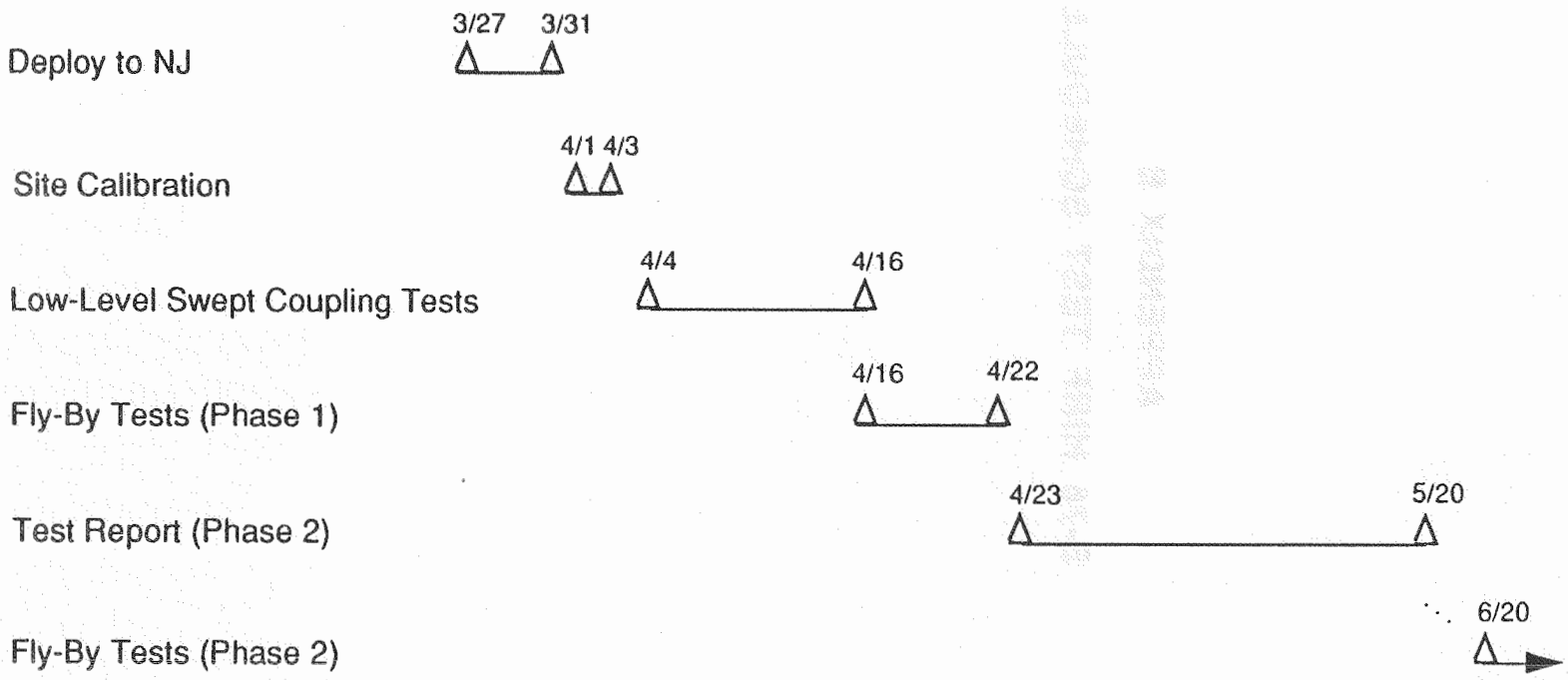

APPENDIX C

TEST DEFINITION MATRICES

	A	C	D	E	F	G	H	I	J	K
1					S-76 HERF TEST DEFINITION MATRIX					
2										
3	TEST IDENTIFICATION NO.	TX LOCATION	RX LOCATION	BAND	FREQUENCY RANGE	TX ANTENNA	RX ANTENNA	PROBE LOC.	ANTENNA POLARIZATION	TYPE OF TEST
4										
4										
5	SITE CALIBRATION									
6	BACKGROUND NOISE									
7	BN101VABNR1	N/A	R1	A	10 kHZ-500kHz	N/A	SAS-200/550		VERTICAL	SITE CALIBRATION BACKGROUND NOISE
8	BN101VBBNR1	N/A	R1	B	500kHz-2MHz	N/A	SAS-200/550		VERTICAL	SITE CALIBRATION BACKGROUND NOISE
9	BN101VCBNR1	N/A	R1	C	2MHz-10MHz	N/A	SAS-200/550		VERTICAL	SITE CALIBRATION BACKGROUND NOISE
10	BN101VDBNR1	N/A	R1	D	10MHz-20MHz	N/A	SAS-200/550		VERTICAL	SITE CALIBRATION BACKGROUND NOISE
11	BN101VEBNR1	N/A	R1	E	20Mhz-30MHz	N/A	SAS-200/550		VERTICAL	SITE CALIBRATION BACKGROUND NOISE
12	BN101VFBNR1	N/A	R1	F	30MHz-100MHz	N/A	SAS-200/550		VERTICAL	SITE CALIBRATION BACKGROUND NOISE
13	BN101VGBNR1	N/A	R1	G	100MHz-200MHz	N/A	ACD-10R		VERTICAL	SITE CALIBRATION BACKGROUND NOISE
14	BN101VHBNR1	N/A	R1	H	200MHz-400MHz	N/A	ACD-10R		VERTICAL	SITE CALIBRATION BACKGROUND NOISE
15	BN101VIBNR1	N/A	R1	I	400MHz-1GHz	N/A	ACD-10R		VERTICAL	SITE CALIBRATION BACKGROUND NOISE
16	BN101VJBNR1	N/A	R1	J	1GHz-2GHz	N/A	TECOM		VERTICAL	SITE CALIBRATION BACKGROUND NOISE
17	BN101VKBNR1	N/A	R1	K	2GHz-4GHz	N/A	TECOM		VERTICAL	SITE CALIBRATION BACKGROUND NOISE
18	BN101VLBNR1	N/A	R1	L	4GHz-6GHz	N/A	TECOM		VERTICAL	SITE CALIBRATION BACKGROUND NOISE
19	BN101VMBNR1	N/A	R1	M	6GHz-8GHz	N/A	TECOM		VERTICAL	SITE CALIBRATION BACKGROUND NOISE
20	BN101VNBNR1	N/A	R1	N	8GHz-10GHz	N/A	TECOM		VERTICAL	SITE CALIBRATION BACKGROUND NOISE
21	BN101VOBNR1	N/A	R1	O	10GHz-18GHz	N/A	TECOM		VERTICAL	SITE CALIBRATION BACKGROUND NOISE
22	BN101VABNR3	N/A	R3	A	10 kHZ-500kHz	N/A	SAS-200/550		VERTICAL	SITE CALIBRATION BACKGROUND NOISE
23	BN101VBBNR3	N/A	R3	B	500kHz-2MHz	N/A	SAS-200/550		VERTICAL	SITE CALIBRATION BACKGROUND NOISE
24	BN101VCBNR3	N/A	R3	C	2MHz-10MHz	N/A	SAS-200/550		VERTICAL	SITE CALIBRATION BACKGROUND NOISE
25	BN101VDBNR3	N/A	R3	D	10MHz-20MHz	N/A	SAS-200/550		VERTICAL	SITE CALIBRATION BACKGROUND NOISE
26	BN101VEBNR3	N/A	R3	E	20Mhz-30MHz	N/A	SAS-200/550		VERTICAL	SITE CALIBRATION BACKGROUND NOISE
27	BN101VFBNR3	N/A	R3	F	30MHz-100MHz	N/A	SAS-200/550		VERTICAL	SITE CALIBRATION BACKGROUND NOISE
28	BN101VGBNR3	N/A	R3	G	100MHz-200MHz	N/A	ACD-10R		VERTICAL	SITE CALIBRATION BACKGROUND NOISE
29	BN101VHBNR3	N/A	R3	H	200MHz-400MHz	N/A	ACD-10R		VERTICAL	SITE CALIBRATION BACKGROUND NOISE
30	BN101VIBNR3	N/A	R3	I	400MHz-1GHz	N/A	ACD-10R		VERTICAL	SITE CALIBRATION BACKGROUND NOISE
31	BN101VJBNR3	N/A	R3	J	1GHz-2GHz	N/A	TECOM		VERTICAL	SITE CALIBRATION BACKGROUND NOISE
32	BN101VKBNR3	N/A	R3	K	2GHz-4GHz	N/A	TECOM		VERTICAL	SITE CALIBRATION BACKGROUND NOISE
33	BN101VLBNR3	N/A	R3	L	4GHz-6GHz	N/A	TECOM		VERTICAL	SITE CALIBRATION BACKGROUND NOISE
34	BN101VMBNR3	N/A	R3	M	6GHz-8GHz	N/A	TECOM		VERTICAL	SITE CALIBRATION BACKGROUND NOISE
35	BN101VNBNR3	N/A	R3	N	8GHz-10GHz	N/A	TECOM		VERTICAL	SITE CALIBRATION BACKGROUND NOISE
36	BN101VOBNR3	N/A	R3	O	10GHz-18GHz	N/A	TECOM		VERTICAL	SITE CALIBRATION BACKGROUND NOISE
37	SITE CALIBRATION									
38	E-FIELD									
39	SC102VAT1R1	T1	R1	A	10 kHZ-500kHz	PEA-30	SAS-200/550		VERTICAL	SITE CALIBRATION E-FIELD
40	SC102VBT1R1	T1	R1	B	500kHz-2MHz	PEA-30	SAS-200/550		VERTICAL	SITE CALIBRATION E-FIELD
41	SC102VCT1R1	T1	R1	C	2MHz-10MHz	PEA-30	SAS-200/550		VERTICAL	SITE CALIBRATION E-FIELD
42	SC102VDT1R1	T1	R1	D	10MHz-20MHz	PEA-30	SAS-200/550		VERTICAL	SITE CALIBRATION E-FIELD
43	SC102VET1R1	T1	R1	E	20Mhz-30MHz	PEA-30	SAS-200/550		VERTICAL	SITE CALIBRATION E-FIELD
44	SC102VFT1R1	T1	R1	F	30MHz-100MHz	SAS-200/540	SAS-200/550		VERTICAL	SITE CALIBRATION E-FIELD
45	SC102VGT1R1	T1	R1	G	100MHz-200MHz	SAS-200/540	ACD-10R		VERTICAL	SITE CALIBRATION E-FIELD
46	SC102VHT1R1	T1	R1	H	200MHz-400MHz	LPA-30	ACD-10R		VERTICAL	SITE CALIBRATION E-FIELD
47	SC102VIT1R1	T1	R1	I	400MHz-1GHz	LPA-30	ACD-10R		VERTICAL	SITE CALIBRATION E-FIELD
48	SC102VJT1R1	T1	R1	J	1GHz-2GHz	RGA-60	TECOM		VERTICAL	SITE CALIBRATION E-FIELD
49	SC102VKT1R1	T1	R1	K	2GHz-4GHz	RGA-60	TECOM		VERTICAL	SITE CALIBRATION E-FIELD
50	SC102VLT1R1	T1	R1	L	4GHz-6GHz	RGA-60	TECOM		VERTICAL	SITE CALIBRATION E-FIELD
51	SC102VMT1R1	T1	R1	M	6GHz-8GHz	RGA-60	TECOM		VERTICAL	SITE CALIBRATION E-FIELD
52	SC102VNT1R1	T1	R1	N	8GHz-10GHz	RGA-60	TECOM		VERTICAL	SITE CALIBRATION E-FIELD
53	SC102VOT1R1	T1	R1	O	10GHz-18GHz	RGA-60	TECOM		VERTICAL	SITE CALIBRATION E-FIELD
54	SC102HAT1R1	T1	R1	A	10 kHZ-500kHz	PEA-30	SAS-200/550		HORIZONTAL	SITE CALIBRATION E-FIELD
55	SC102HBT1R1	T1	R1	B	500kHz-2MHz	PEA-30	SAS-200/550		HORIZONTAL	SITE CALIBRATION E-FIELD
56	SC102HCT1R1	T1	R1	C	2MHz-10MHz	PEA-30	SAS-200/550		HORIZONTAL	SITE CALIBRATION E-FIELD
57	SC102HDT1R1	T1	R1	D	10MHz-20MHz	PEA-30	SAS-200/550		HORIZONTAL	SITE CALIBRATION E-FIELD
58	SC102HET1R1	T1	R1	E	20Mhz-30MHz	PEA-30	SAS-200/550		HORIZONTAL	SITE CALIBRATION E-FIELD
59	SC102HFT1R1	T1	R1	F	30MHz-100MHz	SAS-200/540	SAS-200/550		HORIZONTAL	SITE CALIBRATION E-FIELD
60	SC102HGT1R1	T1	R1	G	100MHz-200MHz	SAS-200/540	ACD-10R		HORIZONTAL	SITE CALIBRATION E-FIELD
61	SC102HHT1R1	T1	R1	H	200MHz-400MHz	LPA-30	ACD-10R		HORIZONTAL	SITE CALIBRATION E-FIELD
62	SC102HIT1R1	T1	R1	I	400MHz-1GHz	LPA-30	ACD-10R		HORIZONTAL	SITE CALIBRATION E-FIELD
63	SC102HJT1R1	T1	R1	J	1GHz-2GHz	RGA-60	TECOM		HORIZONTAL	SITE CALIBRATION E-FIELD
64	SC102HKT1R1	T1	R1	K	2GHz-4GHz	RGA-60	TECOM		HORIZONTAL	SITE CALIBRATION E-FIELD
65	SC102HLT1R1	T1	R1	L	4GHz-6GHz	RGA-60	TECOM		HORIZONTAL	SITE CALIBRATION E-FIELD
66	SC102HMT1R1	T1	R1	M	6GHz-8GHz	RGA-60	TECOM		HORIZONTAL	SITE CALIBRATION E-FIELD
67	SC102HNT1R1	T1	R1	N	8GHz-10GHz	RGA-60	TECOM		HORIZONTAL	SITE CALIBRATION E-FIELD

	A	C	D	E	F	G	H	I	J	K
1					S-76 HERF TEST DEFINITION MATRIX					
2										
3	TEST IDENTIFICATION NO.	TX LOCATION	RX LOCATION	BAND	FREQUENCY RANGE	TX ANTENNA	RX ANTENNA	PROBE LOC.	ANTENNA POLARIZATION	TYPE OF TEST
4										
68	SC102HOT1R1	T1	R1	O	10GHz-18GHz	RGA-60	TECOM		HORIZONTAL	SITE CALIBRATION E-FIELD
69	SC103VAT1R2	T1	R2	A	10 kHZ-500kHz	PEA-30	SAS-200/550		VERTICAL	SITE CALIBRATION E-FIELD
70	SC103VBT1R2	T1	R2	B	500kHz-2MHz	PEA-30	SAS-200/550		VERTICAL	SITE CALIBRATION E-FIELD
71	SC103VCT1R2	T1	R2	C	2MHz-10MHz	PEA-30	SAS-200/550		VERTICAL	SITE CALIBRATION E-FIELD
72	SC103VDT1R2	T1	R2	D	10MHz-20MHz	PEA-30	SAS-200/550		VERTICAL	SITE CALIBRATION E-FIELD
73	SC103VET1R2	T1	R2	E	20Mhz-30MHz	PEA-30	SAS-200/550		VERTICAL	SITE CALIBRATION E-FIELD
74	SC103VFT1R2	T1	R2	F	30MHz-100MHz	SAS-200/540	SAS-200/550		VERTICAL	SITE CALIBRATION E-FIELD
75	SC103VGT1R2	T1	R2	G	100MHz-200MHz	SAS-200/540	ACD-10R		VERTICAL	SITE CALIBRATION E-FIELD
76	SC103VHT1R2	T1	R2	H	200MHz-400MHz	LPA-30	ACD-10R		VERTICAL	SITE CALIBRATION E-FIELD
77	SC103VIT1R2	T1	R2	I	400MHz-1GHz	LPA-30	ACD-10R		VERTICAL	SITE CALIBRATION E-FIELD
78	SC103VJT1R2	T1	R2	J	1GHz-2GHz	RGA-60	TECOM		VERTICAL	SITE CALIBRATION E-FIELD
79	SC103VKT1R2	T1	R2	K	2GHz-4GHz	RGA-60	TECOM		VERTICAL	SITE CALIBRATION E-FIELD
80	SC103VLT1R2	T1	R2	L	4GHz-6GHz	RGA-60	TECOM		VERTICAL	SITE CALIBRATION E-FIELD
81	SC103VMT1R2	T1	R2	M	6GHz-8GHz	RGA-60	TECOM		VERTICAL	SITE CALIBRATION E-FIELD
82	SC103VNT1R2	T1	R2	N	8GHz-10GHz	RGA-60	TECOM		VERTICAL	SITE CALIBRATION E-FIELD
83	SC103VOT1R2	T1	R2	O	10GHz-18GHz	RGA-60	TECOM		VERTICAL	SITE CALIBRATION E-FIELD
84	SC103HAT1R2	T1	R2	A	10 kHZ-500kHz	PEA-30	SAS-200/550		HORIZONTAL	SITE CALIBRATION E-FIELD
85	SC103HBT1R2	T1	R2	B	500kHz-2MHz	PEA-30	SAS-200/550		HORIZONTAL	SITE CALIBRATION E-FIELD
86	SC103HCT1R2	T1	R2	C	2MHz-10MHz	PEA-30	SAS-200/550		HORIZONTAL	SITE CALIBRATION E-FIELD
87	SC103HDT1R2	T1	R2	D	10MHz-20MHz	PEA-30	SAS-200/550		HORIZONTAL	SITE CALIBRATION E-FIELD
88	SC103HET1R2	T1	R2	E	20Mhz-30MHz	PEA-30	SAS-200/550		HORIZONTAL	SITE CALIBRATION E-FIELD
89	SC103HFT1R2	T1	R2	F	30MHz-100MHz	SAS-200/540	SAS-200/550		HORIZONTAL	SITE CALIBRATION E-FIELD
90	SC103HGT1R2	T1	R2	G	100MHz-200MHz	SAS-200/540	ACD-10R		HORIZONTAL	SITE CALIBRATION E-FIELD
91	SC103HHT1R2	T1	R2	H	200MHz-400MHz	LPA-30	ACD-10R		HORIZONTAL	SITE CALIBRATION E-FIELD
92	SC103HIT1R2	T1	R2	I	400MHz-1GHz	LPA-30	ACD-10R		HORIZONTAL	SITE CALIBRATION E-FIELD
93	SC103HJT1R2	T1	R2	J	1GHz-2GHz	RGA-60	TECOM		HORIZONTAL	SITE CALIBRATION E-FIELD
94	SC103HKT1R2	T1	R2	K	2GHz-4GHz	RGA-60	TECOM		HORIZONTAL	SITE CALIBRATION E-FIELD
95	SC103HLT1R2	T1	R2	L	4GHz-6GHz	RGA-60	TECOM		HORIZONTAL	SITE CALIBRATION E-FIELD
96	SC103HMT1R2	T1	R2	M	6GHz-8GHz	RGA-60	TECOM		HORIZONTAL	SITE CALIBRATION E-FIELD
97	SC103HNT1R2	T1	R2	N	8GHz-10GHz	RGA-60	TECOM		HORIZONTAL	SITE CALIBRATION E-FIELD
98	SC103HOT1R2	T1	R2	O	10GHz-18GHz	RGA-60	TECOM		HORIZONTAL	SITE CALIBRATION E-FIELD
99	SC104VAT2R1	T2	R1	A	10 kHZ-500kHz	PEA-30	SAS-200/550		VERTICAL	SITE CALIBRATION E-FIELD
100	SC104VBT1R1	T1	R1	B	500kHz-2MHz	PEA-30	SAS-200/550		VERTICAL	SITE CALIBRATION E-FIELD
101	SC104VCT2R1	T2	R1	C	2MHz-10MHz	PEA-30	SAS-200/550		VERTICAL	SITE CALIBRATION E-FIELD
102	SC104VDT2R1	T2	R1	D	10MHz-20MHz	PEA-30	SAS-200/550		VERTICAL	SITE CALIBRATION E-FIELD
103	SC104VET2R1	T2	R1	E	20Mhz-30MHz	PEA-30	SAS-200/550		VERTICAL	SITE CALIBRATION E-FIELD
104	SC104VFT2R1	T2	R1	F	30MHz-100MHz	SAS-200/540	SAS-200/550		VERTICAL	SITE CALIBRATION E-FIELD
105	SC104VGT2R1	T2	R1	G	100MHz-200MHz	SAS-200/540	ACD-10R		VERTICAL	SITE CALIBRATION E-FIELD
106	SC104VHT2R1	T2	R1	H	200MHz-400MHz	LPA-30	ACD-10R		VERTICAL	SITE CALIBRATION E-FIELD
107	SC104VIT2R1	T2	R1	I	400MHz-1GHz	LPA-30	ACD-10R		VERTICAL	SITE CALIBRATION E-FIELD
108	SC104VJT2R1	T2	R1	J	1GHz-2GHz	RGA-60	TECOM		VERTICAL	SITE CALIBRATION E-FIELD
109	SC104VKT2R1	T2	R1	K	2GHz-4GHz	RGA-60	TECOM		VERTICAL	SITE CALIBRATION E-FIELD
110	SC104VLT2R1	T2	R1	L	4GHz-6GHz	RGA-60	TECOM		VERTICAL	SITE CALIBRATION E-FIELD
111	SC104VMT2R1	T2	R1	M	6GHz-8GHz	RGA-60	TECOM		VERTICAL	SITE CALIBRATION E-FIELD
112	SC104VNT2R1	T2	R1	N	8GHz-10GHz	RGA-60	TECOM		VERTICAL	SITE CALIBRATION E-FIELD
113	SC104VOT2R1	T2	R1	O	10GHz-18GHz	RGA-60	TECOM		VERTICAL	SITE CALIBRATION E-FIELD
114	SC104HAT1R1	T1	R1	A	10 kHZ-500kHz	PEA-30	SAS-200/550		HORIZONTAL	SITE CALIBRATION E-FIELD
115	SC104HBT2R1	T2	R1	B	500kHz-2MHz	PEA-30	SAS-200/550		HORIZONTAL	SITE CALIBRATION E-FIELD
116	SC104HCT2R1	T2	R1	C	2MHz-10MHz	PEA-30	SAS-200/550		HORIZONTAL	SITE CALIBRATION E-FIELD
117	SC104HDT2R1	T2	R1	D	10MHz-20MHz	PEA-30	SAS-200/550		HORIZONTAL	SITE CALIBRATION E-FIELD
118	SC104HET2R1	T2	R1	E	20Mhz-30MHz	PEA-30	SAS-200/550		HORIZONTAL	SITE CALIBRATION E-FIELD
119	SC104HFT2R1	T2	R1	F	30MHz-100MHz	SAS-200/540	SAS-200/550		HORIZONTAL	SITE CALIBRATION E-FIELD
120	SC104HGT2R1	T2	R1	G	100MHz-200MHz	SAS-200/540	ACD-10R		HORIZONTAL	SITE CALIBRATION E-FIELD
121	SC104HHT2R1	T2	R1	H	200MHz-400MHz	LPA-30	ACD-10R		HORIZONTAL	SITE CALIBRATION E-FIELD
122	SC104HIT2R1	T2	R1	I	400MHz-1GHz	LPA-30	ACD-10R		HORIZONTAL	SITE CALIBRATION E-FIELD
123	SC104HJT2R1	T2	R1	J	1GHz-2GHz	RGA-60	TECOM		HORIZONTAL	SITE CALIBRATION E-FIELD
124	SC104HKT2R1	T2	R1	K	2GHz-4GHz	RGA-60	TECOM		HORIZONTAL	SITE CALIBRATION E-FIELD
125	SC104HLT2R1	T2	R1	L	4GHz-6GHz	RGA-60	TECOM		HORIZONTAL	SITE CALIBRATION E-FIELD
126	SC104HMT2R1	T2	R1	M	6GHz-8GHz	RGA-60	TECOM		HORIZONTAL	SITE CALIBRATION E-FIELD
127	SC104HNT2R1	T2	R1	N	8GHz-10GHz	RGA-60	TECOM		HORIZONTAL	SITE CALIBRATION E-FIELD
128	SC104HOT2R1	T2	R1	O	10GHz-18GHz	RGA-60	TECOM		HORIZONTAL	SITE CALIBRATION E-FIELD
129	SC106VAT2R2	T2	R2	A	10 kHZ-500kHz	PEA-30	SAS-200/550		VERTICAL	SITE CALIBRATION E-FIELD
130	SC106VBT2R2	T2	R2	B	500kHz-2MHz	PEA-30	SAS-200/550		VERTICAL	SITE CALIBRATION E-FIELD
131	SC106VCT2R2	T2	R2	C	2MHz-10MHz	PEA-30	SAS-200/550		VERTICAL	SITE CALIBRATION E-FIELD
132	SC106VDT2R2	T2	R2	D	10MHz-20MHz	PEA-30	SAS-200/550		VERTICAL	SITE CALIBRATION E-FIELD

S-76 SCAL TEST DEFI

	A	C	D	E	F	G	H	I	J	K
1					S-76 HGRE TEST DEFINITION MATRIX					
2										
3	TEST IDENTIFICATION NO.	TX LOCATION	RX LOCATION	BAND	FREQUENCY RANGE	TX ANTENNA	RX ANTENNA	PROBE LOC.	ANTENNA POLARIZATION	TYPE OF TEST
4										
133	SC106VET2R2	T2	R2	E	20Mhz-30MHz	PEA-30	SAS-200/550		VERTICAL	SITE CALIBRATION E-FIELD
134	SC106VFT2R2	T2	R2	F	30MHz-100MHz	SAS-200/540	SAS-200/550		VERTICAL	SITE CALIBRATION E-FIELD
135	SC106VGT2R2	T2	R2	G	100MHz-200MHz	SAS-200/540	ACD-10R		VERTICAL	SITE CALIBRATION E-FIELD
136	SC106VHT2R2	T2	R2	H	200MHz-400MHz	LPA-30	ACD-10R		VERTICAL	SITE CALIBRATION E-FIELD
137	SC106VIT2R2	T2	R2	I	400MHz-1GHz	LPA-30	ACD-10R		VERTICAL	SITE CALIBRATION E-FIELD
138	SC106VJT2R2	T2	R2	J	1GHz-2GHz	RGA-60	TECOM		VERTICAL	SITE CALIBRATION E-FIELD
139	SC106VKT2R2	T2	R2	K	2GHz-4GHz	RGA-60	TECOM		VERTICAL	SITE CALIBRATION E-FIELD
140	SC106VLT2R2	T2	R2	L	4GHz-6GHz	RGA-60	TECOM		VERTICAL	SITE CALIBRATION E-FIELD
141	SC106VMT2R2	T2	R2	M	6GHz-8GHz	RGA-60	TECOM		VERTICAL	SITE CALIBRATION E-FIELD
142	SC106VNT2R2	T2	R2	N	8GHz-10GHz	RGA-60	TECOM		VERTICAL	SITE CALIBRATION E-FIELD
143	SC106VOT2R2	T2	R2	O	10GHz-18GHz	RGA-60	TECOM		VERTICAL	SITE CALIBRATION E-FIELD
144	SC106HAT2R2	T2	R2	A	10kHZ-500kHz	PEA-30	SAS-200/550		HORIZONTAL	SITE CALIBRATION E-FIELD
145	SC106HBT2R2	T2	R2	B	500kHz-2MHz	PEA-30	SAS-200/550		HORIZONTAL	SITE CALIBRATION E-FIELD
146	SC106HCT2R2	T2	R2	C	2MHz-10MHz	PEA-30	SAS-200/550		HORIZONTAL	SITE CALIBRATION E-FIELD
147	SC106HDT2R2	T2	R2	D	10MHz-20MHz	PEA-30	SAS-200/550		HORIZONTAL	SITE CALIBRATION E-FIELD
148	SC106HET2R2	T2	R2	E	20Mhz-30MHz	PEA-30	SAS-200/550		HORIZONTAL	SITE CALIBRATION E-FIELD
149	SC106HFT2R2	T2	R2	F	30MHz-100MHz	SAS-200/540	SAS-200/550		HORIZONTAL	SITE CALIBRATION E-FIELD
150	SC106HGT2R2	T2	R2	G	100MHz-200MHz	SAS-200/540	ACD-10R		HORIZONTAL	SITE CALIBRATION E-FIELD
151	SC106HHT2R2	T2	R2	H	200MHz-400MHz	LPA-30	ACD-10R		HORIZONTAL	SITE CALIBRATION E-FIELD
152	SC106HIT2R2	T2	R2	I	400MHz-1GHz	LPA-30	ACD-10R		HORIZONTAL	SITE CALIBRATION E-FIELD
153	SC106HJT2R2	T2	R2	J	1GHz-2GHz	RGA-60	TECOM		HORIZONTAL	SITE CALIBRATION E-FIELD
154	SC106HKT2R2	T2	R2	K	2GHz-4GHz	RGA-60	TECOM		HORIZONTAL	SITE CALIBRATION E-FIELD
155	SC106HLT2R2	T2	R2	L	4GHz-6GHz	RGA-60	TECOM		HORIZONTAL	SITE CALIBRATION E-FIELD
156	SC106HMT2R2	T2	R2	M	6GHz-8GHz	RGA-60	TECOM		HORIZONTAL	SITE CALIBRATION E-FIELD
157	SC106HNT2R2	T2	R2	N	8GHz-10GHz	RGA-60	TECOM		HORIZONTAL	SITE CALIBRATION E-FIELD
158	SC106HOT2R2	T2	R2	O	10GHz-18GHz	RGA-60	TECOM		HORIZONTAL	SITE CALIBRATION E-FIELD

	A	C	D	E	F	G	H	I	J	K
1					S-76 HSRF TEST DEFINITION MATRIX					
2										
3	TEST IDENTIFICATION NO.	TX LOCATION	RX LOCATION	BAND	FREQUENCY RANGE	TX ANTENNA	RX ANTENNA	PROBE LOC.	ANTENNA POLARIZATION	TYPE OF TEST
4										
4										
5	LLSC									
6	E-FIELD									
7	EF101VAT1R1	T1	R1	A	10 kHZ-500kHz	PEA-30	SAS-200/550		VERTICAL	E-FIELD
8	EF101VBT1R1	T1	R1	B	500kHz-2MHz	PEA-30	SAS-200/550		VERTICAL	E-FIELD
9	EF101VCT1R1	T1	R1	C	2MHz-10MHz	PEA-30	SAS-200/550		VERTICAL	E-FIELD
10	EF101VDT1R1	T1	R1	D	10MHz-20MHz	PEA-30	SAS-200/550		VERTICAL	E-FIELD
11	EF101VET1R1	T1	R1	E	20Mhz-30MHz	PEA-30	SAS-200/550		VERTICAL	E-FIELD
12	EF101VFT1R1	T1	R1	F	30MHz-100MHz	SAS-200/540	SAS-200/550		VERTICAL	E-FIELD
13	EF101VGT1R1	T1	R1	G	100MHz-200MHz	SAS-200/540	ACD-10R		VERTICAL	E-FIELD
14	EF101VHT1R1	T1	R1	H	200MHz-400MHz	LPA-30	ACD-10R		VERTICAL	E-FIELD
15	EF101VIT1R1	T1	R1	I	400MHz-1GHz	LPA-30	ACD-10R		VERTICAL	E-FIELD
16	EF101VJT1R1	T1	R1	J	1GHz-2GHz	RGA-60	TECOM		VERTICAL	E-FIELD
17	EF101VKT1R1	T1	R1	K	2GHz-4GHz	RGA-60	TECOM		VERTICAL	E-FIELD
18	EF101VLT1R1	T1	R1	L	4GHz-6GHz	RGA-60	TECOM		VERTICAL	E-FIELD
19	EF101VMT1R1	T1	R1	M	6GHz-8GHz	RGA-60	TECOM		VERTICAL	E-FIELD
20	EF101VNT1R1	T1	R1	N	8GHz-10GHz	RGA-60	TECOM		VERTICAL	E-FIELD
21	EF101VOT1R1	T1	R1	O	10GHz-18GHz	RGA-60	TECOM		VERTICAL	E-FIELD
22	EF101HAT1R1	T1	R1	A	10 kHZ-500kHz	PEA-30	SAS-200/550		HORIZONTAL	E-FIELD
23	EF101HBT1R1	T1	R1	B	500kHz-2MHz	PEA-30	SAS-200/550		HORIZONTAL	E-FIELD
24	EF101HCT1R1	T1	R1	C	2MHz-10MHz	PEA-30	SAS-200/550		HORIZONTAL	E-FIELD
25	EF101HDT1R1	T1	R1	D	10MHz-20MHz	PEA-30	SAS-200/550		HORIZONTAL	E-FIELD
26	EF101HET1R1	T1	R1	E	20Mhz-30MHz	PEA-30	SAS-200/550		HORIZONTAL	E-FIELD
27	EF101HFT1R1	T1	R1	F	30MHz-100MHz	SAS-200/540	SAS-200/550		HORIZONTAL	E-FIELD
28	EF101HGT1R1	T1	R1	G	100MHz-200MHz	SAS-200/540	ACD-10R		HORIZONTAL	E-FIELD
29	EF101HHT1R1	T1	R1	H	200MHz-400MHz	LPA-30	ACD-10R		HORIZONTAL	E-FIELD
30	EF101HIT1R1	T1	R1	I	400MHz-1GHz	LPA-30	ACD-10R		HORIZONTAL	E-FIELD
31	BT102VAT1R4A	T1	R4A	A	10 kHZ-500kHz	PEA-30	SAS-200/550		VERTICAL	CABLE CURRENT AND E-FIELD
32	BT102VBT1R4A	T1	R4A	B	500kHz-2MHz	PEA-30	SAS-200/550		VERTICAL	CABLE CURRENT AND E-FIELD
33	BT102VCT1R4A	T1	R4A	C	2MHz-10MHz	PEA-30	SAS-200/550		VERTICAL	CABLE CURRENT AND E-FIELD
34	BT102VDT1R4A	T1	R4A	D	10MHz-20MHz	PEA-30	SAS-200/550		VERTICAL	CABLE CURRENT AND E-FIELD
35	BT102VET1R4A	T1	R4A	E	20Mhz-30MHz	PEA-30	SAS-200/550		VERTICAL	CABLE CURRENT AND E-FIELD
36	BT102VFT1R4A	T1	R4A	F	30MHz-100MHz	SAS-200/540	SAS-200/550		VERTICAL	CABLE CURRENT AND E-FIELD
37	BT102VGT1R4A	T1	R4A	G	100MHz-200MHz	SAS-200/540	ACD-10R		VERTICAL	CABLE CURRENT AND E-FIELD
38	BT102VHT1R4A	T1	R4A	H	200MHz-400MHz	LPA-30	ACD-10R		VERTICAL	CABLE CURRENT AND E-FIELD
39	EF102VIT1R4A	T1	R4A	I	400MHz-1GHz	LPA-30	ACD-10R		VERTICAL	E-FIELD
40	EF102VJT1R4A	T1	R4A	J	1GHz-2GHz	RGA-60	TECOM		VERTICAL	E-FIELD
41	EF102VKT1R4A	T1	R4A	K	2GHz-4GHz	RGA-60	TECOM		VERTICAL	E-FIELD
42	EF102VLT1R4A	T1	R4A	L	4GHz-6GHz	RGA-60	TECOM		VERTICAL	E-FIELD
43	EF102VMT1R4A	T1	R4A	M	6GHz-8GHz	RGA-60	TECOM		VERTICAL	E-FIELD
44	EF102VNT1R4A	T1	R4A	N	8GHz-10GHz	RGA-60	TECOM		VERTICAL	E-FIELD
45	EF102VOT1R4A	T1	R4A	O	10GHz-18GHz	RGA-60	TECOM		VERTICAL	E-FIELD
46	BT102HAT1R4A	T1	R4A	A	10 kHZ-500kHz	PEA-30	SAS-200/550		HORIZONTAL	CABLE CURRENT AND E-FIELD
47	BT102HBT1R4A	T1	R4A	B	500kHz-2MHz	PEA-30	SAS-200/550		HORIZONTAL	CABLE CURRENT AND E-FIELD
48	BT102HCT1R4A	T1	R4A	C	2MHz-10MHz	PEA-30	SAS-200/550		HORIZONTAL	CABLE CURRENT AND E-FIELD
49	BT102HDT1R4A	T1	R4A	D	10MHz-20MHz	PEA-30	SAS-200/550		HORIZONTAL	CABLE CURRENT AND E-FIELD
50	BT102HET1R4A	T1	R4A	E	20Mhz-30MHz	PEA-30	SAS-200/550		HORIZONTAL	CABLE CURRENT AND E-FIELD
51	BT102HFT1R4A	T1	R4A	F	30MHz-100MHz	SAS-200/540	SAS-200/550		HORIZONTAL	CABLE CURRENT AND E-FIELD
52	BT102HGT1R4A	T1	R4A	G	100MHz-200MHz	SAS-200/540	ACD-10R		HORIZONTAL	CABLE CURRENT AND E-FIELD
53	BT102HHT1R4A	T1	R4A	H	200MHz-400MHz	LPA-30	ACD-10R		HORIZONTAL	CABLE CURRENT AND E-FIELD
54	EF102HIT1R4A	T1	R4A	I	400MHz-1GHz	LPA-30	ACD-10R		HORIZONTAL	E-FIELD
55	BT103VAT1R4B	T1	R4B	A	10 kHZ-500kHz	PEA-30	SAS-200/550		VERTICAL	CABLE CURRENT AND E-FIELD
56	BT103VBT1R4B	T1	R4B	B	500kHz-2MHz	PEA-30	SAS-200/550		VERTICAL	CABLE CURRENT AND E-FIELD
57	BT103VCT1R4B	T1	R4B	C	2MHz-10MHz	PEA-30	SAS-200/550		VERTICAL	CABLE CURRENT AND E-FIELD
58	BT103VDT1R4B	T1	R4B	D	10MHz-20MHz	PEA-30	SAS-200/550		VERTICAL	CABLE CURRENT AND E-FIELD
59	BT103VET1R4B	T1	R4B	E	20Mhz-30MHz	PEA-30	SAS-200/550		VERTICAL	CABLE CURRENT AND E-FIELD
60	BT103VFT1R4B	T1	R4B	F	30MHz-100MHz	SAS-200/540	SAS-200/550		VERTICAL	CABLE CURRENT AND E-FIELD
61	BT103VGT1R4B	T1	R4B	G	100MHz-200MHz	SAS-200/540	ACD-10R		VERTICAL	CABLE CURRENT AND E-FIELD
62	BT103VHT1R4B	T1	R4B	H	200MHz-400MHz	LPA-30	ACD-10R		VERTICAL	CABLE CURRENT AND E-FIELD
63	EF103VIT1R4B	T1	R4B	I	400MHz-1GHz	LPA-30	ACD-10R		VERTICAL	E-FIELD
64	EF103VJT1R4B	T1	R4B	J	1GHz-2GHz	RGA-60	TECOM		VERTICAL	E-FIELD
65	EF103VKT1R4B	T1	R4B	K	2GHz-4GHz	RGA-60	TECOM		VERTICAL	E-FIELD
66	EF103VLT1R4B	T1	R4B	L	4GHz-6GHz	RGA-60	TECOM		VERTICAL	E-FIELD
67	EF103VMT1R4B	T1	R4B	M	6GHz-8GHz	RGA-60	TECOM		VERTICAL	E-FIELD

S-76 LLSC-I T1 DEFINITION

	A	C	D	E	F	G	H	I	J	K
1					S-76 HERE TEST DEFINITION MATRIX					
2										
3	TEST IDENTIFICATION NO.	TX LOCATION	RX LOCATION	BAND	FREQUENCY RANGE	TX ANTENNA	RX ANTENNA	PROBE LOC.	ANTENNA POLARIZATION	TYPE OF TEST
4										
68	EF103VNT1R4B	T1	R4B	N	8GHz-10GHz	RGA-60	TECOM		VERTICAL	E-FIELD
69	EF103VOT1R4B	T1	R4B	O	10GHz-18GHz	RGA-60	TECOM		VERTICAL	E-FIELD
70	BT103HAT1R4B	T1	R4B	A	10 kHZ-500kHz	PEA-30	SAS-200/550		HORIZONTAL	CABLE CURRENT AND E-FIELD
71	BT103HBT1R4B	T1	R4B	B	500kHz-2MHz	PEA-30	SAS-200/550		HORIZONTAL	CABLE CURRENT AND E-FIELD
72	BT103HCT1R4B	T1	R4B	C	2MHz-10MHz	PEA-30	SAS-200/550		HORIZONTAL	CABLE CURRENT AND E-FIELD
73	BT103HDT1R4B	T1	R4B	D	10MHz-20MHz	PEA-30	SAS-200/550		HORIZONTAL	CABLE CURRENT AND E-FIELD
74	BT103HET1R4B	T1	R4B	E	20Mhz-30MHz	PEA-30	SAS-200/550		HORIZONTAL	CABLE CURRENT AND E-FIELD
75	BT103HFT1R4B	T1	R4B	F	30MHz-100MHz	SAS-200/540	SAS-200/550		HORIZONTAL	CABLE CURRENT AND E-FIELD
76	BT103HGT1R4B	T1	R4B	G	100MHz-200MHz	SAS-200/540	ACD-10R		HORIZONTAL	CABLE CURRENT AND E-FIELD
77	BT103HHT1R4B	T1	R4B	H	200MHz-400MHz	LPA-30	ACD-10R		HORIZONTAL	CABLE CURRENT AND E-FIELD
78	EF103HIT1R4B	T1	R4B	I	400MHz-1GHz	LPA-30	ACD-10R		HORIZONTAL	E-FIELD
79	CC104VAT1R5	T1	R5	A	10 kHZ-500kHz	PEA-30	SAS-200/550		VERTICAL	CABLE CURRENT
80	CC104VBT1R5	T1	R5	B	500kHz-2MHz	PEA-30	SAS-200/550		VERTICAL	CABLE CURRENT
81	CC104VCT1R5	T1	R5	C	2MHz-10MHz	PEA-30	SAS-200/550		VERTICAL	CABLE CURRENT
82	CC104VDT1R5	T1	R5	D	10MHz-20MHz	PEA-30	SAS-200/550		VERTICAL	CABLE CURRENT
83	CC104VET1R5	T1	R5	E	20Mhz-30MHz	PEA-30	SAS-200/550		VERTICAL	CABLE CURRENT
84	CC104VFT1R5	T1	R5	F	30MHz-100MHz	SAS-200/540	SAS-200/550		VERTICAL	CABLE CURRENT
85	CC104VGT1R5	T1	R5	G	100MHz-200MHz	SAS-200/540	ACD-10R		VERTICAL	CABLE CURRENT
86	CC104VHT1R5	T1	R5	H	200MHz-400MHz	LPA-30	ACD-10R		VERTICAL	CABLE CURRENT
87	CC104HAT1R5	T1	R5	A	10 kHZ-500kHz	PEA-30	SAS-200/550		HORIZONTAL	CABLE CURRENT
88	CC104HBT1R5	T1	R5	B	500kHz-2MHz	PEA-30	SAS-200/550		HORIZONTAL	CABLE CURRENT
89	CC104HCT1R5	T1	R5	C	2MHz-10MHz	PEA-30	SAS-200/550		HORIZONTAL	CABLE CURRENT
90	CC104HDT1R5	T1	R5	D	10MHz-20MHz	PEA-30	SAS-200/550		HORIZONTAL	CABLE CURRENT
91	CC104HET1R5	T1	R5	E	20Mhz-30MHz	PEA-30	SAS-200/550		HORIZONTAL	CABLE CURRENT
92	CC104HFT1R5	T1	R5	F	30MHz-100MHz	SAS-200/540	SAS-200/550		HORIZONTAL	CABLE CURRENT
93	CC104HGT1R5	T1	R5	G	100MHz-200MHz	SAS-200/540	ACD-10R		HORIZONTAL	CABLE CURRENT
94	CC104HHT1R5	T1	R5	H	200MHz-400MHz	LPA-30	ACD-10R		HORIZONTAL	CABLE CURRENT

	A	C	D	E	F	G	H	I	J	K
1					S-76 HERF TEST DEFINITION MATRIX					
2										
3	TEST IDENTIFICATION NO.	TX LOCATION	RX LOCATION	BAND	FREQUENCY RANGE	TX ANTENNA	RX ANTENNA	PROBE LOC.	ANTENNA POLARIZATION	TYPE OF TEST
4										
4										
5	LLSC									
6	EF201VAT2R1	T2	R1	A	10 kHZ-500kHz	PEA-30	SAS-200/550		VERTICAL	E-FIELD
7	EF201VBT2R1	T2	R1	B	500kHz-2MHz	PEA-30	SAS-200/550		VERTICAL	E-FIELD
8	EF101VCT2R1	T2	R1	C	2MHz-10MHz	PEA-30	SAS-200/550		VERTICAL	E-FIELD
9	EF201VDT2R1	T2	R1	D	10MHz-20MHz	PEA-30	SAS-200/550		VERTICAL	E-FIELD
10	EF201VET2R1	T2	R1	E	20Mhz-30MHz	PEA-30	SAS-200/550		VERTICAL	E-FIELD
11	EF201VFT2R1	T2	R1	F	30MHz-100MHz	SAS-200/540	SAS-200/550		VERTICAL	E-FIELD
12	EF201VGT2R1	T2	R1	G	100MHz-200MHz	SAS-200/540	ACD-10R		VERTICAL	E-FIELD
13	EF102VHT2R1	T2	R1	H	200MHz-400MHz	LPA-30	ACD-10R		VERTICAL	E-FIELD
14	EF201VIT2R1	T2	R1	I	400MHz-1GHz	LPA-30	ACD-10R		VERTICAL	E-FIELD
15	EF201VJT2R1	T2	R1	J	1GHz-2GHz	RGA-60	TECOM		VERTICAL	E-FIELD
16	EF201VKT2R1	T2	R1	K	2GHz-4GHz	RGA-60	TECOM		VERTICAL	E-FIELD
17	EF201VLT2R1	T2	R1	L	4GHz-6GHz	RGA-60	TECOM		VERTICAL	E-FIELD
18	EF201VMT2R1	T2	R1	M	6GHz-8GHz	RGA-60	TECOM		VERTICAL	E-FIELD
19	EF201VNT1R1	T1	R1	N	8GHz-10GHz	RGA-60	TECOM		VERTICAL	E-FIELD
20	EF201VOT2R1	T2	R1	O	10GHz-18GHz	RGA-60	TECOM		VERTICAL	E-FIELD
21	EF201HAT2R1	T2	R1	A	10 kHZ-500kHz	PEA-30	SAS-200/550		HORIZONTAL	E-FIELD
22	EF201HBT2R1	T2	R1	B	500kHz-2MHz	PEA-30	SAS-200/550		HORIZONTAL	E-FIELD
23	EF201HCT2R1	T2	R1	C	2MHz-10MHz	PEA-30	SAS-200/550		HORIZONTAL	E-FIELD
24	EF201HDT2R1	T2	R1	D	10MHz-20MHz	PEA-30	SAS-200/550		HORIZONTAL	E-FIELD
25	EF201HET2R1	T2	R1	E	20Mhz-30MHz	PEA-30	SAS-200/550		HORIZONTAL	E-FIELD
26	EF201HFT2R1	T2	R1	F	30MHz-100MHz	SAS-200/540	SAS-200/550		HORIZONTAL	E-FIELD
27	EF201HGT2R1	T2	R1	G	100MHz-200MHz	SAS-200/540	ACD-10R		HORIZONTAL	E-FIELD
28	EF201HHT2R1	T2	R1	H	200MHz-400MHz	LPA-30	ACD-10R		HORIZONTAL	E-FIELD
29	EF201HIT2R1	T2	R1	I	400MHz-1GHz	LPA-30	ACD-10R		HORIZONTAL	E-FIELD
30	BT202VAT2R4A	T2	R4A	A	10 kHZ-500kHz	PEA-30	SAS-200/550		VERTICAL	CABLE CURRENT AND E-FIELD
31	BT202VBT2R4A	T2	R4A	B	500kHz-2MHz	PEA-30	SAS-200/550		VERTICAL	CABLE CURRENT AND E-FIELD
32	BT202VCT2R4A	T2	R4A	C	2MHz-10MHz	PEA-30	SAS-200/550		VERTICAL	CABLE CURRENT AND E-FIELD
33	BT202VDT2R4A	T2	R4A	D	10MHz-20MHz	PEA-30	SAS-200/550		VERTICAL	CABLE CURRENT AND E-FIELD
34	BT202VET2R4A	T2	R4A	E	20Mhz-30MHz	PEA-30	SAS-200/550		VERTICAL	CABLE CURRENT AND E-FIELD
35	BT202VFT2R4A	T2	R4A	F	30MHz-100MHz	SAS-200/540	SAS-200/550		VERTICAL	CABLE CURRENT AND E-FIELD
36	BT202VGT2R4A	T2	R4A	G	100MHz-200MHz	SAS-200/540	ACD-10R		VERTICAL	CABLE CURRENT AND E-FIELD
37	BT202VHT2R4A	T2	R4A	H	200MHz-400MHz	LPA-30	ACD-10R		VERTICAL	CABLE CURRENT AND E-FIELD
38	EF202VIT2R4A	T2	R4A	I	400MHz-1GHz	LPA-30	ACD-10R		VERTICAL	E-FIELD
39	EF202VJT2R4A	T2	R4A	J	1GHz-2GHz	RGA-60	TECOM		VERTICAL	E-FIELD
40	EF202VKT2R4A	T2	R4A	K	2GHz-4GHz	RGA-60	TECOM		VERTICAL	E-FIELD
41	EF202VLT2R4A	T2	R4A	L	4GHz-6GHz	RGA-60	TECOM		VERTICAL	E-FIELD
42	EF202VMT2R4A	T2	R4A	M	6GHz-8GHz	RGA-60	TECOM		VERTICAL	E-FIELD
43	EF202VNT2R4A	T2	R4A	N	8GHz-10GHz	RGA-60	TECOM		VERTICAL	E-FIELD
44	EF202VOT2R4A	T2	R4A	O	10GHz-18GHz	RGA-60	TECOM		VERTICAL	E-FIELD
45	BT202HAT2R4A	T2	R4A	A	10 kHZ-500kHz	PEA-30	SAS-200/550		HORIZONTAL	CABLE CURRENT AND E-FIELD
46	BT202HBT2R4A	T2	R4A	B	500kHz-2MHz	PEA-30	SAS-200/550		HORIZONTAL	CABLE CURRENT AND E-FIELD
47	BT202HCT2R4A	T2	R4A	C	2MHz-10MHz	PEA-30	SAS-200/550		HORIZONTAL	CABLE CURRENT AND E-FIELD
48	BT202HDT2R4A	T2	R4A	D	10MHz-20MHz	PEA-30	SAS-200/550		HORIZONTAL	CABLE CURRENT AND E-FIELD
49	BT202HET2R4A	T2	R4A	E	20Mhz-30MHz	PEA-30	SAS-200/550		HORIZONTAL	CABLE CURRENT AND E-FIELD
50	BT202HFT2R4A	T2	R4A	F	30MHz-100MHz	SAS-200/540	SAS-200/550		HORIZONTAL	CABLE CURRENT AND E-FIELD
51	BT202HGT2R4A	T2	R4A	G	100MHz-200MHz	SAS-200/540	ACD-10R		HORIZONTAL	CABLE CURRENT AND E-FIELD
52	BT202HHT2R4A	T2	R4A	H	200MHz-400MHz	LPA-30	ACD-10R		HORIZONTAL	CABLE CURRENT AND E-FIELD
53	EF202HIT2R4A	T2	R4A	I	400MHz-1GHz	LPA-30	ACD-10R		HORIZONTAL	E-FIELD
54	BT103VAT2R4B	T2	R4B	A	10 kHZ-500kHz	PEA-30	SAS-200/550		VERTICAL	CABLE CURRENT AND E-FIELD
55	BT103VBT2R4B	T2	R4B	B	500kHz-2MHz	PEA-30	SAS-200/550		VERTICAL	CABLE CURRENT AND E-FIELD
56	BT103VCT2R4B	T2	R4B	C	2MHz-10MHz	PEA-30	SAS-200/550		VERTICAL	CABLE CURRENT AND E-FIELD
57	BT103VDT2R4B	T2	R4B	D	10MHz-20MHz	PEA-30	SAS-200/550		VERTICAL	CABLE CURRENT AND E-FIELD
58	BT103VET2R4B	T2	R4B	E	20Mhz-30MHz	PEA-30	SAS-200/550		VERTICAL	CABLE CURRENT AND E-FIELD
59	BT103VFT2R4B	T2	R4B	F	30MHz-100MHz	SAS-200/540	SAS-200/550		VERTICAL	CABLE CURRENT AND E-FIELD
60	BT103VGT2R4B	T2	R4B	G	100MHz-200MHz	SAS-200/540	ACD-10R		VERTICAL	CABLE CURRENT AND E-FIELD
61	BT103VHT2R4B	T2	R4B	H	200MHz-400MHz	LPA-30	ACD-10R		VERTICAL	CABLE CURRENT AND E-FIELD
62	EF103VIT2R4B	T2	R4B	I	400MHz-1GHz	LPA-30	ACD-10R		VERTICAL	E-FIELD
63	EF103VJT2R4B	T2	R4B	J	1GHz-2GHz	RGA-60	TECOM		VERTICAL	E-FIELD
64	EF103VKT2R4B	T2	R4B	K	2GHz-4GHz	RGA-60	TECOM		VERTICAL	E-FIELD
65	EF103VLT2R4B	T2	R4B	L	4GHz-6GHz	RGA-60	TECOM		VERTICAL	E-FIELD
66	EF103VMT2R4B	T2	R4B	M	6GHz-8GHz	RGA-60	TECOM		VERTICAL	E-FIELD
67	EF103VNT2R4B	T2	R4B	N	8GHz-10GHz	RGA-60	TECOM		VERTICAL	E-FIELD

B-76 LLSC-1 T2 DEFINITION

	A	C	D	E	F	G	H	I	J	K
1					B-76 HERF TEST DEFINITION MATRIX					
2										
3	TEST IDENTIFICATION NO.	TX LOCATION	RX LOCATION	BAND	FREQUENCY RANGE	TX ANTENNA	RX ANTENNA	PROBE LOC.	ANTENNA POLARIZATION	TYPE OF TEST
4										
68	EF103VOT2R4B	T2	R4B	O	10GHz-18GHz	RGA-60	TECOM		VERTICAL	E-FIELD
69	BT103HAT2R4B	T2	R4B	A	10 kHZ-500kHz	PEA-30	SAS-200/550		HORIZONTAL	CABLE CURRENT AND E-FIELD
70	BT103HBT2R4B	T2	R4B	B	500kHz-2MHz	PEA-30	SAS-200/550		HORIZONTAL	CABLE CURRENT AND E-FIELD
71	BT103HCT2R4B	T2	R4B	C	2MHz-10MHz	PEA-30	SAS-200/550		HORIZONTAL	CABLE CURRENT AND E-FIELD
72	BT103HDT2R4B	T2	R4B	D	10MHz-20MHz	PEA-30	SAS-200/550		HORIZONTAL	CABLE CURRENT AND E-FIELD
73	BT103HET2R4B	T2	R4B	E	20Mhz-30MHz	PEA-30	SAS-200/550		HORIZONTAL	CABLE CURRENT AND E-FIELD
74	BT103HFT2R4B	T2	R4B	F	30MHz-100MHz	SAS-200/540	SAS-200/550		HORIZONTAL	CABLE CURRENT AND E-FIELD
75	BT103HGT2R4B	T2	R4B	G	100MHz-200MHz	SAS-200/540	ACD-10R		HORIZONTAL	CABLE CURRENT AND E-FIELD
76	BT103HHT2R4B	T2	R4B	H	200MHz-400MHz	LPA-30	ACD-10R		HORIZONTAL	CABLE CURRENT AND E-FIELD
77	EF103HIT2R4B	T2	R4B	I	400MHz-1GHz	LPA-30	ACD-10R		HORIZONTAL	E-FIELD
78	CC104VAT2R5	T2	R5	A	10 kHZ-500kHz	PEA-30	SAS-200/550		VERTICAL	CABLE CURRENT
79	CC104VBT2R5	T2	R5	B	500kHz-2MHz	PEA-30	SAS-200/550		VERTICAL	CABLE CURRENT
80	CC104VCT2R5	T2	R5	C	2MHz-10MHz	PEA-30	SAS-200/550		VERTICAL	CABLE CURRENT
81	CC104VDT2R5	T2	R5	D	10MHz-20MHz	PEA-30	SAS-200/550		VERTICAL	CABLE CURRENT
82	CC104VET2R5	T2	R5	E	20Mhz-30MHz	PEA-30	SAS-200/550		VERTICAL	CABLE CURRENT
83	CC104VFT2R5	T2	R5	F	30MHz-100MHz	SAS-200/540	SAS-200/550		VERTICAL	CABLE CURRENT
84	CC104VGT2R5	T2	R5	G	100MHz-200MHz	SAS-200/540	ACD-10R		VERTICAL	CABLE CURRENT
85	CC104VHT2R5	T2	R5	H	200MHz-400MHz	LPA-30	ACD-10R		VERTICAL	CABLE CURRENT
86	CC104HAT2R5	T2	R5	A	10 kHZ-500kHz	PEA-30	SAS-200/550		HORIZONTAL	CABLE CURRENT
87	CC104HBT2R5	T2	R5	B	500kHz-2MHz	PEA-30	SAS-200/550		HORIZONTAL	CABLE CURRENT
88	CC104HCT2R5	T2	R5	C	2MHz-10MHz	PEA-30	SAS-200/550		HORIZONTAL	CABLE CURRENT
89	CC104HDT2R5	T2	R5	D	10MHz-20MHz	PEA-30	SAS-200/550		HORIZONTAL	CABLE CURRENT
90	CC104HET2R5	T2	R5	E	20Mhz-30MHz	PEA-30	SAS-200/550		HORIZONTAL	CABLE CURRENT
91	CC104HFT2R5	T2	R5	F	30MHz-100MHz	SAS-200/540	SAS-200/550		HORIZONTAL	CABLE CURRENT
92	CC104HGT2R5	T2	R5	G	100MHz-200MHz	SAS-200/540	ACD-10R		HORIZONTAL	CABLE CURRENT
93	CC104HHT2R5	T2	R5	H	200MHz-400MHz	LPA-30	ACD-10R		HORIZONTAL	CABLE CURRENT

S-76 LLSC-1 FB DEFINITION

	A	B	C	D	E	F	G	H	I	J	K
1						S-76 HERF TEST DEFINITION MATRIX					
2											
3	TEST IDENTIFICATION NO.	COUNT	TX LOCATION	RX LOCATION	BAND	FREQUENCY RANGE	TX ANTENNA	RX ANTENNA	PROBE LOC.	ANTENNA POLARIZATION	TYPE OF TEST
4											
5	LLSC										
6	AE100B?NAR1	1	NA	R1	?	TBD	#N/A	#N/A		N/A	FLY BY ATLANTIC CITY E-FILED
7	AE101V?NAR1	2	NA	R1	?	#N/A	#N/A	#N/A		VERTICAL	FLY BY ATLANTIC CITY E FILED
8	AE102H?NAR1	3	NA	R1	?	#N/A	#N/A	#N/A		HORIZONTAL	FLY BY ATLANTIC CITY E FILED
9	ME200BANAR1	4	NA	R1	A	10 kHZ-500kHz	PEA-30	SAS-200/550		N/A	FLY MAINE E-FIELD
10	ME201VANAR1	5	NA	R1	A	10 kHZ-500kHz	PEA-30	SAS-200/550		VERTICAL	FLY MAINE E-FIELD
11	ME202HANAR1	6	NA	R1	A	10 kHZ-500kHz	PEA-30	SAS-200/550		HORIZONTAL	FLY MAINE E-FIELD

APPENDIX D

FAA TRANSMITTER SITE DESCRIPTION AND OPERATIONAL CHARACTERISTICS

89124

AIRPORT DIAGRAM

AL-669(FAA)

ATLANTIC CITY INTL (ACY)
ATLANTIC CITY, NEW JERSEY

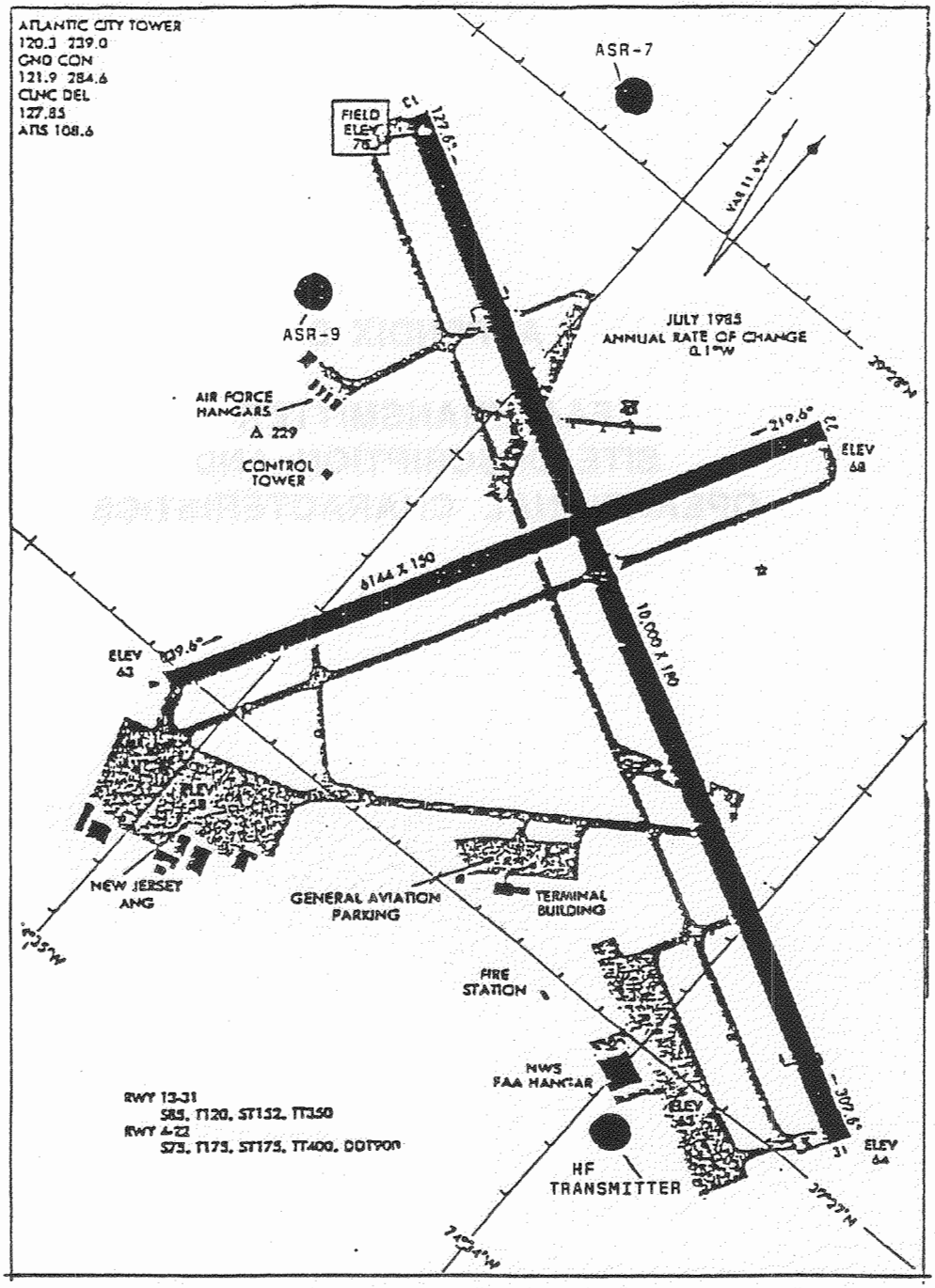

APPENDIX E

OTH-B RADAR SITE DESCRIPTION AND OPERATIONAL CHARACTERISTICS

1. Exact Location of Each Transmit Antenna

The center of each antenna is located as follows.

Sector 1:

Latitude:	45° 10' 29.98"N	4000 ft long
Longitude:	69° 51' 45.11"W	135 ft high
Boresight:	48.2° with respect to True North	

Sector 2:

Latitude:	45° 9' 40.57"N
Longitude:	69° 51' 17.33"W
Boresight:	108.0° with respect to True North

Sector 3:

Latitude:	45° 8' 26.46"N
Longitude:	69° 50' 17.70"W
Boresight:	161.8° with respect to True North

2. Frequency Range

The OTH-B radar is capable of operating on any frequency in the 5-28 MHz range. The frequency used in actual operation will vary since proper radar operation is dependent upon the condition of the ionosphere which changes as a function of time of day, Sunspot Number, and time of year. However, for purposes of this test, the transmitter can be made to operate on any frequency that is deemed appropriate within the 5-28 MHz region, as negotiated by the Air Force and the FAA.

3. Effective Radiated Power

The maximum Effective Radiated Power will vary from 93.8 MW at 5 MHz to 310 MW at 28 MHz. However, the radar is usually operated well below the maximum power levels.

4. Locus of Maximum Field Intensity

The altitude at which maximum radiated field intensity occurs will vary as a function of radiated frequency and ground range from the transmitted antenna. These data are presented in Table E-1.

E.1 Altitude for Maximum Field Intensity vs. Frequency

Altitude for Maximum Frequency (MHz)	Field Intensity (ft)
16.51 - 22.26 (E)	0.194R
5.00 - 6.74 (A)	0.364R
9.09 - 12.25 (C)	0.268R
12.25 - 16.51 (D)	0.249R
22.25 - 28.00 (F)	0.176R

R - Ground Distance from Aircraft to Transmit Antenna (ft)

5. Adequacy of Flight Restriction No. 86-31

Boston Air Traffic Control Center issued this Notice to Airmen on 30 July 1986 invoking temporary flight restrictions within a 5 nautical mile radius of the OTH-B transmitter in Moscow, ME, and below 5500 MSL.

This Notice to Airmen was reviewed regarding personnel hazard and verification has been made that this flight restriction is more than adequate to insure personnel safety from OTH-B radiations. The radiation level at the edge of the restricted air space is below the allowable limits established by the following governing standards.

a. AFOSH-161-9, 12 October 1984 — Exposure to RF Radiation

b. ANSI C-95.1, July 1982 — Safe Level of Electromagnetic Radiation with Respect to Personnel

Table E-2 compares the actual radiation level at 28 MHz (worst case) with the allowable level per the current standards and the level proposed by the EPA in July 1986.

Table E-1 Radiation Level at 28 MHz

Radiation Level * at Edge of Restricted Air Space	Allowable Radiation Level Per Current Standards	Proposed Allowable Radiation Level
0.28 mW/cm^2	1.1 mW/cm^2	0.11 mW/cm^2

*Radar operating at maximum power

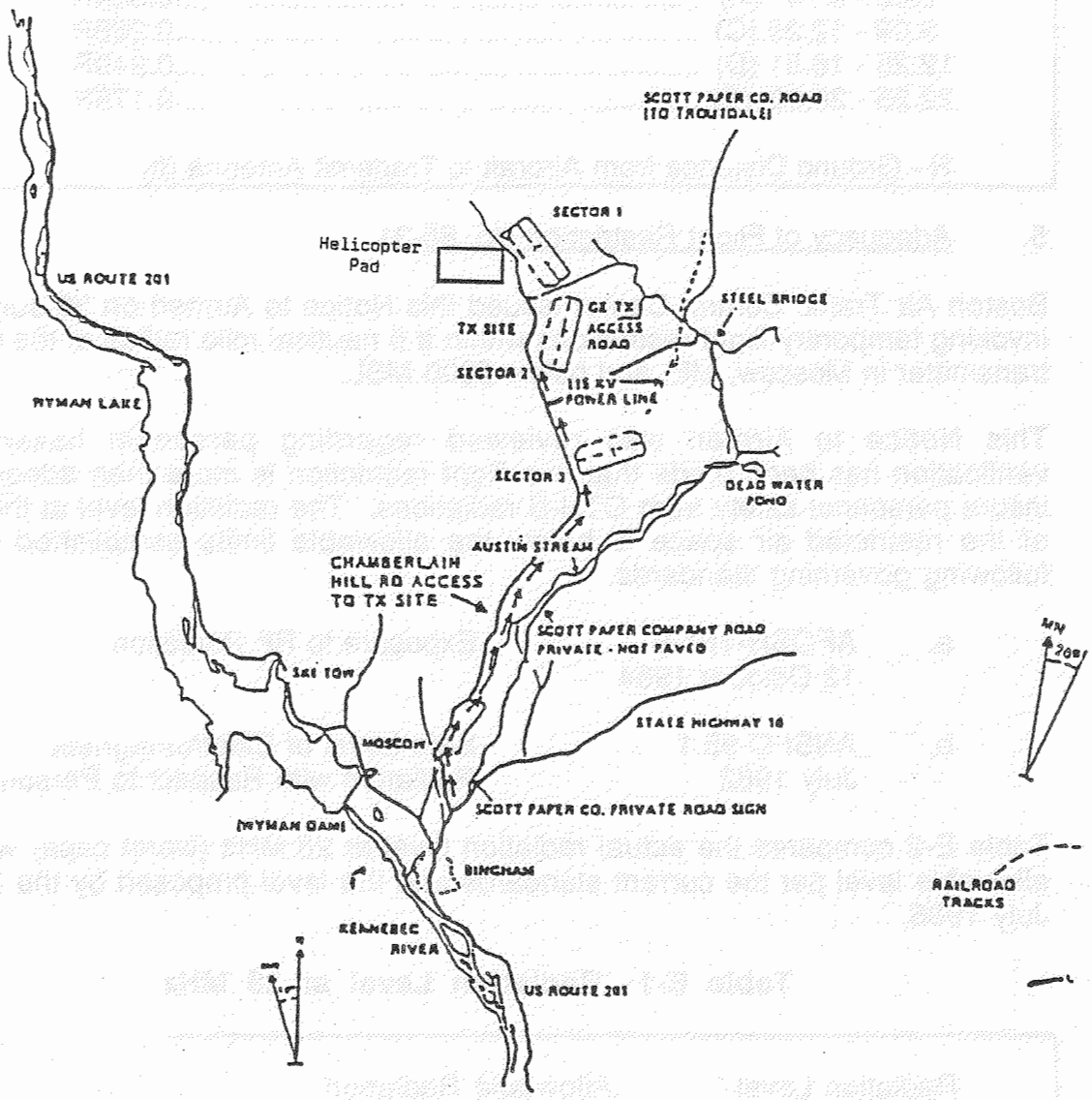
SCOTT PAPER CO. ROAD
(TO TROUTDALE)
SECTOR 1
Helicopter
Pad
US ROUTE 201
GE TX
ACCESS
ROAD
STEEL BRIDGE
TX SITE
SECTOR 2
115 KV
POWER LINE
WYMAN LAKE
SECTOR 3
DEAD WATER
POND
AUSTIN STREAM
CHAMBERLAIN
HILL RD ACCESS
TO TX SITE
SCOTT PAPER COMPANY ROAD
PRIVATE - NOT PAVED
SKI TOW
STATE HIGHWAY 16
MOSCOW
SCOTT PAPER CO. PRIVATE ROAD SIGN
(WYMAN DAM)
BINGHAM
RAILROAD
TRACKS
KENNEBEC
RIVER
US ROUTE 201
MN

IN399

Minimum Altitude Contours for a Constant Power Density of 11.5 W/m^2

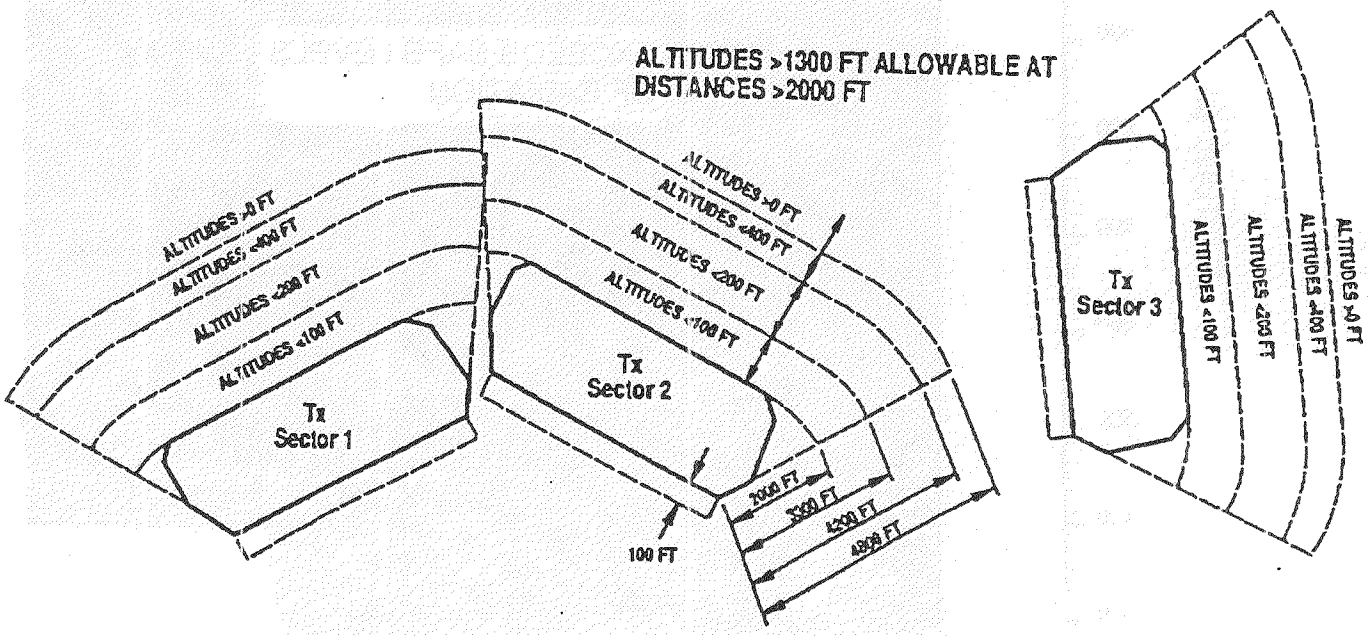

FREQUENCY = 28 MHz

$P_T G_T$ = 85 dBW (MAXIMUM PREDICTED)

ALLOWABLE RADIATION EXPOSURE = $\frac{9000}{r^2}$ = 11.5 W/m^2
(WORST CASE)

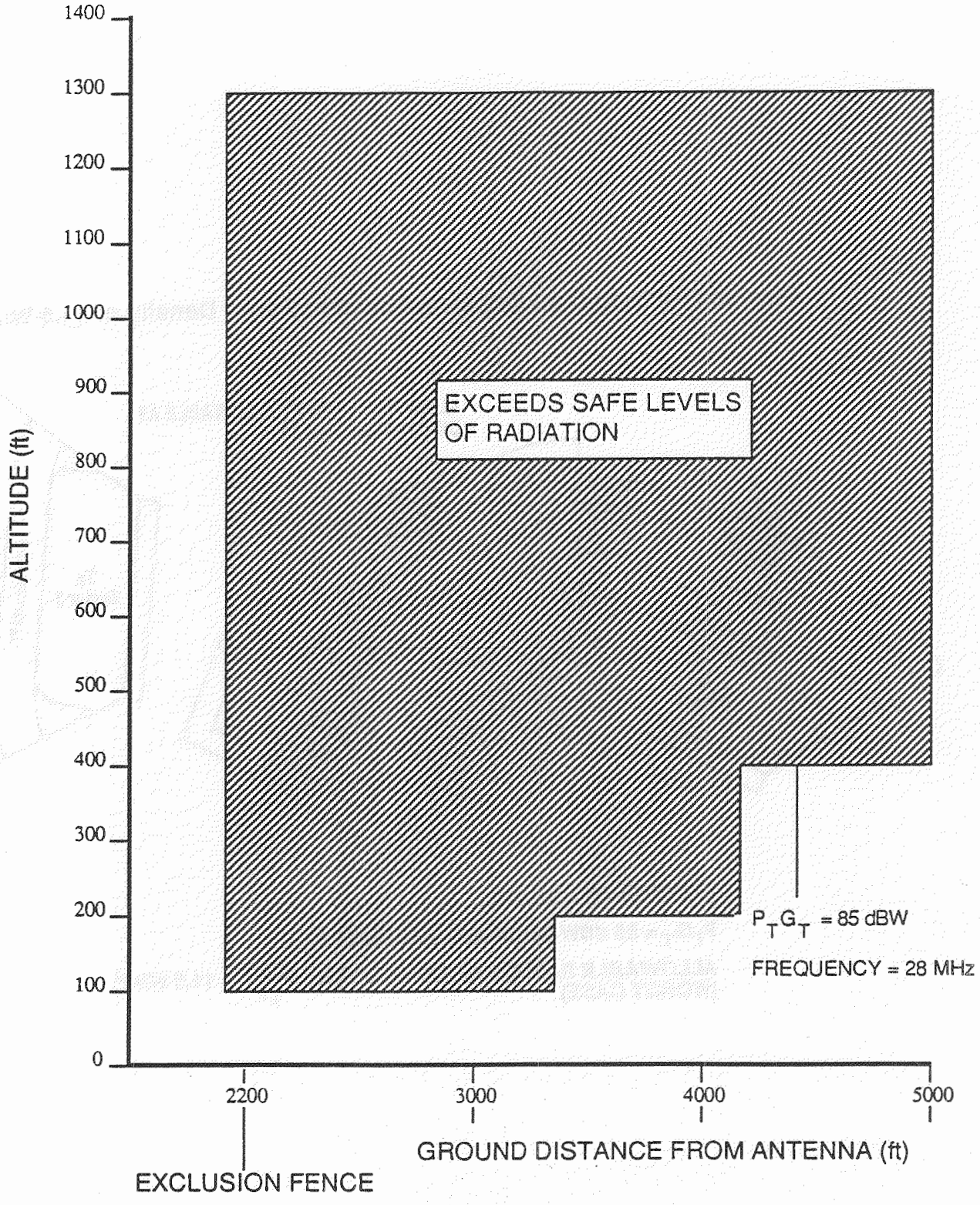
1400
1300
1200
1100
1000
900
800
700
600
500
400
300
200
100
0
ALTITUDE (ft)
EXCEEDS SAFE LEVELS OF RADIATION
$P_T G_T$ = 85 dBW
FREQUENCY = 28 MHz
2200
3000
4000
5000
GROUND DISTANCE FROM ANTENNA (ft)
EXCLUSION FENCE

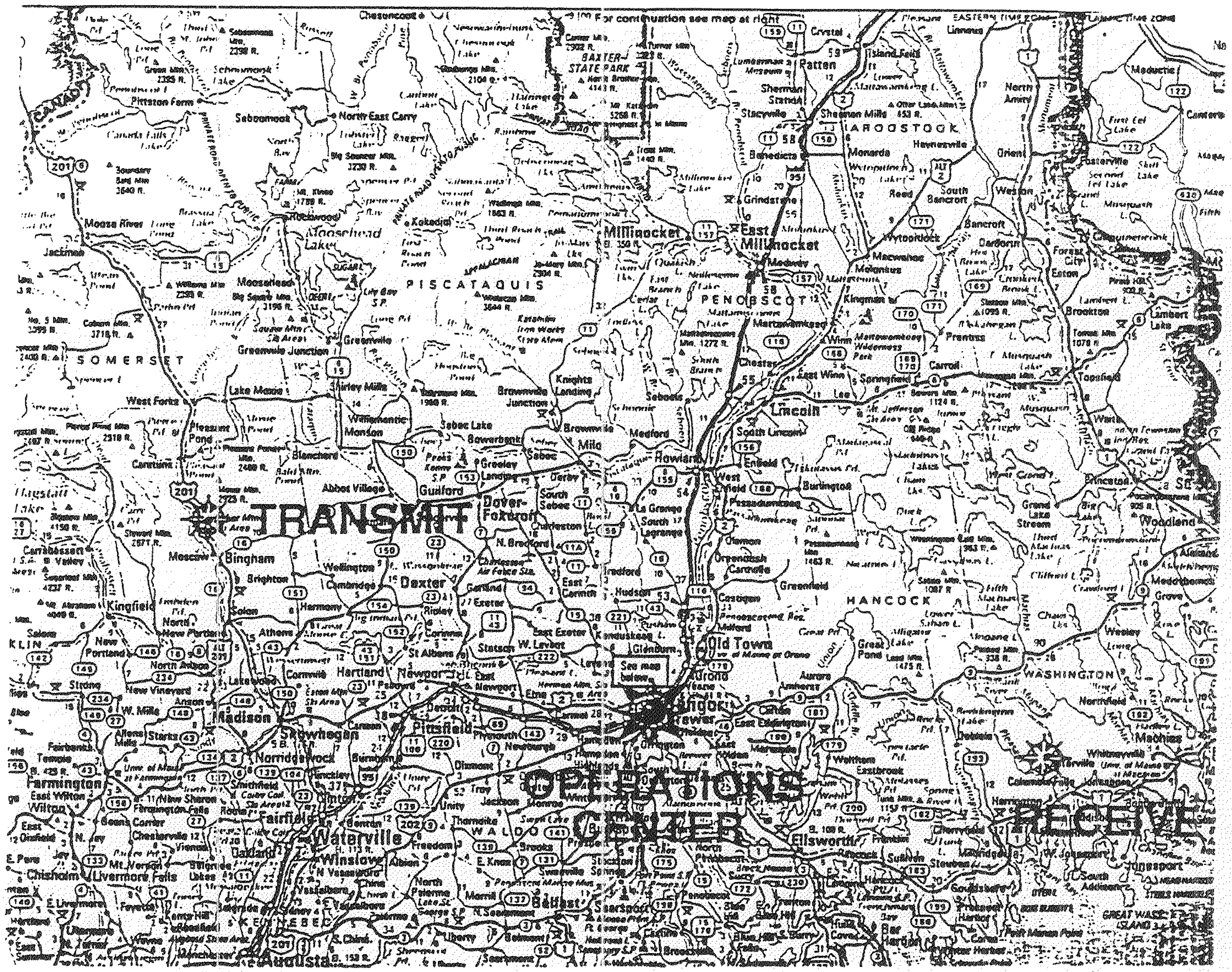
For continuation see map at right
BAXTER STATE PARK
EASTERN TIME ZONE
AROOSTOOK
PISCATAQUIS
PENOBSCOT
SOMERSET
HANCOCK
WASHINGTON
WALDO
KENNEBEC
Moosehead Lake
Millinocket
East Millinocket
Patten
Lincoln
Howland
Milo
Guilford
Dover-Foxcroft
Bingham
Dexter
Pittsfield
Madison
Skowhegan
Waterville
Winslow
Augusta
Old Town
Orono
Bangor
Brewer
Ellsworth
Belfast
Farmington
TRANSMIT
OPERATIONS CENTER
RECEIVE

APPENDIX F

PAVE PAWS RADAR SITE DESCRIPTION AND OPERATIONAL CHARACTERISTICS

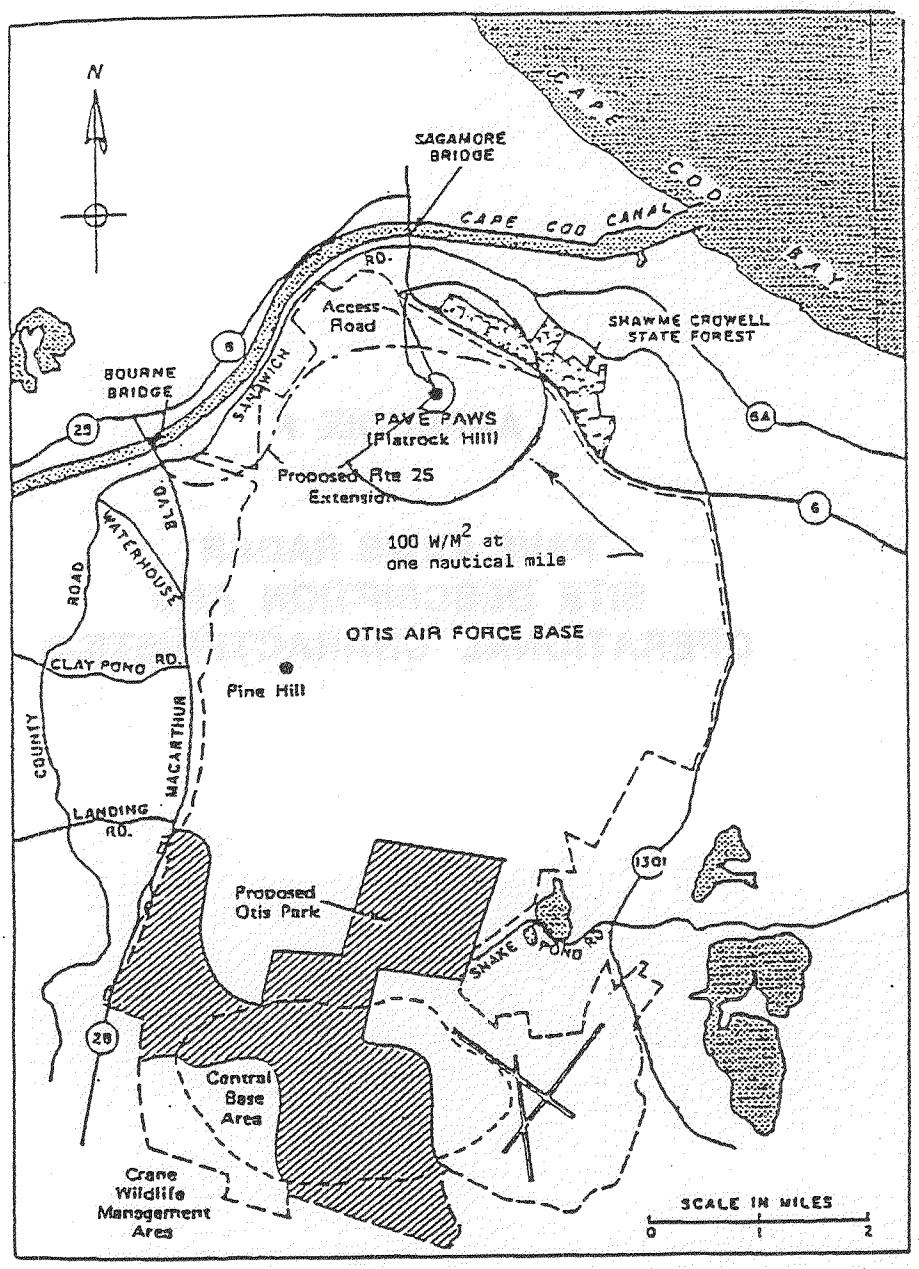

PROPOSED LAND USE PLANS AFFECTING
OTIS AIR FORCE BASE
(Information provided by Air Force Program Office at Hanscom AFB.)

APPENDIX G

SIKORSKY 76 MAINTENANCE MANUAL
SA 4047-76-2, CHAPTER 6

AIRCRAFT STRUCTURAL DIMENSIONS

CHAPTER

6

DIMENSIONS AND AREAS

CHAPTER 6

DIMENSIONS AND AREAS

TABLE OF CONTENTS

SUBJECT	CHAPTER/ SECTION	PAGE
DIMENSIONS AND AREAS	6-00-00	
Description		1
General		1
Stations, Waterlines, and Buttlines		2

CHAPTER 6

DEMENSIONS AND AREAS

LIST OF EFFECTIVE PAGES

CHAPTER/ SECTION	PAGE	DATE	REV. NO.	CHAPTER/ SECTION	PAGE	DATE	REV. NO.
6 - TITLE							
6 - LEP	1	Apr 15/83	17				
6 - CONTENTS	1	Oct 1/78	0				
6-00-00	1	Apr 15/83	17				
	2	Apr 15/83	17				
	3/4	Apr 15/83	17				
	5/6	Oct 1/78	0				
	7	July 20/79	4				

DIMENSIONS AND AREAS - DESCRIPTION

1. General.

Principal dimensions and areas of the helicopter are given in Table 1 and Figures 1 and 2.

TABLE I

DIMENSIONS AND AREAS

GENERAL	
Main rotor disc diameter	44 ft (13.41m)
Tail rotor disc diameter	8 ft (2.438m)
Width (overall)	
Maximum (with blades stationary)	44 ft (13.41m)
Minimum (with blades removed)	10.0 ft (3.048m)
Length (overall)	
Maximum (blades at extreme positions)	52 ft 8 in. (16.00m)
Height (overall)	
Maximum (tail rotor blade at high position)	14 ft 5.8 in. (4.414m)
MAIN ROTOR BLADES	
Number	4
Chord with tab	15.5 in. (0.394m)
Ground clearance (rotating)	8 ft 1 in. (2.464m)
Ground clearance (static)	6 ft 3.2 in. (1.910m)
TAIL ROTOR BLADES	
Number	4
Chord	0.54 ft (0.165m)
Ground clearance (rotating)	6 ft 5.8 in. (1.98m)

TABLE 1 (Cont)

FUSELAGE (WITHOUT MAIN ROTOR AND TAIL ROTOR BLADES)	
Maximum width	10.0 ft (3.048m)
Maximum length	43 ft 4.43 in. (13.219m)
Maximum height	11 ft 8.9 in. (3.58m)
Door dimensions (passenger)	
Width	3 ft 2.5 in. (0.978m)
Height	4 ft 4 in. (1.32m)
HORIZONTAL STABILIZER	
Area	18.45 sq. ft (1.714 sq. m)
Airfoil	4412 INVERTED
Incidence	+2°
VERTICAL STABILIZER	
Area	19.62 sq. ft (1.823 sq. m)
Airfoil	63_4 - 421
Camber	2.5° EFFECTIVE

2. Stations, Waterlines, and Buttlines (Figure 3).

A. Description. For reference purposes, helicopter length is divided into stations, the height is divided into waterlines, and the width is divided into buttlines. These references are stated in inches.

(1) Stations (Sta). Stations are vertical divisions of the helicopter from forward to aft running from station 0, a preconceived line at a given point forward of the helicopter. The helicopter fuselage is divided from station 19, the most forward part of the nose section, to station 539, the most aft part of the vertical stabilizer.

(2) Waterlines (W/L). Waterlines are horizontal divisions of the helicopter from bottom to top, running from W/L 0, a preconceived line below the helicopter. W/L 37 is the static ground line and W/L 157 is at the top of the main rotor head.

(3) Buttlines (B/L). Buttlines are vertical divisions of the helicopter from the left and to the right of the centerline (C/L). The centerline (B/L 0) is a line running through the exact center of the helicopter from forward to aft.

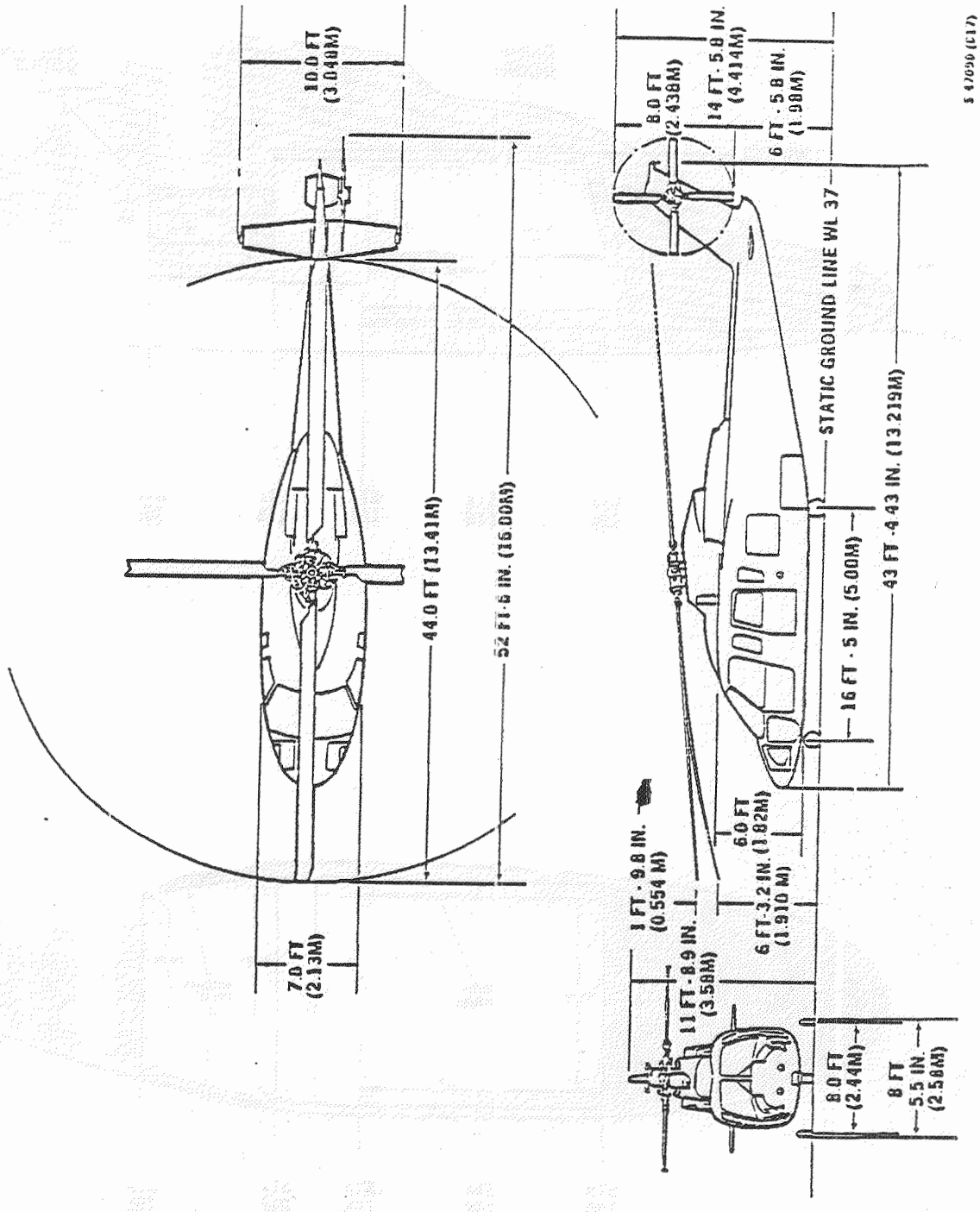

Three-View Dimensional Diagram
Figure 1

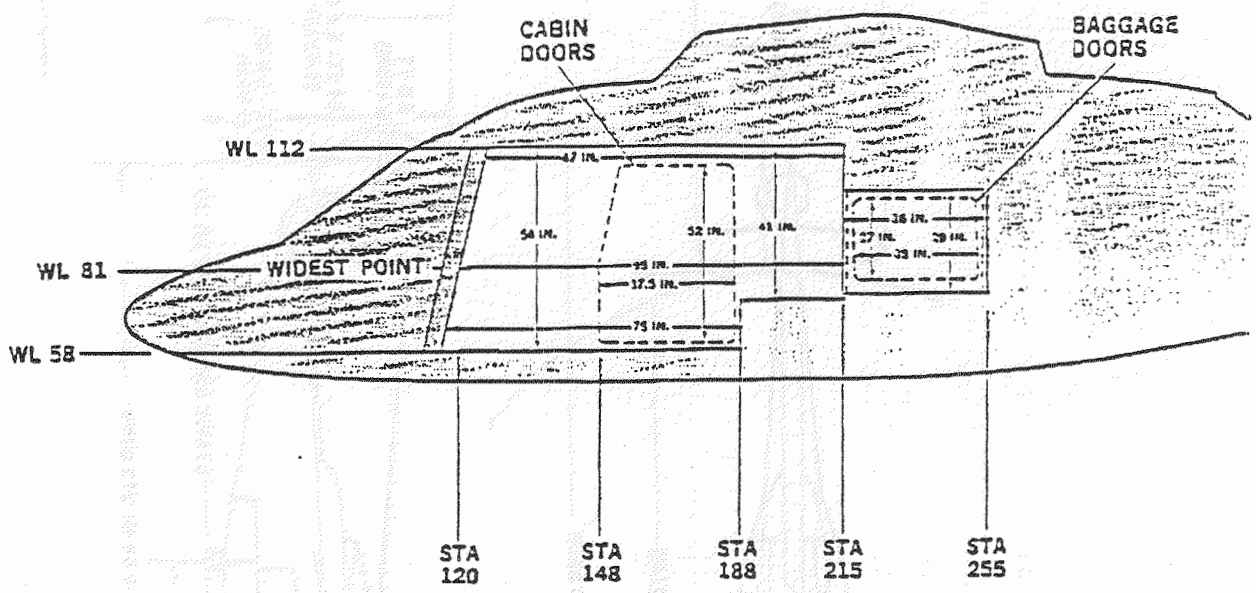

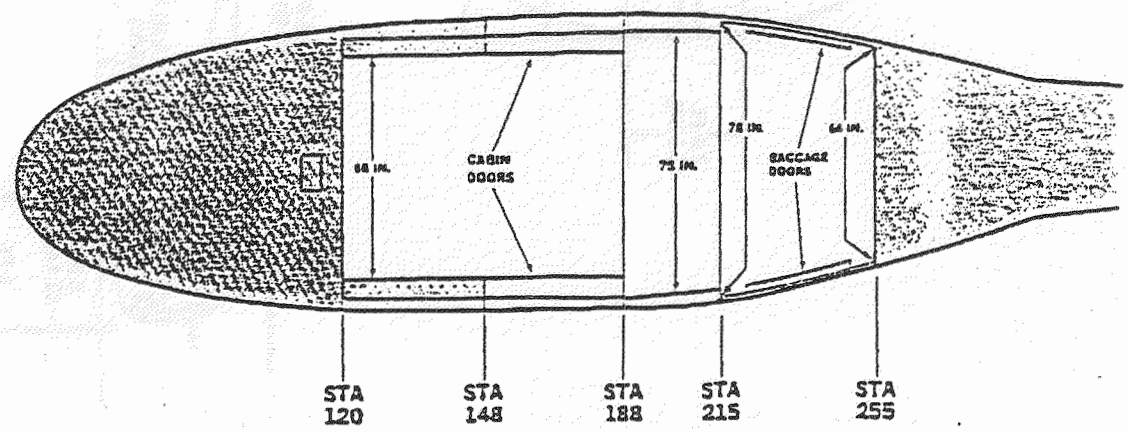

Compartment Dimensions
Figure 2 (Part 1 of 2)

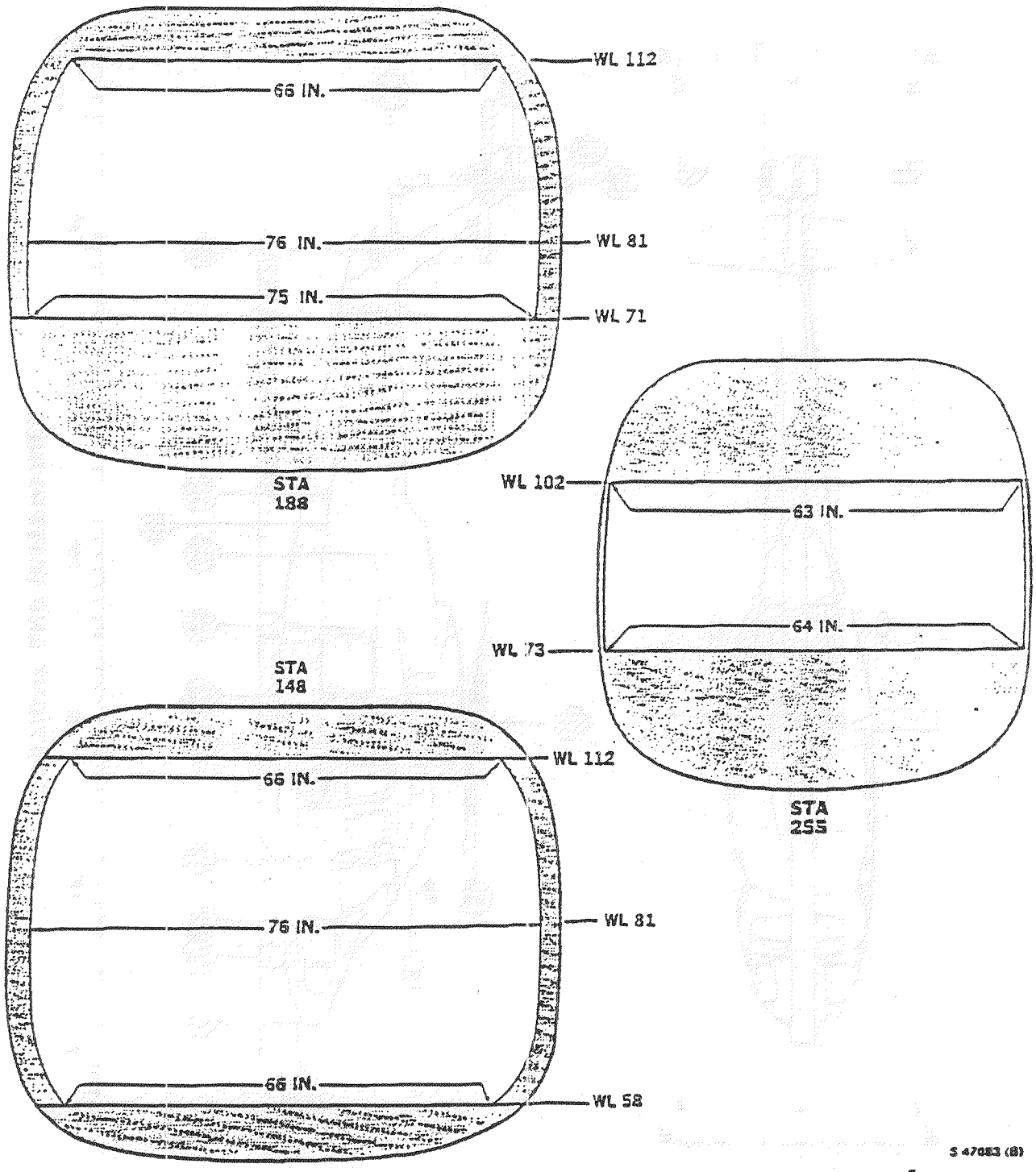

S 47083 (B)

6-00-00

Compartment Dimensions
Figure 2 (Part 2)

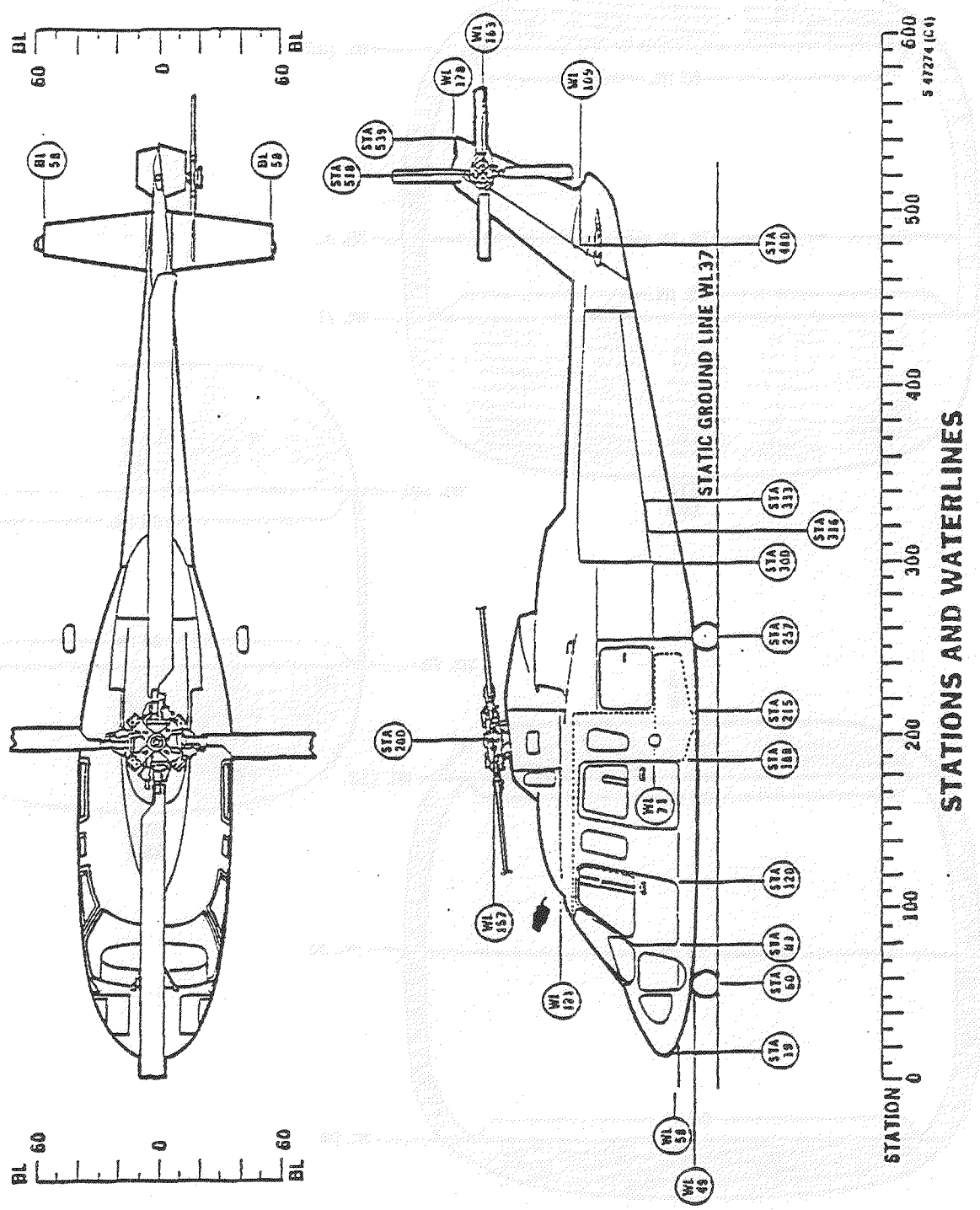

Stations, Waterlines and Buttlines Diagram
Figure 3

APPENDIX H

ANSI C95.1 1982 STANDARD

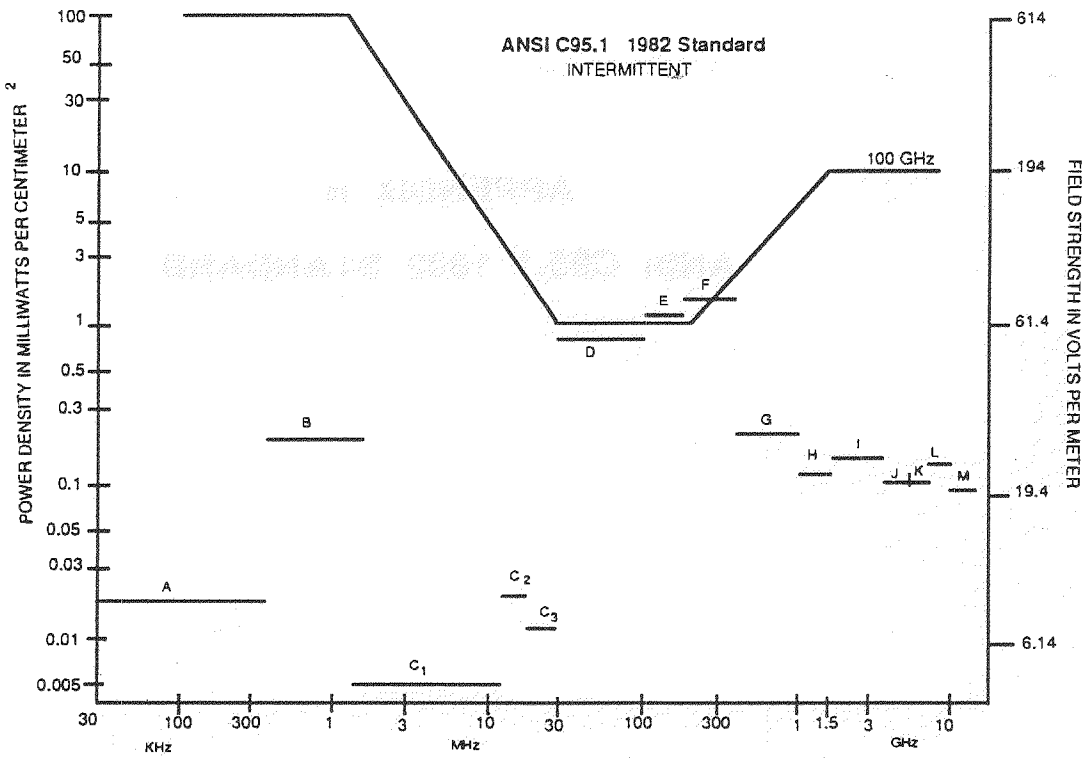

POWER DENSITY LEVELS ARE FOR ONE METER FROM ANTENNA

RADIATION HAZARD CHART