ct
TN
91
30

COPY 1

# Solid-State Radar Beacon Decoder (SSRBD) Operational Test and Evaluation (OT&E) Integration Test Plan

Thomas D. Bratton

October 1991

DOT/FAA/CT-TN91/30

Document is on file at the Technical Center Library, Atlantic City International Airport, N.J. 08405

FEDERAL AVIATION ADMINISTRATION

NOV 21 1991

TECHNICAL CENTER LIBRARY
ATLANTIC CITY INTL AIRPORT, NJ 08405

U.S. Department of Transportation
**Federal Aviation Administration**

Technical Center
Atlantic City International Airport, N.J. 08405

technical note technical note

FAA Technical Center
*00016510*

## NOTICE

This document is disseminated under the sponsorship of the U.S. Department of Transportation in the interest of information exchange. The United States Government assumes no liability for the contents or use thereof.

The United States Government does not endorse products or manufacturers. Trade or manufacturers' names appear herein solely because they are considered essential to the objective of this report.

Technical Report Documentation Page

| | | |
|---|---|---|
| 1. Report No. DOT/FAA/CT-TN91/30 | 2. Government Accession No. | 3. Recipient's Catalog No. |
| 4. Title and Subtitle SOLID-STATE RADAR BEACON DECODER (SSRBD) OPERATIONAL TEST AND EVALUATION (OT&E)/ INTEGRATION TEST PLAN | | 5. Report Date October 1991 |
| | | 6. Performing Organization Code ACN-220 |
| 7. Author(s) Thomas Bratton | | 8. Performing Organization Report No. DOT/FAA/CT-TN91/30 |
| 9. Performing Organization Name and Address Federal Aviation Administration Technical Center Atlantic City International Airport, NJ 08405 | | 10. Work Unit No. (TRAIS) |
| | | 11. Contract or Grant No. |
| 12. Sponsoring Agency Name and Address U.S. Department of Transportation Federal Aviation Administration Technical Center Atlantic City International Airport, NJ 08405 | | 13. Type of Report and Period Covered Technical Note |
| | | 14. Sponsoring Agency Code |
| 15. Supplementary Notes | | |

16. Abstract

This document defines the Solid-State Radar Beacon Decoder (SSRBD) operational and integration tests that will be conducted at the Federal Aviation Administration (FAA) operational facilities. These tests will be executed following the contractor site acceptance test. Each SSRBD test configuration will be addressed in conjunction with the associated interfaces which will be required to perform the testing in as near an operational environment as possible.

The National Airspace System (NAS) requirements and test objectives contained in this document can be traced to those designated in the SSRBD Master Test Plan (MTP). In addition to providing requirements traceability, this plan contains a description of the tests which will be executed, associated success criteria, roles and responsibilities of test personnel, and the overall flow of activities required for a successful test program.

| | | | |
|---|---|---|---|
| 17. Key Words SSRBD OT&E Integration | | 18. Distribution Statement Document is on file at the Technical Center Library, Atlantic City International Airport, NJ 08405 | |
| 19. Security Classif. (of this report) Unclassified | 20. Security Classif. (of this page) Unclassified | 21. No. of Pages 40 | 22. Price |

Form DOT F 1700.7 (8-72) Reproduction of completed page authorized

TABLE OF CONTENTS


| | Page |
|---|---|
| EXECUTIVE SUMMARY | v |
| 1. INTRODUCTION | 1 |
| 1.1 Purpose | 1 |
| 1.2 Scope | 1 |
| 2. REFERENCE DOCUMENTS | 2 |
| 3. T&E PHILOSOPHY, APPROACH, AND CONCEPT | 3 |
| 4. ORGANIZATIONAL ROLES AND RESPONSIBILITIES | 3 |
| 4.1 Test Management | 4 |
| 4.2 Test Support | 4 |
| 4.3 Test Manager | 5 |
| 5. DOCUMENTATION REQUIREMENTS AND CONTROL | 5 |
| 5.1 Documentation | 6 |
| 5.2 Reviews | 9 |
| 6. OT&E/INTEGRATION TESTING | 10 |
| 6.1 SSRBD ASR-9/SCIP OT&E/Integration Test | 11 |
| 6.2 SSRBD/RML OT&E/Integration Test | 18 |
| 6.3 SSRBD ATCBI-3/BRITE T&E/Integration Test | 22 |
| 6.4 SSRBD ATCBI-4/D-BRITE T&E/Integration Test | 25 |
| 7. SSRBD OPERATIONAL/INTEGRATION TEST TRAINING | 29 |
| 8. SSRBD OT&E/INTEGRATION T&E SCHEDULE | 29 |
| APPENDIX | |

## LIST OF ILLUSTRATIONS


| Figure | | Page |
|---|---|---|
| 2.1 | Reference Documents | 2 |
| 5.1-1 | SSRBD OT&E/Integration Test Document Flow | 7 |
| 6-1 | SSRBD/ASR-9/SCIP Test Configuration, Kansas City, MO | 12 |
| 6-2 | SSRBD/RML Test Configuration, Philadelphia, Willow Grove, PA | 13 |
| 6-3 | SSRBD/ATCBI-3/D-BRITE Test Configuration, St. Thomas, U.S. Virgin Islands | 14 |
| 6-4 | SSRBD/ATCBI-4/D-BRITE Test Configuration, Kahului Airport, Kahului, HI | 15 |
| 8-1 | OT&E/Integration T&E Schedule | 30 |


## LIST OF TABLES


| Table | | Page |
|---|---|---|
| 4.2-1 | SSRBD Operational Test and Evaluation/Integration Test Support Group Responsibilities | 5 |
| 5.1-1 | Test Logs/Documents/Report Matrix | 8 |

# EXECUTIVE SUMMARY

The overall philosophy and approach for the Operational Test and Evaluation (OT&E)/Integration of the Solid-State Radar Beacon Decoder (SSRBD) system is defined in this test plan. Integration testing focuses on verifying the requirements of the SSRBD specification, FAA-E-2825A, and that it meets the interfacing requirements of the specified subsystems in the National Airspace System (NAS). The operational requirements of the SSRBD will be tested when it is integrated with the required NAS subsystems to comprise each SSRBD configuration. Operational testing focuses on evaluating the SSRBD system from a user's perspective. This evaluation will be performed to detect improvements, as well as degradation that may be associated with the SSRBD prior to field deployment.

This document functionally describes the SSRBD operational and integration tests in a NAS environment as required in its specification FAA-E-2825A and the Master Test Plan (MTP). There are no NAS requirements for the SSRBD defined in either NAS-SS-1000 or NAS-DD-1000. It is written to determine the SSRBD operational effectiveness and operational suitability when the ATC and field personnel perform their tasks relative to the existing beacon decoders.

There is no SSRBD delivery to the Federal Aviation Administration (FAA) Technical Center for NAS test-bed use or OT&E/Integration test and evaluation (T&E). The FAA Logistics Center does not provide all interface requirements for SSRBD OT&E/Integration T&E. The first test configuration will be tested at the FAA facility at Kansas City International Airport. It was not feasible to test all of the SSRBD test configurations during the OT&E/Integration test phase. All required radar beacon systems will be tested with the SSRBD in accordance with the contractor delivery schedule. Follow-on OT&E/Integration testing for the remainder of the test configurations will be done in the early part of 1992.

## 1. INTRODUCTION.

In response for replacement of obsolete, tube-type radar beacon decoders, required to meet the needs of the National Airspace System (NAS), the Federal Aviation Administration (FAA) has developed plans to deploy Solid-State Radar Beacon Decoders (SSRBD). As part of the NAS system, the SSRBD will be compatible with the existing air traffic control Radar Beacon System (ATCRBS) subsystems. It will display raw beacon video or decoded beacon symbology to the air traffic control (ATC) independent of the Automated Radar Terminal System (ARTS).

Following the SSRBD factory acceptance testing, the contractor will deliver and install the first production system at the first FAA facility. The contractor will then proceed with the Site Acceptance Test (SAT) which constitutes FAA acceptance of the first production article. Once the SSRBD is accepted, ACN-220 shall conduct operational and integration testing at the FAA facility. ASM-630 will ensure that an accurate inventory of deliverables is recorded. Testing is designed to ensure that the SSRBD is in compliance with system requirements. It also ensures that the system is operationally suitable and properly integrated into the NAS from a user's perspective.

### 1.1 PURPOSE.

The purpose of this document is to define the overall planning, testing, activities, and coordination associated with the operational and integration testing that will be conducted at the first operational site. This testing will be performed in accordance with FAA Order 1810.4A, Test and Evaluation Program; and NAS-MD-110, Test and Evaluation (T&E) Terms and Definitions for the National Airspace System.

Integration testing will ensure that the SSRBD meets the requirements of the NAS system during the T&E defined in FAA-E-2825A. Operational testing will focus on determining to what degree the SSRBD meets, exceeds, or degrades the operational characteristics of the present tube type (radar beacon decoders). It will determine if any new capabilities made available through the SSRBD pose a detriment/impact to ATC operations from a user's perspective.

### 1.2 SCOPE.

This plan defines the following:

a. The operational and integration requirements to be verified at the first FAA facility and the configurations to be utilized for verification.

b. The scope/degree of testing during the NAS Operational Test and Evaluation (OT&E)/Integration T&E at the FAA facilities.

c. The resources and activities to be coordinated in preparation for, and support of NAS integration testing.

d. The resources and activities to be coordinated in preparation for, and support of NAS operational testing.

e. The development of detailed test procedures used to perform the SSRBD operational and integration testing.

## 2. REFERENCE DOCUMENTS.

The hierarchical dependencies of the primary documents used in the development of this plan are presented as shown in figure 2.1. This figure indicates that the guidance for the format and contents of this plan was derived primarily from the following documents: FAA Order 1810.4A, FAA-STD-024A, NAS-MD-110, FAA-E-2825A, and the SSRBD Master Test Plan.

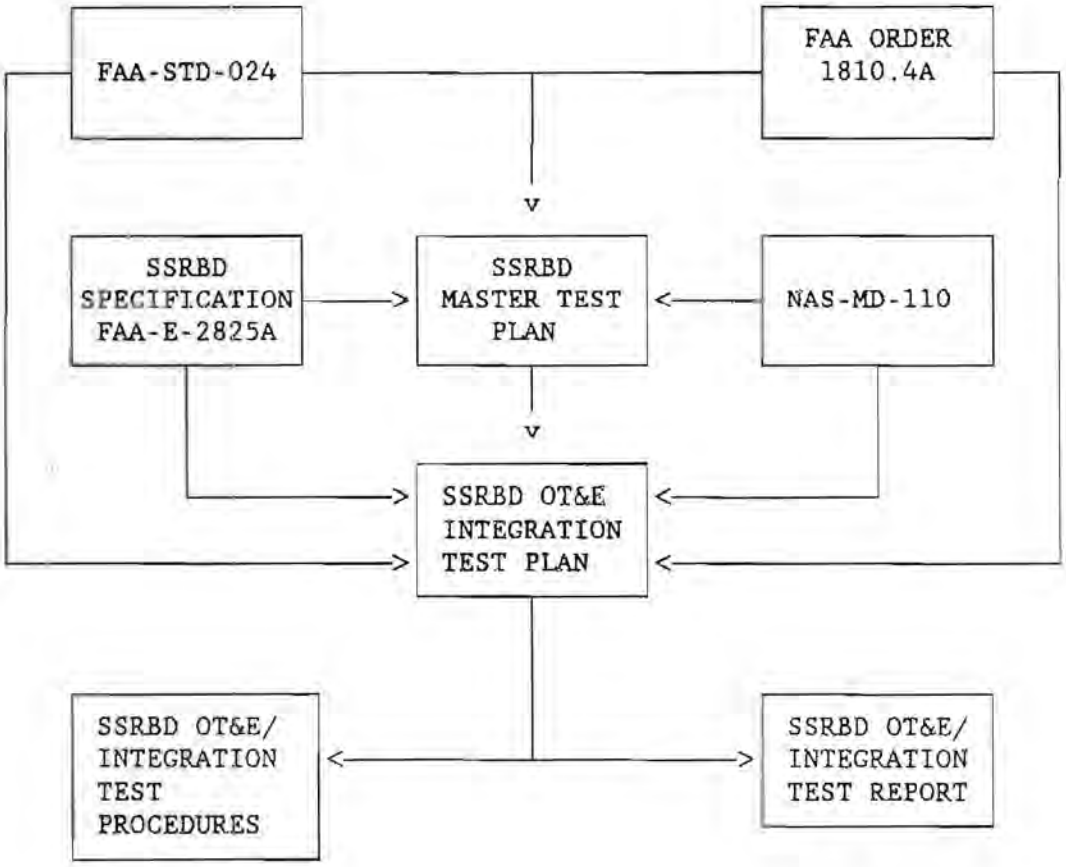


FIGURE 2-1. REFERENCE DOCUMENTS

A list of applicable documentation and reference materials which relate to the contents of this plan is provided below.

| | |
|---|---|
| DTFA01-89-C-00053 | Solid State Radar Beacon Decoder Contract |
| FAA-E-2825A | Solid State Radar Beacon Decoder Specification |
| FAA-STD-024A | Preparation of Test and Evaluation Documentation |
| FAA Order 1810.4A | FAA NAS Test and Evaluation Program |
| NAS-MD-110 | Test Terms and Definitions for the National Airspace System. |
| DOT/FAA/CT-TN91/33 | SSRBD Master Test Plan |

## 3. T&E PHILOSOPHY, APPROACH, AND CONCEPT.

This test plan will ensure that the SSRBD operational suitability and operational effectiveness is evaluated when implemented into the NAS system and verify that it performs as specified in FAA-E-2825A. It will provide for the verification of the applicable requirements identified in the Test Verification Requirements Traceability Matrix (TVRTM). This test plan will also ensure the development of the detailed OT&E/Integration test procedures.

The operational performance of the SSRBD will be tested and evaluated with simulated and live beacon inputs, from a beacon test set and targets of opportunity, when it is interfaced to each required test configuration. The ability to test the SSRBD operational requirements as a stand-alone system, with required NAS subsystems, verifies its full operability and that there are no operational deficiencies. It will demonstrate the field personnel and ATC personnel abilities to perform the respective maintenance and ATC functions, effectively, when the SSRBD is present in the NAS.

Test logs and data sheets will be recorded by the test personnel and questionnaires will be filled out by experienced air traffic personnel to determine the SSRBD's operational performances from a user's standpoint before the final test report is documented. The data collected from this T&E will determine if the system is ready to be operational and integrated in the NAS before the execution of the Joint Acceptance Inspection (JAI) and the Operational Readiness Demonstration (ORD).

## 4. ORGANIZATIONAL ROLES AND RESPONSIBILITIES.

This section describes the roles and responsibilities of the FAA and other organizations that will be participating in the SSRBD operational/integration test activities. The participating personnel consist of the test management and test support groups.

## 4.1 TEST MANAGEMENT.

The SSRBD T&E management organization will be responsible to assure all requirement verification is accounted for during the SSRBD OT&E/Integration testing. The management organization will be comprised of representatives from ACN-220 and ANR-110.

### 4.1.1 Management Responsibility.

The SSRBD test management has the responsibility to direct, control, and monitor all test efforts relative to the SSRBD OT&E/Integration activities. The management has the following detailed responsibilities:

a. Establish policies related to the SSRBD OT&E/Integration T&E activities.

b. Review and provide concurrence/nonconcurrence with all test plans and procedures related to the SSRBD T&E.

c. Distribute SSRBD T&E activity related documents to all participating organizations for review.

d. Assign roles and responsibilities to the SSRBD OT&E/Integration test support group.

e. Direct and control FAA OT&E/Integration tests.

## 4.2 TEST SUPPORT.

The SSRBD test support group will consist of personnel who are knowledgeable in the specific technical areas. The role of this group is to support the SSRBD test management group in developing test requirements, plans, procedures, and other test support tools. The group will also assist in test conduct, test analysis, and test report generation. The group will be comprised of personnel from the organization shown in table 4.2-1. Responsibilities of the members will also be noted.

TABLE 4.2-1. SSRBD OPERATIONAL TEST AND EVALUATION/INTEGRATION TEST SUPPORT GROUP RESPONSIBILITIES

| Government/FAA | Primary Roles/Functions |
|---|---|
| ANR-110 | Serves as program manager and provides ultimate authority and direction over test operations. |
| ACN-1 | Provide overall coordination and direction of the SSRBD Operational/Integration testing. |
| ACN-200 | Serves as test director. |
| ACN-220 | Prepare test plans and procedures; conduct testing; prepare accurate test results following test completion; coordinate and schedule all SSRBD test activities; determine noncritical/critical test requirements; provide test coordination services and direction for the implementation of this plan; and issue final test reports. |
| ASE-500, AAF | Provide NAS system-level requirements for T&E (VRTM); verifies compliance with Order 1810.4A, standards and NAS system level and OT&E requirements for T&E in support of the Test Plan Review Board (TPRB). |
| ASM-630 | Provide assistance and support to the implementation of this plan by reviewing test plans, test data, and test reports. |
| AAT, AAF | Conducts and/or monitor site-acceptance and field shakedown; responsible for ORD and commissioning; and support ACN during OT&E testing. |

## 4.3 TEST MANAGER.

There will be one test manager assigned to each test. The test manager's duties include (1) scheduling the required facilities, (2) assigning duties to the test team members, (3) holding the pretest and post-test reviews, and (4) supervising the actual test conduct and collection of test data. The test manager will also be responsible for analysis and associated documentation for each test.

# 5. DOCUMENTATION REQUIREMENTS AND CONTROL.

This section identifies the test documentation, reviews, and reports that will be necessary to support the SSRBD Operational/Integration testing to be conducted at the FAA facility.

## 5.1 DOCUMENTATION.

A description of each required document which will be utilized for planning, conducting, and reporting the SSRBD operational/integration test activities as presented below. Figure 5.1-1 illustrates the sequence in which these products are prepared while table 5.1-1 defines each product and when it should be completed.

### 5.1.1 SSRBD Operational Test and Evaluation/Integration Test Plan.

This plan establishes the test configurations, test methods, test requirements, objectives, and general test descriptions.

### 5.1.2 SSRBD Operational Test and Evaluation/Integration Test Procedures.

The test procedures will contain step-by-step instructions for testing the requirements associated to each configuration. In addition, the procedures will also include the following:

a. The location and schedule date for the activities that will take place before and after the conduct of the test (e.g., the pretest and post-test briefing and the actual test execution),

b. The documentation references that are applicable to the contents of the procedure,

c. The test objectives,

d. The criteria of success for each objective,

e. The personnel that will be required to execute the test,

f. Test support hardware,

g. The test operations instructions which will include a detailed test setup and test conduct,

h. The instructions for termination and the restart of a test,

i. TVRTM.

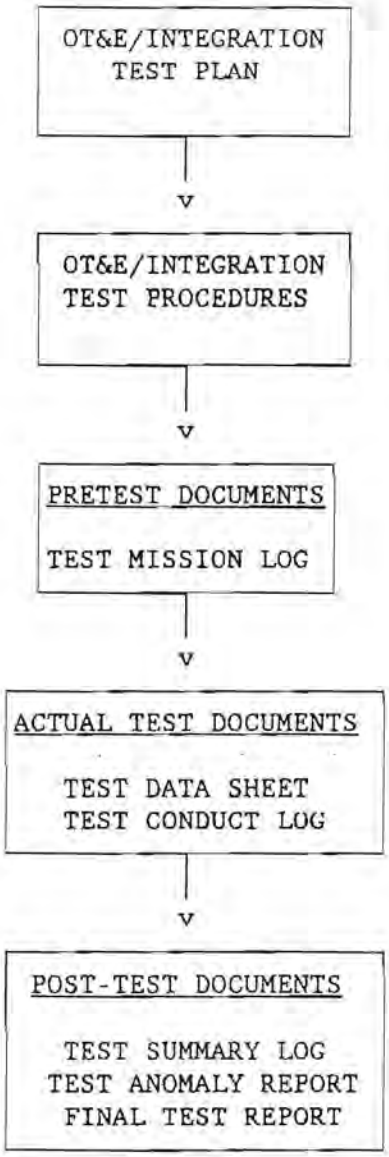


FIGURE 5.1-1. SSRBD OT&E/INTEGRATION TEST DOCUMENT FLOW

TABLE 5.1-1. TEST LOGS/DOCUMENTS/REPORTS MATRIX

| Forms/Documents/Reports | Required Completion |
|---|---|
| OT&E/Integration Test Plan | Prior to testing |
| OT&E/Integration Test Procedures | Prior to testing |
| Test Mission Log | Pretest review |
| Test Conduct Log | During test |
| Test Data Sheet | During test |
| Test Anomaly Report | Post-test review |
| Test Summary Log | Post-test review |
| Final Test Report | 30 working days after test completion |

5.1.3 Test Mission Log.

The Test Mission Log shall be completed by the test manager during the pretest review. This log will contain any open items (discrepancies from the test procedure), the test objectives, the hardware configuration, and a list of test team members and their assignments.

5.1.4 Test Conduct Log.

The Test Conduct Log will be used by the test team members to record specific events during the test, as noted by the test procedure.

5.1.5 ATC Evaluation Form.

The ATC Evaluation Form will be used by the air traffic controllers to record relevant events and observations during the test and to evaluate the operational suitability of the SSRBD system in the NAS environment. Since these forms will be test specific they will be prepared as part of the test procedures.

5.1.6 Test Summary Log.

The Test Summary Log shall be completed by the test manager during the post-test review. This log will be used to record any deviations from the test procedures that had not been noted in the test mission log. The log will also contain a summary of the test conduct and a preliminary assessment of the test.

5.1.7 Test Anomaly Reports.

The Test Anomaly Reports shall be completed by the test manager during the post-test review. Test anomaly reports shall be written to describe any hardware or system anomalies encountered during the test. These reports shall list in detail as much information about the anomaly as obtained. Anomaly reports will be assigned for further investigation and may result in having a written trouble report on the various hardware or system.

5.1.8 Final Test Report.

The Final Test Report will be produced for each tested configuration. A draft report will be delivered to the SSRBD Program Manager within 30 working days after the test completion. The report will present a summary conclusion for the operational suitability of the tested configuration. The final report will contain the following:

a. The title, purpose, and dates of the test.

b. A description of the tested configuration, the test conduct (including any discrepancies from the test procedure and their significance), and the test equipment used.

c. The specific test objectives (including TVRTM requirements), the success criteria used for evaluation for each test objective, and the test results for that objective.

d. A discussion of each hardware or system test anomalies generated and its impact.

e. Requirements Verification Compliance

f. Conclusions

5.2 REVIEWS.

The following subsections describe the pretest and post-test reviews that will be held for each SSRBD NAS Operational/Integration test. These reviews will be chaired by the test manager, as well as other members of the test team, that have been assigned for the specific test.

5.2.1 Pretest Review.

This review will be scheduled prior to the start of the test. The purpose of this review will be to accomplish the following:

a. Identify any needed changes and red line the procedures accordingly.

b. Review the hardware configurations of the test environment.

c. Ensure that all items in the material checklist, contained in the test procedure, have been received.

d. Generate a record of the pretest briefing minutes.

5.2.2 Post-test Review.

This review will be held upon test completion. The test manager will prepare a post-test review package. This package will contain the following:

a. The as-run hardware configuration.

b. Any procedure step or configuration deviations, test discrepancies, anomalies, and their significance to the test results.

c. A summary of the overall test outcome. This summary will be derived by reviewing the following:

1. The preliminary test assessment
2. All Test Conduct Logs
3. Any preliminary data analysis
4. All test anomaly reports generated

## 6. OT&E/INTEGRATION TESTING.

The OT&E will be conducted to determine the SSRBD system's operational suitability and operational effectiveness as part of the NAS. The operational testing focuses on evaluating the SSRBD system from a user's perspective. This evaluation will be performed to detect improvements, as well as degradation that may be associated with the SSRBD against the existing Air Traffic Control Beacon Interrogator (ATCBI)-3 decoders.

The SSRBD system is required to interface with and operate with the following NAS subsystems per specification FAA-E-2825A and the Master Test Plan:

a. ATCBI-3,4,5

b. Airport Surveillance Radar (ASR-9)/Surveillance and Communication Interface Processor (SCIP)

c. Radar Microwave Link (RML)-1,2,3,4,6

d. Bright Radar Indicator Tower Equipment (BRITE) or Digital Bright Radar Indicator Tower Equipment (D-BRITE) Display

The SSRBD NAS integration test configurations are depicted in figures 6-1 through 6-4. These figures are comprised of terminal test configurations. The actual interface equipment used for verification are shown in these figures. Operational testing will be performed in parallel with integration testing using the configurations shown in figures 6-1 through 6-4. These tests will be conducted at four FAA ATC facilities. To execute the integration testing more effectively, field experienced air traffic controllers will participate in those tests. The information documented in the summary sheets and questionnaires will be compiled and an overall assessment of the SSRBD system will be performed to determine its operational impact.

For each test configuration presented in this section, the following information will be specified: (1) test objective, (2) criteria of success, (3) resource requirements, (4) resource documents, (5) test description, and (6) data analysis. This information will be utilized in conjunction with additional details to produce the SSRBD OT&E/Integration Test Procedures.

## 6.1 SSRBD ASR-9/SCIP OT&E/INTEGRATION TEST.

Figure 6-1 depicts the SSRBD controlled by the ASR-9/SCIP interface. This test configuration will be tested at the Kansas City International Airport, FAA facility location. As shown, the SSRBD will receive replies from the output of the ASR-9/SCIP. A beacon test set or live ATCRBS transponder will provide the reply data in this test. The replies will contain identification data associated with the code settings on the beacon test set or transponder. The decoder control panel of the SSRBD will have been set to the proper code settings corresponding to the beacon test set or transponder reply data. From this data, the SSRBD will process and send decoded beacon pulses to the ARTS display, which in turn will display the corresponding beacon symbology.

This test will verify the requirements relating to the reply exchange from the ASR-9/SCIP interface to the SSRBD. It will verify that the SSRBD functional interface is capable of detecting and decoding beacon reply data from the ASR-9/SCIP when it is deployed into the NAS system. The SSRBD ASR-9/SCIP interface output results will be used in determining the operational suitability and operational effectiveness when used by ATC personnel.

### 6.1.1 Test Objectives.

The following objectives are based on the SSRBD to receive beacon video and trigger modes from an ASR-9/SCIP. The test objectives for the SSRBD ASR-9/SCIP T&E are the following:

a. Verify that the SSRBD decodes all mode 3/A replies.

b. Verify that the SSRBD mode C fill-in eliminates the holes in the video display.

c. Verify that the SSRBD automatically decodes emergency replies.

d. Verify that the SSRBD detects and properly decodes live target crossings.

e. Verify that the output symbols are in accordance with the specification FAA-E-2825A.

f. Verify the operational impact of changes in decoded beacon symbology and selectable beacon code entries.

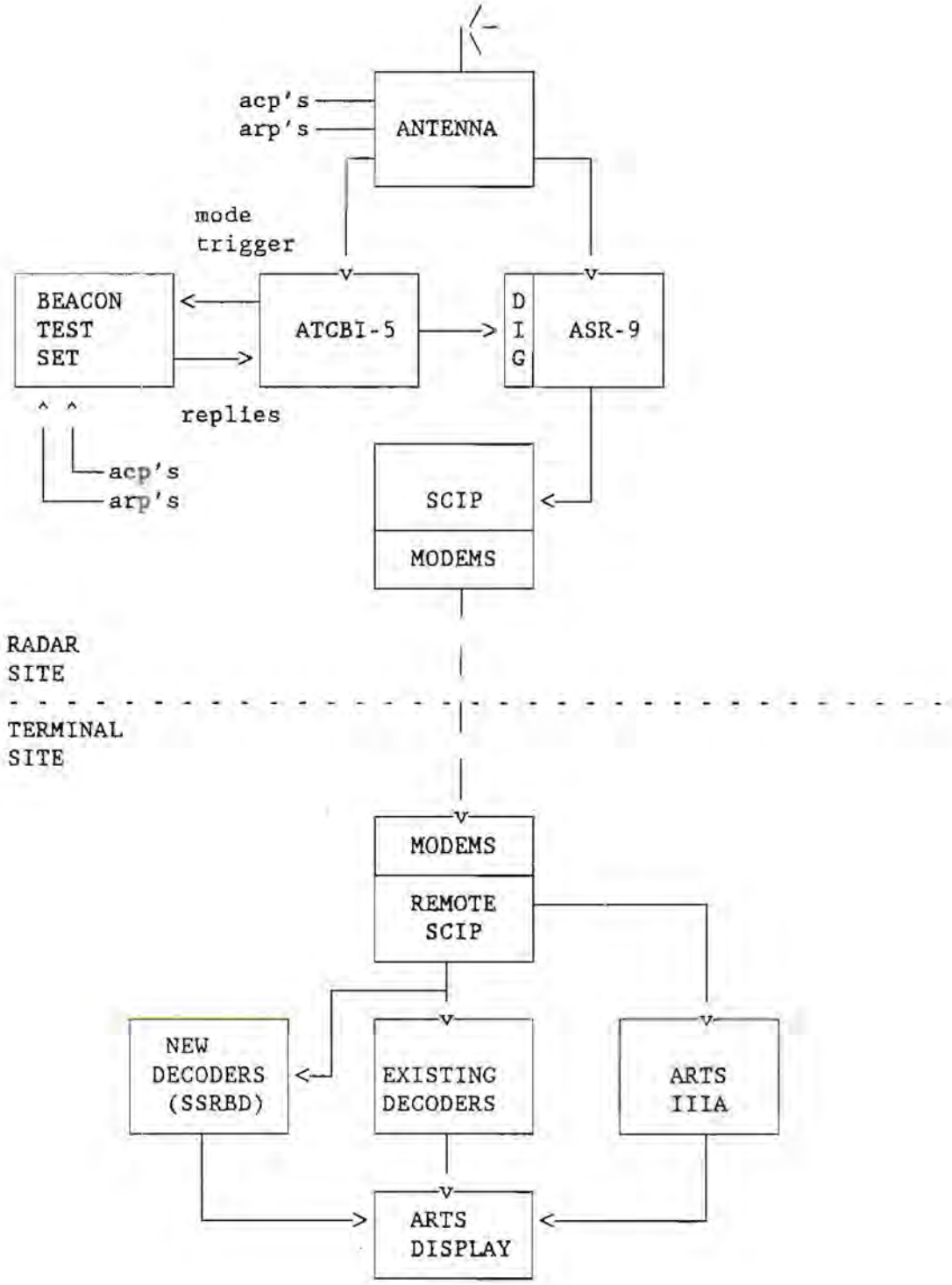


LEGEND:
acp - azimuth change pulse
arp - azimuth reference pulse

FIGURE 6-1. SSRBD/ASR-9/SCIP TEST CONFIGURATION
KANSAS CITY, MO

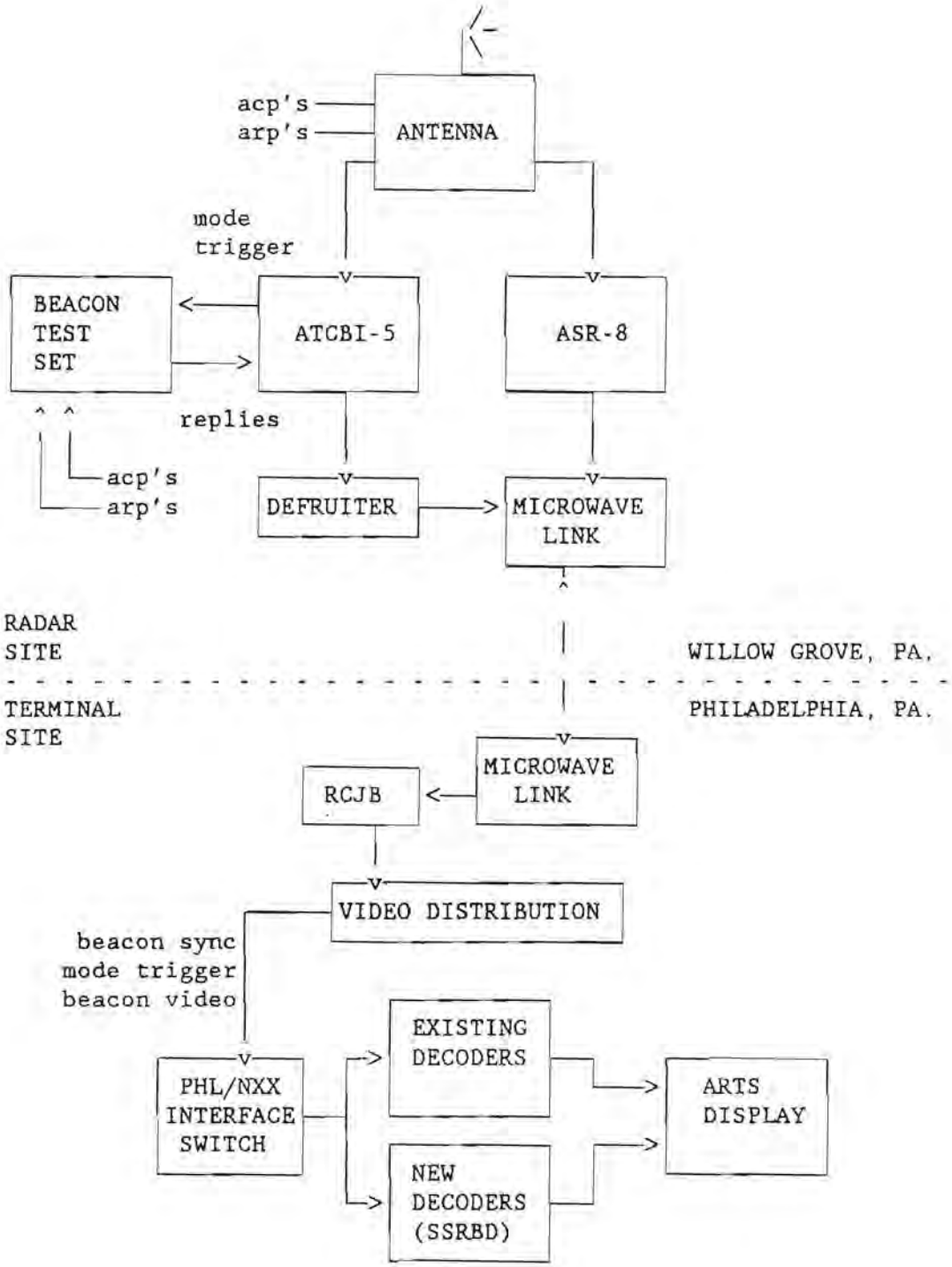


LEGEND:
acp - azimuth change pulse
arp - azimuth reference pulse

FIGURE 6-2. SSRBD/RML TEST CONFIGURATION
PHILADELPHIA/WILLOW GROVE, PA

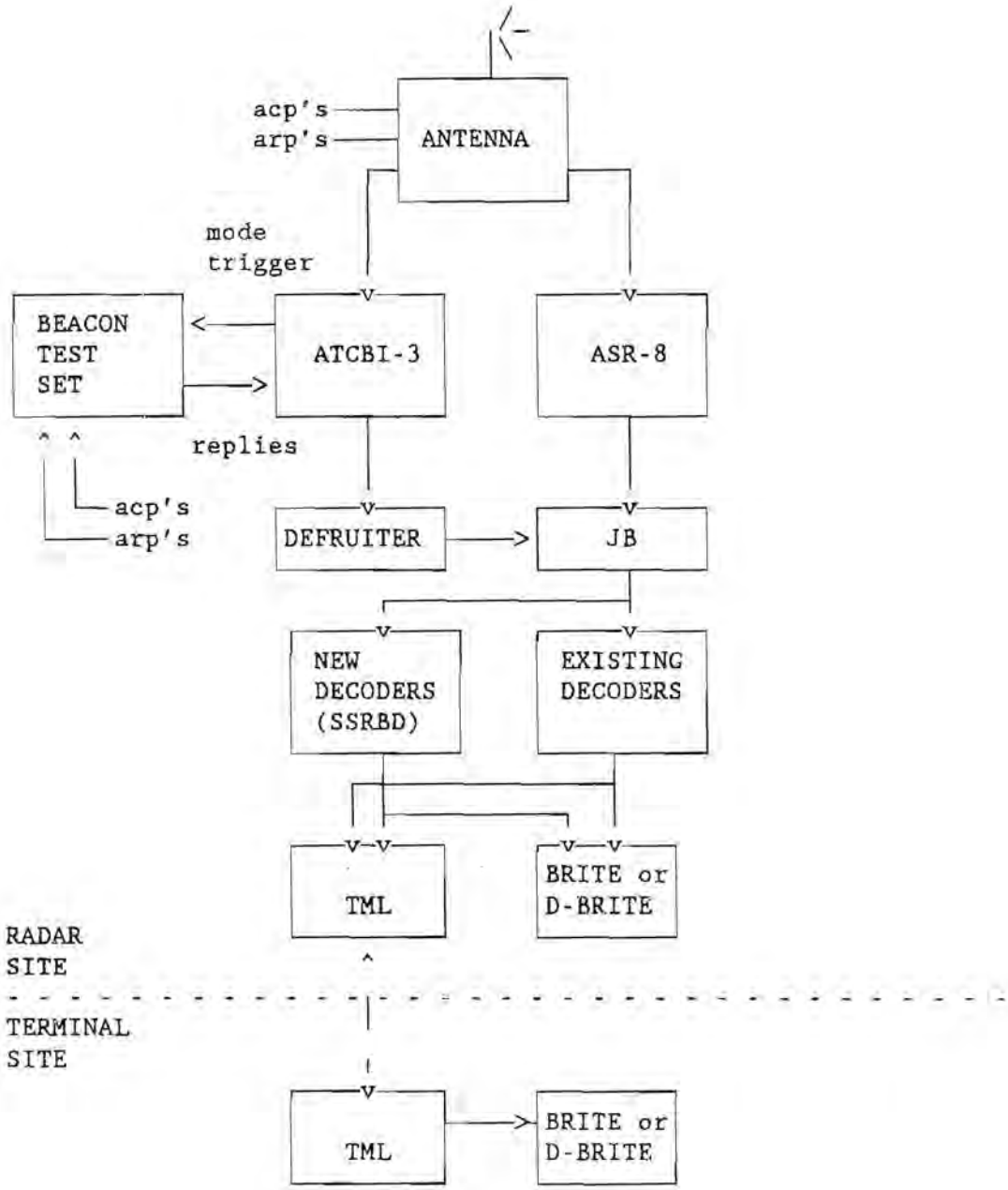


LEGEND:
acp - azimuth change pulse
arp - azimuth reference pulse

FIGURE 6-3. SSRBD/ATCBI-3/D-BRITE TEST CONFIGURATION
ST. THOMAS, U. S. VIRGIN ISLANDS

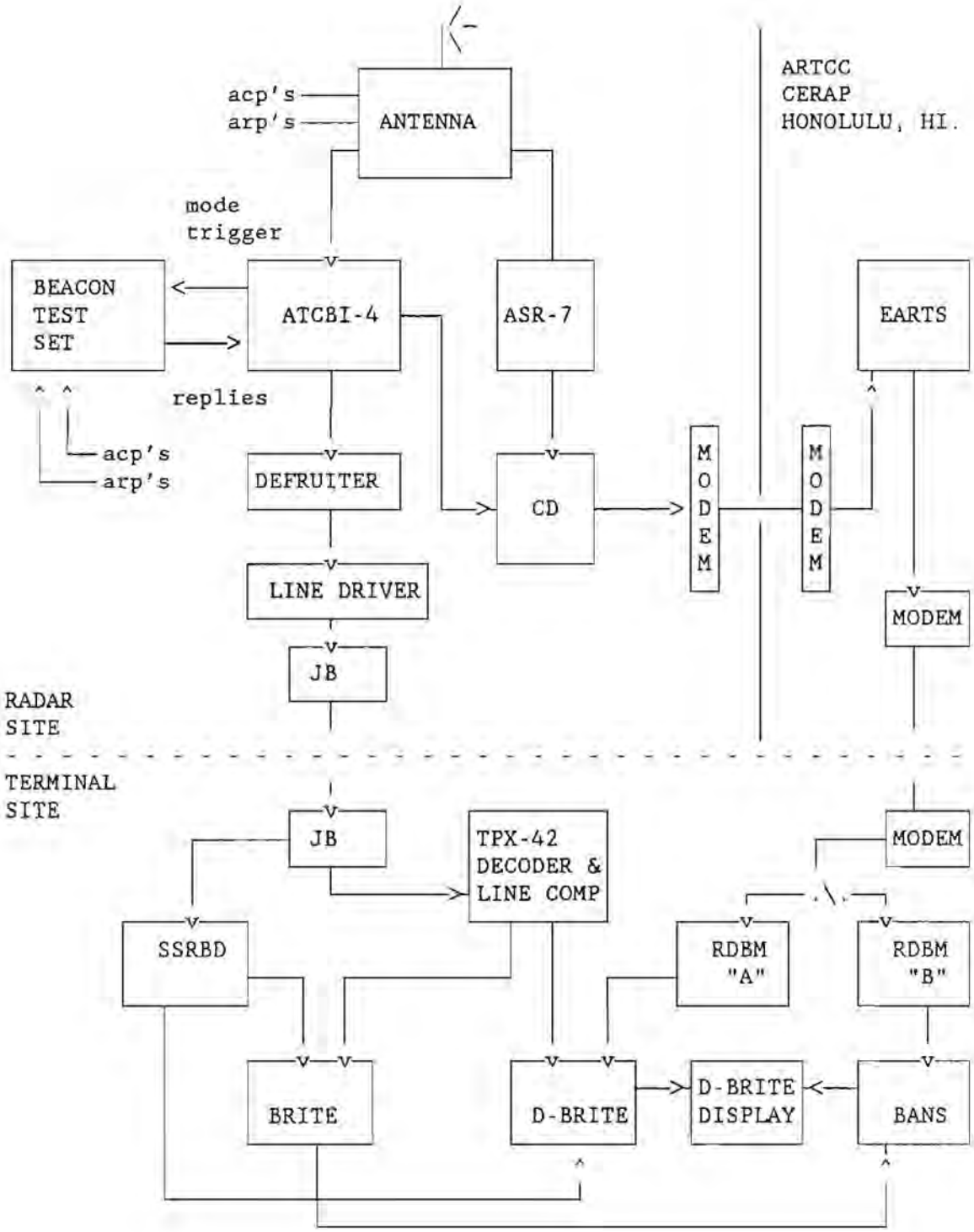


LEGEND:
acp - azimuth change pulse
arp - azimuth reference pulse

FIGURE 6-4. SSRBD/ATCBI-4/D-BRITE TEST CONFIGURATION
KAHULUI AIRPORT, KAHULUI HI

6.1.2 Criteria of Success.

This criteria of success defined below shall be applied individually against each objective stated in section 6.1.1 and the following TVRTM requirements in appendix A have been met:

a. The SSRBD shall detect and decode all mode 3/A replies by displaying appropriate symbols (requirement Nos. 02, 04, and 08 of the TVRTM).

b. The SSRBD shall automatically detect and decode emergency replies by displaying appropriate special symbols (requirement Nos. 04 and 09 of the TVRTM).

c. The SSRBD shall be capable of mode C fill-in of the mode 3/A and C interlace (requirement Nos. 02, 04, 06, and 08 of the TVRTM).

d. The SSRBD shall properly detect and decode live target crossings (requirement Nos. 02 and 04 of the TVRTM).

e. The SSRBD shall not degrade any existing beacon symbols (requirement Nos. 04, 06, 08, 11, 13, and 14 of the TVRTM).

f. The SSRBD shall not degrade any existing decoder control functions (requirement Nos. 02, 03, 04, 07, 08, 11, 13, and 14 of the TVRTM).

g. The SSRBD line compensator shall properly detect and decode beacon sync, mode triggers, and beacon video when a SCIP is utilized (requirement Nos. 01, 02, 12, and 13 of the TVRTM).

h. The SSRBD shall not degrade the existing decoder emergency signal indicators (requirement Nos. 10, 13, and 14).

6.1.3 Resource Requirements.

The following subsections define additional support hardware, software, and equipment required in this test.

6.1.3.1 Facilities and Support Hardware.

a. ASR-9/SCIP
b. ATCBI-5
c. Aircraft equipped with ATCRBS transponders

6.1.3.2 Support Software.

a. Not applicable to this section

6.1.3.3 Special Test Equipment.

a. Beacon Video Test Set - Type FA-9410
b. RF Test Set - Type FA-9411

6.1.4 Resource Documents.

a. Order 1010.51A - ATCRBS Characteristics
b. FAA-E-2704B - Airport Surveillance Radar (ASR-9) Specification

6.1.5 Test Description.

This test will demonstrate SSRBD operability by receiving mode triggers and replies from the output of the ASR-9/SCIP interface and functionally displaying its output on an ARTS display.

In the first part of this test, the ASR-9/SCIP system will obtain its reply video initiated by the beacon test set. Mode 3/A and C replies will be generated by the beacon test set and provided to the input of the ATCBI-5 system. Emphasis during testing will be on Mode 3/A replies. The reply codes will consist of the F1 and F2 framing pulses with 12-bit information pulses and an Special Pulse Identifier (SPI) pulse. Emergency replies are generated with code values of 7700 for emergency, 7600 for radio communication failure, and 7500 for hijack. The reply codes will be changed to obtain the various symbols. All decoder control functions will be tested. The output of the ASR-9/SCIP will be decoded by the SSRBD. The decoder output symbols will be observed on the ARTS display. The output of the old decoder and the SSRBD will be compared on the ARTS display. The test engineer will log the data collected and the air traffic controller will observe and record the results on the questionnaire provided.

In the second part of this test, the ASR-9/SCIP system will obtain its reply video using targets of opportunity. Testing will be initiated by having the controller instruct the desired aircraft to respond with a particular aircraft ID. The output of the old beacon decoder and the SSRBD will be compared on the ARTS display for improvements or degradation of beacon video symbols. The old and new decoder outputs will be overlaid on the ARTS display and the individual intensity displayed can be adjusted to see either output.

The SSRBD operational tests will be discussed in the following sections.

6.1.5.1 Mode 3/A Reply and Emergency Reply Decoding.

6.1.5.1.1 Reply Code Decoding.

The beacon test set will be set to transmit mode 3/A replies. Various reply codes will be set to test all bits of code decoding. The beacon test set will transmit mode 3/A and C replies according to the beacon interrogator preassigned mode 3/A and C interlace pattern. The SSRBD should fill in the holes of the mode 3/A and C interlace reply symbols when a mode C reply is detected. The output of the SSRBD will be observed on the ARTS display for each reply code and recorded.

6.1.5.1.2 Emergency Reply Decoding.

The beacon test set will be set to transmit a mode 3/A reply with a reply code of 7700, 7600, and 7500. The output of the SSRBD will be observed on the ARTS display and recorded when each emergency code is set. This will determine if the SSRBD automatically decodes emergency replies.

6.1.5.1.3 Overlap/Interleave Replies.

The air traffic controller will observe crossings of two or more aircraft. The decoder control panel of the SSRBD will have been preset to the proper identification (ID). The output will be observed on the ARTS display when the crossing occurs. This will determine whether the SSRBD is capable of detecting overlapped and interleaved replies and decoding interleaved replies from a SCIP interface.

6.1.5.2 Transponder Reply.

The ATC personnel will instruct the aircraft to respond with standard mode 3/A codes and emergency codes. The mode triggers, reply video, and beacon sync will be obtained from the output of the ASR-9/SCIP system and processed by the SSRBD. The output of the SSRBD will be observed on the ARTS display and recorded for each reply.

6.1.6 Data Analysis.

The data collected from video displays will be recorded in test logs for the individual tests conducted. A participating air traffic controller will observe the data on the video displays and record the results on the questionnaire provided. During the post-test review, the data obtained from the test logs will be entered into a data sheet with the expected results. The data analysis shall be performed by comparing actual results with the expected results. Any discrepancies will be noted and documented in the test anomaly report. The post-test review will also verify that all of the requirements of the objectives and the TVRTM have been met. The ATC questionnaire form will be used in determining the SSRBD operational effectiveness and operational suitability when it is integrated into the NAS. It will determine whether the SSRBD offers the same, improved, or degraded performances relative to the present ATCBI beacon decoders. The test logs, data sheets, and ATC questionnaire will be included with the test procedures. The final test results will be documented as described in section 5.1.8 in the test report.

6.2 SSRBD/RML OT&E/INTEGRATION TEST.

Figure 6-2 depicts the SSRBD controlled by the RML interface. This test configuration will be tested at the Philadelphia International Airport, FAA facility location. The beacon information will be provided from a remote radar site at Willow Grove, PA. As shown, the SSRBD will receive replies from the output of the RML. A beacon test set or live ATCRBS transponder will provide the reply data in this test. The replies will contain ID data associated with the code settings on the beacon test set or transponder. The decoder control panel of the SSRBD will have been set to the proper code settings corresponding to the beacon test set or transponder reply data. From this data, the SSRBD will process and send decoded beacon pulses to the ARTS display, which in turn will display the corresponding beacon symbology.

This test will verify the requirements relating to the reply exchange from the RML interface to the SSRBD. It will verify that the SSRBD functional interface is capable of detecting and decoding beacon reply data from the RML when it is deployed into the NAS system. The SSRBD/RML interface output results will be used in determining the operational suitability and operational effectiveness when used by ATC personnel.

6.2.1 Test Objectives.

The following objectives are based on the SSRBD to receive beacon video and trigger modes from a RML. The test objectives for the SSRBD/RML T&E are the following:

a. Verify that the SSRBD decodes all mode 3/A replies.

b. Verify that the SSRBD mode C fill-in eliminates the holes in the video display.

c. Verify that the SSRBD automatically decodes emergency replies.

d. Verify that the SSRBD detects and properly decodes live target crossings.

e. Verify that the output symbols are in accordance with the specification FAA-E-2825A.

f. Verify the operational impact of changes in decoded beacon symbology and selectable beacon code entries.

6.2.2 Criteria of Success.

This criteria of success defined below shall be applied individually against each objective stated in section 6.2.1 and the following TVRTM requirements in appendix A have been met:

a. The SSRBD shall detect and decode all mode 3/A replies by displaying appropriate symbols (requirement Nos. 02, 04, and 08 of the TVRTM).

b. The SSRBD shall automatically detect and decode emergency replies by displaying appropriate special symbols (requirement Nos. 04 and 09 of the TVRTM).

c. The SSRBD shall be capable of mode C fill-in of the mode 3/A and C interlace (requirement Nos. 02, 04, 06, and 08 of the TVRTM).

d. The SSRBD shall properly detect and decode live target crossings (requirement Nos. 02 and 04 of the TVRTM).

e. The SSRBD shall not degrade any existing beacon symbols (requirement Nos. 04, 06, 08, 11, 13, and 14 of the TVRTM).

f. The SSRBD shall not degrade any existing decoder control functions (requirement Nos. 02, 03, 04, 07, 08, 11, 13, and 14 of the TVRTM).

g. The SSRBD line compensator shall properly detect and decode beacon sync, mode triggers, and beacon video when an RML is utilized (requirement Nos. 01, 02, 12, and 13 of the TVRTM).

h. The SSRBD shall not degrade the existing decoder emergency signal indicators (requirement Nos. 10, 13, and 14).

6.2.3 Resource Requirements.

The following subsections define additional support hardware, software, and equipment required in this test.

6.2.3.1 Facilities and Support Hardware.

a. RML
b. ATCBI-5
c. ASR-8
d. Aircraft equipped with ATCRBS transponders

6.2.3.2 Support Software.

a. Not applicable to this section

6.2.3.3 Special Test Equipment.

a. Beacon Video Test Set - Type FA-9410
b. RF Test Set - Type FA-9411

6.2.4 Resource Documents.

a. Order 1010.51A - ATCRBS Characteristics

6.2.5 Test Description.

This test will demonstrate SSRBD operability by receiving mode triggers and replies from the output of the RML interface and functionally displaying its output on an ARTS display.

In the first part of this test, the RML system will obtain its reply video from an ATCBI-5 and ASR-8 system which will be initiated by the beacon test set. The mode 3/A and C replies will be generated by the beacon test set and provided to the input of the ATCBI-5 system. Emphasis during testing will be on mode 3/A replies. The reply codes will consist of the F1 and F2 framing pulses with 12-bit information pulses and an SPI pulse. Emergency replies are generated with code values of 7700 for emergency, 7600 for radio communication failure, and 7500 for hijack. The reply codes will be changed to obtain the various symbols. All decoder control functions will be tested. The decoder output symbols will be observed on the ARTS display. The output of the old decoder and the SSRBD will be compared on the ARTS display. The test engineer will log the data collected and the air traffic controller will observe and record the results on the questionnaire provided.

In the second part of this test, the RML system will obtain its reply video from an ATCBI-5/ASR-8 system which will be initiated by targets of opportunity. Testing will be initiated having the ATC personnel to instruct the desired aircraft to respond with a particular aircraft ID. The output of the old decoder and the SSRBD will be compared on the ARTS display for improvements or degradation of beacon video symbols. The old and new decoder outputs will be overlayed on the ARTS display and the individual intensity displayed can be adjusted to see either output.

The individual SSRBD operational test will be discussed in the following sections.

6.2.5.1 Mode 3/A Reply and Emergency Reply Decoding.

6.2.5.1.1 Reply Code Decoding.

The beacon test set will be set to transmit mode 3/A replies. Various reply codes will be set to test all bits of code decoding. The beacon test set will transmit mode 3/A and C replies according to the beacon interrogator preassigned mode 3/A and C interlace pattern. The SSRBD should fill in the holes of the mode 3/A and C interlace reply symbols when a mode C reply is detected. The output of the SSRBD will be observed on the ARTS display for each reply code and recorded.

6.2.5.1.2 Emergency Reply Decoding.

The beacon test set will be set to transmit a mode 3/A reply with a reply code of 7700, 7600, and 7500. The output of the SSRBD will be observed on the ARTS display and recorded when each emergency code is set. This will determine if the SSRBD automatically decodes emergency replies.

6.2.5.1.3 Overlap/Interleave Replies.

The air traffic controller will observe crossings of two or more aircraft. The decoder control panel of the SSRBD will have been preset to the proper ID. The output will be observed on the ARTS display when the crossing occurs. This will determine whether the SSRBD is capable of detecting overlapped and interleaved replies and decoding interleaved replies over an RML.

6.2.5.2 Transponder Reply.

The ATC personnel will instruct the aircraft to respond with standard mode 3/A codes and emergency codes. The mode triggers, reply video, and beacon sync will be obtained from the output of the RML system and processed by the SSRBD. The output of the SSRBD will be observed on a BRITE and recorded for each reply.

6.2.6 Data Analysis.

The data collected from video displays will be recorded in test logs for the individual tests conducted. A participating air traffic controller will observe the data on the video displays and record the results on the questionnaire provided. During the post-test review, the data obtained from the test logs will be entered into a data sheet with the expected results. The data analysis shall be performed by comparing actual results with the expected results. Any discrepancies will be noted and documented in the test anomaly report. The post-test review will also verify that all of the requirements of the objectives and the TVRTM have been met. The ATC questionnaire form will be used in determining the SSRBD operational effectiveness and operational suitability when it is integrated into the NAS. It will determine whether the SSRBD offers the same, improved, or degraded performances relative to the present ATCBI beacon decoders. The test logs, data sheets, and ATC questionnaire will be included with the test procedures.
The final test results will be documented as described in section 5.1.8 in the test report.

## 6.3 SSRBD ATCBI-3/BRITE T&E/INTEGRATION TEST.

Figure 6-3 depicts the SSRBD controlled by the ATCBI-3 interface. This test configuration will be tested at the St. Thomas King Airport, FAA facility location. As shown, the SSRBD will receive replies from the output of the ATCBI-3. An ATCBI-3 system is considered a worst case test configuration since it is of tube-type system. A beacon test set or live ATCRBS transponder will provide the reply data in this test. The replies will contain identification data associated with the code settings on the beacon test set or transponder. The decoder control panel of the SSRBD will have been set to the proper code settings corresponding to the beacon test set or transponder reply data. From this data, the SSRBD will process and send decoded beacon pulses to the BRITE display, which in turn will display the corresponding beacon symbology.

This test will verify the requirements relating to the reply exchange from the ATCBI-3 interface to the SSRBD. It will verify that the SSRBD functional interface is capable of detecting and decoding beacon reply data from the ATCBI-3 when it is deployed into the NAS system. The SSRBD ATCBI-3 interface output results will be used in determining the operational suitability and operational effectiveness when used by ATC personnel.

### 6.3.1 Test Objectives.

The following objectives are based on the SSRBD to receive beacon video and trigger modes from an ATCBI-3. The test objectives for the SSRBD ATCBI-3 T&E are the following:

a. Verify that the SSRBD decodes all mode 3/A replies.

b. Verify that the SSRBD mode C fill-in eliminates the holes in the video display.

c. Verify that the SSRBD automatically decodes emergency replies.

d. Verify that the SSRBD detects and properly decodes live target crossings.

e. Verify that the output symbols are in accordance with the specification FAA-E-2825A.

f. Verify the operational impact of changes in decoded beacon symbology and selectable beacon code entries.

### 6.3.2 Criteria of Success.

This criteria of success defined below shall be applied individually against each objective stated in section 6.3.1 and the following TVRTM requirements in appendix A have been met:

a. The SSRBD shall detect and decode all mode 3/A replies by displaying appropriate symbols (requirement Nos. 02, 04, and 08 of the TVRTM).

b. The SSRBD shall automatically detect and decode emergency replies by displaying appropriate special symbols (requirement Nos. 04, and 09 of the TVRTM).

c. The SSRBD shall be capable of mode C fill-in of the mode 3/A and C interlace (requirement Nos. 02, 04, 06, and 08 of the TVRTM).

d. The SSRBD shall properly detect and decode live target crossings (requirement Nos. 02 and 04 of the TVRTM).

e. The SSRBD shall not degrade any existing beacon symbols (requirement Nos. 04, 06, 08, 11, 13, and 14 of the TVRTM).

f. The SSRBD shall not degrade any existing decoder control functions (requirement Nos. 02, 03, 04, 07, 08, 11, 13, and 14 of the TVRTM).

g. The SSRBD line compensator shall properly detect and decode beacon sync, mode triggers, and beacon video when an ATCBI-3 is utilized (requirement Nos. 01, 02, 12, and 13 of the TVRTM).

h. The SSRBD shall not degrade the existing decoder emergency signal indicators (requirement Nos. 10, 13, and 14).

6.3.3 Resource Requirements.

The following subsections define additional support hardware, software, and equipment required in this test.

6.3.3.1 Facilities and Support Hardware.

a. ATCBI-3
b. ASR-8
c. BRITE
d. Aircraft equipped with ATCRBS transponders

6.3.3.2 Support Software.

a. Not applicable to this section

6.3.3.3 Special Test Equipment.

a. Beacon Video Test Set - Type FA-9410
b. RF Test Set - Type FA-9411

6.3.4 Resource Documents.

a. Order 1010.51A - ATCRBS Characteristics

6.3.5 Test Description.

This test will demonstrate SSRBD operability by receiving mode triggers and replies from the output of the ATCBI-3 interface and functionally displaying its output on a BRITE or D-BRITE.

In the first part of this test, the ATCBI-3 system will obtain its reply video initiated by the beacon test set. Mode 3/A and C replies will be generated by the beacon test set and provided to the input of the ATCBI-3 system. Emphasis during testing will be on Mode 3/A replies. The reply codes will consist of the F1 and F2 framing pulses with 12-bit information pulses and an SPI pulse. Emergency replies are generated with code values of 7700 for emergency, 7600 for radio communication failure, and 7500 for hijack. The reply codes will be changed to obtain the various symbols. All decoder control functions will be tested. The decoder output symbols will be observed on the BRITE display. The output of the old decoder and the SSRBD will be compared on the BRITE display. The test engineer will log the data collected and the air traffic controller will observe and record the results on the questionnaire provided.

In the second part of this test, the ATCBI-3 system will obtain its reply video using targets of opportunity. Testing will be initiated having the ATC personnel to instruct the desired aircraft to respond with a particular aircraft ID. The output of the old beacon decoder and the SSRBD will be observed on the BRITE to compare the old and new beacon decoders for improvements or degradation of beacon video symbols. The old and new decoder outputs will be overlayed on the BRITE and the individual intensity displayed can be adjusted to see either output.

The individual SSRBD operational test will be discussed in the following sections.

6.3.5.1 Mode 3/A Reply and Emergency Reply Decoding.

6.3.5.1.1 Reply Code Decoding.

The beacon test set will be set to transmit mode 3/A replies. Various reply codes will be set to test all bits of code decoding. The beacon test set will transmit mode 3/A and C replies according to the beacon interrogator preassigned mode 3/A and C interlace pattern. The SSRBD should fill in the holes of the mode 3/A and C interlace reply symbols, when a mode C reply is detected. The output of the SSRBD will be observed on the BRITE display for each reply code and recorded.

6.3.5.1.2 Emergency Reply Decoding.

The beacon test set will be set to transmit a mode 3/A reply with a reply code of 7700, 7600, and 7500. The output of the SSRBD will be observed on a BRITE and recorded when each emergency code is set. This will determine if the SSRBD automatically decodes emergency replies.

6.3.5.1.3 Overlap/Interleave Replies.

The air traffic controller will observe crossings of two or more aircraft. The decoder control panel of the SSRBD will have been preset to the proper ID. The output will be observed on the BRITE display when the crossing occurs. This will determine whether the SSRBD is capable of detecting overlapped and interleaved replies and decoding interleaved replies over from a ATCBI-3.

6.3.5.2 Transponder Reply.

The ATC personnel will instruct the aircraft to respond with a standard mode 3/A codes and emergency codes. The mode triggers, reply video, and beacon sync will be obtained from the output of the ATCBI-3 system and processed by the SSRBD. The output of the SSRBD will be observed on a BRITE and recorded for each reply.

6.3.6 Data Analysis.

The data collected from video displays will be recorded in test logs for the individual tests conducted. A participating air traffic controller will observe the data on the video displays and record the results on the questionnaire provided. During the post-test review, the data obtained from the test logs will be entered into a data sheet with the expected results. The data analysis shall be performed by comparing actual results with the expected results. Any discrepancies will be noted and documented in the test anomaly report. The post-test review will also verify that all of the requirements of the objectives and the TVRTM have been met. The ATC questionnaire form will be used in determining the SSRBD operational effectiveness and operational suitability when it is integrated into the NAS. It will determine whether the SSRBD offers the same, improved, or degraded performances relative to the present ATCBI beacon decoders. The test logs, data sheets, and ATC questionnaire will be included with the test procedures.
The final test results will be documented as described in section 5.1.8 in the test report.

6.4 SSRBD ATCBI-4/D-BRITE T&E/INTEGRATION TEST.

Figure 6-4 depicts the SSRBD controlled by the ATCBI-4 interface. This test configuration will be tested at the Kahului Airport, FAA facility location. As shown, the SSRBD will receive replies from the output of the ATCBI-4. An ATCBI-4 system is considered a worst case test configuration since it is of tube-type system. A beacon test set or live ATCRBS transponder will provide the reply data in this test. The replies will contain identification data associated with the code settings on the beacon test set or transponder. The decoder control panel of the SSRBD will have been set to the proper code settings corresponding to the beacon test set or transponder reply data. From this data, the SSRBD will process and send decoded beacon pulses to the D-BRITE display, which in turn will display the corresponding beacon symbology.

This test will verify the requirements relating to the reply exchange from the ATCBI-4 interface to the SSRBD. It will verify that the SSRBD functional interface is capable of detecting and decoding beacon reply data from the ATCBI-4 when it is deployed into the NAS system. The SSRBD ATCBI-4 interface output results will be used in determining the operational suitability and operational effectiveness when used by ATC personnel.

6.4.1 Test Objectives.

The following objectives are based on the SSRBD to receive beacon video and trigger modes from an ATCBI-4. The test objectives for the SSRBD ATCBI-4 T&E are the following:

a. Verify that the SSRBD decodes all mode 3/A replies.

b. Verify that the SSRBD mode C fill-in eliminates the holes in the video display.

c. Verify that the SSRBD automatically decodes emergency replies.

d. Verify that the SSRBD detects and properly decodes live target crossings.

e. Verify that the output symbols are in accordance with the specification FAA-E-2825A.

f. Verify the operational impact of changes in decoded beacon symbology and selectable beacon code entries.

g. Verify that the SSRBD compensates for the beacon signals arriving over the land lines.

6.4.2 Criteria of Success.

This criteria of success defined below shall be applied individually against each objective stated in section 6.4.1 and the following TVRTM requirements in appendix A have been met:

a. The SSRBD shall detect and decode all mode 3/A replies by displaying appropriate symbols (requirement Nos. 02, 04, and 08 of the TVRTM).

b. The SSRBD shall automatically detect and decode emergency replies by displaying appropriate special symbols (requirement Nos. 04 and 09 of the TVRTM).

c. The SSRBD shall be capable of mode C fill-in of the mode 3/A and C interface (requirement Nos. 02, 04, 06, and 08 of the TVRTM).

d. The SSRBD shall properly detect and decode live target crossings (requirement Nos. 02 and 04 of the TVRTM).

e. The SSRBD shall not degrade any existing beacon symbols (requirement Nos. 04, 06, 08, 11, 13, and 14 of the TVRTM).

f. The SSRBD shall not degrade any existing decoder control functions (requirement Nos. 02, 03, 04, 07, 08, 11, 13, and 14 of the TVRTM).

g. The SSRBD line compensator shall properly detect and decode beacon sync, mode triggers, and beacon video when an ATCBI-4 is utilized (requirement Nos. 01, 02, 12, and 13 of the TVRTM).

h. The SSRBD shall not degrade the existing decoder emergency signal indicators (requirement Nos. 10, 13, and 14).

6.4.3 Resource Requirements.

The following subsections define additional support hardware, software, and equipment required in this test.

6.4.3.1 Facilities and Support Hardware.

a. ATCBI-4
b. ASR-7
c. BRITE or D-BRITE
d. Aircraft equipped with ATCRBS transponders

6.4.3.2 Support Software.

a. Not applicable to this section

6.4.3.3 Special Test Equipment.

a. Beacon Vide Test Set - Type FA-9410
b. RF Test Set - Type FA-9411

6.4.4 Resource Documents.

a. Order 1010.51A - ATCRBS Characteristics

6.4.5 Test Description.

This test will demonstrate SSRBD operability by receiving mode triggers and replies from the output of the ATCBI-4 interface and functionally displaying its output on a BRITE or D-BRITE.

In the first part of this test, the ATCBI-4 system will obtain its reply video initiated by the beacon test set. Mode 3/A and C replies will be generated by the beacon test set and provided to the input of the ATCBI-4 system. Emphasis during testing will be on Mode 3/A replies. The reply codes will consist of the F1 and F2 framing pulses with 12-bit information pulses and an SPI pulse. Emergency replies are generated with code values of 7700 for emergency, 7600 for radio communication failure, and 7500 for hijack. The reply codes will be changed to obtain the various symbols. All decoder control functions will be tested. The decoder output symbols will be observed on the BRITE display. The output of the old decoder and the SSRBD will be compared on the BRITE display. The test engineer will log the data collected and the air traffic controller will observe and record the results on the questionnaire provided.

In the second part of this test, the ATCBI-4 system will obtain its reply video using targets of opportunity. Testing will be initiated having the ATC personnel to instruct the desired aircraft to respond with a particular aircraft ID. The output of the old beacon decoder and the SSRBD will be observed on the BRITE to compare the old and new beacon decoders for improvements or degradation of beacon video symbols. The old and new decoder outputs will be displayed on the BRITE and can be adjusted to see either output.

The SSRBD operational tests will be discussed in the following sections.

6.3.5.1 Mode 3/A Reply and Emergency Reply Decoding.

6.3.5.1.1 Reply Code Decoding.

The beacon test set will be set to transmit mode 3/A replies. Various reply codes will be set to test all bits of code decoding. The beacon test set will transmit mode 3/A and C replies according to the beacon interrogator preassigned mode 3/A and C interlace pattern. The SSRBD should fill-in the holes of the mode 3/A and C interlace reply symbols when a mode C reply is detected. The output of the SSRBD will be observed on the BRITE display for each reply code and recorded.

6.3.5.1.2 Emergency Reply Decoding.

The beacon test set will be set to transmit mode 3/A reply with a reply code of 7700, 7600, and 7500. The output of the SSRBD will be observed on a BRITE and recorded when each emergency code is set. This will determine if the SSRBD automatically decodes emergency replies.

6.4.5.1.3 Overlap/Interleave Replies.

The air traffic controller will observe crossing of two or more aircraft. The decoder control panel of the SSRBD will have been preset to the proper ID's. The output will be observed on the BRITE display when the crossing occurs. This will determine whether the SSRBD is capable of detecting overlapped and interleaved replies and decoding interleaved replies over from a ATCBI-4.

6.4.5.2 Transponder Reply.

The ATC personnel will instruct the aircraft to respond with a standard mode 3/A codes and emergency codes. The mode triggers, reply video, and beacon sync will be obtained from the output of the ATCBI-4 system and processed by the SSRBD. The output of the SSRBD will be observed on a BRITE or D-BRITE and recorded for each reply.

6.4.6 Data Analysis.

The data collected from video displays will be recorded in test logs for the individual tests conducted. A participating air traffic controller will observe the data on the video displays and record the results on the questionnaire provided. During the post test review, the data obtained from the test logs will be entered into a data sheet with the expected results. The data analysis shall be performed by comparing actual results with the expected results. Any discrepancies will be noted and documented in the test anomaly report. The post-test review will also verify that all of the requirements of the objectives and the TVRTM have been met. The ATC questionnaire form will be used in determining the SSRBD operational effectiveness and operational suitability when it is integrated into the NAS. It will determine whether the SSRBD offers the same, improved, or degraded performances relative to the present ATCBI beacon decoders. The test logs, data sheets, and ATC questionnaire will be included with the test procedures. The final test results will be documented as described in section 5.1.8 in the test report.

## 7. SSRBD OPERATIONAL/INTEGRATION TEST TRAINING.

Training for the SSRBD Operational/Integration test support group members shall be provided by the SSRBD contractor, as stated in the SSRBD contract. The air traffic controllers that take part in operational evaluations will be given both pretest and post-test briefings. The training required by the controllers is minimal since the decoding capabilities of the SSRBD and the reply code selection by the controllers are similar to the current tube-type decoders.

The SSRBD training and overview shall be presented to the test support group. This training and briefing material will be developed from documentation provided by the contractor and will be used in the operational evaluation.

## 8. SSRBD OT&E/INTEGRATION T&E SCHEDULE.

The SSRBD NAS OT&E/Integration testing schedule flow from the SSRBD Master Test Plan schedule and contract requirements. The operational/integration testing timeframes are keyed off of the project delivery and acceptance dates. The FAA Technical Center OT&E/Integration testing will begin following the successful completion of the contractor installation and checkout, site acceptance testing, and Contract Acceptance Inspection (CAI). The schedule is depicted in figure 8-1. The schedule is shown with the month of year and months after contract for sequence tracking of the T&E activities. The SSRBD test configurations are shown in this schedule. The breakdown of the SSRBD test configuration locations and test duration are listed below in figure 8-1.

| | 1991 | | | | | | | | | 1992 | | | | |
|---|---|---|---|---|---|---|---|---|---|---|---|---|---|---|
| Month of year | 04 | 05 | 06 | 07 | 08 | 09 | 10 | 11 | 12 | 01 | 02 | 03 | 04 | 05 |
| Months after contract | 19 | 20 | 21 | 22 | 23 | 24 | 25 | 26 | 27 | 28 | 29 | 30 | 31 | 32 |
| Scheduled Activities | a | b | c | | | | | | d | e | f | g | h | i |

a. Contract Acceptance Inspection (CAI)

b. SSRBD/ASR-9/SCIP OT&E/Integration - 1 week
Kansas City International Airport,
FAA Facility

c. SSRBD/ASR-9/SCIP OT&E/Integration Report - 1 month

d. SSRBD/RML-6/BRITE OT&E/Integration - 1 week
Philadelphia International Airport,
FAA Facility

e. SSRBD/RML-6/BRITE OT&E/Integration Report - 1 month

f. SSRBD/ATCBI-3/BRITE OT&E/Integration - 1 week
St. Thomas King Airport, FAA Facility

g. SSRBD/ATCBI-3/BRITE OT&E/Integration Report - 1 month

h. SSRBD/ATCBI-4/D-BRITE OT&E/Integration - 1 week
Kahului Airport, Kahului, HA, FAA Facility

i. SSRBD/ATCBI-4/D-BRITE OT&E/Integration Report - 1 month

FIGURE 8-1. OT&E/INTEGRATION T&E SCHEDULE

# APPENDIX A

## SOLID-STATE RADAR BEACON DECODER (SSRBD)
## TEST VERIFICATION REQUIREMENTS TRACEABILITY MATRIX (TVRTM)

TVRTM Title: SSRBD OT&E/INTEGRATION TEST PLAN
TVRTM Legend:

Operational and System Test Level
Operational Test & Evaluation (OT&E)/
Shakedown (SD) - (OT&E/SD)
NAS Integration T&E (INT) - (OT&E/INT)

Locations
FAA Technical Center - TC
Key Site - KS
Factory - FA
FAA Facility - FAC

Criticality
Critical - C
Noncritical - NC

Test Plan Cross Reference
OT&E/Shakedown - OT&E/SD
OT&E/Integration - OT&E/INT

Verification Methods
Analysis - A
Demonstration - D
Inspection - I
Test - T
Not Applicable - NA

| OT&E Req. no. | Requirements doc. title, para. no. & statement | Test Levels: Operation OT&E/SD | Test Levels: System OT&E/INT | Test Location & Verif Method: TC | KS | FA | FAC | Critical C/NC | Test Plan Cross Ref. | Support Organi-zation | MTP Reference |
|---|---|---|---|---|---|---|---|---|---|---|---|
| | FAA-E-2825A Requirements | | | | | | | | | | |
| 01 | 3.2.1.1 Line Compensator - The SSRBD line compensator shall compensate for loss and phase shift versus frequency for triggers and video remoted over coaxial lines and micro-wave links. | X | X | | | | T | C | OT&E/SD | ACN-220 ASM-630 | 6.2.1.1 |
| 02 | 3.2.1.2 Common Decoder Circuitry - Ensure the common decoder can properly detect and decode selectable replies of modes 3/A and C. | | X | | | | T | C | | ACN-220 | 6.2.1.1 6.2.1.2 |

| OT&E Req. no. | Requirements doc. title, para. no. & statement | Test Levels: Operation OT&E/SD | Test Levels: System OT&E/INT | Test Location & Verif Method: TC | KS | FA | FAC | Critical C/NC | Test Plan Cross Ref. | Support Organi-zation | MTP Reference |
|---|---|---|---|---|---|---|---|---|---|---|---|
| 03 | 3.2.1.2.4 Control and Transfer - The selected codes on the SSRBD decoder control panel shall be maintained when a power failure or power switch-over occurs. | X | X | | | | T | C | OT&E/SD | ACN-220 ASM-630 | 6.2.1.3 |
| 04 | 3.2.1.3 Noncommon Decoder Circuitry - The SSRBD shall display the proper symbols for each selected codes. | | X | | | | T | C | | ACN-220 | 6.2.1.1 6.2.1.2 |
| 05 | 3.2.1.3.1 Output Level Control - The SSRBD shall drive six PPI displays. | | X | | | | I | NC | | ACN-220 | 6.2.1.2 |
| 06 | 3.2.1.4.1.3 Inhibit - The SSRBD shall provide mode C fill-in of the mode 3/A and C interlace to generate a continuous video pattern. | X | X | | | | T | C | OT&E/SD | ACN-220 ASM-630 | 6.2.1.2 |
| 07 | 3.2.1.4.2 Select Code Decoder - The SSRBD decoder control panel shall properly select the 10 select channels. | | X | | | | T | C | | ACN-220 | 6.2.1.2 |

| OT&E Req. no. | Requirements doc. title, para. no. & statement | Test Levels: Operation OT&E/SD | Test Levels: System OT&E/INT | Test Location & Verif Method: TC | KS | FA | FAC | Critical C/NC | Test Plan Cross Ref. | Support Organi-zation | MTP Reference |
|---|---|---|---|---|---|---|---|---|---|---|---|
| 08 | 3.2.1.4.3<br>Selectable Codes -<br>The SSRBD shall display the proper symbols per 10 Ident/ Select code select switches. | | X | | | | T | C | | ACN-220 | 6.2.1.2 |
| 09 | 3.2.1.4.3.1<br>Special Emergency Codes -<br>The SSRBD shall automatically display special emergency symbols. | | X | | | | T | C | | ACN-220 | 6.2.1.2 |
| 10 | 3.2.1.4.3.1.1<br>Emergency Code Indications -<br>The SSRBD shall illuminate emergency code indicators and alarms. | X | X | | | | T | C | OT&E/SD | ACN-220<br>ASM-630 | 6.2.1.2 |
| 11 | 3.2.1.4.3.2.3<br>Raw Video -<br>The SSRBD shall display raw beacon video when the raw video switch is enabled. | X | X | | | | T | C | OT&E/SD | ACN-220<br>ASM-630 | 6.2.1.1<br>6.2.1.2 |
| 12 | 4.2.8<br>Integration Tests -<br>The SSRBD shall operate with the following NAS systems:<br>a. ATCBI-3,4,5<br>b. ASR9/SCIP<br>c. RML-1,2,3,4,6<br>d. BRITE | X | X | | | | T | C | OT&E/SD | ACN-220<br>ASM-630 | 6.2.1.1 |

| OT&E Req. no. | Requirements doc. title, para. no. & statement | Test Levels: Operation OT&E/SD | Test Levels: System OT&E/INT | Test Location & Verif Method: TC | KS | FA | FAC | Critical C/NC | Test Plan Cross Ref. | Support Organi-zation | MTP Reference |
|---|---|---|---|---|---|---|---|---|---|---|---|
| | NAS-MD-110 Requirements | | | | | | | | | | |
| 13 | 6.3.1 Operational Suitability - The SSRBD shall meet operational requirements when operated and maintained by the users. | X | X | | | | A | C | OT&E/SD | ACN-220 ASM-630 | 7.2.1 |
| 14 | 6.3.3 Operational Effectiveness - The effectiveness of the user's operational impact of the SSRBD shall be assessed. | X | X | | | | A | C | OT&E/SD | ACN-220 ASM-630 | 7.2.2 |