COPY 2

TN
91/38

technical note technical note

Solid-State Radar Beacon Decoder (SSRBD) Operational Test and Evaluation (OT&E)/ Integration Test Procedures

FEDERAL AVIATION ADMINISTRATION
JAN 29 1992
TECHNICAL CENTER LIBRARY
ATLANTIC CITY INT'L AIRPORT, NJ 08405

Thomas D. Bratton

January 1992

DOT/FAA/CT-TN91/38

Document is on file at the Technical Center Library, Atlantic City International Airport, N.J. 08405

U.S. Department of Transportation
Federal Aviation Administration

Technical Center
Atlantic City International Airport, N.J. 08405

DOT/FAA
/CT-TN9
1/38
c.2

FAA Technical Center
00016519

NOTICE

This document is disseminated under the sponsorship of the U.S. Department of Transportation in the interest of information exchange. The United States Government assumes no liability for the contents or use thereof.

The United States Government does not endorse products or manufacturers. Trade or manufacturers' names appear herein solely because they are considered essential to the objective of this report.

Technical Report Documentation Page

1. Report No.	2. Government Accession No.	3. Recipient's Catalog No.
DOT/FAA/CT-TN91/38		

4. Title and Subtitle	5. Report Date
SOLID-STATE RADAR BEACON DECODER (SSRBD) OPERATIONAL TEST AND EVALUATION (OT&E)/ INTEGRATION TEST PROCEDURES	January 1992
	6. Performing Organization Code: ACN-220
7. Author(s): Thomas D. Bratton	8. Performing Organization Report No.: DOT/FAA/CT-TN91/38
9. Performing Organization Name and Address: Federal Aviation Administration, Technical Center, Atlantic City International Airport, NJ 08405	10. Work Unit No. (TRAIS)
	11. Contract or Grant No.
12. Sponsoring Agency Name and Address: U.S. Department of Transportation, Federal Aviation Administration, Technical Center, Atlantic City International Airport, NJ 08405	13. Type of Report and Period Covered: Technical Note
	14. Sponsoring Agency Code

15. Supplementary Notes

16. Abstract

This document defines the Solid-State Radar Beacon Decoder (SSRBD) operational and integration test procedures that will be conducted at the Federal Aviation Administration (FAA) operational facilities. These procedures will be executed following the contractor site acceptance test. Each SSRBD test configuration is addressed in conjunction with the associated interfaces which will be required to perform the testing in as near an operational environment as possible. The SSRBD operational and integration requirements will be tested and evaluated from a user's perspective as the test procedures are conducted.

17. Key Words	18. Distribution Statement
Solid State Radar Beacon Decoder (SSRBD) Operational Test and Evaluation (OT&E) Integration	Document is on file at the Technical Center Library, Atlantic City International Airport, NJ 08405

19. Security Classif. (of this report)	20. Security Classif. (of this page)	21. No. of Pages	22. Price
Unclassified	Unclassified	41	

Form DOT F 1700.7 (8-72) Reproduction of completed page authorized

TABLE OF CONTENTS

		Page
EXECUTIVE SUMMARY		v
1.	INTRODUCTION	1
	1.1 Purpose	1
	1.2 Scope	1
2.	LOCATION AND SCHEDULE	2
3.	REFERENCE DOCUMENTS	3
4.	MANNING AND RESPONSIBILITIES	3
5.	TEST SUPPORT HARDWARE AND EQUIPMENT	3
6.	SSRBD OT&E/INTEGRATION TEST PROCEDURES	4
	6.1 Test Objectives	4
	6.2 Test Setup	6
	6.3 Data Recordings and Reduction Analysis	13

APPENDICES

A - SSRBD OT&E/Integration Test Procedure Test Verification Requirement Traceability Matrix (TVRTM)

B - Beacon Test Set Setup

C - SSRBD OT&E/Integration Test Mission Log

D - SSRBD OT&E/Integration Test Conduct Log

E - SSRBD OT&E/Integration T&E ATC Questionnaire

F - SSRBD OT&E/Integration Test Summary Log

G - SSRBD OT&E/Integration Test Anomaly Report

LIST OF ILLUSTRATIONS

Figure		Page
2-1	Test Activity Schedule	2
6.2-1	SSRBD/ASR-9/SCIP Test Configuration Kansas City, MO	7
6.2-2	SSRBD/RML Test Configuration Philadelphia/Willow Grove, PA	8
6.2-3	SSRBD/ATCBI-3/BRITE Test Configuration St. Thomas, U.S. Virgin Islands	9
6.2-4	SSRBD/ATCBI-4/D-BRITE Test Configuration Kahului Airport, Kahului, HI	10

LIST OF TABLES

Table		Page
6.2.1-1	Old/New Decoder Test Table	12

EXECUTIVE SUMMARY

The overall instructions for conduct of the Operational Test and Evaluation (OT&E)/Integration of the Solid-State Radar Beacon Decoder (SSRBD) National Airspace System with the (NAS) system are defined in this test procedure.

This document functionally describes the SSRBD NAS operational and integration test procedures in accordance with the SSRBD OT&E/Integration Test Plan. It is written to conduct the SSRBD operational and integration tests in a step-by-step manner. This test and evaluation (T&E) procedure will determine the SSRBD operational effectiveness and operational suitability when the air traffic control (ATC) and field personnel perform their tasks. Performance of the SSRBD will be compared to the existing beacon decoders.

There is no SSRBD delivery to the Federal Aviation Administration (FAA) Technical Center for OT&E/Integration T&E. The step-by-step procedures for the SSRBD OT&E/Integration tests will describe the procedures to be conducted for each test configuration. The first test configuration will be tested at the FAA facility at Kansas City International Airport. The completion of the T&E for the remainder of the SSRBD test configurations will be done as described in the OT&E/Integration Test Plan.

1. INTRODUCTION.

In response to a need to replace obsolete, tube-type radar beacon decoders, the Federal Aviation Administration (FAA) has developed plans to deploy Solid State Radar Beacon Decoders (SSRBD). As part of the NAS system, the SSRBD will be compatible with the existing Air Traffic Control Radar Beacon System (ATCRBS) subsystems. It will display raw beacon video or decoded beacon symbols for air traffic control (ATC) use independent of the Automated Radar Terminal System (ARTS).

Following the SSRBD factory acceptance testing, the contractor will deliver and install the first production system at the first FAA facility. The contractor will then proceed with the Site Acceptance Test (SAT) which constitutes FAA acceptance of the first production article. Once the SSRBD is accepted, ACN-220 shall conduct operational and integration tests at the FAA facility. ASM-630 will ensure that an accurate inventory of deliverables is recorded. Testing is designed to insure that the SSRBD is (1) in compliance with system requirements, (2) is operationally suitable, and (3) is properly integrated into the NAS from a user's perspective.

1.1 PURPOSE.

The purpose of this document is to define the operational and integration test procedures that will be conducted at each required operational site. This testing will be performed in accordance with the OT&E/Integration Test Plan.

Integration testing will ensure that the SSRBD meets the requirements of the NAS system during the test and evaluation (T&E) defined in FAA-E-2825A. Operational testing will focus on determining to what degree the SSRBD meets or exceeds the operational characteristics of the present tube-type radar beacon decoders. It will determine if any new capabilities made available through the SSRBD pose a detriment/impact to ATC operations from a user's perspective.

1.2 SCOPE.

This procedure defines the SSRBD operational and integration test instructions to be conducted at the FAA facilities and the configurations to be used for testing. It defines the use of test equipment, test personnel responsibilities, and beacon decoder setups required to conduct the NAS operational and integration tests.

The function of the SSRBD system is to provide a backup to the Automated Radar Terminal System (ARTS), to accept input beacon replies from Air Traffic Control Radar Beacon Systems (ATCRBS), and to decode those replies and process appropriate symbols on available ATC displays.

2. LOCATION AND SCHEDULE.

The SSRBD NAS OT&E/Integration testing schedule flow from the SSRBD Master Test Plan, the OT&E/Integration Test Plan schedules and the contract delivery and acceptance dates. The FAA Technical Center OT&E/Integration testing will begin following the successful completion of the contractor installation and checkout, site acceptance testing, and Contract Acceptance Inspection (CAI). The schedule is depicted in figure 2-1. The schedule is shown with the month of year and months after contract for sequence tracking of the T&E activities. The SSRBD test configurations are shown in this schedule. Figure 2-1 defines the breakdown of the SSRBD test configuration locations and test duration.

	1991									1992				
Month of year	04	05	06	07	08	09	10	11	12	01	02	03	04	05
Months after contract	19	20	21	22	23	24	25	26	27	28	29	30	31	32
Scheduled Activities	a	b	c						d	e	f	g	h	i

a. Contract Acceptance Inspection (CAI)

b. SSRBD/ASR-9/SCIP OT&E/Integration - 1 week
Kansas City International Airport,
FAA Facility

c. SSRBD/ASR-9/SCIP OT&E/Integration Report - 1 month

d. SSRBD/RML/BRITE OT&E/Integration - 1 week
Philadelphia International Airport,
FAA Facility

e. SSRBD/RML/BRITE OT&E/Integration Report - 1 month

f. SSRBD/ATCBI-4/BRITE OT&E/Integration - 1 week
Kahului Airport, FAA Facility

g. SSRBD/ATCBI-4/BRITE OT&E/Integration Report - 1 month

h. SSRBD/ATCBI-3/BRITE OT&E/Integration - 1 week
St. Thomas King Airport, FAA Facility

i. SSRBD/ATCBI-3/BRITE OT&E/Integration Report - 1 month

Legend:

Airport Surveillance Radar (ASR)
Surveillance and Communication Interface Processor (SCIP)
Radar Microwave Link (RML)
Bright Radar Indicator Tower Equipment (BRITE)
Air Traffic Control Beacon Interrogator (ATCBI)

FIGURE 2-1. TEST ACTIVITY SCHEDULE

There will be a pretest and post-test review for each test configuration conducted as described in the SSRBD OT&E/Integration Test Plan, section 5.2. The pretest review will ensure that appropriate requirements are met prior to testing. The post-test review will determine if all test requirements have been met and report any test anomalies and test outcome.

3. REFERENCE DOCUMENTS.

A list of applicable documentation and reference materials which relate to the contents of this procedure is provided below.

DTFA01-89-C-00053	Solid State Radar Beacon Decoder Contract
FAA-E-2825A	Solid State Radar Beacon Decoder Specification
FAA-STD-024A	Preparation of Test and Evaluation Documentation
FAA Order 1810.4A	FAA NAS Test and Evaluation Program
NAS-MD-110	Test Terms and Definitions for the National Airspace System.
DOT/FAA/CT-TN91/33	SSRBD Master Test Plan
DOT/FAA/CT-TN91/30	SSRBD OT&E/Integration Test Plan

4. MANNING AND RESPONSIBILITIES.

All personnel involved with this SSRBD OT&E/Integration testing will have been familiar with the existing beacon decoders. The training required by the air traffic controllers is minimal. The decoding capabilities of the SSRBD and the reply code selection of the controllers are similar to the existing beacon decoders. Section 4 of the OT&E/Integration Test Plan contains a list of individual responsibilities to conduct this test. The testing will require support from an airway facilities technician and an air traffic controller for each test site. The airway facilities technician will support with the beacon test set at the radar facilities. The air traffic controller will support in evaluating the SSRBD test results at the terminal facilities.

5. TEST SUPPORT HARDWARE AND EQUIPMENT.

The support hardware required to conduct the SSRBD OT&E/Integration test are as follows:

a.	Beacon Video Test Set	- Type FA-9410
b.	Beacon radio frequency (RF) Test Set	- Type FA-9411
c.	ARTS Display	- Site specific
d.	Oscilloscope	- Type Tektronix 2430A or equivalent
e.	Airborne Transponders	- Type ATCRBS
f.	ATCBI System	- Site specific
g.	ASR	- Site specific
h.	SCIP	- Site specific
i.	BRITE	- Site specific

These support hardware and equipment are in accordance with the SSRBD OT&E/Integration Test Plan, section 6.1.3, 6.2.3, and 6.3.3.

6. SSRBD OT&E/INTEGRATION TEST PROCEDURES.

The OT&E will be conducted to determine the SSRBD system operational suitability and operational effectiveness. The operational testing focuses on evaluating the SSRBD system from a user's perspective. This evaluation will be performed to detect improvements, as well as degradation that may be associated with the SSRBD when compared to the existing ATCBI-3 decoders. The information documented in the summary sheets and questionnaires will be compiled and an overall assessment of the SSRBD system will be performed to determine its operational impact.

The following information will be utilized in conjunction with additional details to perform the test procedures: (1) test objective, (2) test setup, and (3) test conduct. The test procedures will be conducted in two parts. The first part of the test will use simulated replies from a beacon test set. The second part of the test will use live targets of opportunity. The test procedures provided in the following sections will be generic to all SSRBD test configurations.

6.1 TEST OBJECTIVES.

The test objectives are to verify that the SSRBD can properly receive beacon video from each required NAS subsystem and process appropriate reply symbols to displays. The test objectives are also based on the TVRTM requirements in appendix A. The test objectives are:

a. Verify that the SSRBD decodes all mode 3/A replies. Requirements 02, 04, 05, 06, 07, 08, 09, 10, 11, 12, 13, 22, 23, 24, and 25 of the TVRTM.

b. Verify that the SSRBD mode C fill-in eliminates the holes in the video display. Requirements 01, 02, 14, 15, 23, 24, and 25 of the TVRTM.

c. Verify that the SSRBD automatically decodes emergency replies. Requirements 09, 10, 11, 18, 19, 20, 23, 24, and 25 of the TVRTM.

d. Verify that the SSRBD detects and properly decodes live target crossings. Requirements 01, 02, 14, 16, 17, 21, 22, 23, 24, and 25 of the TVRTM.

e. Verify that a single slash is displayed for uncontrolled aircraft. Requirements 01, 02, 04, 14, 16, 17, 23, 24, and 25 of the TVRTM.

f. Verify that a double slash is displayed for controlled aircraft. Requirements 01, 02, 05, 14, 16, 17, 23, 24, and 25 of the TVRTM.

g. Verify that a triple slash is displayed for unique controlled aircraft. Requirements 01, 02, 06, 14, 16, 17, 23, 24, and 25 of the TVRTM.

h. Verify that a four slash is displayed for unique local controlled aircraft. Requirements 01, 02, 07, 14, 16, 17, 23, 24, and 25 of the TVRTM.

i. Verify that a bloomer is displayed for controlled aircraft with identification. Requirements 01, 02, 08, 14, 16, 17, 23, 24, and 25 of the TVRTM.

j. Verify that a double bloomer is displayed for 7700 emergency aircraft. Requirements 01, 02, 09, 14, 16, 17, 18, 19, 23, 24, and 25 of the TVRTM.

k. Verify that a wide bloomer is displayed for 7600 emergency aircraft. Requirements 01, 02, 10, 14, 16, 17, 18, 19, 23, 24, and 25 of the TVRTM.

l. Verify that a double slash bloomer is displayed for 7500 emergency aircraft. Requirements 01, 02, 11, 14, 16, 17, 18, 19, 23, 24, and 25 of the TVRTM.

m. Verify that a bloomer slash is displayed for unique controlled aircraft with identification. Requirements 01, 02, 12, 14, 16, 17, 23, 24, and 25 of the TVRTM.

n. Verify that a slash bloomer slash is displayed for unique local controlled aircraft with identification. Requirements 01, 02, 13, 14, 16, 17, 23, 24, and 25 of the TVRTM.

o. Verify the operational impact of the new triple slash symbol. Requirements 01, 02, 06, 14, 16, 17, 23, 24, and 25 of the TVRTM.

p. Verify the operational impact of the new four slash symbol. Requirements 01, 02, 07, 14, 16, 17, 23, 24, and 25 of the TVRTM.

q. Verify the operational impact of the new wide bloomer symbol. Requirements 01, 02, 10, 14, 16, 17, 18, 19, 23, 24, and 25 of the TVRTM.

r. Verify the operational impact of the new double slash bloomer symbol. Requirements 01, 02, 11, 14, 16, 17, 18, 19, 23, 24, and 25 of the TVRTM.

s. Verify the operational impact of the new bloomer slash symbol. Requirements 01, 02, 12, 14, 16, 17, 23, 24, and 25 of the TVRTM.

t. Verify the operational impact of the new slash bloomer slash symbol. Requirements 01, 02, 13, 14, 16, 17, 23, 24, and 25 of the TVRTM.

u. Verify the operational impact of the new digital select beacon code entries. Requirements 02, 03, 16, 23, 24, and 25 of the TVRTM.

v. Verify that the SSRBD decoder control panel maintains the selectable codes upon a power failure. Requirements 03, 14, 16, 17, 23, 24, and 25 of the TVRTM.

w. Verify that the SSRBD can display raw video. Requirements 01, 02, 14, 16, 20, 23, 24, and 25 of the TVRTM.

6.2 TEST SETUP.

The block diagrams in figures 6.2-1, 6.2-2, 6.2-3, and 6.2-4 depict the SSRBD test configurations. The SSRBD will be interfaced and tested with the following unique NAS subsystems:

a. ATCBI-3, ATCBI-4
b. ASR-9/SCIP (most sites have ATCBI-5 for beacon input)
c. RML
d. BRITE/Digital Bright Radar Indicator Tower Equipment (D-BRITE)

The setup of the beacon test set is described in appendix B.

The SSRBD will have been installed and CAI done at the site before operational and integration testing begins. The SSRBD video output should be connected to the BEACON connector of the display which will be used for symbol observations. The old decoder video output should be connected to the ANALOG connector of the same display. The SSRBD range cable should be connected to the RANGE connector of the same display. The existing beacon decoder range cable should be hooked up to the RANGE connector of another display.

The setup of the new decoder control panel will represent the setup which air traffic controllers use to control aircraft. This setup of the old and new decoders will have channels 1, 2, and 3 with codes 1100, 2200, and 3300, respectively, throughout the entire test.

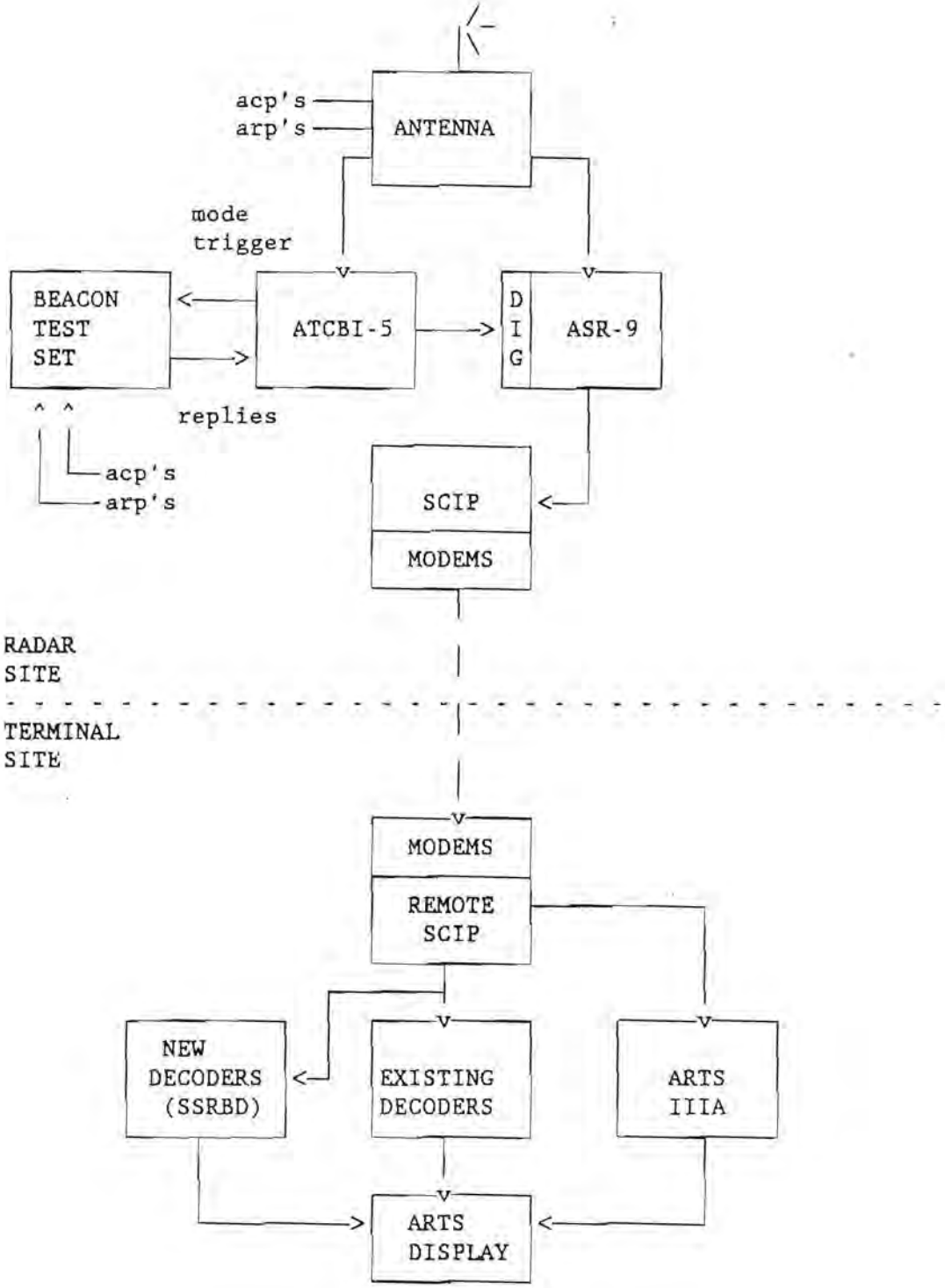

LEGEND:
acp - azimuth change pulse
arp - azimuth reference pulse

FIGURE 6.2-1. SSRBD/ASR-9/SCIP TEST CONFIGURATION
KANSAS CITY, MO

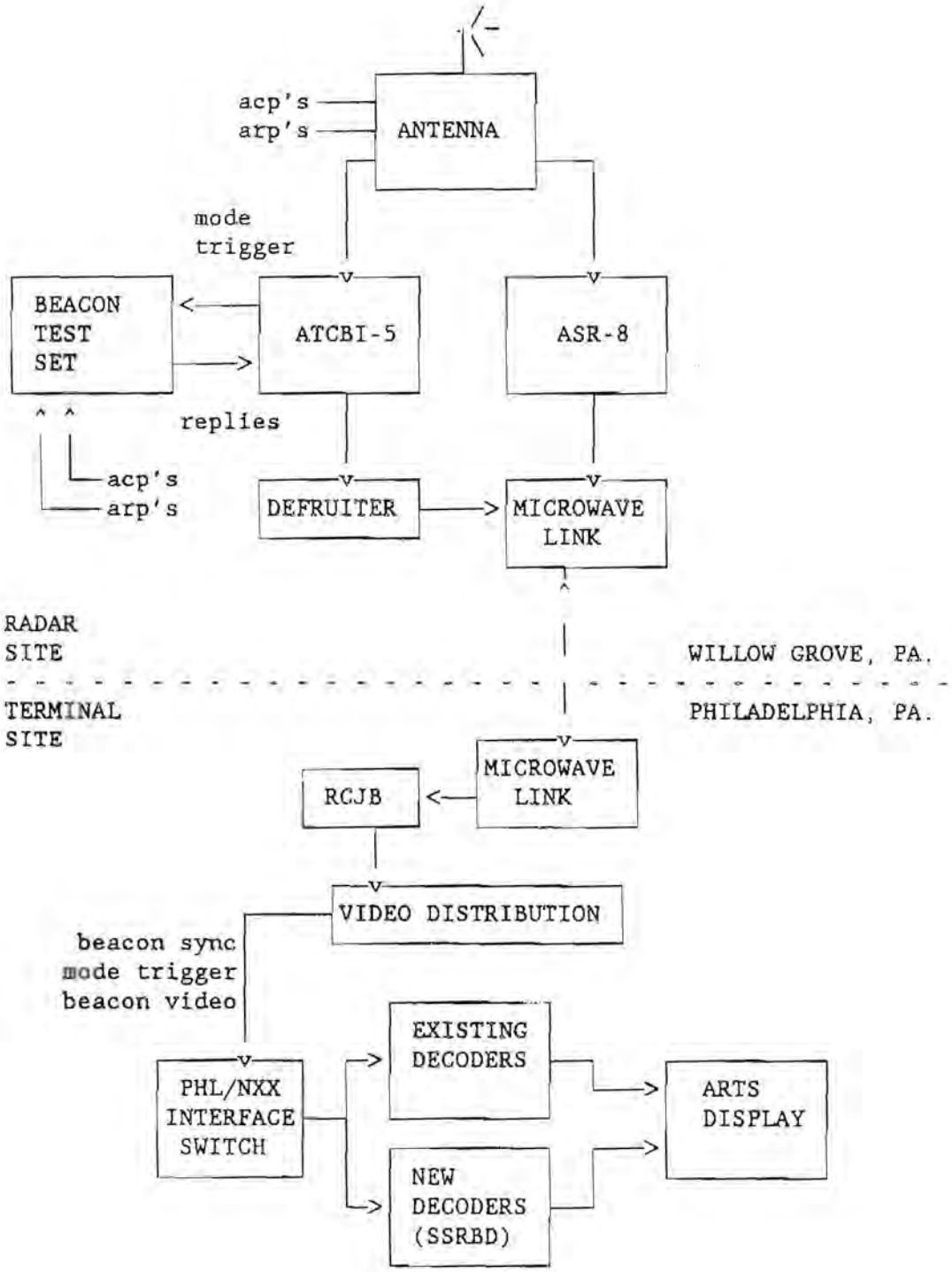

LEGEND:
acp - azimuth change pulse
arp - azimuth reference pulse

FIGURE 6.2-2. SSRBD/RML TEST CONFIGURATION
PHILADELPHIA/WILLOW GROVE, PA

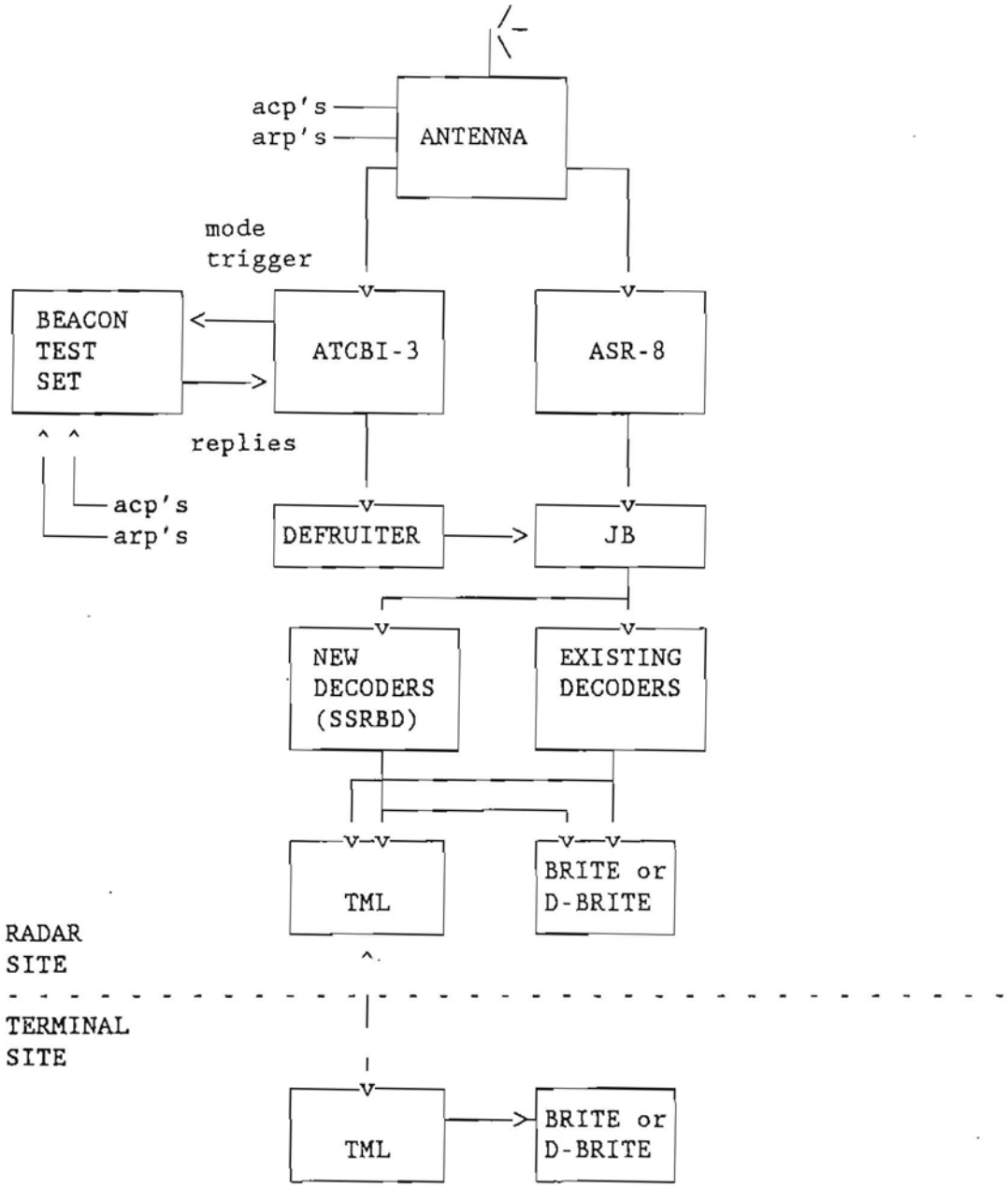

LEGEND:
acp - azimuth change pulse
arp - azimuth reference pulse

FIGURE 6.2-3 SSRBD/ATCBI-3/BRITE TEST CONFIGURATION
ST. THOMAS, U.S. VIRGIN ISLANDS

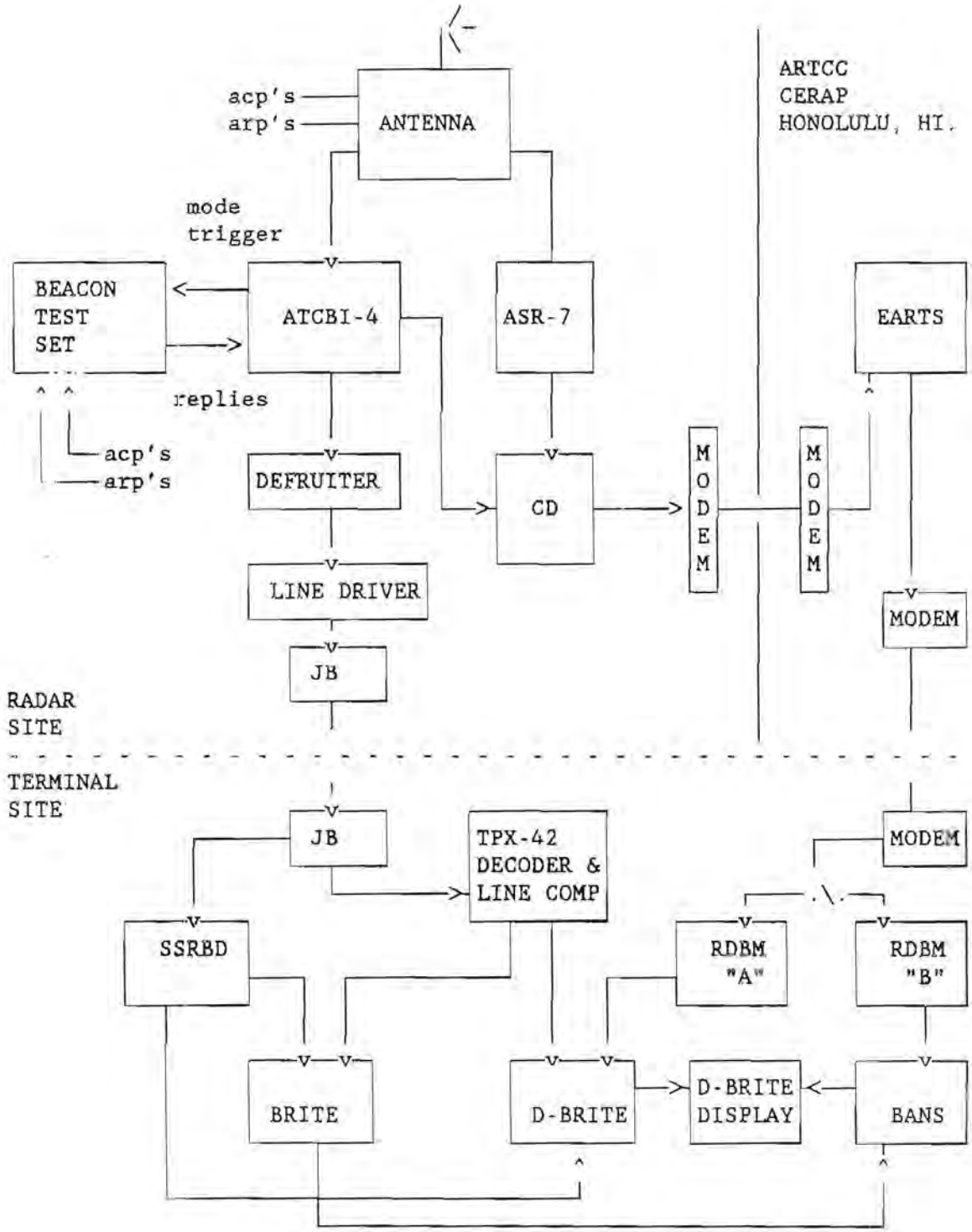

LEGEND:
acp - azimuth change pulse
arp - azimuth reference pulse

FIGURE 6.2-4. SSRBD/ATCBI-4/D-BRITE TEST CONFIGURATION
KAHULUI AIRPORT, KAHULUI, HI

6.2.1 Test Conduct.

A pretest review will be held before the actual conduction of the tests. Section 5.2.1 of the test plan contains the pretest review list. The Test Mission Log given in appendix C shall be completed by the test manager during the pretest review. This log will contain any open items or discrepancies from the test procedure. The beacon test set will have been set up as described in appendix B. A description of how to generate reply code trains is also listed in appendix B. As each test is conducted with simulated replies, the results will be recorded in table 6.2.1-1. The test manager will record any test anomalies in the test conduct log given in appendix D.

The following steps in table 6.2.1-1 shall be conducted for simulated replies. This test involves the participating air traffic controller to record the actual test results in the appropriate space provided in the table.

a. Set the codes on both decoders as follows:

CHAN 1 1100
CHAN 2 2200
CHAN 3 3300

b. Set the test set with the code as given in the table and a Special Pulse Identifier (SPI) pulse when required to do so.

c. Set the common/system (C/S), select (SEL), and identification (ID) switch combination as given in the table for the respective channels on the old and new decoders.

Note: The old decoder is set to the C/S mode when the ALL switch is off.

d. Change the BEACON/ANALOG switch on the display so that only one decoder output is displayed at a time.

Note: When viewing the symbols, ensure that the same constant, desired range is set on both displays.

e. Observe each decoder output symbol, when displayed, and record the results in the appropriate column of the test table.

f. Upon completion of all the steps in the table, the beacon test set can be turned off.

TABLE 6.2.1-1. OLD/NEW DECODER TEST TABLE

TEST STEP NO.	BEACON TEST SET		OLD/NEW DECODERS				OLD DECODER OUTPUT		NEW DECODER OUTPUT	
	CODE	SPI	CHAN NO.	C/S	SEL	ID	EXPECT	ACTUAL	EXPECT	ACTUAL
1	1100		1	ON	OFF	OFF	S		S	
2	1100		1	ON	ON	OFF	S		S	
3	1100		1	ON	OFF	ON	SS		SSS	
4	1100		1	OFF	OFF	OFF	N/A		N/A	
5	1100		1	OFF	ON	OFF	S		S	
6	1100		1	OFF	OFF	ON	SS		SSS	
7	1100	SPI	1	ON	OFF	OFF	S		S	
8	1100	SPI	1	ON	ON	OFF	S		S	
9	1100	SPI	1	ON	OFF	ON	B		BS	
10	1100	SPI	1	OFF	OFF	OFF	N/A		N/A	
11	1100	SPI	1	OFF	ON	OFF	B		B	
12	1100	SPI	1	OFF	OFF	ON	B		BS	
13	2200		2	ON	OFF	OFF	S		S	
14	2200		2	ON	ON	OFF	S		S	
15	2200		2	ON	OFF	ON	SS		SSSS	
16	2200		2	OFF	OFF	OFF	N/A		N/A	
17	2200		2	OFF	ON	OFF	S		S	
18	2200		2	OFF	OFF	ON	SS		SSSS	
19	2200	SPI	2	ON	OFF	OFF	S		S	
20	2200	SPI	2	ON	ON	OFF	S		S	
21	2200	SPI	2	ON	OFF	ON	B		SBS	
22	2200	SPI	2	OFF	OFF	OFF	N/A		N/A	
23	2200	SPI	2	OFF	ON	OFF	B		B	
24	2200	SPI	2	OFF	OFF	ON	B		SBS	
25	3300		3	ON	OFF	OFF	S		S	
26	3300		3	ON	ON	OFF	S		S	
27	3300		3	ON	OFF	ON	SS		SS	
28	3300		3	OFF	OFF	OFF	N/A		N/A	
29	3300		3	OFF	ON	OFF	S		S	
30	3300		3	OFF	OFF	ON	SS		SS	
31	3300	SPI	3	ON	OFF	OFF	S		S	
32	3300	SPI	3	ON	ON	OFF	S		S	
33	3300	SPI	3	ON	OFF	ON	B		B	
34	3300	SPI	3	OFF	OFF	OFF	N/A		N/A	
35	3300	SPI	3	OFF	ON	OFF	B		B	
36	3300	SPI	3	OFF	OFF	ON	B		B	
37	7700			OFF	OFF	OFF	BB		BB	
38	7600			OFF	OFF	OFF	BB		WB	
39	7500			OFF	OFF	OFF	BB		SSB	
40	1220		3	OFF	OFF	ON	SS		SS	
41	1220	SPI	3	OFF	OFF	ON	B		B	

LEGEND: S=single slash; B=bloomer; WB=wide bloomer; N/A=no symbol

The following procedures shall be conducted for live target tests. This test requires the participating air traffic controller to direct an aircraft to respond with a desired code. It also involves the air traffic controller to observe any aircraft crossings on the display. The participating air traffic controller will record his evaluation of each test in the questionnaire provided in appendix E.

Transponder Reply.

a. Set any of the SSRBD channels with a desired code with C/S, SEL, and ID switch combinations, or use the existing three channels already set up.

b. Set the old decoder with the same setup as the SSRBD.

c. Instruct an aircraft to respond with the same code.

d. Change the BEACON/ANALOG switch on the display so that only one decoder output is displayed at a time.

e. Observe each decoder output symbol, when displayed, and record the results in the questionnaire provided.

f. Turn the SSRBD power switch off and back on.

g. Observe the control panel for the existance of the same settings and record the results in the questionnaire provided.

h. Observe on the display that the target symbol is still displayed and record the results in the questionnaire provided.

Target Crossings.

a. Clear all channels on the SSRBD decoder control panel, set ID and SEL off and turn the C/S switch on.

b. Clear all channels on the old decoder control panel, set ID and SEL off, and turn the ALL channel switch off.

c. Change the BEACON/ANALOG switch on the display to view the new decoder symbols.

d. Observe on the display any instances of target crossings (two separate symbols) and record the results in the questionnaire provided.

6.3 Data Recordings and Reduction Analysis.

The data collected from video displays will be recorded in test table 6.2.1-1. The air traffic controller will evaluate the SSRBD operations and test results and record the evaluation in a questionnaire provided in appendix D. The observations of the air traffic controller will be evaluated and documented in the test report. During the post-test review, the test manager will evaluate the tests conducted and fill out a test summary log provided in appendix F. The data analysis shall be performed by comparing actual results with the expected results, the old and new

decoder operations, and the old and new decoder output results. Any discrepancies will be noted and documented in the test anomaly report provided in appendix G. The post-test review will also verify that all the requirements of the objectives and the TVRTM have been met. The ATC questionnaire form will be used in determining the SSRBD operational effectiveness and operational suitability when it is integrated into the NAS. It will determine whether the SSRBD offers the same, improved, or degraded performances relative to the present ATCBI beacon decoders. The final test results will be documented in a test report as described in section 5.1.8 of the test plan.

APPENDIX A

SSRBD OT&E/INTEGRATION TEST PROCEDURE
TEST VERIFICATION REQUIREMENT TRACEABILITY MATRIX (TVRTM)

TVRTM Title: SSRBD OT&E/INTEGRATION TEST PROCEDURE
TVRTM Legend:

Operational and System Test Level
Operational Test & Evaluation (OT&E)/
Shakedown (SD) - (OT&E/SD)
NAS Integration T&E (INT) - (OT&E/INT)

Locations
FAA Technical Center - TC
Key Site - KS
Factory - FA
FAA Facility - FAC

Test Plan Cross Reference
OT&E/Shakedown - OT&E/SD
OT&E/Integration - OT&E/INT

Criticality
Critical - C
Noncritical - NC

Verification Methods
Analysis - A
Demonstration - D
Inspection - I
Test - T
Not Applicable - NA

OT&E Req. no.	Requirements doc. title, para. no. & statement	Test Levels: Operation OT&E/SD	Test Levels: System OT&E/INT	Test Location & Verif Method: TC	KS	FA	FAC	Critical C/NC	Test Plan Cross Ref.	Support Organi-zation	OT&E/Integ Test Plan Reference
	FAA-E-2825A Requirements										
01	3.2.1.1 Line Compensator - The SSRBD line compensator shall compensate for mode triggers and reply video distortions where the use of the site line compensator is not in-line with the SSRBD.	X	X				T	C	OT&E/SD	ACN-220 ASM-630	6.1.5.3 6.3.5.3
02	3.2.1.2 Common Decoder Circuitry - Ensure the common decoder can properly detect and decode selectable replies of modes 3/A and C.		X				T	C		ACN-220	6.1.5.1 6.2.5.1 6.3.5.1

OT&E Req. no.	Requirements doc. title, para. no. & statement	Test Levels: Operation OT&E/SD	Test Levels: System OT&E/INT	Test Location & Verif Method: TC	KS	FA	FAC	Critical C/NC	Test Plan Cross Ref.	Support Organi-zation	OT&E/Integ Test Plan Reference
03	3.2.1.2.4 Control and Transfer - The selected codes on the SSRBD decoder control panel shall be maintained when a power failure or power switch-over occurs.	X	X				T	C	OT&E/SD	ACN-220 ASM-630	6.1.5.1 6.2.5.1 6.3.5.1
04	3.2.1.3 Noncommon Decoder Circuitry Single Slash - The SSRBD shall display a single slash symbol for each uncontrolled aircraft to ATC.		X				T	C		ACN-220	6.1.5.1.1 6.2.5.1.1 6.3.5.1.1
05	3.2.1.3 Noncommon Decoder Circuitry Double Slash - The SSRBD shall display a double slash symbol for each controlled aircraft to ATC		X				T	C		ACN-220	6.1.5.1.1 6.2.5.1.1 6.3.5.1.1
06	3.2.1.3 Noncommon Decoder Circuitry Triple Slash - The SSRBD shall display a triple slash symbol for each unique controlled aircraft to ATC.		X				T	C		ACN-220	6.1.5.1.1 6.2.5.1.1 6.3.5.1.1
07	3.2.1.3 Noncommon Decoder Circuitry Four Slash - The SSRBD shall display a four slash symbol for each unique local controlled aircraft to ATC.		X				T	C		ACN-220	6.1.5.1.1 6.2.5.1.1 6.3.5.1.1

OT&E Req. no.	Requirements doc. title, para. no. & statement	Test Levels: Operation OT&E/SD	Test Levels: System OT&E/INT	Test Location & Verif Method: TC	KS	FA	FAC	Critical C/NC	Test Plan Cross Ref.	Support Organi-zation	OT&E/Integ Test Plan Reference
08	3.2.1.3 Noncommon Decoder Circuitry Bloomer - The SSRBD shall display a bloomer symbol for each controlled aircraft with Identification to ATC.		X				T	C		ACN-220	6.1.5.1.1 6.2.5.1.1 6.3.5.1.1
09	3.2.1.3 Noncommon Decoder Circuitry Double Bloomer - The SSRBD shall display a double bloomer symbol for each 7700 emergency aircraft to ATC.		X				T	C		ACN-220	6.1.5.1.2 6.2.5.1.2 6.3.5.1.2
10	3.2.1.3 Noncommon Decoder Circuitry Wide Bloomer - The SSRBD shall display a wide bloomer symbol for each 7700 emergency aircraft to ATC.		X				T	C		ACN-220	6.1.5.1.2 6.2.5.1.2
11	3.2.1.3 Noncommon Decoder Circuitry Double Slash Bloomer - The SSRBD shall display a double slash bloomer symbol for each 7500 emergency aircraft to ATC.		X				T	C		ACN-220	6.1.5.1.2 6.2.5.1.2 6.3.5.1.2
12	3.2.1.3 Noncommon Decoder Circuitry Bloomer Slash - The SSRBD shall display a slash bloomer slash symbol for each unique local controlled aircraft with Identification to ATC.		X				T	C		ACN-220	6.1.5.1.1 6.2.5.1.1 6.3.5.1.1

OT&E Req. no.	Requirements doc. title, para. no. & statement	Test Levels: Operation OT&E/SD	Test Levels: System OT&E/INT	Test Location & Verif Method: TC	KS	FA	FAC	Critical C/NC	Test Plan Cross Ref.	Support Organi-zation	OT&E/Integ Test Plan Reference
13	3.2.1.3 Noncommon Decoder Circuitry Slash Bloomer Slash - The SSRBD shall display a slash bloomer slash symbol for each unique local controlled aircraft with Identification to ATC.		X				T	C		ACN-220	6.1.5.1.1 6.2.5.1.1 6.3.5.1.1
14	3.2.1.3.1 Output Level Control - Any of the eight SSRBD PPI connectors shall drive the existing NAS system displays.		X				I	NC		ACN-220	6.1.5.1 6.2.5.1 6.3.5.1
15	3.2.1.4.1.3 Inhibit - The SSRBD shall provide mode C fill-in of the existing ATCBI mode 3/A and C interlace pattern to generate a full mode 3/A video symbol.	X	X				T	C	OT&E/SD	ACN-220 ASM-630	6.1.5.1.1 6.2.5.1.1
16	3.2.1.4.2 Select Code Decoder The SSRBD decoder control panel shall properly select codes on all 10 select channels.		X				T	C		ACN-220	6.1.5.1 6.2.5.1 6.3.5.1
17	3.2.1.4.3 Selectable Codes - The SSRBD shall display the proper symbols per 10 Ident/ Select code select switches.		X				T	C		ACN-220	6.1.5.1 6.2.5.1 6.3.5.1

OT&E Req. no.	Requirements doc. title, para. no. & statement	Test Levels: Operation OT&E/SD	Test Levels: System OT&E/INT	Test Location & Verif Method: TC	KS	FA	FAC	Critical C/NC	Test Plan Cross Ref.	Support Organi-zation	OT&E/Integ Test Plan Reference
18	3.2.1.4.3.1 Special Emergency Codes - The SSRBD shall automatically display special emergency symbols.		X				T	C		ACN-220	6.1.5.1.2 6.2.5.1.2 6.3.5.1.2
19	3.2.1.4.3.1.1 Emergency Code Indications - The SSRBD shall illuminate emergency code indicators and alarms.	X	X				T	C	OT&E/SD	ACN-220 ASM-630	6.1.5.1.2 6.2.5.1.2 6.3.5.1.2
20	3.2.1.4.3.2.3 Raw Video - The SSRBD shall display raw beacon video when the raw video switch is enabled to ATC.	X	X				T	C	OT&E/SD	ACN-220 ASM-630 ASM-630	6.1.5.1 6.2.5.1 6.3.5.1
21	3.2.1.4.2.2 Decoder Limits - The SSRBD shall detect and decode aircraft crossings and display the symbols properly to ATC.	X	X				T	C	OT&E/SD	ACN-220 ASM-630	6.1.5.1.3 6.2.5.1.3 6.3.5.1.3
22	3.2.1.4.3.2 Reply Codes - The ATC shall control aircraft to respond with a desired code and select it with the decoder control panel.	X	X				T	C	OT&E/SD	ACN-220 ASM-630	6.1.5.2 6.2.5.2 6.3.5.2

OT&E Req. no.	Requirements doc. title, para. no. & statement	Test Levels: Operation OT&E/SD	Test Levels: System OT&E/INT	Test Location & Verif Method: TC	KS	FA	FAC	Critical C/NC	Test Plan Cross Ref.	Support Organi-zation	OT&E/Integ Test Plan Reference
23	4.2.8 Integration Tests - The SSRBD shall operate with the following NAS systems: a. ATCBI-3,5 b. ASR9/SCIP c. RML d. BRITE	X	X				T	C	OT&E/SD	ACN-220 ASM-630	6.1.5.3 6.3.5.3
	NAS-MD-110 Requirements										
24	6.3.1 Operational Suitability - The SSRBD shall meet operational requirements when operated and maintained by the users.	X	X				A	C	OT&E/SD	ACN-220 ASM-630	6.1.6 6.2.6 6.3.6
25	6.3.3 Operational Effectiveness - The effectiveness of the user's operational impact of the SSRBD shall be assessed.	X	X				A	C	OT&E/SD	ACN-220 ASM-630	6.1.6 6.2.6 6.3.6

APPENDIX B

BEACON TEST SET SETUP

BEACON TEST SET SETUP

The beacon test set will be located at the radar facility at each airport. The beacon test set will be already hooked up to the ATCBI system. It will require that the ACP's, ARP's, and X-mode trigger are connected to the test set. By using the X-mode trigger, replies will only be generated during the mode 3/A sweep. When the SSRBD is tested with the ATCBI-3 system, the existing radar facilities technician will need to wire a coaxial cable to the X-mode trigger test point. Ensure that the ATCBI system STAGGER switch is in the disabled mode. The following describes the setup of the video and RF test portion of the test set.

The azimuth generator settings are done as follows:

1. The ACP's and ARP's from the existing antenna should be connected to the ACP IN and ARP IN connectors of the test set.

2. Set the AZIMUTH GATE switch to SGL mode for single display at the display site.

3. Set the azimuth delay accordingly to the desired azimuth as requested by the participating air traffic controller.

The reply trigger settings are done as follows:

1. The X-mode trigger output from the ATCBI system should be connected to the EXT TRIG of reply 1 connector.

2. The TRIG function of reply 1 should be set to EXT to be triggered from the sensitive X-mode trigger.

3. The reply 1 range delay should be set accordingly with the desired range as requested by the participating air traffic controller.

The RF generator portion of the test set should be set as follows:

1. The video output (CMPST VIDEO) connector should be connected to the EXT MOD connector of the RF generator.

2. The RF OUT connector of the RF generator should be connected to the 30 dB DIR IN of the ATCBI system.

3. The RF frequency should be set to 1090 MHz.

4. The RF generator OUTPUT ATTEN signal should be set to -30 dBm.

5. The RF generator FUNCTION switch should be set to PM.

A reply code train can be generated by doing the following:

1. Set the F1 and F2 thumbwheel switches to the IN position.

2. Set the SPI thumbwheel switches to the IN position only when required.

3. Set the desired code train by changing the numbers on the CODE thumbwheel switches.

APPENDIX C

SSRBD OT&E/INTEGRATION TEST MISSION LOG

SSRBD OT&E/INTEGRATION
TEST MISSION LOG

Date: _____

Attendees: _____ Organization: _____

_____ _____

_____ _____

_____ _____

_____ _____

The objective of the SSRBD OT&E/Integration is described as in section 6.1, of this procedural document. The hardware configuration, figures 6-1a to 6-1d, used for the tests to be conducted, is also shown in section 6.1. Are there any discrepancies or changes which need to be made to the test objectives or the test configurations? (Y/N)_____(If yes, place all required changes made to the procedures or test configurations in the space provided.)

Section 4 of this test procedural document provides a list of test team members and their responsibilities. Are there any changes to be made to the manning and responsibilities section 4? (Y/N)_____(If yes, place all required changes for responsibilities in the space provided.)

Is the beacon test set setup done correctly and ready for testing with the SSRBD? (Y/N)_____(If no, place the required test set setup changes in the space provided.)

Additional space provided on next page.

APPENDIX D

SSRBD OT&E/INTEGRATION TEST CONDUCT LOG

SSRBD OT&E/INTEGRATION
TEST CONDUCT LOG

Test Location: _____ Date: _____
Test Manager: _____

Record any test anomalies found during the conduct of the SSRBD tests below. Include a description of the test conducted and the test problem.

APPENDIX E

SSRBD OT&E/INTEGRATION T&E ATC QUESTIONNAIRE

Air Traffic Control Questionnaire For
Solid State Radar Beacon Decoder
OT&E/Integration T&E

Transponder Reply

When an aircraft is requested to respond with a desired ID code and the decoder control panel is set to the same code, was the expected symbol obtained? (Y/N)_____

How does the setup of the SSRBD to control an aircraft compare with the same for the existing decoders?

Degraded_____ Same_____ Improved_____

Does the decoder control panel maintain its select codes after a power failure? (Y/N)_____

Does the previous symbol still remain on the display after a power failure? (Y/N)_____

Target Crossings.

Are two separate single slashes displayed when crossover occurs? (Y/N)_____

How does the SSRBD detect and display symbols for aircraft crossings compare with the same for the existing decoders?

Degraded_____ Same_____ Improved_____

Air Traffic Control Questionnaire For
Solid State Radar Beacon Decoder
OT&E/Integration T&E
(Continued)

1 - Were all the symbols clearly visible on the display? (Y/N)_____

2 - Did the "mode C fill-in" improve the presentation? (Y/N)_____

3 - Are the SEL/ID indicators on the SSRBD decoder control panel clearly visible? (Y/N)_____

4 - Can the selection of codes be done in a simple manner? (Y/N)_____

5 - Do the new symbols provide meaningful representations? (Y/N)_____

Place an X in the appropriate space that best describes the condition.

6 - How do the symbols of the SSRBD compare with the existing beacon decoder symbols?

Degraded_____ Same_____ Improved_____

7 - How does the SSRBD decoder control panel allow selection of codes compare with the existing beacon decoders?

Degraded_____ Same_____ Improved_____

8 - The old decoder system has thumbwheel switches which stays set even during a power down time. How does the SSRBD decoder control panel maintain its select code compare to the existing one when a power failure exist?

Degraded_____ Same_____ Improved_____

9 - The SSRBD now has the capability to control aircraft with more definitive symbols. How does the selection of only 64 non-discrete mode 3/A codes on the SSRBD allow control of air traffic compared to the existing decoder system which has the capability to select up to 4096 discrete mode 3/A codes?

Degraded_____ Same_____ Improved_____

Air Traffic Control Questionnaire For
Solid State Radar Beacon Decoder
OT&E/Integration T&E
(Continued)

Please answer the following questions as best as possible:

10 - Were there any problems when entering the codes on the SSRBD decoder control panel? If so, please indicate the problems in the space provided.

11 - Were there any display problems when symbols were presented on the display? If so, please indicate the problems in the space provided.

12 - Were there any other problems encountered when using the SSRBD? If so, please indicate those problems in the space provided.

13 - Are there any suggestions or improvements which should be made to the SSRBD?

14 - Do you see any disadvantages of placing the SSRBD into the field? If so, please indicate those disadvantages in the space provided.

15 - Is the SSRBD suitable to be placed into the NAS? If not, please state reason in the space provided.

APPENDIX F

SSRBD OT&E/INTEGRATION TEST SUMMARY LOG

SSRBD OT&E/INTEGRATION
TEST SUMMARY LOG

Date: _____

Manager: _____ Organization: _____

In the space provided below, briefly describe the tests conducted and how you evaluate those tests. If there were any test anomalies, report those in the test anomaly report.

APPENDIX G

SSRBD OT&E/INTEGRATION TEST ANOMALY REPORT

SSRBD OT&E/INTEGRATION
TEST ANOMALY REPORT

Date: _____

Manager: _____ Organization: _____

In the space provided below, report all test anomalies encountered during the tests.