CT
TN
91/
/4

COPY 3

technical note technical note

Runway Visual Range (RVR) Operational Test and Evaluation (OT&E)/Integration Test Plan

Joseph Goslin
Frances A. Mackuse

August 1991

DOT/FAA/CT-TN91/4

Document is on file at the Technical Center Library, Atlantic City International Airport, N.J. 08405

FEDERAL AVIATION ADMINISTRATION
AUG 21 1991
TECHNICAL CENTER LIBRARY
ATLANTIC CITY INTERNATIONAL AIRPORT, N.J. 08405

U.S. Department of Transportation
Federal Aviation Administration

Technical Center
Atlantic City International Airport, N.J. 08405

DOT/FAA
CT-TN
91/4
c. 3

FAA Technical Center
00016490

DOT/FAA Goslin, Joseph, et al.
CT-TN Runway visual range (RVR) oper
91/4 ational test and evaluation ...
c. 2

FAA
TECHNICAL CENTER
Atlantic City, N.J.

NOTICE

This document is disseminated under the sponsorship of the U.S. Department of Transportation in the interest of information exchange. The United States Government assumes no liability for the contents or use thereof.

The United States Government does not endorse products or manufacturers. Trade or manufacturers' names appear herein solely because they are considered essential to the objective of this report.

Technical Report Documentation Page

1. Report No.	2. Government Accession No.	3. Recipient's Catalog No.
DOT/FAA/CT-TN91/4		

4. Title and Subtitle	5. Report Date
RUNWAY VISUAL RANGE (RVR) OPERATIONAL TEST AND EVALUATION (OT&E)/INTEGRATION TEST PLAN	August 1991
	6. Performing Organization Code
7. Author(s) Joseph Goslin, Frances A. Mackuse, ACN-250; Bruce E. Ware, Alanna Randazzo, UAL	8. Performing Organization Report No. DOT/FAA/CT-TN91/4
9. Performing Organization Name and Address U.S. Department of Transportation Federal Aviation Administration Technical Center Atlantic City International Airport, New Jersey 08405	10. Work Unit No. (TRAIS)
	11. Contract or Grant No.
12. Sponsoring Agency Name and Address U.S. Department of Transportation Federal Aviation Administration Technical Center Atlantic City International Airport, New Jersey 08405	13. Type of Report and Period Covered Technical Note
	14. Sponsoring Agency Code

15. Supplementary Notes

16. Abstract

The Runway Visual Range (RVR) system consists of a group of sensors with associated software/firmware, displays, and data distribution links. The data provided by this array of sensors will provide runway visual range at various points of a precision approach runway. These RVR products will be automatically processed and distributed to air traffic controllers. The data is then presented to the pilot by the controller in a numerical format equating to the number of feet forward along the runway that a pilot may be expected to see.

17. Key Words	18. Distribution Statement
Runway Visual Range (RVR) Remote Maintenance Monitoring System Atmospheric Scattering Coefficient Operational Test and Evaluation (OT&E)	Document is on file at the Technical Center Library, Atlantic City International Airport, New Jersey 08405

19. Security Classif. (of this report)	20. Security Classif. (of this page)	21. No. of Pages	22. Price
Unclassified	Unclassified	44	

Form DOT F 1700.7 (8-72) Reproduction of completed page authorized

TABLE OF CONTENTS

	Page
1. INTRODUCTION	1
1.1 Scope	1
1.2 Authority to Change	1
2. APPLICABLE DOCUMENTS	2
2.1 FAA Documents	2
2.2 Other Documents	3
3. OT&E/INTEGRATION PHILOSOPHY	3
4. T&E APPROACH AND CONCEPT	4
4.1 Test Configuration	4
4.2 Test Categories	4
4.3 Critical Requirements	9
4.4 Verification Methods	9
5. TEST PROGRAM FLOW DIAGRAM	10
6. ORGANIZATIONAL ROLES AND RESPONSIBILITIES	10
6.1 Responsibilities	10
6.2 Roles	10
6.3 Support Contractors	12
7. DOCUMENT REQUIREMENTS AND CONTROL	12
7.1 Documentation Tree	12
7.2 Operating and Control Documents	12
8. TRAINING	14
9. TEST SUPPORT	14
9.1 Instrumentation	14
9.2 Data Analysis	17
9.3 Test Site Configuration	17
10. REVIEWS AND REPORTS	17
10.1 Test Readiness Review (TRR)	17
10.2 Test Schedule Status Review (TSSR) Meetings	17
10.3 Post-Test Review	18
10.4 DRR	18
10.5 Quick Look Reports	18
10.6 Final Test Report	18

TABLE OF CONTENTS (Continued)

	Page
11. SCHEDULES	18
12. TVRTM	18
12.1 Column Definitions and Utilization	19
13. ABBREVIATIONS AND ACRONYMS	20

APPENDIXES

A - Runway Visual Range (RVR) Test Verification Requirements Traceability Matrix (TVRTM)

B - Test Discrepancy Reports

C - Test Schedule

LIST OF ILLUSTRATIONS

Figure		Page
4-1	RVR Functional/Physical Interfaces	5
4.1-1	RVR OT&E/Integration Test Configuration	6
5.1-1	RVR OT&E/Integration Test Program Flow Diagram	11
7.1-1	RVR Verification Documentation Tree	13
7.2.3-1	Test Conduct Log	15
7.2.4-1	Test Observer/Monitor Record	16

1. INTRODUCTION.

The Runway Visual Range system (RVR) is a flexible modular system that will provide runway visual range data at various points along a precision approach runway. These data products will be automatically processed and distributed to air traffic controllers. The data is then presented to the pilot by the controller in a numerical format equating to the number of feet forward along a departure or landing runway that the pilot may be expected to see.

The RVR system consists of visibility sensors, an ambient light sensor, runway light intensity monitors, a processor with associated software/firmware, displays, digital data distribution links, and a built-in remote maintenance monitoring capability.

The functions of the RVR system include the data acquisition and processing of the measurement of the atmospheric scattering coefficient, ambient luminance and runway light intensity for RVR product dissemination.

The RVR will provide runway visual range data, updated at least once per minute, at various points of a precision approach runway in accordance with FAA specified siting criteria. RVRs may also be installed on nonprecision runways for takeoff and capacity enhancement reasons. RVRs operate in a variety of configurations, employing varying numbers of visibility sensors and runway light intensity monitors without human attendance.

1.1 SCOPE.

This document provides the overall philosophy and approach to the Operational Test and Evaluation (OT&E)/Integration test of the RVR system. This test plan identifies interface and system-level requirements of the RVR necessary to satisfy the National Airspace System (NAS) OT&E/Integration test requirements contained in the RVR Test Verification Requirements Traceability Matrix (TVRTM) presented in appendix A of this document.

The plan will also identify the test verification methods/requirements that will be required to meet OT&E/Integration test criteria. The information contained within this plan has been structured to provide guidance to support OT&E/Integration testing at one of the designated locations scheduled to receive the RVR system.

1.2 AUTHORITY TO CHANGE.

Modifications/revisions to this plan shall be proposed in writing to the Federal Aviation Administration (FAA) Technical Center Engineering, Test and Evaluation Service. The proposal shall (1) clearly document the section number of the plan, (2) document the information currently contained in the plan, and (3) document the proposed modification. The reason for this proposed modification shall also be defined. The Communications/Navigation/Surveillance Division shall maintain a record of all dispositions and subsequent revisions to the plan.

2. APPLICABLE DOCUMENTS.

This section lists the applicable documentation and reference materials which relate to the contents of this plan, or upon which this plan is based.

2.1 FAA DOCUMENTS.

2.1.1 FAA Specifications.

FAA-E-2772	RVR System Specification (Revision 3) 6/23/87
NAS-SS-1000	Functional and Performance Requirements for the NAS System Specification, Volumes I, III, and V
NAS-SR-1000	NAS System Requirements
NAS-DD-1000	Level One Design Document

2.1.2 FAA Standards.

FAA-STD-024a	Preparation of Test and Evaluation Documentation 8/17/87

2.1.3 FAA Orders.

FAA Order No. 1810.4A	FAA NAS Test and Evaluation Program

2.1.4 Other FAA Documents.

NAS-MD-110	Test and Evaluation (T&E) Terms and Definitions for the NAS 3/27/87
NAS-MD-790	Remote Maintenance Monitoring System (RMMS) Interface Control Document
NAS-MD-791	Guidelines for the Development of Level II Interface Control Documents for RMMS
NAS-MD-792	Operational Requirements for the RMMS

NAS-MD-793	RMS Functional Requirements for the Remote Monitoring Subsystem (RMS)
Master Test Plan	Runway Visual Range (RVR) Master Test Plan

2.2 OTHER DOCUMENTS.

DTFA01-88-C-00024	RVR Contract (mods 1-8)
NAS-IR-33102201	RVR/TCCC
NAS-IR-33109301	RVR/ASOS (ICD dated July 13, 1990)
RVR/MPS IRD	RVR/MPS IRD Teledyne Drawing 861240 Rev. B
RVR/MPS ICD	RVR/MPS ICD Teledyne Drawing 861233 Rev. B
RVR/MDT IRD	RVR/MDT IRD Teledyne Drawing 861241 Rev. B
RVR/MDT ICD	RVR/MDT ICD Teledyne Drawing 861234 Rev. B

3. OT&E/INTEGRATION PHILOSOPHY.

The RVR overall OT&E/Integration philosophy is to verify that the interfaces between the existing NAS system and the RVR, which provides new and improved functional and operational performance capabilities, operates correctly as specified, with no degradation to the NAS operation.

FAA Order 1810.4A delegates the responsibility for OT&E/Integration testing to the Engineering, Test and Evaluation Service, Communications/Navigation/Surveillance Division, ACN-200, Weather and Remote Maintenance Monitoring Systems Branch, ACN-250, at the FAA Technical Center.

The RVR OT&E/Integration test will verify requirements from the NAS-SS-1000, Volumes I-V, and the NAS Interface Requirements Documents (IRD) Verification Requirements Traceability Matrix (VRTM), as identified in the RVR Master Test Plan (MTP) VRTM. The success criteria for these requirements will be detailed in the OT&E/Integration test procedures. The OT&E/Integration testing will include an operational evaluation to assess the operational suitability and effectiveness of the Controller Display (CD) as part of the RVR system. ACN-250 will support the Navigation and Landing Engineering Division (ANN-100) and the Visual Aids Branch (ANN-140) to accomplish the RVR OT&E/Integration Test.

The RVR OT&E/Integration test will be conducted by ACN-250 at the designated operational test site. In accordance with the MTP and 1810.4A, all subsystems identified in this test plan will be tested either by live or electronic means. Upon completion of these testing activities, test results will be analyzed to assure verification of the NAS requirements.

ACN-250 will support ANN-140 in the monitoring of the Factory Acceptance Tests (FAT) and the Site Acceptance Tests (SAT). In agreement with ANN-140, NAS requirements that may be verified during the conduct of the FAT and SAT test activities will not be duplicated.

4. T&E APPROACH AND CONCEPT.

To determine the overall interoperability of the RVR with the NAS environment, OT&E/Integration testing will require testing of the RVR subsystem in an environment as near operational as possible. The term operational relates to the configuration into which the RVR must be integrated. For this reason, both live and/or simulated interfacing subsystems and equipment will be used. To the extent possible, RVR OT&E/Integration testing will be performed using all interconnections/interfaces available and appropriate to the RVR system (see figure 4-1).

4.1 TEST CONFIGURATION.

RVR OT&E/Integration consists of one configuration as shown in figure 4.1-1. Each interconnection/interface within this configuration is defined as a verification category. For ease of identification, a letter has been assigned to each verification category.

4.2 TEST CATEGORIES.

Categories to be tested and verified as satisfactorily interfaced with the RVR as part of the NAS system are:

Category A - Maintenance Processor System (MPS) interface

Category B - Maintenance Data Terminal (MDT) interface

Category C - External Coded Time Source (ECTS) interface (Note: We will not address testing of this category per Case File Number NN140-RVR-001)

Category D - Tower Computer Control Complex (TCCC) interface

Category E - Automated Surface Observing System (ASOS) interface

Category F - Operational Evaluation of the CD

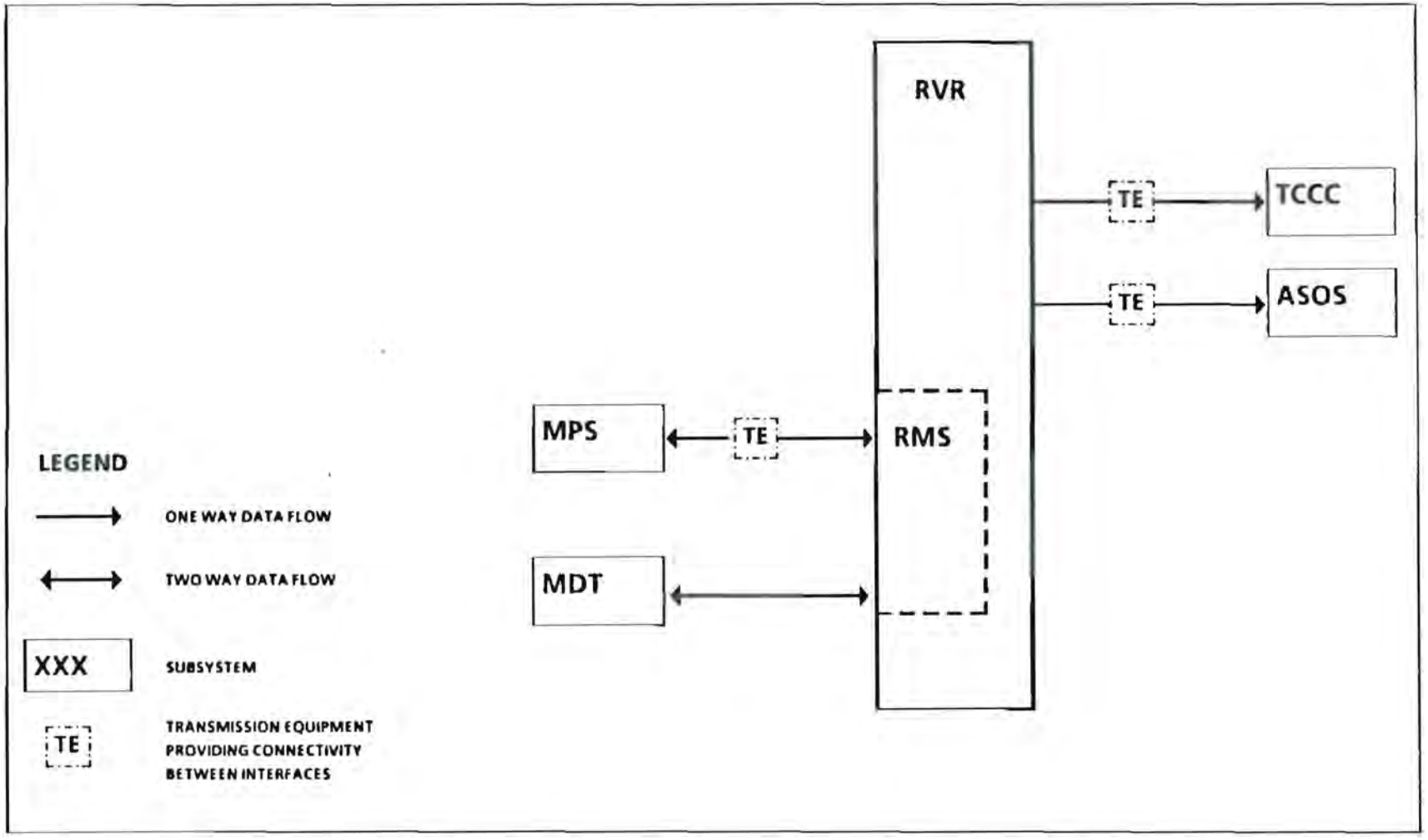

FIGURE 4-1. RVR FUNCTIONAL/PHYSICAL INTERFACES

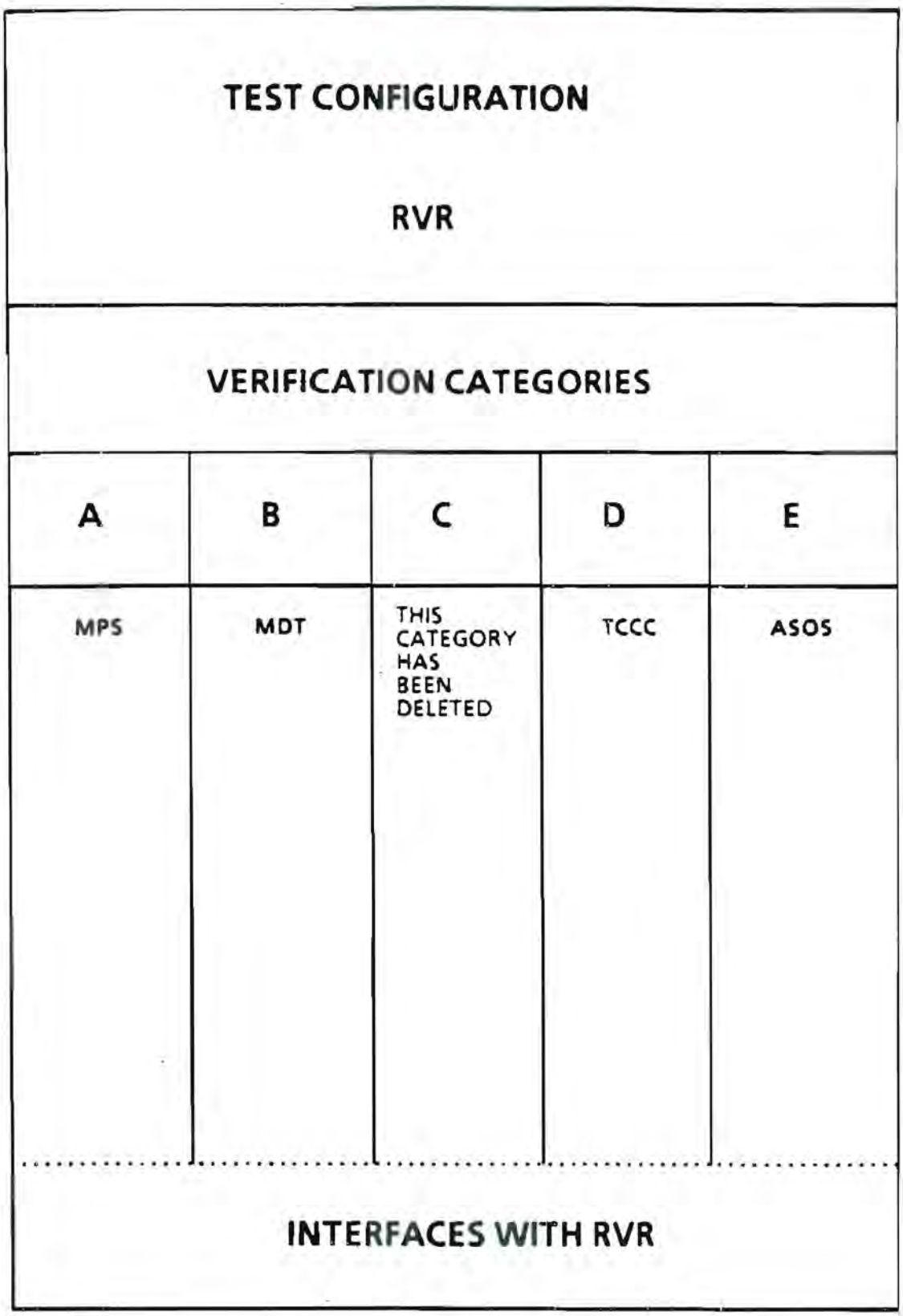

FIGURE 4.1-1. RVR OT&E/INTEGRATION TEST CONFIGURATION

4.2.1 Category A - RVR/MPS Interface.

Category A will demonstrate RVR/MPS operability by interfacing the two subsystems functionally and physically. It will verify the data exchange between the RVR and the MPS in accordance with NAS-SS-1000. The RMMS shall provide the capability to automate and remotely control (1) the periodic tasks of equipment performance monitoring; (2) the recording of site data; (3) the support of fault isolation through diagnostic testing; and (4) the operational status of remote sites. The RVR system shall employ an embedded RMS. The MPS shall control communications to all remote facilities and shall collect, record, and analyze the facility data. The MPS may direct RMSs to execute controls to bring equipment within operational performance limits.

4.2.1.1 Test Objectives.

The specific objectives of this test category are as follows:

a. To verify that the RVR supplies correct data in the proper format to the MPS upon request.

b. To verify that the RVR responds correctly to control commands initiated by the MPS.

c. To verify that the RVR will supply correct data in the proper format to the MPS upon an unplanned event or alarm condition.

4.2.1.2 Tests to be Performed.

The following subparagraphs describe the tests to be performed to verify the test requirements of the RVR/MPS interface. These tests will be further described in the RVR/MPS test procedures.

4.2.1.1.1 Link Level Interface Testing.

The purpose of the link level interface testing is to verify that the link level communications can be established from the MPS to the RVR RMS.

4.2.1.1.2 Monitoring Test.

The purpose of the monitoring test is to verify that the RVR is properly reporting its operational status to the MPS. A scheduled poll will be issued to the RVR from the MPS. The RVR shall then initiate a message transfer of all continuously monitored performance data via site data report (SDR) messages.

4.2.1.1.3 Alarm Test.

The purpose of the alarm test is to verify that the RVR is properly reporting RVR equipment alarm conditions to the MPS. Following receipt of an RVR alarm, the MPS will issue a specific poll to the RVR. The RVR shall then initiate a message transfer of all continuously monitored performance data to the MPS.

4.2.1.1.4 Command Test.

The purpose of the command test is to verify that the RVR is properly responding to commands issued at the MPS.

4.2.1.1.5 Diagnostic Test.

The purpose of the diagnostic test is to verify that the RVR is properly responding to diagnostic commands (e.g., fault isolation, performance data, etc.) issued via the MPS or MDT.

4.2.1.1.6 Certification Test.

The objective of the certification test is to confirm that the RVR RMS equipment will correctly respond to certification commands sent by the MPS (e.g., parameter values, tolerances required, etc.).

Category A testing shall verify the applicable requirements of the TVRTM listed in appendix A.

4.2.2 Test Category B - RVR/MDT Interface.

Category B will demonstrate RVR/MDT operability by interfacing the subsystems functionally and physically. It will verify the requirements related to the transmission of data exchange required from the RVR in accordance with NAS-SS-1000. The data gathered during this test will be analyzed in detail to provide a comprehensive analysis of the RVR/MDT interface. Data will be recorded at the MDT and the RVR. All requests and responses recorded will be compared to insure that the MDT can correctly send and accept data from the RVR.

4.2.2.1 Test Objectives.

To verify the capability of the RVR to recognize and perform as required to a defined operational set of MDT commands.

Category B testing shall verify the applicable requirements of the TVRTM listed in appendix A.

4.2.3 Test Category C - RVR/ECTS.

The RVR OT&E/Integration testing will not address the ECTS interface per Case File Number (NN140-RVR-001).

4.2.4 Test Category D - RVR/TCCC.

Category D will demonstrate RVR/TCCC operability by interfacing the two subsystems functionally and physically. It will verify the requirements related to the transmission of products, equipment status, RVR modes, and receipt of commands from the RVR subsystem to the TCCC, located in the Airport Traffic Control Tower (ATCT). These tests may be accomplished through simulation, as TCCCs are not yet available at this time. The tests will verify that the RVR is capable of providing the appropriate data to the TCCC.

4.2.4.1 Test Objectives.

a. To verify that the RVR Data Processing Unit (DPU) will output RVR products every 2 seconds to the collocated TCCC via a dedicated line.

b. To verify that each RVR system shall transmit product and status data in the desired protocol to the TCCC.

Category D testing shall verify the applicable requirements of the TVRTM listed in appendix A.

4.2.5 Test Category E - RVR/ASOS.

Category E will demonstrate RVR/ASOS operability by interfacing the two subsystems functionally and physically. It will verify the requirement for RVR to send RVR data to ASOS. The data will be derived from the visibility value reported by the sensor located at the touchdown zone of the designated runway. The computation of this value shall always assume a runway light intensity setting of 5.

4.2.5.1 Test Objective.

To verify that the RVR is capable of sending correct touchdown zone product(s) to the ASOS.

4.2.6 Category F - Operational Evaluation of the CD.

The Category F operational evaluation will be conducted to evaluate the operational suitability and effectiveness of the CD located at Kansas City International ATCT when it is operationally connected to the RVR. Five air traffic controllers, with previous operational RVR experience, will complete questionnaires to evaluate the CD.

4.2.6.1 Evaluation Objective.

The objective of this category is to obtain air traffic controller evaluations of the operational suitability and effectiveness of the CD in an RVR operational environment. This category represents an evaluation only and has no TVRTM requirements or pass/fail criteria. Results will be based on an overall analysis of the questionnaires.

4.3 CRITICAL REQUIREMENTS.

None identified.

4.4 VERIFICATION METHODS.

Two types of verification methods will be applied to the test categories. The methods of verification are defined as follows:

a. Test (T). Test is a method of verification wherein performance is measured during or after the controlled application of functional and/or environmental stimuli. Quantitative measurements are analyzed to determine the degree of compliance. The process uses laboratory equipment, procedures, items and/or services.

b. Demonstration (D). Demonstration is a method of verification where qualitative determination of properties is made for an end-item, including software and/or the use of technical data and documentation. The items being verified are observed, but not quantitatively measured, in a dynamic state.

5. TEST PROGRAM FLOW DIAGRAM.

Figure 5.1-1 graphically displays the flow of activities for the OT&E/Integration testing program.

6. ORGANIZATIONAL ROLES AND RESPONSIBILITIES.

6.1 RESPONSIBILITIES.

6.1.1 Weather and Remote Maintenance Monitoring Systems Branch, ACN-250.

a. ACN-250 is responsible to direct and conduct OT&E/Integration testing.

b. Provides the test director and other test personnel.

c. Provides a recommendation based on initial test results in support of the Executive Committee (EXCOM) Deployment Readiness Review (DRR) process.

6.2 ROLES.

6.2.1 Test Director.

The test director is responsible for the overall management of the RVR OT&E/Integration test effort and will provide test management guidance to members of the test team. The test director will maintain the ultimate authority over the specific test assigned. The test director will be responsible for ensuring that test results and noted deficiencies are fully documented.

6.2.2 Test Manager.

The test manager is appointed by the test director and is responsible for upholding test schedules and maintaining authority at the test site during test conduct. Duties include the following activities:

a. Test personnel are available and properly trained to conduct the required test;

b. Required equipment is available and in working order at the operational test sites;

c. Requirements for on-site test support personnel are coordinated;

d. Test activities are performed in accordance with approved test plans and procedures, and that test objectives are successfully fulfilled;

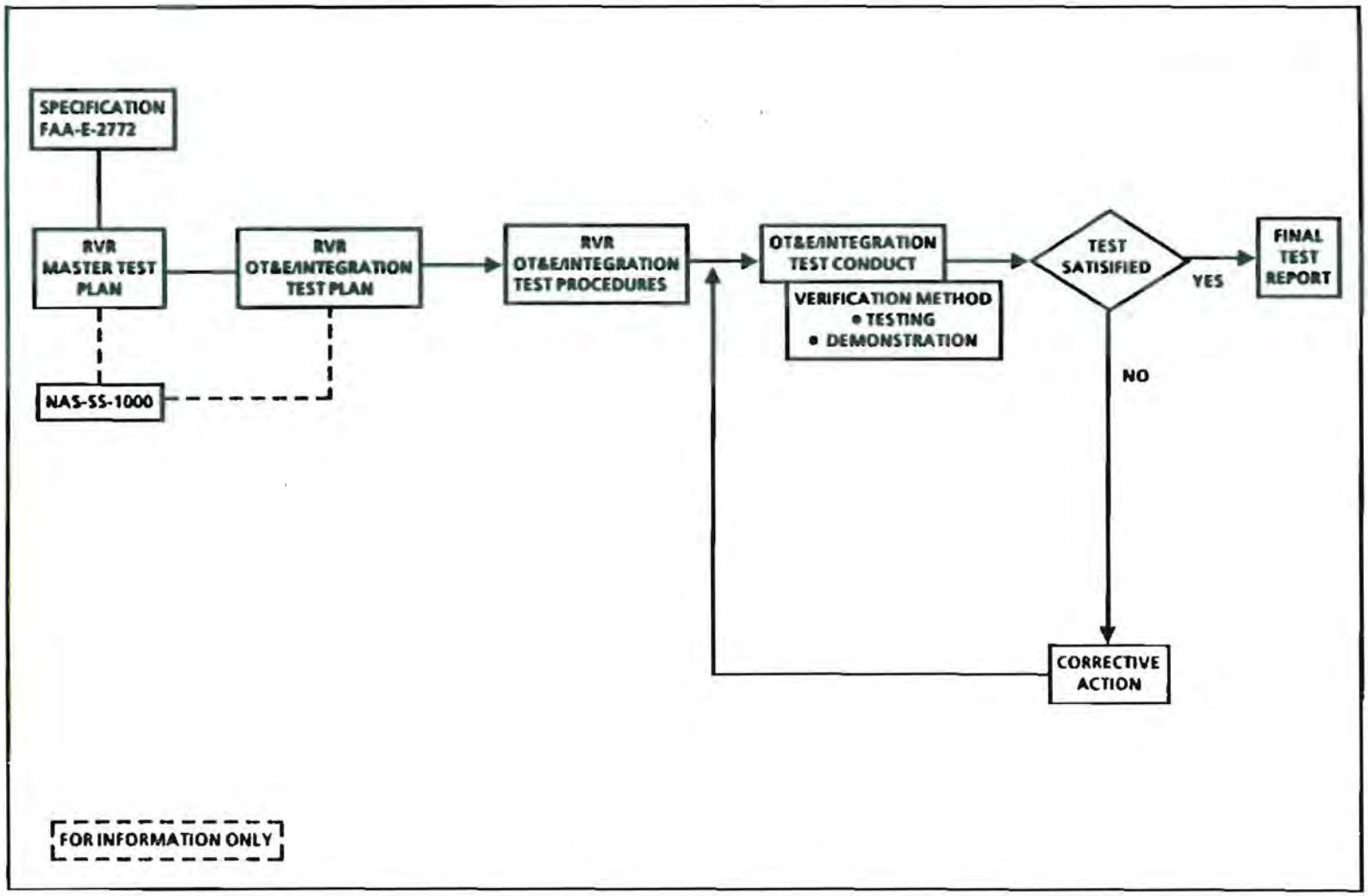

FIGURE 5.1-1. RVR OT&E/INTEGRATION TEST PROGRAM FLOW DIAGRAM

e. Noted test discrepancies are logged and appropriate remedial action for resolution of test problems is recommended;

f. Test logs/observer records are being documented properly;

g. Test data for analysis are collected and test results are documented.

6.2.3 Test Observers/Monitors.

a. Technically qualified test observers/monitors to include field facility personnel will be assigned to monitor and record activities for specific RVR OT&E/Integration test activities. Test observers will also maintain test observer notes as well as other assigned data sheets.

6.3 SUPPORT CONTRACTORS.

The UAL Corporation personnel will assist in the development of OT&E/Integration test plans and procedures and serve as test observers/monitors as required. The Systems Engineering and Integration Contractor (SEIC) will provide support in the development and maintenance of the test activities schedules.

7. DOCUMENT REQUIREMENTS AND CONTROL.

This section describes the required documents for planning, conducting, and reporting the RVR OT&E/Integration testing activities.

7.1 DOCUMENTATION TREE.

The RVR documentation hierarchy tree, figure 7.1-1, illustrates the verification documentation.

7.2 OPERATING AND CONTROL DOCUMENTS.

7.2.1 OT&E/Integration Test Plan.

This plan establishes the specific verification categories, issues, objectives, schedules, resource requirements, test methodology, and test management organization.

7.2.2 Test Procedures.

Test procedures, containing the step-by-step testing instructions, and required inputs, outputs, and expected results will be provided by ACN-250 and will address requirements as specified in appendix A of the TVRTM.

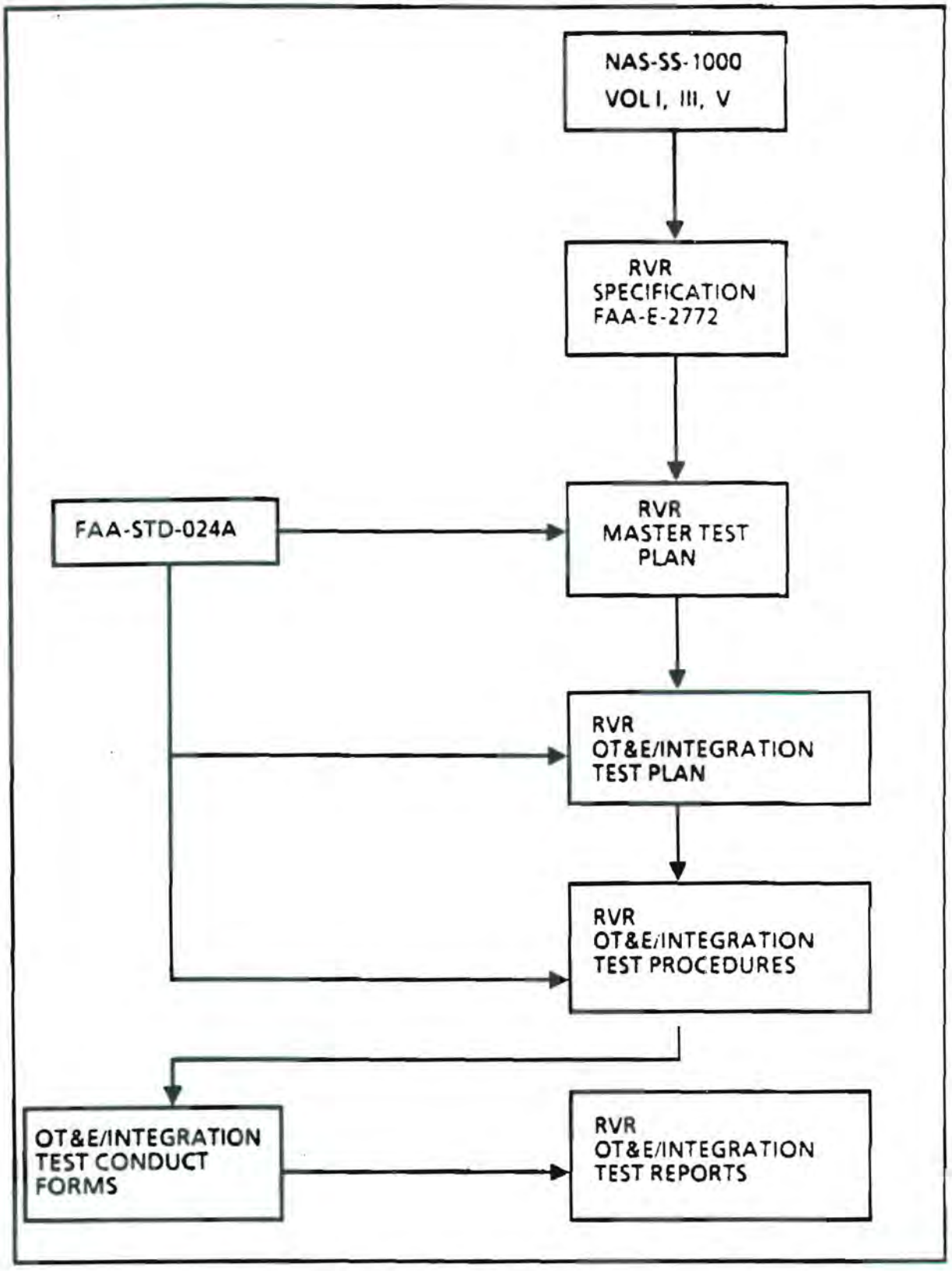

FIGURE 7.1-1. RVR VERIFICATION DOCUMENTATION TREE

7.2.3 Test Conduct Log.

Test Conduct Logs will be prepared for each testing category. The test manager will be responsible for completion of this form. (See figure 7.2.3-1.)

7.2.4 Test Observer/Monitor Record.

Test Observer/Monitor Records will be used by the FAA to record relevant events, test results for each requirement, and to provide for an initial test assessment. The records will be completed by a designated FAA test observer and signed by the test director. (See figure 7.2.4-1.)

7.2.5 Test Discrepancy Reports.

The test manager will ensure that all discrepancies observed during the tests are documented. The following forms, located in appendix B, will be used to document all test discrepancies.

a. Software Discrepancy Report - This form is initiated when any discrepancies or anomalies are RVR subsystem software related.

b. Hardware Discrepancy Report - This form is initiated when a problem is RVR subsystem hardware related.

c. Program Technical Report - This form is initiated when a problem is related to a non-RVR subsystem/equipment maintenance-type discrepancy. FAA-OR-1100.14B, Program Technical Report Procedures, delineates the purpose of this form.

8. TRAINING.

Training will be provided to ACN-250 test personnel prior to OT&E/Integration testing.

9. TEST SUPPORT.

The following are the necessary requirements for test support.

9.1 INSTRUMENTATION.

RVR OT&E/Integration testing will require the following instrumentation:

a. 1 LM10E protocol analyzer (version 7.0 or equivalent);
b. 1 portable printer;
c. 1 ACD-350 synchronous MPS communications simulator;
d. 2 telephones and voice telephone lines RVR to MPS;
e. 1 dedicated telephone line RVR to MPS;
f. Telephones or radio communicators (as required) RVR equipment to RVR RMS;
g. 3 stopwatches;
h. 1 digilog protocol analyzer.

SITE: _____

DEVICE/POSITION: _____ PAGE _____ of _____

TEST: _____ DATE: _____/_____/____

TIME: _____

PROCEDURE STEP/ PAGE _____

ACTION OUTPUT PRODUCED _____

_____

_____

_____

_____

_____

_____

OBSERVATIONS NOTED _____

_____

_____

_____

_____

_____

_____

_____

TEST MANAGER _____

FIGURE 7.2.3-1. TEST CONDUCT LOG

SITE: _____

DEVICE/POSITION _____ PAGE___OF___

TEST: CATEGORY _____ DATE___/___/___

TIME	PROCEDURES		RESOLUTION	PASS	FAIL
	PAGE/ PARA	OBSERVED/MONITORED			

N/A = NOT APPLICABLE TEST OBSERVER/MONITOR _____
(SIGNATURE)

FIGURE 7.2.4-1. TEST OBSERVER/MONITOR RECORD

9.2 DATA ANALYSIS.

The criteria for success will be determined by utilizing the identified method for each category requirement as specified in appendix A. The required data will be gathered by designated test team members from test logs, printer outputs, video displays, and/or storage devices (e.g., disk drives, tape drives). Data analysis shall be conducted using the following guidelines:

a. The system's output will be analyzed against the expected results to determine if appropriate responses were generated. When appropriate responses are generated, the requirement is considered as passed.

b. When appropriate responses are not generated, the requirement is not met and the test is considered as failed. The Test Observer/Monitor Record form will be marked to indicate the results at this time. For failed tests, the FAA will schedule retesting. Anomalies found during testing will be appropriately documented. If necessary, Program Trouble Reports will be initiated.

9.3 TEST SITE CONFIGURATION.

The contractor will install the RVR system at each of the designated sites. The OT&E/Integration test location will be at Kansas City, MO, Airport (MCI). The test site configuration will be identical to the Reliability Development Growth Test (RDGT) except displays will be relocated one each to the Terminal Radar Approach Control (TRACON) and the ATCT cab. The region Facilities and Equipment (F&E) electronics personnel will make the appropriate cables.

10. REVIEWS AND REPORTS.

The following subsections identify the reviews, meetings, and reports that will be conducted and/or completed prior to, during, and after the RVR OT&E/Integration test.

10.1 TEST READINESS REVIEW (TRR).

Prior to the start of the RVR OT&E/Integration test activities, a Test Readiness Review (TRR) shall be conducted and an overall assessment of the availability and completeness of the previous testing activities/results will be discussed.

In this review, the test director will present justification for assessment of the readiness of the test including, but not limited to, status of all necessary documentation, the resolution of comments/questions/problems, completion of configuration audits (software and hardware), availability of the RVR system, and other system facilities and resources.

10.2 TEST SCHEDULE STATUS REVIEW (TSSR) MEETINGS.

Test Schedule Status Review meetings are scheduled on a monthly basis to track the status of testing activities and keep ANN-140 advised of any outstanding issues/actions. These reviews are chaired by the ACN-250 Test Director, or a designee, in accordance with FAA Order 1810.4A.

10.3 POST-TEST REVIEW.

This review will be held at the test site, upon test completion, by the RVR OT&E/Integration test team. It will be chaired by the test manager and attended by all test personnel. This meeting will review the results of the test activity. Any discrepancies, anomalies, and exceptions which were recorded during the test will be discussed during this review.

10.4 DRR.

A DRR will be scheduled and conducted in accordance with the FAA Test and Evaluation (T&E) process. Upon completion of the RVR OT&E/Integration test, ACN-250 will provide recommendations to the DRR EXCOM.

10.5 QUICK LOOK REPORTS.

These reports will be completed by the test manager following the analysis of the test data. A Quick Look Test Report will be produced upon completion of OT&E/Integration testing. This report will give the early status information for the system while the analysis process is still underway. The Quick Look Report will be completed 15 working days from the completion of RVR OT&E/Integration testing.

10.6 FINAL TEST REPORT.

The RVR test director will be responsible for preparing a Final Test Report. A draft report will be delivered to the program manager after the completion of testing. The Final Test Report will document the results of the detailed test analysis and assess the conformance to each test to defined criteria. The status of problems identified previously in the Quick Look Test Reports will be reviewed. An assessment will be made on the tested system and any suggested corrective actions will be recommended. The Final Test Report will be completed 30 working days from the completion of the RVR OT&E/Integration testing.

11. SCHEDULES.

This test plan includes schedules for RVR OT&E/Integration test activities and post-test activities. (See appendix C.)

12. TVRTM.

The TVRTM reflects all of the OT&E/Integration requirements and serves as the single tracking tool accounting for their evaluation/assessment throughout the OT&E/Integration cycle.

The TVRTM will be maintained, as required by ACN-250, until OT&E/Integration test activities are completed.

12.1 COLUMN DEFINITIONS AND UTILIZATION.

The following TVRTM column definitions are provided for better user understanding:

NAS-SS-1000 paragraph number

NAS-SS-1000 REQUIREMENT STATEMENT - RVR OT&E/Integration requirement statements per NAS-SS-1000, Volumes I, III, and V.

VERF METHOD - Verification Method. Denoted by:

"T" for Test
"D" for Demonstration
"Q" for Deferred Qualification Requirement (the interface does not presently exist)

VOL - Lists the NAS-SS-1000 volume where the requirement can be traced.

TEST PLAN CROSS REF CAT -

Category A RVR/MPS
Category B RVR/MDT
Category D RVR/TCCC
Category E RVR/ASOS

TEST PLAN CROSS REF RLTD SECTS - The Related Sections column contains the section numbers where the requirement can be traced to the RVR OT&E/Integration Test Plan.

TRACE PARAGRAPH - SPECIFICATION - Paragraph in Specification relating to requirement in NAS-SS-1000.

C or NC - Indicates a Critical (C) or Non Critical (NC) requirement.

13. ABBREVIATIONS AND ACRONYMS.

ASOS	Automated Surface Observing System
ATCT	Airport Traffic Control Tower
CD	Controller Display
DPU	Data Processing Unit
DRR	Deployment Readiness Review
ECTS	External Coded Time Source
EXCOM	Executive Committee
FAA	Federal Aviation Administration
FAT	Factory Acceptance Test
FCA	Functional Configuration Audit
F&E	Facilities and Equipment
IRD	Interface Requirements Document
MCI	Kansas City Missouri Airport
MDT	Maintenance Data Terminal
MPS	Maintenance Processing System
MTP	Master Test Plan
NAS	National Airspace System
NCP	NAS Change Proposal
ORD	Operational Readiness Demonstration
OT&E	Operational Test and Evaluation
PCA	Physical Configuration Audit
RDGT	Reliability Development Growth Test
RMMS	Remote Maintenance Monitoring System
RMS	Remote Monitoring Subsystem
RMSC	Remote Monitoring Subsystem Concentrator
RVR	Runway Visual Range

SAT	Site Acceptance Test
SEIC	System Engineering Integration Contractor
SDR	Site Data Report
TCCC	Tower Control Computer Complex
T&E	Test and Evaluation
TRACON	Terminal Radar Approach Control
TRR	Test Readiness Review
TSC	Transportation Systems Center
TSSR	Test Schedule Status Review
TVRTM	Test Verification Requirements Traceability Matrix
VRTM	Verification Requirements Traceability Matrix

APPENDIX A

RUNWAY VISUAL RANGE (RVR)

TEST VERIFICATION REQUIREMENTS TRACEABILITY MATRIX (TVRTM)

Notes:

1. ANN-100 has submitted an NAS Change Proposal (NCP) to delete External Coded Time Source (ECTS) requirement applicable to the Runway Visual Range (RVR) subsystem.

2. The Remote Monitoring Subsystem Concentrator (RMSC) will not be tested using RVR; it is transparent to the RVR-Maintenance Processing System (MPS) interface.

3. RVR system accuracy requirements will be verified by Transportation Systems Center (TSC) following data collection and analysis performed on old and new generation RVR systems at three airports.

NAS-SS-1000 PARA NUMBER	NAS-SS-1000 REQUIREMENT	VERF MTHD	VOL	TEST PLAN CROSS REF CAT	TEST PLAN CROSS REF PLAN RLTD SECTS	TRACE PARAGRAPH SPECIFICATION FAA-E-2772	C OR NC	REMARKS
3.2.1.4.10.3	RVR Functional/	D		A	4.2.1			Lead-in
	Physical Characteristic	D	III	B	4.2.2	1-1.2	NC	
3.2.1.4.10.3-1	RVR Interface	D		A	4.2.1			Lead-in
	Characteristics	D	III	B	4.2.2	1-3.2.2	NC	
3.2.1.4.10.3-1A	RVR to ASOS	Q	III	E	4.2.5	3.2.2.1.1	NC	See Note 3
3.2.1.4.10.3-1B	MDT to RVR	D	III	B	4.2.2	1-3.5.4.3.2.13	NC	
3.2.1.4.10.3-1C	RVR to MDT	D	III	B	4.2.2	1-3.5.4.3.2.13	NC	
3.2.1.4.10.3-1D	MPS to RVR	D	III	A	4.2.1	1-3.5.4.3.2.1	NC	

NAS-SS-1000 PARA NUMBER	NAS-SS-1000 REQUIREMENT	VERF MTHD	VOL	TEST PLAN CROSS REF CAT	TEST PLAN CROSS REF PLAN RLTD SECTS	TRACE PARAGRAPH SPECIFICATION FAA-E-2772	C OR NC	REMARKS
3.2.1.4.10.3-1E	RVR to MPS	D	III	A	4.2.1	1-3.5.4.3.2.1	NC	
3.2.1.4.10.3-1F	RMSC to RVR	D	III	A	4.2.1	1-3.5.4.3.2	NC	See Note 2
3.2.1.4.10.3-1G	RVR to RMSC	D	III	A	4.2.1	1-3.5.4.3.2	NC	See Note 2
3.2.1.4.10.3-1.J	RVR to TCCC	Q	III	D	4.2.4	6-2.4	NC	
30.1.1.1	Monitoring Designated Subsystem Performance Parameters	D	I	A	4.2.1	1-3.5.4.3.2.6	NC	Appendix III
30.1.1.13	Report Disabling of a Subsystem Alarm/ Alert as Performance Data	D	I	A	4.2.1	1-3.5.4.3.2.8	NC	Appendix III
30.1.1.14	Provide Subsystem Certification	D	I	A	4.2.1	1-3.5.4.3.2.7	NC	Appendix III
30.1.1.15	Provide Subsystem Diagnostic Data	D	I	A	4.2.1	1-3.5.4.3.2.7	NC	Appendix III
30.1.1.2	Provide Subsystem Operating Status Data Including Configuration and Mode of Operation	D	I	A	4.2.1	1-3.5.4.3.2.7	NC	Appendix III

NAS-SS-1000 PARA NUMBER	NAS-SS-1000 REQUIREMENT	VERF MTHD	VOL	TEST PLAN CROSS REF CAT	TEST PLAN CROSS REF PLAN RLTD SECTS	TRACE PARAGRAPH SPECIFICATION FAA-E-2772	C OR NC	REMARKS
30.1.1.3	Provide Subsystem Status Reports that contain State Changes and Alarm/Alerts	D	I	A	4.2.1	1-3.4.5.3.2.8	NC	Appendix III
30.1.1.4	Provide Accumulation of Current Subsystem Status and Performance Data	D	I	A	4.2.1	1-3.4.5.3.2.7	NC	Appendix III
30.1.1.5	Provide Subsystem Data in Response to Requests from RMMS Subsystems	D	I	A	4.2.1	1-3.4.5.3.2.7	NC	Appendix III
30.1.1.6	Provide Out of Tolerance Alarms	D D	 I	A B	4.2.1 4.2.2	1-3.4.5.3.2.8	NC	Appendix III
30.1.1.9	Provide Return to Normal Alarms	D	I	A	4.2.1	1-3.4.5.3.2.8	NC	Appendix III
30.1.1.10	Provide an Alert when selected subsystem parameters are outside a predetermined range	D	I	A	4.2.1	1-3.4.5.3.2.7	NC	Appendix III

NAS-SS-1000 PARA NUMBER	NAS-SS-1000 REQUIREMENT	VERF MTHD	VOL	TEST PLAN CROSS REF CAT	TEST PLAN CROSS REF PLAN RLTD SECTS	TRACE PARAGRAPH SPECIFICATION FAA-E-2772	C OR NC	REMARKS
30.1.1.11	Capability to Set or Change Alarm/Alert Ranges	D	I	A	4.2.1	1-3.4.5.3.2.8	NC	Appendix III
30.1.1.12	Capability to Disable Alarm/Alerts by On-Site Specialist	D D	I	A B	4.2.1 4.2.2	1-3.4.5.3.2.7	NC	Appendix III
3.2.1.4.10.1.3	Data Processing	D	III	B	4.2.2	1-3.5.4.3.2.1	NC	
3.2.1.4.10.1.6	Maintenance Data	D	III	B	4.2.2	1-3.5.4.3.2.1	NC	
3.2.1.4.10.1.7	Maintenance Commands	D	III	B	4.2.2	1-3.5.4.3.2.1	NC	
3.2.1.4.10.1.9	Standard Time Source	D	III	A	4.2.1	3-2.2.1.5	NC	
30.1.1.18	Provide for the Control to Change the Current Operating Mode of a Subsystem to any Other Proper Operating Mode Including On/Off	D D	I	A B	4.2.1 4.2.2	1-3.2.2.2.1	NC	Appendix III

NAS-SS-1000 PARA NUMBER	NAS-SS-1000 REQUIREMENT	VERF MTHD	VOL	TEST PLAN CROSS REF CAT	TEST PLAN CROSS REF PLAN RLTD SECTS	TRACE PARAGRAPH SPECIFICATION FAA-E-2772	C OR NC	REMARKS
30.1.1.19	Provide the Capability to Adjust Selected Subsystem Parameters	D D	 I	A B	4.2.1 4.2.2	1-3.5.4.3.2.6	NC	Appendix III
30.1.1.20	Provide the Capability to Reset a Subsystem	D	I	A	4.2.1	1-3.5.4.3.2.7	NC	Appendix III
30.1.1.21	Provide for the Initiation of Subsystem Diagnostic Tests	D	I	A	4.2.1	1-3.5.4.3.2.12	NC	Appendix III
30.1.1.22	Provide for the Initiation of Subsystem Certification Exercises	D	I	A	4.2.1	1-3.5.4.3.2.12	NC	Appendix III
30.1.1.24	Provide for Specialist Access to the RMMS Network	D	I	B	4.2.2	1-3.5.4.3.2.14	NC	Appendix III
30.1.1.25	Provide the Capability for Local Input and Display of Data via Maintenance Terminal	D	I	B	4.2.2	1-3.5.4.3.2.12	NC	Appendix III

NAS-SS-1000 PARA NUMBER	NAS-SS-1000 REQUIREMENT	VERF MTHD	VOL	TEST PLAN CROSS REF CAT	TEST PLAN CROSS REF PLAN RLTD SECTS	TRACE PARAGRAPH SPECIFICATION FAA-E-2772	C OR NC	REMARKS
30.1.1.26	Provide the Specialist the Capability to Obtain Exclusive Control of a Subsystem	D	I	B	4.2.2	1-3.5.4.3.2.12	NC	Appendix III
3.2.1.1.6.1.J	Runway Visual Range Data	D	I	E	4.2.5	3-4.3	NC	
3.2.1.1.4.1.1 3.2.1.1.4.1.2	Provide for the monitoring of designated subsystems performance parameters.	D	V	A	4.2.1	1-3.5.4.3.2.6	NC	
3.2.1.1.4.1.5	Provide subsystem operating status data including configuration and mode of operation.	D	V	A	4.2.1	1-3.5.4.3.2.6	NC	
3.2.1.1.4.1.6	Provide subsystem status reports that contain only state changes and alarms/alerts in response to a subsystem status request.	D	V	A	4.2.1	1-3.5.4.3.2.7	NC	
3.2.1.1.4.1.3	Automatically provide for the accumulation of current subsystem status and performance data in a local data file.	D	V	A	4.2.1	1-3.5.4.3.2.6	NC	

NAS-SS-1000 PARA NUMBER	NAS-SS-1000 REQUIREMENT	VERF MTHD	VOL	TEST PLAN CROSS REF CAT	TEST PLAN CROSS REF PLAN RLTD SECTS	TRACE PARAGRAPH SPECIFICATION FAA-E-2772	C OR NC	REMARKS
3.2.1.1.4.1.4	Provide subsystem data in response to requests from RMMS subsystems.	D	V	A	4.2.1	1-3.5.4.3.2.6	NC	
3.2.1.1.4.1.7	Provide an alarm when any designated NAS subsystem monitored parameter is out of tolerance.	D	V	A B	4.2.1 4.2.2	1-3.5.4.3.2.4	NC	
3.2.1.1.4.1.9	Provide a return-to-normal alarm when an initial alarm condition is cleared.	D	V	A	4.2.1	1-3.5.4.3.2.8	NC	
3.2.1.1.4.1.10	Provide an alert when selected subsystem parameters are outside a predetermined range.	D	V	A	4.2.1	1-3.5.4.3.2.4	NC	
3.2.1.1.4.1.11	Provide the capability to set or change ranges for subsystem alarm or alert parameters.	D	V	A	4.2.1	1-3.5.4.3.2.8	NC	
3.2.1.1.4.1.12	Provide for the disabling of a subsystem alarm or alert by a specialist on-site.	D	V	A B	4.2.1 4.2.2	1-3.5.4.3.2.14	NC	

NAS-SS-1000 PARA NUMBER	NAS-SS-1000 REQUIREMENT	VERF MTHD	VOL	TEST PLAN CROSS REF CAT	TEST PLAN CROSS REF PLAN RLTD SECTS	TRACE PARAGRAPH SPECIFICATION FAA-E-2772	C OR NC	REMARKS
3.2.1.1.4.1.13	Report the disabling of a subsystem alarm or alert as performance data.	D	V	A	4.2.1	1-3.5.4.3.2.8	NC	
3.2.1.1.4.1.14	Provide subsystem certification data in response to a certification exercise.	D	V	A	4.2.1	1-3.5.4.3.2.6	NC	
3.2.1.1.4.1.15	Provide subsystem diagnostic data in response to a diagnostic test.	D	V	A	4.2.1	1-3.5.4.3.2.6	NC	
3.2.1.1.4.1.18	Provide for the control to change the current operating mode of a subsystem to any other proper operating of a subsystem including on/off.	D	V	A B	4.2.1 4.2.2	1-3.2.2.2.1	NC	
3.2.1.1.4.1.19	Provide the capability to adjust selected subsystem parameters.	D	V	A B	4.2.1 4.2.2	1-3.5.4.3.2.6	NC	
3.2.1.1.4.1.20	Provide the capability to reset a subsystem.	D	V	A B	4.2.1 4.2.2	1-3.5.4.3.2.7	NC	

NAS-SS-1000 PARA NUMBER	NAS-SS-1000 REQUIREMENT	VERF MTHD	VOL	TEST PLAN CROSS REF CAT	TEST PLAN CROSS REF PLAN RLTD SECTS	TRACE PARAGRAPH SPECIFICATION FAA-E-2772	C OR NC	REMARKS
3.2.1.1.4.1.21	Provide for the initiation of subsystem diagnostic tests for the purpose of fault isolation.	D	V	A	4.2.1	1-3.5.4.3.2.15 1-3.5.4.3.2.7	NC	
3.2.1.1.4.1.31	Provide for the initiation of subsystem certification exercises.	D	V	A	4.2.1	1-3.5.4.3.2.12	NC	
3.2.1.1.4.1.24	Provide for specialist access to the RMMS network through a maintenance data terminal with proper authorization.	D	V	B	4.2.2	1-3.5.4.3.2.14 1-3.5.4.3.2.18	NC	
3.2.1.1.4.1.25	Provide the capability for local input and display of data, and commands to a subsystem via the maintenance data terminal.	D	V	B	4.2.2	1-3.5.4.3.2.15	NC	
3.2.1.1.4.1.26	Provide the specialist the capability to obtain exclusive use of a subsystem while on-site.	D	V	B	4.2.2	1-3.5.4.3.2.18	NC	

NAS-SS-1000 PARA NUMBER	NAS-SS-1000 REQUIREMENT	VERF MTHD	VOL	TEST PLAN CROSS REF CAT	TEST PLAN CROSS REF PLAN RLTD SECTS	TRACE PARAGRAPH SPECIFICATION FAA-E-2772	C OR NC	REMARKS
3.2.1.1.4.1.29	Provide an I/O port for a portable maintenance data terminal.	D	V	B	4.2.2	1-3.5.4.3.2.13	NC	
3.2.1.1.4.1.30	Provide for the transfer of specialist messages between a MDT and a RMSC/ MPS.	D	V	B	4.2.2	1-3.5.4.3.2.12	NC	
3.2.1.1.4.2.4	Execute control commands and provide an indication to the MPS within an average time of 2 seconds and a maximum time of 5 seconds.	T	V	A	4.2.1	1-3.5.4.3.2.1	NC	
3.2.1.1.4.2.5	Acknowledge receipt of a command to the MPS within an average time of 2 seconds and a maximum time of 5 seconds.	T	V	A	4.2.1	1-3.5.4.3.2.6	NC	

NAS-SS-1000 PARA NUMBER	NAS-SS-1000 REQUIREMENT	VERF MTHD	VOL	TEST PLAN CROSS REF CAT	TEST PLAN CROSS REF PLAN RLTD SECTS	TRACE PARAGRAPH SPECIFICATION FAA-E-2772	C OR NC	REMARKS
3.2.1.1.4.2.8	Transfer messages to the MPS on a priority basis, with priority being status messages, message data, and performance data.	D	V	A	4.2.1	1-3.5.4.3.2.9	NC	
3.2.1.1.2.2.4	Alarm detection and presentation	D	V	A B	4.2.1 4.2.2	1-3.5.4.3.2.9	NC	
3.2.1.1.2.2.6	Control Commands	D	V	A B	4.2.1 4.2.2	1-3.5.4.3.2.9	NC	
3.2.1.1.4.2.1	Alarm/Alert Detection	D	V	B	4.2.2	1-3.5.4.3.2.9	NC	

APPENDIX B

TEST DISCREPANCY REPORTS

PLEASE TYPE	SOFTWARE DISCREPANCY REPORT	☐ DUPLICATE SDR EXISTS

TYPE OF REPORT	☐ TROUBLE ☐ IMPROVEMENT	SITE:

SUSPECTED SUBPROGRAM								SECTION

MODEL	VERSION	SYSTEM TAPE ID								PRIORITY

REFERENCE(S)	ATTACHMENT(S)

DESCRIPTION OF PROBLEM

ACTION TAKEN

ORIGINATOR'S SIGNATURE AND ROUTING SYMBOL

PLEASE TYPE	HARDWARE DISCREPANCY REPORT	☐ DUPLICATE HDR EXISTS

SITE:		LEESBURG		SALT LAKE CITY
		ATLANTA		OTHER

HARDWARE SUBSYSTEM	HARDWARE TYPE	HARDWARE MODEL	SYSTEM TAPE ID								PRIORITY

REFERENCE(S)	ATTACHMENT(S)

DESCRIPTION OF PROBLEM

ACTION TAKEN

ORIGINATOR'S SIGNATURE AND ROUTING SYMBOL

PLEASE TYPE	PROGRAM TECHNICAL REPORT	☐ DUPLICATE PTR EXISTS

TYPE OF REPORT	☐ TROUBLE ☐ IMPROVEMENT	SITE	— LEESBURG — ATLANTA	— SALT LAKE CITY

SUSPECTED SUBPROGRAM								SECTION

MODEL	VERSION	SYSTEM TAPE ID								PRIORITY

REFERENCE(S)	ATTACHMENT(S)

DESCRIPTION OF PROBLEM

ACTION TAKEN

ORIGINATOR'S SIGNATURE AND ROUTING SYMBOL

APPENDIX C

TEST SCHEDULE

Test Milestone	Completion Date
Design Qualification Test Procedures Approved	Aug. 10, 90
Design Qualification Testing Starts	Aug. 20, 90
Design Qualification Tests Completed	Oct. 19, 90
Functional Configuration Audit (FCA) Completed	Oct. 22, 90
Physical Configuration Audit (PCA) Completed	Oct. 22, 90
Production and Factory Checkout of First System	Nov. 01, 90
System Delivered to First Reliability Demo. Site (Chicago)	Nov. 16, 90
Reliability Testing Begins (15 Sites)	Nov. 30, 90
Integration Test Plan Approved	Feb. 15, 91
Site Acceptance Test Plan Approved	Mar. 15, 91
Shakedown Test and Evaluation Plan Approved	Mar. 29, 91
System Delivered to FAA Academy	Apr. 23, 91
Reliability Testing Complete	Apr. 30, 91
Site Acceptance and Integration Testing Begins	May 10, 91
Site Acceptance and Integration Testing Complete	May 24, 91
Shakedown Test and Evaluation Begins	May 28, 91
Shakedown Test and Evaluation Complete	June 14, 91
DRR Executive Committee (EXCOM) Deployment Decision	July 08, 91
First Operational Readiness Demonstration (ORD) Completed	July 22, 91
First Production System Delivered to Depot	Aug. 30, 91
Last ORD Completed	Oct. 31, 94

Note: Dates are subject to change.