Andy Colon, ACT-330
Library

FAA WJH Technical Center
00020625

High Capacity Voice Recorder (HCVR) Operational Test and Evaluation (OT&E)/Integration Test Plan

COPY — 2

Wayne E. Bell
Andy Colon
Edward Lind

FEDERAL AVIATION ADMINISTRATION
MAY 20 1992

February 1992

DOT/FAA/CT-TN91/55

Document is on file at the Technical Center Library, Atlantic City International Airport, N.J. 08405

U.S. Department of Transportation
Federal Aviation Administration

Technical Center
Atlantic City International Airport, N.J. 08405

technical note technical note

DOT/FAA
CT-TN
91/55
C. 2

DOT/FAA CT-TN 91/55, Bell, Wayne E., High capacity voice recorder (HCVR) operational test and evaluation (OT&E) integration test plan, C. 2, ACT Library, 00020625

NOTICE

This document is disseminated under the sponsorship of the U.S. Department of Transportation in the interest of information exchange. The United States Government assumes no liability for the contents or use thereof.

The United States Government does not endorse products or manufacturers. Trade or manufacturers' names appear herein solely because they are considered essential to the objective of this report.

Technical Report Documentation Page

1. Report No.	2. Government Accession No.	3. Recipient's Catalog No.
DOT/FAA/CT-TN91/55		

4. Title and Subtitle	5. Report Date
HIGH CAPACITY VOICE RECORDER (HCVR) OPERATIONAL TEST AND EVALUATION (OT&E)/INTEGRATION TEST PLAN	February 1992
	6. Performing Organization Code
7. Author(s) Wayne E. Bell, Andy Colon, Edward Lind	8. Performing Organization Report No. DOT/FAA/CT-TN91/55
9. Performing Organization Name and Address Federal Aviation Administration Technical Center Atlantic City International Airport, NJ 08405	10. Work Unit No. (TRAIS)
	11. Contract or Grant No.
12. Sponsoring Agency Name and Address U.S. Department of Transportation Federal Aviation Administration Technical Center Atlantic City International Airport, NJ 08405	13. Type of Report and Period Covered
	14. Sponsoring Agency Code

15. Supplementary Notes

16. Abstract

This plan addresses the Operational Test and Evaluation (OT&E)/Integration testing of the High Capacity Voice Recorder (HCVR) equipment in the current NAS environment. The approach and concept is to conduct integration tests with appropriate National Airspace System (NAS) subsystems to verify that NAS requirements and HCVR Purchase Description (PD) requirements have been satisfied. This will be accomplished by conducting unit level tests at the Federal Aviation Administration (FAA) Technical Center and extensive integration tests at Seattle Air Route Traffic Control Center (ARTCC).

17. Key Words	18. Distribution Statement
Multichannel Voice Recorder Equipment ATC communications Reproducer Unit	Document is on file at the Technical Center Library, Atlantic City International Airport, NJ 08405

19. Security Classif. (of this report)	20. Security Classif. (of this page)	21. No. of Pages	22. Price
Unclassified	Unclassified	57	

Form DOT F 1700.7 (8-72) Reproduction of completed page authorized

TABLE OF CONTENTS

		Page
1.	INTRODUCTION	1
	1.1 Purpose	1
	1.2 Background	1
	1.3 System Description	1
	1.4 Authority To Change The OT&E/Integration Test Plan	2
2.	REFERENCE DOCUMENTS	2
3.	TEST PLAN PHILOSOPHY	2
	3.1 Organizational Roles and Responsibilities	3
4.	APPROACH	3
5.	NAS SYSTEM INTEGRATION TESTS	3
	5.1 Key Site Tests	3
6.	HCVR EQUIPMENT INTEGRATION VERIFICATION CONTROL	4
	6.1 Verification Methods	4
	6.2 Verification Requirements Traceability Matrix	4
	6.3 Cross Reference Matrix	5
7.	TEST PROCEDURES	5
	7.1 NAS System Performance Test Procedures	5
	7.2 NAS System Integration Test Procedures	6
8.	SCHEDULE	6
9.	ACRONYMS AND ABBREVIATIONS	6

TABLE OF CONTENTS (Continued)

APPENDIXES

A - NAS-SS-1000 Volume I - Cross Reference Test Matrix

B - NAS-SS-1000 Volume IV - Cross Reference Test Matrix

C - Purchase Description - Verification Requirements Traceability Matrix

D - Test Procedures

LIST OF ILLUSTRATIONS

Figure		Page
1	Automated Test Equipment (ATE) Test Set	5

1. INTRODUCTION.

1.1 PURPOSE.

The purpose of this OT&E/Integration Plan is to state the operational and technical requirements necessary to establish the readiness of the High Capacity Voice Recorder (HCVR) system for service as a subsystem of the National Airspace System (NAS). To meet this objective, the HCVR must be tested with other operational systems which interface with the HCVR equipment. This plan is structured to provide guidance to cognizant organizations so that the HCVR testing activities will proceed in a structured and well documented manner. This plan contains the necessary tests to determine the operational capabilities of the HCVR and the ability of other NAS systems to interface with the HCVR equipment. This testing is only one part of the OT&E/Integration as described in Order 1810.4b, Test and Evaluation Program. The equipment will have successfully completed the OT&E/Integration when it performs in accordance with the requirements of the Purchase Description (PD) in its intended environment.

1.2 BACKGROUND.

The HCVR is a component of Air Route Traffic Control Center (ARTCC) air-to-ground (a-g) and ground-to-ground (g-g) communications. Procurement of Commercial Off-The-Shelf (COTS), 60-channel recording equipment will replace the existing 152-channel units and will assist in the modernization of ARTCC facilities, thereby improving the overall performance of the NAS.

1.3 SYSTEM DESCRIPTION.

The HCVR will interface with existing communications systems at ARTCCs and the New York Terminal Radar Approach Control (TRACON) to continuously record a-g and g-g voice communications and provide for automated retrieval and high-speed reproduction of any selected time and channel. Equipment delivered under the HCVR procurement consists of a dual transport recorder/reproducer system and a portable reproducer system.

1.3.1 Key Features.

The key features of each piece of equipment are provided in the following paragraphs.

1.3.1.1 Recorder/Reproducer System.

The recorder/reproducer system consists of the 60-channel dual transport recorder/reproducer, a remote status alarm unit, 20 reels of 1-inch recording tape, and two instruction books.

a. 60-Channel Dual Transport Recorder/Reproducer: The 60-channel dual transport recorder/reproducer consists of a cabinet, dual tape transports with takeup reels, dual power supplies, an audio monitor, a failure detection circuit, a time/date generator, a time/date reader, and an automatic search system.

b. Remote Status Alarm Unit: This unit displays system status and provides alarm indications in the event of equipment malfunctions.

1.3.1.2. Portable Reproducer System.

The portable reproducer system consists of the 60-channel portable reproducer, a bulk tape degausser unit, a head care kit, and two instruction books.

a. 60-Channel Portable Reproducer: The 60-channel portable reproducer consists of a portable case, a tape playback transport, an audio monitor, an automated search system, a foot control assembly, and an associated two-channel cassette deck.

b. Bulk Tape Degausser Unit: The bulk tape degausser unit consists of a single compact rack-mounted unit which will provide for a quick and automatic degaussing of tapes for subsequent reuse.

1.4 AUTHORITY TO CHANGE THE OT&E/INTEGRATION TEST PLAN.

A coordination process will be initiated by ACN-260 to solicit concurrence from appropriate FAA organizations for this plan. The ACN-260 office will maintain a record of all revisions to the plan.

2. REFERENCE DOCUMENTS.

The following documents, of the issue in effect on the date of this document, are applicable to the extent referenced in this document.

a.	Purchase Description (PD)	60-Channel Voice Recording and Playback Equipment Dated: April 25, 1991
b.	FAA-E-XXXX	High Capacity Voice Recorder Project Master Test Plan Dated: March 13, 1991
c.	NAS-SS-1000	NAS System Specification, Functional and Performance Requirements for the National Airspace System
d.	MIL-STD-461	Electromagnetic Emission and Susceptibility Requirements for the Control of Electromagnetic Interference.

3. TEST PLAN PHILOSOPHY.

The OT&E is that phase of the testing conducted to verify system-level requirements (e.g., physical, functional, procedural, and NAS interface). This plan will ensure that the following activities are accomplished:

a. Verify those requirements from NAS-SS-1000 and the PD. These requirements are shown in appendices A, B, and C, respectively,

b. Verify and document the results of each test with a success criterion that ratifies the requirements of the test plan,

c. Identify those problems encountered during OT&E,

d. Provide test reports to the appropriate FAA organizations.

3.1 ORGANIZATIONAL ROLES AND RESPONSIBILITIES.

ACN-260 is responsible for all testing on the HCVR program. Specifically, they will write the test procedures for the NAS integration portion of OT&E and will conduct all tests at the Federal Aviation Administration (FAA) Technical Center. Additional support at the FAA Technical Center will be provided by ANC-120. ASM is responsible for writing the test procedures and conducting the NAS Shakedown tests. Airway Facilities will be responsible for testing at the key sites with support from ANC, ACN, and ASM.

4. APPROACH.

The basic OT&E approach and concept is to conduct NAS integration tests with appropriate NAS systems to verify that NAS requirements have been satisfied. This will be accomplished by the following steps:

a. Conduct system level tests at the FAA Technical Center.

b. Conduct integration tests at key ARTCC test sites.

5. NAS SYSTEM INTEGRATION TESTS.

This area of testing will evaluate the suitability and effectiveness of the HCVR equipment to interface with NAS systems. Field testing will be conducted at the key test site in the Seattle, Washington, ARTCC.

5.1 KEY SITE TESTS.

Integration tests will be conducted with simulated inputs for those systems that presently interface with the HCVR equipment to minimize interference with operational systems. Tests to be conducted at the key test sites are listed and described below.

a. NAS System Performance/Integration tests
b. NAS requirement test
c. Operational requirement test
d. NAS Shakedown test.

6. HCVR EQUIPMENT INTEGRATION VERIFICATION CONTROL.

This section describes the method that will be used to ensure traceability of requirements to the verification categories and test configurations defined in this plan.

6.1 VERIFICATION METHODS.

Four types of verification methods will be used to ensure that the HCVR equipment meets performance requirements. The following methods of verification are defined below:

a. TEST: (T)- Test is defined as a method of verification wherein performance requirements are verified by measurement during or after controlled applications of functional and/or environmental stimuli. Quantitative measurements may require the use of laboratory equipment, recorded data, procedures, items, and services.

b. DEMONSTRATION: (D)- Demonstration is defined as a method for verification denoting the qualitative determination of properties of an end-item including software and/or the use of technical data and documentation. The items being observed are visually demonstrated, but not qualitatively measured, in a dynamic state.

c. ANALYSIS: (A)- Analysis consists of comparing hardware or software design with known scientific principles, procedures, and practices in order to estimate the capability of the proposed design to meet specific requirements. Analysis is used when a requirement is not directly testable, when results from multiple tests are required to verify a requirement, or when the results of informal preliminary testing will be used to demonstrate a particular requirement.

d. INSPECTION: (I)- Inspection does not use laboratory or special equipment. Rather, Inspection consists of nondestructive static-state examination of the hardware, source code, software documentation, and/or technical data and documentation.

6.2 VERIFICATION REQUIREMENTS TRACEABILITY MATRIX.

Appendices A and B provide a Verification Requirements Traceability Matrix (VRTM) for those requirements specified by NAS-SS-1000, Volume I and IV, applicable to recording equipment. These are listed under paragraphs 3.2.1.1.8.1, for Volume I, and 3.2.1.2.5, for Volume IV. This matrix defines the test level at which these parameters will be verified. Appendix C provides a VRTM for those requirements defined by the PD and similarly shows which parameters will be verified at the integration test level. The VRTMs were developed from the HCVR Master Test Plan (MTP) VRTM using the requirements from NAS-SS-1000 and the PD. System integration level testing will take place at designated FAA facilities and at the FAA Technical Center, Atlantic City International Airport, New Jersey.

6.3 CROSS REFERENCE MATRIX.

Appendices A and B provide cross-reference matrix listing the NAS-SS-1000 test requirements and how they relate to the PD and the test location where they will be verified. Appendix C lists the PD test requirements and the test location where they will be verified.

7. TEST PROCEDURES.

Test procedures were prepared by ACN-260 for all NAS integration tests to be conducted during OT&E. These procedures, in appendix D, provide the detail needed for execution of thorough integration testing and for transitioning the HCVR equipment into the NAS.

7.1 NAS SYSTEM PERFORMANCE TEST PROCEDURES.

Tests in this area will evaluate how well the HCVR equipment interfaces with a minimum set of NAS systems. Tests will be conducted using simulated data inputs generated by the Automated Test Equipment (ATE).

The ATE is a test set, with test equipment, which interfaces to the HCVR. The ATE performs monitoring and testing via a IEEE-488 bus controlled by software resident in the HP Vectra R/25C. A block diagram of the ATE is provided in figure 1. The OT&E test facility, located at the FAA Technical Center, will provide a test configuration for future testing.

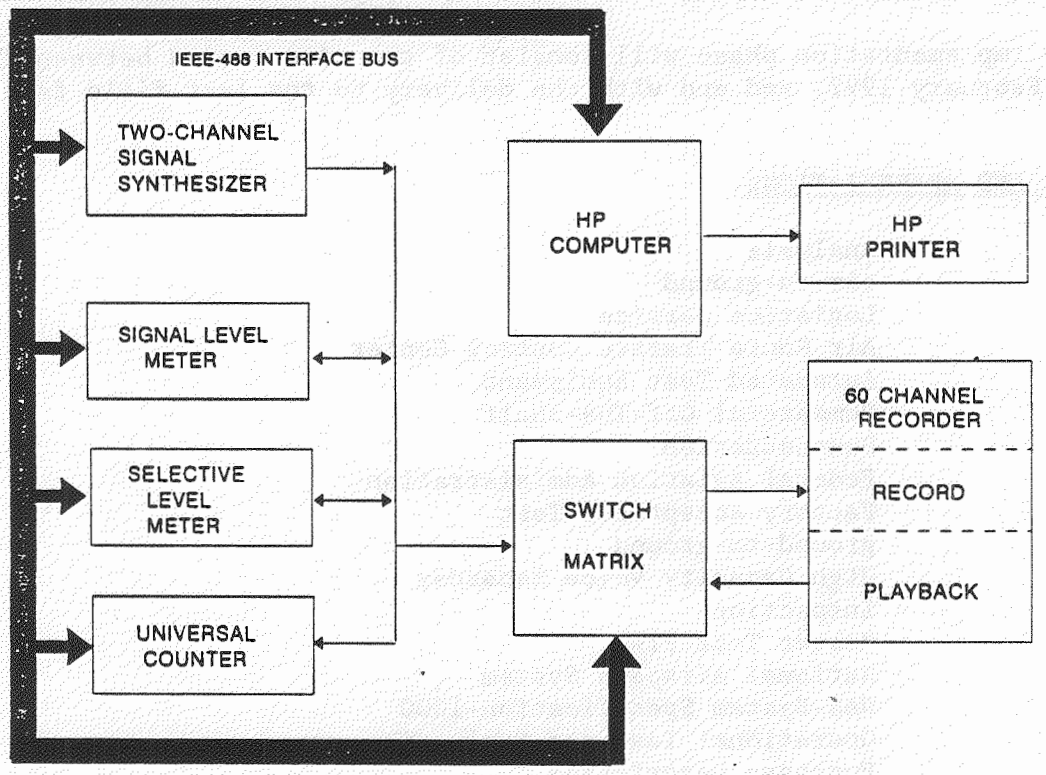

FIGURE 1. AUTOMATED TEST EQUIPMENT (ATE) TEST SET

7.2 NAS SYSTEM INTEGRATION TEST PROCEDURES.

This area of testing involves those systems that presently interface with the HCVR as described in section 5. Preliminary test procedures for these systems are in the process of being prepared for publication. Test procedures will also be written to verify Integration Level and System Level Requirements specified in NAS-SS-1000 and Integration Level Requirements specified in the PD. These requirements are listed in appendices A and B and test procedures will be provided at a later date.

8. SCHEDULE.

The following is a summary of the schedule milestones for the procurement of the 60-channel recorder/reproducer systems. All schedules are dynamic and subject to periodic revisions to reflect the current activity status.

a. The acquisition phase began with the procurement request submitted to the Logistics Service (ALG) in March 1990. The solicitation was issued in April 1991, and the contract was awarded in September 1991. The acquisition phase will conclude with the last delivery in October 1993.

b. The production phase will begin in October 1991, with the delivery of the first system to the FAA Technical Center in December 1991, and will continue until the last system is delivered to the last field facility.

c. The testing phase will begin in December 1991, with an approved Factory Acceptance Test (FAT) plan, and will end with the completion of the last FAT.

d. The implementation phase will consist of the time period between the first delivery in February 1992, and end with the delivery to the last field facility.

9. ACRONYMS AND ABBREVIATIONS.

A	Analysis
a-g	air-to-ground
ALG	Logistics Service
ARTCC	Air Route Traffic Control Center
ATE	Automated Test Equipment
COTS	Commercial Off-The-Shelf
D	Demonstration
FAA	Federal Aviation Administration
FAT	Factory Acceptance Test
g-g	ground-to-ground
HCVR	High Capacity Voice Recorder
I	Inspection
MTP	Master Test Plan
NAS	National Airspace System
NAS-SS-1000	NAS-System Specification-1000
OT&E	Operational Test and Evaluation
PD	Purchase Description
T	Test
TRACON	Terminal Radar Approach Control
VRTM	Verification Requirements Traceability Matrix

APPENDIX A

NAS-SS-1000 VOLUME I - CROSS REFERENCE TEST MATRIX

REF. PARAGRAPH	REQUIREMENT DESCRIPTION	PURCHASE DESCRIPTION	VERIFICATION METHOD	TEST LOCATIONS		NOTES
				FAATC	KEY SITE	
3.2.1.1.8.1.1.c	Data Comm. - NAS network shall provide, flexibility to enable growth for future data communications requirements		A			
3.2.1.1.8.1.1.d	Data Comm. - Independent emergency data comm. between ACF, ATCT, AFSS, ATCCC, maintenance facilities, regional offices.		D			
3.2.1.1.8.1.3	Data & voice archiving - The NAS shall provide data & voice recording & playback capability for archiving & reconstruction purposes.	3.3.1 3.3.2 3.4.1 3.4.1.6 3.4.17 3.4.18 3.4.21	A/D A/D A/D A/D A/D A/D A/D			
3.2.1.1.8.2	NAS Time Standard-The NAS shall provide a standard time signal for all NAS subsystems	--------	X			L.I.
3.2.1.1.8.2	NAS Time Standard-Means for synchronizing with a master time clock	3.3.25 3.3.25.1 3.3.25.2	A A A			

VERIFICATION Methods: T=TEST, D=DEMONSTRATION, A=ANALYSIS, I=INSPECTION, X=NOT APPLICABLE, LI=LEAD-IN

NOTES:

REF. PARAGRAPH	REQUIREMENT DESCRIPTION	PURCHASE DESCRIPTION	VERIFICATION METHOD	TEST LOCATIONS		NOTES
				FAATC	KEY SITE	
3.2.1.1.8.2.b	NAS time standard - Means for interfacing NAS subsystem having their own time standard and/or synchronization capabilities with other NAS subsystems requiring these capabilities.	same as above	A			
3.2.1.2.8.3	Data & voice archiving perform. characteristics- The NAS shall provide data and voice storage recording and playback capability for reconstruction purposes.	--------	X			L.I.
3.2.1.2.8.3.a	Record all specified operational voice and data information for support of analysis.	3.1 3.3.1 3.3.2 3.3.23.1 3.3.24.1 3.3.24.2 3.3.25	D D D D D D D			
3.2.1.2.8.3.b	Retrieve and playback all specified recorded data and voice information requested by an authorized specialist.	--------	X			L.I.

VERIFICATION Methods: T=TEST, D=DEMONSTRATION, A=ANALYSIS, I=INSPECTION, X=NOT APPLICABLE, LI=LEAD-IN

NOTES:

REF. PARAGRAPH	REQUIREMENT DESCRIPTION	PURCHASE DESCRIPTION	VERIFICATION METHOD	TEST LOCATIONS		NOTES
				FAATC	KEY SITE	
3.2.1.2.8.3.b.1	Voice recording retrieval within 30 minutes from on-line storage and within 60 minutes from off-line storage.	3.3.24.1 3.3.24.2 3.3.25 3.3.25.1 3.4.2.5 3.4.2.6	D D D D D D			
3.2.1.2.8.3.b.2	Data recordings retrievable from off-line storage		D			
3.2.1.2.8.3.c	Store all operational data and voice recordings in accordance with appropriate FAA procedures.	--------	X			L.I.
3.2.1.2.8.3.c.1	Voice transmission, 15 days min.		D/A			
3.2.1.2.8.3.c.2	Data information, 15 days min.		D/A			
3.2.1.2.8.4	NAS time standard performance characteristics.- The NAS shall provide a standard time signal.	--------	X			L.I.

VERIFICATION METHODS: T=TEST, D=DEMONSTRATION, A=ANALYSIS, I=INSPECTION, X=NOT APPLICABLE, LI=LEAD-IN

NOTES:

REF. PARAGRAPH	REQUIREMENT DESCRIPTION	PURCHASE DESCRIPTION	VERIFICATION METHOD	TEST LOCATIONS		NOTES
				FAATC	KEY SITE	
3.2.1.2.8.4.b	A system dealing with non-ATC functions shall be synchronized to within 6 seconds of UTC.		T			
3.2.1.2.8.4.c	The NAS shall provide interfacing capabilities to the coded time signal and synchronization in accordance with Vol. II-V of NAS-SS-1000.		D			

VERIFICATION METHODS: T=TEST, D=DEMONSTRATION, A=ANALYSIS, I=INSPECTION, X=NOT APPLICABLE, LI=LEAD-IN

NOTES:

APPENDIX B

NAS-SS-1000 VOLUME IV - CROSS REFERENCE TEST MATRIX

REF. PARAGRAPH	REQUIREMENT DESCRIPTION	PURCHASE DESCRIPTION	VERIFICATION METHOD	TEST LOCATIONS		NOTES
				FAATC	KEY SITE	
3.2.1.2.5	Recording Equipment-Multichannel recording equipment will provide the legal recording of voice comm. involving air traffic control activities. The recording equip. will consist of the record and reproduce systems, duplica. equip. and erasing equipment.	--------	X			L.I.
3.2.1.2.5.1	Functional characteristics - The recording equipment shall provide the following function:	--------	X			L.I.
3.2.1.2.5.1.1	Time - The recording equipment shall record time code that is synchronized with an external time source or its own CTS.	3.3.25.1	D			
3.2.1.2.5.1.2	Record & reproduce system - The record and reproduce system shall provide the following:	--------	X			L.I.

VERIFICATION METHODS: T=TEST, D=DEMONSTRATION, A=ANALYSIS, I=INSPECTION, X=NOT APPLICABLE, LI=LEAD-IN

NOTES:

REF. PARAGRAPH	REQUIREMENT DESCRIPTION	PURCHASE DESCRIPTION	VERIFICATION METHOD	TEST LOCATIONS		NOTES
				FAATC	KEY SITE	
3.2.1.2.5.1.2.1	Media sensor - Each recorder shall provide:	--------	X			L.I.
3.2.1.2.5.1.2.1.a	End of media sensor	3.3.6 3.3.10	D D			
3.2.1.2.5.1.2.1.b	Media failure sensor	same as above	D			
3.2.1.2.5.1.2.1.c	Adj. media remaining sensor		D			
3.2.1.2.5.1.2.2	Shutdown system - Each recorder shall be designed to stop automatically in the event of:	--------	X			L.I.
3.2.1.2.5.1.2.2.a	A power failure	3.3.6	D			
3.2.1.2.5.1.2.2.b	Media failure	3.3.6	D			
3.2.1.2.5.1.2.2.c	End-of-media detection	3.3.6 3.3.22	D D			

VERIFICATION METHODS: T=TEST, D=DEMONSTRATION, A=ANALYSIS, I=INSPECTION, X=NOT APPLICABLE, LI=LEAD-IN

NOTES:

REF. PARAGRAPH	REQUIREMENT DESCRIPTION	PURCHASE DESCRIPTION	VERIFICATION METHOD	TEST LOCATIONS		NOTES
				FAATC	KEY SITE	
3.2.1.2.5.1.3	Record system - The record system shall provide the following functions:	--------	X			L.I.
3.2.1.2.5.1.3.1	Dual recorders - The record system shall provide a:	--------	X			L.I.
3.2.1.2.5.1.3.1.a	Operating recorder;	3.3.1 3.3.1.1	D D			
3.2.1.2.5.1.3.1.b	Standby recorder	same as above	D			
3.2.1.2.5.1.3.2	Main/standby recorder switching - The record system shall auto. place the standby recorder into operat. when the following occurs	--------	X			L.I.
3.2.1.2.5.1.3.2.a	Media remaining on the operating recorder reaches the adjusted sensing point;		D			

VERIFICATION METHODS: T=TEST, D=DEMONSTRATION, A=ANALYSIS, I=INSPECTION, X=NOT APPLICABLE, LI=LEAD-IN

NOTES:

REF. PARAGRAPH	REQUIREMENT DESCRIPTION	PURCHASE DESCRIPTION	VERIFICATION METHOD	TEST LOCATIONS		NOTES
				FAATC	KEY SITE	
3.2.1.2.5.1.3.2.b	Media runs out;	3.3.22 3.3.23	D D			
3.2.1.2.5.1.3.2.c	Media fails;	3.3.22 3.3.23 3.3.23.2	D D D			
3.2.1.2.5.1.3.2.d	Failure of the media remaining sensor;		D			
3.2.1.2.5.1.3.2.e	Any condition that actuates the shutdown system;	3.3.22 3.3.23.2	D D			
3.2.1.2.5.1.3.2.f	Failure of the record function in the operating recorder.	3.3.22 3.3.23	D D			
3.2.1.2.5.1.3.3	Alarms - The following conditions shall cause an alarm to be generated:	--------	X			L.I.
3.2.1.2.5.1.3.3.a	Any of the conditions which cause main to standby recorder switching except when the media on the operating recorder reaches the adjusted sensing point;	3.3.23	D			

VERIFICATION METHODS: T=TEST, D=DEMONSTRATION, A=ANALYSIS, I=INSPECTION, X=NOT APPLICABLE, LI=LEAD-IN

NOTES:

REF. PARAGRAPH	REQUIREMENT DESCRIPTION	PURCHASE DESCRIPTION	VERIFICATION METHOD	TEST LOCATIONS		NOTES
				FAATC	KEY SITE	
3.2.1.2.5.1.3.3.b	Failure of any power supply module;	3.3.23	D			
3.2.1.2.5.1.3.3.c	Loss of time code signal recording;	3.3.23	D			
3.2.1.2.5.1.3.3.d	Record malfunction	3.3.23	D			
3.2.1.2.5.1.3.4	Channel monitor - Channel monitoring shall not interfere with normal operations.	3.3.23.1	D			
3.2.1.2.5.1.4	Reproduction - The reproduction system shall provide:	--------	X			L.I.
3.2.1.2.5.1.4.a	Playback of a single channel	3.4.1	D			
3.2.1.2.5.1.4.b	Playback of at least two channels simultaneously.	3.4.1.7	D			
3.2.1.2.5.1.5	Duplicating equipment - The media duplication equipment shall record & reproduce at least two selected channels.	3.4.1 3.4.1.7	D D			

VERIFICATION METHODS: T=TEST, D=DEMONSTRATION, A=ANALYSIS, I=INSPECTION, X=NOT APPLICABLE, LI=LEAD-IN

NOTES:

REF. PARAGRAPH	REQUIREMENT DESCRIPTION	PURCHASE DESCRIPTION	VERIFICATION METHOD	TEST LOCATIONS		NOTES
				FAATC	KEY SITE	
3.2.1.2.5.1.6	Erasing equipment - The erasing equipment shall provide for erasure of media.	3.4.4 3.4.4.1 3.4.4.4	D D D			
3.2.1.2.5.2	Performance characterisitcs - The recording equipment shall meet the following performance characteristics:	--------	X			L.I.
3.2.1.2.5.2.1	Record and reproduce system - The record and reproduce system shall meet the following performance characteristics:	--------	X			L.I.
3.2.1.2.5.2.1.1	Stop time - The system shall stop within 1 second after a stop command.	3.3.9	T			
3.2.1.2.5.2.1.2	Length of recording without changing media- A recording system shall record 24 hours before changing media.	3.3.1.1 3.3.2	T T			
3.2.1.2.5.2.2	Record system - The record system shall meet the following performance characteristics:	--------	X			L.I.

VERIFICATION METHODS: T=TEST, D=DEMONSTRATION, A=ANALYSIS, I=INSPECTION, X=NOT APPLICABLE, LI=LEAD-IN

NOTES:

REF. PARAGRAPH	REQUIREMENT DESCRIPTION	PURCHASE DESCRIPTION	VERIFICATION METHOD	TEST LOCATIONS		NOTES
				FAATC	KEY SITE	
3.2.1.2.5.2.2.1	Input levels - The record system shall record all audio signals with a dynamic range from -35 dBm to 0 dBm.	3.3.12	T			
3.2.1.2.5.2.2.2	Frequency response - The freq. response of each channel over the frequency range 300-3000 Hz shall not vary by more than 4 dB.	3.3.14	T			
3.2.1.2.5.2.2.3	Harmonic & intermodulation distortion- There shall be no distortion component greater than -34 dBm.	3.3.15	T			
3.2.1.2.5.2.2.4	Availability - The recording equipment shall meet an availability of .999.	3.5	A			
3.2.1.2.5.2.3	Reproduction - The reproduction system shall meet the following performance characteristics:	--------	X			L.I.
3.2.1.2.5.2.3.1	Frequency response - The freq. response of each channel over the frequency range 300-3000 Hz shall not vary more than 3 dB.	3.3.14	T			

VERIFICATION METHODS: T=TEST, D=DEMONSTRATION, A=ANALYSIS, I=INSPECTION, X=NOT APPLICABLE, LI=LEAD-IN

NOTES:

REF. PARAGRAPH	REQUIREMENT DESCRIPTION	PURCHASE DESCRIPTION	VERIFICATION METHOD	TEST LOCATIONS		NOTES
				FAATC	KEY SITE	
3.2.1.2.5.2.3.2	Harmonic and intermodulation distortion- There shall be no distortion component that is greater than -34 dBm.	3.3.15	T			
3.2.1.2.5.2.3.3	Noise - The noise in each channel shall be at least 35 dB below a 0 dBm 1000 Hz record channel signal level.	3.3.16	T			
3.2.1.2.5.2.3.4	Crosstalk - No crosstalk signal component shall have an output level greater than -35 dBm at the repro. system monitor output.	3.3.17	T			
3.2.1.2.5.2.3.5	Hum distortion - The hum distortion produced in each channel shall not exceed -35 dBm with an input level of -15 dBm at 1000 Hz to the channel and an output level of 0 dBm at the reproduce system monitor output.	3.3.18	T			

VERIFICATION METHODS: T=TEST, D=DEMONSTRATION, A=ANALYSIS, I=INSPECTION, X=NOT APPLICABLE, LI=LEAD-IN

NOTES:

REF. PARAGRAPH	REQUIREMENT DESCRIPTION	PURCHASE DESCRIPTION	VERIFICATION METHOD	TEST LOCATIONS		NOTES
				FAATC	KEY SITE	
3.2.1.2.5.2.4	Duplicating equipment - The media duplicating equipment shall meet the following perfr. charteristic	--------	X			L.I.
3.2.1.2.5.2.4.1	Frequency response - The freq. response of each channel over the range 300-3000 Hz shall not vary by more than 4 dB.	3.3.14	T			
3.2.1.2.5.2.4.2	Crosstalk - The crosstalk in each channel shall be at least 35 dB below the channel signal level.	3.3.17	T			
3.2.1.2.5.2.4.3	Noise - The noise in each channel shall be at least 50 dB below the channel signal level.	3.3.16	T			
3.2.1.2.5.2.4.4	Harmonic distortion - There shall be no distortion component greater than -34 dBm.	3.3.15	T			
3.2.1.2.5.2.4.5	Hum distortion - The hum distortion produced in each channel shall be at least 35 dB below signal level.	3.3.18	T			
3.2.1.2.5.2.5	Erasing equip. - The total erasure time shall not exceed 50 seconds.	3.4.4.4	T			

VERIFICATION METHODS: T=TEST, D=DEMONSTRATION, A=ANALYSIS, I=INSPECTION, X=NOT APPLICABLE, LI=LEAD-IN

NOTES:

APPENDIX C

PURCHASE DESCRIPTION - VERIFICATION REQUIREMENTS TRACEABILITY MATRIX

PARAGRAPH NO.	REQUIREMENT DESCRIPTION	VERIFICATION METHOD		CROSS REFERENCE TEST LOCATION		NOTES
		UNIT LEVEL	INTEG LEVEL	FAATC	KEY SITE	
3.3.1	TRANSPORTS	A	A			
3.3.1.1	OPERATION	D	D			
3.3.1.2	FEATURES	D	D			
3.3.2	RECORD CAPACITY	D	D			
3.3.3	MODULE ISOLATION	D	D			
3.3.4	TAPE SPEED	T	T			
3.3.5.1	TAPE - PHYSICAL PROPERTIES	A	A			
3.3.5.2	TAPE - MAGNETIC PROPERTIES	A	A			
3.3.5.3	TAPE - ELECTROMAGNETIC PROPERTIES	A	A			
3.3.6	BRAKING SYSTEM	D	D			
3.3.7	FAST - FORWARD/REWIND TIME	T	T			
3.3.8	START TIME	T	T			
3.3.9	STOP TIME	T	T			
3.3.10	TRANSPORT SENSORS	D	D			
3.3.11	DUAL ELECTRONIC PACKAGE	D	D			
3.3.12	INPUT LEVELS	T	T			
3.3.13	INPUT IMPEDANCE	A	A			
3.3.14	FREQUENCY RESPONSE	T	T			

VERIFICATION METHODS: T=TEST, D=DEMONSTRATION, A=ANALYSIS, I=INSPECTION, X=NOT APPLICABLE, LI=LEAD-IN

NOTES:
P = PASSED, MEETS REQUIREMENT WITHOUT COMMENT

PARAGRAPH NO.	REQUIREMENT DESCRIPTION	VERIFICATION METHOD		CROSS REFERENCE TEST LOCATION		NOTES
		UNIT LEVEL	INTEG LEVEL	FAATC	KEY SITE	
3.3.15	HARMONIC/INTERMODULATION DISTORTION	T	T			
3.3.16	SIGNAL TO NOISE	T	T			
3.3.17	CROSSTALK	T	T			
3.3.18	HUM DISTORTION	T	T			
3.3.19	RECORD AMPLIFIER	A	A			
3.3.20	HEAD ASSEMBLY	D	X			
3.3.21	POWER SUPPLY SYSTEM	T	T			
3.3.21.1	DUAL POWER SUPPLY	A	A			
3.3.21.2	POWER SUPPLY - CIRCUIT BRKS.	A	X			
3.3.21.3	BATTERY BACKUP	D	D			
3.3.22	SWITCHING CIRCUITRY	D	D			
3.3.23	MONITOR AND ALARM	D	D			
3.3.23.1	CHANNEL MONITOR	D	D			
3.3.23.2	REMOTE INDICATOR	D	D			
3.3.24.1	TAPE SEARCH AUTOMATIC	D	D			
3.3.24.2	TAPE SEARCH MANUAL	D	D			
3.3.25	TIME/DATE GENERATOR	D	D			
3.3.25.1	DIGITAL TIME CODE	D	D			
3.3.25.2	AUXILIARY TIME SIGNAL OUTPUT	T	T			

VERIFICATION METHODS: T=TEST, D=DEMONSTRATION, A=ANALYSIS, I=INSPECTION, X=NOT APPLICABLE, LI=LEAD-IN

NOTES:
P = PASSED, MEETS REQUIREMENT WITHOUT COMMENT

PARAGRAPH NO.	REQUIREMENT DESCRIPTION	VERIFICATION METHOD		CROSS REFERENCE TEST LOCATION		NOTES
		UNIT LEVEL	INTEG LEVEL	FAATC	KEY SITE	
3.3.26	DESIGN AND CONSTRUCTION	A	A			
3.3.26.1	RECORDER/REPRODUCER CABINET	A	A			
3.3.26.2	ACCESSIBILITY	A	A			
3.3.26.3.1	POWER CABLES	A	A			
3.3.26.3.2	AUDIO CABLES	A	A			
3.3.26.4	CHASSIS EQUIPMENT	A	A			
3.3.26.5	SERVICE LIFE	A	X			
3.3.26.6	INTERFERENCE	A	A/T			
3.3.26.7	WARMUP TIME	D	D			
3.3.27	REMOTE INDICATOR	D	X			
3.3.27.1	DESIGN AND CONSTRUCTION	A	X			
3.3.27.2	VISUAL INDICATORS	D	D			
3.3.27.3	AURAL ALARM	D	D			
3.3.27.4	POWER REQUIREMENTS	D	D			
3.4	PORTABLE REPRODUCER SYSTEM	X	X			
3.4.1	PORTABLE REPRODUCER UNIT	D	D			
3.4.1.1	DESIGN AND CONSTRUCTION	A/D	X			
3.4.1.2	TAPE DECK	D	X			
3.4.1.3	TAPE HEAD ASSEMBLIES	A/D	X			

VERIFICATION METHODS: T=TEST, D=DEMONSTRATION, A=ANALYSIS, I=INSPECTION, X=NOT APPLICABLE, LI=LEAD-IN

NOTES:
P = PASSED, MEETS REQUIREMENT WITHOUT COMMENT

PARAGRAPH NO.	REQUIREMENT DESCRIPTION	VERIFICATION METHOD		CROSS REFERENCE TEST LOCATION		NOTES
		UNIT LEVEL	INTEG LEVEL	FAATC	KEY SITE	
3.4.1.4	ELECTRONIC CIRCUITS	A/D	X			
3.4.1.5	FOOT CONTROL ASSEMBLY	A/D	A/D			
3.4.1.6	EARPHONE JACK	D	D			
3.4.1.7	TWO CHANNEL CASSETTE RECORDER	D	D			
3.4.1.8	AUDIO OUTPUT JACK	D/T	D/T			
3.4.1.9	AUDIO TIME JACK	D/T	D/T			
3.4.2.1	OPERATION	D	X			
3.4.2.2	FEATURES	D	D			
3.4.2.3	METERS	D	D			
3.4.2.4	REWIND OPERATION	D/T	D/T			
3.4.2.5	MANUAL SEARCH	D	D			
3.4.2.6	AUTO SEARCH	D	D			
3.4.2.7	TYPE FORMAT	A	A			
3.4.2.8	RECORD FUNCTION	D	D			
3.4.2.9	AGC	A	X			
3.4.2.10	STOP FUNCTION	D	D			
3.4.2.11	TIME FUNCTION	D	D			
3.4.3	POWER REQUIREMENTS	T	T			
3.4.4	TAPE DEGAUSSER UNIT	D	D			
3.4.4.1	TAPE CONDITIONING	D/T	D/T			

VERIFICATION METHODS: T=TEST, D=DEMONSTRATION, A=ANALYSIS, I=INSPECTION, X=NOT APPLICABLE, LI=LEAD-IN

NOTES:
P = PASSED, MEETS REQUIREMENT WITHOUT COMMENT

PARAGRAPH NO.	REQUIREMENT DESCRIPTION	VERIFICATION METHOD		CROSS REFERENCE TEST LOCATION		NOTES
		UNIT LEVEL	INTEG LEVEL	FAATC	KEY SITE	
3.4.4.2	TAPE REELS	D	X			
3.4.4.3	AUTOMATIC OPERATION	D	D			
3.4.4.4	DEGAUSSER CYCLE	D/T	D/T			
3.4.4.5	POWER REQUIREMENTS	T	T			
3.4.4.6	PHYSICAL CHARACTERISTICS	A	X			
3.5	MAINTAINABILITY AND RELIABILITY	A	A			
3.6	TEST TAPE	X	X			

VERIFICATION METHODS: T=TEST, D=DEMONSTRATION, A=ANALYSIS, I=INSPECTION, X=NOT APPLICABLE, LI=LEAD-IN

NOTES:
P = PASSED, MEETS REQUIREMENT WITHOUT COMMENT

APPENDIX D

TEST PROCEDURES

FAA TECHNICAL CENTER TESTS

INTRODUCTION.

The following tests have been generated at the Federal Aviation Administration (FAA) Technical Center to support testing of the High Capacity Voice Recorder (HCVR). These tests are to be performed using the Automated Test Equipment (ATE), located at the FAA Technical Center, Atlantic City International Airport, NJ.

1. SYSTEM LEVEL TESTS PURCHASE DESCRIPTION ((PD) PARAGRAPH 4.2.1)).

Conduct the following tests under the normal conditions listed below.

Alternating current (AC) line voltage, 120 +/- 5 volts (v), single phase
AC line frequency, 60 hertz (Hz) +/- 0.5 Hz
Temperature, +30° C +/- 10° C

1.1 RECORDER/REPRODUCER SYSTEM.

1.1.1 Harmonic Distortion (PD paragraph 3.3.15).

a. Connect the recorder AC power line to the variable transformer.

b. Set the variable transformer to 120V.

c. Load a blank tape on transport A.

d. Place transport A in RECORD.

e. Monitor the playback on any channel on transport A.

f. Apply an input signal of 400 Hz at -10 decibels above 1 milliwatt (dBm) to any channel using the signal generator.

g. Connect the selective level meter to the record system.

h. Set the selective level meter to 800 Hz (2nd harmonic) and verify the harmonic distortion is no greater than 3 percent.

i. Repeat step h for 1200 Hz (3rd harmonic).

j. Repeat steps c through i for transport B.

TRANSPORT A

CHANNEL ____
2ND ORDER DISTORTION PASS_____ FAIL_____
3RD ORDER DISTORTION PASS_____ FAIL_____

TRANSPORT B

CHANNEL ____
2ND ORDER DISTORTION PASS_____ FAIL_____
3RD ORDER DISTORTION PASS_____ FAIL_____

1.1.2 Intermodulation Distortion (PD paragraph 3.3.15).

a. Set the variable transformer to 120V.

b. Load a blank tape on transport A.

c. Place transport A in RECORD.

d. Monitor the playback on any channel on transport A.

e. Apply two input signals (1000 Hz at -10 dBm and 1450 Hz at -10 dBm) to any channel using the signal generator.

f. Connect the selective level meter to the record system.

g. Set the selective level meter to 2450 Hz (second order distortion) and verify the intermodulation distortion is no greater than 3 percent.

h. Repeat step g for 450 Hz (second order distortion), 3900 Hz (third order distortion), 3450 Hz (third order distortion), 1900 Hz (third order distortion), 550 Hz (third order distortion).

i. Repeat steps b through h for transport B.

TRANSPORT A

CHANNEL ____

2ND ORDER DISTORTION PASS_____ FAIL_____

3RD ORDER DISTORTION PASS_____ FAIL_____

TRANSPORT B

CHANNEL ____

2ND ORDER DISTORTION PASS_____ FAIL_____

3RD ORDER DISTORTION PASS_____ FAIL_____

1.1.3 Hum Distortion (FAA-E-2863 paragraph 3.3.18).

a. Set the variable transformer to 120V.

b. Load a blank tape on transport A.

c. Place transport A in RECORD.

d. Monitor the playback on any channel on transport A.

e. Apply an input signal (1000 Hz at -15 dBm) to any channel using the signal generator.

f. Connect the selective level meter to the record system.

g. Monitor the playback on any channel.

h. Note the signal output level (dBm) on the selective level meter.

i. Advance the hum distortion test tape to blank section.

j. Note the residual noise level (dBm) on the selective level meter.

k. Verify the hum distortion (the decibel (dB) difference between the two levels) is at least 35 dB below the signal output level.

l. Repeat steps b through k for transport B.

	A	B
PASS	___	___
FAIL	___	___
CHA	___	___

1.1.4 Crosstalk (PD paragraph 3.3.17).

a. Set the variable transformer to 120V.

b. Load a blank tape on transport A.

c. Place transport A in RECORD.

d. Monitor the playback on transport A.

e. Apply an input signal of 1004 Hz at -10 dBm to channel 1 using the signal generator.

f. Connect the selective level meter to the record system.

g. Set the selective level meter to 1004 Hz.

h. Select all adjacent channels and verify the crosstalk is at least 35 dB below the channel signal level.

i. Repeat steps e through h for all channels.

j. Repeat steps b through i for transport B.

TRANSPORT A

	105 VOLTS						130 VOLTS					
CHA	CHA	(dB)	CHA	(dB)	CHA	(dB)	CHA	(dB)	CHA	(dB)	CHA	(dB)
1												
2												
3												
4												
5												
6												
7												
8												
9												
10												
11												
12												
13												
14												
15												
16												
17												
18												
19												
20												
21												
22												
23												
24												
25												

Table continued

26												
27												
28												
29												
30												
31												
32												
33												
34												
35												
36												
37												
38												
39												
40												
41												
42												
43												
44												
45												
46												
47												
48												
49												
50												
51												

Table continued

52												
53												
54												
55												
56												
57												
58												
59												
60												

TRANSPORT B

	105 VOLTS						130 VOLTS					
CHA	CHA	(dB)	CHA	(dB)	CHA	(dB)	CHA	(dB)	CHA	(dB)	CHA	(dB)
1												
2												
3												
4												
5												
6												
7												
8												
9												
10												
11												
12												
13												
14												
15												

Table continued

16												
17												
18												
19												
20												
21												
22												
23												
24												
25												
26												
27												
28												
29												
30												
31												
32												
33												
34												
35												
36												
37												
38												
39												
40												
41												

Table continued

42												
43												
44												
45												
46												
47												
48												
49												
50												
51												
52												
53												
54												
55												
56												
57												
58												
59												
60												

1.1.5 Signal-To-Noise (PD paragraph 3.3.16).

a. Set the variable transformer to 120V.

b. Load a blank tape on transport A.

c. Place transport A in RECORD.

d. Monitor the playback on transport A.

e. Apply an input signal of 1000 Hz at 0 dBm to any channel using the signal generator.

f. Connect the selective level meter to the record system.

g. Set the selective level meter to 1000 Hz.

h. Note the signal output level (dBm) on the selective level meter.

i. Remove the input signal from the channel.

j. Note the residual noise level (dBm) on the selective level meter.

k. Verify the noise level is at least 35 dB below the signal output level.

l. Repeat steps b through k for transport B.

	A	B
CHA	___	___
PASS	___	___
FAIL	___	___

1.1.6 Input Levels (PD paragraph 3.3.12).

a. Connect the recorder system AC power line to the variable transformer.

b. Set the variable transformer to 120V.

c. Turn "on" the electronic package panel.

d. Load a blank tape on the transport.

e. Place the transport in RECORD.

f. Apply an input signal of 1000 Hz at 0 dBm to channel 1 using the signal generator.

g. Monitor the playback on channel 1.

h. Verify the recorded signal on channel 1 by turning up the speaker volume and observing the volume unit (VU) meter.

i. Repeat steps f through g for all channels.

j. Apply an input signal of 1000 Hz at -15 dBm to channel 1 using the signal generator.

k. Verify the recorded signal on channel 1 by turning up the speaker volume and observing the VU meter.

l. Repeat steps i through k for all channels.

m. Apply a signal of 1000 Hz at -35 dBm to channel 1 using the signal generator.

n. Verify the recorded signal on channel 1 by turning up the speaker volume and observing the VU meter.

o. Repeat steps l through n for all channels.

p. Repeat steps e through o for transport B.

TRANSPORT A (Pass/Fail)

CHA.	0 dBm	-15 dBm	-35 dBm	CHA.	0 dBm	-15 dBm	-35 dBm
1	____	____	____	31	____	____	____
2	____	____	____	32	____	____	____
3	____	____	____	33	____	____	____
4	____	____	____	34	____	____	____
5	____	____	____	35	____	____	____
6	____	____	____	36	____	____	____
7	____	____	____	37	____	____	____
8	____	____	____	38	____	____	____
9	____	____	____	39	____	____	____
10	____	____	____	40	____	____	____
11	____	____	____	41	____	____	____
12	____	____	____	42	____	____	____
13	____	____	____	43	____	____	____

Table continued

14	____	____	____	44	____	____	____
15	____	____	____	45	____	____	____
16	____	____	____	46	____	____	____
17	____	____	____	47	____	____	____
18	____	____	____	48	____	____	____
19	____	____	____	49	____	____	____
20	____	____	____	50	____	____	____
21	____	____	____	51	____	____	____
22	____	____	____	52	____	____	____
23	____	____	____	53	____	____	____
24	____	____	____	54	____	____	____
25	____	____	____	55	____	____	____
26	____	____	____	56	____	____	____
27	____	____	____	57	____	____	____
28	____	____	____	58	____	____	____
29	____	____	____	59	____	____	____
30	____	____	____	60	____	____	____

TRANSPORT B (Pass/Fail)

CHA.	0 dBm	-15 dBm	-35 dBm	CHA.	0 dBm	-15 dBm	-35 dBm
1	____	____	____	31	____	____	____
2	____	____	____	32	____	____	____
3	____	____	____	33	____	____	____
4	____	____	____	34	____	____	____
5	____	____	____	35	____	____	____
6	____	____	____	36	____	____	____

Table continued

7	____	____	____	37	____	____	____
8	____	____	____	38	____	____	____
9	____	____	____	39	____	____	____
10	____	____	____	40	____	____	____
11	____	____	____	41	____	____	____
12	____	____	____	42	____	____	____
13	____	____	____	43	____	____	____
14	____	____	____	44	____	____	____
15	____	____	____	45	____	____	____
16	____	____	____	46	____	____	____
17	____	____	____	47	____	____	____
18	____	____	____	48	____	____	____
19	____	____	____	49	____	____	____
20	____	____	____	50	____	____	____
21	____	____	____	51	____	____	____
22	____	____	____	52	____	____	____
23	____	____	____	53	____	____	____
24	____	____	____	54	____	____	____
25	____	____	____	55	____	____	____
26	____	____	____	56	____	____	____
27	____	____	____	57	____	____	____
28	____	____	____	58	____	____	____
29	____	____	____	59	____	____	____
30	____	____	____	60	____	____	____

1.1.7 Transport Sensors (PD paragraph 3.3.10).

a. Visually inspect and verify each transport is equipped with a motion sensor, end of tape sensor, and a broken tape sensor.

	A	B
PASS	___	___
FAIL	___	___

b. Connect the recorder AC power line to the variable transformer.

c. Set the variable transformer to 120V.

d. Place transport A in RECORD.

e. Verify the tape sensors do not make mechanical contact with the oxide surface of the tape.

	A	B
PASS	___	___
FAIL	___	___

f. Repeat steps d and e for transport B.

	A	B
PASS	___	___
FAIL	___	___

1.1.8 Braking System (PD paragraph 3.3.6).

a. Set the variable transformer to 120V .

b. Load a tape on transport A.

c. Place transport A in RECORD.

d. Disconnect the AC power line to the recorder.

e. Verify the transport braking system is automatically actuated.

	A	B
PASS	___	___
FAIL	___	___

f. Reconnect the AC power line to the recorder.

g. Place transport A in RECORD.

h. Lower the lifters of transport A and pull the tape away from the tape break sensor.

i. Verify the transport braking system is automatically actuated.

	A	B
PASS	___	___
FAIL	___	___

j. Place transport A in RECORD.

k. FAST FORWARD transport A near the end of the tape.

l. Place transport A in STOP.

m. Place transport A in RECORD.

n. Verify the transport braking system is automatically actuated at end-of-tape.

	A	B
PASS	___	___
FAIL	___	___

o. Repeat steps b through n for transport B.

1.1.9 Switching Circuitry (PD paragraph 3.3.22).

a. Set the variable transformer to 120V.

b. Load a tape on both transports.

c. Place transport A in RECORD.

d. Place transport B in READY.

e. Enter the desired transfer time.

f. Engage the transfer function.

g. Verify all record functions transfer to transport B at the desired time.

h. Place transport B in RECORD.

i. Place transport A in READY.

j. Repeat steps e through g.

	A	B
PASS	___	___
FAIL	___	___

1.1.10 Start Time (PD paragraph 3.3.8).

a. Set the variable transformer to 120V.

b. Load a tape on transport A.

c. Place transport A in RECORD.

d. Verify the start time is less than 0.5 seconds to stable speed.

e. Repeat steps b through d for transport B.

	A	B
PASS	___	___
FAIL	___	___

1.1.11 Stop Time (PD paragrah 3.3.9).

a. Set the variable transformer to 120V.

b. Load a tape on transport A.

c. Place transport A in RECORD.

d. Place transport A in STOP and verify the stop time is less than 1 second.

	A	B
PASS	___	___
FAIL	___	___

e. Repeat steps b through e for transport B.

	A	B
PASS	___	___
FAIL	___	___

1.1.12 Monitor and Alarm (PD paragraph 3.3.23).

1.1.12.1 Tape Breakage

a. Set the variable transformer to 120V.

b. Load a tape on both transports.

c. Place transport A in RECORD and transport B in READY.

d. Lower the lifters of transport A and pull the tape away from the tape break sensor.

e. Verify the system activates an aural and visual alarm and transport A functions transfer to transport B.

f. Place transport B in RECORD and transport A in READY.

g. Repeat steps d and e for transport B.

TRANSPORT A

	105 VOLTS		130 VOLTS	
	AURAL	VISUAL	AURAL	VISUAL
PASS	_____	_____	_____	_____
FAIL	_____	_____	_____	_____

TRANSPORT B

	105 VOLTS		130 VOLTS	
	AURAL	VISUAL	AURAL	VISUAL
PASS	_____	_____	_____	_____
FAIL	_____	_____	_____	_____

1.1.12.2 Tape Stoppage.

a. Set the variable transformer to 120V.

b. Load a tape on both transports.

c. Place transport A in RECORD and transport B in READY.

d. Disable the tape motion sensor on transport A.

e. Verify the system activates an aural and visual alarm and transport A functions transfer to transport B.

f. Enable the tape motion sensor on transport A.

g. Place transport B in RECORD and transport A in READY.

h. Repeat steps d and f for transport B.

TRANSPORT A

	105 VOLTS		130 VOLTS	
	AURAL	VISUAL	AURAL	VISUAL
PASS	_____	_____	_____	_____
FAIL	_____	_____	_____	_____

TRANSPORT B

	105 VOLTS		130 VOLTS	
	AURAL	VISUAL	AURAL	VISUAL
PASS	_____	_____	_____	_____
FAIL	_____	_____	_____	_____

1.1.12.3 Supply Reel Runs Out Of Tape.

a. Set the variable transformer to 120V.

b. Load a tape on both transports.

c. Place transport A in RECORD and transport B in READY.

d. FAST FORWARD transport A near the end of the tape.

e. Place transport A in STOP.

f. Place transport A in RECORD.

g. Verify the system activates an aural and visual alarm and transport A functions transfer to transport B when the tape runs out.

h. Place transport B in RECORD and transport A in READY.

i. Repeat steps d through g for transport B.

TRANSPORT A

	105 VOLTS		130 VOLTS	
	AURAL	VISUAL	AURAL	VISUAL
PASS	_____	_____	_____	_____
FAIL	_____	_____	_____	_____

TRANSPORT B

	105 VOLTS		130 VOLTS	
	AURAL	VISUAL	AURAL	VISUAL
PASS	_____	_____	_____	_____
FAIL	_____	_____	_____	_____

1.1.12.4 Failure Of Any Record Channel Circuitry.

a. Set the variable transformer to 120V.

b. Load a tape on both transports.

c. Place transport A in RECORD.

d. Place transport B in READY.

e. Fail any record channel circuitry.

f. Verify the system activates an aural and visual alarm and transport A functions transfer to transport B.

g. Repeat steps c through f for transport B.

TRANSPORT A

	105 VOLTS		130 VOLTS	
	AURAL	VISUAL	AURAL	VISUAL
PASS	_____	_____	_____	_____
FAIL	_____	_____	_____	_____

TRANSPORT B

	105 VOLTS		130 VOLTS	
	AURAL	VISUAL	AURAL	VISUAL
PASS	_____	_____	_____	_____
FAIL	_____	_____	_____	_____

1.1.12.5 Failure Of Any Power Supply Module.

a. Set the variable transformer to 120V.
b. Disable the operating power supply module.
c. Verify the system activated an aural and visual alarm.
d. Enable the operating power supply module.
e. Verify the alarms return to normal (no alarm) condition.

---

	105 VOLTS		130 VOLTS	
	AURAL	VISUAL	AURAL	VISUAL
PASS	_____	_____	_____	_____
FAIL	_____	_____	_____	_____

1.1.12.6 Loss Of Digital Time Code Recorded On The Tape.

a. Set the variable transformer to 120V.

b. Load a tape on transport A.

c. Place transport A in RECORD.

d. Disconnect the AC power to the time/date generator/reader assembly.

e. Verify the system activated an aural and visual alarm.

f. Reconnect the AC power and verify the alarms return to normal (no alarm) condition.

	105 VOLTS		130 VOLTS	
	AURAL	VISUAL	AURAL	VISUAL
PASS	_____	_____	_____	_____
FAIL	_____	_____	_____	_____

1.1.13 Channel Monitor (PD paragraph 3.3.23.1).

a. Set the variable transformer to 120v.

b. Load a blank tape on transport A.

c. Apply an input signal of 1000 Hz at -10 dBm to channel 1 using the signal generator.

d. Place transport A in RECORD.

e. Monitor the recorded signal using the speaker, VU meter, and headset and verify the system permits manual monitoring without interrupting normal operation.

f. Repeat steps c through e for all channels.

g. Repeat steps b through f for transport B.

	TRANSPORT			TRANSPORT	
CHA	A	B	CHA	A	B
1	___	___	31	___	___
2	___	___	32	___	___
3	___	___	33	___	___
4	___	___	34	___	___
5	___	___	35	___	___
6	___	___	36	___	___
7	___	___	37	___	___
8	___	___	38	___	___
9	___	___	39	___	___
10	___	___	40	___	___

Table continued

11	___	___	41	___	___
12	___	___	42	___	___
13	___	___	43	___	___
14	___	___	44	___	___
15	___	___	45	___	___
16	___	___	46	___	___
17	___	___	47	___	___
18	___	___	48	___	___
19	___	___	49	___	___
20	___	___	50	___	___
21	___	___	51	___	___
22	___	___	52	___	___
23	___	___	53	___	___
24	___	___	54	___	___
25	___	___	55	___	___
26	___	___	56	___	___
27	___	___	57	___	___
28	___	___	58	___	___
29	___	___	59	___	___
30	___	___	60	___	___

1.1.14 Dual Power Supply (PD paragraph 3.3.21.1).

a. Set the variable transformer to 120V.

b. Place both transports in RECORD.

c. Disable and remove the operating power supply.

d. Verify the alternate power supply automatically provides power to both transports.

PASS_____
FAIL_____

1.2 Portable Reproducer.

1.2.1 Crosstalk (PD paragraph 3.3.17).

a. Connect the portable reproducer AC power line to the variable transformer.

b. Set the variable transformer to 120V.

c. Load a crosstalk test tape (1000 Hz at -10 dBm) on the transport.

d. Place the transport in PLAY.

e. Monitor channel 1.

f. Connect the selective level meter to the reproducer system.

g. Set the selective level meter to 1004 Hz.

h. Select all other channels one at a time and verify the crosstalk is at least 35 dB below the channel signal level.

i. repeat steps e through h for all channels.

CHA	CHA (dB)		CHA (dB)		CHA (dB)	
1	___	___	___	___	___	___
2	___	___	___	___	___	___
3	___	___	___	___	___	___
4	___	___	___	___	___	___
5	___	___	___	___	___	___
6	___	___	___	___	___	___

Table continued

7						
8						
9						
10						
11						
12						
13						
14						
15						
16						
17						
18						
19						
20						
21						
22						
23						
24						
25						
26						
27						
28						
29						
30						
31						
32						

Table continued

33	___	___	___	___	___	___
34	___	___	___	___	___	___
35	___	___	___	___	___	___
36	___	___	___	___	___	___
37	___	___	___	___	___	___
38	___	___	___	___	___	___
39	___	___	___	___	___	___
40	___	___	___	___	___	___
41	___	___	___	___	___	___
42	___	___	___	___	___	___
43	___	___	___	___	___	___
44	___	___	___	___	___	___
45	___	___	___	___	___	___
46	___	___	___	___	___	___
47	___	___	___	___	___	___
48	___	___	___	___	___	___
49	___	___	___	___	___	___
50	___	___	___	___	___	___
51	___	___	___	___	___	___
52	___	___	___	___	___	___
53	___	___	___	___	___	___
54	___	___	___	___	___	___
55	___	___	___	___	___	___
56	___	___	___	___	___	___

Table continued

57	___	___	___	___	___	___
58	___	___	___	___	___	___
59	___	___	___	___	___	___
60	___	___	___	___	___	___

1.2.2 Signal-To-Noise (PD paragraph 3.3.16).

a. Set the variable transformer to 120V.

b. Load a signal-to-noise test tape (1000 Hz at 0 dBm) on the transport.

c. Place the transport in PLAY.

d. Monitor playback on any channel.

e. Connect the selective level meter to the reproducer system.

f. Set the selective level meter to 1000 Hz.

g. Note the signal output level (dBm) on the selective level meter.

h. Advance the test tape to blank section.

i. Note the residual noise level (dBm) on the selective level meter.

j. Verify the noise level is at least 35 dB below the signal output level.

CHA _____
PASS_____
FAIL_____

1.3 Tape Degausser.

1.3.1 Degausser Cycle (PD paragraph 3.4.4.4).

a. Connect the tape degausser AC power line to the variable transformer.

b. Set the variable transformer to 120V.

c. Load a pre-recorded tape in the degausser unit.

d. Start the degausser cycle and verify it is initiated by a single actuation of a switch.

PASS_____
FAIL_____

e. Verify the total degaussing time does not exceed 50 seconds.

PASS_____
FAIL_____
TIME_____

f. Visually inspect and verify the end of the automatic degausser cycle is indicated by an illuminated lamp.

PASS_____
FAIL_____

DOT/FAA CT-TN 91/55, Bell, Wayne E., High capacity voice recorder (HCVR) operational test and evaluation (OT&E) integration test plan, C. 2, ACT Library, 00020625